UNCLASSIFIED

PA 44,554

Defense Documentation Center

Defense Supply Agency

Cameron Station • Alexandria, Virginia

UNCLASSIFIED

12-17-74
DDC

1 OF 2

AD

785581

AD-785 581

ANALYSIS OF UNMANNED, TETHERED, ROTARY-WING PLATFORMS

Lawrence H. McNeill, et al

Kaman Aerospace Corporation

Prepared for:

Army Air Mobility Research and Development Laboratory

July 1974

DISTRIBUTED BY:

NTIS

National Technical Information Service
U. S. DEPARTMENT OF COMMERCE
5285 Port Royal Road, Springfield Va. 22151

Unclassified

SECURITY CLASSIFICATION OF THIS PAGE (When Data Entered)

REPORT DOCUMENTATION PAGE

READ INSTRUCTIONS BEFORE COMPLETING FORM

1. REPORT NUMBER: USAAMRDL TR-74-56
2. GOVT ACCESSION NO.:
3. RECIPIENT'S CATALOG NUMBER: AD-785 581

4. TITLE (and Subtitle): ANALYSIS OF UNMANNED, TETHERED, ROTARY-WING PLATFORMS

5. TYPE OF REPORT & PERIOD COVERED: Final Technical Report, Aug 1973 - April 1974

6. PERFORMING ORG. REPORT NUMBER: R-1259

7. AUTHOR(S): Lawrence H. McNeill, David Pinke, William E. Blackburn

8. CONTRACT OR GRANT NUMBER(S): DAAJ02-74-C-0008

9. PERFORMING ORGANIZATION NAME AND ADDRESS: Kaman Aerospace Corporation, Old Windsor Road, Bloomfield, Conn. 06002

10. PROGRAM ELEMENT, PROJECT, TASK AREA & WORK UNIT NUMBERS: 6920000-74006

11. CONTROLLING OFFICE NAME AND ADDRESS: Eustis Directorate, U.S. Army Air Mobility R&D Laboratory, Fort Eustis, Va. 23604

12. REPORT DATE: July 1974

13. NUMBER OF PAGES: 182

14. MONITORING AGENCY NAME & ADDRESS (if different from Controlling Office):

15. SECURITY CLASS (of this report): Unclassified

15a. DECLASSIFICATION/DOWNGRADING SCHEDULE:

16. DISTRIBUTION STATEMENT (of this Report): Approved for public release; distribution unlimited.

17. DISTRIBUTION STATEMENT (of the abstract entered in Block 20, if different from Report):

18. SUPPLEMENTARY NOTES:

19. KEY WORDS (Continue on reverse side if necessary and identify by block number): Flying Platforms, Platforms

Reproduced by NATIONAL TECHNICAL INFORMATION SERVICE, U S Department of Commerce, Springfield VA 22161

20. ABSTRACT (Continue on reverse side if necessary and identify by block number):

A study was conducted (1) to determine the feasibility of an unmanned, tethered, rotary-wing vehicle as an elevated platform for target detection sensors or other payloads and (2) to determine the best approach to implementing specified design and performance requirements. A review was made of current and past developments of tethered platforms, and a large number of rotary-wing lift concepts, rotor drive and long-endurance power concepts, and stabilization and control concepts were formulated for evaluation. Mathematical models were

DD FORM 1 JAN 73 1473 EDITION OF 1 NOV 65 IS OBSOLETE

Unclassified

SECURITY CLASSIFICATION OF THIS PAGE (When Data Entered)

Block 20

designed and a digital computer was used to generate quantitative data on air vehicle size, weight, horsepower, etc., for alternative systems. Emphasis was placed on systems utilizing fuel pumped from the ground or electrical power generated on the ground to obtain long endurance (16 hours). Quantitative data was also generated on aerial platform detectability in the forward area, system safety, and ground support equipment requirements.

The candidate systems were evaluated on the basis of performance, operational factors, system development requirements, and estimated cost, and a number of systems were found to be feasible. A turboshaft-driven synchropter, utilizing fuel pumped from the ground for long endurance, was recommended as the best overall approach for an unmanned tethered platform. A long-life, low-cost, low-maintenance platform can be readily produced with existing technologies and can be powered with available turboshaft engines. The synchropter will be small and light, and its low fuel consumption will make the system readily transportable in the forward areas. The synchropter, with cyclic pitch controls, will provide a stable platform for mission sensors and can be operated, without attention from the ground, by a simple automatic flight control system.

Start here

The recommended system is described in some detail in the report, and simple truck-mounted platforms and tether cable handling systems are presented based on experience with previous operational tethered rotary-wing vehicles. A general-purpose ground control station is presented for launch and retrieval of the air vehicle and for mission sensor operations.

[Airborne sensor, Tethered helicopter]

PREFACE

This study was conducted for the Eustis Directorate, U.S. Army Air Mobility Research and Development Laboratory by Kaman Aerospace Corporation under Contract DAAJ02-74-C-0008. The work was one of a series of tasks on Elevated Target Acquisition Systems defined by the Advanced Materials Concepts Agency of Army Materiel Command.

Mr. R. O. Stanton was the Technical Representative for USAAMRDL. The program at Kaman was directed by Mr. L. H. McNeill. The air vehicle sizing work was done by Mr. A. Plaks with assistance from Mr. R. C. Meier. Stability and control analyses and studies of air vehicle trim were performed by Mr. W. E. Blackburn. Mr. J. Steinback did the preliminary design work on the air vehicle and the ground station. Messers C. R. Akeley and D. R. Barnes designed the tether cables and calculated cable loads.

TABLE OF CONTENTS

	Page
PREFACE	iii
LIST OF ILLUSTRATIONS	viii
LIST OF TABLES	xi
INTRODUCTION	1
1.1 Background	1
1.2 Objectives of the Study Program	2
1.3 System Requirements	3
1.4 Study Program Plan	3
REVIEW OF TETHERED PLATFORM PROGRAMS	7
2.1 Summary	7
2.2 Tracy Teknocraft Tethered Platform	14
2.3 Dornier Keibitz System	15
AERIAL PLATFORM SIZING	16
3.1 Methodology	16
3.2 Pumped Fuel Systems	30
3.3 Electric Power Systems	56
3.4 Integral Fuel Systems	72
3.5 Compressed Air Systems	74
3.6 Autogyros	77
AERIAL PLATFORM DETECTABILITY	80
4.1 Aural Detection	80
4.2 Infrared Detection	83
4.3 Radar Detection	85
4.4 Visual Detection	86
STABILIZATION AND CONTROL	87
5.1 Attitude Stabilization and Control	87
5.2 Directional Stabilization and Control	92
5.3 Air Vehicle Trim Attitude	94
5.4 Station Keeping	96
5.5 Automatic Flight Control Systems	99

Page

GROUND EQUIPMENT 100

6.1 Fuel Pumping Systems 100
6.2 Electric Power Systems 100
6.3 Compressed Air Systems 101
6.4 Cable Management Systems 101
6.5 Launch/Retrieve Platform 101

SYSTEM SAFETY 104

7.1 Fire 104
7.2 High Voltage 104
7.3 Explosions 104
7.4 High Velocity Downwash 104
7.5 Unshielded Rotors 105
7.6 Lightning 105

SYSTEM EVALUATION 106

8.1 Rejected Concepts 106
8.2 Candidate Concepts. 109
8.3 Selected Concepts 114

ANALYSIS OF THE BASELINE SPECIFICATION 115

REEVALUATION OF THE SELECTED BASELINE SYSTEM- 117

10.1 General Characteristics 117
10.2 Air Vehicle Costs 120
10.3 Reliability 122
10.4 Maintainability 122
10.5 Detectability 123
10.6 Transportability. 124
10.7 Adaptability to Electric Power. 124

IMPACT OF VARIATIONS IN SPECIFICATIONS ON THE SELECTED AIR VEHICLE . 125

11.1 Payload Size and Weight Variations. 125
11.2 Endurance Variations. 125
11.3 Tether Cable Length Variations. 125
11.4 Rate of Climb and Descent Variations. 127
11.5 Atmospheric Variations. 127
11.6 Combined Effects. 127
11.7 Gust Variations 128

	Page
RECOMMENDED SYSTEM	134
12.1 Air Vehicle	134
12.2 Fuel System	136
12.3 Flight Control System	141
12.4 Ground Support Equipment	141
12.5 On-Station Attitude and Position	143
GROUND CONTROL STATION DESIGN AND OPERATING PROCEDURES	148
13.1 System Requirements	148
13.2 Control Station Design	149
13.3 Operational Procedures	154
13.4 Hardened Systems	155
CONCLUSIONS	160
REFERENCES	161
APPENDIX	
Group Weight Statement	162
LIST OF SYMBOLS	168

LIST OF ILLUSTRATIONS

Figure		Page
1	Carde Periscopter	10
2	Fairchild Helevator	11
3	Teknocraft Flying Platform	12
4	Dornier Keibitz	13
5	Aerial System Sizing Process	19
6	Hover Performance Model	22
7	Effect of Blade Loading and Tip Speed Variations on Power Required at 50 Knots	26
8	Forward Flight Performance Model	27
9	Tether Cable Deployment	29
10	Lifting Performance of Tethered Rotary-Wing Vehicles	31
11	Aircraft Engine Weight Model	34
12	Equivalent Power Ratio of Cold Cycle Engines	36
13	Equivalent Power Ratio of Hot Cycle Engine	38
14	Fuel Consumption of Aircraft Engines	39
15	Variation of Specific Fuel Consumption With Power Level	40
16	Fuel Consumption of Tip Burning Cold Cycle System	41
17	Typical Tether Cable for Pumped Fuel Systems	43
18	Fuel Line Design Parameters	44
19	Tether Cable Diameter - Pumped Fuel	45
20	Tether Cable Weight - Pumped Fuel	46
21	Tether Cable Load at Air Vehicle - Pumped Fuel	47
22	Conventional Turboshaft Powered Helicopter	50

Figure		Page
23	Tip Ram Jets	51
24	Turbine Powered Cold Cycle Tip Nozzles	52
25	Weight of Electric Motors	58
26	Typical Tether Cable for Electric Power	60
27	Weight of Tether Cable - Electric Power	61
28	Diameter of Tether Cable - Electric Power	62
29	Tether Cable Load at Air Vehicle - Electric Power	63
30	Electrically Powered Conventional Helicopter	66
31	Electrically Powered Coaxial Concept	67
32	Electrically Powered Synchropter Concept	68
33	Electrically Powered Tandem Concept	69
34	Electrically Powered Multiple Fan Concept	70
35	Electrically Powered Ducted Fan Concept	71
36	STAPL Autogyro	78
37	Tethered Platform Trim	95
38	Position Control Concepts	98
39	Cold Cycle Tip Driven Rotor	118
40	Turboshaft Powered Synchropter (Recommended Configuration)	119
41	Typical Response to Sharp-Edged Gust	131
42	Typical Response to Sinusoidal Gust	132
43	Pitch Attitude Response to 10-Knot Sinusoidal Gust	133
44	Typical Installation of Large Planar Array Radar Antenna	137
45	Typical Installation of Stabilized Imaging Sensor	138

Figure		Page
46	Typical Installation of Unstabilized Sensor	139
47	Air Vehicle Fuel System	140
48	Ground Fuel System	140
49	Mobile Tethered Platform System	144
50	1200 Gallon Fuel Supply System	145
51	Cable and Platform Position in 50-Knot Winds From the Rear	147
52	Ground Control Station	150
53	Plan View of Control Station.	151
54	Mission Control Station	152
55	Unmanned, Tethered, Rotary-Wing Platform in Operation	156
56	Air Vehicle and Winch Installed in M577 Command Post Carrier	157
57	Armor Protection Options for Air Vehicle	158

LIST OF TABLES

Table		Page
I	Air Vehicle Performance Requirements	4
II	Stability and Control Requirements (Design Objectives)	4
III	Summary of System Design Considerations	5
IV	Study Tasks	6
V	Characteristics of Tethered Platforms	8
VI	Characteristics of Kaman Tethered Systems	9
VII	Lift System Concepts	17
VIII	Power System Concepts	18
IX	Rotor/Fan Parameters	20
X	Performance Parameters for Eltas	24
XI	Air Vehicle Component Weight Models (Pumped Fuel Systems)	33
XII	Aerial Vehicle Sizes (Pumped Fuel Systems)	48
XIII	Aerial Platform Data - Pumped Fuel Concepts	49
XIV	Air Vehicle Component Weight Models (Electric Power Systems)	57
XV	Air Vehicle Sizes (Electric Power Systems)	64
XVI	Aerial Platform Data - Electric Power	65
XVII	Aerial Vehicle Sizes (Integral Fuel Systems)	73
XVIII	Comparison of Pumped Fuel & Compressed Air Systems Employing Cold Cycle Tip Nozzles	75
XIX	Air Flow Conditions	76
XX	Summary of Component and Total Vehicle Sound Pressure Levels	81
XXI	Aural Detection Ranges of Tethered Platforms	82

Table		Page
XXII	Infrared Radiation Sources	84
XXIII	Control Power Summary	90
XXIV	Preferred Directional Control Concepts	93
XXV	Trim Attitude Change With Airspeed	97
XXVI	Comparison of Major Ground Station Components	102
XXVII	System Evaluation Factors	107
XXVIII	Comparison of Pumped Fuel, Shaft Driven Concepts	111
XXIX	General Characteristics of Competing Concepts	117
XXX	Cost Comparison of Competing Concepts	122
XXXI	Impact of Variations in Specifications	126
XXXII	Stability Derivatives	129
XXXIII	AFCS Parameters	130
XXXIV	Trim Conditions in 50 Knot Winds	146
XXXV	Weight of Air Vehicle Armor Plate	159

SECTION 1

INTRODUCTION

1.1 Background

The need for, and the desirability of, elevated platforms for reconnaissance and surveillance work is generally accepted by all. The first tethered observation platforms appeared during the Civil War and were supported by balloons. Von Karman is reported to have built and flown an electrically powered rotary lift device in 1918 to replace vulnerable barrage balloons. The first successful tethered rotary-wing elevated platform was deployed from a submarine by the Germans during World War II. It was an unpowered autogyro, controlled by a man who doubled as observation and data processing system.

Since World War II there have been several programs involving development of unmanned, tethered, rotary-wing platforms. The first known design and analysis effort in the United States was performed by Kaman in 1953-54 and resulted in a preliminary design of an electrically powered synchropter supporting a 2000-foot vertical wire transmitting antenna for CYTAC.* The first successful tethered, electrically powered, rotary-wing vehicle was flown by Kaman at Bloomfield, Connecticut, in 1958, and the only known operational system employing a tethered rotary-wing vehicle was developed by the General Electric Company and Kaman for the U.S. Navy in 1963-65. A brief summary of these and other programs on unmanned, tethered, rotary-wing platforms is given in Section 2.

The utilization of a tethercopter for a given military mission must be based on an evaluation of the unique benefits as well as the costs. A tethered, automatically controlled, rotary-wing elevated platform can provide:

> Erection and retrieval of the platform by automatic means with small, mobile facilities without expendables, e.g., jato bottles.
>
> Station keeping at little or no expense without a navigation system or auxiliary propulsion system.
>
> Long endurance at no expense to air vehicle size, weight and power.
>
> All-weather operation of the platform without special equipment.
>
> Nightime and daytime operation of the platform without special equipment.

---

* Early name for developmental Loran-C.

If the platform is unmanned, additional benefits are:

Reduction in air vehicle size, weight and costs.

Increase in air vehicle reliability.

Increase in endurance without regard to man's (aviator's) limits.

Utilization of the elevated platform in high risk situations.

These supplemental benefits are generally accepted for all unmanned RPV's.

1.2 Objectives of the Study Program

The primary objectives of the study reported on here were to:

Establish the feasibility of an unmanned, tethered, rotary-wing platform for specified missions, and

Define the best technical approach to implementing the aerial platform.

Define the essential characteristics of a ground control station.

The primary missions studied were:

Surveillance of the forward area to detect low-flying aircraft and moving ground targets.

Location, tracking, and laser designation of targets.

Location of enemy artillery and rocket launchers.

Other missions of interest were:

Indirect fire control

Electronic countermeasures

ELINT or electronic support measures

Communication relay

RPV control

Characteristics of the tethered platforms best for each mission listed may vary over an appreciable range. The general approach to the study program involved first a search for the one baseline configuration best able to fulfill a composite mission specification and a general set of operational requirements, and second, a study of the impact on the baseline system of variations in the baseline specifications.

1.3 System Requirements

The composite requirements for baseline system investigations are listed in Tables I, II, and III. The variations in performance requirements to be considered are also listed in Table I.

1.4 Study Program Plan

To define the best baseline system for the stated requirements, the most promising alternatives for components and subsystems were defined, the performance and component characteristics were estimated, and various combinations of components and alternative systems were evaluated. The critical technical issues were: the configuration of the lift system, the drive system, the means for achieving long endurance, attitude control and stabilization, and the position control system.

The basic question of system feasibility was assessed by evaluating answers to the following questions:

1. Does the expected or estimated performance meet the stated or desired requirements?

2. Are the selected component and subsystem designs within the existing or projected state of the art?

3. Is the system complexity consistent with the expected deployment and operation?

4. Are the logistic support requirements reasonable?

The work was planned and executed in three basic tasks as defined in Table IV. The results presented herein generally follow the tasks outlined.

TABLE I. AIR VEHICLE PERFORMANCE REQUIREMENTS

Payload	Baseline Design	Variations
Size:	24" x 24" x 16"	18" x 18" x 12" 30" x 30" x 20"
Weight:	200 lb	150, 300 lb
Power For Payload:	3 KVA	-
Altitude Above Terrain:	1000 ft	500, 2000 ft
Atmosphere at Platform Altitude:	4000 ft, 95°F	6000 ft, 95°F
Endurance:	16 hr	8, 23 hr
Rate of Climb/Descent (Average):	500 ft/min.	250, 1000 ft/min.
Steady Winds:	50 kn	-
Gusts:	10 kn	35 kn
Critical Gusts:	35 kn	50 kn

TABLE II. STABILITY AND CONTROL REQUIREMENTS (DESIGN OBJECTIVES)

Transient Response to Gusts:

± 2 Degrees Maximum Variation in Pitch, Roll, Yaw Attitude

± 7 Degrees/Second Maximum Variation in Pitch, Roll, Yaw Rate

Heading Control:

Omnidirectional

Station Keeping in 50 knot winds:

Horizontal Displacement from Tether Point: ± 25 Meters

Altitude Variation: ± 50 Ft

TABLE III. SUMMARY OF SYSTEM DESIGN CONSIDERATIONS
1. Low IR, radar and noise signatures
2. Vibration levels for the sensor package of not more than .2 g's at frequencies of 2 to 5 Hz and a velocity of 2.5 in./sec above 5 Hz.
3. Two 75-ohm coaxial cables in the tether for data link to ground control station.
4. Transportability to enable easy ground movement by conventional Army ground vehicles.
5. Minimum time and skill required for maintenance, set up, pre-launch checkout and disassembly for transport with minimum special equipment.
6. Ability to save the total aerial platform and/or sensor package in the event of a power-off landing.
7. Low downwash velocities to minimize danger to operators and GCS.
8. Maximize the number of launch and retrievals without malfunction.
9. Minimum operator skill required during launch, operation and retrieval.
10. Minimize the hazards due to lightning strikes.
11. Capable of operating out of sight of GCS to enable operation in fog and overcast conditions.
12. Control and stability shall be such that the vehicle can be returned to a stable condition after disturbance by a gust of critical gust speed as specified in Table I.

TABLE IV. STUDY TASKS
Task I - Baseline System Design & Analysis
1.1 Review System Requirements
1.2 Review Tethered Platforms
1.3 Analysis of Lift Systems
1.4 Analysis of Power Systems
1.5 Analysis of Stability & Control
1.6 Selection of Best Approach
1.7 Preliminary Design of Baseline System
Task II - Analysis of Alternate Requirements
2.1 Payload Size & Weight
2.2 Endurance
2.3 Cable Length
2.4 Rate of Climb and Descent
2.5 Atmospheric Conditions
2.6 Gusts
2.7 Minimum Performance System
2.8 Maximum Performance System
Task III - Preliminary Design of Ground Control Station

SECTION 2

REVIEW OF TETHERED PLATFORM PROGRAMS

2.1 Summary

Several attempts have been made to develop a tethered platform for military use. Petrides (Reference 1) traces some of the early developments in foreign countries and early work by the Signal Corps in this country. The efforts of significance are summarized in Tables V and VI. Kaman Corporation's work in tethered platforms over the past 20 years is described in Table VI.

Figures 1 through 4 show some of the more interesting configurations and depict the wide range of concepts that have been considered. Kaman's prior knowledge of these concepts led to the formulation of a study plan for this contract which included all of the basic methods for generating lift, driving rotors, providing long endurance, and stabilizing the attitude and position of the aerial vehicle. The pros and cons of the basic configurations and methods are presented in later sections. The emphasis here is on lessons learned and concepts demonstrated.

In summary, it is clear that many concepts have been proposed for tethered platforms, but few platforms have actually been flown. To our knowledge only Kaman's SVLF antenna support system reached operational status.

Low disc loading rotors seem to have been the preferred means for generating lift, and coaxial and synchropter configurations dominate. Cyclic pitch was clearly the preferred means for stabilizing and controlling the aerial platforms. Electric power has dominated as the means for providing long endurance, but Spacecraft Inc.(SCI) and Dornier have done a lot of work on pumped fuel systems.

In addition to these general observations, the following significant points can be made by reviewing past programs.

1. Lightweight induction motors can be fabricated and utilized to drive high inertia rotor systems. However, reliability and endurance of lightweight, high-speed, high voltage, induction motors have not been demonstrated due to lack of funds.

2. Pumping fuel to an aircraft turbine was satisfactorily demonstrated by Spacecraft, Inc. in this country in 1969 and by Dornier in Germany. SCI's work at pumping pressures of 6500 psi may represent an upper limit of practicality and may perhaps indicate a limit for pumped fuel concepts to platform altitudes of 10,000 feet.

TABLE V. CHARACTERISTICS OF TETHERED PLATFORMS

DEVELOPER	MISSION	LIFT SYSTEM	DRIVE SYSTEM	POWER SYSTEM	CONTROL SYSTEM	AIR VEH. WEIGHT	DEVEL. STATUS	COMMENTS
Cardo	Battlefield Surveillance	Coax Propellers 6.5 Ft Dia.	Gearbox/2 Elec. Motors 22 hp	Ground Gen. Elec. Power	Tether Cable Reaction	60 Lb plus 30-Lb Payload	Design Concept 1963	Ref Cardo Report 439/63
Nord Aviation	Battlefield Surveillance	Shrouded Fan & Coax Propeller	Gearbox/Turbo-shaft Engine	Pumped Fuel	Multiple Tethers	?	Flight Tests 1967	NORD Model 510
Johns Hopkins APL	Battlefield Surveillance	Multiple Fans	Multiple Motors	Ground Gen. Elec. Power	Variable RPM	150 Lb plus 300-Lb Payload	Concept Presented 1959	
Sikorsky Aircraft Inc.	ALF Antenna Support	Sikorsky SK-1A	Gearbox/Turbo-shaft Engines	Pumped Fuel	Cyclic Pitch		Complete System Dev. - 1969	
Marchetti	Observation Platform	Coax Props 5.25 Ft Dia.	Electric Motor	Ground Gen. Elec. Power	?	121 Lb plus 165-Lb Payload & Tether	Flight Demo 1970	
Tracy Technocraft	Battlefield Surveillance	Coax Props 5.2 Ft Dia.	Gearbox/ 2 Elec. Motors, 20 hp	Ground Gen. Elec. Power	Duct Vanes/Diff. Coll Pitch	53 Lb plus 85-Lb Payload	Flight Tests at 50 Ft, 1970	
Oklahoma State University	Sensor Platform	Main Rotor 17 Ft. Dia.	Gearbox/Elec. Motor/Tip Rockets	Ground Gen. Elec. Power	Cyclic Pitch	175 Lb plus 504 Lb Fuel+Payload	Prelim. Analysis 1972	
Dornier	Sensor Platform	Single Rotor 25.3 Ft. Dia.	Tip Nozzles/ Turbo-Comp. Allison 250-C20	Pumped Fuel	Cyclic Pitch	100 Lb +110 Lb Payload & 200-Lb Tether	Adv. Development 1973	Exhibit DO32R
Fairchild	LF Antenna Support	Coax Rotors 14 Ft Dia.	Electric Motor, 40 hp	Ground Gen. Elec. Power	Tether Cable Reaction	195 Lb plus 50-Lb Payload	Prototype Demonstrated	Helivator

TABLE VI. CHARACTERISTICS OF KAMAN TETHERED SYSTEMS

DEVELOPER	MISSION	LIFT SYSTEM	DRIVE SYSTEM	POWER SYSTEM	CONTROL SYSTEM	AIR VEH. WEIGHT	DEVEL. STATUS	COMMENTS
Kaman	Antenna Support - Long Duration 2500 Ft	Synchropter, 35-Ft Dia.	Gearbox/Elec. Motor, 340 hp	Ground Gen. Elec. Power	Cyclic Pitch - Ground Ref Station Keeping	1780 Lb	Concept 1954 Report G-73	Case B, Design To
Kaman	50-Lb Payload Support - 2000 Ft	Synchropter	Gearbox/Elec. Motor, 100 hp	Ground Gen. Elec. Power	Cyclic Pitch, No Station Keeping	920 Lb	Concept 1958 Report G-75	Case A, Stream-lined Cable
Kaman/APL	Surveillance at Sea, Radar, 1000 Lb, 2000 Ft Alt	Synchropter HOK-1, 43-Ft Dia.	Gearbox/3 Elec. Motors, 200 hp Total	Ground Gen. Elec. Power	Cyclic Pitch, No Station Keeping	3733 Lb	Design Proposed, 1957 - Report 204	
Kaman	Demonstrate Elec. Helicopter	Synchropter HOK-1	Gearbox/Elec. Motor, 240 hp	Ground Gen. Elec. Power	Cyclic Pitch	2300 Lb	Successful Flt Tests - 1958	Ref. G-112
Kaman	SALF Antenna Support, 10,000 Ft	Synchropter HH-43B 47-Ft Dia.	Gearbox/2 Elec. Motors, 600 Total	Ground Gen. Elec. Power	Cyclic Pitch, No Station Keeping	3021 Lb	Prelim. Design Contract	Kaman Model K-132, Ref. G-145
Kaman	SALF Antenna Support, 4000-10,000 Ft	Synchropter HH-43B 47-Ft Dia.	Gearbox/Gas Turbine T51-L-9, 900 hp	Integral Fuel	Cyclic Pitch, No Station Keeping	4582 Lb without Fuel	Operational System on USS Wright, 1960-69	Kaman Model K-137, Ref. R-620
Kaman	Electronic Surveillance	Autogyro Rotor	Electric Motor Propeller, 90 hp	Ground Gen. Elec. Power	Direct Tilt Rotor, No Station Keeping	385 Lb plus 150-Lb Payload	Exp. Model Fab Complete	U.S. Navy SIAPL Program

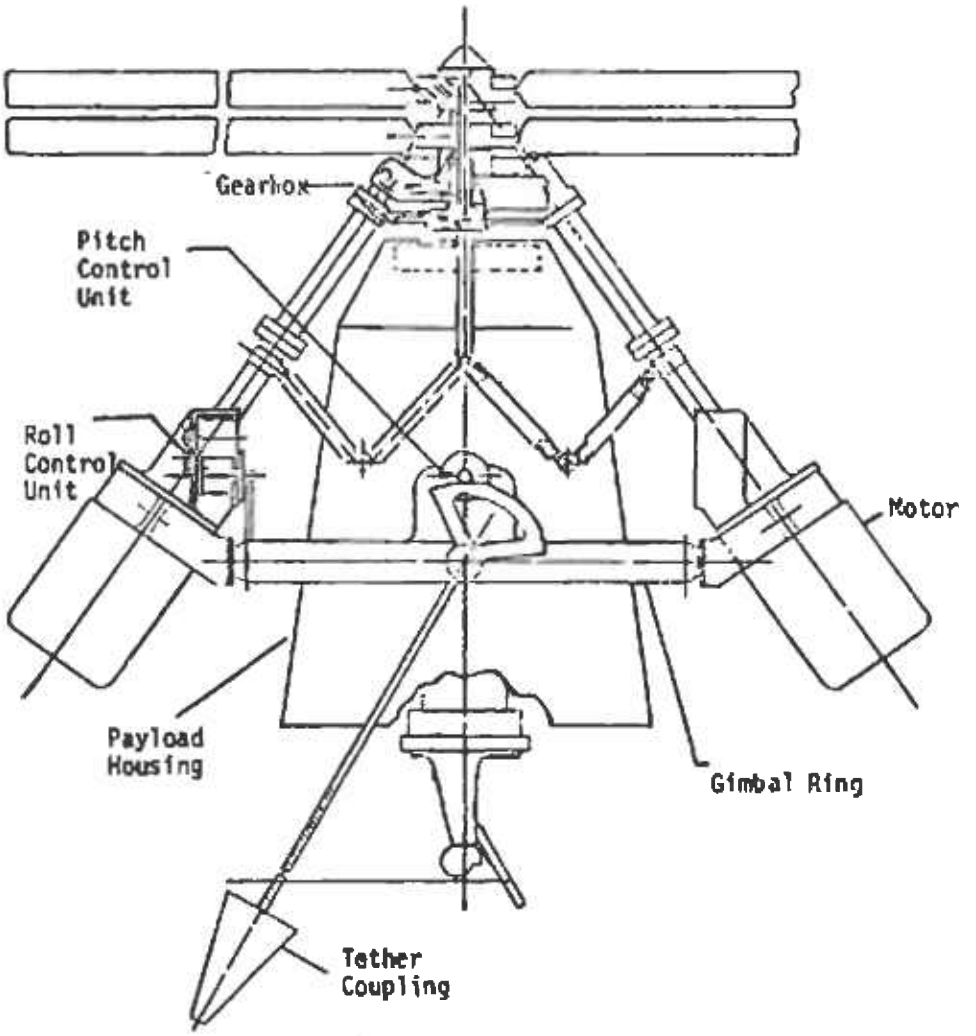

Figure 1. Carde Periscopter

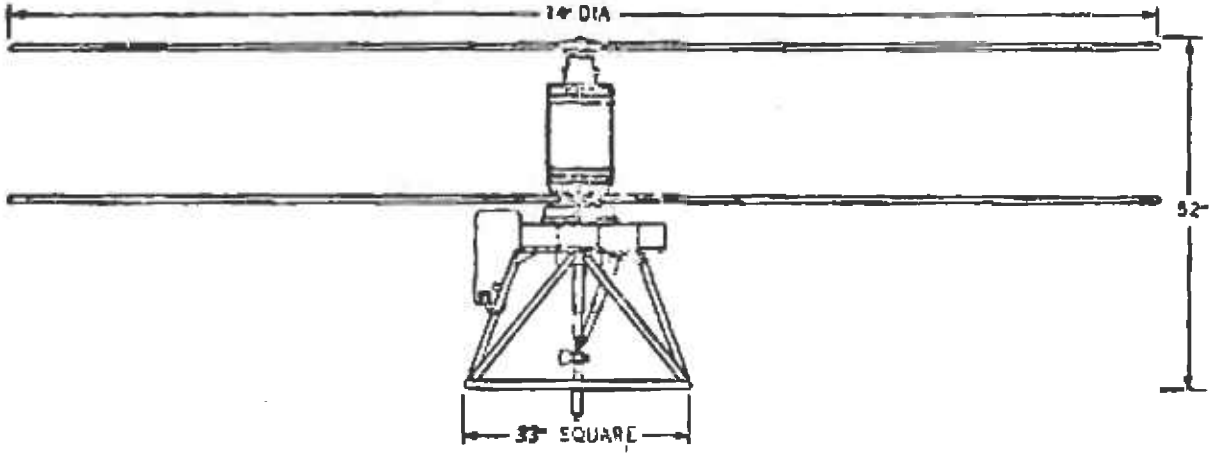

Figure 2. Fairchild Helevator.

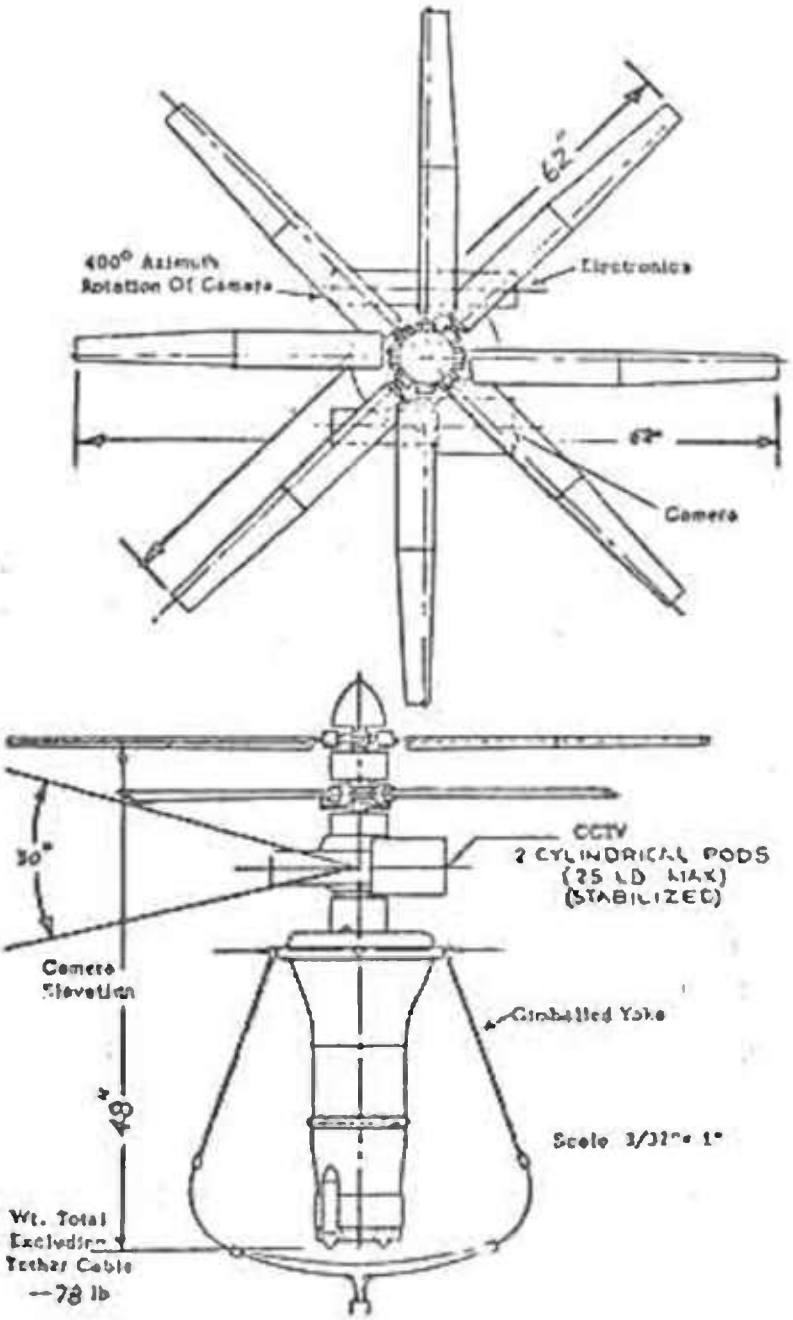

Figure 3. Teknocraft Flying Platform.

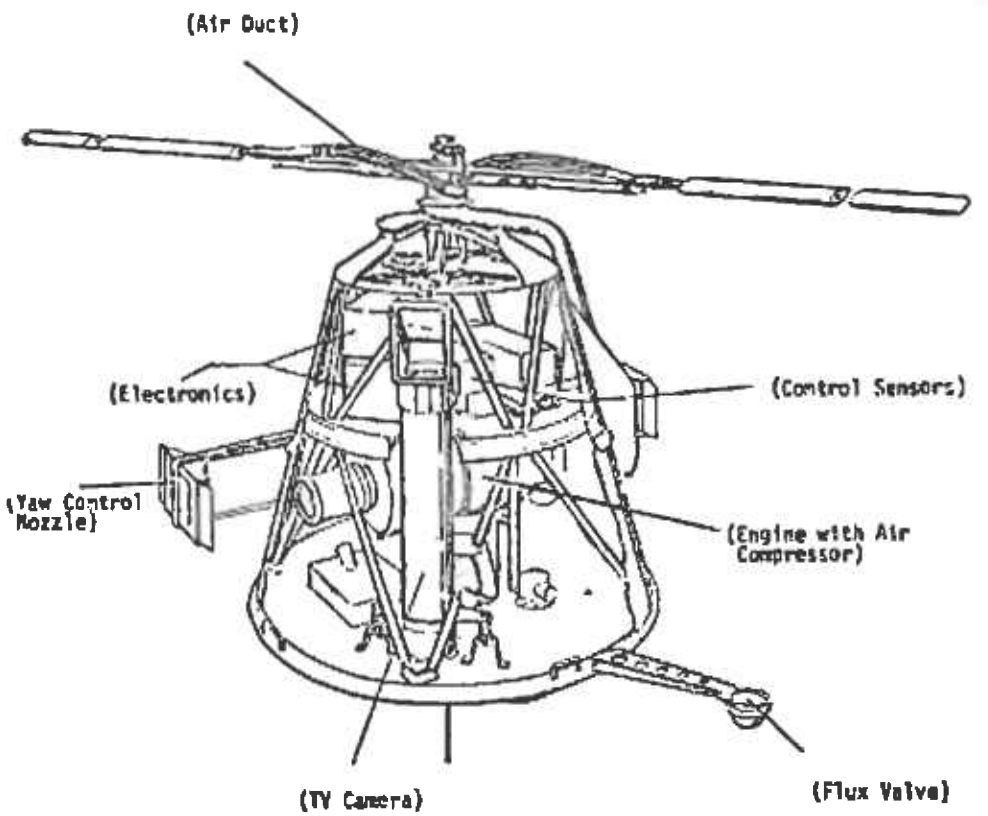

Figure 4. Dornier Keibitz.

3. Attitude stability and station keeping with simple automatic control systems utilizing cyclic pitch of fully articulated rotors have been demonstrated by the Kaman Corporation and by Dornier.

4. Highly automatic launching and retrieving of tethered platforms has been demonstrated by Kaman Corporation. Manual operation can be restricted to selecting the maximum winching speeds or the maximum cable tensions.

5. On-station control of tethered platforms has been demonstrated by Kaman and Dornier with simple control concepts. Kaman has demonstrated remote position control utilizing cable angle sensing.

A review of past programs also reveals that certain concepts have not been demonstrated satisfactorily. Most important here are (1) the use of unconventional lift generating devices and (2) the use of unconventional means for obtaining stability and control. These items will be discussed further in subsequent sections of the report. This summary will be concluded with a brief review of the electric powered platform developed by Tracy Tecknocraft and the DO32K Keibitz platform developed by Dornier in Germany.

2.2 Tracy Teknocraft Tethered Platform

The platform developed by Tracy Teknocraft (Reference 1) represents the latest in a long series of electrically powered coaxial rotor tethered platform efforts. Before reviewing the air vehicle design, some comments seem appropriate on the state-of-the-art review presented by Petrides within his final report. This report, dated September 1970, says "the most probable reason for the lack of a successful flying machine to date may be attributed to the insufficient effort applied by engineers to the stability and control problem". The first part of the statement is incorrect, since both Kaman and Dornier had successfully flown tethered platforms long before 1970. The second part of the statement is closer to fact but it would be better to say that certain engineers chose the wrong stability and control concept rather than say that they made an insufficient effort. Petrides' conclusion drawn about previous platform efforts was, "the job was underestimated". This, of course, relates to the unsuccessful efforts. Aviation history is replete with instances of failure to recognize the unforgiving nature of the behavior of flying machines with marginal performance and marginal controllability. Tethered platforms present no new challenge to engineering or to the aviation industry. Therefore, there seems to be no valid reason for beating off in new and unexplored directions in search of new concepts for generating lift or controlling a lifting vehicle in space.

The Teknocraft platform, shown in Figure 3, employs two 4-bladed, counter-rotating, coaxial rotors driven by two electric motors. The rotors have flexible hubs, but except for some differential collective

pitch control, they are not used to control the platform. An auxiliary fan drives air across moveable vanes at the end of a long vertical duct to generate pitch and roll moments for platform stability and control. A large gimballed yoke transfers tether cable loads to the vehicle's c.g., thus eliminating, or minimizing, upsetting moments due to cable loads. With the limited control effectiveness of the duct vanes, this gimballed arrangement is probably necessary. However, it limits placement of payloads and introduces some questions about retreival and landing.

Two aspects of the Teknocraft configuration and general approach should be questioned. The first relates to stability and control. In his own review of Nagler's CORDTOR configuration, an ancester of his own device, Petrides describes the difficulties in stability and control as follows: "No control was provided to the propeller which supports most of the weight". But Petrides resorts to a set of vanes in a high-velocity airflow duct to obtain control. Except for heading control via differential collective pitch, no attempt is made to control attitude, stability or position in space by controlling the largest force available in the system, namely the lift vector. Secondly, Petrides' concern with weight savings appears to be unfounded. If the tethered platform is to be employed in the battlefield area and operated by field personnel under field environment, it must be rugged, have long life, and have substantial performance margins. The rotor and the rotor drive system must be sized to produce excess lift and high cable tensions under all possible operating conditions. Precision control of rpm to control lift, and the use of streamlined cables to reduce cable tension will reduce reliability and life, and complicate field operations. Increasing the horsepower, and rotor diameter if necessary, would eliminate the weight problems of the system.

2.3 Dornier Keibitz System

Dornier in the Federal Republic of Germany has been working on a tethered platform since 1965, utilizing the basic reaction driven rotor system from the one-man DO32E helicopter. Dornier demonstrated the feasibility of an automatically stabilized tethered platform in 1965 and 1966. Fuel is pumped from the ground to a turboshaft engine driving a compressor. The cold (250°F) compressed air is ducted through a hollow leading-edge section of the rotor blade to tip nozzles. The experimental models had limited lift capability but all of the basic problems of attitude stabilization and position control have been solved. Prototypes of operational vehicles (See Figure 4) are presently being readied for flight testing and will utilize an Allison 250-C20 engine with a maximum rating of 400 hp at SL. Results of flight testing indicate that platform stability is good, with attitude excursions less than 1° reported in gusty air. A fully articulated rotor with cyclic pitch control is employed in the Keibitz.

SECTION 3

AERIAL PLATFORM SIZING

3.1 Methodology

3.1.1 General Approach

Physical characteristics of the alternative aerial platforms were evaluated in the search for the best technical approach to meeting the performance requirements. Rotor and fan diameters, rotor horsepower, gross weight, fuel flows, etc., were calculated for a number of lift system and power system combinations. Table VII lists the lift systems evaluated together with a primary candidate for drive and power system. Table VIII lists the alternative power systems considered.

Aerial platform characteristics were calculated with the aid of a digital computer. Mathematical models were formulated for aerial vehicle weight, tether cable loads, and horsepower requirements based on statistical data, good design practice, and engineering projections. These models, and the basis for projections, are described in subsequent sections. Results obtained were correlated with previously published data or comprehensive computer models used at Kaman for helicopter design and performance calculations, and good agreement was obtained. Absolute accuracy of the models was not a criterion for their design; the objective was to generate quantitative data that could be used to compare candidate aerial platforms.

The computation process, as shown in Figure 5, was iterative with operator interaction. A value for total installed horsepower was assumed, cable loads and aerial vehicle gross weight were calculated, the rotor (or fan) was sized to the loads, and the required horsepower was calculated. The calculated horsepower was compared to the value assumed and the cycle repeated as necessary. As indicated in Figure 5, air vehicle horsepower was calculated for the specified climb condition (500 ft/min) assuming no wind, and for station keeping in 50-knot winds. The installed horsepower is the larger of the two values.

3.1.2 Rotor/Fan Parameters

The rotor and fan parameters utilized in the air vehicle sizing models are tabulated in Table IX.

TABLE VII. LIFT SYSTEM CONCEPTS

LIFT SYSTEM CONCEPT	ROTOR	ROTOR DRIVE SYSTEM	AIR VEHICLE POWERPLANT	ENERGY SOURCE
A	Main/Tail	Gearbox	Gas Turbine	Pumped Fuel
B	Main/Tail	Gearbox	Elec Motor	Ground Power
C	Single	Tip Nozzles	Gas Turbine	Pumped Fuel
D	Coax	Gearbox	Gas Turbine	Pumped Fuel
E	Synchropter	Gearbox	Gas Turbine	Pumped Fuel
F	Tandem	Gearbox	Gas Turbine	Pumped Fuel
G	Autogyro	-	Elec Motor(1)	Ground Power
H	Ducted Fans	Gearbox	Elec Motor	Ground Power
I	Multiple Fans	Direct Drive	Multiple Motor	Ground Power
J	Main/Tail	Gearbox	Gas Turbine	Integral Fuel

(1) Electric motor drive for propeller

TABLE VIII. POWER SYSTEM CONCEPTS

PUMPED FUEL SYSTEMS

POWER SYSTEM CONCEPT	ROTOR/FAN DRIVE	A/V POWER PLANT	FUEL
A	Gearbox	Gas Turbine	JP-4/5
B	Gearbox	Gas Turbine	Diesel Oil
C	Gearbox	Gas Turbine	Natural Gas
D	Gearbox	Rotary Engine	Aviation Gas
E	Gearbox	Recip Engine	Aviation Gas
F	Tip Nozzles (Cold)	G.T./Bleed Air	JP-4/5
G	Tip Nozzles (Cold)	G.T./Aux Comp	JP-4/5
H	Tip Nozzles (Hot)	G.T./Tip Burn	JP-4/5
I	Tip Jets	Ram Jet	JP-4/5
J	Tip Jets	Pulse Jet	JP-4/5
K	Jet Flap	Gas Turbines	JP-4/5

ELECTRIC POWER SYSTEMS

	ROTOR/FAN DRIVE	POWER PLANT	GCS GENERATOR DRIVE	FUEL
L	Gearbox	Elec Motor	Diesel	Diesel Oil
M	Gearbox	Elec Motor	Gas Turbine	JP-4
N	Gearbox	Elec Motor	Recip Engine	Gasoline

OTHER POWER SYSTEM CONCEPTS

O Fuel Carried in Air Vehicle
- Gearbox Rotor Drive
- Gas Turbine

P Pumped Compressed Air
- GCS Components:
  - Gas Turbine
  - Air Compressor
- Air Vehicle Components:
  - Rotor Drive by Tip Nozzles

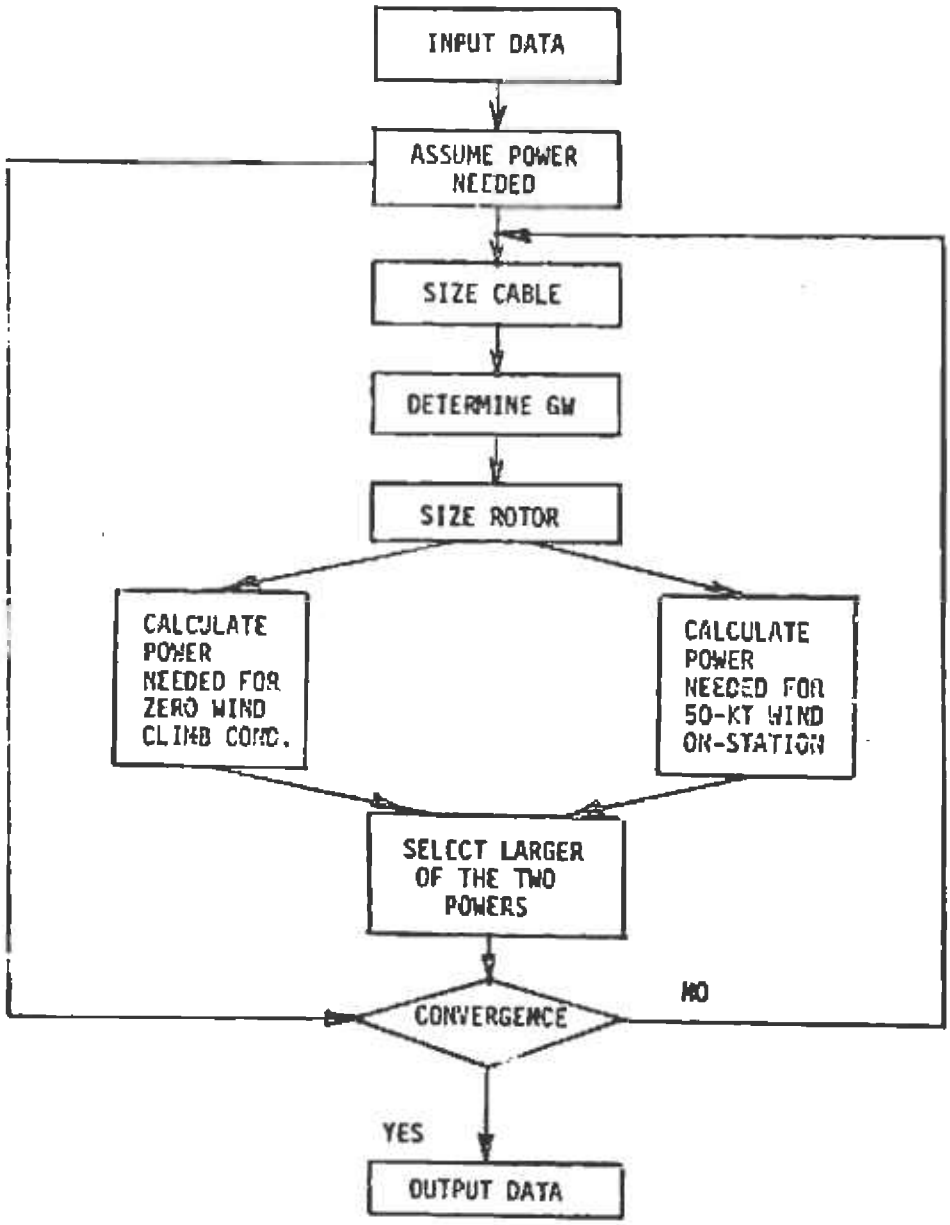

Figure 5. Aerial System Sizing Process.

TABLE IX. ROTOR/FAN PARAMETERS			
LIFT SYSTEMS	DISC LOADING DL lb/ft^2	MAX BLADE LOADING BL, lb/ft^2	TIP SPEED TOR, fps
Conventional	4	74	600
Coax/synchropter	4	74	600
Tandem	3.3	74	600
Reaction driven rotor	4	74	600(1)
Multiple fan	14	140	700
Ducted fan	40	250	1050

(1) Tip speed for rotors driven by ram and pulse jets was 750 fps.

A disc loading of 4 was selected for single lifting rotors and the coax/synchropter configurations to obtain good lift/power efficiency without excessive rotor diameters. For the tandem, the average disc loading of 3.3 shown in Table IX results in a disc loading of 4 at the aft rotor when the total load is split 40/60 between fore and aft rotors. The disc loading and blade loading for the multiple fans were taken from Rabenhorst's report (Reference 2) and the values for ducted fan were taken from General Dynamics report (Reference 3) on PEEK. All rotor and fan diameters are sized by the total lift required in hover.

$$\text{Rotor Dia} = 2\sqrt{\frac{\text{Gross Weight} + \text{Cable Weight} + \text{Bottom Tension}}{\pi \times \text{Disc Loading}}}$$

A rotor blade loading of 74 lb/ft^2 was selected to avoid stall at 50 knots, 4000 ft, 95°F. At standard sea level conditions this corresponds to 91.6 lb/ft^2 which is reasonable for NACA 23012 airfoils with zero twist or NACA 0012 airfoils with -8° twist. A stall margin of approximately 10 knots can be shown for both airfoils with the selected blade loading.

Solidity, σ, used in power calculations was computed from total lift

required at 50 knots.

$$\sigma = \frac{\text{Gross Weight + Vertical Cable Load}}{\text{Blade Loading X Disc Area}}$$

If the computed value of solidity resulted in blade aspect ratios more than 20, the solidity was recomputed with blade chord set at 5 percent of rotor radius. This criterion should minimize structural design problems with long, narrow rotor blades.

The tip speeds, shown in Table IX, were selected to provide relatively quiet operation without unduly compromising rotor and fan efficiency.

3.1.3 Hover Performance Model

The rotor or fan horsepower required to hover, out of ground effect, was computed from an empirical equation as a function of disc loading.

$$MRHP = 0.0435 \left(\frac{\text{Disc Loading}}{\text{Density Ratio}} \right)^{0.41} LIFT$$

This model is shown in Figure 6 together with a curve fit of statistical data and a family of power curves computed from KAC HOVER BY STRIP program for various solidities and tip speeds. The calculated data applies to conventional single lifting rotor machines and NACA 23012 airfoils. It contains the Goldstein correction factor for 4-bladed rotors and produces slightly optimistic results for 2-bladed rotors.
In determining lift, L, blockage is accounted for as:

$$L = (W + T_2) \; / \; \left(1 - \frac{K_B}{100} \right)$$

where K_B is the percentage lift loss due to blockage. In this study no significant differences could be estimated for blockage between different configurations. Of the configurations investigated, the tandem helicopter was thought to have larger than "standard" blockage. However, Sikorsky, in the AVLABS HLH report, found the net vertical drag of the single and tandem configurations (without external load) to be identical (3.6%). Thus, in this study, a constant value of 3% was used throughout in conjunction with the above equation.

The total shaft drive horsepower required, or equivalent tip driven horsepower, for any air vehicle configuration was computed from the following equation.

$$SHP = MRHP \left(1 + \frac{K}{100} \right) \frac{1}{\eta_M} + HP_{ACC}$$

Main rotor power requirements of the various lifting systems is accounted for by the factor K. The mechanical efficiency η_M accounts for gear

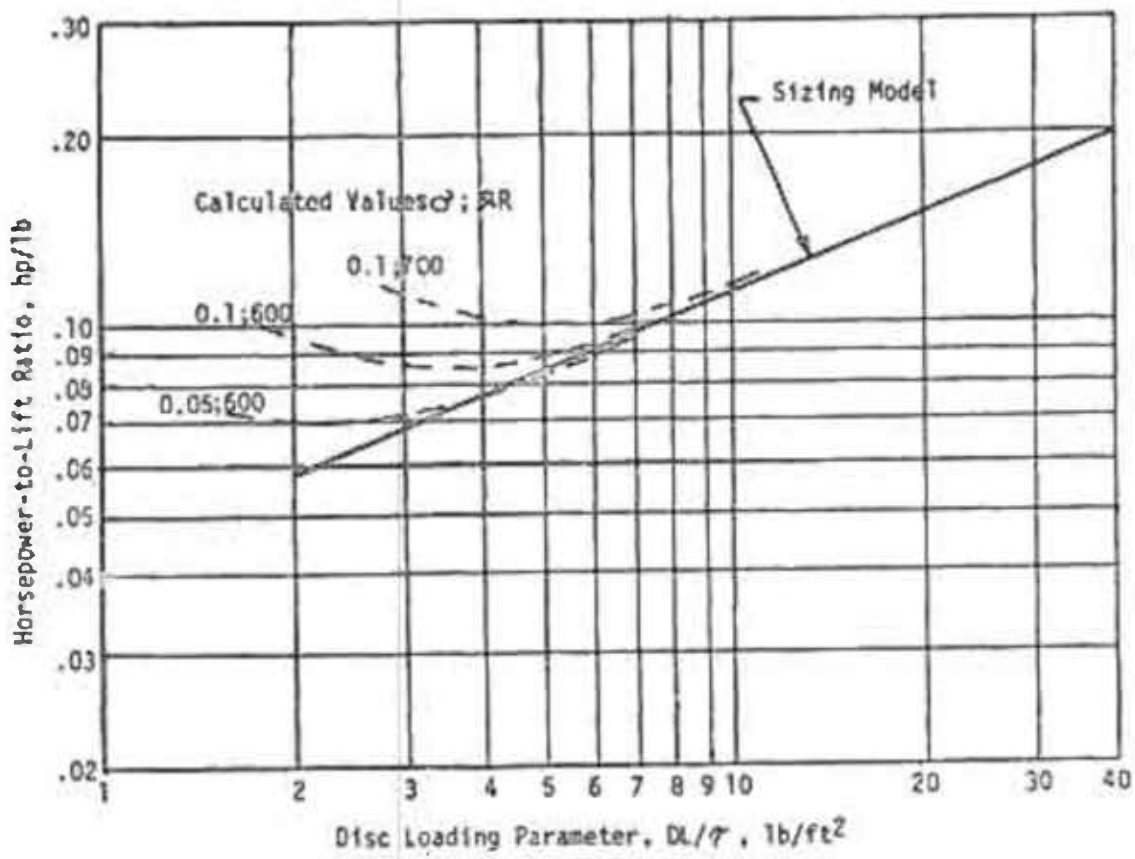

Figure 6. Hover Performance Model.

losses and tail rotor power, if any. HP_{ACC}, accessory power, was estimated to be 6 hp, independent of rotor configuration and drive system. Values for K are listed in Table X. The various configurations were compared to the standard rotor. From NACA TN 2318 test data, it appears that coax rotors require about 5% less power than standard, probably because the lower rotor recovers some energy in radial flow in the wake of the upper rotor.

For the synchropter, KAC test data also shows better hover performance for synchropters over conventional designs probably due to the larger projected rotor area than accounted for in performance calculations. Therefore, a 5% power reduction was assigned. Tandem helicopters suffer an induced power increase over that of two similar single rotors due to rotor overlap. The loss is about 8% for 33% overlap. Tip driven rotors were all penalized by a 5% power increase because of the thicker airfoils these rotors must use. Such an increase was also noted in DORNIER's test data comparison. Ducted propeller gains due to the shroud. From General Dynamic's "PEEK" study the hp reduction is 23% for the specified disc loading.

Table X also lists power required for torque balance and gear losses. For the gear driven rotors, two gear mesh drives are assumed resulting in a 2% power loss, except the tandem suffers an extra 1% due to extra bearings and turns. Tail rotor power loss of 9% is achievable with any medium disc loading rotor.

3.1.4 Power Required to Climb

The performance requirements called for an average rate of climb of 500 ft/min or a time-to-climb (to 1000 ft) of 2 minutes for the baseline system. For a fixed power level (SHP installed) the instantaneous rate of climb will vary with altitude. Calculations showed that the climb rate at 2/3 of final altitude was very close to the average rate of climb. This fact was used in the climb power calculations:

$$(MRHP)_{CLIMB} = (MRHP)_{HOVER} + \frac{L \times R/C}{33{,}000 \times C_c}$$

where $C_c = 1.25$ is the climb factor from flight test data of contemporary helicopters and L is the lift at 2/3 station altitude. A bottom tension of 100 lb was added to cable weight and air vehicle gross weight to get total lift.

3.1.5 Power Required in 50-Knot Winds

The horsepower required for station keeping in 50-knot winds was calculated from the following equation.

TABLE X. PERFORMANCE PARAMETERS FOR ELTAS

	Conventional Main and Tail Rotor	Coax	Synch-ropter	Tandem	Ducted Prop	Multiple Fan	Ram and Pulse Jet	Tip Nozzle Drives
HOVER								
Torque Balance Power (%MRHP)	9	0	0	0	0	0	0	1
Gear Loss (%MRHP)	2	2	2	3	0	0	0	0
Configuration Factor, K (%MRHP)	0	-5	-5	8	-23	0	5	5
Blockage K_B (%Thrust)	3	3	3	3	0	0	3	3
50 KNOTS								
Torque Balance Power (%MRHP)	3	0	0	0	0	0	0	1
Gear Loss (%MRHP)	2	2	2	3	0	0	0	0
K (%MRHP)	0	10	10	23	0	0	5	5
Drag Coeff. $f/H^{2/3}$	.1	.1	.15	.1		.15	.1	.1
Propulsive Eff. n_p	.9	.9	.9	.9		.9	.9	.9

$$MRHP = \left(\frac{MRHP}{L}\right)_{*} \left(1 + \frac{K}{100}\right) L + \frac{V}{550} \cdot \frac{BL\,(\sigma - \sigma_{*})}{4\,q}\, L$$

$$+ \frac{VF}{550\eta_p} + \frac{V_o\, f}{550\eta_p}$$

K is the configuration correction factor listed in Table X. F is the horizontal component of cable tension, f is the equivalent fuselage drag area, and η_p is the rotor propulsive efficiency. A nominal value of 0.041 was used for $\left(\frac{MRHP}{L}\right)_{*}$ representing power required for an untethered conventional helicopter rotor with solidity of 0.05 at 50 knots. The K factor in the second term in the equation accounts for rotor variations.

Figure 7 shows values for $(MRHP/L)_{*}$ obtained from KAC's basic ROTOR PERFORMANCE program. At the selected blade loading of 74 (BL/τ = 91.6) the calculated nominal value for the NACA 23012 airfoil is 0.036. The nominal value of 0.041 used in the 50-knot performance model is, therefore, conservative.

Wind tunnel test data of NACA TN3236 (August 1954) reported a 10% increase in power required for a coax as compared to a single main rotor configuration. The synchropter was similarly penalized. For this tandem configuration, a 23% increase in power was calculated for the 50 knots. This is due to the induced power increase assuming a 33% rotor overlap. All tip driven rotors were penalized by 5%, to account for the increased blade thickness. The K factors are listed in Table X. The effect of increased tip speed is also shown in Figure 7. Comparison is made with zero twist blades at ΩR = 600 & 750 fps. Curves show a considerable power increase with increased tip speed. At the blade loadings used in the study, this increase is $\Delta MRHP/L$ = .01, which is somewhat more than the penalty assumed. Thus the power requirements calculated for the configurations with high tip speed, such as the ram jet and the pulse jet, may be optimistic at 50 knots. A check on the power adjustment term for solidity is shown in Figure 8. Excellent agreement was obtained over a wide range of blade loadings.

3.1.6 Rotor Tip Thrust Requirements

The rotor power required for tip driven concepts was determined using the procedures outlined in sections 3.1.2 through 3.1.5. The tip thrust required to develop this rotor power was calculated from the following relationship:

$$\text{Nozzle Thrust (Each)} = \frac{\text{Rotor Power}}{\text{Tip Speed X Number of Blades}}$$

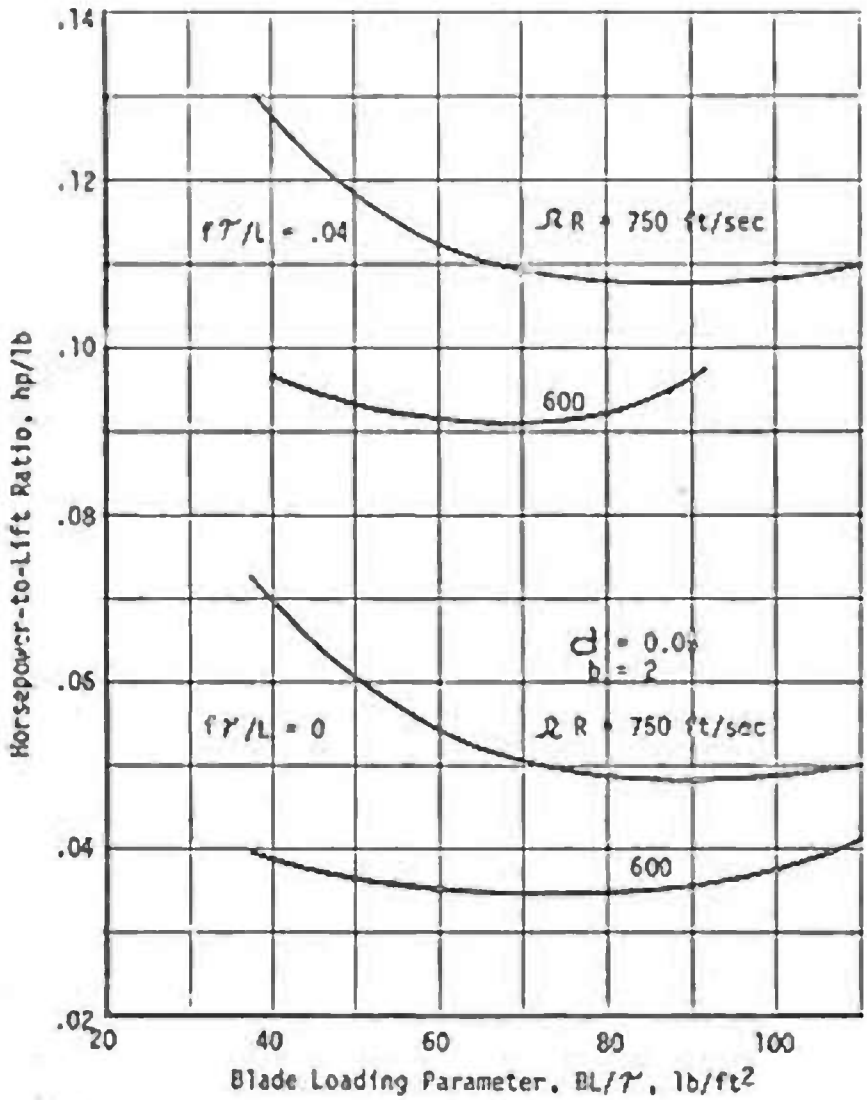

Figure 7. Effect of Blade Loading and Tip Speed Variations on Power Required at 50 Knots.

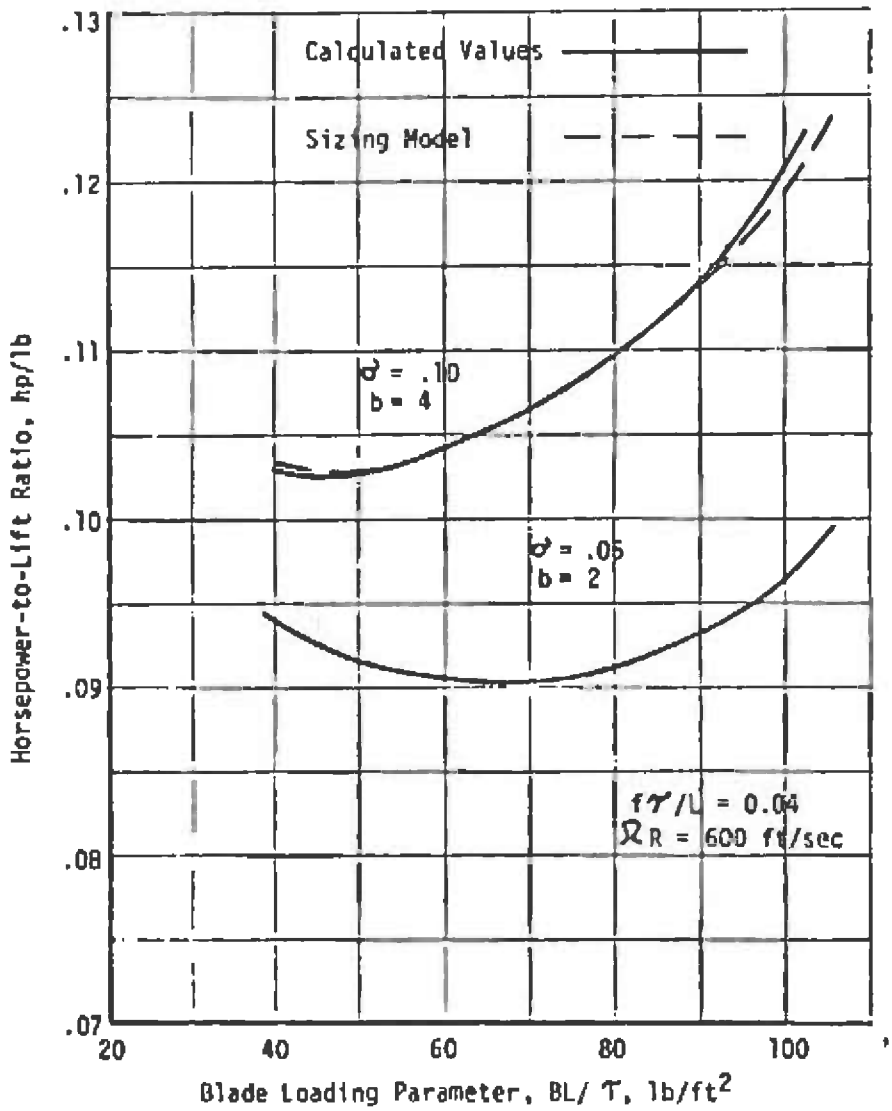

Figure 8. Forward Flight Performance Model.

Flow rates were determined from the thrust level and nozzle velocity as follows:

$$\text{Flow Rate} = \frac{\text{Thrust}}{\text{Nozzle Velocity} - \text{Tip Speed}}$$

$$\text{Nozzle Velocity} = \sqrt{2 \times \Delta h \times \eta}$$

Δh is the isentropic enthalpy drop through the nozzle, and

η is the nozzle efficiency.

The isentropic enthalpy drop was calculated using the nozzle inlet pressure temperature and the ambient (atmospheric) temperature.

For the cold cycle systems and for the hot cycle system, the pressure and temperature at the tip and the root were assumed equal. Little heat will be lost in the blades, and pressure loss in the blade due to friction will be offset by the centrifugal pumping action of the blade. For the system with tip burning, it was assumed that the air from the blade passed through a burner, heating the air to required temperatures before delivering it to the exhaust nozzle.

The parameter used for tip drive performance calculations were:

Tip Burner Efficiency - 95%
Tip Burner Pressure Loss - 10%
Exhaust Nozzle Efficiency - 95%

3.1.7 Tether Cable Loads

The load of the tether cable is a significant part of the total lift that must be generated by the aerial vehicle. For pumped fuel and for electrically powered systems, the cable loads at 50 knots were found to vary over a range of values equal to 50 to 100 percent of aerial vehicle empty weight. Typical values of top and bottom tensions are listed in Figure 9, which illustrates the cable deployment. The aerial platform must exert sufficient pull on the cable to maintain a spatial position within the boundaries of the station-keeping specification at all wind velocities up to 50 knots and also prevent the lower portion of the cable from fouling in the launch platform.

Cable loads, angles, and spatial shapes were calculated by a digital computer program previously developed by Kaman. For a selected cable design concept (either fuel line or electrical cable) the magnitude and direction of aerial vehicle pull required to meet the station keeping requirements was calculated over a wide range of fuel flow and electric power values. This cable load/power relationship was utilized in the iterative sizing process described above.

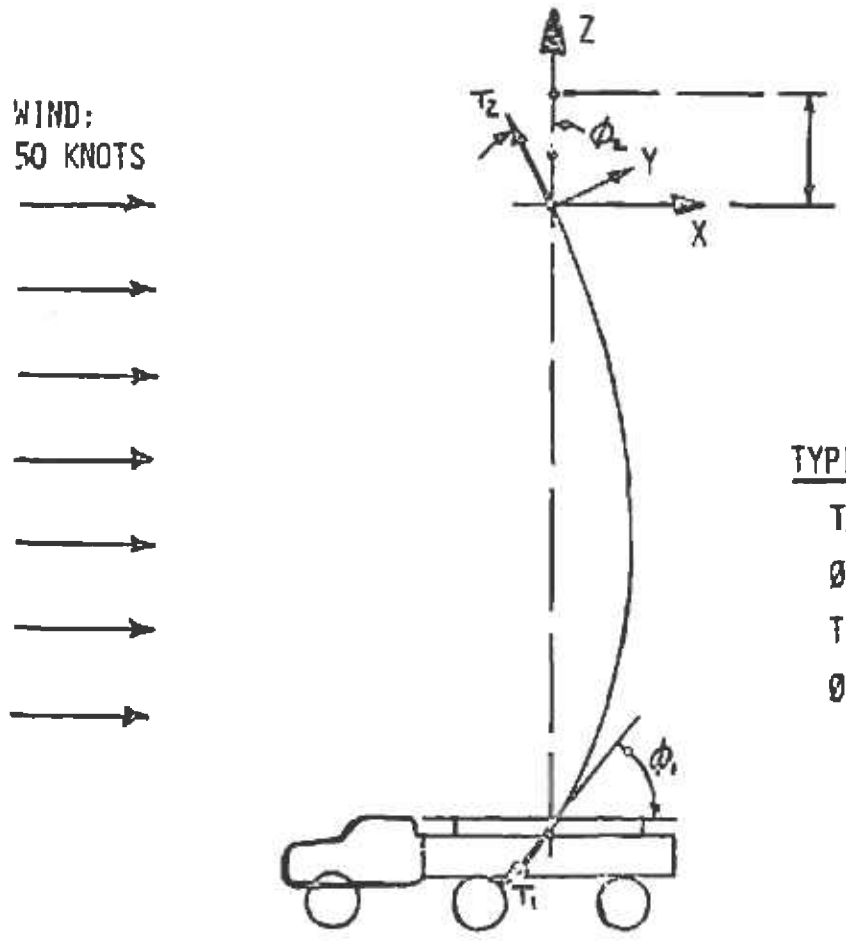

STATION KEEPING REQUIREMENTS

ΔZ:	± 50 FT
$\Delta X, \Delta Y$:	± 25 METERS
BASELINE:	1000 FEET

TYPICAL VALUES @ 50 KNOTS

T2	0.2 - 0.3 LB /FT
Ø2	35 DEGREES
T1	0.1 - 0.2 LB /FT
Ø1	45 DEGREES

Figure 9. Tether Cable Deployment.

If a low disc loading rotor is employed in the aerial platform, a simple cable management concept can be employed. Figure 10 illustrates the essential points. The cable load for any given station-keeping requirement increases with wind velocity. But rotor lift at constant horsepower also increases with wind over a wide range and an excess of lift exists up to some limiting velocity beyond which the station-keeping conditions cannot be met. The proper design is that rotor and that horsepower level that provides rapid erection, a tight cable during hover and transitional flow conditions, and sufficient cable pull to meet the station-keeping requirements at the specified maximum wind velocity. When the desired amount of cable is deployed, the winch should be locked and rotor power regulated within the air vehicle without attention from the ground.

The aerial vehicle sizing analysis calculated total horsepower requirements for a climb condition at zero wind and for station keeping at 1000 ft in 50-knot winds. The sizing data presented applies to the higher horsepower condition.

3.2 Pumped Fuel Systems

Aerial vehicle sizing data was generated for six basic concepts employing JP4/5 fuel pumped from the ground. These were:

Conventional Helicopter
- Single main and tail rotor with turboshaft/gearbox drive.

Single Lifting Rotor with Tip Drive by
- Ram Jet
- Pulse Jet
- Cold Air Cycle
- Cold Cycle with Tip Burning
- Hot Cycle

The analytical models used to calculate weight, drive system performance, cable loads, and fuel consumption are presented in Sections 3.2.1 through 3.2.4, and the aerial platform data is presented in Sections 3.2.5. Some additional concepts employing pumped fuel are discussed in Section 3.2.6 and alternate fuels are discussed in Section 3.2.7.

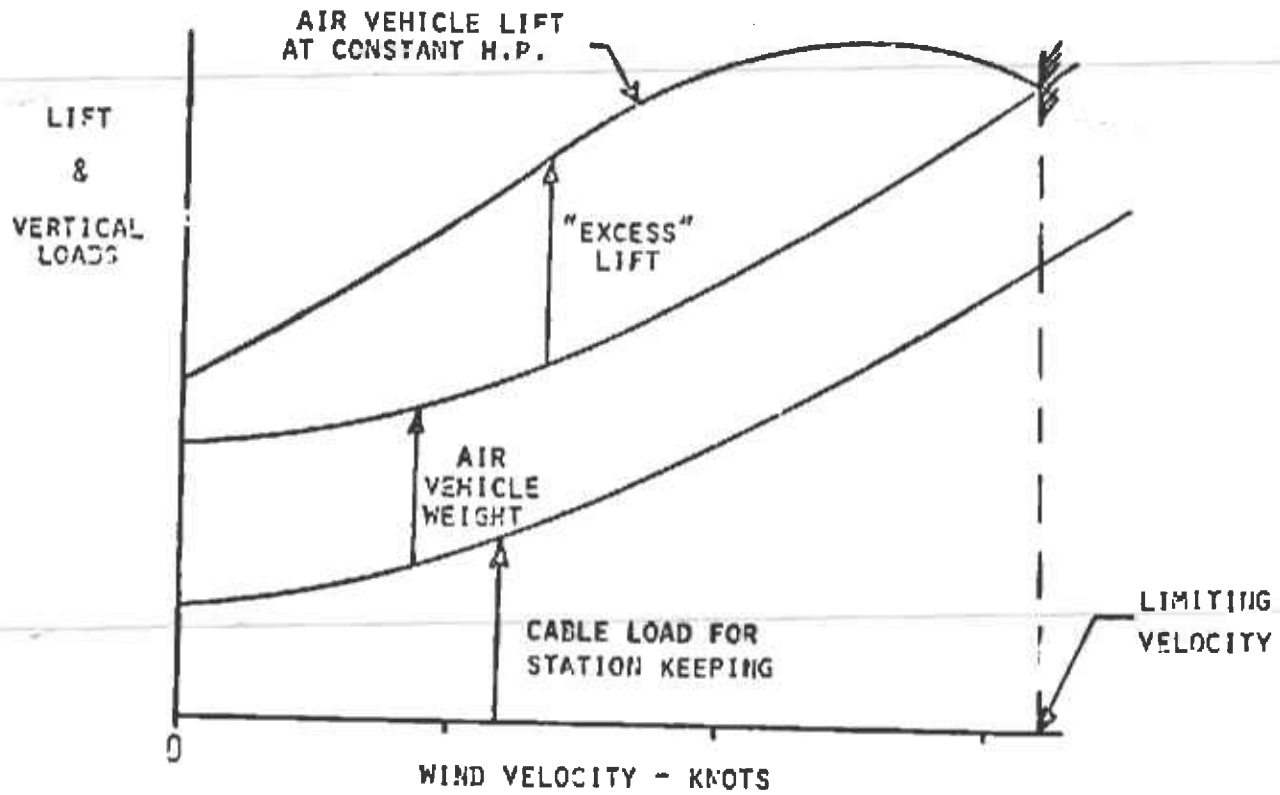

Figure 10. Lifting Performance of Tethered Rotary-Wing Vehicles.

3.2.1 Aerial Vehicle Weight Models

Table XI summarizes the weight models used in the study for pumped fuel systems. The weight of the lifting rotor for a conventional system was computed as a function of total blade area required, A_B.

$$W_{MR} = 2.6\ A_B^{1.27}$$

The formula is based on main and tail rotor data given in Reference 4 with adjustments for tail rotor weight. The lifting rotor weight equations for tip driven configurations include a weight increase factor for tubing, insulation, and heavier structure.

References 5 and 6 show a 20-percent weight increase for cold cycle tip nozzle driven rotors and a 35-percent increase for hot cycle driven rotors over shaft driven teetering rotors.

Tail rotor weight for the conventional concept is a function of power required, P, and main rotor tip speed, ΩR

$$W_{TR} = 25\ \frac{P}{\Omega R}$$

This equation is based on analysis of UH-1, UH-2C weight data, and Kaman drone designs.

Rotor drive weight for the conventional main/tail rotor gearboxes, drive shafts, lubrication systems, and auxiliary drive boxes was calculated as a function of lifting rotor torque, Q, in ft-lb.

$$W_D = 0.43Q^{0.72}$$

Several sources of transmission weight data were examined and showed good correlation with the model. For tip driven concepts, a weight allowance equal to 2.3 percent of rotor lift was made to cover gearboxes for mechanical yaw control and accessory drives. Data from the Hughes XV-9 and the Vertol study in Reference 6 support this allowance.

The weight of a basic turboshaft engine was calculated as a function of engine rated

$$W_{PP} = 4.67\ R^{0.63}$$

The equation was established from the logarithmic curve fit of actual engine weights shown in Figure 11. For cold cycle tip nozzle drive, an additional 40 percent weight was added to account for a separate shaft driven air compressor (as in the Dornier Keibitz) or an auxiliary load compressor stage as in Williams new WR-27 engine. For hot cycle systems, a 15-percent weight reduction is made to cover removal of the power turbine stage and output shaft.

TABLE XI. AIR VEHICLE COMPONENT WEIGHT MODELS
(PUMPED FUEL SYSTEMS)

	CONVENTIONAL MAIN/TAIL ROTOR	TIP DRIVEN SINGLE LIFTING ROTOR				
		RAM JET	PULSE JET	COLD CYCLE	COLD CYCLE/ TIP BURNING	HOT CYCLE
MAIN ROTOR	$2.6\ A_B^{1.22}$	$(1.2)2.6\ A_B^{1.22}$	$(1.25)2.6\ A_B^{1.22}$	$(1.2)2.6\ A_B^{1.22}$	$(1.2)2.6\ A_B^{1.22}$	$(1.35)2.6\ A_B^{1.22}$
TAIL ROTOR	$25\ P/(\Omega R)$	0	0	0	0	0
MAIN ROTOR DRIVE	$.43\ Q^{.72}$	.023 L	.023 L	.023 L	.023 L	.023 L
POWER PLANT	$4.67\ R^{.63}$	.15 R	.19 R	$(1.4)4.67\ R^{.63}$	$(1.4)4.67\ R^{.63}$	$(.85)4.67\ R^{.63}$
POWER PLANT INST.	.15 R	10	10	.15 R	.15 R	.15 R
FUEL SYSTEM	.09 F	.09F	.09F	.09 F	.09 F	.09 F
AIRFRAME	.13 W	.13 W	.13 W	.13 W	.13 W	.13 W
LANDING GEAR	.02 W	.02 W	.02 W	.02 W	.02 W	.02 W
MECH. FLT. CONTROLS	.015 W	.015 W	.015 W	.015 W	.015 W	.015 W
AFCS	$20.5+.0015L+.7L^{.5}$	20.5+....	20.5+....	20.5+	20.5+	20.5+ ....
ELECTRICAL	15	15	15	15	15	15
EQUIPMENT	10	10	10	10	10	10

W = VEHICLE GROSS WEIGHT (LB), F = RESERVE FUEL ON BOARD, L = MAXIMUM ROTOR LIFT AT ZERO WIND, (ΩR) = ROTOR BLADE TIP SPEED, A_B = TOTAL BLADE AREA (FT^2), P = POWER REQUIRED ON STATION (HP), Q = TORQUE REQUIRED ON STATION (FT-LBS), R = ENGINE RATED POWER (HP)

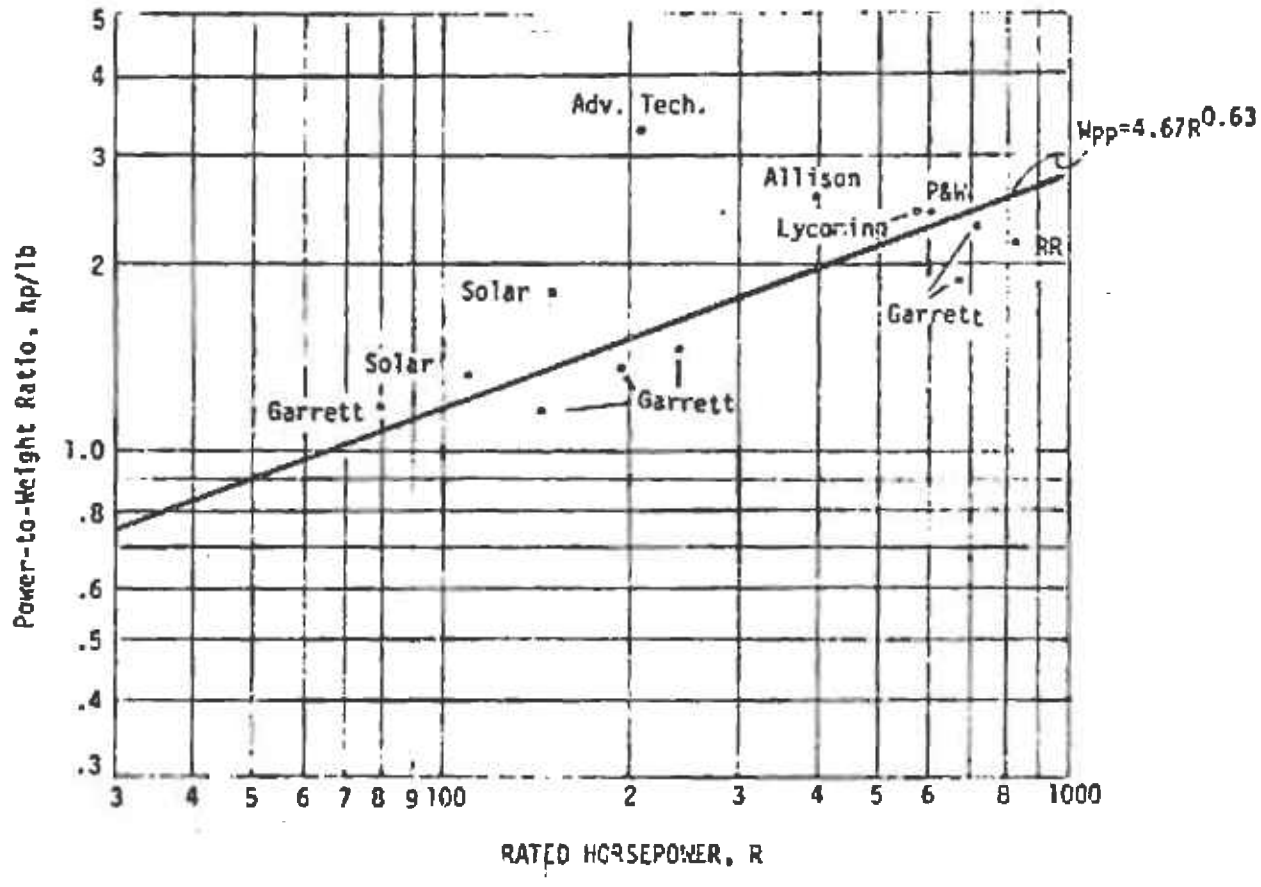

Figure 11. Aircraft Engine Weight Model.

Weight allowance formulae shown in Table XI for power plant installation, fuel system hardware, airframe, landing gear, and mechanical flight controls were based on extrapolations of data on existing helicopters down to the low gross weight range of the unmanned tethered platforms. All pumped fuel systems were sized with 15 minutes of fuel while on station.

The weight of the Automatic Flight Control System, AFCS, was computed as a function of lift, L.

$$W_{AFCS} = 20.5 + 0.0015\ L + 0.7L^{1/2}$$

This equation is based on autopilot designs utilized by Kaman on previous drone programs and includes allowances for attitude and cable angle sensors, AFCS electronics, cyclic pitch actuators, and AFCS power supply.

The final entries in Table XI are the weight allowances assumed for airborne electrical power generation and auxiliary equipment.

3.2.2 Rating of Power Plants

The rated power of the engine, R, at sea level, standard atmospheric conditions required by the weight models was calculated using the following relationship:

$$R = \frac{SHP}{\delta}\ [\ 1 - 2.08\ (\theta - 1)\ ]$$

where δ = pressure ratio at altitude

and θ = temperature ratio.

For the tip nozzle rotor systems, the rotor horsepower was related to an equivalent turboshaft engine rating to determine the weights of the engine and the installation allowance.

The equivalent compressor power required for a cold cycle rotor was calculated from the airflow relationships given in section 3.1.6. The results of these calculations are presented in Figure 12. The ratio of compressor drive power to rotor drive is plotted as a function of pressure ratio for cold cycle systems with and without tip burning. A pressure ratio of 3 was assumed to minimize power and fuel flow rate. This resulted in a power ratio of 2.5 for the cold cycle system and a power ratio of 1.0 for the system with tip burning.

These power ratios were used to determine the power rating of an equivalent turboshaft engine. The weight of the power plant and its installation could then be calculated from the weight models described in the previous section.

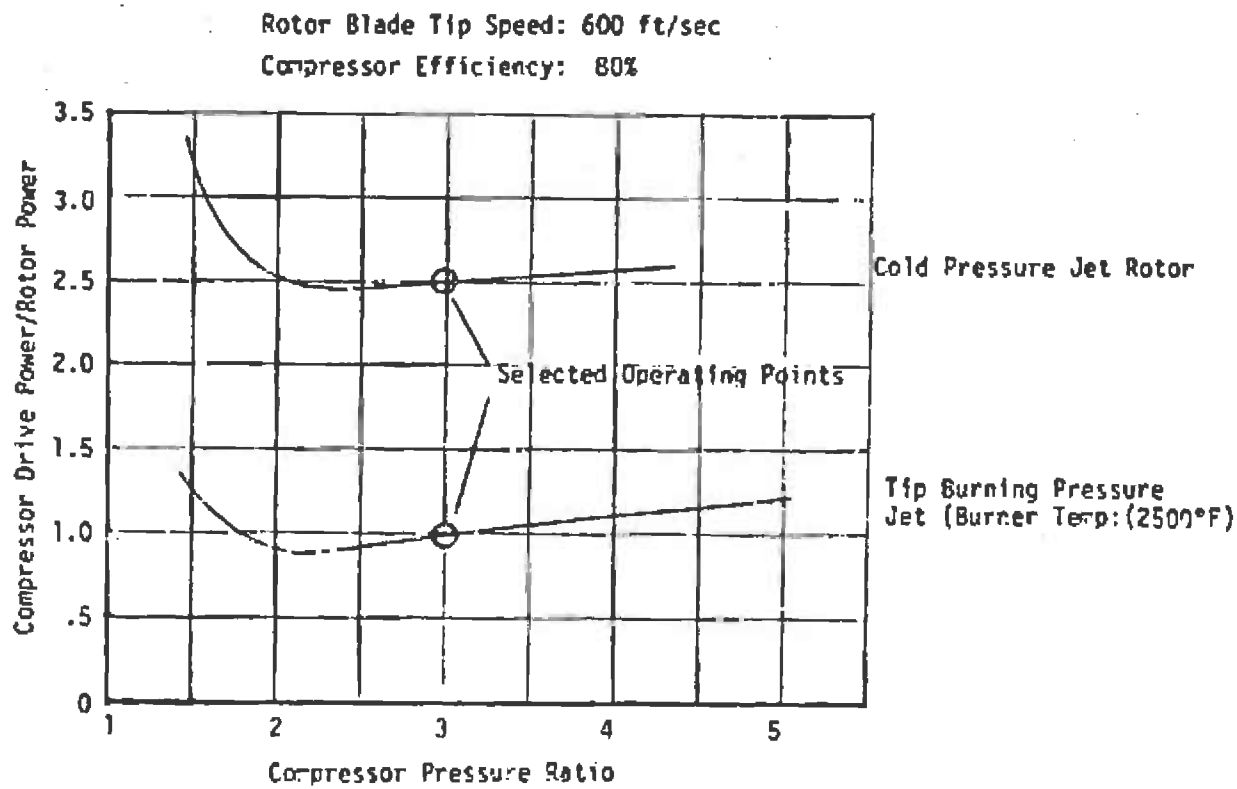

Figure 12. Equivalent Power Ratio of Cold Cycle Engines.

A similar calculation approach was adopted to determine the rated power of the gas generator for hot cycle systems. The results, plotted in Figure 13, show that the engine-power/rotor-power ratio is a function of engine specific power and rotor tip speed. The hot cycle systems were sized assuming a specific engine power of approximately 100 horsepower per pound per second of airflow. With the selected rotor tip speed of 600 ft/sec, the power rating of the equivalent turboshaft engine is approximately 2.1 times the required rotor power.

In both the pulse jet and ram jet systems the power rating used for calculating jet weights includes rotor power and accessory drive requirements with an adjustment to sea level standard day conditions.

3.2.3 Fuel Consumption

The performance of aircraft turboshaft engines at sea level standard day is shown in Figure 14. The specific fuel consumption, sfc, in pounds per hour per horsepower at rated horsepower is plotted vs rated horsepower for a number of engines. For large engines, 400 to 2000 horsepower, the rated power fuel flow of current technology engines can be approximated by the following equation:

$$sfc = 1.136\ R^{-0.105}$$

For engines below 400 horsepower, the following relation was used in the study.

$$sfc = 6.972^{-0.405}$$

Both mathematical models are plotted in Figure 14 together with actual data. The fuel consumption of turboshaft engines at partial power or at other than sea level, standard day conditions, is shown in Figure 15.

The fuel consumption relationship given above was used for turboshaft gear-driven configurations and for the cold and hot cycle systems with the equivalent engine power rating. For the system with tip burning, the total fuel flow was calculated as a function or rotor power required and compressor pressure ratio. The results are plotted in Figure 16 and with a compressor pressure ratio of 3, the specific fuel consumption with tip burning is approximately 2.3 lb/hr/hp.

Fuel consumptions for ram and pulse jet systems were based on thrust specific fuel consumptions of 5.75 (lb per hour per lb of thrust) and 6.0 respectively. These values were estimated by the Marquardt Company for the rotary-wing platform operating conditions.

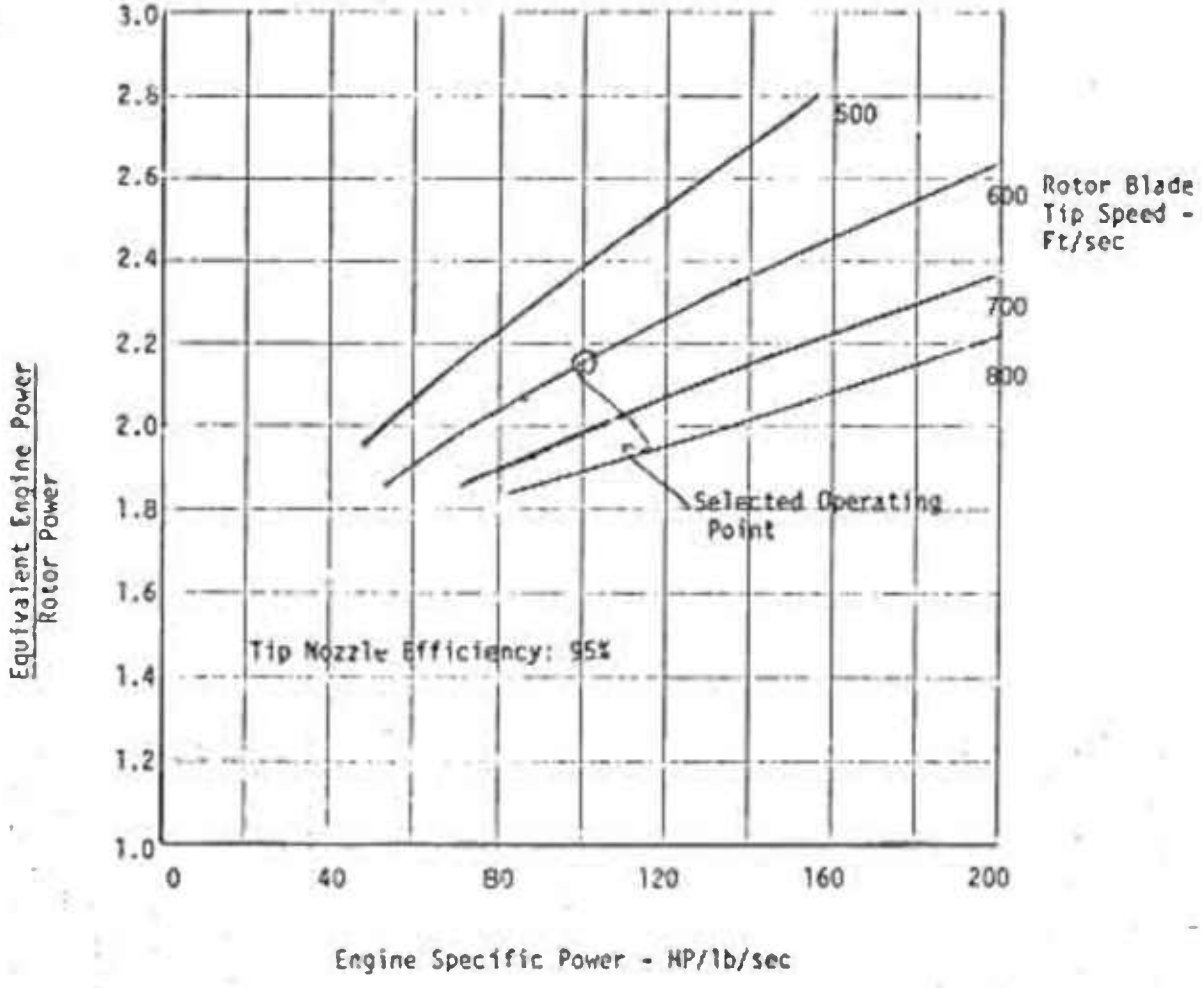

Figure 13. Equivalent Power Ratio of Hot Cycle Engine.

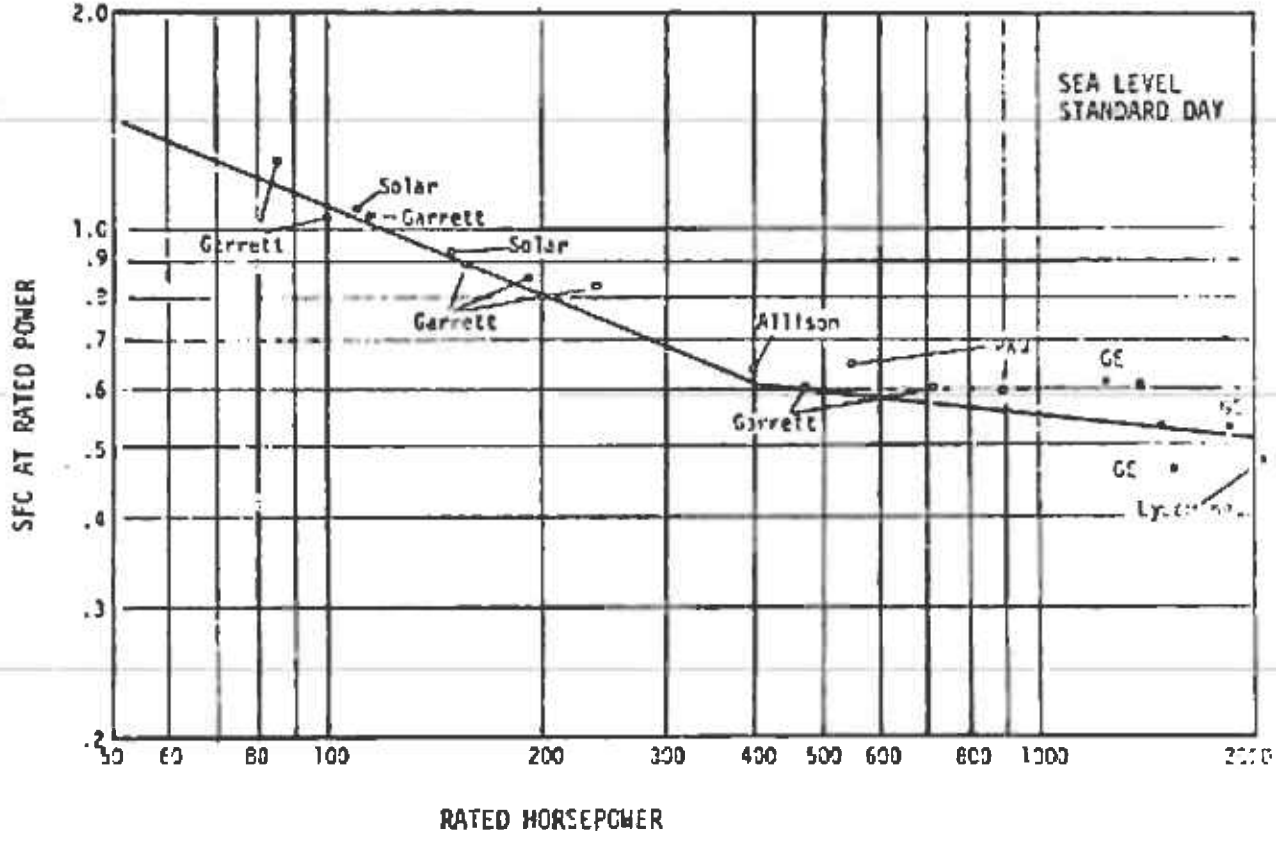

Figure 14. Fuel Consumption of Aircraft Engines.

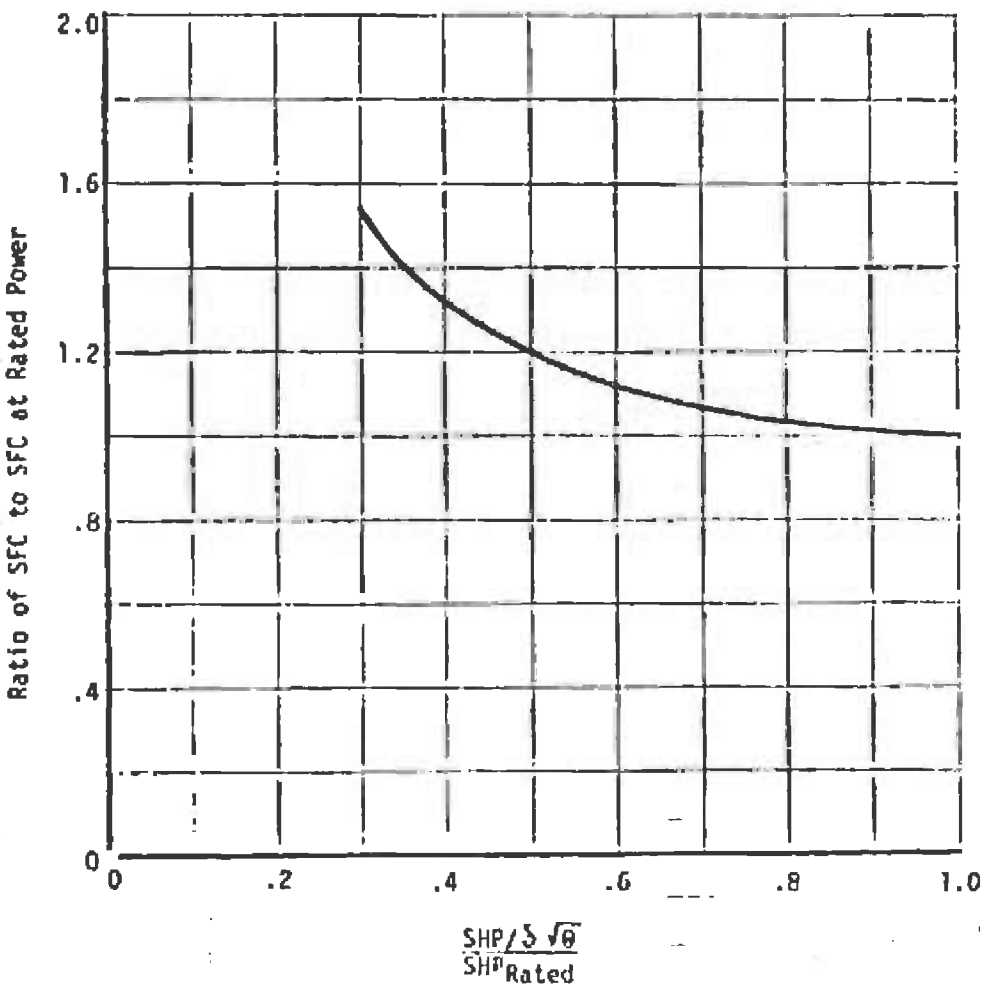

Figure 15. Variation of Specific Fuel Consumption With Power Level.

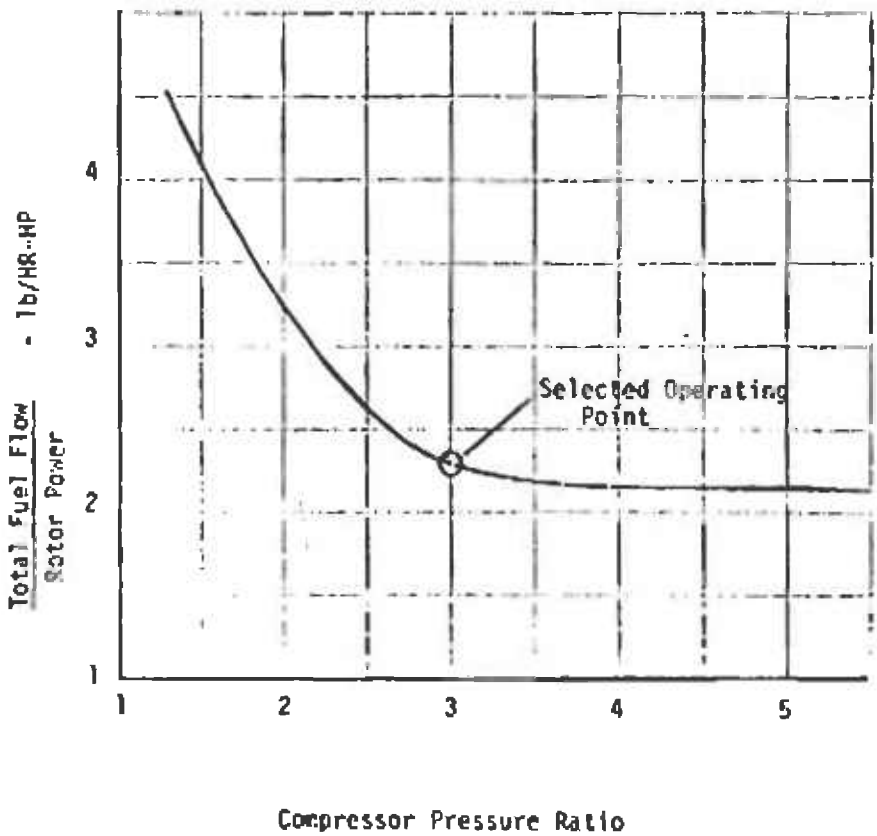

Burner Temp: 2500°F
Rotor Blade Tip Speed: 600 ft/sec
Compressor Efficiency: 80%

Figure 16. Fuel Consumption of Tip Burning Cold Cycle System.

3.2.4 Tether/Fuel Line Design

The tether cable concept assumed for the sizing study is shown in Figure 17. The fuel line is a nylon tube with a pressure winding of polyester fibers. Two RG/U161 coax data cables are placed inside the fuel hose. The cable tension loads are taken by a woven wrap of Dacron and the outer protective jacket is made of nylon.

Cable sizes and weights were determined as a function of fuel flow assuming JP-4 fuel with a specific gravity of 0.77 and a viscosity at 95°F of 0.90 centistokes. The tension member was sized assuming a maximum cable load of 2000 pounds. The internal diameter of an unobstructed fuel line was calculated for various flow rates and pumping pressures. This data, shown in Figure 18, was then used to compute dimensions and weights of the selected design accounting for the coax data cables and all other elements. The results are shown in Figures 19 and 20 for pumping pressures of 1000 and 1500 psi.

The tether cable loads at 50 knots were computed at a number of fuel flow values using the computer program described in Section 3.1.4. These loads, which are in the proper functional form for the iterative air vehicle sizing process, are plotted in Figure 21 for pumping pressures of 1000 and 1500 psi. The aerial vehicles were sized for 1000 psi fuel lines to minimize the ratings of pumping equipment.

3.2.5 Aerial Vehicle Sizes

The primary physical characteristics of the aerial vehicles are listed in Table XII. All configurations are sized to meet all the performance specifications. For all pumped fuel systems examined, the horsepower rating was determined by the climb condition at zero wind. Table XIII shows the breakdown of air vehicle weight, the rotor data, and the cable weight and diameter required. Figures 22, 23 and 24 show representative designs, to the same scale, of the conventional helicopter, the tip jet, and the cold cycle system.

Empty weights of the pumped fuel concepts vary from 264 pounds for the ram jet concept to 721 pounds for the cold cycle system, but vehicle gross weight plus cable load at 50 knots only varies from about 850 to 1200 pounds for the concepts studied. Rotor diameters and rotor horsepower also show a relatively small variation, but fuel flows vary from 89 pounds/hour for the conventional turboshaft driven concept, to 184 pounds/hour for the cold cycle, up to 366 pounds/hour for the tip mounted pulse jet. Further evaluation of the concepts is presented in Section 8.

3.2.6 Alternate Pumped Fuel Systems

Tables XII and XIII provide physical characteristics on six specific concepts for the aerial platform utilizing fuel pumped from the ground to obtain the specified endurance of 16 hours. The physical characteristics

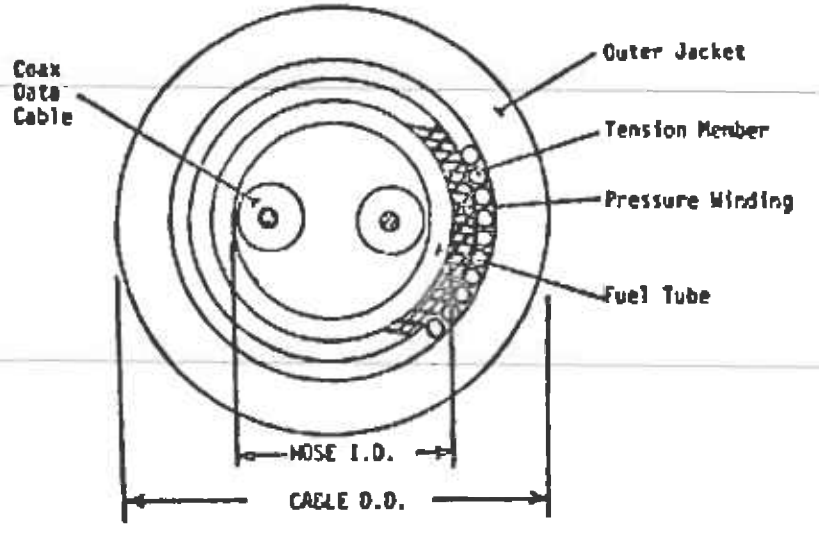

CABLE ELEMENT	MATERIAL	THICKNESS (in.)	WEIGHT
Outer Jacket	Nylon	.030	Variable
Tension Wrap	Dacron	.015	"
Pressure Winding	Polyester	.045	"
Fuel Tube	Nylon	.030	"
Coax Cable	(RG/U 161)	.082	.015 lb/ft

Figure 17. Typical Tether Cable For Pumped Fuel Systems.

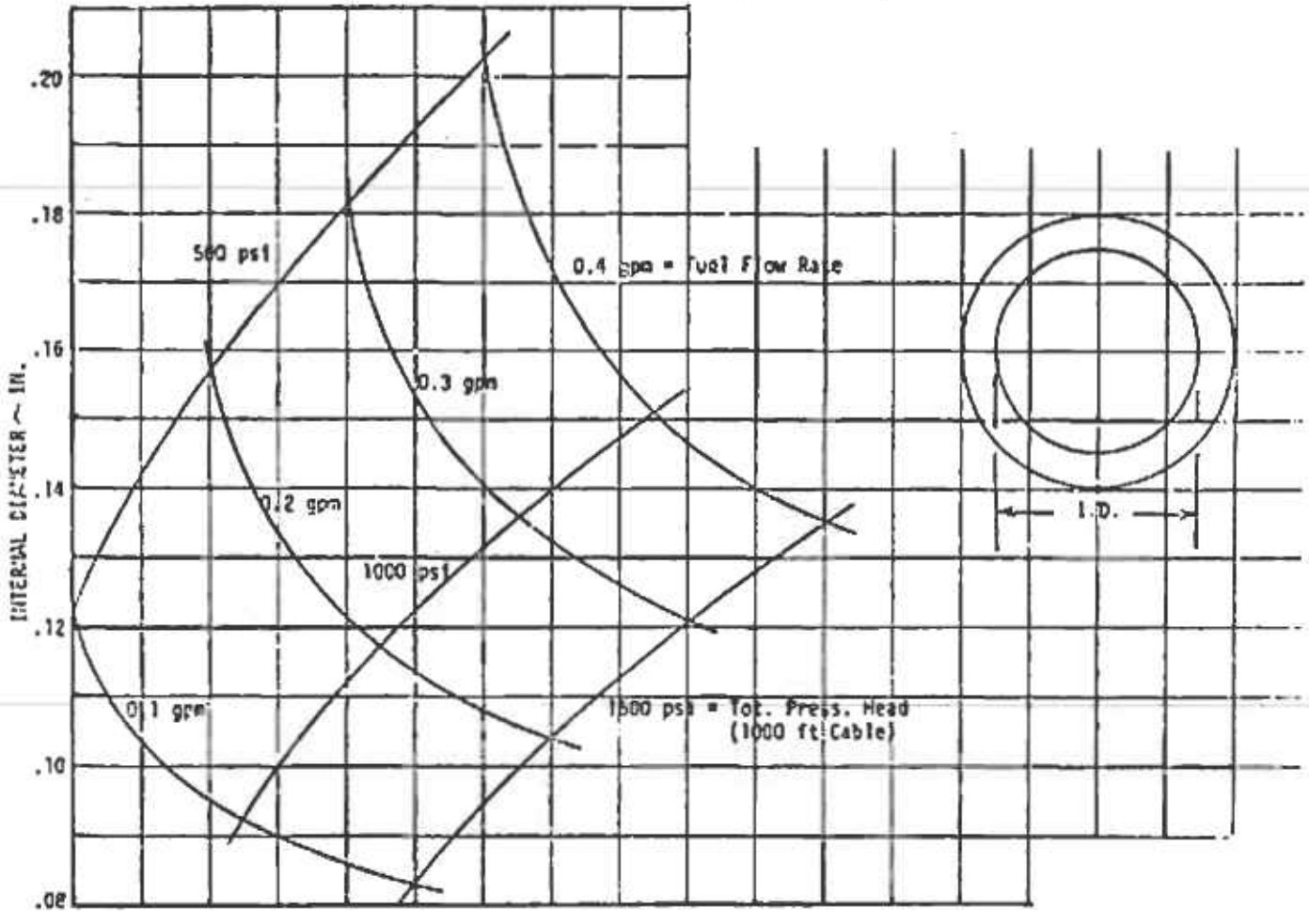

Figure 18. Fuel Line Design Parameters.

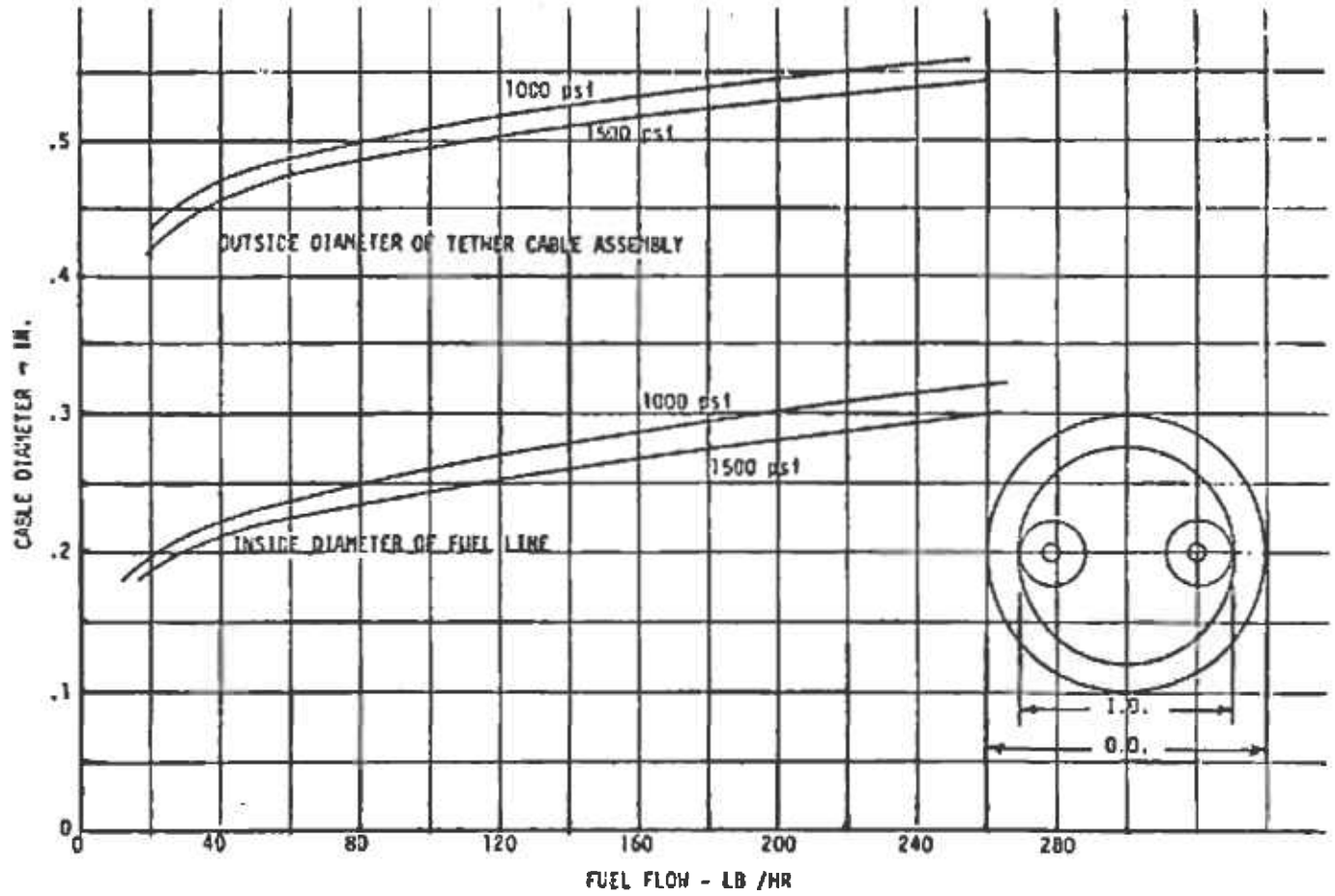

Figure 19. Tether Cable Diameter - Pumped Fuel.

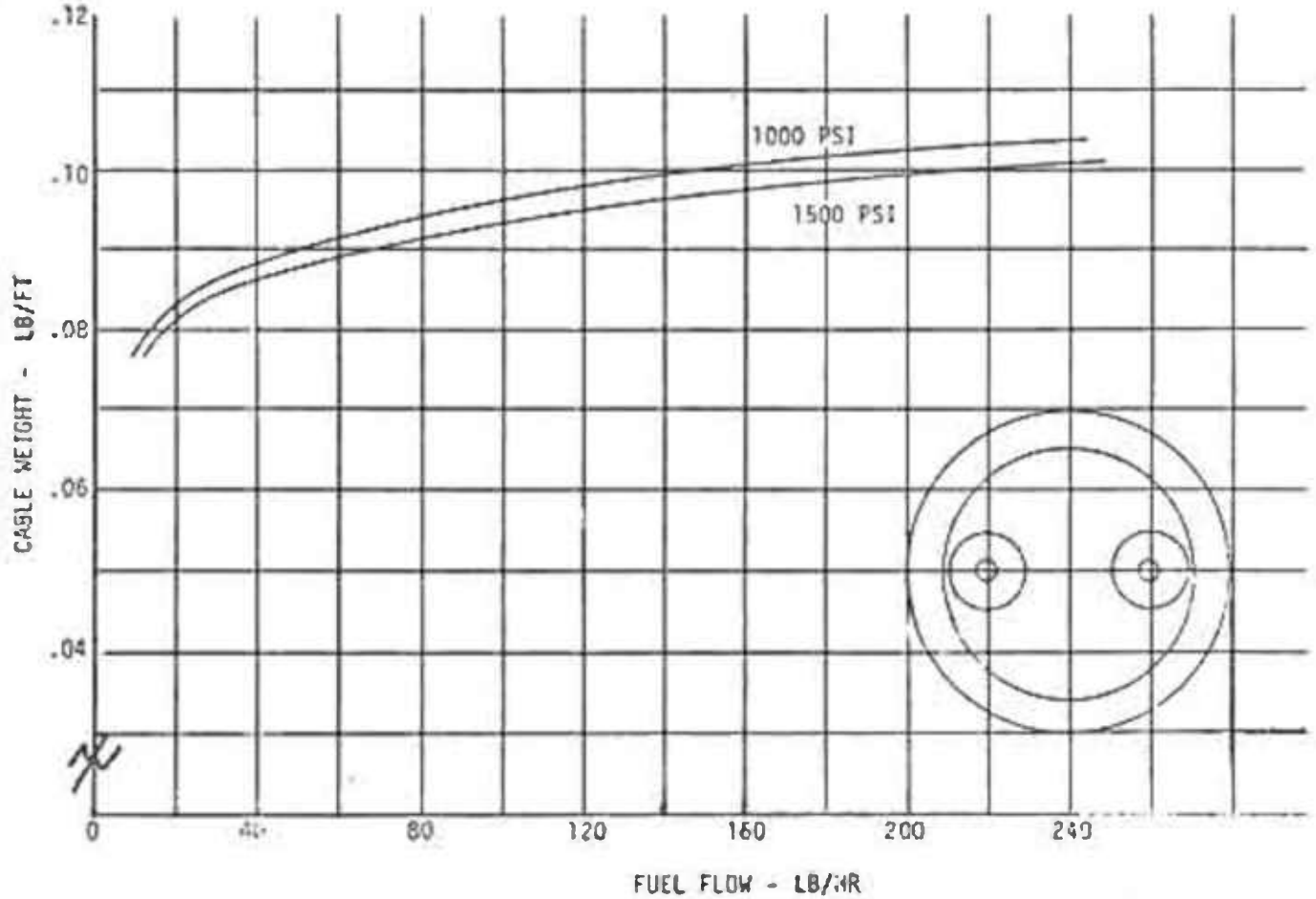

Figure 20. Tether Cable Weight - Pumped Fuel.

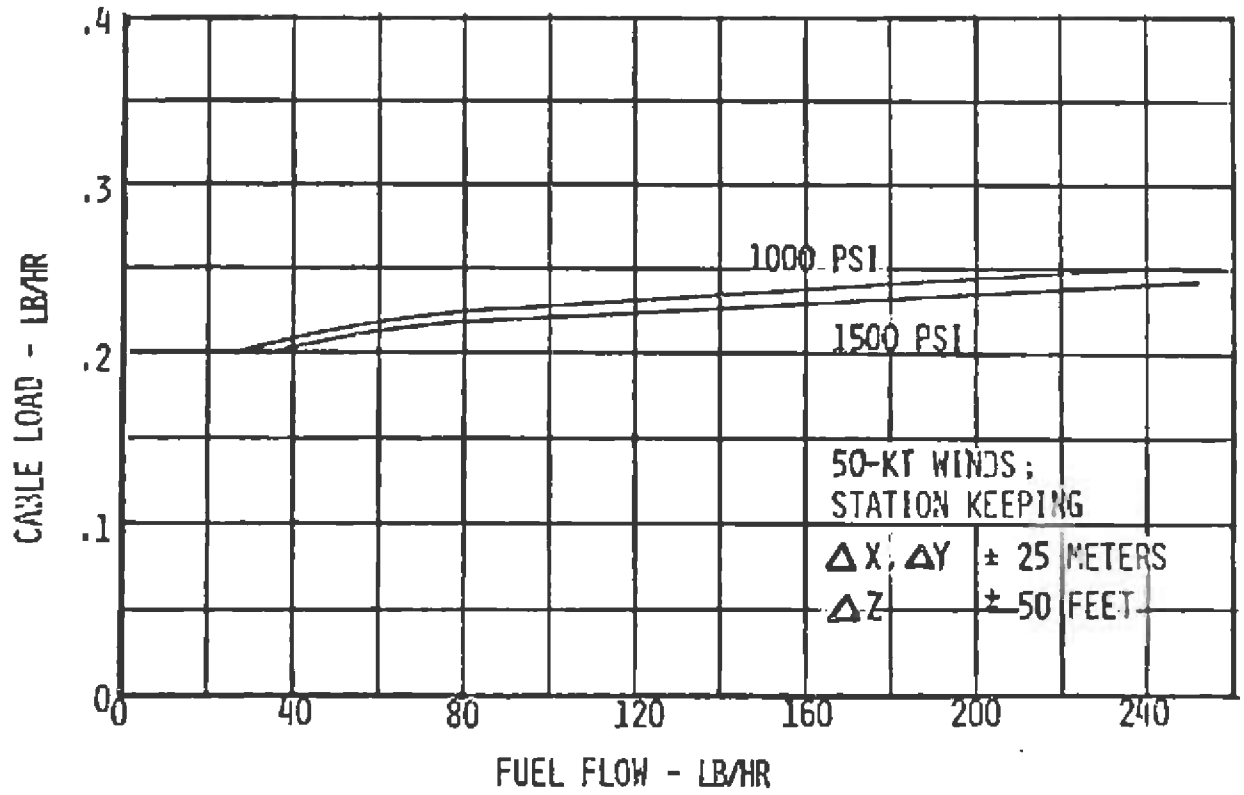

Figure 21. Tether Cable Load at Air Vehicle - Pumped Fuel.

TABLE XII. AERIAL VEHICLE SIZES (PUMPED FUEL SYSTEMS)

	CONVENTIONAL DRIVE	TIP DRIVEN				
		RAM JET	PULSE JET	COLD CYCLE	TIP BURNING	HOT CYCLE
EMPTY WT (LB)	391	264	278	721	445	465
FUEL LOAD (LB)	22	86	92	46	59	36
PAYLOAD (LB)	200	200	200	200	200	200
GROSS WT (LB)	613	550	570	967	704	701
CABLE LOADS(LB)						
0-WIND CLIMB	200	213	214	206	210	204
50 KNOT WIND	237	283	287	254	264	247
ROTOR DIA. (FT)	16.1	15.6	15.8	19.3	17.1	17.0
ROTOR POWER(HP)	97	86	88	130	102	101
FUEL FLOW(LB/HR	89	343	366	184	237	142
ENGINE RATING(HP)	131	-	-	440	139	288

TABLE XIII. AERIAL PLATFORM DATA - PUMPED FUEL CONCEPTS

	Conventional	Ram Jet	Pulse Jet	Cold Cycle	Cold Cycle with Tip Burning	Hot Cycle
Empty Weight (lb)	391.0	264.4	278.5	720.7	444.5	465.2
Main Rotor	48.0	55.2	59.6	90.9	67.4	74.1
Tail Rotor	4.0	0.0	0.0	0.0	0.0	0.0
Drive System	48.7	17.5	18.0	27.0	21.0	20.8
Power Plant	100.7	17.4	22.5	302.2	146.0	140.6
Power Plant Inst.	19.6	10.0	10.0	65.9	20.8	43.2
Fuel System	2.0	7.7	8.2	4.1	5.3	3.2
Airframe	79.8	71.4	74.0	125.6	91.4	91.0
Landing Gear	12.3	11.0	11.4	19.3	14.1	14.0
Mech Flt Controls	9.2	8.2	8.5	14.5	10.5	10.5
Auto Flt Controls	41.7	41.0	41.3	46.2	43.0	42.9
Electrical	15.0	15.0	15.0	15.0	15.0	15.0
Aux. Equip.	10.0	10.0	10.0	10.0	10.0	10.0
Rotor Data						
Diameter (ft)	16.1	15.6	15.8	19.3	17.1	17.0
Solidity	0.054	0.055	0.055	0.054	0.054	0.054
RPM	712	919	507	593	672	676
No. of Rotors/Blades	1/2	1/2	1/2	1/2	1/2	1/2
Cable Data						
Diameter (in)	0.505	0.578	0.580	0.540	0.560	0.525
Weight (lb/ft)	0.095	0.108	0.108	0.101	0.105	0.099

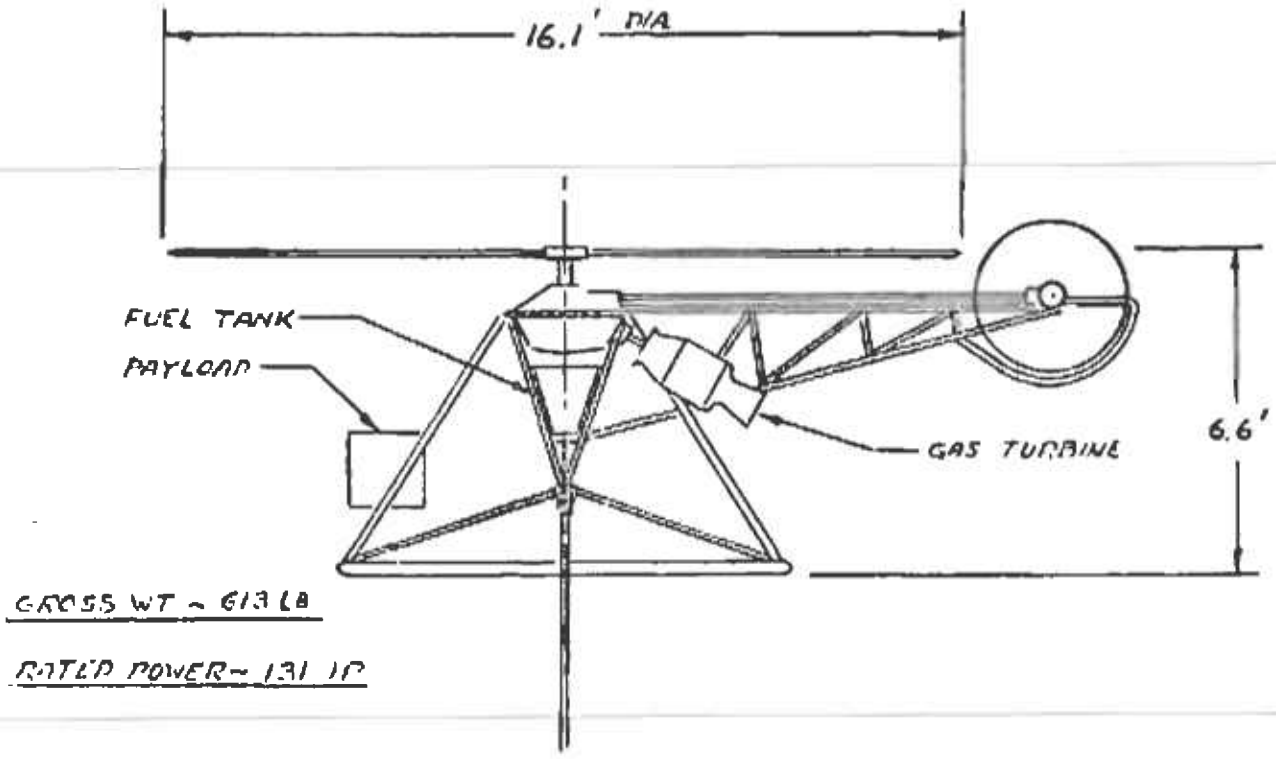

Figure 22. Conventional Turboshaft Powered Helicopter.

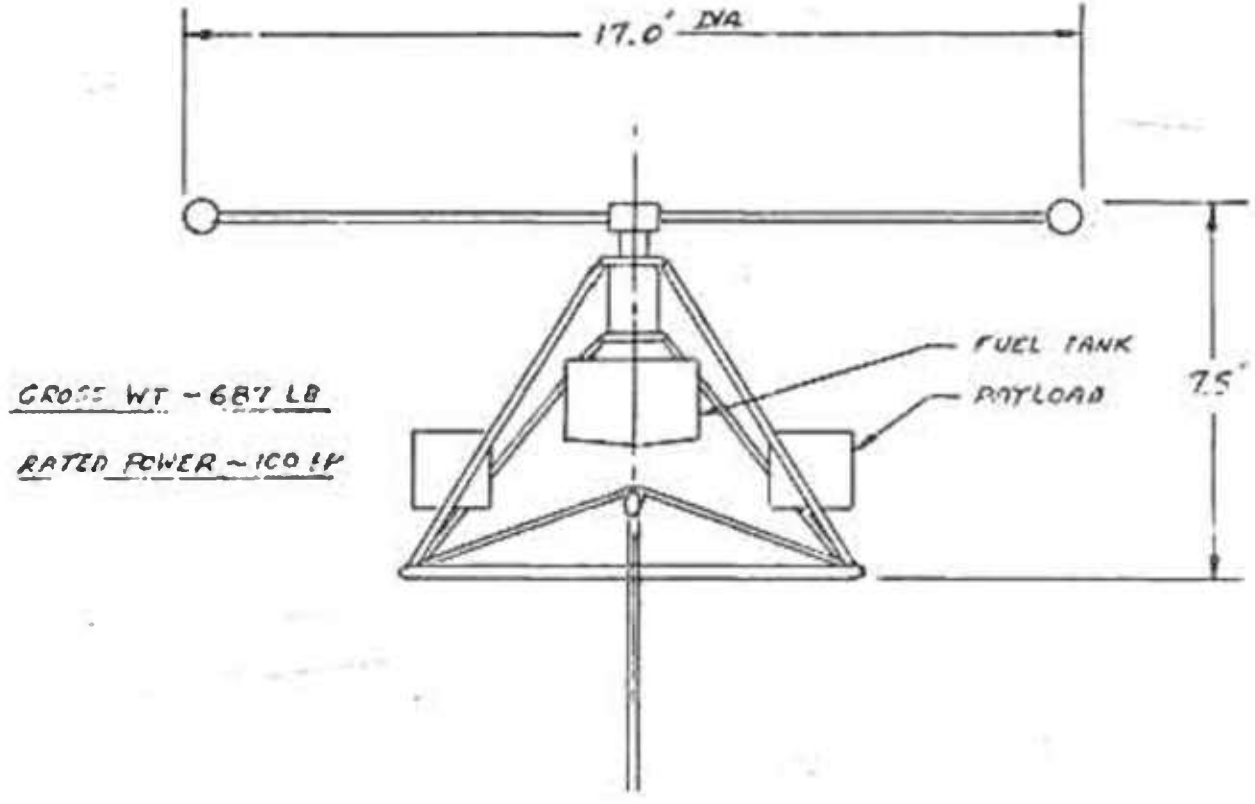

Figure 23. Tip Ram Jets.

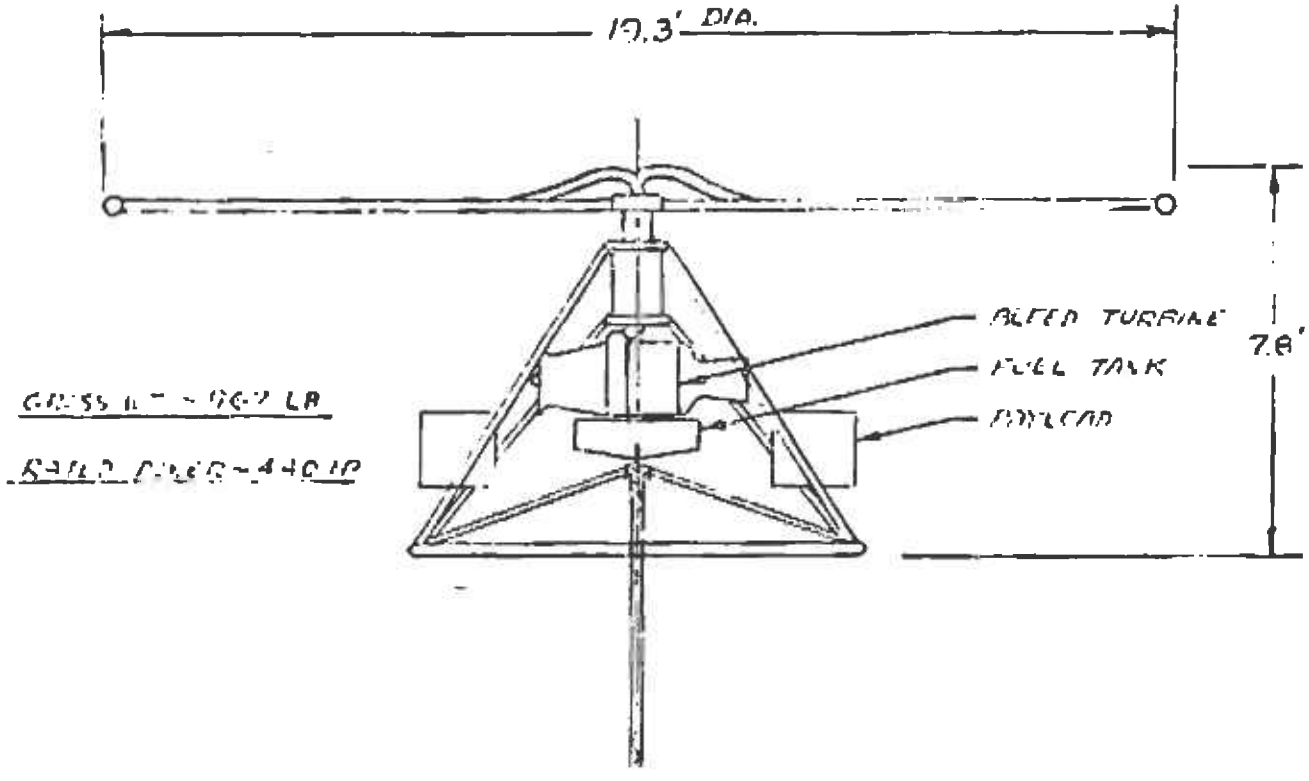

Figure 24. Turbine Powered Cold Cycle Tip Nozzles.

of certain other system concepts can be inferred by comparing component characteristics. For turboshaft engine and gear-driven rotor concepts, the differences in total system characteristics will stem from differences in rotor system lifting and propulsive efficiency only. Therefore, the platform characteristics for coaxial, synchropter, and tandem rotor systems driven by turboshaft engines and gearboxes (concepts D, E, and F in Table VII) can be estimated by comparing their rotor efficiencies with that of the conventional main/tail rotor system. It is generally accepted that these efficiencies are not significantly different and the aerial platforms will all be similar in size and require about the same size engine as the conventional platform described in Tables XII and XIII. This fact can be verified by examining the data in Table XV on electrically powered concepts. There, a direct comparison is made of the conventional, coax, synchropter and tandem concepts. Gross weights vary less than 5 percent, and total horsepower varies about 10 percent.

Table VIII lists bleed air and auxiliary compressors (concepts F and G) as candidate power plants for cold cycle tip driven systems. The data presented in Table XII does not distinguish between these concepts and is considered applicable to aerial platforms with oversized bleed air machines, shaft-driven auxiliary compressors, or integral compressors specifically designed for the tip nozzle air load. The choice of concept depends on the options available at the time production is contemplated. Given a choice, an integral compressor, tailored to the tip nozzles air load requirements, would always be selected because of weight, cost, reliability, and performance advantages.

Other concepts considered were the use of airborne rotary and reciprocating internal combustion engines, (concepts D and E, Table VIII), in lieu of the aircraft turboshaft engines. The main advantage of these engines over turbines is their low cost.

In the 100-horsepower range, a turbine may cost 6 to 10 times as much as a drive system employing an internal combustion engine. Fuel consumption at part power also greatly favors internal combustion engines. There are, however, a great many disadvantages to the use of internal combustion engines for the tethered platform. The most significant items, perhaps, are their lower reliability, shorter life and higher maintenance. The danger of fire is, of course, significantly higher with aviation gasoline, but separation of the ground fuel supply and careful design of the platform pumping system should be able to prevent a catastrophe.

The internal combustion engines are noisy and heavy. In addition, to higher basic engine weight they require rotor clutches for starting and cooling a system. These components degrade system reliability. Finally, the reciprocating engine has a high vibration level.

In the family of pumped fuel systems employing shaft-driven rotors or cold cycle reaction driven rotors, the aircraft turboshaft engine must be chosen over internal combustion engines for all missions involving long periods of operation because of its superior operational and maintenance characteristics. If the tethered platform is employed on missions where total life-time on station is low and risk of loss is high, then the low cost of the internal combustion engine may warrant further consideration.

The jet flap concept (concept k in Table VIII) can be considered a variation of the basic cold cycle concept that has been analyzed. The potential use of high-pressure air to drive a rotor and to alter local airflow distribution, thus controlling cyclic pitch , has been demonstrated. Insufficient data was available to establish a special weight and performance model for this concept and, therefore, the resultant aerial platform characteristics must be projected from the basic cold cycle system data. Propulsion efficiency of the jet flap is most likely lower than that of tip nozzles, and rotor blades would probably be heavier. Some compensating reduction in weight would stem from a simpler mechanical flight control system. All-in-all, the jet flap system would be very close to the projected cold cycle system with a slightly larger engine and increased fuel consumption. However, the jet flap is still undergoing exploratory development and should not be considered as a primary candidate for a tethered platform at this time. A similar concept for rotor control is the circulation controlled rotor being developed by Kaman under Contract N00019-73-C-0429 to the U.S. Navy. But like the jet flap, it must show that its promises can be fulfilled in an operational system.

3.2.7 Alternate Fuels

The use of aviation gasoline in internal combustion engines has been discussed above. Aviation gasoline has also been used in turboshaft engines in emergencies. However, the most probable alternatives to standard Army aviation JP-4 turbine engine fuel are JP-5 and diesel oil.

JP-5, used by the Navy, has a higher flash point than JP-4 but cannot be used at fuel temperatures below -40°F. (JP-4 can be used to -65°F.) The energy per pound of JP-5 is essentially the same as JP-4. Most turbine engines burn JP-4 or JP-5 without difficulty. Sustained operation with JP-5 at partial power can lead to coking (excessive carbon deposits) in the combustion section.

Diesel oil has been used in emergencies in aircraft turbines and some Lycoming turbines have been qualified with it. Energy per pound is very close to JP-4 and presumably any engine can use it with appropriate changes to the fuel controls. Like JP-5 it is limited to -40°F.

It appears, therefore, that either JP-5 or diesel oil is an alternative to standard Army JP-4. From a logistics point of view, diesel oil is attractive. Assuming diesel powered trucks to transport the aerial platform and its ground control station and diesel driven generators for ground station electrical power, all engines could draw fuel from a single tank of diesel oil. For environments below -40°F, the oil going up the tether line would have to be heated.

A brief examination was made of natural gas to see if there were any advantages to this form of energy for tethered platforms. Natural gas, or butane or propane, has a heating value of approximately 15 percent higher than JP-4. If the fuel is pumped in the gaseous state, pumping pressures over 3000 psi would be required with a fuel line diameter of 0.5 inch. The tether cable would therefore be heavier and larger than the equivalent line carrying JP-4 fuel, the air vehicle lift would be higher, and a larger engine would be required. Therefore, the benefit of the higher heating value per pound of natural gas would be largely negated.

Natural gas could not be pumped to the aerial platform in liquid form without introducing a significant problem in tether cable design. Natural gas stored at one atmosphere must be kept at minus 260°F to maintain a liquid state. Even with a pumping pressure of 1000 psi the cable would be extremely cold and it may not be possible to fabricate a cable with suitable strength and flexibility.

3.3 Electric Power Systems

Aerial platform data was generated for six concepts powered by electrical energy supplied from the ground via the tether cable. All concepts utilized airborne electric motors and, except for the high-speed fans, gearboxes to drive the lifting rotors. The mathematical process was identical to that described above for pumped fuel systems, and similar data was generated for the candidate concepts. The following discussion is restricted to weight and performance models that are significantly different for the electrical concepts or were not described previously.

3.3.1 Air Vehicle Weight Models

The weight models for the electrical systems are listed in Table XIV. The rotor weights for the coaxial and synchropter concepts were computed assuming a single rotor with four blades. For the tandem, the weight was calculated assuming two 2-bladed rotors. Weights for the multifan and ducted fan were calculated assuming a constant weight per fan power ratio.

Gearbox and rotor shaft weight was computed on a per-rotor-torque basis with a 15-percent penalty over conventional gearbox weight for longer shafts and some duplication of parts.

3.3.2 Air Vehicle Motor Characteristics

The weight of the airborne elertric motor is calculated as a function of motor power.

$$W_M = 2.73\ P^{0.764}$$

This relationship is plotted in Figure 25 together with actual or estimated weights provided by motor manufacturers.

Previous studies have shown that induction motors are well suited to the speed/load requirements of lifting rotor systems. Aerial platform data was calculated assuming the same type motor and power system for each concept.

Four pole induction motors with 3-phase 400 H_z power were assumed giving a no load speed of 12,000 rpm. Integral lubrication and cooling systems and a high-speed reduction gearbox were assumed and are included in the motor weight model. Typical design efficiency was estimated by motor manufacturers at 95 percent. Power factors are 0.88.

Power is transmitted from the ground at 2200 volts to keep cable diameters small and thus limit cable loads in high winds.

The above values are not necessarily optimum for electric tethered platforms but are representative of the current state of the art, and provide

TABLE XIV. AIR VEHICLE COMPONENT WEIGHT MODELS (ELECTRICAL POWER SYSTEMS)

	CONVENTIONAL	COAX	SYNCHROPTER	TANDEM	MULTIPLE FANS	DUCTED FAN
LIFTING ROTOR(S)	$2.6\ A_B^{1.22}$	$2.6\ A_B^{1.22}$	$2.6\ A_B^{1.22}$	$(3)(2.6)(A_B/2)^{1.22}$	$3(P/8)$	$.3\ P/2$
TAIL ROTOR	$.25\ P/(\Omega R)$	0	0	0	0	0
ROTOR DRIVE	$.43\ Q^{.72}$	$(2)(.15)(.43)(Q/2)^{.72}$	$(2)(1.15)(.43)(Q/2)^{.72}$	$(2)(1.15)(.43)(Q/2)^{.72}$	0	0
MOTOR	$2.73\ P^{.764}$	$2.73\ P^{.764}$	$2.73\ P^{.764}$	$2.73\ P^{.764}$	$(8)(3.02)(P/8)^{.764}$	$(2)(3.02)(P/2)^{.764}$
MOTOR INSTALLATION	$.03\ P$	$.03\ P$	$.03\ P$	$.03\ P$	$.03\ P$	$.03\ P$
AIRFRAME	$.12\ W$	$.13\ W$	$.13\ W$	$.13\ W$	$.17\ W$	$.16\ W$
LANDING GEAR	$.02\ W$	$.02\ W$	$.02\ W$	$.02\ W$	$.01\ W$	$.02$
MECH. FLT. CONTROLS	$.015\ W$	$.03\ W$	$.019\ W$	$.025\ W$	0	$.012\ W$
AFCS	$20.5+.0015L+.7\sqrt{L}$	$20.5+\ldots$	$20.5+\ldots$	$20.5+\ldots$	$20.5+\ldots$	$20.5+\ldots$
ELECTRICAL GENERATOR	15	15	15	15	15	15
EQUIPMENT	10	10	10	10	10	10

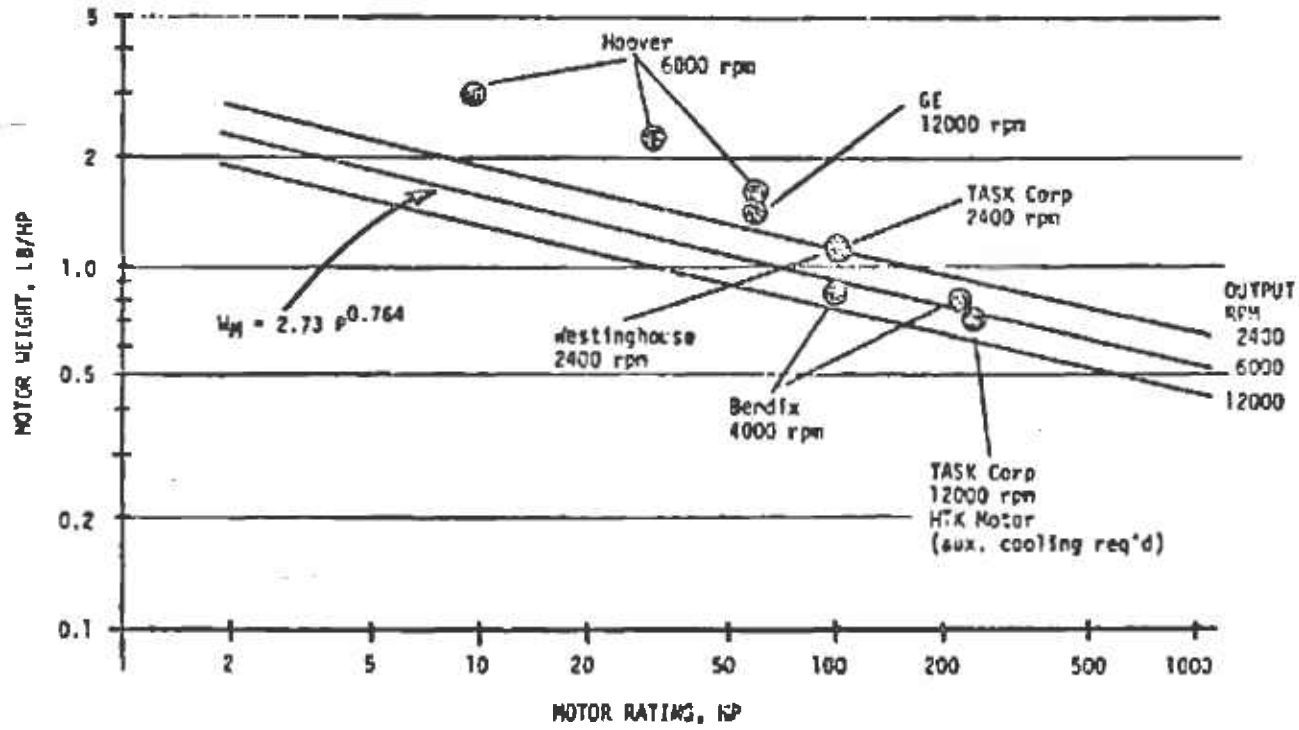

Figure 25. Weight of Electric Motors.

a sound basis for comparing electric systems to other platform concepts. If an electrical power concept is selected for a given mission, electrical power parameters should be selected carefully to minimize overall system cost.

3.3.3 Electric Tether Cable Design

Figure 26 shows the tether cable configuration assumed for air vehicle sizing purposes. Tension loads are carried by a central cable of stranded steel sized to a maximum load of 2000 pounds. The three-phase power conductors were sized to a maximum surface temperature of 150°F (at 95°F ambient), and cable diameters and loads were computed for copper and aluminum conductors. Conductor insulation was sized to 2300 volts line-to-line with a burn-through safety factor of 2.5. Silicone rubber was assumed for its good high-temperature characteristics and at 400 volts/mil, a thickness of 15 mils should be adequate.

Three coaxial data cables were utilized in the design to provide a symmetrical seven-strand lay. This will minimize internal friction and wear due to cable flexing and winching loads. The third position could be filled with any member with good mechanical properties, but the use of a third coaxial data cable would provide flexibility or redundancy in data transmission to and from the aerial platform

The weight (per foot) and diameter of the cable assembly was calculated over a range of transmitted power levels using total temperature rise as a criterion. The results are shown in Figures 27 and 28 as a function of airborne motor horsepower.

Total cable load at the aerial platform is shown in Figure 29. Aluminum conductors were assumed for aerial platform sizing.

3.3.4 Aerial Vehicle Sizes

Tables XV and XVI present the results of the sizing study for six electrically powered platform concepts. Figures 30 through 35 show possible implementations of the concepts. The motor horsepower requirements vary from 81 for the synchropter to 176 for the ducted fan.

3.3.5 Alternate Electric Systems

The electric concepts examined all utilize shaft-driven rotors with rotor torque balanced in equal counterrotating lifting rotors or by means of a tail rotor. An electrically powered torqueless system can be hypothesized with a motor-driven air compressor and rotor tip nozzles. This would be the electric equivalent of the cold cycle pumped fuel system shown in Tables XII and XIII. Differences in air vehicle gross weight, rotor diameter, and required horsepower would

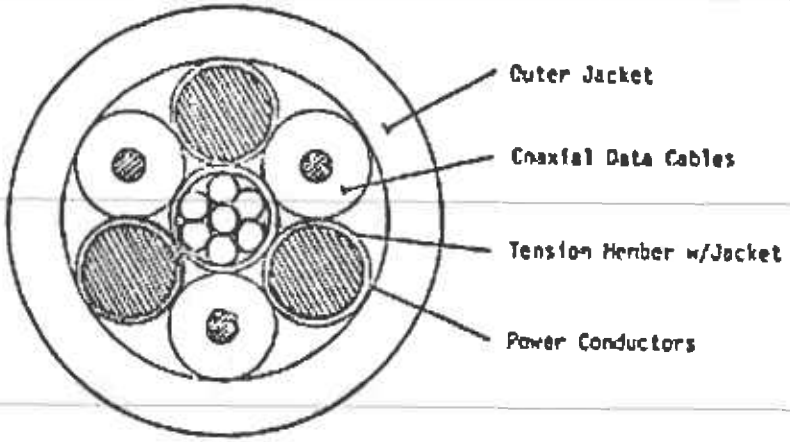

CABLE ELEMENT	QTY	MATERIAL	SIZE	WEIGHT
Tension Member w/Jacket	1	Steel/Nylon	.1562 in. Dia	.032 lb/ft
Power Conductors	3	Aluminum or Copper	.090-.173 in. Dia	.020-.050 lb/ft
Conductor Insulation	3	Silicone Rubber	.015 in. t	sp. gr. = 1.14
Coaxial Data Cable	3	(RG/U-161)	.082 in. Dia	.015 lb/ft
Outer Jacket	1	Nylon 12	.030 in. t	sp. gr. = 1.14

Figure 26. Typical Tether Cable for Electric Power.

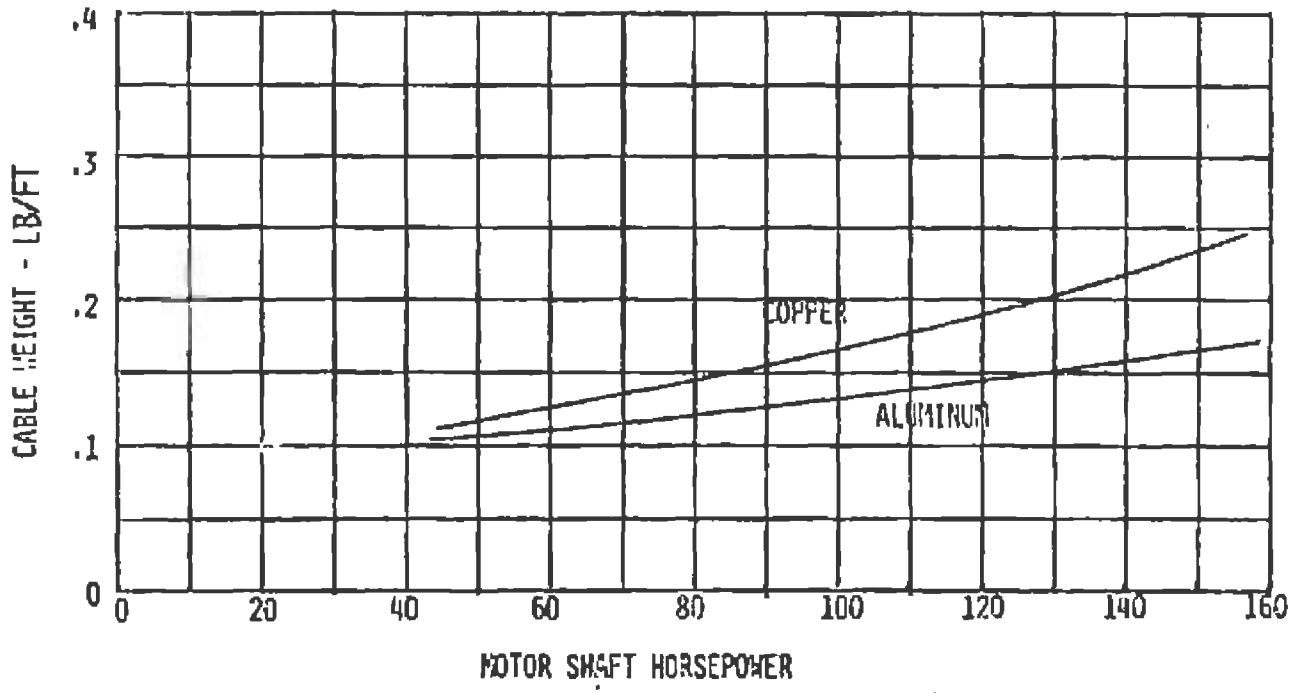

Figure 27. Weight of Tether Cable - Electric Power.

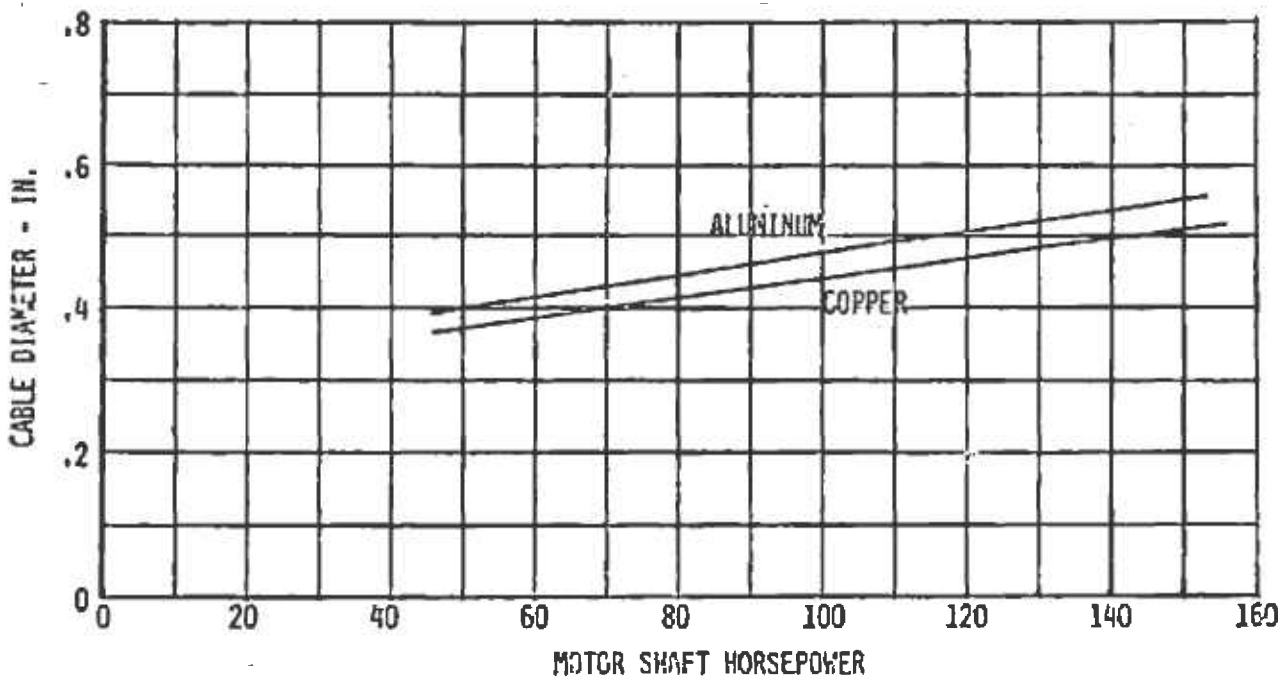

Figure 28. Diameter of Tether Cable - Electric Power.

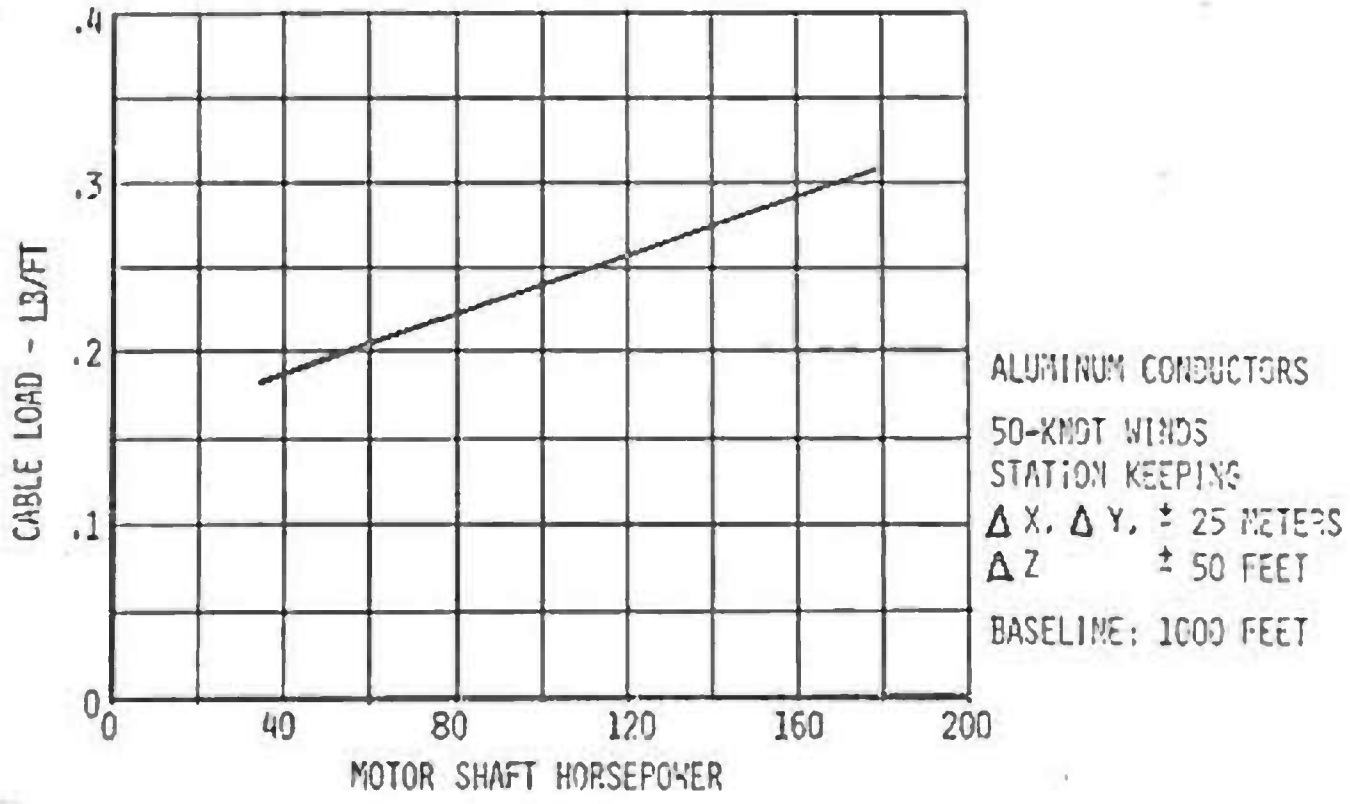

Figure 29. Tether Cable Load at Air Vehicle - Electric Power.

TABLE XV. AIR VEHICLE SIZES (ELECTRIC POWER SYSTEMS)

	CONVENTIONAL	COAXIAL	SYNCHROPTER	TANDEM	MULTIPLE FAN	DUCTED FAN
EMPTY WT (LB)	337	363	356	340	434	437
PAYLOAD (LB)	200	200	200	200	200	200
GROSS WEIGHT (LB)	537	563	556	540	634	637
CABLE LOADS (LB)						
0 WIND CLIMB	235	229	230	234	268	289
50 KNOT WIND	244	236	237	242	291	320
ROTOR DIA. (FT)	15.7	15.9	15.8	12.2	3.2	5.4
MOTOR RATING, (HP)	92	82	81	86	143	176

TABLE XVI. AERIAL PLATFORM DATA - ELECTRICAL POWER

	Conventional	Coaxial	Synchropter	Tandem	Multiple Fans	Ducted Fan
Empty Weight (lb)	336.7	363.5	363.5	340.1	434.1	437.4
Main Rotor	43.3	54.3	53.7	46.6	43.1	53.0
Tail Rotor	3.8	0.0	0.0	0.0	0.0	0.0
Drive System	46.0	59.9	60.2	52.3	0.0	0.0
Power Plant	86.2	79.2	80.0	84.1	219.5	185.3
Power Plant Inst.	2.8	2.5	2.5	2.7	4.3	5.3
Fuel System	0.0	0.0	0.0	0.0	0.0	0.0
Airframe	69.7	73.2	72.0	70.3	107.7	101.9
Landing Gear	10.7	11.3	11.1	10.8	6.3	15.9
Mech Flt Controls	8.0	16.9	10.5	13.5	0.0	7.6
Auto Flt Controls	41.1	41.4	41.3	34.9	28.1	43.2
Electrical	15.0	15.0	15.0	15.0	15.0	15.0
Aux. Equip.	10.0	10.0	10.0	10.0	10.0	10.0
Rotor Data						
Diameter (ft)	15.7	15.9	15.8	12.2	3.2	5.4
Solidity	0.052	0.061	0.061	0.052	0.097	0.156
RPM	731	722	725	943	4176	3694
No. of Rotors/Blades	1/2	2/4	2/4	2/4	8/16	2/4
Cable Data						
Diameter (in)	0.458	0.443	0.445	0.453	0.534	0.582
Weight (lb/ft)	0.129	0.123	0.124	0.127	0.160	0.180

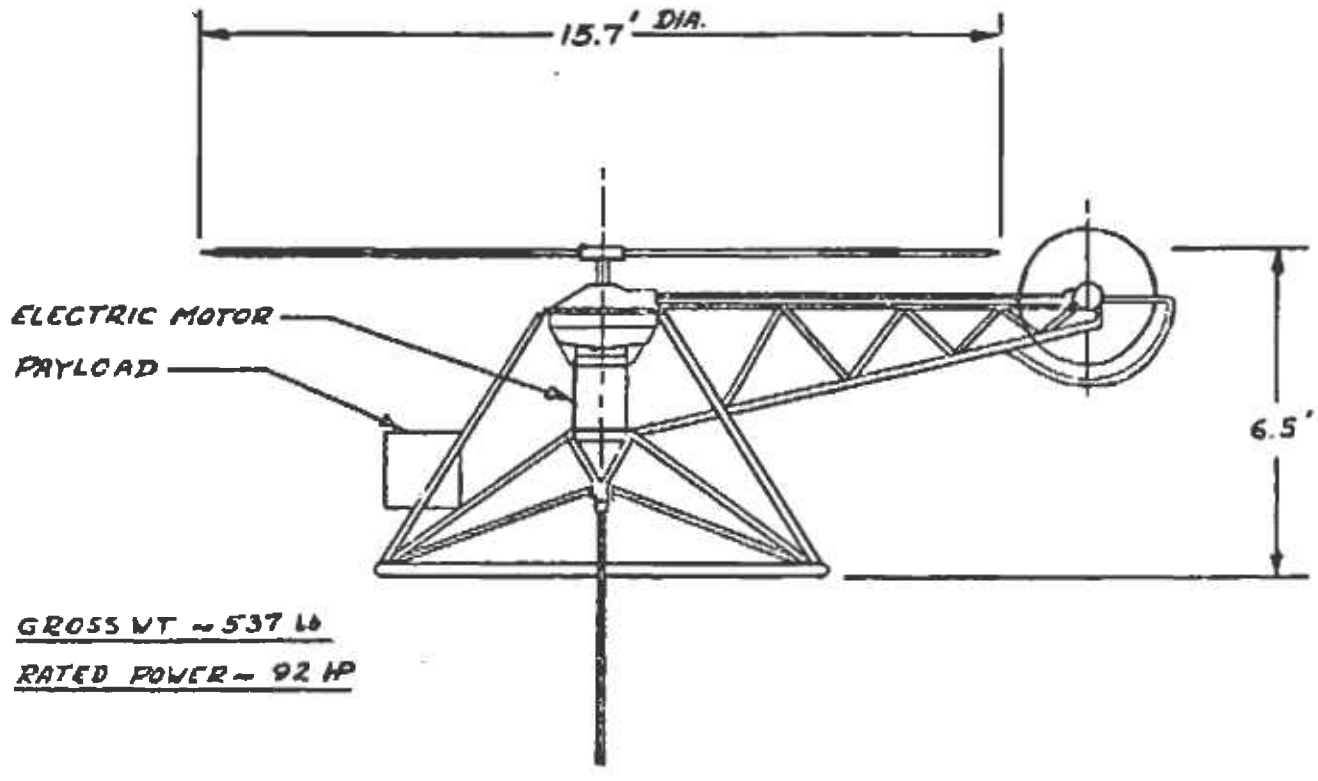

Figure 30. Electrically Powered Conventional Helicopter.

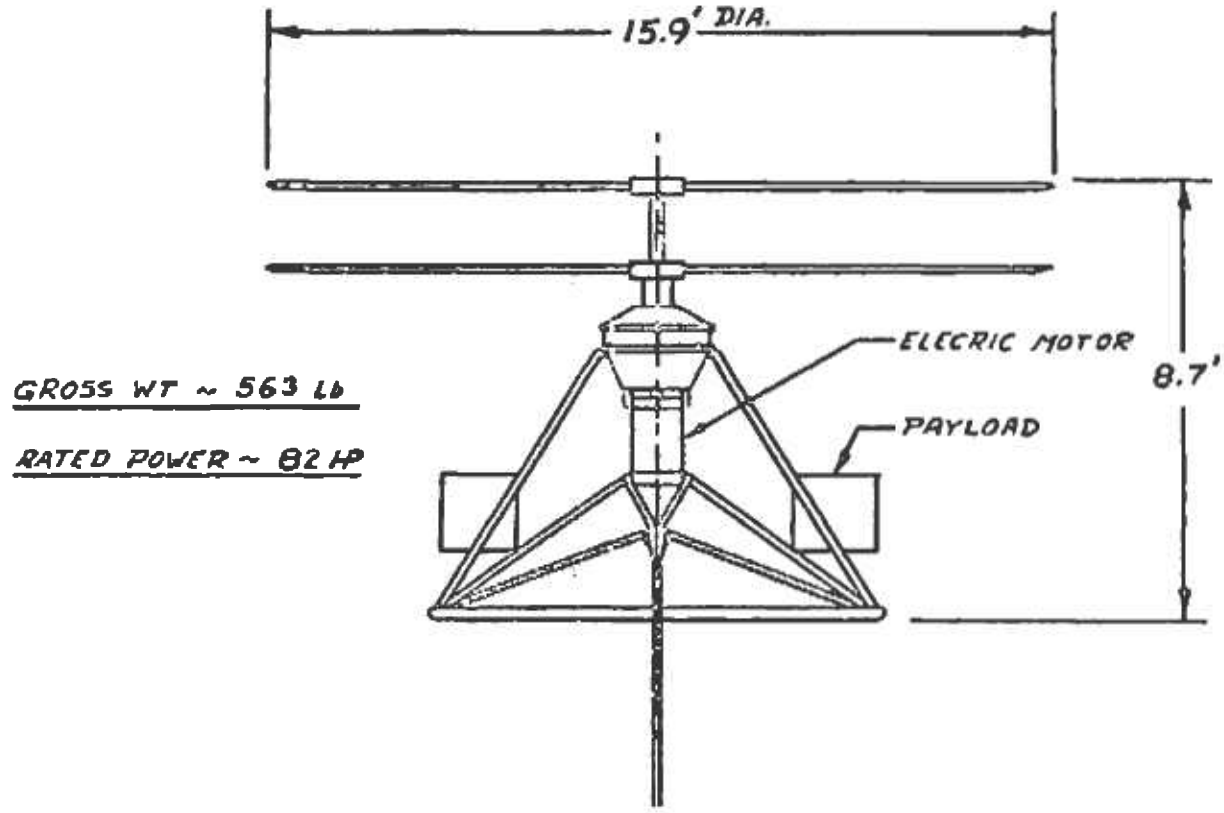

Figure 31. Electrically Powered Coaxial Concept.

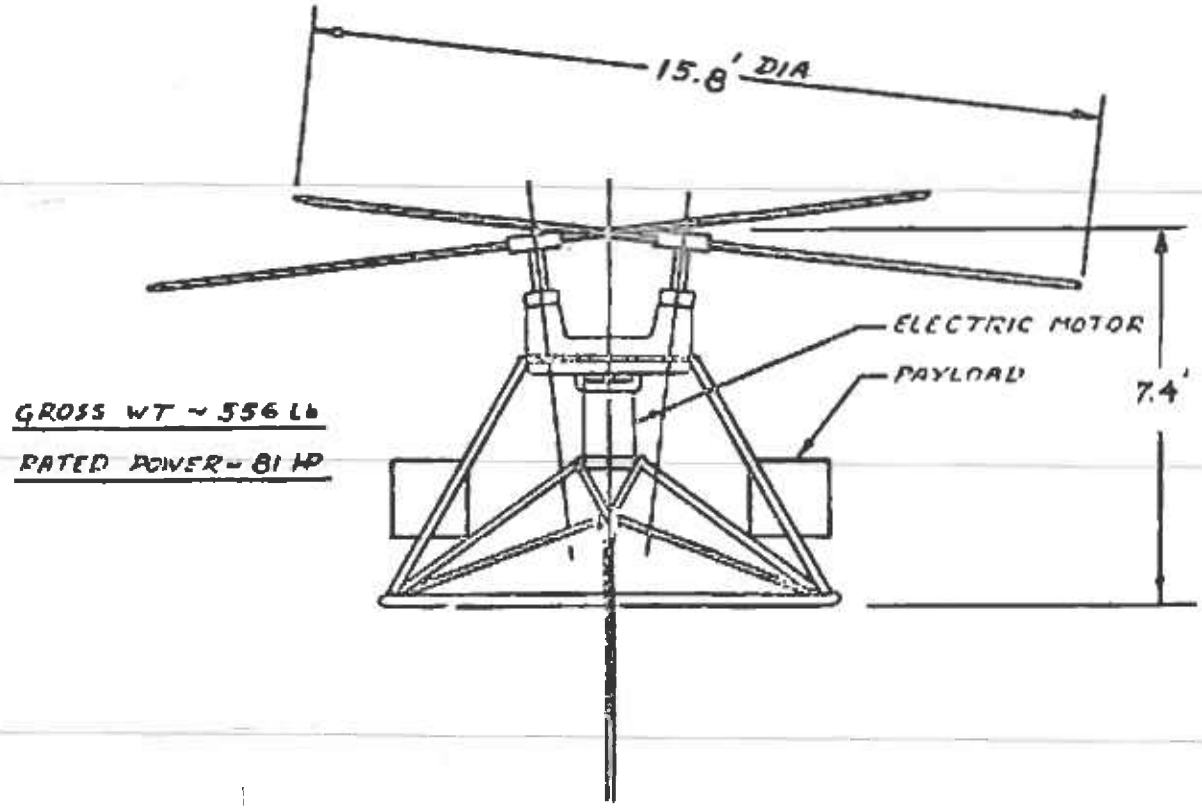

Figure 32. Electrically Powered Synchropter Concept.

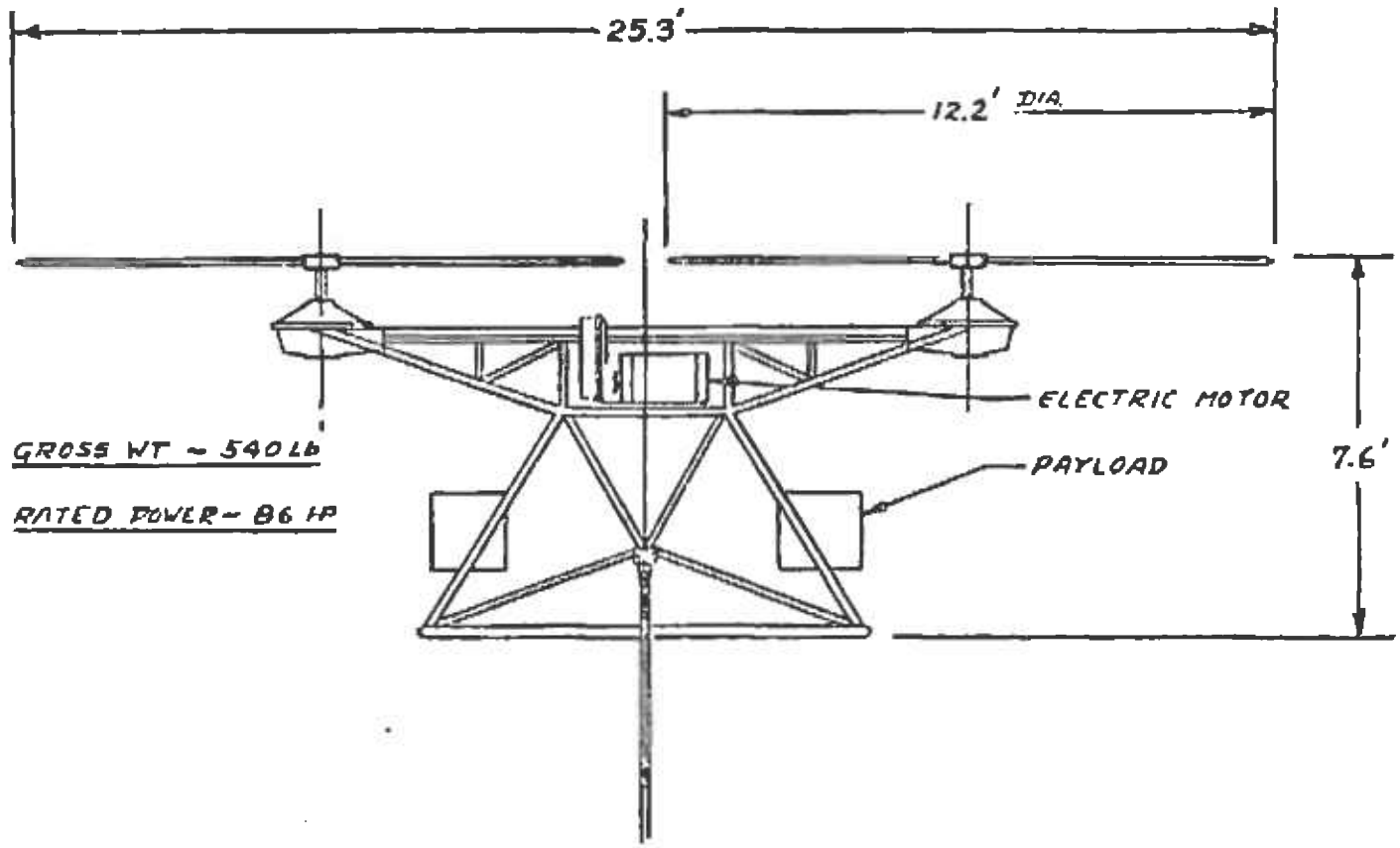

Figure 33. Electrically Powered Tandem Concept.

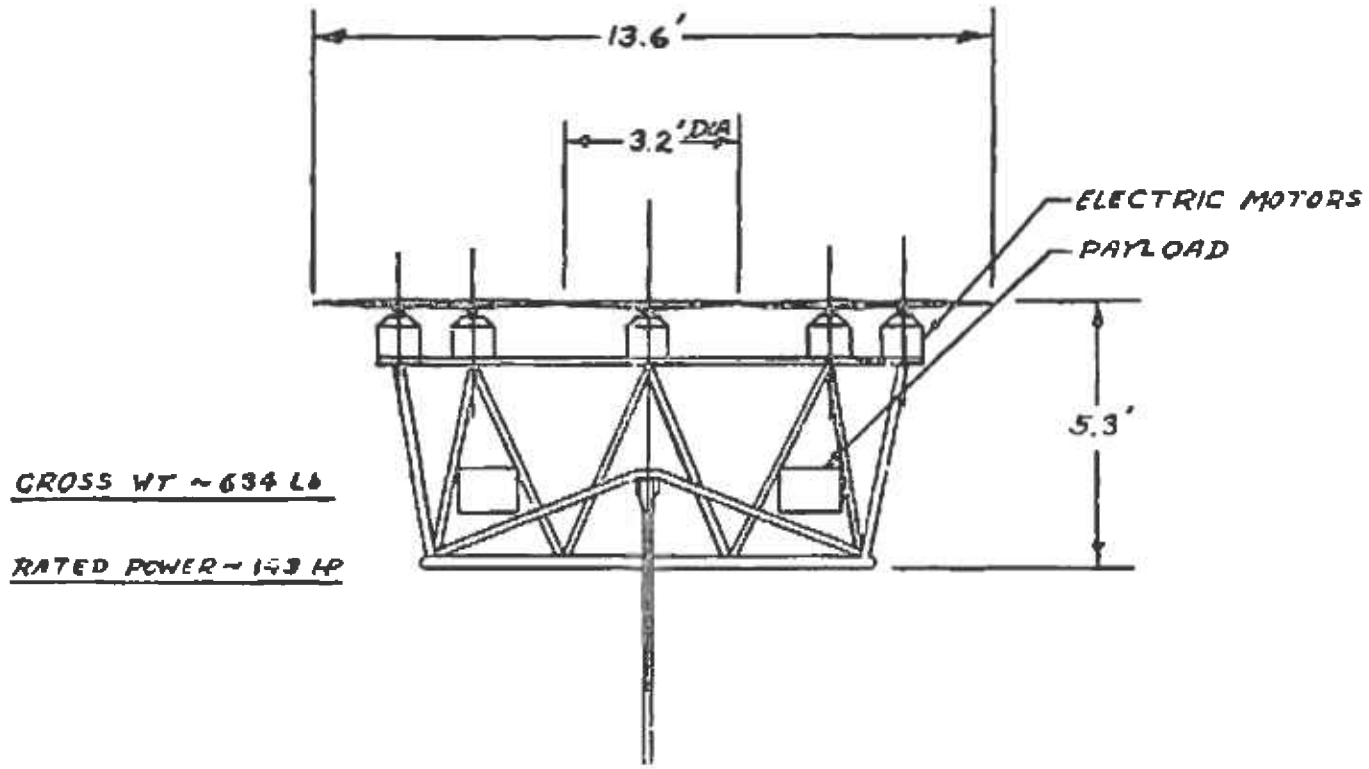

Figure 34. Electrically Powered Multiple Fan Concept.

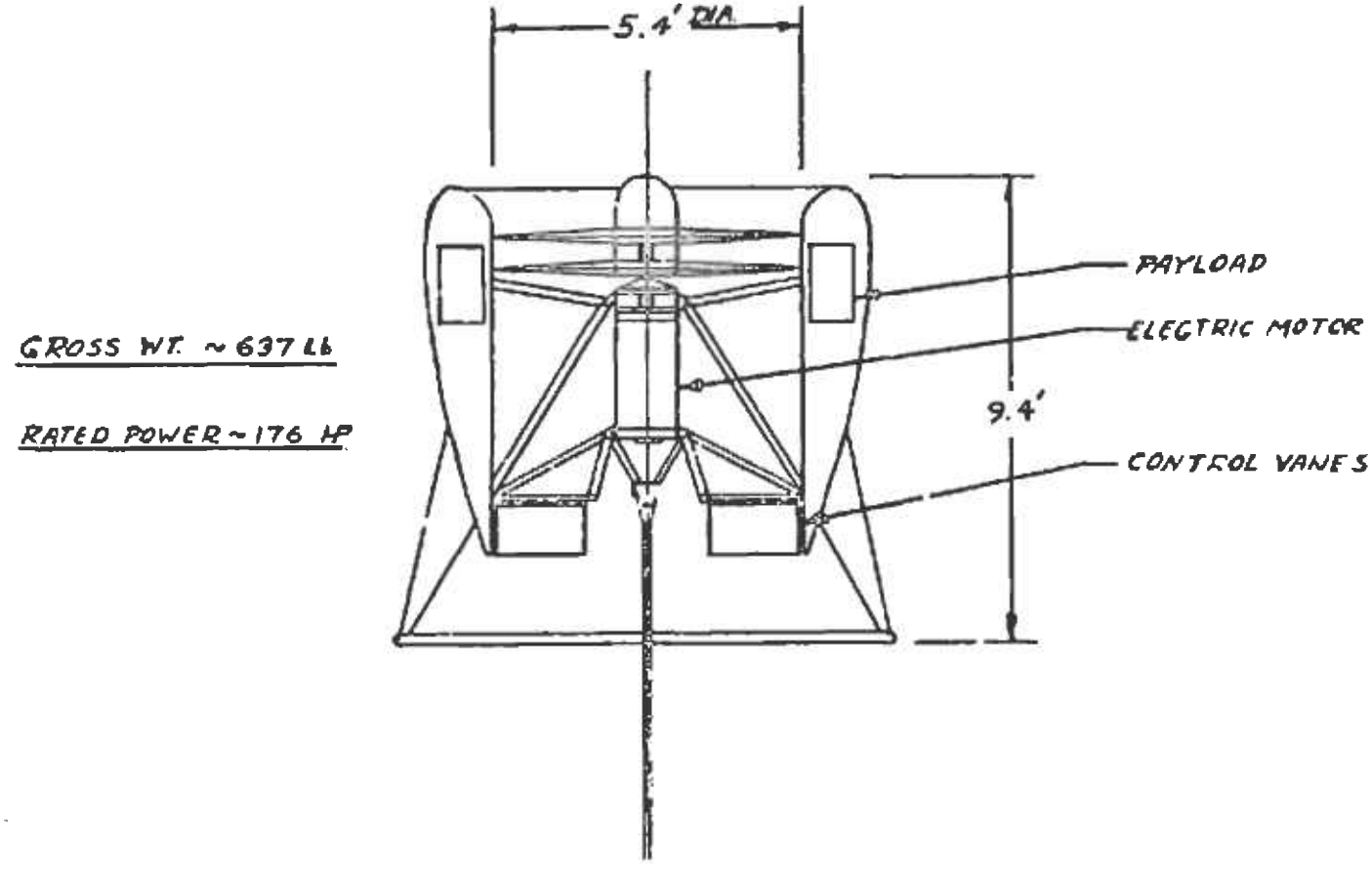

Figure 35. Electrically Powered Ducted Fan Concept.

come primarily from differences in power plant weight per unit horsepower. At 440 horsepower (the rated horsepower of the pumped fuel cold cycle system) electric motors are heavier than turboshaft engines. However, the electric platform would not carry fuel (46 lb), so the two concepts would yield about the same size aerial platform. The fuel consumption (on the ground) of the electric cold cycle system would depend on the choice of prime mover for the generator.

3.4 Integral Fuel Systems

In accordance with the statement of work, aerial platform sizes were determined for systems carrying mission fuel. Since the system specifications required 16 hours endurance, only shaft-driven low disc loading rotor concepts were contemplated. Data was calculated only for the conventional main/tail rotor configuration. The resultant data are tabulated in Table XVII for a range of mission endurance values.

The aerial vehicle weight and performance models described in Sections 3.1 and 3.2 for the turboshaft driven conventional concept were used here. Disc loading in hover was 4 lb/ft^2 and blade loading at 50 knots was 74 lb/ft. A tether cable with two coaxial data lines was estimated to weigh 73 pounds per 1000 feet and have a diameter of 0.38 inch. Cable tension at 50 knots was calculated to be 195 pounds.

For the models as described, and the conventional helicopter concept, the maximum endurance obtainable with integral fuel was found to be approximately 13 hours. Beyond this point the endurance decreased (due to higher gross weight and horsepower requirements) as fuel was added. Table XVII shows a 60-percent growth in gross weight and horsepower as the endurance is increased from 8 to 10 hours and an additional growth of over 100 percent going from 10 to 12 hours. Even with a disc loading of 2, a 330 horsepower machine is required for an endurance of 8 hours. Carrying mission fuel aboard the aerial platform is clearly not the best way to get long endurance.

For short duration missions, the integral fuel concept yields reasonable aerial platform sizes. Table XVII shows a rotor diameter of 17.4 feet and an engine rating of 152 horsepower for 1 hour endurance. (A fuel reserve of 15 minutes was also included.) The comparable values for the pumped fuel conventional platform were 16.1 feet and 131 horsepower.

TABLE XVII. AERIAL VEHICLE SIZES (INTEGRAL FUEL SYSTEMS)

	ON-STATION ENDURANCE					
	10 MIN.(1)	1 HR	3 HRS	8 HR D.L.=%	10 HR	12 HR
EMPTY WT (LB)	392	459	1302	1288	2091	4675
FUEL LOAD (LB)	36	114	1227	1062	2181	5139
PAY LOAD (LB)	200	200	200	200	200	200
GROSS WT (LB)	628	773	2729	2550	4472	10014
CABLE LOADS (LB)						
0-WIND	177	177	177	177	177	177
50-KNOT WINDS	195	195	195	195	195	195
ROTOR DIA. (FT)	16	17.4	30.4	41.7	38.5	56.9
ROTOR POWER (HP)	96	122	331	245	526	1146
FUEL FLOW (LB/HR)	86	91	148	129	218	428
ENGINE RATING (HP)	130	152	449	331	712	1549

(1) ALL FUEL LOADS INCLUDE 15 MINUTE RESERVE IN HOVER.

3.5 Compressed Air Systems

An attractive candidate for a reliable long endurance platform is one which utilizes high pressure air from the ground as rotor drive energy. In this concept, a compressor on the ground pumps high pressure air up the tether cable to the air vehicle. The air vehicle utilizes a single cold pressure jet rotor where air under pressure flows from the hub through the rotor blades to tip nozzles. The attraction of this system is its simplicity. The air vehicle does not require a power plant or a gearbox. As a result, the vehicle is very light per unit of rotor lift.

The main disadvantages of this concept stem from the poor efficiency of the drive concept. As already seen in the sizing of pumped fuel systems, the cold cycle concept required three times the horsepower of a gear driven rotor. If the air is pumped from the ground, large tubes are required, cable loads at high wind speeds are high, and the rotor lift required grows rapidly, negating the apparent weight and size advantages of the concept.

Selecting the flow conditions for pumping high-pressure air to the vehicle involves some trade-offs. In order to minimize cable loads, the smallest possible tube/cable diameters should be used. However, the difficulty of pumping air over long distances in small tubes arises, and choking limits the cable diameter. Temperatures also rise rapidly as pressure goes up and friction losses increase, thereby introducing a need for cooling the air before it enters the cable.

Aerial platform and ground component data was calculated for two airflow conditions, hot high-pressure air and cold medium-pressure air. The results are shown in Table XVIII with data on the cold cycle concept employing an airborne turboshaft engine driving a compressor. The airflow conditions are listed in Table XIX. The cold air is obtained by passing the air through a cooler on the ground before going to the cable.

The data clearly shows the advantages and disadvantages of the pumped air concept. The empty weight of the cold air system is less than half that of the pumped fuel system but its fuel flow is about nine times higher. The cable load at 50 knots is 1322 pounds for the pumped air system compared to only 254 pounds for pumped fuel, but it is the energy lost in the long tube rather than the external loads that drives the system horsepower and fuel consumption of the pumped air concept to such high values.

When the cold pumped air system is compared with a pumped fuel system employing an advanced technology turboshaft engine, the poor overall efficiency is readily apparent. The fuel flow for pumped air is 12 times that of the pumped fuel system. For 16 hours of operation, 4300 gallons of JP-4 fuel would be required by the ground based turbine/compressor and air cooler.

TABLE XVIII. COMPARISON OF PUMPED FUEL & COMPRESSED AIR SYSTEMS EMPLOYING COLD CYCLE TIP NOZZLES

	PUMPED FUEL		PUMPED AIR	
	CURRENT TECHNOLOGY ENGINE	ADVANCE TECHNOLOGY ENGINE	COLD	HOT
EMPTY WEIGHT (LB)	721	589	324	213
FUEL LOAD (LB)	46	33	0	0
PAYLOAD (LB)	200	200	200	200
GROSS WEIGHT (LB)	967	822	524	413
CABLE LOADS (LB)				
0-WIND	206	203	776	362
50 KNOT WIND	254	245	1322	510
ROTOR DIAMETER (FT)	19.3	18.1	20.3	15.7
ROTOR HP	130	114	232	104
FUEL CONSUMPTION (LB/HR)	184	137	1620(1)	550(1)
ENGINE RATING (HP)	440	386	2500(1)	850(1)

(1) These values apply to components located on the ground.

TABLE XIX. AIRFLOW CONDITIONS

	HOT AIR FROM GROUND	COLD AIR FROM GROUND	AIR FROM AIRBORNE COMP.
COMPRESSOR OUTPUT AIR			
PRESSURE:	1100 PSIA	483 PSIA	44 PSIA
TEMPERATURE:	1100°F	60°F	300°F
AIR VEHICLE INPUT AIR			
PRESSURE:	115 PSIA	218 PSIA	44 PSIA
TEMPERATURE:	1300°F	60°F	300°F
FLOW RATE	1.1 LB/SEC	5.7 LB/SEC	4 LB/SEC
AIR LINE DIAMETER	1.0 IN.	2.0 IN.	-

The hot air system looks much better, but the temperature of the small air hose varies from 1100°F to 1300°F. It is doubtful that a practical long life cable could be made to handle this airflow.

From the data generated, it was concluded that pumped high-pressure air was not the best form of energy for the tethered platform and no further analyses were conducted.

3.6 Autogyros

The autogyro was the first rotary-wing vehicle to be utilized as a tethered elevated platform. Unpowered autogyros, towed by surfaced submarines, provided elevated observation posts for the German Navy. At the present time, Kaman is under contract to the U.S. Navy to demonstrate the feasibility of unmanned, automatically controlled autogyros as elevated sensor platforms tethered to ships.

Flight tests of experimental models of STAPL (Ship Tethered Aerial Platform) are scheduled for mid 1974.

The motivation for STAPL stems from the simplicity and low cost of the autogyro compared to driven rotor systems. The ships motion and prevailing winds at sea also offer the potential for unpowered operation at a saving of 200 to 300 gallons of fuel per day. Kaman's current contract to demonstrate the aerodynamic and functional feasibility of an automatically controlled autogyro is a necessary first step in developing this concept for the U. S. Navy.

Figure 36 depicts an operational configuration for the STAPL autogyro. An electric motor drives a pusher propeller to maintain airspeed above 20 knots.

Operation with a fixed ground tether point for Army missions would require a propulsion system in the air vehicle. The resultant flight characteristics make it impossible for the autogyro to meet the requirements for station keeping and the requirements for a fixed compass orientation of the airframe. Without wind, the autogyro would be propelled in a circular orbit of 600 to 800 feet diameter and body fixed sensors would rotate continuously. In winds of 50 knots, an autogyro with STAPL performance would probably assume a position 500 to 700 feet downwind from the ground tether point (with 1000 feet of cable), and the airframe would point into the wind.

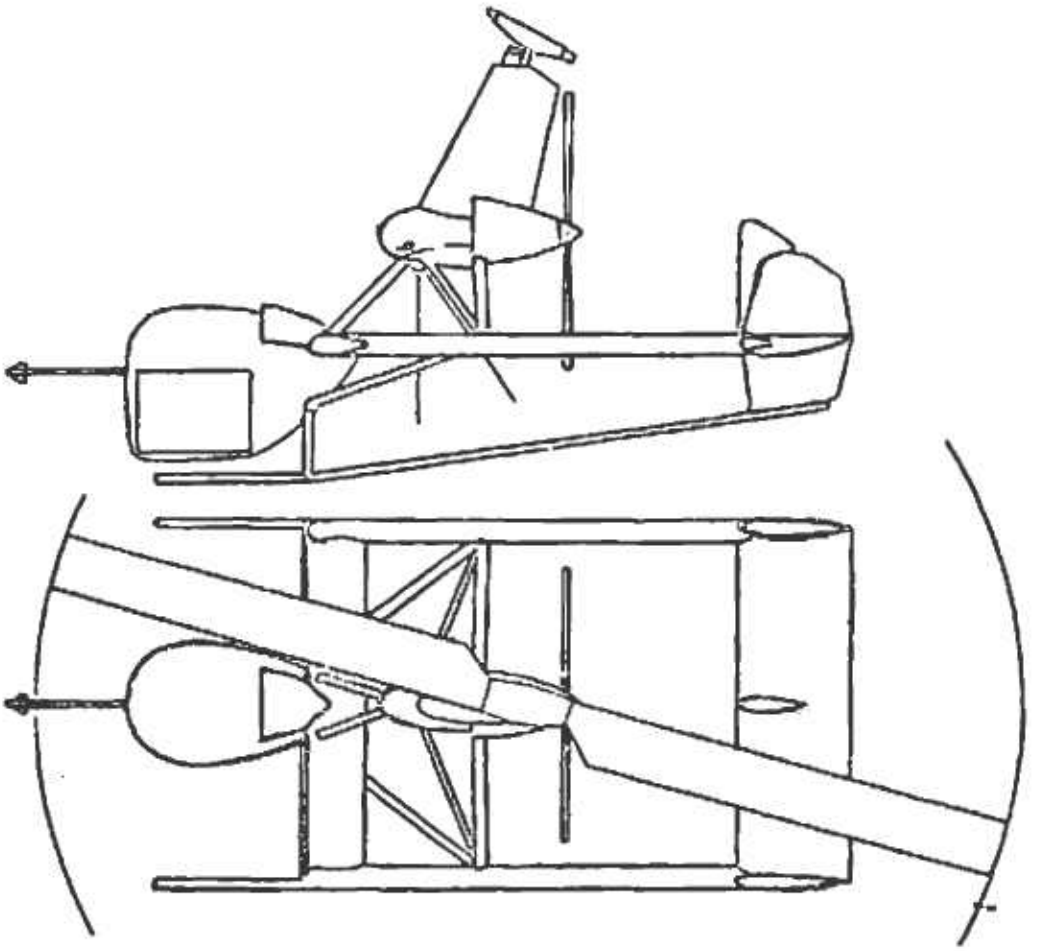

ROTOR DIA: 22 FT
EMPTY WT: 385 LB
PAYLOAD WT: 75-150 LB
MOTOR HP: 90

Figure 36. STAPL Autogyro.

Although the autogyro cannot meet the baseline design requirements, its on-station flight characteristics may be acceptable for some missions. However, launching and retrieving the autogyro from a stationary platform in the field requires addition of a rotor drive system which would negate a large part of the inherent simplicity of the autogyro concept. Perhaps the least involved system would be tip ram jets. About 200 pounds of fuel would be required to cover launch and retrieve time. Small solid rocket motors could be used to get the rotor up to ram jet operating speed.

Although conceptually simple as a tethered platform, the autogyro is not recommended for Army field missions.

SECTION 4

AERIAL PLATFORM DETECTABILITY

A limited analysis was made of aerial platform signatures and an attempt was made to estimate detection ranges in the field. Simple models were utilized in the analysis since the primary purpose was to obtain data that could be used in the selection of the best aerial platform. More comprehensive models and analyses would be required to judge survivability of any of the tethered platforms in hostile situations.

4.1 Aural Detection

Octave band sound pressure levels and aural detection ranges have been calculated for a number of air vehicle configurations. For each concept, octave band sound pressure levels were calculated for those sources considered to be significant. For the ducted and multiple fan configurations only the fans were considered on the assumption that the electric motors and/or gearbox noise contributions would be insignificant. Noise levels of the conventional helicopter, tandem, and coaxial/synchropter configurations were calculated based on rotor contributions only. For configurations employing tip jets, noise contributions from the jets as well as the basic rotors were included. Component and total vehicle octave band sound pressure levels calculated for each concept are given in Table XX.

Aural detection range for the unaided human ear was calculated using the total vehicle octave band spectra. A prediction method was used which takes into account source noise generation characteristics, sound propagation characteristics (including spherical spreading, atmospheric absorption, and excess absorption due to propagation over ground cover) human hearing thresholds, and ambient noise levels. The results of this analysis are shown in Table XXI. In all cases, only hovering flight at 1000-ft altitude over a densely forested area is considered. The human detector was assumed to be in a quiet forest.

The vehicle shown to have the lowest aural detection range, 2.44 km, is the cold jet driven rotor. Superiority of this concept results from a number of factors, among which are:

- The utilization of a large, slow turning rotor, which causes the fundamental rotor noise component to be below the audible frequency range.
- The absence of antitorque tail rotor.
- The use of low temperature, bleed air, tip jets, which do not significantly contribute to the vehicle noise signature.

TABLE XX. SUMMARY OF COMPONENT AND TOTAL VEHICLE SOUND PRESSURE LEVELS

Concept Description	Component	Octave Band SPL's - dB (re.-.[illegible] ubar)								
		[illegible]	63	[illegible]	[illegible]	[illegible]	[illegible]	[illegible]	[illegible]	[illegible]
Ducted Fan - Electric Drive	Total (2 fans)	-	-	109	105	101	89	81	85	81
Coax/Synchropter Electric Drive	Total (2 rotors)	91	88	78	68	66	71	72	76	72
Std M.R./T.R. - Electric Drive	Main Rotor	88	85	75	65	65	66	70	66	65
	Tail Rotor	-	-	94	90	87	70	80	76	73
	Total	88	85	94	90	87	78	80	76	75
Multiple Fans - Electric Drive	Total (8 fans)	-	-	107	103	98	89	88	82	78
Tandem Rotors Electric Drive	Total (2 rotors)	92	88	84	73	71	72	76	73	71
Std M.R./T.R. - Pumped Fuel	Main Rotor	88	85	75	64	65	66	70	66	65
	Tail Rotor	-	-	94	90	87	70	80	76	75
	Total	88	85	94	90	87	78	80	76	75
Single Rotor - Bleed Air Tip Jet - Pumped Fuel	Rotor	83	75	70	64	64	65	64	63	58
	Jets (2)	38	36	45	49	47	43	39	39	38
	Total	83	75	70	64	66	64	68	63	58
Single Rotor - Ram Tip Jet - Pumped Fuel	Rotor	93	90	80	70	66	67	71	67	66
	Jets (2)	58	58	67	67	71	69	65	61	57
	Total	93	90	80	72	72	71	72	68	66
Single Rotor Bleed Air/Tip Burn Jet - Pumped Fuel	Rotor	88	85	75	64	65	66	70	66	65
	Jets (3)	58.5	50.5	66.5	75.5	79.5	77.5	73.5	69.5	65.5
	Total	88	85	75	75.5	79.5	77.5	75	71	68
Std M.R./T.R. - Turbine Drive - Integral Fuel	Main Rotor	83	72	61	59	60	64	60	59	54
	Tail Rotor	-	93	88	84	73	71	75	71	70
	Total	83	92	88	84	73	72	75	71	70

TABLE XXI. AURAL DETECTION RANGES[1] OF TETHERED PLATFORMS

	Concept	Aural Detection Range KM
1	Ducted Fans - Electric Drive	6.54
2	Coax/Synchropter Electric Drive	3.61
3	Std Helicopter - Main Rotor/Tail Rotor Electric Drive	4.79
4	Multiple Fans (8 Fans) - Electric Drive	6.24
5	Tandem Rotors - Electric Drive	3.69
6	Std Helicopter - Main Rotor/Tail Rotor Pumped Fuel	4.79
7	Single Rotor - Bleed Air Tip Jets - Pumped Fuel	2.44
8	Single Rotor - Ram Tip Jets- Pumped Fuel	3.90
9	Single Rotor - Bleed Air - Tip Burning Jets - Pumped Fuel	3.22
10	Std Helicopter - Main Rotor/Tail Rotor Integral Fuel	4.22

(1)Air vehicle hovering 1000 ft above quiet forest.

The remaining vehicle concepts have aural detection ranges of 3.22 km to 6.54 km. The ducted fan and multiple fan configurations exhibit the greatest aural detectability, primarily due to their high rpm and blade loading. The next highest aural detection range is associated with those configurations utilizing antitorque tail rotors. This is due to tail rotor noise dominating the vehicle noise spectrum. The detection range of the tip ram jet is high because of the high rotor tip speed.

4.2 Infrared Detection

Infrared signatures were estimated for four basic designs:

(1) electric power/motor driven rotor
(2) pumped fuel/turboshaft driven rotor
(3) pumped fuel/cold cycle tip nozzles
(4) pumped fuel/tip ram jets

All concepts considered can be assessed from the data generated.

The basic approach involved (1) estimation of warm and hot body temperatures and radiation areas, (2) calculation of radiant energy from the source, and (3) estimation of the atmospheric attenuation between the source and a detector on the ground. The analysis of detection range was restricted to worst-case conditions, and no attempt was made to reduce the IR signatures. An uncooled detector, similar to what would be found in current infantry weapons (shoulder fired), was assumed in the estimation of detection ranges.

For the electric motor driven system, the IR sources were the motor cooling air and the tether cable. For both turboshaft engine concepts, gearbox and cold nozzle rotor drives, the IR source is the turbine power stage, and it was assumed that an unobstructed end view was available to the enemy. Plume detection was not considered. For the tip ram jet, the detection range was based on steady radiation from a side view of the tip ram jet. The plume radiation was not considered.

The temperatures and areas used in the calculations are listed in Table XXII and the resultant detection ranges are listed below:

(1)	Electric Motor Drive	-	<< 1 km
(2)	Turboshaft Engine Drive	-	2.3 km
(3)	Cold Cycle Tip Nozzles	-	5.0 km
(4)	Tip Ram Jets	-	2.0 km

The electric system is not detectable by simple IR means except at very close range, perhaps 500 feet. The cold cycle system can be detected at much longer range than the shaft-driven concept because of its large engine (440 hp rated vs 131 hp). However, both engines can be shielded

TABLE XXII. INFRARED RADIATION SOURCES

Source	Source Temperature °F	Source Area, Sq. In.
Electric Drive System		
Cooling Air	157	6.5
Tether Cable	150	500 (1)
Turboshaft Drive System		
Power Turbine	1100	23.8
Cold Cycle System		
Power Turbine	1160	100
Tip Ram Jet System		
Burner Section	1000	17.5
Forward Tail Cone	900	16
Aft Tail Cone	700	20

Notes: (1) Cable diameter of 0.4 inch viewed from 1 km with sensor having a F.O.V. of 2°.

and the plume cooled with a nominal power penalty. For tethered stand-off surveillance, the engine exhaust should always be directed away from the enemy.

The tip ram jet presents a varying signature, and neglecting the plume may lead to some inaccuracy in the detection range. In this case, little can be done to shield the hot sections or cool the plume without serious power penalties.

The IR analysis was performed by the Vertol Division of the Boeing Company under subcontract to Kaman Aerospace Corporation.

4.3 Radar Detection

The tether cable as well as the aerial vehicle must be considered in any analysis of radar detection. Returns from the cable will depend primarily on the aspect angles and the cable diameter and conductivity. If the wind is blowing from the tethered platform toward the enery, the convex cable will reflect only a small portion of the radiated energy back to the antenna. If the wind is blowing in the other direction, the concave cable will present a much larger radar target.

The diameter of the pumped fuel and electric power cables are, except for the ram jet and pulse jet systems, substantially equal. Consideration of lightning dangers (discussed in Section 7) requires a conductive sheath on the exterior of both types of cables to protect the internal conducting elements. Therefore, the cables in the pumped fuel and the electric power systems will present similar radar targets. Careful deployment will be the key to minimizing the cable returns. The on-station altitude of the sensor platform should depend on the terrain and the nominal distances to the ground areas of interest. There should be no need to expose a long length of cable to an enemy ground radar.

Radar cross sections of the aerial vehicles were not estimated. The sketches shown in Figures 22 to 24 and 30 through 35 indicate widely varying shapes and sizes. The coaxial, synchropter, and tip driven systems do have similar shapes and dimensions, and the bodies of the vehicles will present similar radar targets. A conducting skin should be used to reflect most of the incident energy away from the viewing radar.

The largest return will probably come from the rotor hubs, rotor blades, and rotor controls. Some shielding with radar absorption material may be possible but the net cross section will depend on the differences in configuration. The coaxial and synchropter concepts expose more shafts and controls than the reaction driven cold and hot cycle machines, but the latter have large metal ducts that would involve substantial weight penalties if shielded. The hot cycle, and perhaps the cold cycle concept as well, requires a metallic structural member in the rotor blade whereas the shaft-driven concepts can utilize nonmetallic

rotor blades, thus reducing radar cross section of the rotor. Deployment and operational concepts will have a major impact on radar detectability. If high altitudes are used at close ranges to enemy ground radars, the aerial vehicle will be detected. But if the on-station altitude is chosen near the lower edge of the enemy's radar beam, the stationary tethered platform will not be detected except at very close ranges. A simple radar warning device could be carried in the aerial vehicle and the altitude of the tethered platform reduced if lock-on by an enemy radar was detected.

There are some missions under consideration where the platform will utilize radiating devices. For these missions, the radar cross section of the aerial platform is of secondary importance.

4.4 Visual Detection

Visual detection will depend on the size of the aerial platform and its contrast with the sky background. Unaided detection by the human eye will be extremely difficult. Using a typical dimension of 2 meters for the body of the aerial platform and assuming a very high contrast of 50 percent (1.5:1), an unaided observer 4 km away has less than a 50-percent probability of detecting the platform if he is looking at it. Careful attention to vehicle finishes and colors should reduce the probability of detection by the unaided eye to acceptable values at ranges under 2 km.

SECTION 5

STABILIZATION AND CONTROL

The first look at stabilization and control of tethered rotary-wing vehicles sometimes leads to the conclusion that a high degree of inherent stability exists and that augmentation is unnecessary. No self-stabilizing system has been demonstrated* and the tethered platform designed to meet the baseline specifications will require an automatic control system.

Many control and stabilization concepts exist, but all are not applicable, much less feasible, to every lifting system concept. The mechanisms for stabilization and control of the aerial platform must therefore be considered as part of the selection of the lift system as well as for their ability to meet the system performance specifications. The study of stabilization and control within this contract effort was restricted mainly to a study of this interaction. Guidance in the selection of the best overall system was sought; the detailed analysis and design of the control system is left for a future effort.

The study included consideration of:

(1) attitude stabilization and control
(2) directional flight performance
(3) station keeping
(4) trim attitude variations
(5) automatic flight control systems

5.1 Attitude Stabilization and Control

The baseline system specification requires that the attitude response to a 10-knot gust be limited to ± 2 degrees with maximum angular rates of ± 7 degrees/second. The platform disturbing moments will come mainly from the reaction of the lift system to a change in airspeed and will depend upon the manner in which the rotor or fan reactions are transmitted to the body of the platform.

Several design parameters affect the gust response of rotary-wing vehicles and minimizing the response requires careful consideration of the impact on other aspects of performance. Increasing the disc loading reduces the gust response of the rotor but leads to higher horsepower requirements. The airframe response to rotor disturbance depends on the so-called rigidity of the rotor. A teetering rotor cannot exert pitching or rolling moments at the rotor hub, and airframe attitude motions will build up slowly as the rotor lift vector tilts from its equilibrium

---

Note* Petrides (Ref. 1) does report on some limited success of an effort in Germany to fly a machine with multiple tethers.

position. For very stiff rotor systems, the change in lift on a rotor blade, due to gusts or changes in airspeed, will immediately exert a hub moment and cause rapid changes in airframe attitude. Flapping rotors with hinges offset from the center line of the rotor shaft have response characteristics somewhere between the teetering rotors and the rigid rotors. Kaman's UH-2 helicopter has an offset of 3 percent (of rotor radius) which is typical of articulated rotor design. Lockheed's Cheyenne and Sikorsky's ABC system have effective offsets of 20 to 47 percent while Bolkow's Bo 105 has an effective offset of 12 to 15 percent.

The rotor's response to gusts can be reduced by adding a gyro bar (Bell UH-1, etc.) or pitch/flap coupling (δ3) to the basic rotor. The gyro bar provides a reference plane for rotor rotation and the δ3 mechanism reduces rotor blade pitch angle as the blade flaps. Both mechanisms work through the rotor's cyclic pitch controls to reduce the rotor's response to gusts.

All lift system concepts studied except the multiple fan and ducted fan, can utilize similar disc loadings, offset hinges*, gyro bars, and δ3, so that the basic gust response of the rotor systems can be considered to be somewhat independent of rotor configuration. Under these assumptions, the response of the airframe to gusts will depend on the physical disposition of the rotors on the air vehicle, the vehicles inertia, and the compensating action of the Automatic Flight Control System (AFCS). But the physical properties of the air vehicle will be fixed by the lift and power requirements. Therefore, the gust response will be determined primarily by the action of the AFCS.

The critical item in AFCS action is the power of the controlling device. If the controls are weak, even small disturbing moments will cause large changes in airframe attitude and position.

Several concepts exist for attitude control of tethered rotary-wing platforms. Those considered in the study were:

1. Cyclic Pitch Control of Rotor
2. Direct Tilt of Rotor
3. Deflection of High Velocity air Stream
4. Translation of Tether Cable Attachment
5. Use of Multiple Tethers and Long Booms
6. Lift Control in Multiple Rotor Systems

---

* Two-bladed rotors with offset flapping hinges may give unacceptable vibrations.

Cyclic pitch control can be obtained by pitch horn, Kaman servo flap, jet flaps, or circulation control and can be used in all platform concepts except the ducted fan and multiple fan. The performance of rotary-wing vehicles with cyclic pitch control is well known, and there can be no question about the feasibility of a tethered platform utilizing this stabilization and control concept. The effectiveness of cyclic pitch control is illustrated in Table XXIII for four basic platform configurations. The effectiveness is presented in the form of maximum angular pitch and roll acceleration available from full cyclic control input. The moments of inertia used were calculated from preliminary sketches and physical data generated in the sizing study, and the control moments were calculated using dimensional ratios typical of manned helicopters.

Data is presented in Table XXIII for "hinged" and "hingeless" rotors. The pitch and roll control effectiveness does not vary appreciable* with helicopter configuration but there is about a ten-to-one change with rotor "rigidity". All concepts** show satisfactory pitch and roll control effectiveness utilizing cyclic pitch control. The hinged rotor concepts have lower control power but they are less disturbed by gusts than their stiff rotor counterparts. As stated earlier, detailed analysis of stability and control and detailed design of the rotor is outside the scope of this study.

The estimated effectiveness of the controls for the ducted fan and multiple fan concepts is also shown in Table XXIII. The multiple fan platform is controlled by varying the rpm of selected fans in the array. Eight fans were assumed and the maximum control moment was based on a tip speed change of 100 ft/sec. No attempt was made to account for flow interaction, so the values listed may be optimistic.

The ducted fan is controlled by deflecting the high velocity air stream coming from the lift fans. The control effectiveness values assume maximum vane deflection of 30 degrees in full span exit vanes.

The estimated effectiveness of pitch and roll control in the fan concepts would seem to indicate that reasonable attitude control should be possible with these concepts. However, both must be considered questionable from this point of view. The multiple fan concept, which is based on

---

* The exception is pitch control in the tandem, which is obtained by differential lift control on the rotors.

** The tandem again presents an exception. Yaw control, which is normally obtained by differential tilt of the lift vectors, is rendered ineffective by a stiff rotor.

TABLE XXIII. CONTROL POWER SUMMARY

CONFIGURATION	MAX. CONTROL MOMENT-FT-LB			MOMENT OF INERTIA-SLUG-FT^2			MAX. ACCELERATION-RAD/SEC^2		
	ROLL	PITCH	YAW	ROLL	PITCH	YAW	ROLL	PITCH	YAW
HELICOPTER (HINGED ROTOR)(1)									
CONVENTIONAL	376	293	171	35	104	84	10.7	2.8	2.0
SYNCHROPTER	282	293	241	26	64	47	10.8	4.6	5.1
COAXIAL	376	293	241	26	64	47	14.5	4.6	5.1
TANDEM	272	2777	503	30	162	162	9.1	17.1	3.1
HELICOPTER (HINGELESS ROTOR)(2)									
CONVENTIONAL	3384	2637	171	35	104	84	96.7	25.4	2.0
SYNCHROPTER	3384	2637	241	26	64	47	130.2	41.2	5.1
COAXIAL	3384	2637	241	26	64	47	130.2	41.2	5.1
TANDEM	2448	2777	56	30	162	162	81.6	17.1	0.3
MULTIPLE FAN	1360	2720	212	43	211	241	31.2	12.8	0.9
DUCTED FAN	303	303	216	59	59	106	5.1	5.1	2.0

Notes: (1) Zero offset of flapping hinge.
(2) Equivalent to 8 percent offset of flapping hinge.

Robenhorst's paper, has not been tested and existing data, or theories, on rotor airflows, flow interactions, gust response, etc., cannot be applied to these high disc loading unducted fans with axial separations of only one or two fan diameters. Untethered vehicles with ducted fan lift systems have been built and flown and their stability and control characteristics are known, fairly well. Their behavior in forward flight and gusty air has not been entirely satisfactory and is due to the high rolling and pitching moments relative to the control power available with vane controls. Translational velocities across the duct generate substantial duct moments and partial duct stall at high airspeeds, and angles of attack can lead to loss of control. The main advantages of the ducted fan vehicles are their compactness and their safety, i.e., the use of shrouded propellers. These advantages must be weighed against their stability and control characteristics and their lifting efficiency relative to other candidates for the tethered platform job.

Other control concepts were listed above for pitch and roll stabilization. Direct tilt of rotors cannot be used in all of the platform concepts and this approach is best evaluated for possible use after the lift system is selected. If three cables are tied to three booms on a rotary-wing lifting vehicle and the ground tether points are separated sufficiently, it may be possible to stabilize the attitude as well as the position of the aerial vehicle without auxiliary controls. This scheme was used by Von Karman in 1918 in the first known tethered rotary-wing platform, and flights to 150 feet are recorded (Reference 1). In 1940, a larger vehicle was built in Germany that Petrides reports "flew successfully to altitudes of several hundred feet but became unstable at higher altitudes and in high winds."

For the multiple tether concept to work, the aerial vehicle must generate enough lift to maintain high tension in all tether cables at all times, and the tether cables must pull at large angles at all times. With a boom length of 10 feet or so, cable tension at the boom should be in the order of 30 percent of the lift. Tether points on the ground must be placed to yield tether cable angles of 45 degrees or so <u>at all times</u>. These requirements represent the main disadvantages of the multiple tether concept. For any given altitude and wind specification, the lifting vehicle will be much larger and require much more horsepower than the equivalent single tether, stabilized rotor, aerial platform. For high altitude systems, a great deal of real estate is required for the dispersed tether cables, and launch and retrieval of the platform involves synchronized translation of each tether point. These latter requirements render the multiple tether concept unacceptable for use in the forward area. Its potential high reliability for long duration missions may be realizable in permanent or semipermanent rear areas where mobility, quick reaction, and low fuel consumption are not critical.

Translation of the tether cable attachment at the aerial vehicle is not recommended for attitude stabilization for several reasons. To be effective, high tensions must be maintained in the cable and large displace-

ments must be made rapidly in a gimballed or pantograph mechanism. The high tension requirement results in a much larger aerial vehicle and the large cable attachment mechanism complicates airframe design (particularly the interface with the landing platform) with possible incompatibilities with placement of the mission payload. Since the servomechanisms must provide large rapid displacements or angular rotations of the cable attachment, the servomechanisms would be larger and probably require more electronic circuitry than the servos in a cyclic pitch control system.

It should also be noted that the cable reaction method for attitude stabilization has not been demonstrated by flight tests. The Canadian Army (Reference 7) used a gimballed cable attachment (See Figure 1) and Petrides reports limited flights". Fairchild Corporation used a pantograph mechanism to translate the cable attachment in their HELIVATOR concept and, again, some flights were made. Insufficient analytical and test data exists to design a cable reaction system for tethered platform stabilization. Further consideration of it and determination of potential advantages in mechanization over cyclic pitch controls is not possible without detailed work and model tests. It can be considered as a potential control concept for any of the lift vehicles considered, and it may be better than exit vanes for a ducted fan.

5.2 Directional Control and Stabilization

The preferred concepts for directional control and stabilization of the various aerial platforms are listed in Table XXIV. Some good alternatives exist but in most cases the configuration of the lift system will dictate the best approach. The calculated effectiveness of the yaw controls is listed in Table XXIII. All valves are satisfactory except for the tandem with a stiff rotor and the multiple fan with motor speed control. The valves for the coaxial and synchropter concepts are based on differential collective pitch control.

In a tethered platform it is feasible to ignore lift control, that is, to operate the rotors at fixed collective pitch and fixed RPM. This simplifies the rotor controls and improves reliability. If this concept were adopted, directional control of the synchropter would be obtained with differential longitudinal cyclic* and control of coaxial machines would be obtained with tip drag devices.

Directional control effectiveness for the reaction driven rotor concepts is not covered in Table XXIII. For cold and hot cycle systems, body mounted nozzles utilizing compressed air or hot gas would be employed. The control effectiveness can be set at any value by choosing the proper nozzle thrust and placement. This is more a matter of power budgeting than stabilization quality. For reaction driven systems using rotor tip ram jets or pulse jets, a control motor coupled to the rotor shaft could be used to generate yawing moments. As an alternative, a small electrically powered fan could be utilized as in main/tail rotor configurations.

* The maximum yaw control moment for the synchropter concept with differential longitudinal cyclic is estimated to be 300 ft/lb.

TABLE XXIV. PREFERRED DIRECTIONAL CONTROL CONCEPTS

Lift System	Control Concepts
Conventional Main Rotor	Antitorque Tail Rotor
Synchropter	Differential Longitudinal Cyclic Pitch Differential Collective Pitch
Coaxial Rotors	Differential Rotor Drag Differential Collective Pitch
Tandem Rotors	Differential Lateral Cyclic Pitch
Reaction Driven Rotor	Body Mounted Control Nozzles Shaft Coupled Control Motor
Ducted Fans	Differential Control Vanes
Multiple Fans	Differential Motor Speed Control

If a good earth or inertial referenced directional sensor is placed in the aerial platform, all of the concepts considered should be able to provide directional control to within ± 2 degrees of the desired heading. With high winds blowing at a large angle to the desired heading, the control system must be able to generate sufficient control to meet the station-keeping requirements and the directional control requirements simultaneously.

The reaction driven rotor systems, the coaxial, the ducted fan, and the multiple fan concepts have omnidirectional flight characteristics. They can meet the station-keeping requirements and point the mission sensor in any selected direction without regard for wind direction. The conventional main/tail rotor helicopter, the synchropter, and the tandem do not have axial symmetry, and the rotor controls, especially directional control, would be designed by the requirement to hold heading and maintain spatial position with 50-knot beam winds. Current Army helicopter specifications require flight in any direction at speeds up to 35 knots (AAH calls for rearward flight at 45 knots) with directional control reserve for rapid turns in the adverse direction. The tail rotor in the tethered platform would certainly be larger, and have a greater control range, than normally found in manned helicopters.

Synchropters currently in service with the Air Force, the HH43B, have sideward flight capability up to about 30 knots. An oversized rotor and an expanded range of lateral cyclic control would probably be required for omnidirectional performance at 50 knots. The tandem configuration would also require more lateral cyclic control than normally provided in manned fore/aft tandem rotor machines.

5.3 Air Vehicle Trim Attitude

Figure 37 illustrates the forces and moments acting on the tethered platform in a wind and shows the relationships that must exist to obtain force and moment equilibrium. If a rotor hub stiffness factor k is defined as follows:

$$k = \frac{M_{HUB}}{Tb_H(\alpha_R - \alpha_F)}$$

the fuselage trim angle can be expressed as

$$\alpha_F = -\frac{H}{T}\left(\frac{k}{1+k}\right) - \frac{D_F + T_{CH}}{T} + \frac{M_C}{Tb_H(1+k)}.$$

For teetering rotors M_{HUB} is zero, k is zero and α_F becomes

$$\alpha_F = -\frac{D_F + T_{CH}}{T} + \frac{M_C}{Tb_H}$$

The fuselage trim attitude was calculated from this expression for a

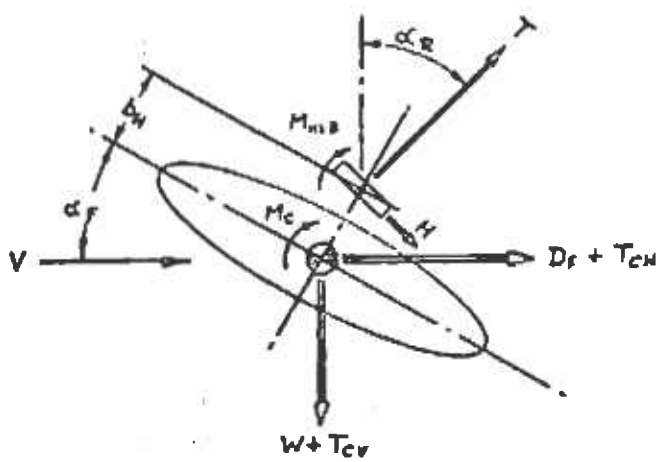

WITH FORCE AND PITCHING MOMENT EQUILIBRIUM:

$$\alpha_R = -\frac{H}{T} - \frac{D_F + T_{CH}}{T}$$

$$\alpha_F = -\frac{(D_F + T_{CH})}{T} + \frac{M_C}{Tb_H} + \frac{M_{HUB}}{Tb_H}$$

Note: Fuselage pitching moments are assumed small compared to hub and cable moments and the sine of all angles are assumed equal to the angles in radians.

Figure 37. Tethered Platform Trim.

number of configurations and is presented in the upper portion of Table XXV together with the rotor and drag areas assumed. Values are shown for pitch and roll trim attitudes with 50-knot head winds and 50-knot side winds respectively. The values do not include moments due to the tether cable but the last column does show the sensitivity of trim attitude to the horizontal component of cable drag. Station keeping at 50 knots involves cable tensions of 200 to 300 pounds and the cable angle at the air vehicle is 30 to 35 degrees. The effective drag of the cable is, therefore, the order of 100 pounds and the trim angle would increase 7.3 degrees.

If a very stiff rotor is assumed, k is large,

$$\frac{k}{1 + k} \approx 1.0$$

$$\frac{M_c}{1 + k} \approx 0$$

and the expression above for fuselage trim attitude becomes

$$\alpha_F = - \frac{H}{T} - \frac{D_F + T_{CH}}{T}$$

which is the same as the expression for the trim attitude of the rotor in Figure 37. In other words, the fuselage tilts with the rotor in hingeless rotor systems.

The trim attitudes of the four basic lift system configurations with hingeless rotors is shown in Table XXV together with data on the multiple fan and the ducted fan. The trim angles for the multiple fan were calculated from the above expression but the valves for the ducted fan were calculated using data from a NASA project (Reference 8) on a 7-foot ducted propeller.

Except for the ducted fan and the multiple fan, the trim attitude does not vary significantly with platform configuration. Trim attitudes of the reaction driven rotor concepts would be substantially the same as the coaxial or synchronter concept.

5.4 Station Keeping

Figure 38 depicts three alternative methods for controlling the position of the aerial vehicle on station. In the first, (a), the air vehicle seeks the position that yeilds a desired angle at the top of the cable. The simplest concept would involve control to a space vertical and would be implemented by measuring angles of the cable relative to the airframe and airframe attitude in space. Any variation from vertical would generate an error signal that would, through appropriate controls, tilt the thrust vector, causing the vehicle to move to the proper position.

TABLE XXV. TRIM ATTITUDE CHANGE WITH AIRSPEED

CONFIGURATION	ROTOR DIA. FT	DISC LOADING LB/FT²	LONG. FLAT PLATE AREA FT²	LAT. FLAT PLATE AREA FT²	PITCH ANGLE DEG	ROLL ANGLE DEG	CABLE DRAG EFFECT DEG/100 LB
HELICOPTER (HINGED ROTOR)(1)							
CONVENTIONAL	15.7	4	5.6	6.7	3.5	4.2	7.3
SYNCHROPTER	15.6	4	7.8	7.8	5.0	5.0	7.3
COAXIAL	15.7	4	7.8	7.8	4.9	4.9	7.3
TANDEM	12.2	4	9.4	12.2	4.9	6.3	7.3
HELICOPTER (HINGELESS ROTOR)(2)							
CONVENTIONAL	15.7	4	5.6	6.7	6.[illegible]	7.3	7.3
SYNCHROPTER	15.6	4	7.8	7.8	8.1	8.1	7.3
COAXIAL	15.7	4	7.8	7.8	8.0	8.0	7.3
TANDEM	12.2	4	9.4	12.2	7.6	9.0	7.3
MULTIPLE FAN	3.4	14	28	21	17.4	14.0	6.2
DUCTED FAN	5.4	40	-	-	50.0	50.0	6.0

Notes: (1) Zero offset of flapping hinge.
(2) Equivalent to large offset of flapping hinge.

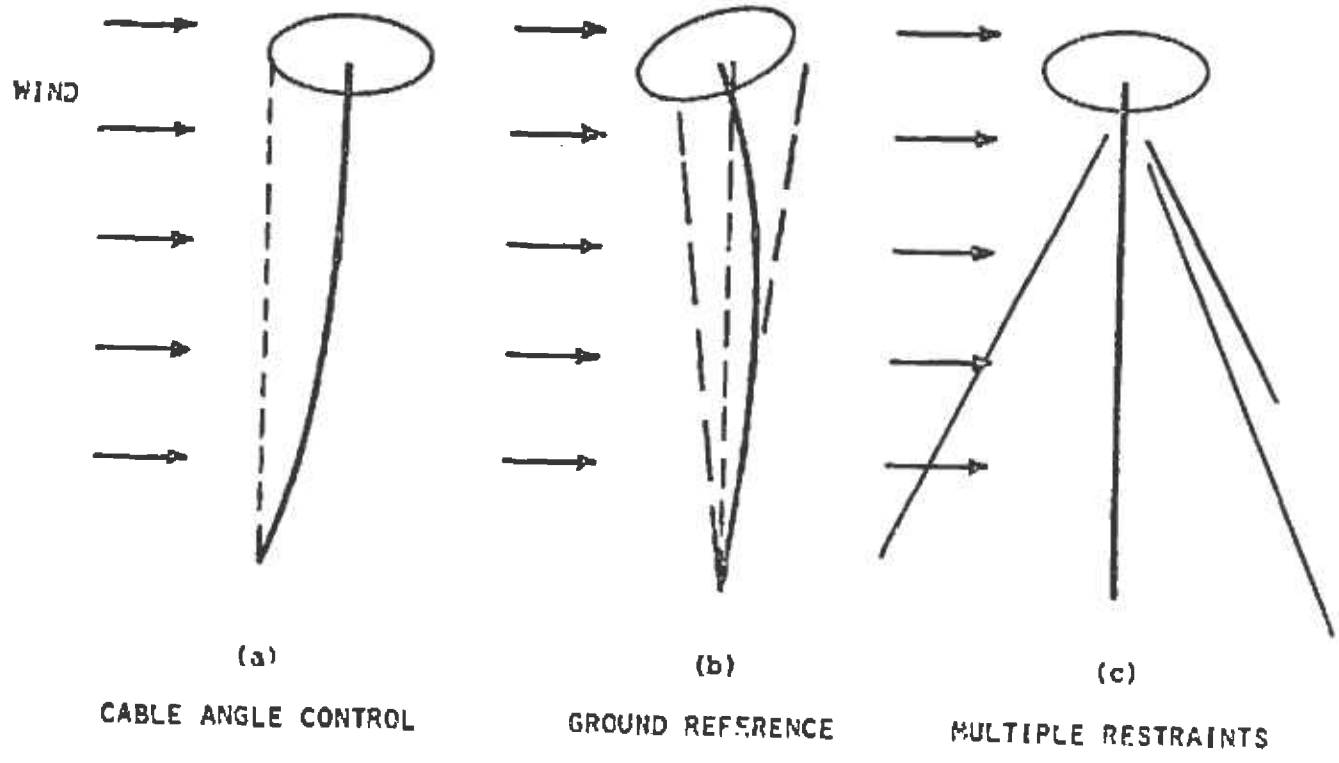

Figure 38. Position Control Concepts.

In the cable angle control concept, the control of the vehicles position is indirect and depends entirely on the wind and the pull exerted on the cable by the air vehicle. For 1000 feet of electric power cable weighing 135 pounds and having a diameter of 0.48 inch, the downwind displacement of the air vehicle in 50-knot winds was determined to be 200 feet with a vertical pull on the cable of 800 pounds. If the pull is reduced to 400 pounds, the displacement increases to 400 feet.

The cable angle control concept is simple and has been used operationally in Kaman's K-137 antenna support system, but it cannot meet the baseline station-keeping requirements of ± 25 meters with reasonable values of lift. It may be a good concept for some missions not requiring tight position control.

The system recommended for station keeping utilizes a ground-based position reference (Figure 38b) and a ground-to-air data link to transmit position errors to the control system in the air vehicle. Several mechanizations are possible, and no difficulty should be experienced in maintaining the vehicle within the allowable ± 5 degree cone. The cable loads used in the aerial vehicle sizing work in Section 3 were all calculated for zero lateral displacement in platform position.

Figure 38 shows a third position control concept utilizing multiple restraints. This approach is not recommended for forward area tethered platforms because of the deployment and reaction time problems and power penalties described in Section 5.1.

The altitude control requirements in the performance specification can be met with a locked winch. All vehicles were sized to carry 1050 feet of cable and the cable tension at the air vehicle was set to maintain a minimum altitude of 950 feet in 50-knot winds.

5.5 Automatic Flight Control Systems

The basic means for stabilizing and controlling the candidate air vehicles was discussed in Sections 5.1 and 5.2 and relative control effectiveness was assessed. Except for Rabenhorst's multiple fan concept, all air vehicles require servomechanisms for three-axis attitude control and some means, air or ground-based, for rotor or fan speed control. Some differences in the number of servos required and in their performance will exist, and these differences should be assessed as necessary before selecting the preferred approach.

The sensors and electronic circuits required to stabilize and control the various vehicles will be functionally if not physically equivalent, and there will be little basis for choosing between aerial platform concepts by comparing automatic flight control systems.

SECTION 6

GROUND EQUIPMENT

Overall system reliability, maintainability and field operability are just as important as the performance of the tethered platform. Therefore, the ground equipment required by each type of tethered platform must be considered in the selection of the best overall approach. The limited scope of the study prevented detailed design of ground components or detailed reliability and maintainability analyses. However, an attempt was made to assess reliability, maintainability and field operability of the various concepts on a relative basis by identifying the essential characteristics of the major components of the ground support system.

This section deals with air vehicle power systems, the tether cable management systems, and the launch/retrieve platforms. Ground equipment for the recommended system is described in some detail in Section 12, and equipment associated with sensor operation and field missions is covered in Section 13.

6.1 Fuel Pumping Systems

The interaction between air vehicle configuration and ground equipment is reflected in fuel flows and cable size and weight. Air vehicle sizing was based on ground pumping pressures of 1000 psi.

Figures 19 and 20 show the variation in cable properties as a function of fuel flow. For the conventional gear-driven rotor system, the calculated fuel flow is 89 lb/hr and the corresponding cable weight and diameter are 0.095 lb/ft and 0.5 inch. The highest fuel flow, 366 lb/hr, occurs with the tip mounted pulse jet. The tether cable for this system would weigh 0.11 lb/ft and have a diameter of 0.58 inch.

The size and weight (and cost) of the fuel pumping system would vary with the platform concept selected, but these variations would be a small percentage of the overall system, size, weight, and cost. Therefore, in the comparison of pumped fuel concepts with electric power systems, a single set of values for size, weight and power of ground equipment was estimated. The size of the fuel pumping station was conservatively estimated at 10 cubic feet and the weight, using commercial heavy duty equipment, at 500 pounds. A one horsepower pump should be able to handle the fuel flow of the selected system.

6.2 Electric Power Systems

Cable sizes and weights, and air vehicle motor weights, were all based on a 400 H_z, 3-phase, 2200-volt ground power system. Cable weights and sizes are shown in Figures 27 and 28, and the values for the aerial platforms studies vary from 0.12 to 0.2 lb/ft and 0.45 inch to 0.6 inch. The calculated motor horsepower requirements vary from 81 for the

synchropter to 176 for the ducted fan.

The size, weight and cost of the ground power generating system will vary considerably with the power requirements of the selected concept. Table XXVI shows estimated sizes and weights for a 120 KVA generating system. The generator's size and weight were based on data on commercially available machines. A diesel engine was assumed as prime mover.

If an aircraft type turboshaft engine and a specially designed lightweight generator were assumed, the total weight of the electric power station could probably be reduced from 4000 pounds to 1000 pounds. The cost and fuel consumption would certainly increase, but these options should be kept in mind while evaluating competing concepts.

6.3 Compressed Air Systems

The estimated physical properties of ground equipment for the cold compressed air system are also listed in Table XXVI. The compressor was rated at 500 psi and 6.0 lb/sec and requires a 2500-horsepower drive system. A turboshaft engine was assumed to keep weight and size down to reasonable values.

6.4 Cable Management Systems

The winches in the various systems are sized by the diameters and minimum bend radii for the tether cables. A driven storage reel was assumed in each system in lieu of powered capstans, and cables are stored under tension. One thousand feet of cable is stored in two lays to prevent excessive crushing forces on the stored cable. Winch sizes and weights are given in Table XXVI for typical electric and pumped fuel systems and for the cold compressed air systems.

Winch drive power is estimated at 15 horsepower for electric and pumped fuel systems and 25 horsepower for the compressed air concept.

As described in Section 3.3.3, the electric power cables were designed to a surface temperature of 150°F to keep the diameter low. This will probably dictate winch cooling during ground running of the aerial vehicle and flight operation with partial cable deployment. A winch cooler with a rating of 3 BTU/sec has been estimated and is described in Table XXVI as part of the electric system equipment.

6.5 Launch/Retrieve Platform

No attempt was made in this study to optimize the air vehicle/platform interface. With the possible exceptions of the ducted fan and the multiple fan concepts, each of the vehicles could be configured to mate with selected launch and retrieve mechanisms.

Throughout the study a simple flat platform with a central hole for cable

TABLE XXVI. COMPARISON OF MAJOR GROUND STATION COMPONENTS

	ELECTRIC SYSTEMS				PUMPED FUEL SYSTEMS		PUMPED COLD COMPRESSED AIR SYSTEM		
	PRIME MOVER	GEN.	WINCH	WINCH COOLER	FUEL SYSTEM	WINCH	PRIME MOVER	COMP. & COOLER	WINCH
SIZE	96" Long 35" Wide 48" High	33" Long 35" Wide 30" High	36" Dia 48" Long	12" Long 48" Wide 36" High	30" Long 20" Wide 24" High	24" Dia 40" Long	100" Long 36" High 36" Wide	100" Long 72" Wide 48" High	79" Dia. 48" Long
WEIGHT (LB)	2000(1)	2000(2)	600	200	500(2)	500	1000(3)	1000(2)	2300
POWER	175 HP	120KVA	15 HP	3 KW	1 HP	15 HP	2500	2200 HP	25 HP

(1) Diesel engine.
(2) Commercial grade equipment.
(3) Aircraft type turboshaft engine.

routing was assumed for launching and retrieving the air vehicle. In comparing concepts, the only effect on platforms is a change in size and possibly structural strength. If the integral fuel concept is eliminated from further consideration due to its excessive size (with 8 to 12 hours endurance), platform size would probably vary from 10 feet by 10 feet for the smallest air vehicles to 14 by 14 for the largest.

SECTION 7

SYSTEM SAFETY

By recognizing the potential dangers, and by applying well known design rules, all concepts can be made safe for their intended operation in the field. None of the systems involve material handling, equipment operation, or potential hazards that are new to the field armies. The following safety review is intended to bring to the surface those potential hazards which may bear on the selection of the best overall approach for the tethered platform.

7.1 Fire

All systems require fuel. Diesel oil or jet engine fuel will be used in the electric power generating systems, and jet engine fuel will be used in the air vehicle in all pumped-fuel concepts. Diesel oil and JP-4 fuel have essentially the same flash point, but the air vehicle's fuel will be pumped at high pressure. The high pressure lines and equipment must be separated from ignition sources to minimize fire dangers. The nominal pumping pressure of 1000 psi is well within the capability of existing qualified equipment, and the fuel flows of 0.3 and 0.4 gallon per minute do not present much of a hazard.

7.2 High Voltage

The 2200-volt power system would not present any new hazards to field operations. The design rules and handling precautions used in existing 220/440 volt field power generators would be applicable.

The winch would be operated remotely (in all systems) and shock dangers from insulation failure should not exist. The power cables are critical to system operation as well as system safety and the new designs must be properly qualified .

7.3 Explosions

Air at 500 psi is dangerous, and appropriate safety margins must be applied to the designs of all mechanical components if a system using pumped compressed air were selected. The accumulator for pressure regulation should be kept as small as possible and should be shielded. The full length of cable in such a system would contain about 25 cubic feet of air, and it would be prudent to shield the winch.

7.4 High Velocity Downwash

The ducted fan could cause some problems when operating (launching and retrieving only) over sandy and rocky soils, and it may be necessary to place protective mats around the launch platform.

The light disc loading rotor systems will have much lower downwash velocity and their small size should not cause any problems. Depending on the soil conditions, protective mats, 12 to 15 feet in length, could be placed on the ground around the launch platform to prevent stones and debris from being blown around. Lightweight, fabric mats could be used and rolled up out of the way after launch or retrieval.

7.5 Unshielded Rotors

Rotor height from the base of the air vehicle varies from 5 to 7 feet, but all vehicles will be operated from a platform mounted on the bed of a truck. Rotor height from the ground will be 10 feet or more.

7.6 Lightning

The tethered platform will be expected to operate in weather where danger of lightning strikes exists. The Lightning Transient and Research Institute, under a grant from Kaman Aerospace Corporation, provided the following technical guidance.

A conducting sheath should be placed on the outside of all cables to prevent the cables from being damaged by lightning. A No. 4 AWG equivalent hard drawn copper braid could handle 95 percent (up to 100,000 amps) of the lightning strikes and could serve as the tension member in the tether. A layer of polyethelyne, 35 mils thick, placed under the braid would insulate any other conducting elements in the tether from the voltage drop due to lightning currents.

The shield of the tether cable should be well grounded, and transient protection devices should be installed on the signal lines between the ground control station equipment and the winch. The control station must be constructed to act as a Faraday cage for personnel, and personnel should not be allowed on the ground in the vicinity of the tether point when a storm approaches. Simple warning devices such as corona points on poles or micro ammeters monitoring changes in the electric field should be used to warn of lightning dangers. If the military situation permits, the elevated platform should be retrieved when electric storm activity is high.

Equipment within the air vehicle can be protected from lightning transients by a conducting skin on the vehicle. If metallic rotor blades are used, a good conducting path must be provided from the blades to the shield of the tether cable.

SECTION 8

SYSTEM EVALUATION

Several characteristics of tethered platforms have been analyzed in the preceding sections, and it should be clear that many options exist for implementing the baseline system specifications. A great deal of quantitative data has been generated, but it was not possible, within the scope of this program, to set up a deterministic evaluation model to establish the single best overall approach. Some characteristics such as reliability were not assessed except in a qualitative way. Others such as complexity can only be judged in a general and relative manner. Nevertheless, the critical data is available and good selections can be made.

Table XXVII lists the factors that have been considered in the selection process. The task has been to find, within the baseline specifications,

(1) the best-rotary wing lift concept
(2) the best system for driving the rotary wing(s)
(3) the best way to get the long endurance, and
(4) the best system for stabilizing and controlling the aerial platform.

The search for the best approach is presented here in a progressive manner: first, certain concepts are rejected; second, basic advantages and disadvantages of good concepts are described; and third, the competing systems (the finalists) are described and a selection is made of the system best suited to meet baseline specifications. In Section 9, the baseline specifications are examined, certain changes are suggested, and an alternative design is recommended.

8.1 Rejected Concepts

8.1.1 Autogyro

The autogyro was considered only for the sake of completeness. Its basic flight characteristics prevent it from meeting the station-keeping or payload-pointing requirements.

8.1.2 Integral Fuel

The maximum endurance available with platforms carrying fuel in airborne tanks is approximately 12 hours. Regardless of how the lift would be generated, these vehicles would be very large, heavy, and costly. There are no significant offsetting advantages in the tether cable or ground stations when the integral fuel concept is compared against the pumped-fuel or electrically-powered concepts.

TABLE XXVII. SYSTEM EVALUATION FACTORS

PERFORMANCE
PLATFORM STABILITY
STATION KEEPING
FUEL ECONOMY
OPERATIONAL CONSIDERATIONS
COMPLEXITY OF OPERATION
CREW SIZE & SKILL LEVELS
RELIABILITY & MAINTENANCE
MOBILITY (SIZE & WEIGHT)
REACTION TIME
DETECTABILITY
SAFETY
ENVIRONMENTAL COMPATIBILITY
LOGISTICS
DEVELOPMENT PROGRAM REQUIREMENTS
AVAILABILITY OF QUALIFIED COMPONENTS
TECHNICAL RISK
PROCUREMENT COSTS
COMPLEXITY OF COMPONENTS
COMPONENT RATINGS

8.1.3 Pumped Compressed Air

The system using cold high-pressure air pumped from the ground and tip nozzles to drive the rotor uses 1600 pounds of fuel per hour of flight. The poor overall efficiency of the system together with the high tension loads on the large tether in 50-knot winds defeats this concept. The feasibility of the tether cable is also in doubt.

8.1.4 Tip mounted Ram and Pulse Jets

The fuel consumption of the ram and pulse jet systems was calculated to be approximately 350 pounds per hour. This is seven times higher than the best electrically powered systems and twice as high as the cold cycle, pumped fuel system. The vehicles are as heavy and the rotors are as large as several of the gearbox driven rotor concepts.

When compared to gear-driven rotor systems with turboshaft engines, the simplicity of the tip jet systems appears to be overwhelming. But notwithstanding the several demonstrations of this concept in small one-man helicopters, the concept is unproven. The small, high RPM rotors have tip centrifugal accelerations of over 2000 g's, and significant fuel distribution, combustion, and rotor blade dynamic problems must be overcome before a reliable, long-life system could be produced.

The inability to reduce the IR signature of a tip jet system is a further deterrent for forward area missions.

8.1.5 Multiple Fans

One concept utilizing eight fans was examined. No size and weight advantages were found, and the horsepower required is 50 to 60 percent higher than in more conventional concepts.

Except for novelty, motivation for the multiple fan concept is hard to find. Beyond its poor efficiency (without compensating size and weight advantages) is its questionable controllability. Rabenhorst (Reference 2) recommends control by varying the speed of the fans. This requires a good bit of hardware, it would probably require overrated rotors, and it generates pitching and rolling moments slowly; also, flow interaction between adjacent rotors will reduce the effectiveness of fan speed changes well below what might be predicted.

8.1.6 Ducted Fan

The ducted fan requires twice the horsepower (and fuel) of the competing electrically powered concepts. This is offset by the use of simple, small, fixed pitch fans in lieu of large cyclic-pitch-controlled rotors. If the speed differences (3700 RPM vs 700 RPM) and relative drive shaft and bearing problems are added to the scales, what is left over from the comparison is the question of stability and control.

Free-flying ducted fans have not demonstrated adequate stability in gusty air or at moderate airspeeds much less an ability to control their attitude in a precise manner or provide a suitable platform for sensors. The addition of a tether would probably worsen the stability and control problem unless the tether cable forces were used in the attitude control system as in Fairchild's HELIVATOR.

8.2 Candidate Concepts

8.2.1 Reaction Driven Rotor Concepts

Three tip driven concepts remain for consideration, all utilizing fuel pumped from the ground, and burned in a turbine engine. The rotor is driven by:

(1) expanding compressed air in (rotor) tip nozzles (cold cycle)
(2) exhausting products of combustion in tip jets (hot cycle)
(3) by burning fuel with compressed air in a tip jet.

The essential characteristics of the aerial platform for each of these concepts are as follows:

	Cold Cycle	Hot Cycle	Tip Burning
Empty Weight (lb)	721	465	444
Gross Weight (lb)	967	701	704
Rotor Diameter (ft)	19.3	17.0	17.1
Engine Rating (hp)	440	288	139
Fuel Flow (lb/hr)	184	142	237

The tip burning system is somewhat smaller and lighter than the cold cycle system, but it is substantially less efficient in fuel consumption. It will have combustion and rotor blade dynamic problems similar to the ram jet concept and there is no reason to choose it over the cold cycle system.

The hot cycle system is also smaller and lighter than the cold cycle system and has a lower fuel consumption, but it has substantial techno-

logical disadvantages. A rotor life of 5000 hours or more is essential for the long endurance platform. No reasonable projection of existing technology could predict such a life for a hot cycle rotor. The cost of the rotor in a hot cycle system, if it could be developed, would surely be several times the cost of the rotor in a cold cycle system. As in the case for tip burning, there is insufficient reason to choose hot cycle over cold cycle for a reaction driven system.

Aside from the elimination of the rotor drive gearbox and drive shaft, a reaction driven rotor concept offers a fully omnidirectional flight capability for tethered platform missions. Good flexibility exists for payload placement in the air vehicle and any orientation can be held on station, independent of wind direction.

All reaction driven systems require auxiliary devices for heading stabilization and control. For the cold cycle system, the best approach is to employ control nozzles mounted on the airframe and bleed compressed air from the turbine driven compressor (as done by Dornier in Keibitz). With proper selection of nozzle thrust level and moment arms, good yaw control should be possible without excessive power drain. Pitch and roll attitude control should be implemented with rotor blade cyclic pitch controls.

The cold cycle reaction driven rotor, utilizing a turboshaft engine-driven compressor (or integral compressor) and fuel pumped from the ground, represents a good approach for the long endurance tethered rotary-wing platform. It can be implemented with existing technology (except for the rotor all the hardware is probably available), and its characteristics are well known. Kaman designed and developed one of the first cold cycle systems and its K-17 first flew in 1958. Sud Aviation produced the Djinn cold cycle helicopter and Dornier has been developing the Do32 for some time. Dornier's Keibitz tethered platform, currently under development for the Federal Republic of Germany, is a direct application of Dornier's Do32 technology. Cold cycle rotor drive systems have not been widely used in free-flying helicopters because of their poor fuel economy. In a tethered system, this is not a fatal flaw.

8.2.2 Turboshaft Engine Driven Rotor Concepts

A large family of aerial platforms can be designed utilizing turboshaft engines, gearboxes and shafts to drive the rotors, and fuel pumped from the ground to obtain long endurance. In Section 3.2 only the conventional main/tail rotor configuration was sized for pumped fuel, but the comparable characteristics of platforms using other rotor types can be estimated accurately from the data on electrically powered shaft-driven rotor systems given in Section 3.3. The data on pumped fuel platforms in Table XXVIII was obtained by scaling the electric system data to pumped-fuel/electric-power ratios for the conventional rotor configuration. As expected, there is little difference in weight or horsepower and the selection of the best shaft-driven concept must be based on other factors.

TABLE XXVIII. COMPARISON OF PUMPED FUEL, SHAFT DRIVEN CONCEPTS

	Conventional Helicopter	Coaxial	Synchropter	Tandem
Empty Weight (lb)	391	422	414	396
Gross Weight (lb)	613	641	635	616
Rotor Diameter (ft)	16.1	16.3	16.2	12.5
Engine Rating (HP)	131	117	115	123
Fuel Flow (lb/hr)	89	79	78	83

The relative size of the four concepts can be assessed by comparing the sketches in Figures 30 through 33 on the electric powered counterparts. All could be operated from truck-mounted platforms without difficulty, but the coaxial and the tandem concepts may present some problems in transport. The height of the coaxial rotor was estimated at 8.7 feet, and height restrictions for road travel within Europe and the U.S. will leave only 4 feet or so for launch platform height above the road bed. The tandem concept may require removal of at least one rotor blade to prevent excessive overhang from the rear of the transporting vehicle.

The large airframe of the tandem rotor machine would make it easier to detect visually or by radar, but its displaced rotors give it excellent moment balancing characteristics and large tether cable forces can be handled with less restrictions on cable load offset. However, the tandem normally uses differential rotor lift to obtain this high degree of control with external payloads and, as described earlier, differential collective pitch controls (for total lift control) are unnecessary in a tethered platform and should be avoided.

Complexity of mechanization varies in the four concepts. Two rotors, two drive shafts with associated gearboxes, and two sets of rotor controls must be provided for each vehicle. The coax with its inner and outer shafts and its piggyback controls is the most complex. The conventional system is dominant in the helicopter world because of its superior high-speed performance. But two different sets of drive shafts, gearboxes, rotors and rotor controls must be designed, developed, manufactured, and maintained. The synchropter and the tandem utilize a single design for rotors, main drive shafts, and rotor controls, and the synchropter has only one gearbox and does not have long, high-speed drive shafts.

Insofar as reliability, maintainability and cost can be judged by counting mechanisms of differing designs and complexity, the synchropter is the best of the candidate shaft-driven rotor systems.

Station-keeping and directional control in the presence of high winds was discussed in Section 5.2. Of the shaft-driven concepts, only the coaxial is purely omnidirectional. The tandem could be sized for sideward flight at 50 knots, and the tail rotor of the conventional configuration would certainly be designed by the requirement to hold the airframe within ± 2 degrees of a selected compass heading with 50 knot winds coming from the side or the rear. The synchropter would not have directional control problems, but it may not be able to provide sufficient side force to meet the station keeping requirements with winds of 50 knots from the side. In the synchropters produced by Kaman, only the windward rotor is used to generate side forces. These aircraft, produced for DOD, have demonstrated sideward flight with satisfactory directional control at airspeeds up to 35 knots.

8.2.3 Electrically Powered Concepts

The comparison of turboshaft-driven rotor concepts given above is completely applicable to the four electrically powered concepts that remain to be evaluated. Nothing in the drive system or the source of energy will change the relative ranking of the competing concepts. Therefore, this last step in the evaluation is an assessment of the merits of electrical power and motors relative to pumped fuel and turboshaft engines.

Electrical power systems are feasible for the tethered platform. Designs have been presented to Kaman over the past few years for lightweight motors utilizing state-of-the-art designs for shafts, bearings, lubrication systems, cooling systems and insulation. In 1958, Kaman flew an HTK synchropter with a 240-horsepower motor that weighted only 188 pounds. Induction motors have good torque-speed characteristics and 4-pole, 400 H_z motors with operating speeds near 12,000 rpm do not require excessive gearing to drive the rotors. Generating power at 2200 volts results in a reasonable diameter and weight for the tether cable and is well within the state of the art of insulation materials for the motor.

The ground power generating system can also be developed with a straightforward application of existing technology. A diesel or a turboshaft engine can be used to drive the generator, and the only special requirement is the need for generator speed control during starting. If the weight of the ground power station is not critical, the necessary 2200 volts, 3 ϕ, 400 H_z power could be generated with existing 220/440 volts power units and a transformer used to get 2200 volt power for transmission to the aerial platform.

The overall weight of the electrical power system is much higher than the weight of the ground equipment in pumped fuel systems. Table XXVI lists the components values, and if a diesel engine is used together with a commercial 2200 volt generator, the ground station would weigh 4800 pounds. If an existing generator were used with a 440/2200 volt transformer, the total weight would be close to 6000 pounds. If a turboshaft engine and a special lightweight 2200 volt generator were used, the total weight would be only 1200 to 1500 pounds.

On a procurement cost basis, the electrical power systems and the pumped fuel systems are approximately equal. Estimates of unit costs, in limited production, of motors, 2200 volt generators, and controls were received from three companies and varied from $16,000 to $20,000 for a complete system. If a diesel engine were used to drive the generator, the total cost of the power system would be very close to the cost of the fuel pumping system, its controls, and the airborne turboshaft engine.

On an efficiency basis, the electrical power systems have the edge over pumped fuel concepts. Assuming diesel drive, an electrically powered synchropter would require 50 pounds of fuel per hour of operations while

the turboshaft powered synchropter would require 78 pounds/hour.

The pumped fuel, turboshaft engine concepts have two significant advantages over their electrically powered counterparts. First, fully developed and qualified engines and fuel pumping systems exist, and second, the air vehicle can be retrieved safely if the ground power system (fuel pump power, fuel pump, or pump controls) fails. Fuel would be pumped to a small tank in the aerial vehicle and a reserve maintained for retrieval.

Both of these advantages could be overcome, or at least largely so, by funded developments of the critical components in the electrical power system. The potential reliability of electric motors and generators is certainly higher than the potential reliability of aircraft turboshaft engines. Although there is more equipment in the power train, an existing diesel, perhaps overrated slightly, coupled to a properly qualified generator, and motor, could give better overall mission reliability than the fuel pumping system and the airborne turboshaft engine.

8.3 Selected Concept

Until suitable electrical power systems are developed and their field reliability demonstrated to be superior to turboshaft engines, the tethered platform should be powered by a turboshaft engine and long endurance obtained by pumping fuel from the ground.

The choice of lift system is not as clear. The shaft-driven rotor systems are much more efficient in their use of fuel than the cold cycle reaction drive system; they are smaller and lighter, but, except for the synchropter and perhaps the tandem, they will probably cost more and be more difficult to maintain. The synchropter may not be able to meet the station-keeping requirement in 50-knot side winds.

The cold cycle reaction driven rotor system is the best approach for implementing the baseline specifications. It is a proven concept and can meet the station-keeping requirements with 50-knot winds from any direction.

Attitude stabilization and control should be obtained by cyclic pitch controls, and collective pitch mechanisms should be avoided if at all possible. The lift of the vehicle should be allowed to vary with the wind and power controlled to maintain a constant RPM of the fixed pitch rotor. Yaw control in the cold cycle concept should be obtained by expanding compressed air in body mounted nozzles.

A turboshaft-driven tandem rotor is a good alternative to the cold cycle concept for the baseline specifications.

SECTION 9

ANALYSIS OF THE BASELINE SPECIFICATION

The results of the study have clearly demonstrated the impact of certain specification parameters on the selection of configuration for the aerial platform. The requirement for 16 hours endurance makes fuel economy a critical factor and dictates either pumped fuel or ground generated electric power. Station keeping in 50-knot winds drives the selection toward omnidirectional rotor systems while the requirement for a high degree of stabilization and control has eliminated marginal attitude control concepts. All other specifications - rate of climb, altitude, payload, and atmospheric conditions - impact the size and power of the tethered platform but do not affect the selection.

In the course of the study, conferences were held with government groups developing mission sensors, and possible changes to the baseline specifications were discussed. The station-keeping requirement was examined in some detail since station keeping in high winds causes the airframe to tilt at fairly large angles to achieve force and moment equilibrium. In Section 5.4 the trim attitude in 50 knots was estimated to be about 12 degrees.* For many body-mounted payloads, a variation of ± 12 degrees in elevation angle will have an adverse effect on size, weight and cost. With stabilized, trainable sensors, the impact might not be as great but terrain scanning would be skewed by the trim attitudes of the airframe.

The only practical means for reducing the trim attitude angles of the airframe involve movement of the cable attachment. This concept was previously rejected as a means for achieving dynamic stability and control, but it could be used for quasi-static control of fuselage attitude. Moderately fast servos could translate the cable attachment point in response to signals from an attitude gyro. Two-degree-of-freedom motion would have to be provided to maintain a level fuselage for all combinations of wind directions and fuselage headings.

Although a possible solution to the trim problem, the mechanization of moveable cable attachments is complex and was not pursued. It was generally agreed that tight station keeping should be waived except for those missions where precise knowledge of the platform's position was necessary and when it was impossible or impractical to track the vehicle in a displaced position. Analyses showed downwind positions of approximately 500 feet with 400 pounds of cable tension and 300 feet displacement with 700 pounds of cable tension in 50-knot winds.

---

* This value assumes that the tether cable exerts no moment; a fixed cable attachment point below the c.g. will make it larger.

No difficulty should be experienced in tracking the aerial vehicle from the ground station. The instrumentation would be similar to that required for position sensing in the station-keeping concept, and a ground-to-air dynamic control loop would be eliminated. Flight tests at Kaman with the K-137 antenna support vehicle have also shown that yaw control performance is much better when the cable tows the rotor than it is when the rotor tows the cable.

If station keeping over the ground tether point is waived, the airframe can be maintained in a level attitude at all times regardless of wind direction and magnitude. The air vehicle will drift to that position where the tether cable will balance all horizontal forces on the rotor(s) or airframe. The control concept can be implemented simply with a vertical gyro measuring pitch and roll attitude error and generating commands for the longitudinal and lateral cyclic pitch servos. If vehicle translations due to gusts are unacceptable to the mission sensors, they can be damped and reduced in any one of three ways: (1) by sensing the vehicle's translational accelerations or velocities, (2) by sensing instantaneous changes in the cable angle from a quasi-static reference value, or (3) by tracking the vehicle from the ground and sending stabilization commands to the air vehicle based on changes in location from a quasi-static position. Reference 9 indicates that Dornier has a combination of methods (1) and (2) in their prototype Keibitz platform. Method 3 is identical to the basic overhead station-keeping concept with a slowly varying reference position.

All aerial vehicles would benefit from a relaxation of the tight station-keeping specification in the face of 50-knot winds. In addition to the improvements in performance and the simplification of controls, rotor blade cyclic stresses would be significantly reduced and rotor blade life, for all designs, would be increased. Some fuel savings could also be achieved since the horsepower required to support the downwind cable with a (substantially) vertical thrust vector is less than the horsepower required to tow the cable for overhead station keeping at 50 knots*.

Downwind station keeping should also improve the survivability of the system since the opposing forces could not infer the position of the ground station by tracking the air vehicle.

Based on the above considerations, the requirement for station keeping within 25 meters of a point directly over the ground station was officially deleted from the baseline specification in favor of a requirement for a level airframe under all wind conditions. The impact of this change in specification is discussed in the next section.

---

* See Figure 51 for cable deployment with essentially vertical thrust and constant horsepower. Horsepower (and fuel consumption) could be reduced until the bottom cable angle in steady winds approached a minimum clearance value of 30°.

SECTION 10

REEVALUATION OF THE SELECTED BASELINE SYSTEM

In Section 8.2.2 several turboshaft driven rotor systems were anlyzed and the synchropter was judged to be superior to the coaxial, tandem and conventional configurations in terms of reliability, maintainability and cost. With the requirement for precision station keeping deleted from the baseline specification, the synchropter was reevaluated and subsequently recommended as the best overall lift concept for the tetnered platform. That reevaluation of the synchropter, and the previously selected cold-cycle reaction driven rotor concept, is summarized below.

10.1 General Characteristics

The essential physical characteristics of the cold cycle and synchropter platforms are listed in Table XXIX, and engineering sketches are shown in Figures 39 and 40.

TABLE XXIX. GENERAL CHARACTERISTICS OF COMPETING CONCEPTS*

	Cold Cycle	Synchropter
Empty Weight (lb)	720	407
Gross Weight (lb)	967	629
Rotor Diameter (ft)	19.3	16.2
Engine Rating (hp)	440	114
Fuel Flow (lb/hr)	184	89

* These values are from the Task 1 sizing study and give equal performance on the original specifications

The synchropter is 300 pounds lighter and its fuel flow is only 48 percent of the cold cycle value. For the specified endurance of 16 hours, the cold cycle system requires 450 gallons of fuel whereas the synchropter needs only 220 gallons.

Evaluating complexity of the two concepts is very difficult since the concepts are drastically different. However, the significant and measurable aspects of system complexity are its costs, its reliability, and its maintenance requirements. While a precise quantitative evaluation of these parameters cannot be made at this time without detailed

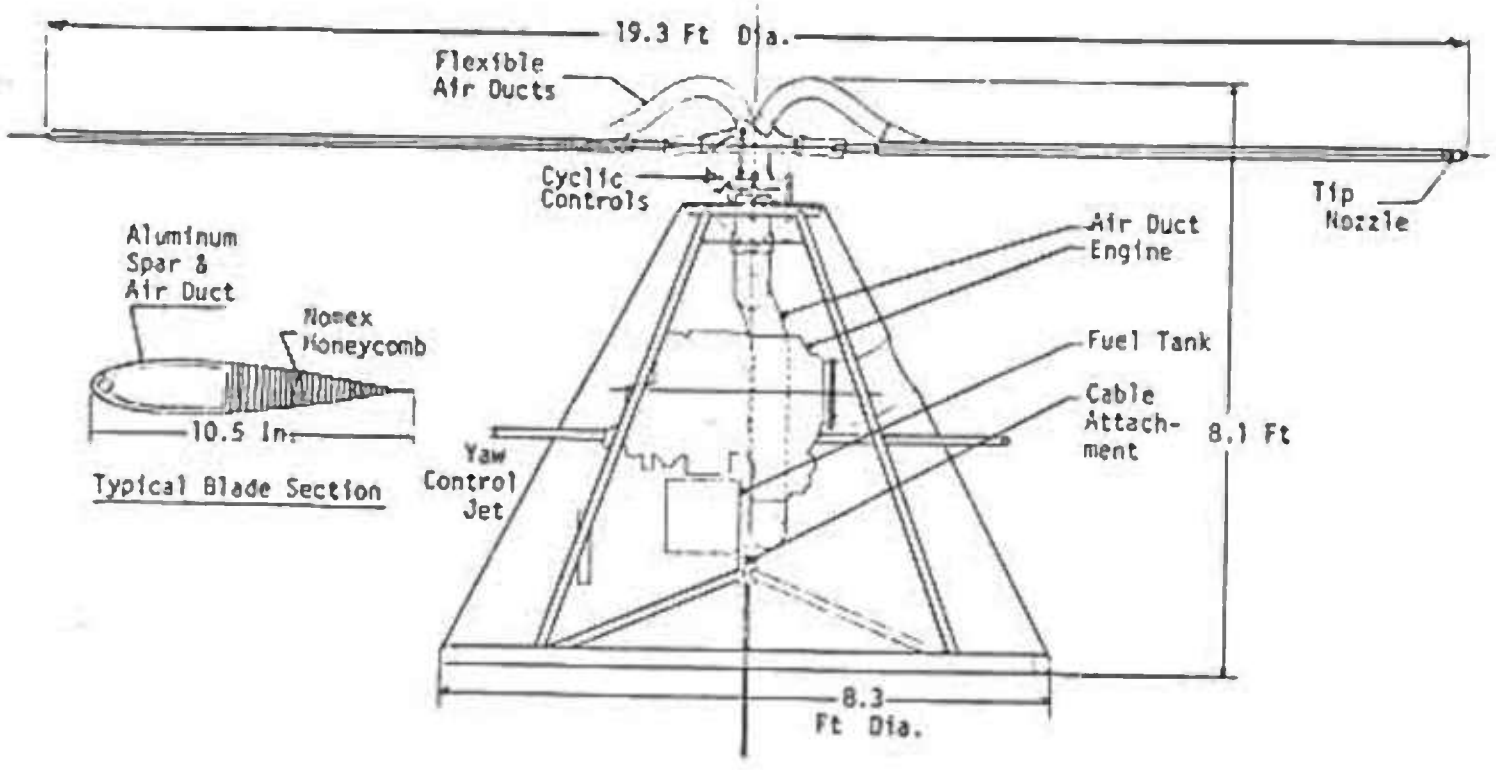

Figure 39. Cold Cycle Tip Driven Rotor.

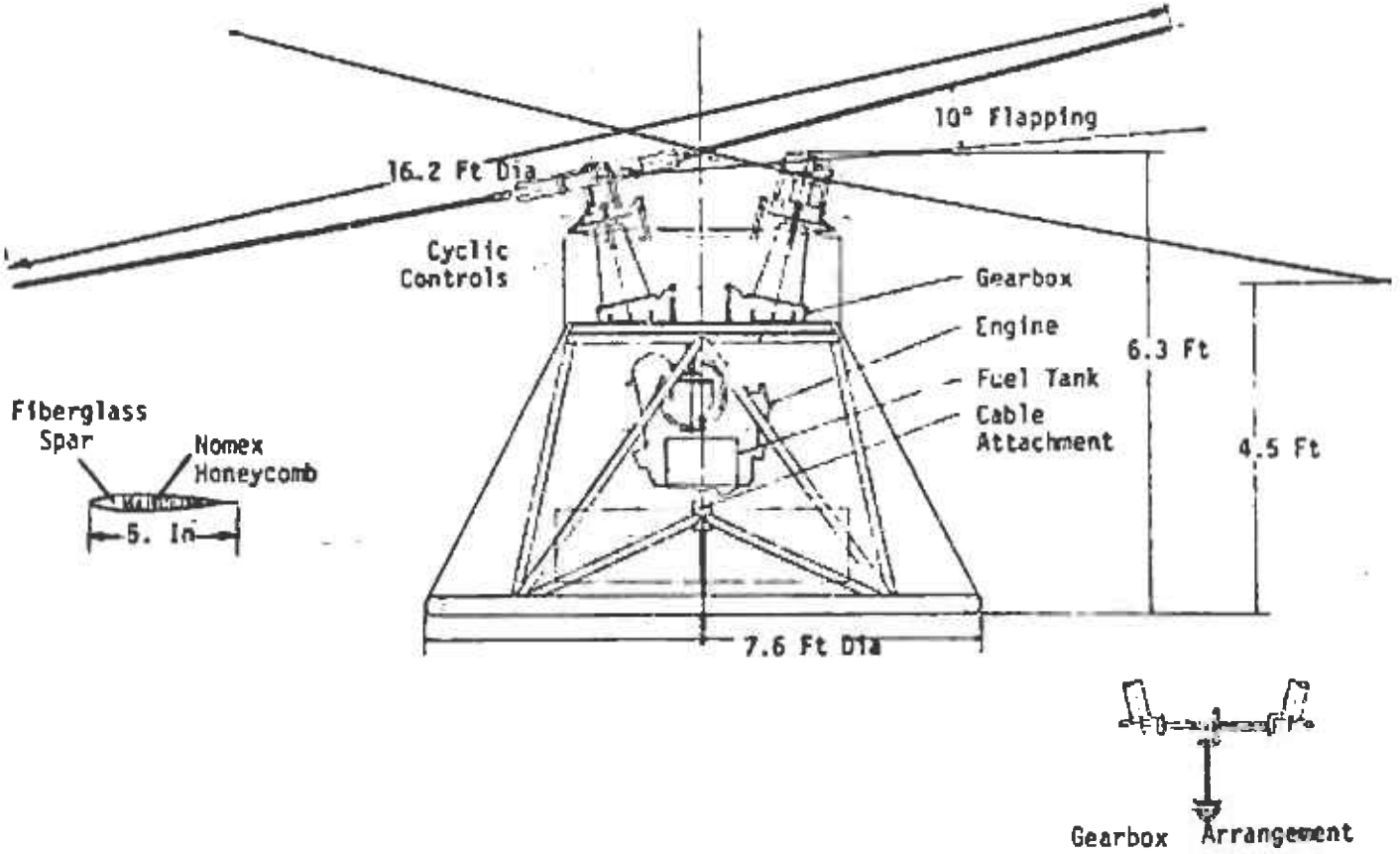

Figure 40. Turboshaft Powered Synchropter (Recommended Configuration).

designs, cost analyses, and reliability and maintainability projections, it is possible to rake some meaningful comparisons and to assess them on a relative basis.

The cold cycle system has a large (440 horsepower) turbine engine with excess bleed air capability (special air load stages or a separate shaft-driven compressor are alternatives), whereas the synchropter has a small (115 horsepower) turboshaft engine. The cold cycle system ducts hot compressed air (270° to 300°F) from the engine through a rotary seal to flexible ducts on each of the rotor blades (two) to hollow structural spars or tubes in each blade to expansion nozzles at the tip of the blades. The synchropter uses a gearbox with two output shafts that drive two, 2-bladed rotors by direct application of torque at the rotor hubs.

Each system employs longitudinal and lateral cyclic pitch control (no collective pitch control) so the synchropter has two sets of controls, whereas the cold cycle system has only one. But the synchropter uses the same controls for heading control (differential longitudinal cyclic), while the cold cycle machine has a separate control system using bleed air nozzles. The sensors and electronics in the Automatic Flight Control System would be the same for both vehicles.

10.2 Air Vehicle Costs

Significant cost differences will show up in the engines and the rotor blades. The 440 horsepower engine for cold cycle will cost $25,000 to $30,000 compared to $10,000 for the synchropter's engine. A separate shaft driven air compressor is probably the lowest cost approach for cold cycle and would add $8000 to $10,000 to the cost of the cold cycle drive.

The cost of the rotor blades will depend on the designs and fabrication processes chosen for each. If a similar process is chosen for both, the blades on the synchropter should be much less expensive than blades on the cold cycle air vehicle. In addition to its larger size and tip nozzles, the inboard section of the cold cycle blade must contain additional structural elements to carry outboard spar loads around the air duct entrance. The cold cycle blades may also require insulation to prevent hot spots in critical structural areas and the blade design must account for differential expansion of materials with temperature.

If untwisted, uncambered blades are used in both platforms, the blades would be interchangeable, and production costs would be reduced. With the differences noted above in blade requirements, it is not unreasonable to expect a cost ratio approaching two-to-one. If so, total rotor blade costs, per aerial platform, will be approximately the same. Development costs (to achieve the same lifetime) of the cold cycle blades would be appreciably higher than for synchropter blades of the same design. If a nonmetallic blade is used in the synchropter (as

shown in Figure 39) to eliminate radar reflections, the development cost advantages, and perhaps unit production cost advantages, would disappear.

Teetering, underslung rotors and similar hub designs and rotor controls are shown in Figures 39 and 40.

The hub in the synchropter must transmit shaft torque to the blades, but blade centrifugal forces and bending moments will be the critical factors in the design of hubs and blade retentions, not the torque loads. The total centrifugal force in the hub of the synchropter was estimated at 27,000 pounds; in the cold cycle system it was 58,500 pounds. Built-in coning will eliminate the large out-of-plane bending in both systems. Therefore, the hub in the cold cycle system will be more expensive than the hub in the synchropter for the same design lifetime. But the synchropter has two hubs and costs per airframe will be higher. The dollar differences will depend entirely on the quantities made. For 25 air vehicles, the cost of hubs and cyclic controls should be approximately $2000 for the cold cycle system and only $1000 to $2000 higher, per air vehicle, for the synchropter.

The gearbox in the synchropter is an added cost item. A gearing schematic is shown in Figure 40 to illustrate the drive concept but should not be considered as the selected design. The gearbox requires development, but is relatively simple and can be developed utilizing well-known gear and bearing designs, lubrication systems, and fabrication processes. Spiral bevel gears can be produced for low horsepower transmission (100 hp at high rpm, 50 hp at low rpm) with long lives at reasonable costs. In limited quantities, and where small size and low weight are not critical, designs favoring assemblies in lieu of integral gears and shafts will result in lower costs. A conservative estimate of cost for a limited quantity of gearboxes, including rotor drive shafts, would be $4000 to $6000.

Airframe unit costs are estimated to be $3500 for the synchropter and $6000 for the cold cycle vehicle. These values are based on parametric weights on each vehicle adjusted by the weight estimate of the synchropter given in Appendix A and an estimated cost of $35 per pound of structure, skin, equipment supports, etc.

Using a cost of $1000 for a synchropter blade and $2000 for a cold cycle blade, the cost comparison of the competing concepts is summarized in Table XXX.

TABLE XXX. COST COMPARISON OF COMPETING CONCEPTS

	Cold Cycle	Synchropter
Engine	$25,000	$10,000
Compressor	$8,000-$10,000	--
Gearbox & Drive Shafts	--	$4,000-$6,000
Hubs and Cyclic Controls	$2,000	$3,000-$4,000
Rotor Blades	$4,000	$4,000
Airframe	$6,000	$3,500
Total	$45,000-$47,000	$24,500-$27,500

The table does not include the costs of sensors or servomechanisms for attitude stabilization and control. These items would add about the same amount to each vehicle.

10.3 Reliability

Mission reliability for the tethered platform will be paced by the mission sensors and the automatic flight control system, not the lift or propulsion systems. If the mechanical systems are designed for long life (5000 hours or more) there would be some difference between the projected failure rates of the competing concepts, but the reliability of both mechanical systems would be more than satisfactory. Some failures would undoubtedly occur in the power plants and fuel systems at more or less equal rates for both concepts, but the critical flight safety items would be the Automatic Flight Control Systems. The sensors, electronics and servos are essentially the same for the cold cycle or synchropter, and high quality components and selective redundancy would give satisfactory mission reliability for both concepts.

10.4 Maintainability

If the unmanned tethered platform is to be practical for use in forward

areas, it must be designed so that maintenance is unnecessary, or nearly so. All the knowledge gained through hundreds of thousands of flight hours on Army and Navy helicopters, the current developments on HLH, UTTAS, and AAH, and the continuing advanced research and development programs on R & M sponsored by DOD can be applied to eliminate all maintenance except refueling, filling oil tanks, and repairing or replacing damaged parts. Repair in the forward area would be restricted to simple processes and replacement of readily accessible (by design) assemblies or components.

If these maintenance goals are projected for design of the cold cycle and the synchropter, field maintainability cannot be used as a selection criterion. Rear base or depot maintenance of the concepts would be different, but this should not be an overriding factor unless field damage is high or component lives are low. Blade changes (per aircraft) would take longer on the synchropter, but an engine change could be made in a fraction of the time that would be required on the cold cycle system.

Changing the gearbox would be the most time-consuming maintenance action on the synchropter since it requires removal of rotors and rotor drive shafts, and decoupling of cyclic pitch control links. Initial deployment of the tethered platforms would probably involve removal of some gearboxes for inspection at progressive intervals (100, 500, 1000 hours, etc.), but once the design service life is demonstrated in the field, gearbox changes would be infrequent.

Depot maintenance would be a factor in concept selection if, in the interest of lower development costs, components are designed to short lives or overhaul periods. Some differences in engine TBO intervals or engine life might also be expected as a consequence of the differences in horsepower requirements. The large engine selected for the cold cycle vehicle may be operated at or near its power limits, while the engine selected for the synchropter could be operated well below its ratings with a small penalty in weight and fuel consumption.

10.5 Detectability

Aural detection range for the cold cycle/tip nozzle concept was calculated to be 2.4km, and for the synchropter, 3.6 km. These values are based on detection by the unaided human ear in a quiet forest. The difference in detection range is due almost entirely to the lower rpm of the larger cold cycle rotor. Both systems can be quieted by reducing rpm.

Infrared detection ranges of 5.0 km and 2.3 km were calculated for the cold cycle and the synchropter assuming unobscured viewing of the hot power stage of the turboshaft engines. The engine outlets in each

vehicle can be shielded and in almost all cases the engine exhaust will be directed away from the enemy. The power penalty for shielding and cooling in the synchropter would be 10 horsepower or so while in the cold cycle system it could be 60 horsepower or more. It may be necessary to cool the exhaust plume from the relatively large engine in a cold cycle concept.

Radar detection ranges were not calculated for the competing concepts. The cold cycle system has a larger airframe and a larger rotor than the synchropter and would have a larger radar cross section. Nonconducting rotor blades can be used in the synchropter for further reductions in radar cross section.

Airframe sizes are substantially the same, and visual detection would be equally difficult.

10.6 Transportability

The height of the cold cycle system from its base to the rotor air duct is about 8 feet. (See Figure 39.) The height of the synchropter is about 6 feet. (See Figure 40.) General arrangement studies were made of the launch platform and cable management system for the synchropter (See Section 12), and all equipment can be pallet mounted and placed on the beds of existing standard Army 2½-ton trucks. The height of the cold cycle system would dictate special integrated designs or the use of trailers with low beds.

Fuel requirements for the competing systems are significantly different. A standard 2½-ton cargo truck carries enough fuel (1200 gallons) for 90 hours of operation with the synchropter. This fuel would last only 42 hours with a cold cycle powered aerial vehicle.

10.7 Adaptability to Electric Power

Although it is not a system or mission requirement, and did not influence the selection of a tethered platform concept, the synchropter's adaptability to electric power is a significant attribute. The potential of electric power was discussed in previous sections, and development of critical electric power components was recommended. If such a development were pursued, and electric power was demonstrated to be superior to pumped fuel for long endurance, the turboshaft engine in the synchropter could be replaced by an electric motor with little or no impact on any other part of the aerial vehicle.

SECTION 11

IMPACT OF VARIATIONS IN SPECIFICATIONS ON SELECTED AIR VEHICLE

Task 2 of the Statement of Work involved a study of the impact on the selected aerial vehicle of variations in performance requirements from the baseline specifications. The computer program used in Task 1 was utilized to determine the impact on vehicle size, weight, and horsepower for the turboshaft powered synchropter.

Cable load data was not available for the relaxed station-keeping condition at 50 knots, so the variations were examined under the original baseline specifications. When the air vehicle is allowed to drift downwind in order to maintain a level airframe, the cable tension and top angle must result in a trimmed flight condition. These cable loads are not a simple function of the horsepower required (see Figure 21, cable tension vs flow rate) as they are for station keeping at a fixed point in space.* The additional effort required to generate new cable loads for Task 2 was not warranted. The primary purpose of the task was to establish the sensitivity of the chosen design concept to changes in specifications. The variations examined are listed in Table 1. The changes in the air vehicle resulting from the changes in performance specifications are shown in Table XXXI. The impact of a change in gust values is discussed in Section 11.7.

11.1 Payload Size and Weight Variations

The synchropter has approximately 50 cubic feet of useable internal space for payload. A variation in payload size from 18 inch by 18 inch by 12 inch to 30 inch by 30 inch by 20 inch, would have no impact on the air vehicle. Reducing the weight of the payload from 200 pounds to 150 pounds causes the gross weight of the air vehicle to change from 629 to 546 pounds, and the rated horsepower from 114 to 107. Increasing the payload weight to 300 pounds results in a gross weight of 805 pounds and an engine rating of 134 hp.

11.2 Endurance Variations

Changing the endurance of the mission from 16 hours to 8 or 23 hours has no impact on the sizing of the air vehicle.

11.3 Tether Cable Length Variations

Reducing the tether length from 1000 feet to 500 feet saves 12 hp and reduces gross weight by 36 pounds. Increasing it to 2000 feet increases engine rating 59 hp and increases gross weight by 124 pounds.

---

* For the synchropter, the trim conditions also vary with the direction of the wind relative to airframe axes. The airframe is, however, always maintained in a level attitude at the desired compass heading.

TABLE XXXI. IMPACT OF VARIATIONS IN SPECIFICATIONS

	Baseline Synchropter	Payload		Cable Length		Climb Rate		Atmos.	Combined	
		150lb	300lb	500ft	2000ft	250ft/min	1000ft/min	6000,95°F	Min.	Max.
Empty Weight (lb)	407	374	480	372	524	407	426	415	322	600
Payload (lb)	200	150	300	200	200	200	200	200	150	300
Fuel Load (lb)	22	22	25	21	29	22	24	22	19	29
Gross Weight (lb)	629	546	805	593	753	629	650	637	491	929
Rotor Diameter (ft)	16.2	15.4	17.9	15.4	18.2	16.2	16.4	15.3	14.2	19.7
Power Required (hp)										
Climb; 0 Wind	82	74	99	76	99	77	93	85	62	133
On-Station; 50 knots	84	79	95	62	128	84	86	84	56	138
Engine Rating (hp)	114	107	134	102	173	114	126	124	84	201
Fuel Flow (lb/hr)	89	86	98	84	114	89	95	87	74	116

A winch for 1000 feet of cable, stored in two lays would have a diameter of 24 inches and a length of 40 inches. If only two lays of cable are used to prevent high compressive loads, the winch for 2000 feet of cable would grow to 38 x 50 inches.

11.4 Rate of Climb and Descent Variations

Changing the rate of climb has little impact on air vehicle weight, size, and horsepower. Increasing the rate of descent would increase the power rating of the cable management system, which would increase its size and weight.

Little experience exists for helicopters in vertical descent at high rates, and flight tests would have to be conducted with a tethered helicopter to determine the feasibility of the high descent rate of 1000 ft/min. Steep descents with an untethered HH43B synchropter showed loss of lift and control at approximately 600 ft/min. Retrieval by cable with high lift and power on the rotor may increase the safe limit.

11.5 Atmospheric Variations

The baseline vehicle was sized for on-station operation at 4000 feet, 95°F. Increasing the specification value to 6000 feet, 95°F increases the engine rating, at sea level, standard day, from 114 hp to 124 hp.

11.6 Combined Effects

The air vehicle was resized to the following specifications.

	Minimum Performance	Maximum Performance
Payload Weight (lb)	150	300
Cable Length (ft)	500	2000
Rate of Climb (ft/min)	250	1000
Atmospheric Conditions	4000 ft, 95°F	6000 ft, 95°F
Winds (knots)	50	50

These conditions represent combinations of the lowest and the highest values of specification parameters. The corresponding variations in size, weight and power of the aerial vehicle are:

	Minimum Performance	Baseline Specifications	Maximum Performance
Rotor Diameter (ft)	14.2	16.2	19.7
Gross Weight (lb)	491	629	929
Engine Rating (hp)	84	114	201
Fuel for 16 hours(gals)	182	219	285

Estimated size and weight of major ground components are:

	Minimum Performance		Maximum Performance	
	Size (in.)	Weight (lb)	Size (in.)	Weight (lb)
Winch	24x20	300	38x50	800
Launch/Retrieval Platform	84x105	200	117x146	350
Fuel Pumping System	35x20x18	350	42x30x24	600

11.7 Gust Variations

Transient response of the tethered synchropter to gusts was studied with the aid of an analog computer. Fore and aft motions and pitch attitude responses to sharp-edged and sinusoidal changes in airspeed were obtained for hover and 50-knot steady-state conditions at 1000-feet altitude. Longitudinal motions were studied since the attitude changes of the synchropter are largest when a gust, of given magnitude, is perpendicular to the plane containing both rotor shafts (a fore/aft gust) since the pitching moments developed by the rotors are additive. If the gust approaches from the side, the angle of attack of one rotor is increased, the other decreased, and a smaller upsetting moment is generated.

Linearized, two-degree-of-freedom equations suitable for study of small rigid body dynamics were programmed on an analog computer. Rotor dynamics were represented by a flap angle lag due to pitch rate. Feedback for control and stabilization included pitch attitude, pitch rate, displacement (cable angle change), and velocity. The cyclic pitch control servomechanism was assumed to have a first-order lag.

The equations programmed were:

$$m\ddot{x} = \frac{\partial F_x}{\partial x} x + \frac{\partial F_x}{\partial \dot{x}} \dot{x} + \frac{\partial F_x}{\partial \theta} \theta + \frac{\partial F_x}{\partial \dot{\theta}} \dot{\theta} + \frac{\partial F_x}{\partial \delta_1} \delta_1$$

$$I \ddot{\theta} = \frac{\partial M}{\partial x} x + \frac{\partial M}{\partial \dot{x}} \dot{x} + \frac{\partial M}{\partial \theta} \theta + \frac{\partial M}{\partial \dot{\theta}} \dot{\theta} \quad \frac{\partial M}{\partial \delta_1} \delta_1$$

$$\delta_1 = k_1 \quad x + k_2 \quad \dot{x} + k_3 \theta + k_4 \dot{\theta} - k_5 \dot{\delta}_1$$

Derivatives for the above equations are listed in Table XXXII and were calculated for a synchropter with the following characteristics:

Gross Weight = 613 lb
Rotor Tip Speed = 600 ft/sec
Rotor Radius = 8.1 ft
Rotor Solidity = .0634
Rotor Hub to c.g. Distance = 2.54 ft
c.g. to Cable Attach. Distance = 2.0 ft
Cable Tension = 200 lb
Cable Length = 1000 ft

TABLE XXXII. STABILITY DERIVATIVES

Derivative	Units	Hover	50 knots
$\frac{\partial F_x}{\partial x}$	lb/ft	- 0.20	- 0.20
$\frac{\partial F_x}{\partial \dot{x}}$	lb/ft/sec	- 0.12	0.67
$\frac{\partial F_x}{\partial \theta}$	lb/rad	-813.5	-813.5
$\frac{\partial F_x}{\partial \dot{\theta}}$	lb/rad/sec	5.46	7.60
$\frac{\partial F_x}{\partial \delta_1}$	lb/rad	836.0	490.2
$\frac{\partial M}{\partial x}$	ft-lb/ft	- 0.40	- 0.40
$\frac{\partial M}{\partial \dot{x}}$	ft-lb/ft/sec	0.32	- 1.70
$\frac{\partial M}{\partial \theta}$	ft-lb/rad	-400.8	-400.8
$\frac{\partial M}{\partial \dot{\theta}}$	ft-lb/rad/sec	- 13.87	- 19.32
$\frac{\partial M}{\partial \delta_1}$	ft-lb/rad	-2123	-1245

No difficulty was experienced in finding values for the feedback gains that would give satisfactory stabilization of the tethered platform. Typical dynamic responses to sharp-edged gusts are shown in Figure 41 for hover and 50-knot flight conditions. Response to a sinusoidal gust is shown in Figure 42, and the pitch attitude response is replotted in Figure 43 and scaled to a 10-knot gust. The maximum attitude excursion is less than 2 degrees as required by the baseline specification. Values for the feedback gains are listed in Table XXXIII.

TABLE XXXIII. AFCS PARAMETERS

Parameter	Units	10-kt gust Criterion	35-kt gust Criterion
Cable angle feedback, k_1	rad/ft	0.02	0.02
Velocity feedback, k_2	rad/ft/sec	0.09	0.22
Pitch attitude feedback, k_3	rad/rad	1.5	1.5
Pitch rate feedback, k_4	rad/rad/sec	0.75	0.75
Time constant of the servo, k_5	sec	0.15	0.15

If the AFCS gains are not altered, and the linearized equations are assumed to be valid, the maximum pitch attitude in response to a 35-knot sinusoidal gust would be 6.5 degrees and the response to a 50-knot gust would be approximately 9 degrees. The actual response would probably be larger than these values due to nonlinearities and physical limitations of servos and controls, but the synchropter should be controllable and should be able to recover from brief exposures to gusts of 35 knots. Gust magnitudes above 35 knots are seldom seen and little is known about rotary-wing aircraft responses in this region.

Increasing the feedback gains reduces the attitude disturbances. If the velocity feedback to the rotor control is increased from 0.09 to 0.22, the 2-degree pitch attitude criterion can be met at 35 knots.

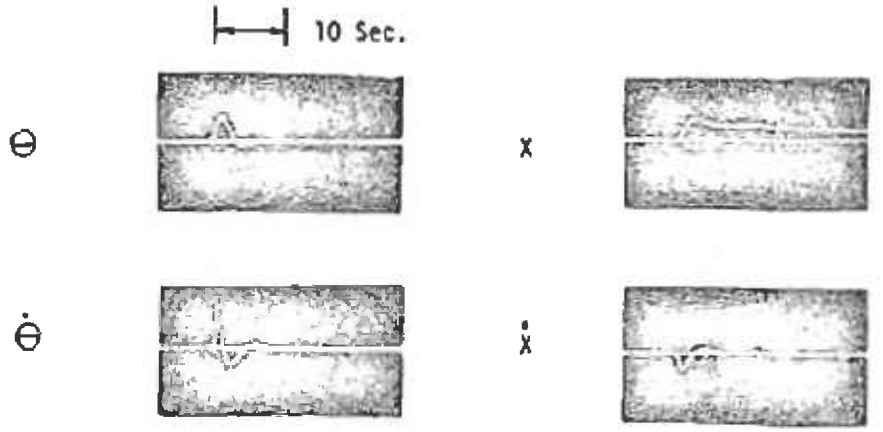

(a) Hover

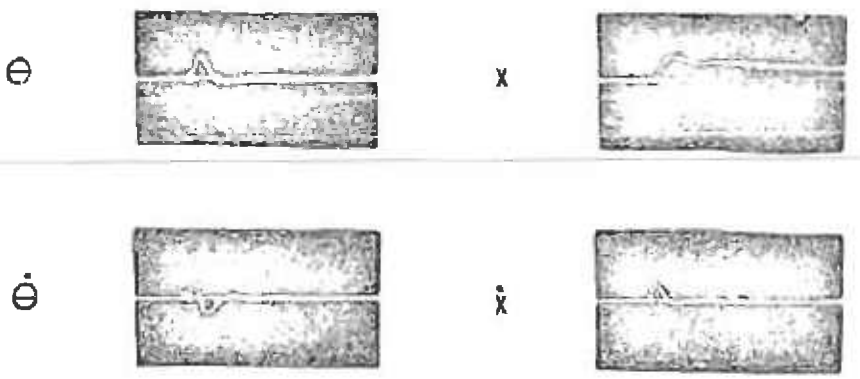

(b) 50 Knots

Figure 41. Typical Response to Sharp-Edged Gust.

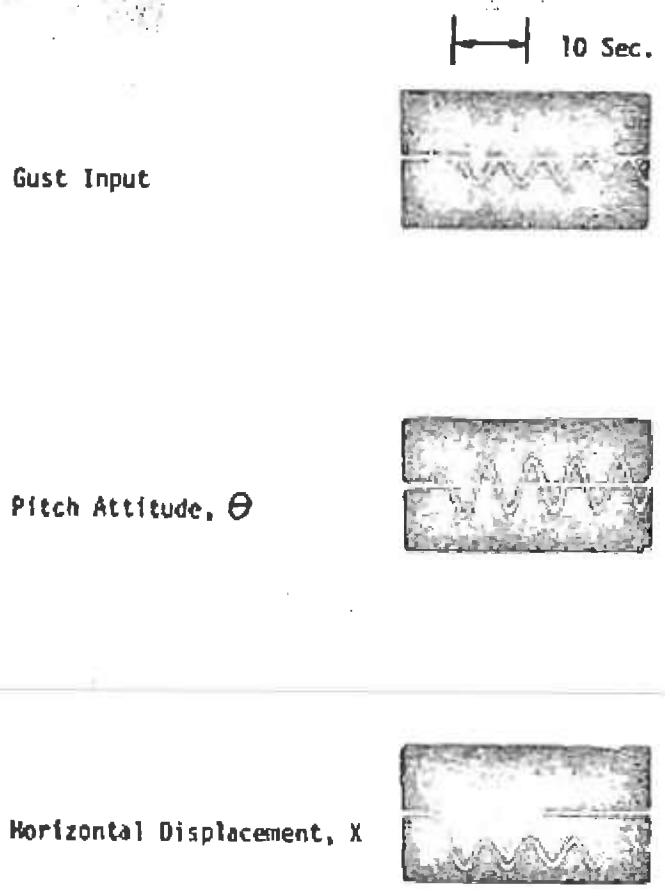

Figure 42. Typical Response to Sinusoidal Gust.

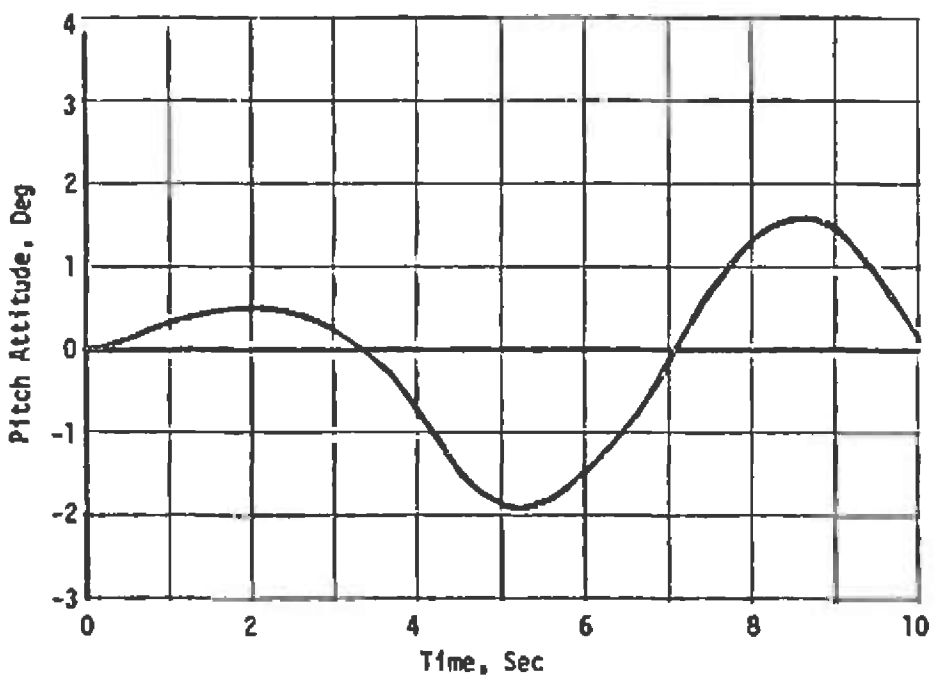

Figure 43. Pitch Attitude Response to 10-Knot Sinusoidal Gust.

SECTION 12

RECOMMENDED SYSTEM

A synchropter, driven by a turboshaft engine, with fuel pumped from the ground through a tube in the tether cable is recommended as the best overall approach to meeting the requirements specified for a tethered platform. This section of the report presents a brief description of the recommended air vehicle, its major subsystems, and the major elements of support equipment associated with air vehicle operation. The information presented is intended to convey a realistic picture of an operational system, but no attempt has been made to optimize designs or equipment arrangements.

12.1 Air Vehicle

The configuration of the recommended air vehicle is shown in Figure 40.

12.1.1 Rotor

Two counter-rotating, intermeshing two-bladed rotors, 16.2 feet in diameter, are mounted on separate shafts which are laterally separated and canted outboard 12.5 degrees from the vertical centerline. Each rotor has 2 degrees of pre-cone built in and mounted to the rotor shaft by an underslung teetering pin set at 30 degrees of negative δ3. An elastomeric bearing is incorporated in the blade retention fitting for blade feathering and the pitch horn is on the leading-edge side of the blade. The rotors are operated at constant collective pitch.

For manufacturing simplicity and low cost, the blades have a NACA 0012 symmetrical airfoil with no twist. The main structural member of the blade is a molded leading-edge beam containing unidirectional glass filaments which run from the blade tip, loop around two spools for retention bolts at the root, and return to the tip. The trailing section consists of contoured Nomex honeycomb. The spar and trailing edge are covered with oriented fiberglass cloth to provide torsional stiffness and a smooth skin. Weights are located inside removable tip caps on each blade and are installed during manufacturing to balance the interchangeable blades.

12.1.2 Rotor Drive

The rotor drive gear train is enclosed in a single gearbox with an overall reduction ratio of 8.6:1 in three stages. The output shaft of the engine drives a spiral-bevel gear set with 1.72:1 ratio for the vertical jack shaft, which in turn drives a cross shaft through a 2:1 spiral-bevel gear set. Each end of the cross shaft drives a rotor shaft through a left-hand and right-hand spiral-bevel gear set of 2.5:1 ratio. The central gear on the cross shaft also drives a power take-off for a 5 KVA alternator. A lube pump is driven by the vertical jack shaft to

pressure lubricate all gears and bearings in the gearbox housing.

The housing is made up of four cast aluminum sections with piloted flanges and bolted together. All gears are straddle-mounted in the housing to assure proper alignment and center distances for long life operation.

12.1.3 Engine

The total power required, including alternator drive, is 114 hp. Figure 40 shows an Airesearch GTP 30 turboshaft engine with integral lube system. The engine is mounted from and under the top deck of the airframe. The rotor drive gearbox is also mounted on this deck, thus assuring proper alignment of the engine output with the gearbox input.

Fuel flow is controlled to maintain a constant rpm of the engine.

12.1.4 Structure

The basic structure of the air vehicle is an aluminum tubular frame similar to a radial engine mount. A circular tube base of 90 inches diameter is connected to a 45-inch-diameter tubular top ring by a series of truss tubes to form a rigid frame 46 inches high. Two transverse channel sections across the top of the upper ring forms the mounting structure for the gearbox and engine. A pyramid of tubes reaches up from the base ring to the cable attachment fitting on the vehicle's vertical centerline 17 inches above the base.

Nonstructural aluminum skins are attached to four "Z" section ring formers to enclose the vehicle in a truncated cone shape. These skins are easily removable for complete access to the interior for payload installation and maintenance.

12.1.5 Cable Attachment

The tether cable is attached to the aerial vehicle through a universal joint. A flex hose conveys the fuel from the tether cable to the aircraft fuel tank, and two coaxial fittings are provided for connecting the data transmitter and command receiver to the coaxial cables in the tether cable. Details of the tether cable assembly are shown in Figure 17 and the calculated diameter and weight are 0.5 inch, and 0.095 lb/ft. A copper wire sheath with conductivity equivalent to AWG No. 4 should be added to the cable for lightning protection.

12.1.6 Payload Integration

The compact design of the synchropter drive system provides ample space and freedom of location for installation of mission payloads. The level airframe attitude and the freedom to choose compass headings independent of wind direction simplify payload design and integration.

Figures 44, 45 and 46 show typical payloads with widely varying requirements. Two large planar array radar antennas are shown in Figure 44 fixed to the airframe. Figure 45 shows an imaging sensor in a stabilized gimballed mount and Figure 46 shows an unstabilized wide angle sensor.

12.1.7 Retrieval With Power Failure

The pumped fuel synchropter can carry reserve fuel for safe retrieval in the event of a failure in the fuel pumping system. However, if a failure occurs in the turboshaft engine or its fuel controls, little can be done to retrieve the vehicle without damage. An autorotation landing on the small platform is not possible, and designing for a free flight autorotation landing by remote control would add a great deal of cost and complexity to the system that appears unwarranted. It would perhaps be better to consider redundant engines sized for sharing the load on station but large enough to insure safe tethered retrieval. As an alternative, it would be possible to recover high value payloads by parachute. In the event of a power failure, the rotor blades, and the tether cable could be severed, and parachutes deployed to provide a soft landing of the complete airframe and payload.

12.1.8 Vibration Levels

The vibration levels required for sensor installation (See Table III) are not unusually low and should be achievable by careful design. If necessary, vibration isolation devices can be used in the payload installation or on the gearbox to isolate the airframe from rotor vibrations.

12.1.9 Weight and C.G. Location

The empty weight of the synchropter was calculated to be 470 pounds. This is 63 pounds above the empty weight computed for the baseline synchropter by the parametric sizing model. A weight breakdown for the recommended air vehicle is given in the Appendix.

The c.g. of the empty vehicle was calculated to be 40 inches below the rotor hubs.

12.2 Fuel System

The fuel control system in the air vehicle is shown schematically in Figure 47. The ground-based system is shown in Figure 48. When the fuel falls to a preset RESERVE level, a fuel valve in the aircraft is opened permitting fuel to be pumped from the ground. When the FULL level is reached in the aircraft fuel tank, the valve closes causing the ground pump to be dead headed and the ground system fuel pressure to rise. The pressure rise activates a switch and causes a valve to divert fuel from the ground pump back to the ground reservoir. Pressure

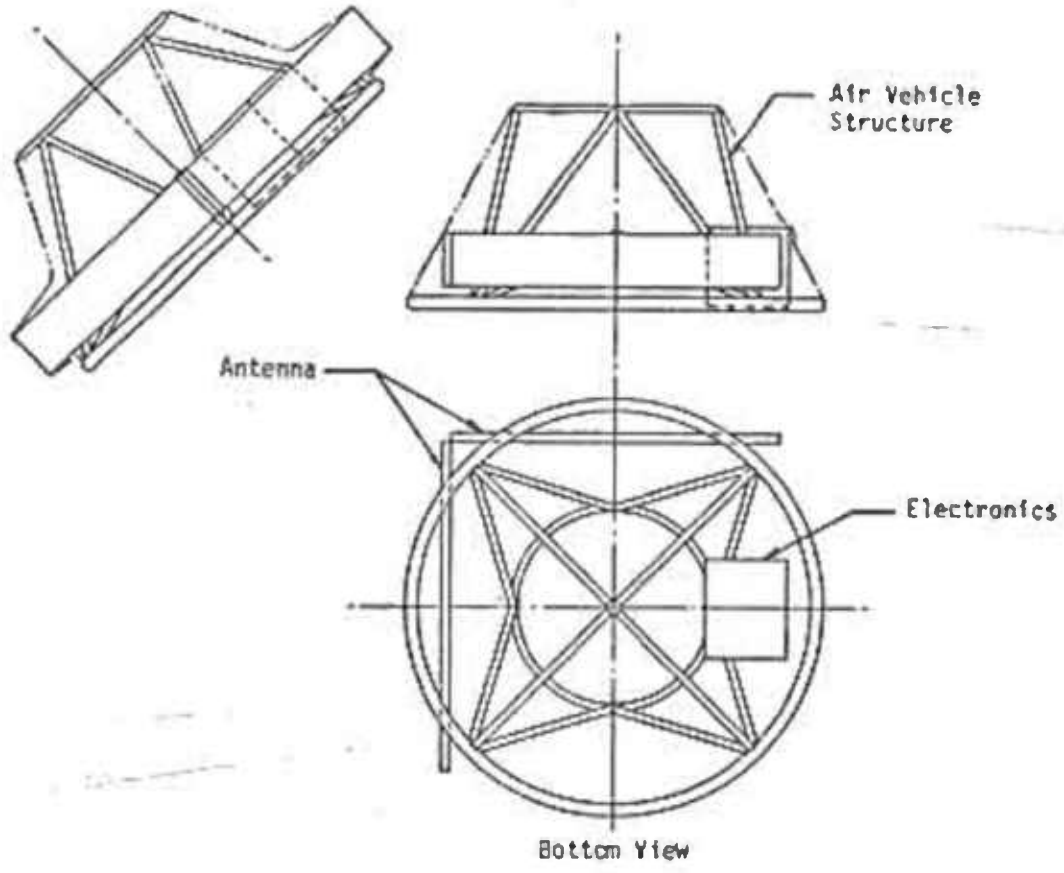

Figure 44. Typical Installation of Large Planar Array Radar Antenna.

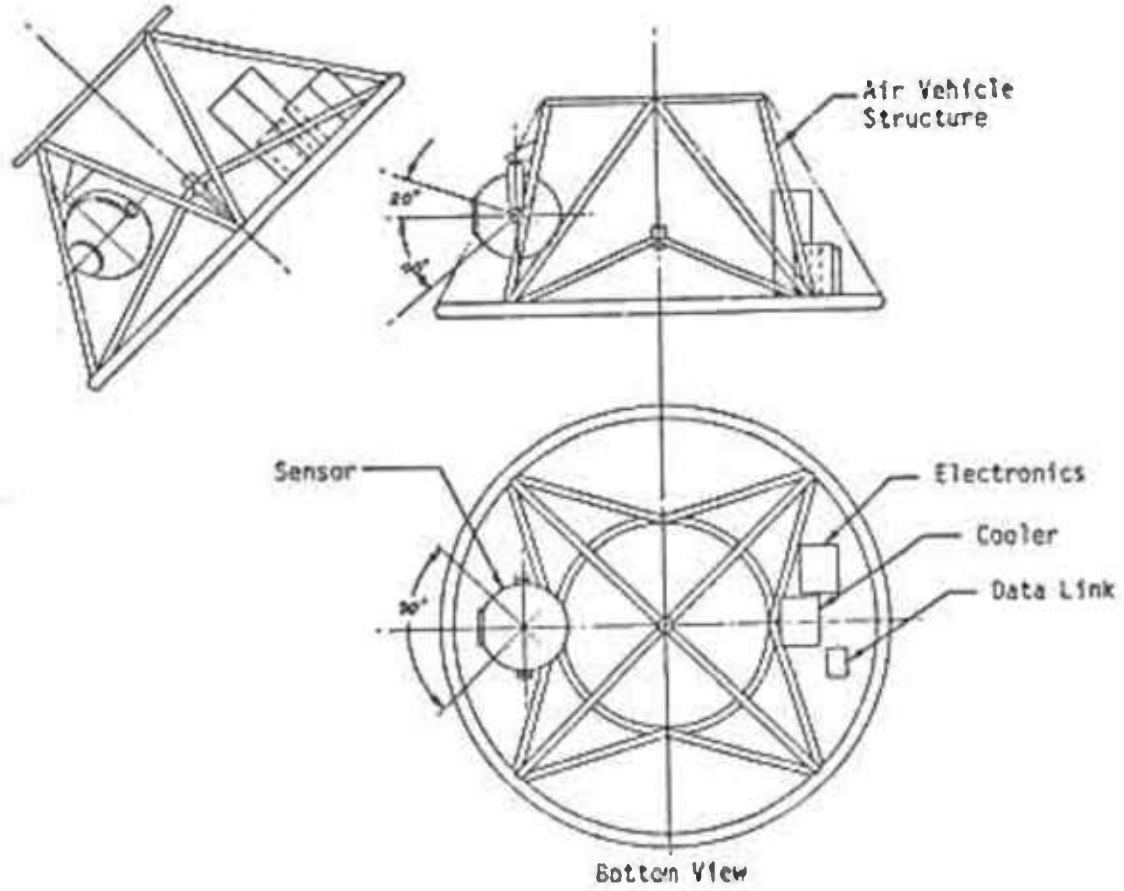

Figure 45. Typical Installation of Stabilized Imaging Sensor.

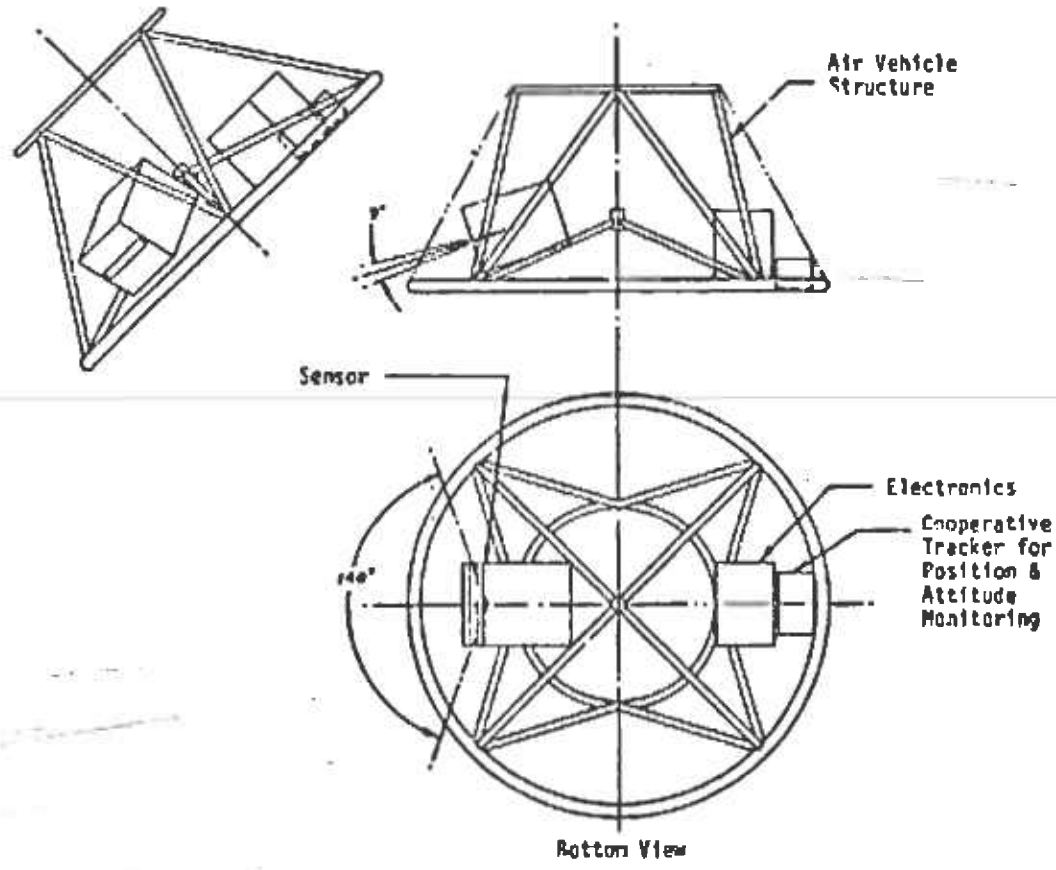

Figure 46. Typical Installation of Unstabilized Sensor.

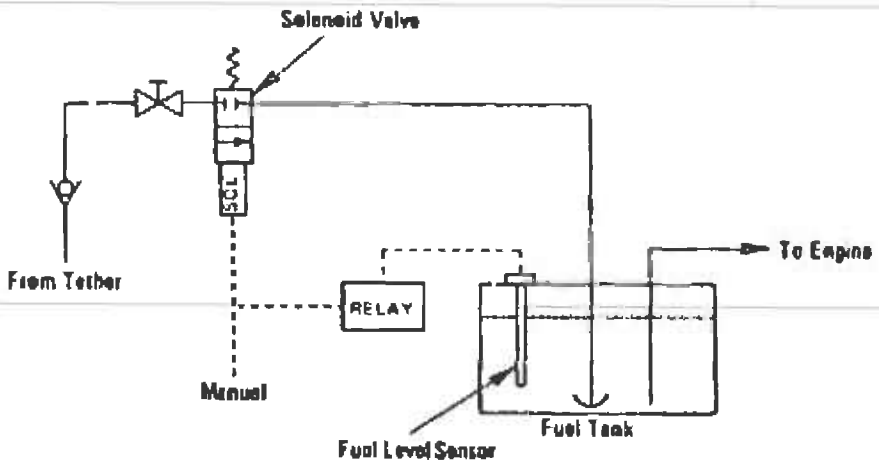

Figure 47. Air Vehicle Fuel System

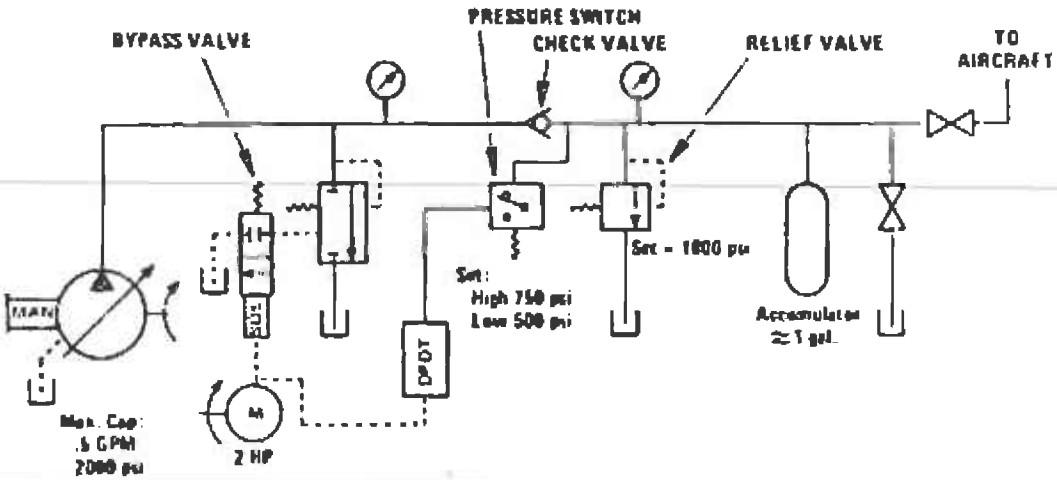

Figure 48. Ground Fuel System.

is maintained in the fuel line to the aircraft by a check valve and accumulator in the ground system. When the aircraft fuel valve opens, ground system pressure falls, the pressure switch closes the bypass valve, and fuel again flows to the aircraft.

The fuel system is self-contained and self-controlling without an air-to-ground data link. A fuel reserve is always maintained for retrieval of the air vehicle should a failure occur in the pumping system.

12.3 Flight Control System

The air vehicle is controlled with cyclic pitch of the rotors. The use of fixed collective pitch on the rotors greatly simplifies the mechanical portions of the flight control system, particularly in the swashplates. Since vertical motion is not required, the swashplates are gimbal mounted on the rotor shaft and transmit cyclic control from the electro-mechanical actuators in the stationary system to the rotating pitch links at the rotor heads.

The Automatic Flight Control System obtains its reference for pitch and roll attitude control from a vertical gyro and stabilization signals from longitudinal and lateral accelerometers and cable angle transducers. Signals from these units caused by distrubances to the air vehicle are fed to electro-mechanical servo actuactors which move the mechanical control linkages to stabilize and control the air vehicle.

A heading reference in the air vehicle compares the instantaneous compass heading with the command heading transmitted from the ground control station and errors are transmitted to the cyclic pitch controls to maintain the desired heading or turn the vehicle to a new heading. Yaw control is provided by differential action of the longitudinal cyclic pitch controls on the left and right rotors.

This Automatic Flight Control System was used successfully in Kaman's K-137 Antenna Support System and is functionally similar to that described by Schmidt in Reference 9 for Dornier's Keibitz.

12.4 Ground Support Equipment

The air vehicle requires a landing platform, a system to handle the tether cable, a fuel supply, and a means for transportation of the system. These functions can all be provided by simple equipments which for the most part exist in Army inventory.

12.4.1 Launch/Retrieve Platform

The air vehicle takes off and lands on a simple flat platform installed on the bed of a truck. The platform is 8 feet wide, 10 feet long, and has a 3-foot-diameter hole in its center for passage of the tether cable. Directly below this hole is a gimballed sheave secured to the base pallet

of the platform. Shock absorbers can be installed in the legs of the platform if high retrieval rates are utilized.

12.4.2 Tether Cable Management System

The design recommended for the cable management system is based on Kaman's experience with tethered helicopters on the K-137 Antenna Support Program. Several hundred flights were conducted without incident and the operating procedures and equipment employed were simple and straightforward. In brief, the operating procedures involved takeoff and climb with the air vehicle's lift overcoming restraining forces in a winch and retrieval with the winch overcoming the air vehicle's lift. The launch and retrieval were controlled entirely by controlling the tension in the cable near the winch. Cable reeling speed and direction were thus entirely dependent on the selected tension value and the excess lift in the air vehicle. The system, operating like a good quality spinning reel, prevents transients or disturbances from causing high cable loads on the air vehicle. When on-station altitude was reached, the winch was locked.

The recommended cable management system for the tethered platform consists of a winch, an eddy-current clutch, a winch drive motor, a level-wind mechanism, a mechanical brake, and appropriate sensors, remote controls, and displays. The winch drum exerts tension on the cable and is driven by the motor through a gear train and the eddy-current clutch. Tension in the cable is controlled by adjusting the current applied to the eddy-current clutch.

The winch drum has a diameter of 24 inches and a length of 40 inches. It stores 1000 feet of cable in 2 lays. The drive motor is a 15-hp, 220-volt, 60 H_z induction motor. It drives the input side of the clutch at constant speed and always in the direction to retrieve the vehicle. The torque transmitted to the output side of the clutch depends on the current fed to the clutch coils.

A remotely operated mechanical brake is used to lock the winch drum against cable motion once the desired length of cable is deployed. Power is then removed from the winch drive motor and the eddy current clutch. If a fixed rpm fixed collective pitch air vehicle is used as recommended in Section 12.1, the cable length deployed must be limited in accordance with air vehicle performance, air temperatures, and terrain pressure altitude.

The mechanical brake will be set automatically if a failure occurs in the cable management system during launch and retrieval.

12.4.3 Support Equipment Transport

The components of the cable management system are mounted on the base pallet of the launch platform. A general arrangement of the equipment

mounted on an M35-A2, 2½-ton cargo truck is shown in Figure 49. A 30 KVA generator, driven by a turboshaft engine provides power for the support equipment and the ground control station. Estimated weights of the truck-mounted components are:

Aerial Vehicle with Supports:	700 lb
Launch/Retrieve Platform:	250 lb
Cable Management System:	500 lb
Fuel Pumping System:	500 lb
Power Generating System:	800 lb
Total:	2750 lbs

Figure 49 shows the air vehicle secured for transport. The rotor blades are supported by poles attached to the airframe. The vehicle would be secured to the platform with a set of clamps or cables.

The overall height in the stored configuration is 12½ feet, which is within the limit for over-the-highway vehicles in the United States as tabulated by the Truck Trailer Manufacturer's Association.

12.4.4 Fuel Supply

The fuel pumping system was described in Section 12.2. The pumping system is mounted on the base pallet of the launch/retrieve platform adjacent to the winch. Fuel will be introduced into the tether cable through the winch shaft via a rotary coupling.

Fuel for the aerial vehicle and for the ground station power generator is carried in a standard Army 2½-ton M36A2 cargo truck. A sketch of the truck carrying 1200 gallons of fuel is shown in Figure 50.

12.5 On-Station Attitude and Position

The recommended control concept allows the air vehicle to drift down stream in a steady wind until the cable exerts sufficient side force to counteract the drag forces. This concept allows the airframe to be maintained in a level attitude regardless of the magnitude and direction of the wind.

The spatial position of the synchropter will be a function of rotor power, wind velocity, and wind direction, and is uniquely determined by equilibrium of forces and moments on the air vehicle.

The equilibrium conditions for the synchropter at 50 knots were determined analytically and are listed in Table XXXIV. The deployed cable is shown in Figure 51 for winds from the rear. These conditions were computed with the following data on the synchropter.

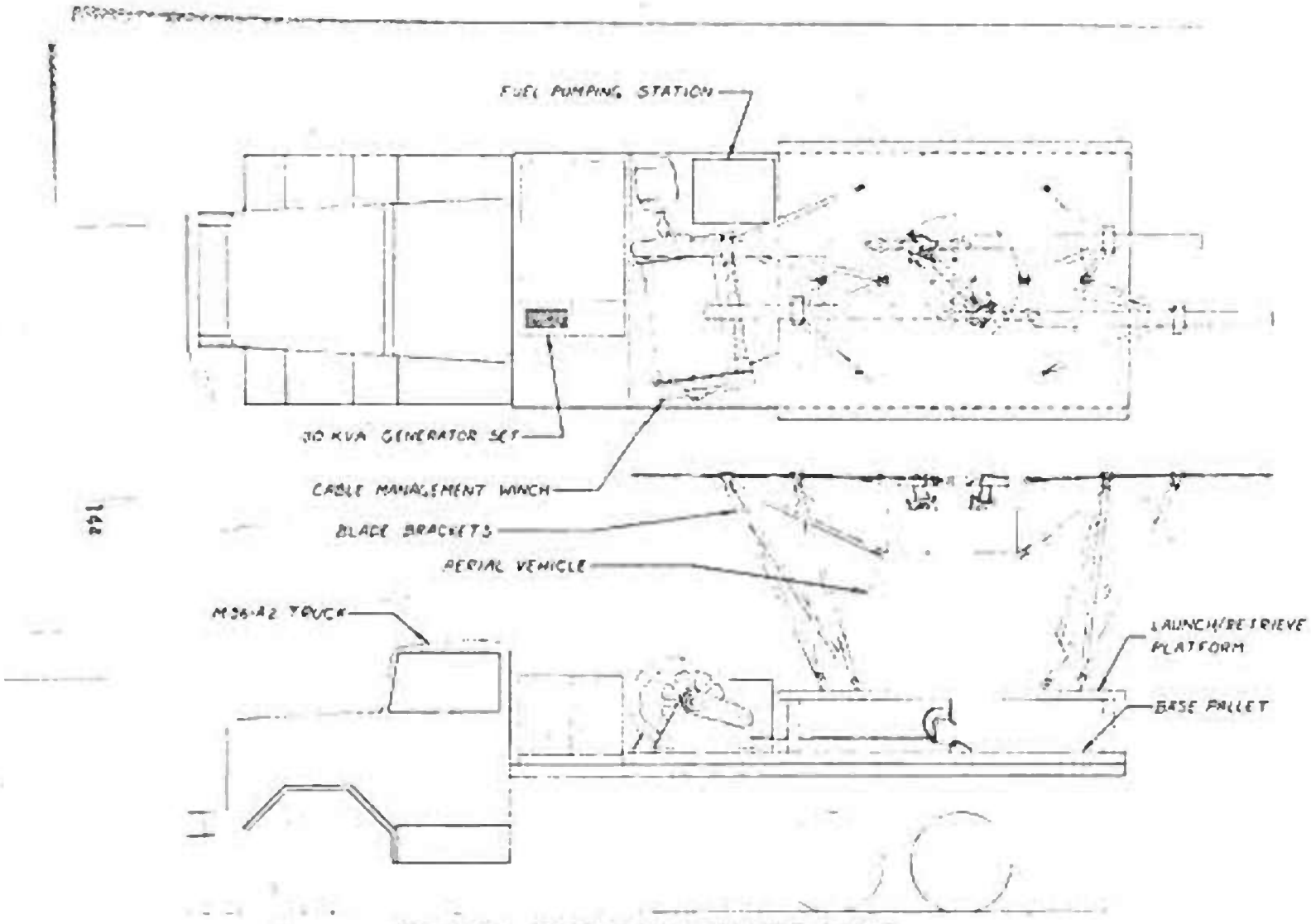

Figure 49. Mobile Tethered Platform System.

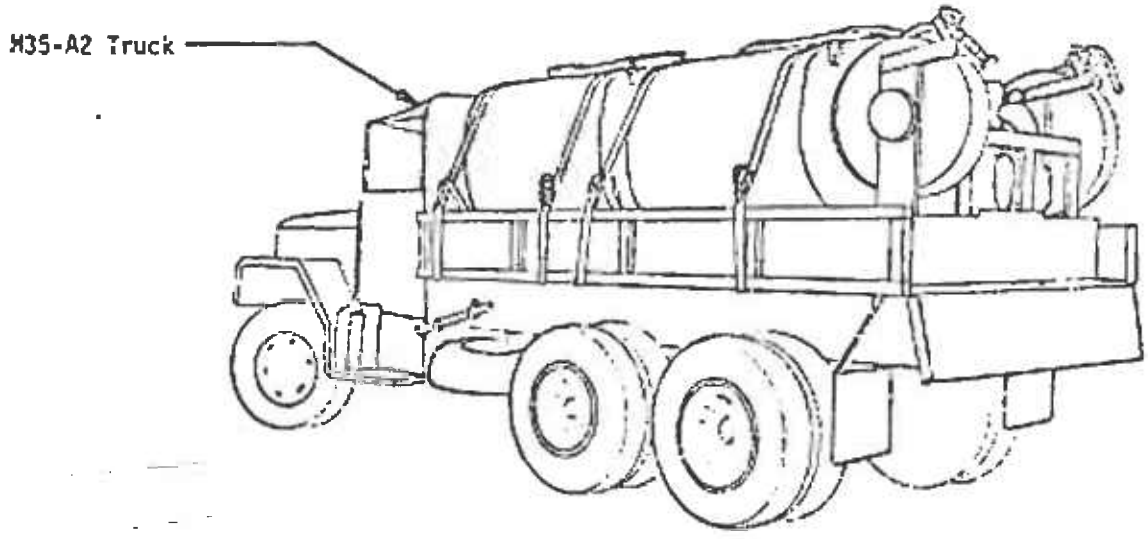

Figure 50. 1200-Gallon Fuel Supply System.

Atmospheric Conditions:	4000 ft, 95°F
Climb Power, 0-Wind:	97 hp
Rotor Diameter:	16.2 ft
Rotor Solidity:	0.0634
Tip Speed:	600 ft/sec
Air Vehicle Weight:	665 lbs
Rotor Hub to C.G.:	3.3 ft
Cable Attachment to C.G.	1.2 ft
Flat Plate Drag Area:	10.8 ft^2
Cable Length:	1050 ft
Cable Diameter:	0.5 in.
Cable Weight:	0.096 lb/ft

The collective pitch angle of the rotor was computed from the climb conditions, and the lift at 50 knots was calculated using the same collective pitch and rotor parameters. The cable tension and cable angle at the air vehicle were obtained by solving force and moment equilibrium equations, and finally, with known cable length weight and diameter, the cable disposition in space was determined from Kaman's digital computer program by matching the upper cable load and angle.

TABLE XXXIV. TRIM CONDITIONS IN 50-KNOT WINDS

Direction of Wind	Rotor Lift (lb)	Cyclic Control (deg)	Top Tension (lb)	Top Angle (deg)	Bottom Tension (lb)	Bottom Angle (deg)	Down-Wind Disp. (ft)	Height (ft)
Front	1370	7.1	710	3.0	617	58.0	309	992
Rear	1390	6.2	730	7.5	639	55.3	376	970
Side	1246	2.0	580	3.8	489	51.7	374	964

The cyclic control values shown in Table XXXIV represent the tilt of the rotor control plane or swash plate. These values represent about 40 percent of the control range that would be designed into the synchropter so that adequate margins exist for dynamic stabilization and control. With winds from the side, the tilt in the rotor shafts causes unequal rotor torques. At 50 knots, the differential torque was calculated to be approximately 10 ft-lb and would require only 0.2 degree of differential longitudinal cyclic control to balance the yawing moments.

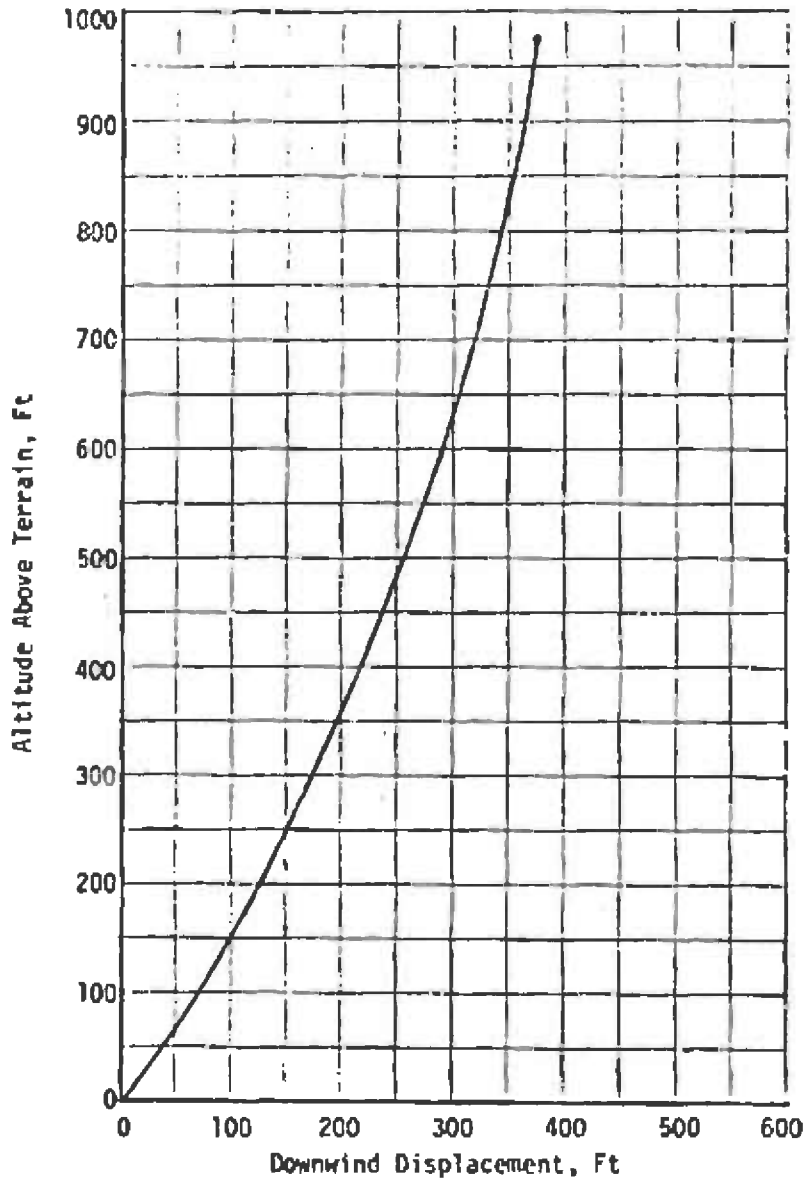

Figure 51. Cable and Platform Position in 50 Knot-Winds From the Rear.

SECTION 13

GROUND CONTROL STATION DESIGN AND OPERATING PROCEDURES

To complete the tethered platform system, a ground station is required to launch and retrieve the air vehicle, monitor on-station operation, control or monitor the operation of mission sensors, and process mission data for transmittal to other Army units in the field. This section outlines the major requirements for the control station and presents a practical design concept and operating procedure.

13.1 System Requirements

The missions considered in the design study were:

1. Forward area surveillance
2. Target tracking and laser designation
3. Location of enemy artillery and mortars
4. Indirect fire control
5. Electronic countermeasures
6. ELINT or electronic support measures
7. Communication relay
8. Control of remotely piloted vehicles

These missions require different sensors, data processors, controls and displays, etc., but the preliminary analyses indicated that major requirements could be satisfied in a common design for the ground control station. The following requirements form the basis for the control station design presented.

13.1.1 Deployment and Support

The system operates in conjunction with other ground army units. Ground station security, ground crew support, fuel and maintenance are improved as necessary. The system is capable of independent operation for several hours, but there are no provisions for defensive armament, food service, off-duty crew quarters, or major repair within the basic control station. The basic ground system is not hardened. (A limited investigation was made of an installation within armored tracked vehicles and is presented at the end of this section.)

Local maintenance of the system is restricted to simple repairs and replacement of parts. Built-in test equipment indicates status of electronic components, and sensors installed in the air vehicle provide data for remote monitoring of its operating conditions.

13.1.2 Operating Personnel

A crew of three men is capable of operating the complete system for a period of 4 hours. One man, trained in air vehicle operations, controls

launch and retrieval of the vehicle and monitors on-station behavior. One man operates and controls the mission sensors by remote means, and monitors mission data processing. The third man supervises system operations and is a standby sensor operator and air vehicle monitor for temporary relief of the other men.

13.2 Control Station Design

The control station, or operating crew enclosure, is shown in Figure 52 mounted on the bed of a 2½-ton truck. The station is 88 inches wide, 108 inches long, and 95 inches high. Its outside dimensions are compatible with the Military Airlift Command 463L Materials Handling System. Figure 53 shows a plan view of the station. The air vehicle controller's console is located at the rear of the enclosure with the operator facing the window for a clear view of the launch/retrieve platform complex. The sensor operator's station, see Figure 54, is positioned behind and to the left of the air vehicle controller's station. Ample access has been provided to the back of the equipment racks for maintenance.

The supervisor's station is in the forward right-hand corner of the enclosure where he has a view of both crew members and their controls and displays. He has a clear view of the launch/retrieve platform through the window in front of the air vehicle controller's console.

The door to the control station is located in the wall opposite to the supervisor's station. Detachable steps are hooked to the side of the enclosure for use when the control station is mounted on a truck. Cable receptacles for electric power, launch/retrieve control, and sensor data transmission and control are located at the lower outside corner of the enclosure adjacent to the relay racks of the sensor operator's station. Appropriate radio antenna and air vehicle tracking devices are mounted on the roof of the station and an air conditioner/heater is mounted high on the outside wall of the control station.

13.2.1 Air Vehicle Controls & Displays

The air vehicle operator's console will include the following controls and displays:

Controls

- Fuel pumping system on-off switch
- Air vehicle engine start-stop switch
- Winch motor on-off switch
- Eddy-current clutch rheostat
- Air vehicle heading control
- Winch brake on-off switch

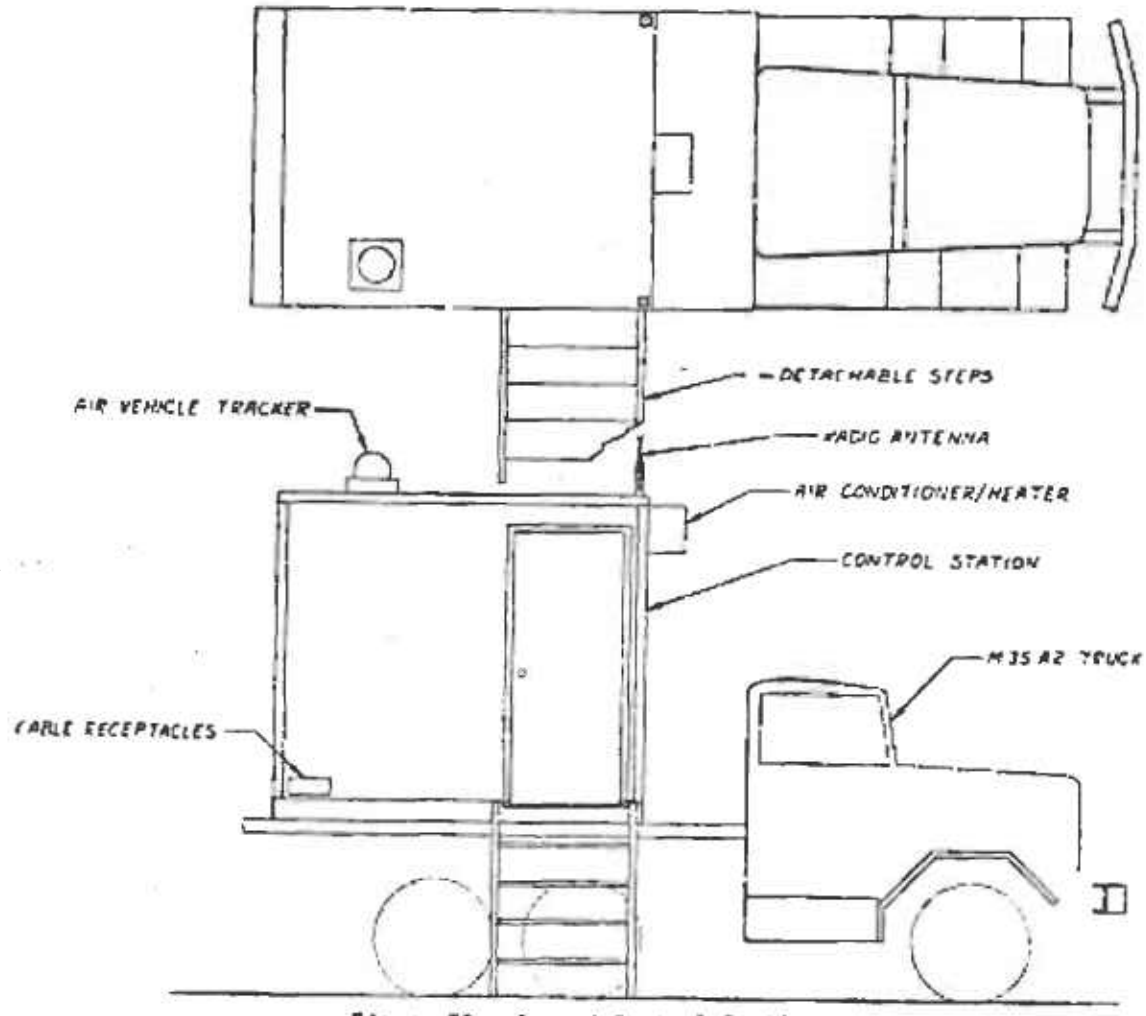

Figure 52. Ground Control Station.

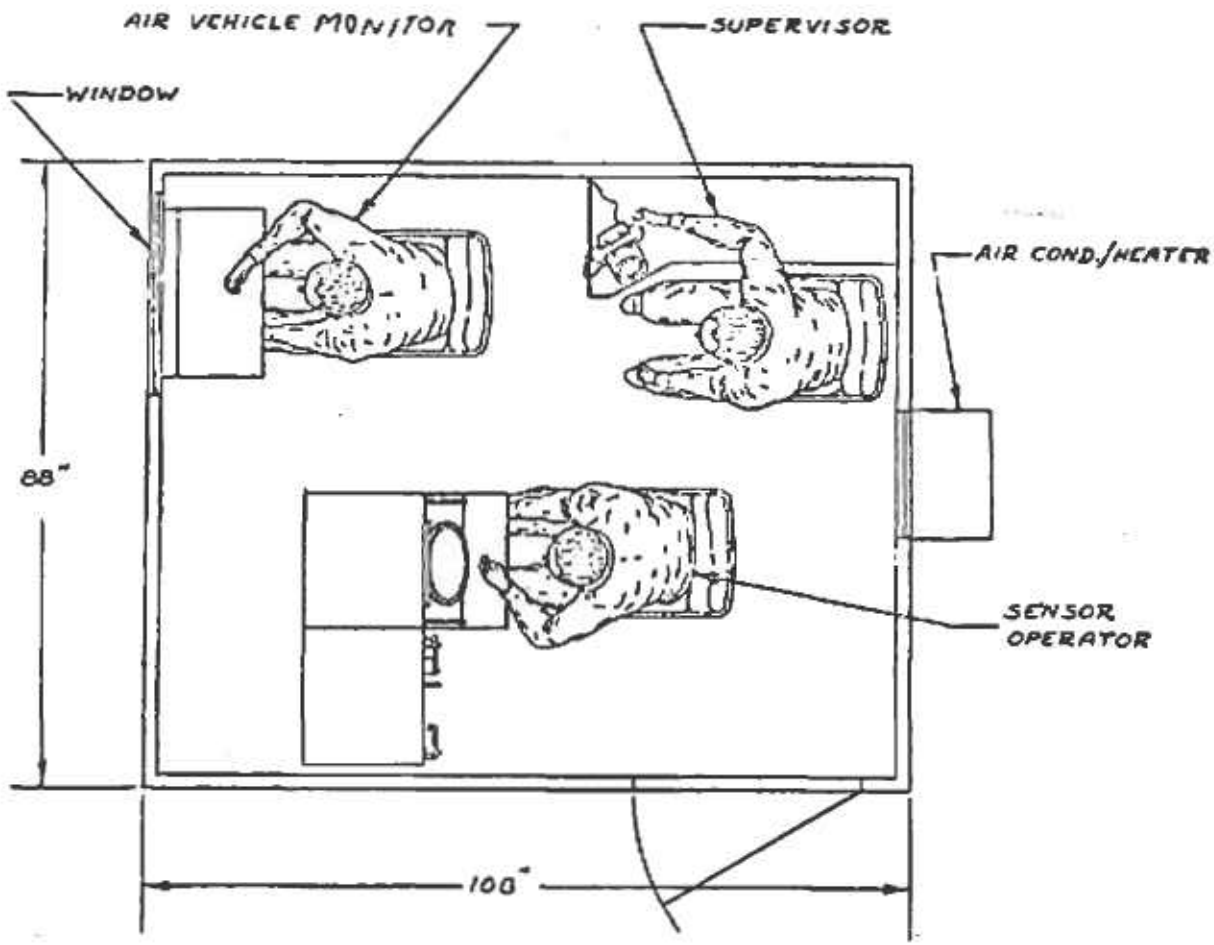

Figure 53. Plan View of Control Station.

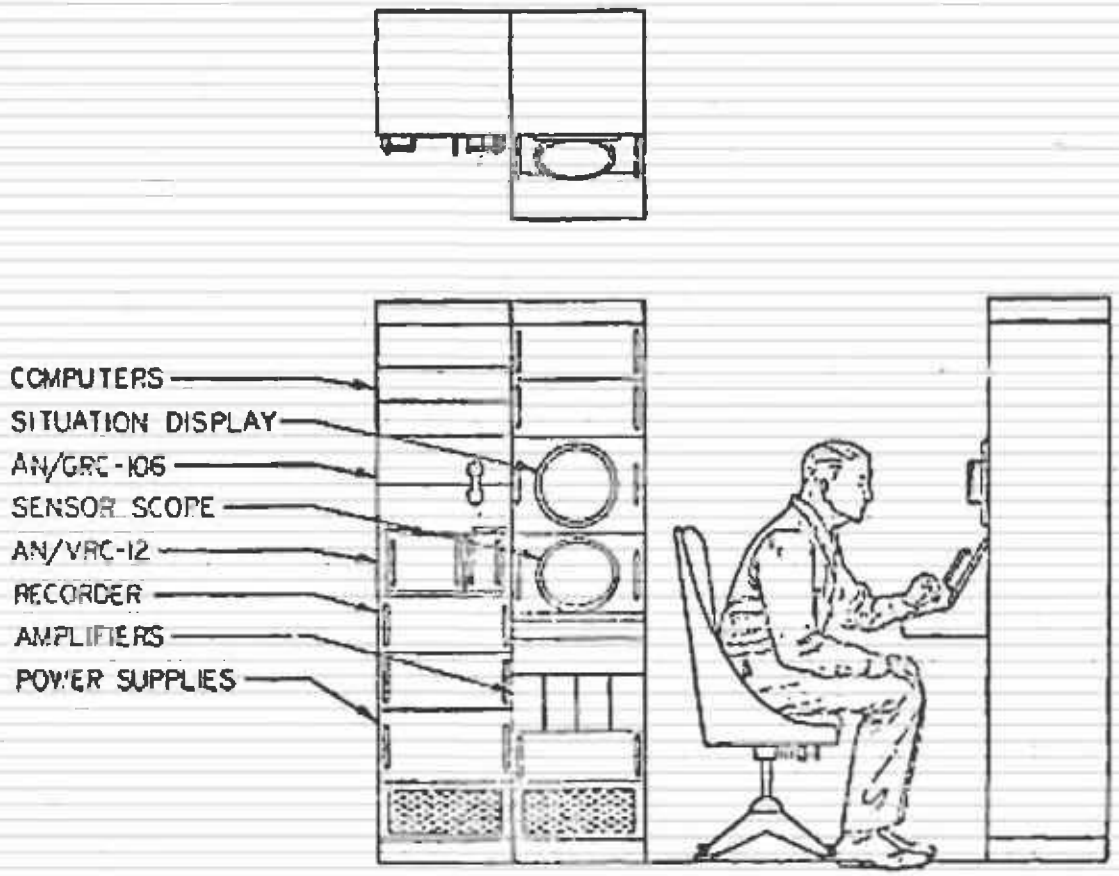

Figure 54. Mission Control Station.

Displays

- Fuel pumping system status
- Fuel pressure
- Air vehicle engine RPM
- Air vehicle EGT
- Gearbox oil temperature
- Oil quantity
- Cable tension at air vehicle
- Cable angle at air vehicle
- Cable rate
- Cable length
- Air vehicle heading
- Winch brake status

13.2.2 Mission Controls and Displays

The mission control station will vary with the sensors or payloads carried in the air vehicle. The consoles shown in Figure 54 are appropriate for target detection and location by imaging or non-imaging sensors. The basic controls required are:

- Sensor on-off
- Sensor line-of-sight
- Sensor field-of-view
- Air vehicle heading
- Target designation

The critical displays are the sensor's view of the target area, and a computer generated horizontal situation showing target location relative to the ground control station. Coordinates of the targets as determined by the computer would also be displayed on the console.

The mission control station would also contain the equipment necessary to forward the target information to other field units by voice or secure data links.

13.2.3 Communication Equipment

The communications equipment in the control station will consist of a field telephone and the following standard Army radio sets mounted in the relay racks:

1 PRC-25 FM set
1 VRC-12 FM set
1 GRC-106 AM SSB data link set

13.2.4 Power

Power for all equipment in the control station is provided by a generator mounted on the truck carrying the launch platform and cable management system.

13.3 Operational Procedures

On arrival at the deployment site, the three trucks will be parked approximately 100 feet apart with the rear, or window side, of the control station positioned so that the air vehicle launch controller has a clear view of the launch/retrieve platform through the window.

Electric cables and coaxial data link cables are run between the launch/retrieve platform and the control station, and a fuel line from the fuel truck is connected to the pumping system adjacent to the winch. The generator set is started and the rotor blades are freed of their tie-down braces which are then stowed on the base pallet under the launch platform. From here on all operations are performed from the control station.

The air vehicle operator, at his console, starts the winch motor and sets the clutch current at a high value to assure that the air vehicle cannot lift off. The fuel pumping system is turned on, and the air vehicle engine is started. After a brief period of ground running to insure all equipment is operating properly, the air vehicle operator launches the aircraft by releasing the winch brake and reducing the cable tension. As the aircraft climbs, the operator may adjust the cable tension to establish a desired rate of climb.

As the aerial vehicle approaches the required altitude, the controller slowly increases the tether cable tension to slow the rate of ascent. When the cable length indicator shows the required cable length, the winch drum is locked and the winch motor shut down. The aerial vehicle will maintain itself on station with no further action required from the controller.

To retrieve the aerial vehicle, the winch motor is started, the clutch current adjusted, and the winch brake released. The cable tension is then increased until the proper cable rewind rate is obtained. As the air vehicle comes into view of the operator, he reduces its speed of descent by adjusting the cable tension to provide a firm landing on the launch/retrieve platform. The cable tension is increased to a predetermined hold-down value and the winch brake is engaged. The operator then shuts down the air vehicle engine, the fuel pumping station and the winch motor. If a new location is desired, the rotor blade supports are installed and the cables between the vehicles are disconnected and stored for transport.

A general view of the system in operation is depicted in Figure 55.

13.4 Hardened Systems

The selected synchropter air vehicle and its cable management system can be carried in and deployed from the basic vehicle used for the M577 Command Post. The rear and the top of the vehicle would have to be modified for the winch and rotor shafts, and the rotor blades would have to be removed for full protection in transport. Figure 56 shows the general arrangement within the M577. The fuel pumping system, ground power system, and fuel for 20 hours of operation could easily be carried in an M548 Cargo Carrier. The ground control equipment could be installed in an M577 Command Post.

The aerial platform can also be hardened against small arms fire or small shell fragments at some expense in weight, power and size. Table XXXV shows the weight increase for various degrees of protection. The armored areas are shown in Figure 57. The basic weights are for aluminum skin. Protection from 7.62 mm projectiles was based on dual hardness armor plate at 7.6 lb/ft^2 and protection from 14.5 mm projectiles was based on armor plate at 24 lb/ft^2. The component weights shown in Table XXXV are for armor plate only and do not include any allowance for growth in air vehicle size.

The impact of armor plate additions on the aerial platform can be assessed from data generated under Task 2. Table XXXI shows a growth in vehicle weight of 176 pounds and a growth in power of 20 hp for a payload increase of 100 pounds.

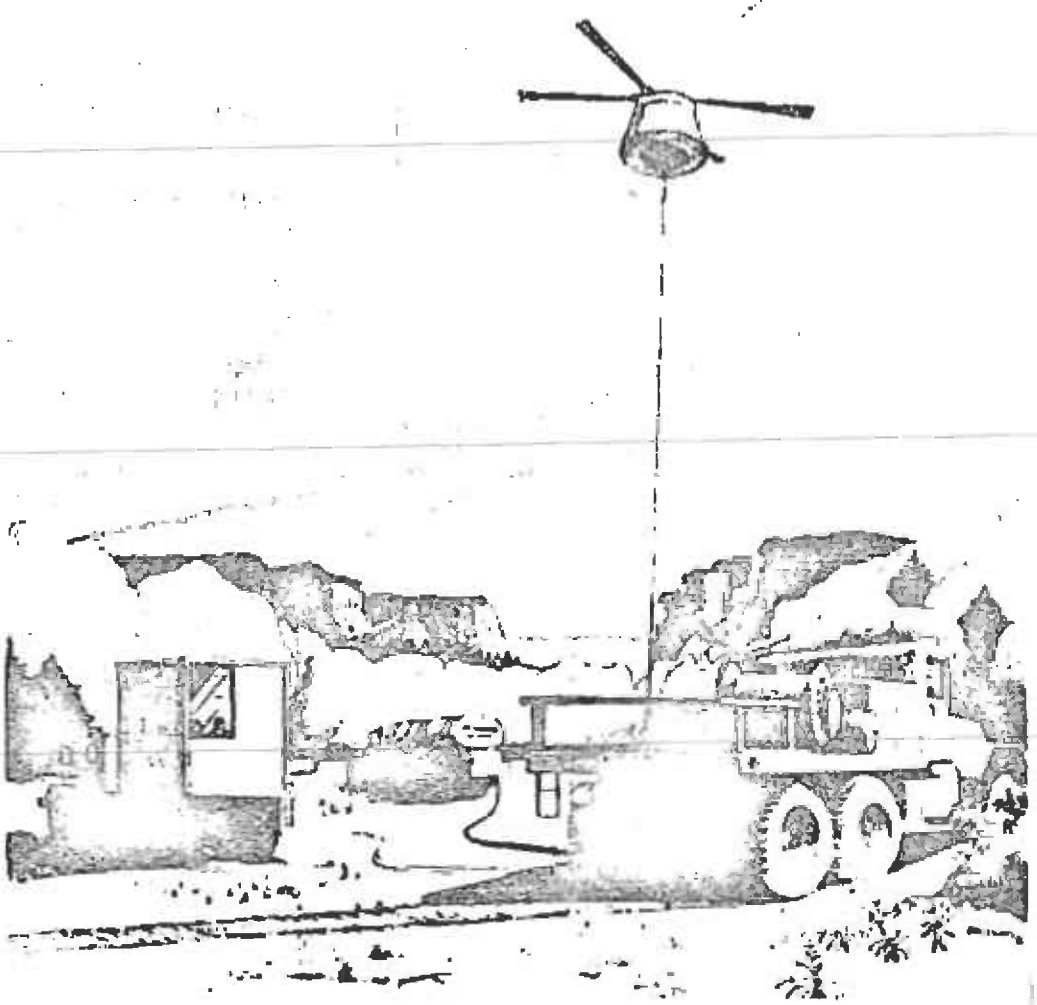

Figure 55. Unmanned, Tethered, Rotary-Wing Platform in Operation.

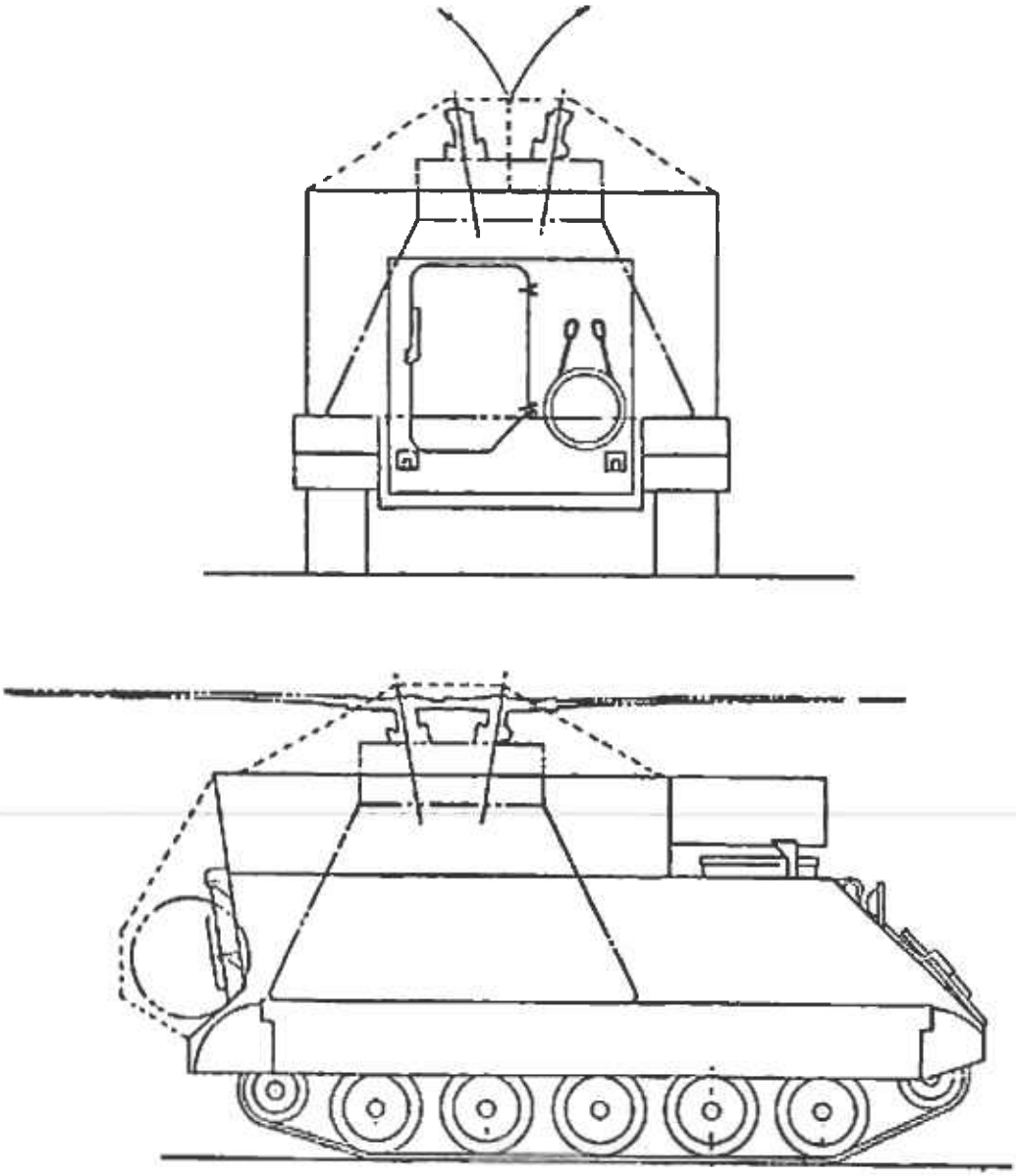

Figure 56. Air Vehicle and Winch Installed in M577 Command Post Carrier.

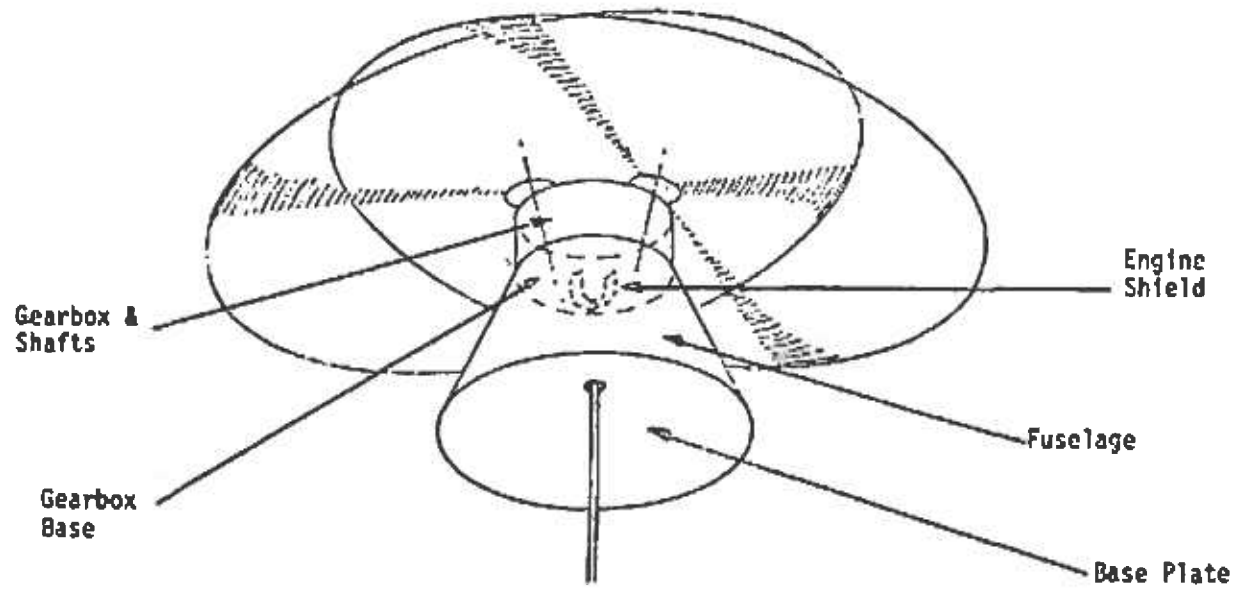

Figure 57. Armor Protection Options for Air Vehicle.

TABLE XXXV. WEIGHT OF AIR VEHICLE ARMOR PLATE

Protected Area	Basic Weight (lb)	7.62 MM Protection	14.5 MM Protection
A. Base Plate	16.96	357.9	1,130.4
B. Fuselage	29.54	593.2	1,873.2
C. Gear Box & Shafts	5.51	116.4	367.7
D. Gear Box Base	3.97	83.9	264.9
E. Engine Shield	-	32.7	103.2

SECTION 14

CONCLUSIONS

The work done during this study together with the work done on past programs leads to the conclusion that an unmanned, tethered, rotary-wing platform is feasible. Several alternatives exist for implementing a long endurance tethered elevated platform.

The most attractive concepts are:

(1) Turboshaft driven synchropter with fuel pumped from the ground.

(2) Electric motor-driven synchropter with electric power generated on the ground.

(3) A rotor driven by tip nozzles with air provided by an airborne compressor driven by a turboshaft engine utilizing fuel pumped from the ground.

Each of these concepts can meet the specified design and performance requirements, can be implemented with existing components or designs that are within the present state of the art, and will yield a system that can be deployed and operated in the field without highly skilled personnel or complex special support equipment.

The turboshaft powered synchropter is the best overall approach. A long-life, low-cost, low-maintenance platform can be readily produced with existing technologies and can be powered with available turboshaft engines. The synchropter will be small and have a low weight, and its low fuel consumption will make the system readily transportable and supportable in the forward areas. The synchropter, with cyclic pitch controls, will provide a stable platform for mission sensors and can be operated, without attention from the ground, by a simple automatic flight control system.

REFERENCES

1. Petrides, Tracy, ADVANCED DEVELOPMENT MODEL OF A TETHERED AERIAL PLATFORM SYSTEM, Tracy Teknocraft Corporation, ECOM-0270-F, U.S. Army Electronics Command, Fort Monmouth, N.J., Sept. 1970.

2. Rabenhorst, D.W., THE ELEVATED STABILIZED PLATFORM, Applied Physics Laboratory, The Johns Hopkins University, TG-1067, March 1969.

3. PERIODICALLY ELEVATED RADAR STUDY, Convair Division, General Dynamics Corporation, ECOM-02274-F, U. S. Army Electronics Command, Fort Monmouth N.J., December 1966, AD378557

4. A SIMPLIFIED METHOD FOR FORECASTING ROTARY-WING AIRCRAFT TRENDS, Sikorsky Division, United Aircraft Corporation, R-50466, U. S. Army Ballistics Research Laboratory, Aberdeen, Md., June 6, 1967.

5. FLYING CRANE PARAMETRIC DESIGN STUDY, Bell Aircraft Corporation, March 1957.

6. FLYING CRANE STUDY, R-93, Vertol Division, The Boeing Company, Jan. 15, 1956.

7. Paterson, Lt. Col. P.J., ENGINEERING STUDY OF THE PERISCOPTER, A DESIGN PROPOSAL, Canadian Armament Research and Development Establishment, Valcartier, Quebec, CARDE T.R 439/63, May 1963, AD407438.

8. Mort, K. W., and Gamse, B., A WIND-TUNNEL INVESTIGATION OF A 7-FOOT-DIAMETER DUCTED PROPELLER, Ames Research Center, National Aeronautics and Space Administration, Moffett Field, Calif., NASA TM D-4142, Aug. 1967.

9. Schmidt, G., and Swik, R., THEORETICAL AND PRACTICAL ASPECTS OF AN AUTOMATIC HOVER CONTROL SYSTEM FOR AN UNMANNED TETHERED ROTOR PLATFORM, Proceedings of the IFAC 5th World Congress, Paris, France, June 1972.

MIL-STD-1374 PART I

Page _____
Date _____

Page _____
Model _____
Report _____

GROUP WEIGHT STATEMENT

AIRCRAFT

(INCLUDING ROTORCRAFT)

ESTIMATED · ~~CALCULATED~~ · ~~ACTUAL~~

(Cross Out Those Not Applicable)

CONTRACT NO. DAAJ02-74-C-0008

AIRCRAFT, GOVERNMENT NO. _____

AIRCRAFT, CONTRACTOR NO. _____

MANUFACTURED BY KAMAN AEROSPACE CORPORATION

		MAIN	AUX
ENGINE	MANUFACTURED BY		
	MODEL		
	NO		
	TYPE		

PAGES REMOVED	PAGE NO
	6

MIL-STD-1374 PART I

GROUP WEIGHT STATEMENT
WEIGHT EMPTY

Name _____ Page _____

Date _____ Model _____

1	WING GROUP		N.A.
2	BASIC STRUCTURE - CENTER SECTION		
3	- INTERMEDIATE PANEL		
4	- OUTER PANEL		
5	- GLOVE		
6	SECONDARY STRUCTURE (Incl. Wing Fold Weight (lbs))		
7	AILERONS (Incl. Balance Weight (lbs))		
8	FLAPS - TRAILING EDGE		
9	- LEADING EDGE		
10	SPOILERS		
11			
12			
13			
14	ROTOR GROUP		73.76
15	BLADE ASSEMBLY	43.36	
16	HUB & HINGE (Incl. Blade Fold Weight (lbs))	27.40	
17			
18			
19	TAIL GROUP		N.A.
20	BASIC & SECONDARY STRUCT. - STABILIZER		
21	- FIN (Incl. Dorsal)		
22	VENTRAL		
23	ELEVATOR (Incl. Balance Weight (lbs))		
24	RUDDERS (Incl. Balance Weight (lbs))		
	TAIL ROTOR - BLADES		
26	- HUB & HINGE		
27			
28	BODY GROUP		151.63
29	BASIC STRUCTURE - FUSELAGE or HULL	37.65	
30	- BOOMS		
31	SECONDARY STRUCTURE - FUSELAGE or HULL	63.99	
32	- BOOMS		
33	- SPEEDBRAKES		
34	- DOORS, RAMPS, PANELS, & MISC		
35			
36			
37	ALIGHTING GEAR GROUP (Type)		N.A.
38	LOCATION / Retracting Gear* / Arrestor Gear* / Structure / Controls		
39			
40			
41			
42			
43			
44			
45	ENGINE SECTION or NACELLE GROUP		N.A.
46	BODY - INTERNAL		
47	- EXTERNAL		
48	WING - INBOARD		
49	- OUTBOARD		
50			
51			
52	AIR INDUCTION SYSTEM		
53	DOORS, PANELS, & MISC		
54			
55			
56			
57	TOTAL STRUCTURE (To be Brought Forward)		175.39

*Change to Floats & Skids for Water Type Gear

MIL-STD-1374 PART I

GROUP WEIGHT STATEMENT
WEIGHT EMPTY

Name _____ Page _____
Date _____ Model _____
Engine _____

		Auxiliary	Main		
1	PROPULSION GROUP				195.00
2	ENGINE INSTALLATION			129.00	
3					
4	ACCESSORY GEAR BOXES & DRIVE				
5					
6	EXHAUST SYSTEM				
7	ENGINE COOLING				
8	WATER INJECTION				
9	ENGINE CONTROL				
10	STARTING SYSTEM				
11	PROPELLER INSTALLATION				
12	SMOKE ABATEMENT				
13	LUBRICATING SYSTEM				
14	FUEL SYSTEM			7.50	
15	TANKS, PROTECTED				
16	UNPROTECTED		1.0		
17	PLUMBING, etc		6		
18	DRIVE SYSTEM			64.50	
19	GEAR BOXES, SUB SY & ROTOR BOX				
20	TRANSMISSION DRIVE				
21	ROTOR SHAFTS				
22	JET DRIVE				
23					
24	FLIGHT CONTROLS GROUP				16.25
25	COCKPIT CONTROLS (Autopilot (lbs.)				
26	SYSTEMS CONTROLS			16.25	
27					
28					
29	AUXILIARY POWER PLANT GROUP				N.A.
30	INSTRUMENTS GROUP				N.A.
31	HYDRAULIC & PNEUMATIC GROUP				N.A.
32					
33	ELECTRICAL GROUP				28.50
34					
35	AVIONICS GROUP				45.00
36	EQUIPMENT			43.00	
37	INSTALLATION			2.00	
38					
39	ARMAMENT GROUP (Incl. Pylons Prot (lbs.)				N.A.
40	FURNISHINGS & EQUIPMENT GROUP				10.00
41	ACCOMMODATION FOR PERSONNEL				
42	MISCELLANEOUS EQUIPMENT			10.00	
43	FURNISHINGS				
44	EMERGENCY EQUIPMENT				
45					
46	AIR CONDITIONING GROUP				N.A.
47	ANTI-ICING GROUP				N.A.
48					
49	PHOTOGRAPHIC GROUP				N.A.
50					
51	LOAD & HANDLING GROUP				N.A.
52	AIRCRAFT HANDLING				
53	FOLD HANDLING				
54					
55	MANUFACTURING VARIATION				--
56	TOTAL FROM PAGE 2				175.39
57	WEIGHT EMPTY				470.15

MIL-STD-1374 PART I

GROUP WEIGHT STATEMENT
USEFUL LOAD AND GROSS WEIGHT

Name _____ Date _____

Page _____ Model _____ Report _____

1	LOAD CONDITION								
2									
3	CREW (No.)					N.A.			
4	PASSENGERS (No.)					N.A.			
5	FUEL	Location	Type	Gals.					
6	UNUSABLE								
7	INTERNAL					32.5			
8									
9									
10									
11	EXTERNAL								
12									
13									
14	OIL								
15	TRAPPED								
16	ENGINE								
17									
18	FUEL TANKS Location ( )								
19	WATER INJECTION FLUID (Gals.)								
20									
21	BAGGAGE								
22	CARGO								
23									
24	GUN INSTALLATIONS								
25	GUNS	Location	Fix. or Flex.	Quantity	Caliber				
26									
27									
28	AMMO								
29									
30									
31	SUPPLIES								
32	WEAPONS INSTALL. INC. Submerine Detection Expendables								
33									
34									
35									
36									
37									
38									
39									
40									
41									
42									
43									
44									
45									
46	EQUIPMENT					200.00			
47									
48	SURVIVAL KITS & LIFE RAFTS								
49									
50	OXYGEN								
51									
52									
53									
54									
55	TOTAL USEFUL LOAD					232.5			
56	WEIGHT EMPTY					470.15			
57	GROSS WEIGHT					702.65			

*If expendable and listed as useful load
**Fuel, items, weights, locations, etc. referred to Basic Location, Charts, or the Part of Weight Empty for distribution, location and Quantity for all items (items including installation)

MIL-STD-1374 PART I

GROUP WEIGHT STATEMENT
DIMENSIONAL AND STRUCTURAL DATA

Page _____
Model _____
Report _____

Name _____
Date _____

1	WING, ROTOR & TAIL GROUPS						
2	WING N.A.						
3							
4	MAIN ROTOR Blades/Rotor 2 1	2.1		4.86	.58	4.86	.58
5	TAIL ROTOR Blades/Rotor N.A.						
6	HORIZ TAIL N.A.						
7	VERT TAIL N.A.						
8							
9	AREAS - (Sq Ft)	Wing			Horiz Tail	Vert. Tail	Dorsal
10	(Thos. for Wing & Rotor, All Others Exposed)				-	-	-
11		Speed Brks.	Flaps (L.E.)	Flaps (T.E.)	Slats	Spoilers	Ailerons
12	AREAS - (Sq Ft)						
13	BODY & NACELLE GROUPS	Length (Ft)	Depth (Ft)	Width (Ft)		Vol. (Cu. Ft)	
14	FUSELAGE or HULL	7.56	3.8	7.56			
15	BOOMS						
16	NACELLES						
17							
18							
19	ALIGHTING GEAR GROUP	Length - Oleo Ext		Oleo Travel		Length - Arrest Hook	
20		Axle to ℄ Tire		Ext. to Collapsed		Hook Trunnion to Pt.	
21	LOCATION						
22	DIMENSIONS (Inches)						
23							
24	PROPULSION GROUP						
25	ENGINES						
26	MAIN					100	6000
27	AUXILIARY						
28	ROTOR DRIVE SYSTEM	Design HP	Input R.P.M.				
29		100	6000	700			
30		Protected		Unprotected		Integral	
31	FUEL - INTERNAL *** LOCATION	No. Tanks	Gallons	No. Tanks	Gallons	No. Tanks	Gallons
32	WING						
33	FUSELAGE			1	5		
34	- EXTERNAL ***						
35							
36	OIL						
37	ELECTRICAL & LOAD & HANDLING GROUPS						
38		1		5 KW 400~			
39							
40	STRUCTURAL DATA - CONDITION						Lb/Sq. Ft.
41	FLIGHT - MANEUVER					Tethered	
42	- GUST						
43	LANDING						
44							
45	MAX. GROSS WITH ZERO WING FUEL						
46	CATAPULTING						
47	LIMIT LANDING SINK SPEED (Ft./Sec.)						
48							
49	STALL SPD. - LDG. CONFIG. - POWER OFF						
50							
51	ROTOR TIP SPD AT DESIGN LIMIT	R.P.M.	Power	Ft./Sec.			
52		700	86	600			
53	% DESIGN LOAD	Wing		Rotor		Rotor	
54	DESIGN SPEED AT S.L. (Knots)	Level		Dive			
55	DESIGN SPD. AT [illegible] ALTITUDES		Alt.		Alt.		
56							
57	GOPE WEIGHT (Airframe)						

*Blows to all tip of fuselage including equipment protuberances
**Referred to ℄ of ℄ Aircraft for Wing & Tail, Insert center from ℄ Rotor for Rotors.
***Total Usable Capacity
****Insert inches from ℄ Rotor to Blade Attachment for Rotors.

GROUP WEIGHT STATEMENT

Page _____
Date _____
Item _____

Page _____
Date _____
Item _____

AIRFRAME WEIGHT

The Airframe Weight to be entered on line 57 of page 5 of the Group Weight Statement should be derived here in detail showing those items deducted from weight empty as required by the document "Cost Information Reports (CIR) for Aircraft, Missiles, and Space Systems" dated 21 April, 1966, or subsequent revisions thereto. Airframe weight is the same as previously called AMPR and DCPR and is not to be confused with "Work Breakdown Structure (WBS) Airframe Cost Definition."

WEIGHT EMPTY	470.15
DEDUCT THE FOLLOWING ITEMS (ITEMIZE)	
Engine & Starter	129.00
Alternator & Regulator	28.50
AIRFRAME WEIGHT	312.65

LIST OF SYMBOLS

A_B	total blade area, ft^2
α_F	fuselage angle of attack
α_R	rotor angle of attack
b	number of blades
b_H	height of hub above cg, ft
BL	blade loading, lb/ft^2
Cc	climb power factor
δ	pressure ratio
DL	disc loading, lb/ft^2
D_F	fuselage drag force, lb
η_n	nozzle efficiency
η_m	mechanical efficiency
η_p	propulsive efficiency
f	equivalent fuselage drag area, ft^2
Δh	isentropic enthalpy drop in nozzle
HP_{ACC}	horsepower required by accessories
H	rotor side force, lb
k	rotor stiffness factor
K	configuration power loss factor
K_B	fuselage blockage factor
L	rotor lift, lb
Mc	moment due to cable load, ft-lb
M_{HUB}	rotor hub moment, ft-lb

MRHP	main rotor horsepower
P	total power required on station
ϕ_1	angle of tether cable at the ground
ϕ_2	angle of tether cable at the air vehicle
Q	rotor shaft torque, ft-lb
R	rated power of engine, hp
R/C	rate of climb, ft/min
SHP	shaft horsepower
σ	solidity
σ_o	reference solidity
sfc	specific fuel consumption, lb/hr/hp
τ	density ratio
T	rotor thrust, lb
T_{CH}	horizontal component of cable tension at air vehicle, lb
T_1	cable tension at the ground, lb
T_2	cable tension at the air vehicle, lb
θ	temperature ratio
θ	pitch attitude
W	gross weight of air vehicle, lb
ΩR	tip speed of rotor, ft/sec

END
DATE
FILMED
11-74
NTIS

UNCLASSIFIED

DO NOT RETURN THIS DOCUMENT

UNCLASSIFIED