AD-782 756

ROTORCRAFT FLIGHT SIMULATION WITH AEROELASTIC ROTOR AND IMPROVED AERODYNAMIC REPRESENTATION. VOLUME II. USER'S MANUAL

John M. Davis

Bell Helicopter Company

Prepared for:

Army Air Mobility Research and Development Laboratory

June 1974

DISTRIBUTED BY:

NTIS

National Technical Information Service
U. S. DEPARTMENT OF COMMERCE
5285 Port Royal Road, Springfield Va. 22151

Unclassified

SECURITY CLASSIFICATION OF THIS PAGE (When Data Entered)

REPORT DOCUMENTATION PAGE

READ INSTRUCTIONS BEFORE COMPLETING FORM

1. REPORT NUMBER: USAAMRDL-TR-74-10B

2. GOVT ACCESSION NO.:

3. RECIPIENT'S CATALOG NUMBER: AD-782 756

4. TITLE (and Subtitle): ROTORCRAFT FLIGHT SIMULATION WITH AEROELASTIC ROTOR AND IMPROVED AERODYNAMIC REPRESENTATIONS, Volume II, User's Manual

5. TYPE OF REPORT & PERIOD COVERED: Final Technical Report

6. PERFORMING ORG. REPORT NUMBER: BHC Rpt. 299-099-814

7. AUTHOR(s): John M. Davis

8. CONTRACT OR GRANT NUMBER(s): DAAJ02-72-C-0098

9. PERFORMING ORGANIZATION NAME AND ADDRESS:
Bell Helicopter Company
P. O. Box 482
Fort Worth, Texas 76101

10. PROGRAM ELEMENT, PROJECT, TASK AREA & WORK UNIT NUMBERS:

11. CONTROLLING OFFICE NAME AND ADDRESS:
Eustis Directorate
U.S. Army Air Mobility Research and Development Laboratory, Fort Eustis, Virginia 23604

12. REPORT DATE: June 1974

13. NUMBER OF PAGES: 375

14. MONITORING AGENCY NAME & ADDRESS (if different from Controlling Office):

15. SECURITY CLASS. (of this report): Unclassified

15a. DECLASSIFICATION/DOWNGRADING SCHEDULE:

16. DISTRIBUTION STATEMENT (of this Report):

Approved for public release; distribution unlimited.

17. DISTRIBUTION STATEMENT (of the abstract entered in Block 20, if different from Report):

18. SUPPLEMENTARY NOTES:

19. KEY WORDS (Continue on reverse side if necessary and identify by block number):

Aerodynamics	Flight Simulation	Dynamics
Aeroelasticity	Helicopters	Structural Properties
Rotors	Control	
Computer Programs	Numerical Analysis	
Digital Computers	Rotary Wing Aircraft	

20. ABSTRACT (Continue on reverse side if necessary and identify by block number):

This report consists of three volumes and documents the current version in the C81 family of rotorcraft flight simulation programs developed by Bell Helicopter Company. This current version of the digital computer program is referred to as AGAJ73.

Reproduced by
NATIONAL TECHNICAL INFORMATION SERVICE
U S Department of Commerce
Springfield VA 22151

DD FORM 1 JAN 73 1473 EDITION OF 1 NOV 65 IS OBSOLETE

Unclassified

SECURITY CLASSIFICATION OF THIS PAGE (When Data Entered)

Block 20. Continued

The new, revised, or alternate mathematical models incorporated into the program during the current contract are listed below:

(1) Fuselage aerodynamic forces and moments (revised)

(2) Aerodynamic surfaces (revised with two surfaces added)

(3) External stores/aerodynamic brakes (new)

(4) Rotor blade airfoil section distribution (new)

(5) Rotor-induced velocity distribution (alternate)

(6) Rotor unsteady aerodynamics (alternate)

(7) Rotor wake effect at aerodynamic surfaces (alternate)

(8) Method for numerically integrating rotorcraft equations of motion (alternate)

This volume, The User's Manual, presents the detailed information necessary to use the computer program. Section 1 is a brief introduction. The specific input quantities and format are listed in Section 2 and discussed in Section 3. Section 4 describes the program's output format and Section 5 discusses program error messages. A set of sample data is included for reference purposes.

Volume I, The Engineer's Manual, documents the background and development of the current version of the program. Volume III, the Programmer's Manual, includes cross-references of FORTRAN COMMON BLOCK variables, a catalog of subroutines, and a discussion of programming considerations. The listings and related software for the computer programs documented in this report are unpublished data which are on file at the Eustis Directorate, U. S. Army Air Mobility Research and Development Laboratory (USAAMRDL), Fort Eustis, Virginia.

EUSTIS DIRECTORATE POSITION STATEMENT

This report has been reviewed by the Eustis Directorate, U. S. Army Air Mobility Research and Development Laboratory and is considered to be technically sound.

The computer program resulting from this contract will be provided, upon request of qualified users, for use in the design and analysis of rotary-wing aircraft. Volume III of this report, a programmer's manual, has not been widely distributed, but will be provided with the computer program to aid in program installation.

The technical monitor for this contract was Mr. Edward E. Austin, Aeromechanics Technology Applications Division.

ACCESSION for
NTIS White Section ☑
DDC Buff Section ☐
UNANNOUNCED ☐
JUSTIFICATION .....
BY .....
DISTRIBUTION/AVAILABILITY CODES
Dist. AVAIL. and/or SPECIAL
A

DISCLAIMERS

The findings in this report are not to be construed as an official Department of the Army position unless so designated by other authorized documents.

When Government drawings, specifications, or other data are used for any purpose other than in connection with a definitely related Government procurement operation, the United States Government thereby incurs no responsibility nor any obligation whatsoever; and the fact that the Government may have formulated, furnished, or in any way supplied the said drawings, specifications, or other data is not to be regarded by implication or otherwise as in any manner licensing the holder or any other person or corporation, or conveying any rights or permission, to manufacture, use, or sell any patented invention that may in any way be related thereto.

Trade names cited in this report do not constitute an official endorsement or approval of the use of such commercial hardware or software.

DISPOSITION INSTRUCTIONS

Destroy this report when no longer needed. Do not return it to the originator.

PREFACE

This report and its accompanying computer program were developed under Contract DAAJ02-72-C-0098 awarded in June 1972 by the Eustis Directorate of the U. S. Army Air Mobility Research and Development Laboratory (USAAMRDL). In addition to the work performed under this contract, the report and computer program include the documentation and program features developed under USAAMRDL Contracts DAAJ02-70-C-0063 and DAAJ02-73-C-0086. The contractor and USAAMRDL have agreed that the computer program documented herein is the new master version of the program. Hence, this report supersedes all previous versions of the C81 program and documentation.

Technical program direction was provided by Mr. E. E. Austin of USAAMRDL. Principal Bell Helicopter personnel associated with the current contract were Messrs. B. L. Blankenship, J. M. Davis, and P. Y. Hsieh, and Dr. B. T. Waak. In addition, Dr. R. L. Bennett and Mr. B. J. Bird assisted in coordinating the work and documentation prepared under the two previous contracts noted above with that prepared under this contract.

TABLE OF CONTENTS

		Page
PREFACE		iii
LIST OF ILLUSTRATIONS		viii
LIST OF TABLES		xi
1.	INTRODUCTION	1-1
1.1	Primary and Secondary Operations of the Program	1-3
1.2	Discussion of the Program Operations.	1-17
1.3	Programming and Documentation Considerations	1-19
2.	INPUT FORMAT	2-1
2.1	General	2-1
2.2	Identification and Program Logic Group	2-8
2.3	Data Table Group	2-10
2.4	Fuselage Group	2-25
2.5	Rotor Aerodynamic Group	2-30
2.6	Main Rotor Group	2-32
2.7	Tail Rotor Group	2-35
2.8	Wing Group	2-38
2.9	Stabilizing Surface Groups	2-42
2.10	Jet Group.	2-46
2.11	External Store/Aerodynamic Brake Group	2-47
2.12	Rotor Controls Group	2-49
2.13	Iteration Logic Group.	2-52
2.14	Flight Constants Group	2-53
2.15	Bobweight Group.	2-54
2.16	Weapons Group	2-55
2.17	SCAS Group	2-56
2.18	Stability Analysis Times Group.	2-58
2.19	Blade Element Data Printout Group.	2-59
2.20	Maneuver Time Card.	2-60
2.21	Variations From Trimmed Flight.	2-61
2.22	Plotting of Maneuver Time History Data	2-62
2.23	Harmonic Analysis of Maneuver Time History Data	2-63
2.24	Vector Analysis of Maneuver Time History Data.	2-64
2.25	Storing Maneuver Time History Data on Tape.	2-65

Preceding page blank

		Page
3.	USER'S GUIDE TO INPUT FORMAT	3-1
3.1	General	3-1
3.2	Identification and Program Logic Group	3-8
3.3	Data Table Group	3-27
3.4	Fuselage Group	3-36
3.5	Rotor Aerodynamic Group	3-47
3.6	Main Rotor Group	3-62
3.7	Tail Rotor Group	3-70
3.8	Wing Group	3-72
3.9	Stabilizing Surface Groups	3-94
3.10	Jet Group.	3-99
3.11	External Store/Aerodynamic Brake Group	3-100
3.12	Rotor Controls Group	3-103
3.13	Iteration Logic Group	3-113
3.14	Flight Constants Group	3-115
3.15	Bobweight Group.	3-117
3.16	Weapons Group	3-119
3.17	SCAS Group	3-120
3.18	Stability Analysis Times Group.	3-123
3.19	Blade Element Data Printout Group.	3-124
3.20	Maneuver Time Card.	3-125
3.21	Variations From Trimmed Flight.	3-127
3.22	Plotting of Maneuver Time History Data	3-139
3.23	Harmonic Analysis of Maneuver Time History Data	3-140
3.24	Vector Analysis of Maneuver Time History Data.	3-142
3.25	Storing Maneuver Time History Data on Tape.	3-144
3.26	Miscellaneous	3-145
4.	OUTPUT GUIDE.	4-1
4.1	Reference Systems	4-1
4.2	Sign Conventions	4-10
4.3	Output Groups for Input Data	4-18
4.4	Trim Iteration Page	4-29
4.5	Trimmed Flight Condition Pages.	4-33
4.6	Time-Variant Trim Data	4-40
4.7	Maneuver-Time-Point Printout	4-42
4.8	Time History Plots.	4-52
4.9	Output of Harmonic Analysis Routine	4-54
4.10	Vector Analysis Data	4-56
4.11	Output of Stability Analysis Routine.	4-58
4.12	Blade Element Aerodynamic Data.	4-72
4.13	Blade Element Bending Moment Data.	4-74

		Page
5.	DIAGNOSTIC AND ERROR MESSAGES	5-1
	5.1 General	5-1
	5.2 Messages	5-1
6.	VARIABLES SAVED DURING MANEUVERS	6-1
7.	REFERENCES	7-1

LIST OF ILLUSTRATIONS

Figure		Page
1-1	Trim-Only Operation	1-4
1-2	Trim Followed by Maneuver	1-5
1-3	Trim Followed by Maneuver With Stability Analysis	1-6
1-4	First Maneuver in Restart Procedure	1-7
1-5	Second and Later Restart Maneuvers	1-8
1-6	Trim and Stability Analysis.	1-9
1-7	Retrieving Maneuver Data Stored Permanently	1-10
1-8	Trim or Trim and Stability Analysis Followed by Parameter Sweep.	1-11
1-9	Block for Operations Performed on Maneuver Time History Data	1-12
1-10	Plotting Operation.	1-13
1-11	Harmonic Analysis Operation.	1-14
1-12	Vector Analysis and Data Reduction Operation	1-15
1-13	Operation for Storing Maneuver Time History Data on Tape	1-16
2-1	Example of Data Deck for MODEL Option	2-7
2-2	Schematic Diagram of Card Deck for RIVD Table	2-21
2-3	Schematic Diagram of Card Deck for a Set of RWAS Tables.	2-24
3-1	Schematic of Matrices Used in the Stability Analysis.	3-22
3-2	General Lift Coefficient Versus Angle of Attack Curve.	3-54
3-3	General Drag Coefficidnt Versus Angle of Attack Curve.	3-54

Figure		Page

3-4	Flow Chart for Steady-State Pitching Moment Calculation.	3-56
3-5	Typical Curves of Pitching Moment Coefficient Versus Angle of Attack at Various Mach Numbers	3-57
3-6	Set of Data Tables for the NACA 0012 Airfoil Section	3-59
3-7	Aerodynamic Surface Dihedral and Incidence Angles . . .	3-73
3-8	Wing Wake Model	3-87
3-9	Aerodynamic Surface Control Linkage	3-91
3-10	Effect of Rotor Downwash on the Flow Field at the Stabilizing Surfaces	3-97
3-11	Schematic Diagram of Rotor Control System	3-105
3-12	Schematic Diagram of Control Coupling/Mixing Box. . . .	3-110
3-12	Sample Output From Program AS812A.	3-152
4-1	Relationship of Ground, Body, and Fuselage Reference Systems	4-2
4-2	Relationship of Body and Aerodynamic Surface Reference Systems	4-6
4-3	Relationship of Body and Shaft Reference Systems. . . .	4-8
4-4	Reference System for Rotor Analysis	4-9
4-5	Relationship of Wind and Body (Component) Reference Systems	4-11
4-6	Blade Flapping and Elastic Displacement.	4-15
4-7	Message Card.	4-19
4-8	Partial Printout of Data Deck Listing	4-20
4-9	Problem Identification and Basic Input Data Group . . .	4-21
4-10	Aeroelastic Blade Data	4-25

Figure		Page
4-11	Maneuver Specification	4-28
4-12	Trim Iteration Page	4-30
4-13	Trimmed Flight Condition Page	4-34
4-14	Optional Trim Page	4-38
4-15	Partial Printout of Time-Variant Trim Data	4-41
4-16	Harmonic Analysis Following Time-Variant Trim	4-43
4-17	Bending Moment Summary Following Time-Variant Trim	4-44
4-18	Maneuver-Time-Point Printout Page	4-48
4-19	Rotor Elastic Response During Maneuver	4-51
4-20	Example Time History Plot	4-53
4-21	Output of Harmonic Analysis Routine	4-55
4-22	Vector Analysis Data	4-57
4-23	Control Partial Derivative Matrix From STAB	4-60
4-24	Example of Partial Derivatives for STAB Degrees of Freedom	4-61
4-25	Rotor and Total Partial Derivative Matrices	4-64
4-26	Stability Matrices and Stick-Fixed Stability Results	4-65
4-27	Examples of Mode Shapes of Stability Results	4-69
4-28	Numerator of Transfer Function	4-71
4-29	Frequency Response of Transfer Functions	4-73
4-30	Blade Element Aerodynamic Data	4-77
4-31	Blade Element Bending Moment Data	4-80

LIST OF TABLES

Table		Page
2-1	Sequential Summary of Input Groups	2-2
2-2	Input Data Arrays Included in NAMELIST Specification Statement	2-5
3-1	Rotor Analysis Used During Trim and Maneuver	3-18
3-2	Systems of Equations Used in Trim	3-19
3-3	Radial Stations for Induced Velocity Distribution Tables	3-33
3-4	Fuselage Lift Equations	3-40
3-5	Fuselage Drag Equations	3-41
3-6	Fuselage Pitching Moment Equations	3-42
3-7	Fuselage Side Force Equations	3-43
3-8	Fuselage Rolling Moment Equations	3-44
3-9	Fuselage Yawing Moment Equations	3-45
3-10	Relationship of Unsteady and Yawed Flow Models	3-48
3-11	Basic Rotor Control Rigging	3-104
3-12	Definitions of Control System Variables	3-108
3-13	Control Coupling Linkages	3-108
3-14	Intermediate Control Angles	3-109
3-15	Complete Model for Collective and Swashplate Angles	3-111
3-16	Reset Values for Control Inputs	3-112
3-17	Rotor Naming Convention	3-145
4-1	Output Groups	4-3
4-2	Sign Conventions for Rotor Related Parameters	4-12
4-3	Conventions for Specific Configurations	4-13

Table		Page
4-4	Definitions of Blade Element Aerodynamic Parameters. . .	4-75
6-1	Code Numbers for Variables Saved	6-2

1. INTRODUCTION

The purposes of this volume of the report are to inform the reader of the capabilities of the current master version of the Rotorcraft Flight Simulation Program C81 and to provide the information necessary for assembling an input data deck and successfully executing the program. With respect to the most recently documented version of the program (ASAJ01) described in Reference 1, the program has been expanded in both inputs and capabilities to a point where few comparisons can be made. The basic format of inputting data in groups which correspond to components of the rotorcraft (e.g., fuselage, rotors, and aerodynamic surfaces) has been maintained. However, the mathematical model and input format of every component included in ASAJ01 has been revised, and new components have been added.

This version of the program, designated AGAJ73, is capable of modeling the following components of a rotorcraft: a fuselage; two rotors, each with a dynamic pylon, aeroelastic blades, and a nacelle; a wing; four stabilizing surfaces, none of which must be purely vertical or horizontal; four external stores or aerodynamic brakes; a nonlinear, coupled control system including a collective bobweight, stability and control augmentation system, and automatic pilot simulator; two jets; and a weapon.

The five sections following this introduction present only the information required to set up and successfully execute a C81 simulation. The reader is referred to Volume I for complete documentation of the programmed mathematical models and to Volume III for detailed information regarding the computer program hardware requirements and software.

Section 2 of this report lists the input data to the program in a sequence which corresponds to the input and card sequence required for the data deck. The inputs are grouped according to either their function in the program or the rotorcraft component they simulate. For example, the names of three of the input groups are the Program Logic Group, the Main Rotor Group, and the Wing Group. Each group is read into an array. The array name is given in all uppercase letters at the left of the input sequence numbers in Section 2. Except for the first letter, the array names were chosen to be very abbreviated acronyms for the title of the group or component. As an aid to the user and the programmer, a special convention was established for the first letter of each array: arrays beginning with the letter I control program logic; arrays beginning with Y contain the inputs used in the equations which compute the aerodynamic forces on the rotor blades, wing, and stabilizing surface; arrays beginning with T contain times which are used during maneuvers; and arrays beginning with X contain for the most part inputs which are physically measurable quantitites, e.g., locations, weights, angles, lengths and control linkages.

Where possible, the definition of each input is a brief, one-line description with the required units, if any, given in parentheses at the right end of the line. However, some inputs cannot be defined so concisely. In some of these cases, the FORTRAN symbol assigned to the input in the program is listed. The symbol is generally an acronym for the input which will have meaning to the experienced user of the program.

In all cases where a FORTRAN array or variable name is used, the standard FORTRAN convention for the format of the input applies. That is, if the first letter of an array or symbol is I, J, K, L, M, or N, the corresponding input must be a fixed point number (integer), i.e., "I" format code. All fixed point inputs must end in the right-most column of the field for the input and must not contain a decimal point. If the first letter is not one of the six listed above, the input must be a floating point (decimal) number, i.e., "F" format code. In view of the floating point formats used in C81, all such inputs should include a decimal point. If the decimal point is omitted, it is placed at the far right end of the field. For example, if the number one is punched in the first column of a ten-column field and the decimal point is omitted, the number will be interpreted as 1000000000.0 rather than the 1.0 intended.

Section 2 is designed to be the only documentation that a very experienced user needs to set up an input deck. The less-experienced user should consult Section 3 for a more complete explanation of the inputs, setup of the deck, and program options. This section is arranged in the same order as Section 2 and includes many of the equations used in the various mathematical models.

Section 4 provides information on the output of the program. The first major subsection discusses the sign conventions, including definitions of the reference systems used, and can be useful in setting up the deck as well as interpreting output. The second major subsection explains each group of output which the program can generate during a successful execution. The vast majority of the groups are output on the computer printer. This printed output falls into three general categories: input, trim, and maneuver data. In addition, some of the maneuver data can be output on a CALCOMP plotter. Examples of all possible groups of output data were taken from actual computer runs and are included in the section.

Section 5 lists and discusses the error messages which the program can generate. Some of the errors terminate program execution, while others are only warnings of conditions which may affect the data being computed. In each case, the source of the error is noted, and where necessary a suggestion on how to correct the error is given. Section 6 identifies the variables which are saved for future analysis during the computation of maneuvers.

In this document, the rotors are referred to as Main Rotor (or Rotor 1) and Tail Rotor (Rotor 2). In the output, additional names, which are appropriate to the rotorcraft configuration, are used. All rotor names fall into two groups:

(1) Rotor 1, First, Main, Right, Forward

(2) Rotor 2, Second, Tail, Left, Aft

The names within a group may be considered synonymous, with context determining the appropriate word. The groups also indicate the input groups which should be used for a specific rotor. For example, inputs for the forward rotor of a tandem-rotor configuration should be input to the Main Rotor Group and the aft rotor inputs to the Tail Rotor Group. However, this input sequence is not mandatory. (The program does not verify that Rotor 1 is actually forward or right of Rotor 2.) With careful attention to the rotor control linkages, the two rotor groups can be swapped to reverse the direction of rotation of each rotor. See Section 3.26.1 for additional details.

1.1 PRIMARY AND SECONDARY OPERATIONS OF THE PROGRAM

The general operations of which the program is capable are:

(1) Computing a trimmed flight condition

(2) Computing a maneuver

(3) Performing a stability analysis

(4) Performing parameter sweeps of trim conditions

(5) Retrieving maneuver time history data stored on magnetic tape

(6) Plotting maneuver time history data

(7) Harmonic analysis of maneuver time history data

(8) Vector analysis of maneuver time history data

(9) Storing maneuver time history data on magnetic tape

The first five general operations are primary operations and are illustrated in the flow charts in Figures 1-1 through 1-8. These operations are shown alone, if possible, and in all permissible combinations with other operations. The last four operations are secondary operations and occur within the block labeled "Operations on Maneuver Time History Data" in Figures 1-2, 1-3, 1-4, 1-5, and 1-7. The flow chart for the contents of this block is shown in Figure 1-9. The flow charts of the four secondary operations contained in the block are shown in Figures 1-10 through 1-13.

Each primary operation or combination of operations is controlled by input data. Thus, the flow charts for the primary operations all begin with a "Read Data Deck" block. Since the amount of data to be read depends on the operation or operations desired, a data deck in this

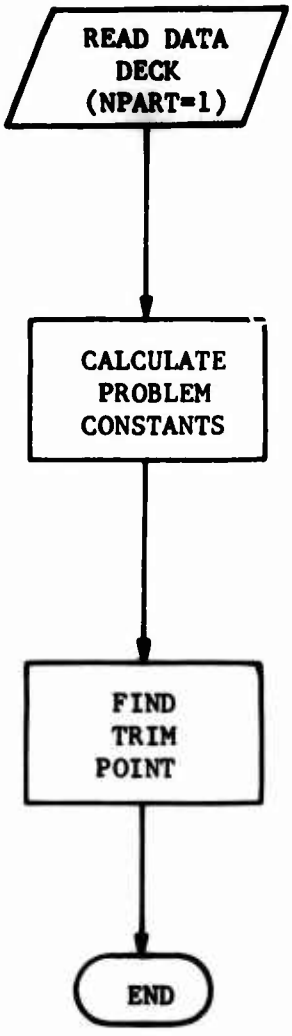

Figure 1-1. Trim-Only Operation.

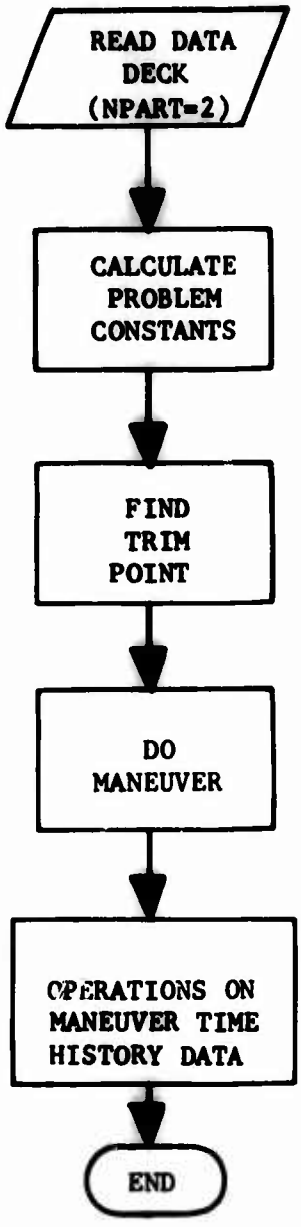

Figure 1-2. Trim Followed by Maneuver.

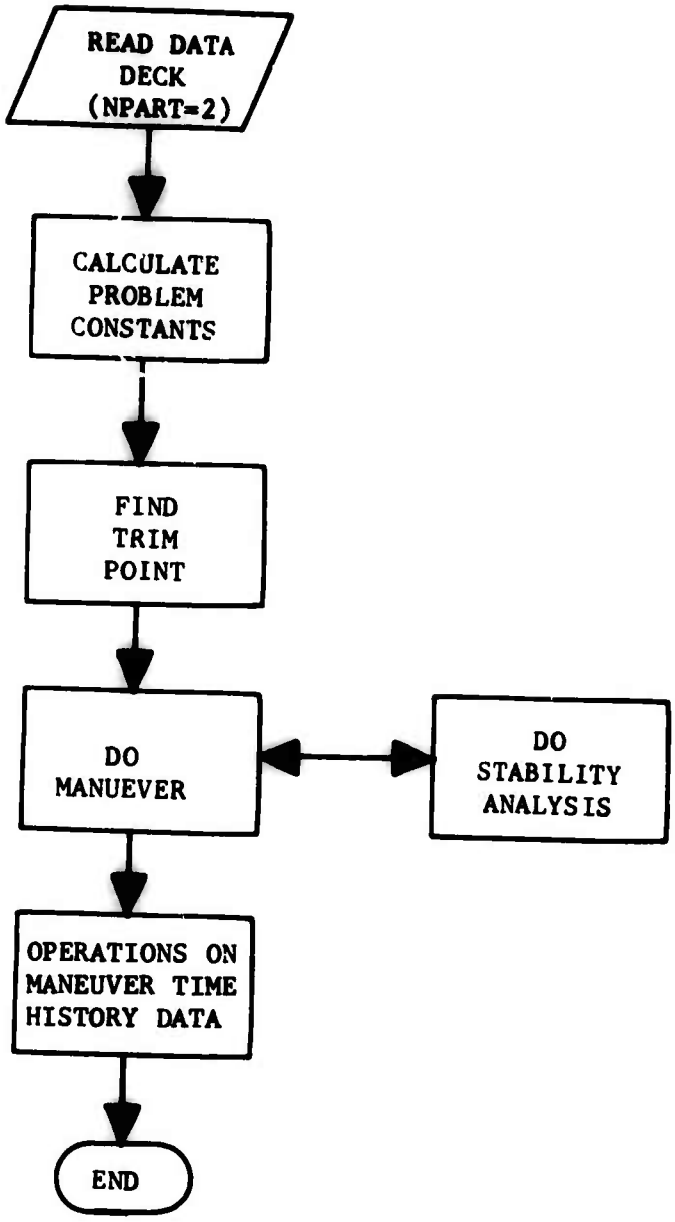

Figure 1-3. Trim Followed by Maneuver With Stability Analysis.

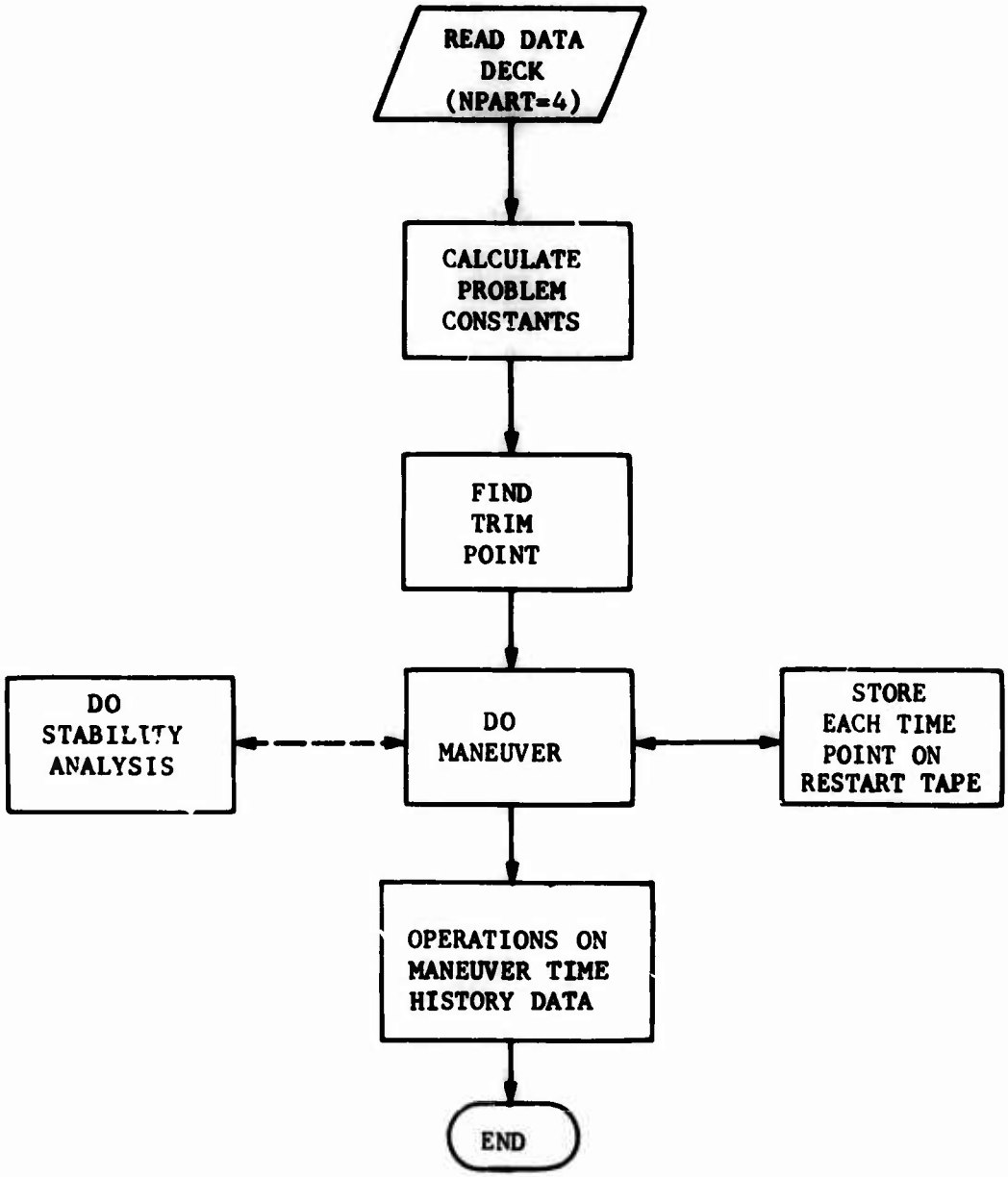

Figure 1-4. First Maneuver in Restart Procedure.

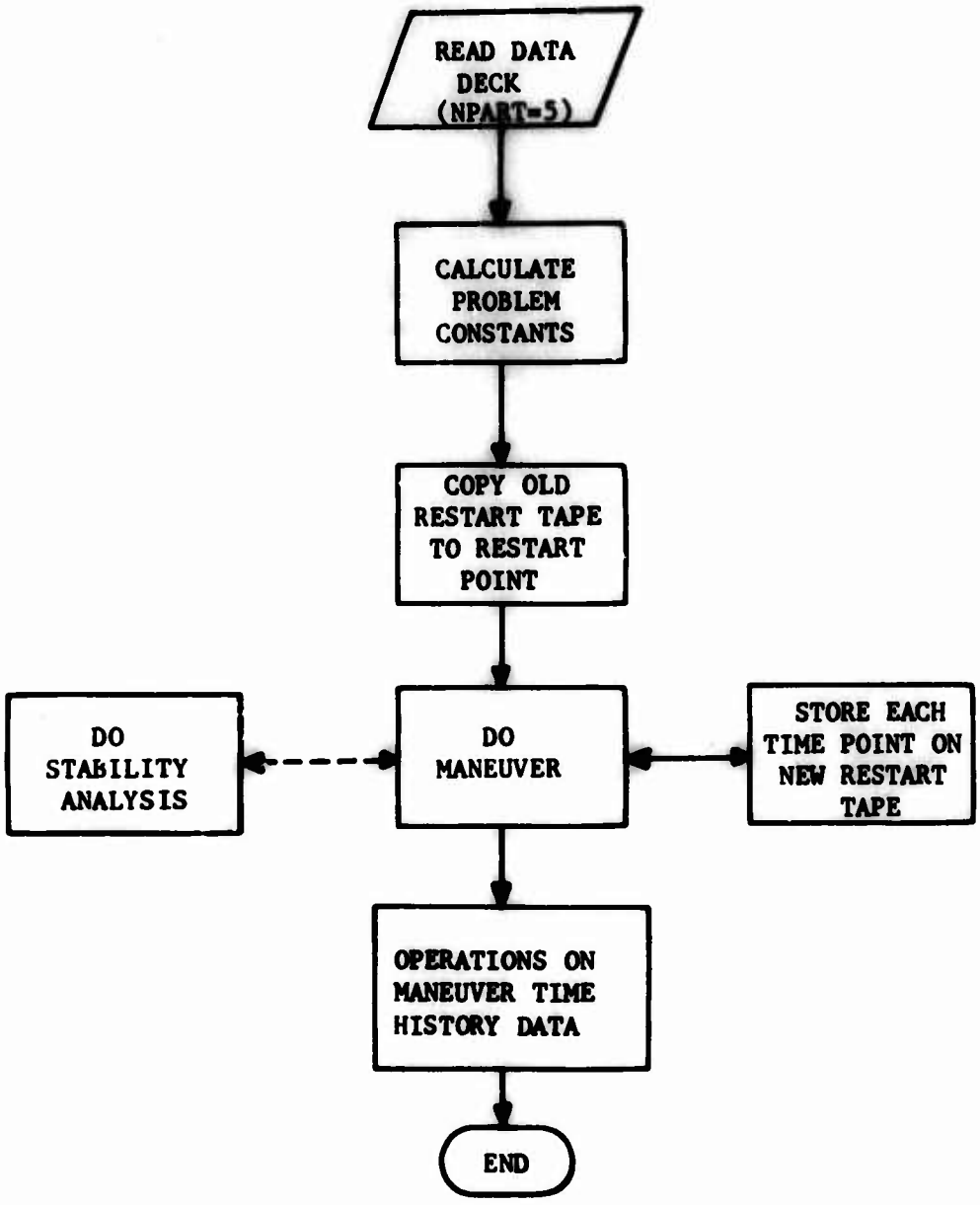

Figure 1-5. Second and Later Restart Maneuvers.

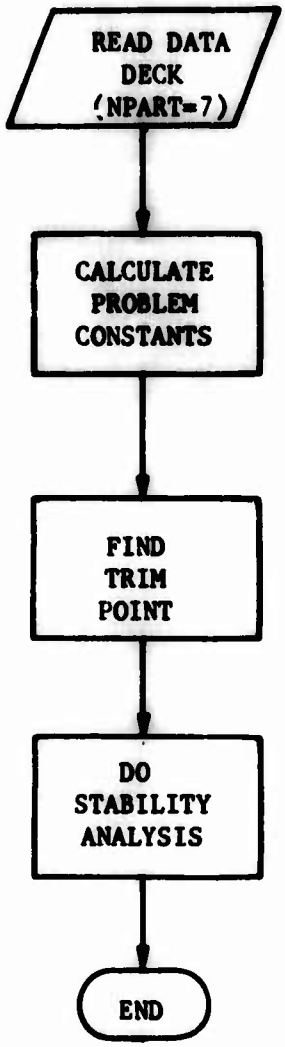

Figure 1-6. Trim and Stability Analysis.

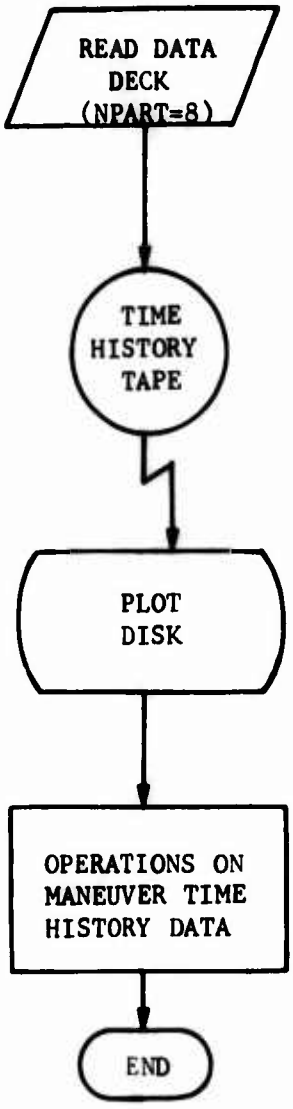

Figure 1-7. Retrieving Maneuver Data Stored Permanently.

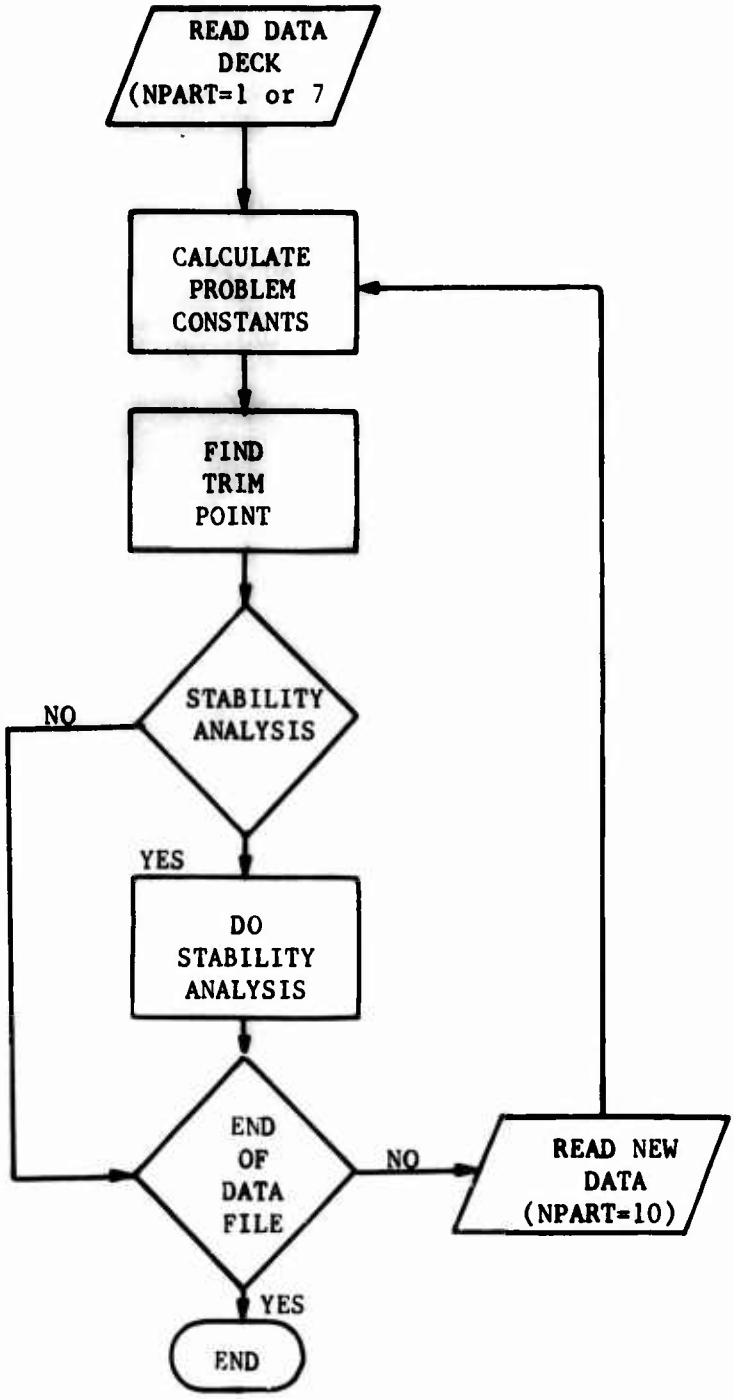

Figure 1-8. Trim or Trim and Stability Analysis Followed by Parameter Sweep.

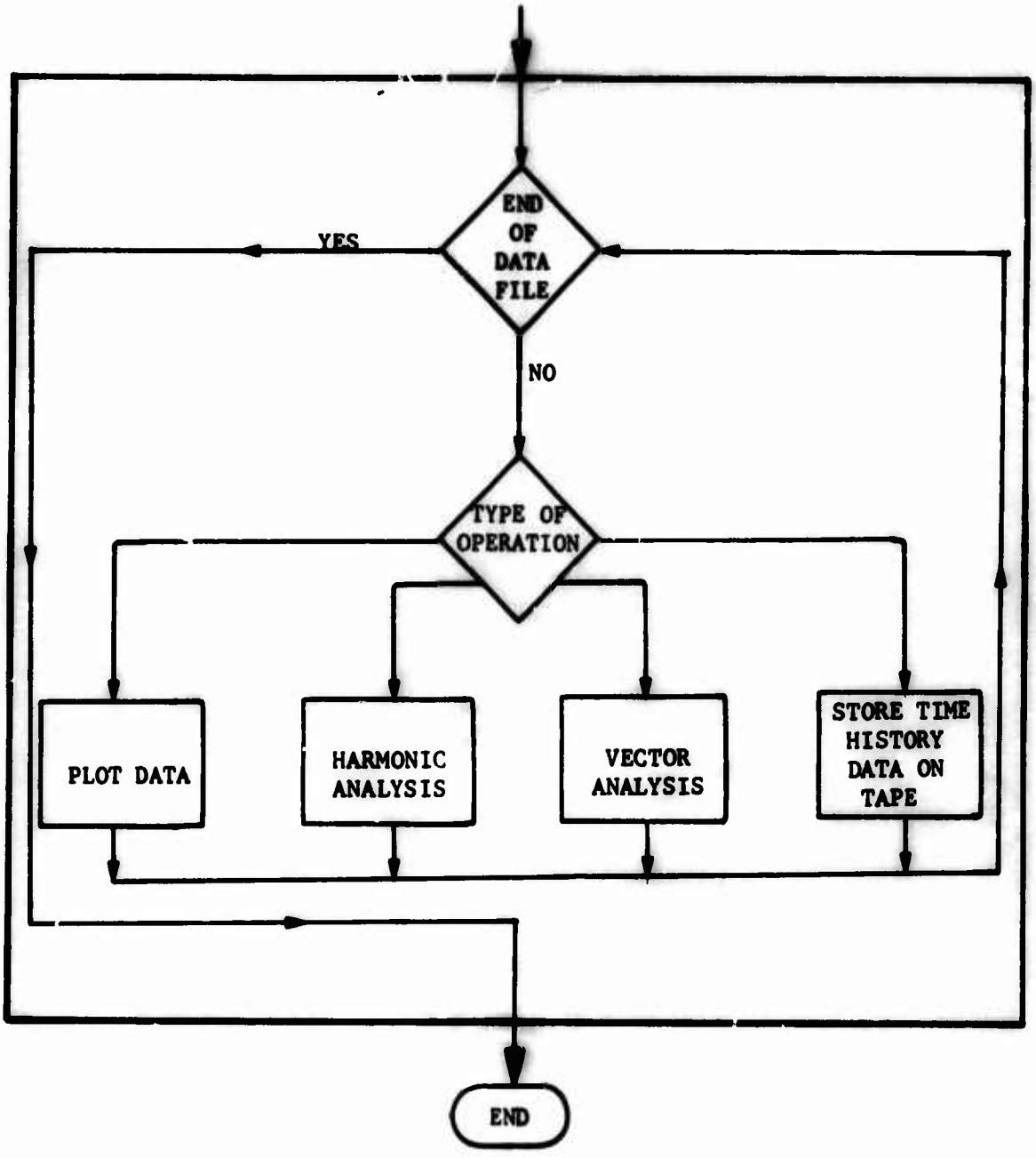

Figure 1-9. Block for Operations Performed on Maneuver Time History Data.

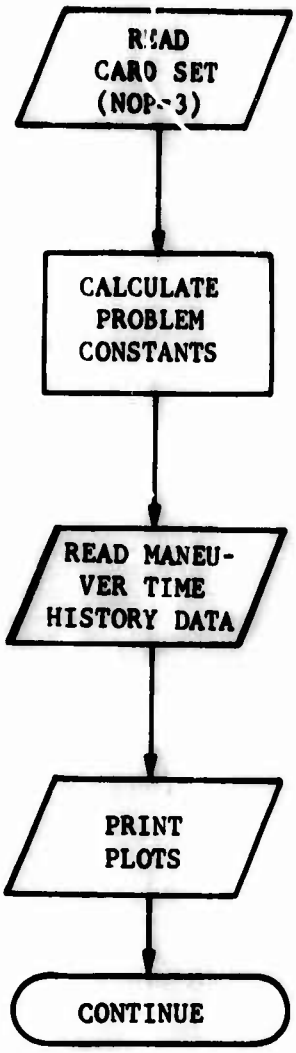

Figure 1-10. Plotting Operation.

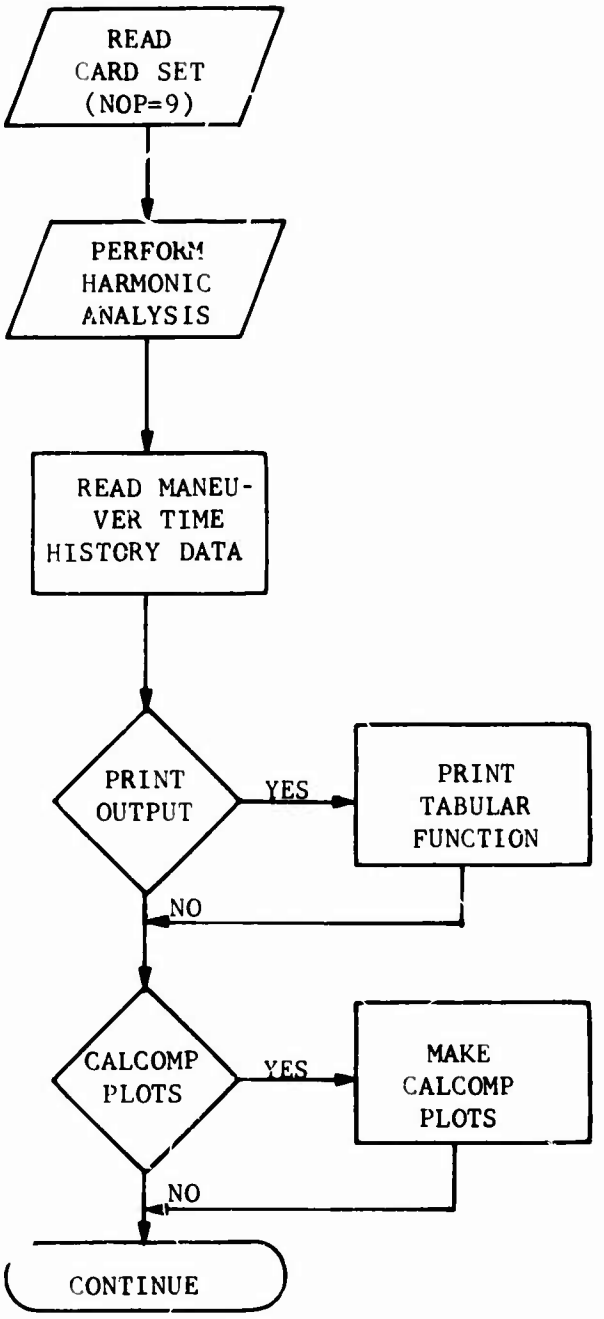

Figure 1-11. Harmonic Analysis Operation.

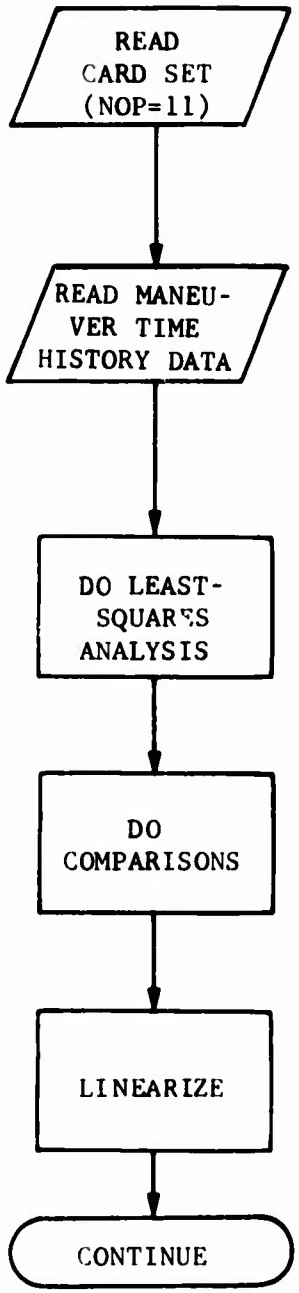

Figure 1-12. Vector Analysis and Data Reduction Operation.

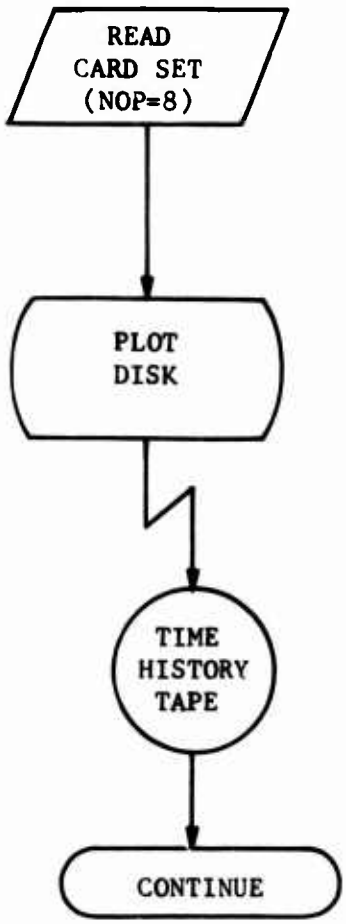

Figure 1-13. Operation for Storing Maneuver Time History Data on Tape.

context consists of a message card, an "NPART" card telling the program which primary operation or operations to perform, and the additional data necessary to perform the indicated operation(s). In some cases, the additional data are contained on 100 or more additional cards, e.g., trim, stability analysis, maneuver. In other cases, as little as one card of additional data is required, e.g., data retrieval followed by only one secondary operation.

As is implied by Figures 1-1 through 1-8, data decks of primary operations other than parameter sweeps cannot be stacked one after the other; each deck must be submitted as a separate computer job. This situation does not impose any significant hardship on the user, since

(1) the parameter sweep operation can be used to replace stacked trim-only (TRIM) and trim-and-stability-analysis (TRIM-STAB) decks, and

(2) in practice, the need to run more than one maneuver in a single job rarely, if ever, occurs.

The second step in several of the flow charts is "Calculate Problem Constants." In each operation containing this step, a number of quantities which remain constant throughout the performance of the operation(s) must be defined using the input data. For example, the density ratio is computed from the input pressure altitude and temperature; the length of a blade segment for each rotor is computed from the radius of the corresponding rotor; the body reference distances from the center of gravity to the location of specific rotorcraft components are computed. Performing such computations drastically reduces the number of program inputs and also provides program flexibility necessary for incorporating such operations as parameter sweeping.

1.2 DISCUSSION OF THE PROGRAM OPERATIONS

1.2.1 Primary Operations

In finding the trim point, the program iterates on the pilot's control positions, fuselage orientation, and/or rotor attitude in space to reach desired values of the rotor flapping moments and forces and moments on the fuselage center of gravity. When these desired values are all zero, the trim point is an unaccelerated flight condition. With controls locked and no external disturbances such as gusts, the rotorcraft would theoretically continue indefinitely along the straight flight path prescribed by the program inputs. Sometimes the desired values of the forces and moments are not all zero. In this case, the use of the word "desired" rather than "predetermined" is significant because the desired values depend on the trim point. Two different results are possible in this case. In one, the rotorcraft is in a pushover or pull-up condition at a predetermined g-level. In the other, the rotorcraft is in a banked turn, either level or spiral, at a predetermined g-level. Either condition may be used as the starting point for a maneuver.

The stability analysis operation uses a trim point or a time point during a maneuver as its initial condition. The stability derivatives are computed by making small independent perturbations to each of the rotorcraft degrees of freedom and primary flight controls; computing the forces and moments in the perturbed flight condition; subtracting the values of forces and moments in the initial condition from those at the perturbed condition; and finally dividing the differences by the appropriate perturbations. Using these derivatives, the roots to the rotorcraft equations of motion, mode shapes associated with the roots, and transfer functions for the rotorcraft system are computed.

The parameter sweep operation may be used to simulate the stacking of TRIM and TRIM-STAB data decks for a given rotorcraft. Within a sweep deck, the user specifies by input data those cases in the sweep for which a stability analysis is and is not to be performed. The parameters most frequently swept include airspeed, gross weight, center of gravity stationline, incidence of an aerodynamic surface, atmospheric conditions, and g-level. Generally within a single sweep deck, only one parameter is changed from case to case. However, any number and combination of inputs except some program logic switches and the values in data tables may be swept. The assumption is made that each desired trim condition bears some relationship to the previous one, and further that the previous trim point is a good starting condition for finding the next trim point. For example, in a speed sweep, a change of 20 or 30 knots is the most that should normally be used between 40 and 150 knots. Outside of this range, the maximum change should not exceed 10 knots.

All maneuvers require a trim point prior to computing the time history of a maneuver. The trim point is used to supply the initial conditions to a system of differential equations which describe the behavior of a rotorcraft in a maneuver. Various external inputs, or forcing functions, may be applied. Examples are control movements, gusts, store drops, and wing incidence change independent of control motion(s). The user has the option of specifying that the equations be numerically integrated by one of two methods: four-cycle Runge-Kutta or Hamming's method. At times specified by input data, the maneuver is suspended while a stability analysis is performed. The maneuver is then resumed as if no interrpution has occurred and continued until it reaches either the next time point to do a stability analysis or the end of the maneuver.

A maneuver restart operation is begun just like an ordinary maneuver using a trim condition as a starting point. The only difference is that the time history variables and many intermediate variables must be saved on the magnetic restart tape. Subsequent maneuver restarts use the condition at one of the saved time points and so do not require a trim condition or the complete data set defining the rotorcraft.

1.2.2 Secondary Operations

During the course of running all maneuvers, the values of a large number of time history variables at each time point are saved on the plot disk.

At the conclusion of the maneuver, the secondary program operations specified in the input data are performed on these variables. For example, the user may select any of the saved variables to be plotted on the printed output or on finished 8½ x 11 CALCOMP pages if such are available. Plots made as part of a maneuver restart run will show the entire maneuver starting at time zero.

A complete harmonic analysis may also be made for any of the saved variables. A Fast-Fourier-Transform technique is used to examine a broad range of frequencies. This option is especially useful for studying rotor bending moments and related variables.

Frequently, maneuvers are run where one of the controls or the fore-and-aft mast tilt angle is varied sinusoidally. In this case, the vector analysis operation can be very useful. This analysis uses the least-squared-errors technique to fit the saved data to a curve of the form

$$F_i(t) = A_i \sin(\omega t + \phi_i) + B_i$$

Then, any amplitude ratios, A_i/A_j, and phase angle differences, $\phi_i - \phi_j$, may be computed. Lastly, linear combinations of the variables may be derived in the following form:

$$F_i(t) = C_i\ F_j(t) + D_i\ F_k(t) + E_i$$

If the user thinks he may want to perform additional plotting or analysis of the saved variables, they may be transferred from the plot disk to a magnetic time history tape. Later the data on the tape may be reloaded to the plot disk for any use desired.

1.3 PROGRAMMING AND DOCUMENTATION CONSIDERATIONS

A great deal of effort was expended to make the program as user-oriented as possible. For example, many of the program logic switches which were previously buried deeply in some of the input groups have been moved to the new Program Logic Group, the first input group to the program. This new group also provides switches for significantly reducing the size of the data deck when certain groups are not needed, as in a wind tunnel simulation.

Also, the documentation of the input format (Section 2) has been expanded and the entire user's guide to the input format (Section 3) has been extensively rewritten and expanded to make the definition of the inputs as clear and specific as possible. The definitions are not all easy to understand because of the very nature of some of the variables, but it is thought that the definitions presented leave room for only one interpretation. A sample set of input data for a typical attack helicopter is included in Section 4 along with a detailed discussion of the program output so that the user can get an idea of the magnitude of most program inputs and outputs.

2. INPUT FORMAT

This section of the report presents the basic input format for an AGAJ73 card deck. The first subsection contains general information regarding the structure of and program features related to the card deck. The remaining subsections define the inputs to each of the basic input groups to the program. The groups are described in the same sequence in which they occur in the data deck.

For the very experienced user of C81, Section 2 is frequently the only documentation that is needed to set up, execute, and make changes to a data deck. When more explanation is required, the user should consult Section 3 which is arranged in the same order as Section 2 and includes detailed discussions of input definitions, program options, and many of the equations used in the program.

2.1 GENERAL

2.1.1 Composition of a Data Deck and Card Format

A complete input data deck for AGAJ73 can be divided into the forty-six groups or sets of cards listed in Table 2-1. The first thirty-eight groups form the basic card deck which is used for trim-only and trim-and-stability-analysis-only program operations. The remaining eight groups are only included in the deck when the maneuver program operation is to be performed.

The Program Logic Group should be considered one of the most important groups in the deck. It controls which groups must be included in the deck and the program options that will be used in the computations. The input format for this group is fourteen integers per card with five column fields for each input (14I5 format). A primary reason for the integer format is to set the group apart from the rest of the groups where the vast majority of the inputs are floating point numbers.

Except for the Program Logic Group, a standard format of seven floating point numbers in ten column fields per card (7F10.0 format) is used wherever practical in the deck. Only the exceptions to this standard format are noted in the following sections. Where the format cannot be conveniently expressed by a FORTRAN statement like 7F10.0, the location of the input on the card is specified by the column or field of columns for the input. Unless otherwise noted, all formats start in Column 1 with Columns 71 through 80 reserved for card sequence number.

2.1.2 Group Identification Cards and Data Library

In Table 2-1 the input groups which include a Group Identification (ID) Card are noted by the inclusion of a sequence number for the ID card.

TABLE 2-1. SEQUENTIAL SUMMARY OF INPUT GROUPS

Group Title	Sequence Number of ID Card *	Element Number in MODEL Data Set Array **	Discussed in Section
Deck Identification & Program Flow Cards	None	N/A	2.2
Program Logic Group	05	1	2.2
Data Table Group	None	N/A	2.3
Airfoil Data Table No. 1	11	2	2.3.1.1
Airfoil Data Table No. 2	12	3	2.3.1.2
Airfoil Data Table No. 3	13	4	2.3.1.3
Airfoil Data Table No. 4	14	5	2.3.1.4
Airfoil Data Table No. 5	15	6	2.3.1.5
M/R Aeroelastic Blade Data Block	16	7	2.3.2.1
T/R Aeroelastic Blade Data Block	17	8	2.3.2.1
M/R Rotor-Induced Velocity Distribution (RIVD) Table	18	9	2.3.3.1
T/R RIVD Table	19	10	2.3.3.2
RWAS Table No. 1	***	11	2.3.4
RWAS Table No. 2	***	12	2.3.4
RWAS Table No. 3	***	13	2.3.4
RWAS Table No. 4	***	14	2.3.4
RWAS Table No. 5	***	15	2.3.4
RWAS Table No. 6	***	16	2.3.4
RWAS Table No. 7	***	17	2.3.4
RWAS Table No. 8	***	18	2.3.4
RWAS Table No. 9	***	19	2.3.4
RWAS Table No. 10	***	20	2.3.4
RWAS Table No. 11	***	21	2.3.4
RWAS Table No. 12	***	22	2.3.4
Fuselage Group	20	23	2.4
Rotor Aerodynamic Group	30	24	2.5

TABLE 2-1. Continued

Group Title	Sequence Number of ID Card *	Element Number in MODEL Data Set Array **	Discussed in Section
Main Rotor Group	40	25	2.6
Tail Rotor Group	50	26	2.7
Wing Group	60	27	2.8
Stabilizing Surface No. 1 Group	70	28	2.9.1
Stabilizing Surface No. 2 Group	80	29	2.9.2
Stabilizing Surface No. 3 Group	90	30	2.9.3
Stabilizing Surface No. 4 Group	100	31	2.9.4
Jet Group	110	32	2.10
External Store/Aerodynamic Brake Group	120	33	2.11
Rotor Controls Group	130	34	2.12
Iteration Logic Group	140	35	2.13
Flight Constants Group	None	N/A	2.14
Bobweight Group	200	36	2.15
Weapons Group	210	37	2.16
SCAS Group	220	38	2.17
Stability Analysis Times Group	230	39	2.18
Blade Element Data Printout Times Group	240	40	2.19
Maneuver Time Card	None	N/A	2.20
Maneuver Specification Cards	None	N/A	2.21
Maneuver Analysis Cards	None	N/A	2.22→ 2.25

* None indicates the group does not have an identification (ID) card.

** N/A indicates the group is not included in the MODEL data set array.

*** No specific sequence number on RWAS Table ID Cards.

The format for each of these ID cards is as follows:

Field	Description of the Input
Col. 1→8	IDEN, Data library name for the Group
Col. 11→70	Alphanumeric identifying comments (optional)
Col. 71→80	Card sequence numbers (optional)

If the user's version of AGAJ73 does not include the Data Library Option, Columns 1 through 8 (IDEN) must be blank. If this option is included, IDEN may be used to call the required inputs for the corresponding group from the data library. If MODEL Option data sets are stored in the library, IDEN on CARD 05 (Program Logic Group ID Card) may be used to call a complete set of groups from the library.

Input data which are called from library and whose array name is included in the list in Table 2-2 can be updated with the &CHANGE program feature. When the MODEL Option is used, the &GROUPS program feature can be used to replace entire groups in the MODEL Option data set by reference to the element number given in Table 2-1. Figure 2-1 shows an example MODEL Option data deck with the &CHANGE and &GROUPS features employed. See Section 3.1.2 for a complete discussion of the Data Library and MODEL Options. See Section 3.1.3 for explanation of the &CHANGE and &GROUPS program features.

TABLE 2-2. INPUT DATA ARRAYS INCLUDED IN NAMELIST SPECIFICATION STATEMENT

Array Name and Range of Subscripts	Description of Array
IPL(1→35)	Program Logic Group
XMW(1→63)	Main Rotor Weight & Inertial Distribution
XTW(1→63)	Tail Rotor Weight & Inertial Distribution
XFS(1→98)	Fuselage Group
YRR(1→35,1)	RAA Subgroup No. 1
YRR(1→35,2)	RAA Subgroup No. 2
YRR(1→35,3)	RAA Subgroup No. 3
YRR(1→35,4)	RAA Subgroup No. 4
YRR(1→35,5)	RAA Subgroup No. 5
XMR(1→49)	Main Rotor Group
XMP(1→14)	Main Rotor Dynamic Pylon
XMC(1→20)	Main Rotor Chord Distribution
XMT(1→20)	Main Rotor Twist Distribution
IDTABM(1→20)	Main Rotor Airfoil Distribution
XTR(1→49)	Tail Rotor Group
XTP(1→14)	Tail Rotor Dynamic Pylon
XTC(1→20)	Tail Rotor Chord Distribution
XTT(1→20)	Tail Rotor Twist Distribution
IDTABT(1→20)	Tail Rotor Airfoil Distribution
XWG(1→42)	Wing Group (Basic)
YWG(1→28)	Wing Aerodynamics
XCWG(1→14)	Wing Control Linkages
XSTB1(1→35)	Stabilizing Surface No. 1 Group (Basic)
YSTB1(1→28)	Surface No. 1 Aerodynamics
XCS1(1→14)	Surface No. 1 Control Linkages
XSTB2(1→35	Stabilizing Surface No. 2 Group (Basic)
YSTB2(1→28)	Surface No. 2 Aerodynamics
XCS2(1→14)	Surface No. 2 Control Linkages
XSTB3(1→35)	Stabilizing Surface No. 3 Group (Basic)
YSTB3(1→28)	Surface No. 3 Aerodynamics

TABLE 2-2. Continued.

Array Name and Range of Subscripts	Description of Array	
XCS3(1→14)	Surface No. 3 Control Linkages	
XSTB4(1→35)	Stabilizing Surface No. 4 Group (Basic)	
YSTB4(1→28)	Surface No. 4 Aerodynamics	
XCS4(1→14)	Surface No. 4 Control Linkages	
XJET(1→14)	Jet Group	
XST1(1→21)	Store/Brake No. 1	External Store/ Aerodynamic Brake Group
XST2(1→21)	Store/Brake No. 2	
XST3(1→21)	Store/Brake No. 3	
XST4(1→21)	Store/Brake No. 4	
XCON(1→28)	Rotor Controls Group (Basic)	
XCRT(1→28)	Supplementary Rotor Controls	
XIT(1→21)	Iteration Logic Group	
XFC(1→28)	Flight Constants Group	
XBW(1→14)	Bobweight Group	
XGUN(1→7)	Weapons Group	
XSCAS(1→28)	SCAS Group	
TSTAB(1→14)	Stability Analysis Times Group	
TAIR(1→14)	Blade Element Data Printout Times Group	

The following sets of inputs are specifically excluded from the NAMELIST specification statement:

(1) All airfoil data tables

(2) All mode shapes for both rotors

(3) Both RIVD tables

(4) All RWAS tables

```
        RETURN TO JOHN M. DAVIS    S&C GROUP  EXT 2886                    CARD    00
 2   6                                                                    CARD    01
  11027301 MODEL 209  AH-1G  HUEYCOBRA WITH 4 M200A1 RKT LAUNCHERS        CARD    02
  19 RKTS EACH INBOARD STORE: 14 RKTS EACH OUTBOARD STORE                 CARD    03
EXAMPLE DECK FOR DEMONSTRATING THE &GROUPS AND &CHANGE FEATURES           CARD    04
MODL209A  MODEL OPTION CARD FOR HUEYCOBRA                                 CARD    05
 &GROUPS MODEL(2)='CLCDC090'.MODEL(40)='          '.MODEL(35)='          '.&END
1.0       15.0      1.0       1.0                                         CARD   141
0.15      0.15      1000.     200.      1.0       0.1       1500.         CARD   142
25.       25.       25.       25.       25.       25.       5.            CARD   143
100.      0.0       0.0       1000.     0.0       -3.824    -.774         CARD   151
19.7      53.1      54.0      33.9      0.0                               CARD   152
0.55      -.275     1.757     0.012     9377.36   277.18                  CARD   153
                    2000.     6600.     0.0                               CARD   154
0.0       0.5       1.0       1.5       2.0       9999.     0.0           CARD   241
0.0       0.0       0.0       0.0       0.0       0.0       0.0           CARD   242
 &CHANGE XFS(1)=8000..TSTAB=0.0..5.12*9999.. &END
0.0       15.0      3.0                                                   CARD   301
    1     0.1       -3.0      0.5                                         CARD   311
```

Figure 2-1. Example Data Deck for MODEL Option.

2.2 IDENTIFICATION AND PROGRAM LOGIC GROUP

CARD 00 Message card. Columns 1-80, alphanumeric.

CARD 01

Col. 1 - 2	NPART (permissible values are 1, 2, 4, 5, 7, 8, and 10)
Col. 4 - 6	NPRINT
Col. 11 - 15	NVARA
Col. 31 - 35	NVARB
Col. 51 - 55	NVARC

CARD 02

Col. 3 - 10	IPSN
Col. 11 - 70	Identifying Comments

CARD 03

Col. 1 - 68	Identifying Comments

CARD 04

Col. 1 - 68	Identifying Comments

CARD 05 Program Logic Identification Card

CARD 06 Input Group Control Logic (14I5 format)

IPL
(1) Switch for reading reduced data deck (0 = off)
(2) Number of airfoil data tables (= 0, 1, 2, 3, 4, or 5)
(3) Number of M/R mode shape inputs (0 = none)
(4) Number of T/R mode shape inputs (0 = none)
(5) Switch for reading rotor-induced velocity distribution table (0 = off)
(6) Number of Rotor Airfoil Aerodynamic Subgroups (= 1, 2, 3, 4, or 5)
(7) Switch for deleting rotor groups (0 = off)
(8) Switch for reading rotor pylon cards (0 = off)
(9) Switch for reading wing inputs (0 = off)
(10) Switch for reading Stabilizing Surface inputs (0 = off)
(11) Switch for reading Jet Group (0 = off)
(12) Number of Store/Brake subgroups (= 0, 1, 2, 3, or 4)
(13) Switch for reading Supplemental Rotor Controls subgroup (0 = off)
(14) Switch for reading maneuver input groups (0 = off)

CARD 07 Analysis Logic (14I5 format)

IPL (15) Flight condition indicator (0 = turn or unaccelerated flight)
(16) Euler angle iteration selector for TRIM (0 = holds yaw angle constant)
(17) Switch for computing partial derivative matrix (0 = every fifth iteration)
(18) Control variable for main rotor steady-state aerodynamics
(19) Control variable for tail rotor steady-state aerodynamics
(20) Switch for activating unsteady rotor aerodynamic options (0 = off)
(21) Switch for specifying which rotor can use the time-variant (TV) analysis (0 = none; both rotors use quasi-static (QS) analysis)
(22) Switch for activating TV analysis in TRIM and MANU when IPL(21) $\neq$ 0 (0 = QS trim followed by TV trim and maneuver)
(23) Control variable for rebalancing main rotor in TRIM (0 = off)
(24) Control variable for rebalancing tail rotor in TRIM (0 = off)
(25) Print control for trim iteration data (0 = minimum output)
(26) Print control for optional trim page (0 = page omitted)
(27) Print control for blade element aerodynamic data (0 = none)
(28) Switch for locking fuselage degrees of freedom in maneuver (0 = unlocked)

CARD 08 Stability Analysis and Miscellaneous Logic (14I5 format)

IPL (29) Switch for fuselage coupling in STAB (0 = uncoupled)
(30) Switch for pylon degrees of freedom in STAB (0 = off)
(31) Switch for rotor degrees of freedom in STAB (0 = off)
(32) Switch for rebalancing rotors in STAB when IPL(31) = 0 (0 = rebalance)
(33) Output control for STAB matrices (0 = print only)
(34) Output selector for STAB diagnostics (0 = off)
(35)
(36) Print control for input data (0 = print all input data)
(37) Switch for reading Rotor Wake at Surfaces (RWAS) tables (0 = off)
(38)
(39)
(40)
(41) Rotor fold indicator (0 = unfolded)
(42) Switch for shifting cg with rotor folding (0 = no shift)

2.3 DATA TABLE GROUP

This group does not have an all-inclusive Group Identification Card; each set of tables has its own. Hence, CARD 10 is not included in the deck.

2.3.1 Airfoil Data Table Sets (omit if IPL(2) = 0)

2.3.1.1 Airfoil Data Table Set No. 1 (include only if IPL(2) $\geq$ 1)

CARD 11 Table Identification Card

CARD 11/A Title and Control Card (7A4, A2, 6I2 format)

Col	1→30	Alphanumeric title for the sets of tables
	31→32	NXL, number of Mach number entries in C_L table
	33→34	NZL, number of angle of attack entries in C_L table
	35→36	NXD, number of Mach number entries in C_D table
	37→38	NZD, number of angle of attack entries in C_D table
	39→40	NXM, number of Mach number entries in C_M table
	41→42	NXM, number of angle of attack entries in C_M table

2.3.1.1.1 Lift Coefficient Table

CARD 11/B1 Mach number entries for C_L table (7X, 9F7.0 format)

Col	8→14	M_1, lowest Mach number
	15→21	M_2, next highest Mach number
	22→28	M_3, next highest Mach number
	29→35	M_4, next highest Mach number
	36→42	M_5, next highest Mach number
	43→49	M_6, next highest Mach number
	50→56	M_7, next highest Mach number
	57→63	M_8, next highest Mach number
	64→70	M_9, next highest Mach number

CARDS 11/B2 Additional Mach Numbers (include only if NXL $\geq$ 10)

Same format as CARD 11/B1; include additional cards as required with the same format to input NXL values of Mach numbers

Card Sets for Angle of Attack/Lift Coefficient Data

NZL card sets follow the Mach number entries. Each set has the following format:

First Card:

Col	1→7	Angle of attack, degrees
	8→14	Coefficient at $M = M_1$
	15→21	Coefficient at $M = M_2$
	22→28	Coefficient at $M = M_3$
	29→35	Coefficient at $M = M_4$
	36→42	Coefficient at $M = M_5$
	43→49	Coefficient at $M = M_6$
	50→56	Coefficient at $M = M_7$
	57→63	Coefficient at $M = M_8$
	64→70	Coefficient at $M = M_9$

Second Card: (include only if NZL $\geq$ 10)

Col	1→7	(Not used)
	8→14	Coefficient at $M = M_{10}$
	15→21	Coefficient at $M = M_{11}$
	22→28	Coefficient at $M = M_{12}$
	29→35	Coefficient at $M = M_{13}$
	36→42	Coefficient at $M = M_{14}$
	43→49	Coefficient at $M = M_{15}$
	50→56	Coefficient at $M = M_{16}$
	57→63	Coefficient at $M = M_{17}$
	64→70	Coefficient at $M = M_{18}$

Third Card: (include only if NZL $\geq$ 19)

Same format as Second Card; include additional cards as required to input NXL values of C_L.

2.3.1.1.2 Drag Coefficient Table

CARDS 11/C1, 11/C2, etc. Mach number entries

Same format as CARDS 11/B1, 11/B2, etc; NXD entries required

Card Sets for Angle of Attack/Drag Coefficient Data

NZD card sets required; same format as for lift coefficient card sets; NXD values of C_D required for each card set

2.3.1.1.3 Pitching Moment Coefficient Table

CARDS 11/D1, 11/D2, etc. 11/D1, 11/D2, etc.

Same format as lift and drag coefficient tables; NXM Mach number entries required; NZM card sets required with NXM values of C_D for each card set.

2.3.1.2 Airfoil Data Table Set No. 2 (include only if IPL(2) $\geq$ 2)

CARD 12 Table Identification Card

CARD 12/A Title and Control Card

CARDS 12/B1 Lift Coefficient Table

CARDS 12/C1 Drag Coefficient Table

CARDS 12/D1 Pitching Moment Coefficient Table

2.3.1.3 Airfoil Data Table Set No. 3 (include only if IPL(2) $\geq$ 3)

CARD 13 Table Identification Card

CARD 13A Title and Control Card

CARDS 13/B1 Lift Coefficient Table

CARDS 13/C1 Drag Coefficient Table

CARDS 13/D1 Pitching Moment Coefficient Table

2.3.1.4 Airfoil Data Table Set No. 4 (include only if IPL(2) $\geq$ 4)

CARD 14 Table Identification Card

CARD 14A Title and Control Card

CARDS 14/B1 Lift Coefficient Table

CARDS 14/C1 Drag Coefficient Table

CARDS 14/D1 Pitching Moment Coefficient Table

2.3.1.5 <u>Airfoil Data Table Set No. 5</u> (include only if IPL(2) = 5)

CARD 15 Table Identification Card

CARD 15A Title and Control Card

CARDS 15/B1 Lift Coefficient Table

CARDS 15/C1 Drag Coefficient Table

CARDS 15/D1 Pitching Moment Coefficient Table

Note: A set of tables for an NACA 0012 airfoil is compiled within the program and stored in the region allocated for Data Table Set No. 5. If IPL(2) = 5, the fifth set of tables input overlays this set of internal 0012 tables.

2.3.2 Rotor Aeroelastic Blade Data Blocks

2.3.2.1 Main Rotor Data Block (omit entire data block if IPL(3) = 0)

CARD 16 Main Rotor Aeroelastic Blade Data Block Identification Card

2.3.2.1.1 Average Weight of Blade Segments

CARD 16/A1

XMW	(1)	Blade Segment No. 1 (root)	(lb/in.)
	(2)	Blade Segment No. 2	(lb/in.)
	(3)	Blade Segment No. 3	(lb/in.)
	(4)	Blade Segment No. 4	(lb/in.)
	(5)	Blade Segment No. 5	(lb/in.)
	(6)	Blade Segment No. 6	(lb/in.)
	(7)	Blade Segment No. 7	(lb/in.)

CARD 16/A2

XMW	(8)	Blade Segment No. 8	(lb/in.)
	(9)	Blade Segment No. 9	(lb/in.)
	(10)	Blade Segment No. 10	(lb/in.)
	(11)	Blade Segment No. 11	(lb/in.)
	(12)	Blade Segment No. 12	(lb/in.)
	(13)	Blade Segment No. 13	(lb/in.)
	(14)	Blade Segment No. 14	(lb/in.)

CARD 16/A3

XMW	(15)	Blade Segment No. 15	(lb/in.)
	(16)	Blade Segment No. 16	(lb/in.)
	(17)	Blade Segment No. 17	(lb/in.)
	(18)	Blade Segment No. 18	(lb/in.)
	(19)	Blade Segment No. 19	(lb/in.)
	(20)	Blade Segment No. 20 (tip)	(lb/in.)
	(21)	Tip Weight	(lb)

2.3.2.1.2 Average Beamwise Mass Moment of Inertia of Blade Segments

CARD 16/B1

XMW	(22)	Blade Segment No. 1 (root)	(in.-lb-sec^2/in.)
	(23)	Blade Segment No. 2	(in.-lb sec^2/in.)
	(24)	Blade Segment No. 3	(in.-lb-sec^2/in.)
	(25)	Blade Segment No. 4	(in.-lb·sec^2/in.)
	(26)	Blade Segment No. 5	(in.-lb-sec^2/in.)
	(27)	Blade Segment No. 6	(in.-lb-sec^2/in.)
	(28)	Blade Segment No. 7	(in.-lb-sec^2/in.)

CARD 16/B2

XMW	(29)	Blade Segment No. 8	(in.-lb-sec^2/in.)
	(30)	Blade Segment No. 9	(in.-lb-sec^2/in.)
	(31)	Blade Segment No. 10	(in.-lb-sec^2/in.)
	(32)	Blade Segment No. 11	(in.-lb-sec^2/in.)
	(33)	Blade Segment No. 12	(in.-lb-sec^2/in.)
	(34)	Blade Segment No. 13	(in.-lb-sec^2/in.)
	(35)	Blade Segment No. 14	(in.-lb-sec^2/in.)

CARD 16/B3

XMW	(36)	Blade Segment No. 15	(in.-lb-sec^2/in.)
	(37)	Blade Segment No. 16	(in.-lb-sec^2/in.)
	(38)	Blade Segment No. 17	(in.-lb-sec^2/in.)
	(39)	Blade Segment No. 18	(in.-lb-sec^2/in.)
	(40)	Blade Segment No. 19	(in.-lb-sec^2/in.)
	(41)	Blade Segment No. 20 (tip)	(in.-lb-sec^2/in.)
	(42)		

2.3.2.1.3 <u>Average Chordwise Mass Moment of Inertia of Blade Segment</u>

CARD 16/C1

XMW	(43)	Blade Segment No. 1 (root)	(in.-lb-sec^2/in.)
	(44)	Blade Segment No. 2	(in.-lb-sec^2/in.)
	(45)	Blade Segment No. 3	(in.-lb-sec^2/in.)
	(46)	Blade Segment No. 4	(in.-lb-sec^2/in.)
	(47)	Blade Segment No. 5	(in.-lb-sec^2/in.)
	(48)	Blade Segment No. 6	(in.-lb-sec^2/in.)
	(49)	Blade Segment No. 7	(in.-lb-sec^2/in.)

CARD 16/C2

XMW	(50)	Blade Segment No. 8	(in.-lb-sec^2/in.)
	(51)	Blade Segment No. 9	(in.-lb-sec^2/in.)
	(52)	Blade Segment No. 10	(in.-lb-sec^2/in.)
	(53)	Blade Segment No. 11	(in.-lb-sec^2/in.)
	(54)	Blade Segment No. 12	(in.-lb-sec^2/in.)
	(55)	Blade Segment No. 13	(in.-lb-sec^2/in.)
	(56)	Blade Segment No. 14	(in.-lb-sec^2/in.)

CARD 16/C3

XMW	(57)	Blade Segment No. 15	(in.-lb-sec^2/in.)
	(58)	Blade Segment No. 16	(in.-lb-sec^2/in.)
	(59)	Blade Segment No. 17	(in.-lb-sec^2/in.)
	(60)	Blade Segment No. 18	(in.-lb-sec^2/in.)
	(61)	Blade Segment No. 19	(in.-lb-sec^2/in.)
	(62)	Blade Segment No. 20 (tip)	(in.-lb-sec^2/in.)
	(63)		

2.3.2.1.4 Rotor Mode Shapes

Format for first eleven cards of each set of mode shape data is 6F10.0; the twelfth (last) card of each set has a 6F10.0, 2F5.0 format.

2.3.2.1.4.1 Mode 1

CARD 16/D1

XMRMS	(1)	Out-of-plane component at Station No. 0 (root)	(ft)
	(2)	Inplane component at Station No. 0	(ft)
	(3)	Torsional component at Station No. 0	(deg)
	(4)	Out-of-plane component at Station No. 1	(ft)
	(5)	Inplane component at Station No. 1	(ft)
	(6)	Torsional component at Station No. 1	(deg)

CARD 16/D2

XMRMS	(7)	Out-of-plane component at Station No. 2	(ft)
	(8)	Inplane component at Station No. 2	(ft)
	(9)	Torsional component at Station No. 2	(deg)
	(10)	Out-of-plane component at Station No. 3	(ft)
	(11)	Inplane component at Station No. 3	(ft)
	(12)	Torsional component at Station No. 3	(deg)

CARD 16/D3 Component data for Stations No. 4 and 5

CARD 16/D4 Component data for Stations No. 6 and 7

CARD 16/D5 Component data for Stations No. 8 and 9

CARD 16/D6 Component data for Stations No. 10 and 11

CARD 16/D7 Component data for Stations No. 12 and 13

CARD 16/D8 Component data for Stations No. 14 and 15

CARD 16/D9 Component data for Stations No. 16 and 17

CARD 16/D10 Component data for Stations No. 18 and 19

CARD 16/D11

XMRMS	(61)	Out-of-plane component at Station No. 20 (tip)	(ft)
	(62)	Inplane component at Station No. 20	(ft)
	(63)	Torsional component at Station No. 20	(deg)
	(64)	Natural frequency of Mode 1 at baseline rpm and pitch angle	(/rev)
	(65)	Mode type indicator	
	(66)	Modal damping ratio	

CARD 16/D12

XMRMS	(67)	Natural frequency at low rpm and low pitch angle	(rpm)
	(68)	Natural frequency at low rpm and high pitch angle	(rpm)
	(69)	Natural frequency at high rpm and low pitch angle	(rpm)
	(70)	Natural frequency at high rpm and high pitch angle	(rpm)
	(71)	Difference between reference pitch angle and high or low value	(deg)
	(72)	Difference between reference rpm and either high or low value	(rpm)
	(73)	Reference pitch angle (in Col. 61→65)	(deg)
	(74)	Reference rpm value (in Col. 66→70)	(rpm)

2.3.2.1.4.2 <u>Modes 2 through 6</u>

CARDS 16/E1 through 16/E12 (include only if IPL(3) $\geq$ 2)

XMRMS(75) → XMRMS(148) Mode 2 data; same input sequence and format as Mode 1.

CARDS 16/F1 through 16/F12 (include only if IPL(3) $\geq$ 3)

XMRMS(149) → XMRMS(222) Mode 3 data; same input sequence and format as Mode 1.

CARDS 16/G1 through 16/G12 (include only if IPL(3) $\geq$ 4)

XMRMS(223) → XMRMS(296) Mode 4 data; same input sequence and format as Mode 1.

CARDS 16/H1 through 16/H12 (include only if IPL(3) $\geq$ 5)

XMRMS(297) → XMRMS(370) Mode 5 data; same input sequence and format as Mode 1.

CARDS 16/I1 through 16/I12 (include only if IPI(3) = 6)

XMRMS(371) → XMRMS(444) Mode 6 data; same input sequence and format as Mode 1.

2.3.2.2 <u>Tail Rotor Data Block</u> (omit entire block if IPL(4) = 0)

This data block uses the same input format and sequence as the main rotor data block discussed in the preceding section.

CARD 17 Tail Rotor Aeroelastic Blade Data Block Identification Card

CARD 17/A1 CARD 17/A2 CARD 17/A3	XTW(1) → XTW(20) XTW(21)	Average blade weight distribution (root to tip) Tip weight	(lb/in.) (lb)
CARD 17/B1 CARD 17/B2 CARD 17/B3	XTW(22) → XTW(41)	Average blade beamwise mass moment of inertia distribution (root to tip)	(in.-lb-sec^2/in.)
CARD 17/C1 CARD 17/C2 CARD 17/C3	XTW(43) → XTW(62)	Average blade chordwise mass moment of inertia distribution (root to tip)	(in.-lb-sec^2/in.)

CARDS 17/D1 through 17/D12

XTRMS(1) → XTRMS(74) Mode 1 data

CARDS 17/E1 through 17/E12 (include only if IPL(4) $\geq$ 2)

XTRMS(75) → XTRMS(148) Mode 2 data

CARDS 17/F1 through 17/F12 (include only if IPL(4) $\geq$ 3)

XTRMS(149) → XTRMS(222) Mode 3 data

CARDS 17/G1 through 17/G12 (include only if IPL(4) $\geq$ 4)

XTRMS(223) → XTRMS(296) Mode 4 data

CARDS 17/H1 through 17/H12 (include only if IPL(4) $\geq$ 5)

XTRMS(297) → XTRMS(370) Mode 5 data

CARDS 17/I1 through 17/I12 (include only if IPL(4) = 6)

XTRMS(371) → XTRMS(444) Mode 6 data

2.3.3 Rotor-Induced Velocity Distribution Tables (omit if IPL(5) = 0)

A rotor-induced velocity distribution (RIVD) table may be input for each rotor. If a table is not input for a particular rotor, the distribution is computed from the equation in Section 3.26.3

2.3.3.1 Main Rotor Table (include only if IPL(5) = 1 or 3)

CARD 18 Main Rotor RIVD Table Identification Card

CARD 18/A Title and Control Card (8A4, 8X, 4I3 format)

Col	1→32	Alphanumeric title for table
	41→43	NMU, Number of advance ratios ($1 \leq NMU \leq 10$)
	44→46	NLM, Number of inflow ratios ($1 \leq NLM \leq 5$)
	47→49	NRS, Number of radial stations (= 4, 5, 10, or 20)
	50→52	NHH, Order of highest harmonic ($0 \leq NHH \leq 16$)

2.3.3.1.1 Advance Ratio Inputs

CARD 18/B1 (include only if NMU $\geq$ 2; 7F10.0 format)

WKMU (1) Lowest advance ratio
(2) Next highest advance ratio
(3) Next highest advance ratio
(4) Next highest advance ratio
(5) Next highest advance ratio
(6) Next highest advance ratio
(7) Next highest advance ratio

CARD 18/B2 (include only if NMU $\geq$ 8; 3F10.0 format)

WKMU (8) Next highest advance ratio
(9) Next highest advance ratio
(10) Next highest advance ratio

2.3.3.1.2 Inflow Ratio Inputs

CARD 18/C (include only if NLM $\geq$ 2; 5F10.0 format)

WKLM (1) Lowest inflow ratio
(2) Next highest inflow ratio
(3) Next highest inflow ratio
(4) Next highest inflow ratio
(5) Next highest inflow ratio

NOTE: Include card(s) for advance ratio inputs if and only if NMU $\geq$ 2; include card for inflow ratio inputs if and only if NLM $\geq$ 2; i.e., if NMU = 1 and/or NLM = 1 for a table, that table is independent of advance ratio and/or inflow ratio, respectively.

2.3.3.1.3 Sets of Coefficients (NMU*NLM*NRS sets required)

Each set of coefficients corresponds to a specific combination of advance ratio, inflow ratio, and radial stations (WKMU(I), WKLM(J), and WKRS(K) respectively). See Figure 2-2 for input sequence of the sets. Each set of coefficients starts on a new card and consists of one to six cards in the following format:

First Card (7F10.0 format)

Col	1→10	Constant (zeroth harmonic)
	11→20	Sine component of first harmonic
	21→30	Cosine component of first harmonic
	31→40	Sine component of second harmonic
	41→50	Cosine component of second harmonic
	51→60	Sine component of third harmonic
	61→70	Cosine component of third harmonic

Second Card (include only if NHH $\geq$ 4; 10X, 6F10.0 format)

Col	1→10	(Not used)
	11→20	Sine component of fourth harmonic
	21→30	Cosine component of fourth harmonic
	31→40	Sine component of fifth harmonic
	41→50	Cosine component of fifth harmonic
	51→60	Sine component of sixth harmonic
	61→70	Cosine component of sixth harmonic

Third Card (include only if NHH $\geq$ 7)

Sine and cosine components for seventh, eighth and ninth harmonics; same format as second card

Fourth Card (include only if NHH $\geq$ 10)

Sine and cosine components for tenth, eleventh and twelfth harmonics; same format as second card

Fifth Card (include only if NHH $\geq$ 13)

Sine and cosine components for thirteenth, fourteenth and fifteenth harmonics; same format as second card

Sixth Card (include only if NHN = 16)

Col	1→10	(Not used)
Col	11→20	Sine component of sixteenth harmonic
Col	21→30	Cosine component of sixteenth harmonic
Col	31→70	(Not used)

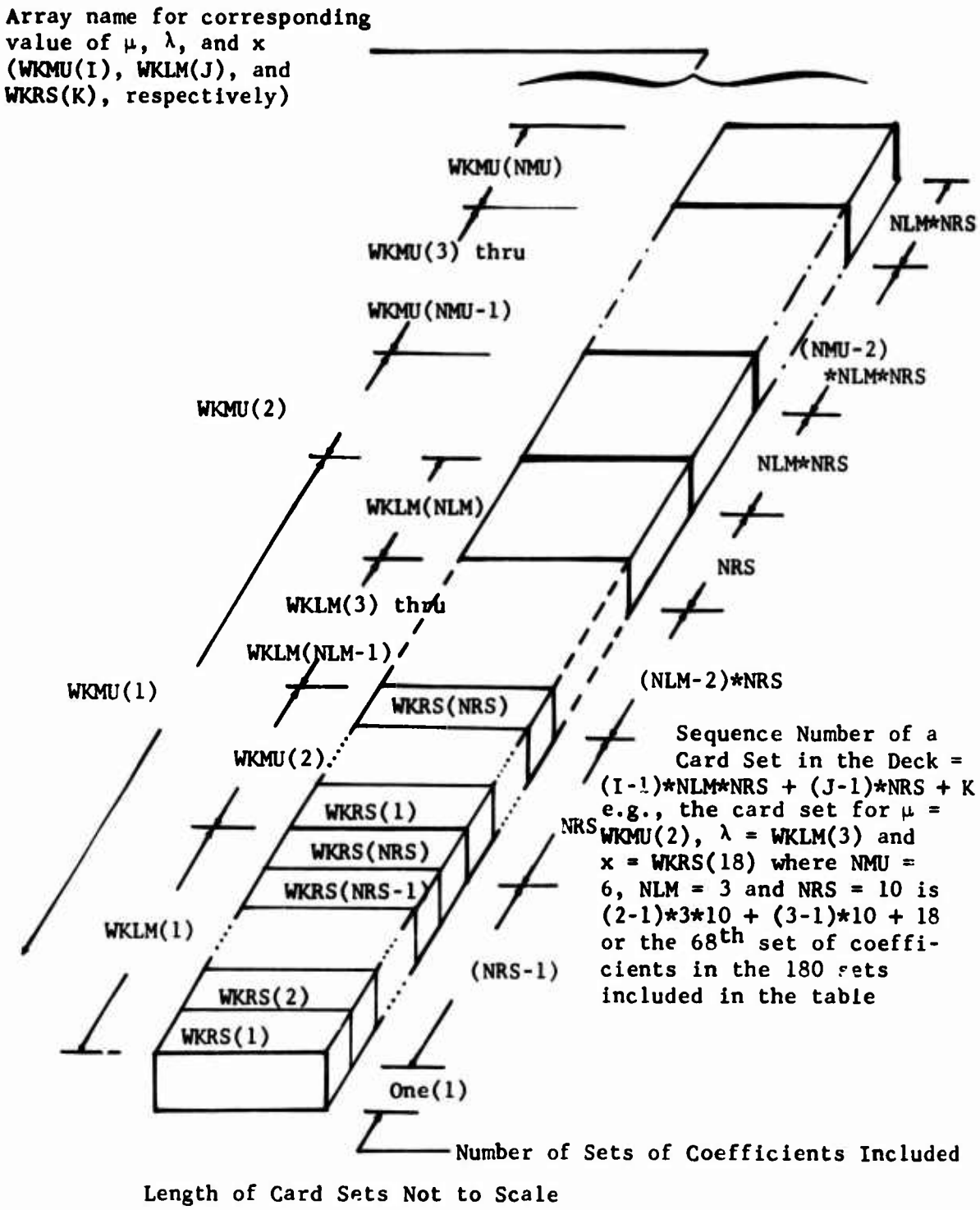

Figure 2-2. Schematic Diagram of Card Deck for RIVD Table.

2.3.3.2 <u>Tail Rotor Table</u> (include only if IPL(5) = 2 or 3)

Format for this table is the same as for the Main Rotor Table.

CARD 19	Tail Rotor RIVD Table Identification Card
CARD 19/A	Title and Control Card
CARD 19/B1 19/B2	Advance ratio inputs
CARD 19/C	Inflow ratio inputs

Sets of Coefficients

NMU*NLM*NRS sets required; maximum of 6 cards per set

2.3.4 Tables for Rotor-Induced Velocity Acting at Aerodynamic Surfaces (omit if IPL(37) = 0)

If IPL(37) $\neq$ 0, exactly IPL(37) tables must be input. The format for each table is identical to each other and similar to the RIVD tables discussed in Section 2.3.3. The format for an example table follows:

First Card: Table Identification Card

Second Card: Title and Control Card (8A4, 8X, 3I3 format)

Col 1→32	Alphanumeric title for table
41→43	NMU, Number of advance ratios ($1 \leq NMU \leq 10$)
44→46	NLM, Number of inflow ratios ($1 \leq NLM \leq 5$)
47→49	NHH, Order of highest harmonic ($0 \leq NHH \leq 7$)

Next Card(s): Advance ratio inputs; 7F10.0 format; include if and only if NMU > 2; use one card if $2 \leq NMU \leq 7$; continue on a second card if $NMU \geq 8$.

Next Card: Inflow ratio inputs; 5F10.0 format; include if and only if $NLM \geq 2$.

Next Cards: Set of coefficients; NMU*NLM sets required; one to three cards for each set; same format as for sets of coefficients in RIVD Tables (see Section 2.3.3.1.3); see Figure 2-3 for input sequence of the sets.

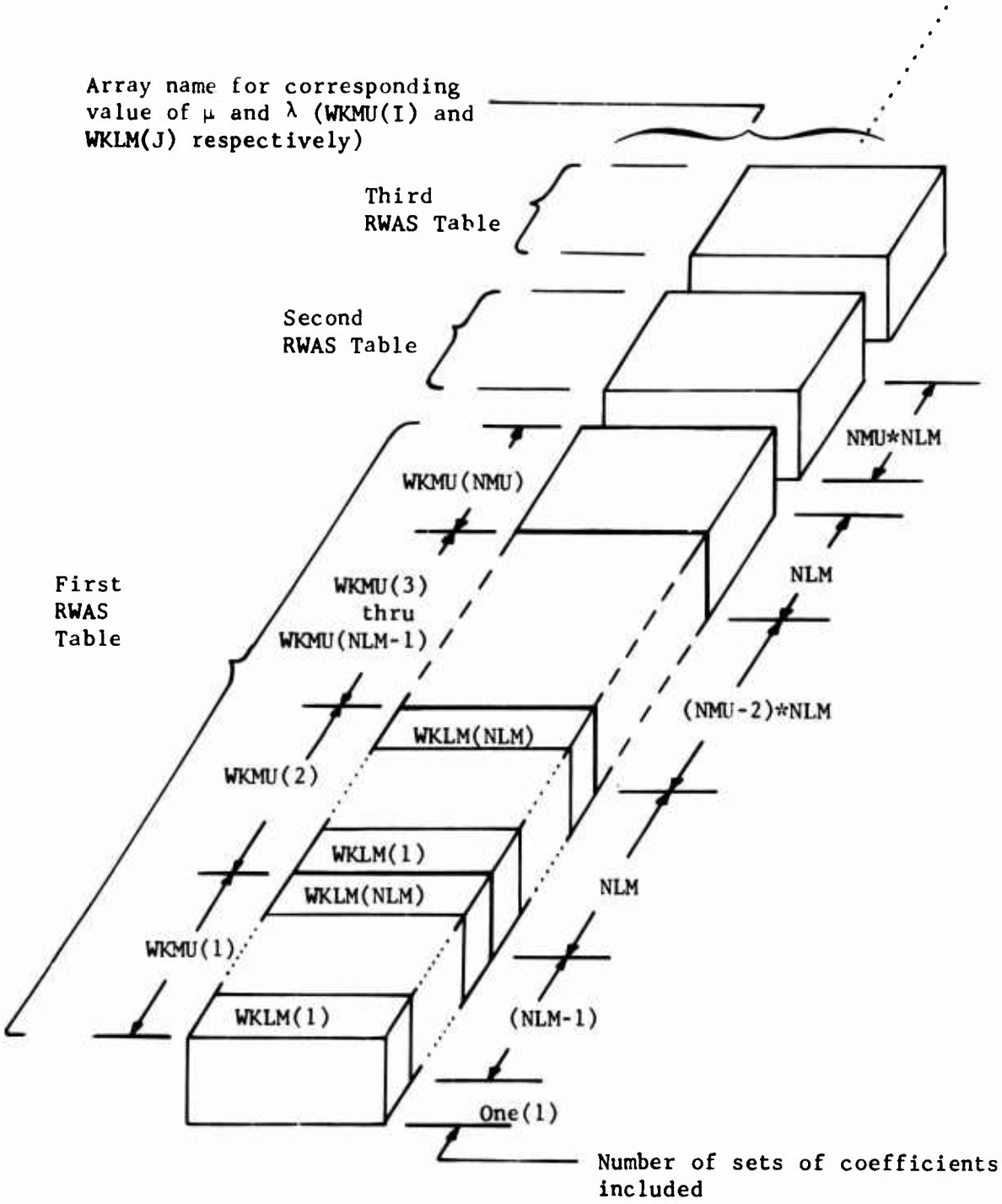

Length of Card Sets Not to Scale

Figure 2-3. Schematic Diagram of Card Deck for a Set of RWAS Tables.

2.4 FUSELAGE GROUP (include only if IPL(1) = 0)

CARD 20 Fuselage Group Identification Card

2.4.1 Basic Inputs

CARD 21

XFS	(1)	Gross weight		(lb)
	(2)	Stationline	Location of fuselage data reference point	(in.)
	(3)	Buttline		(in.)
	(4)	Waterline		(in.)
	(5)	Stationline	Location of center of gravity	(in.)
	(6)	Buttline		(in.)
	(7)	Waterline		(in.)

CARD 22

XFS	(8)	Aircraft rolling inertia, I_{xx}	(slug-ft^2)
	(9)	Aircraft pitching inertia, I_{yy}	(slug-ft^2)
	(10)	Aircraft yawing inertia, I_{zz}	(slug-ft^2)
	(11)	Aircraft product of inertia, I_{xz}	(slug-ft^2)
	(12)	Force and moment equation use indicator, LGF	
	(13)	Phasing Angle (Nominal/Phasing)	(deg)
	(14)	Phasing Angle (High/Phasing)	(deg)

2.4.2 Aerodynamic Inputs (Wind Axis)

Cards 23 through 2E contain the coefficients for the High Angle and Nominal Angle Equations. The asterisk (*) indicates the input is considered a necessary one; see Section 3.4.

2.4.2.1 Coefficients for Lift Equations

CARD 23

XFS	*(15)	L/q at $\psi_w = \theta_w = 0^\circ$ (Fwd. Flt.)	(ft^2)
	(16)	L/q at $\psi_w = 180^\circ$, $\theta_w = 0^\circ$ (Rwd. Flt.)	(ft^2)
	(17)	Approx. peak L/q for $0^\circ \leq \theta_w \leq 90^\circ$, $\psi_w = 0^\circ$	(ft^2)
	(18)	Value of θ_w for XFS(17)	(deg)
	(19)	L/q at $\psi_w = 0^\circ$, $\theta_w = 90^\circ$ (Vert. Flt.)	(ft^2)
	(20)	L/q at $\psi_w = 90^\circ$, $\theta_w = 0^\circ$ (Sideward Flt.)	(ft^2)
	(21)	$\partial(L/q)/\partial\psi_w$	(ft^2/deg)

CARD 24

XFS	(22)	$\partial(L/q)/\partial(\psi_w^2)$	(ft^2/deg^2)
	*(23)	$\partial(L/q)/\partial\theta_w$; lift curve slope at $\psi_w = 0^o$	(ft^2/deg)
	(24)	$\partial(\partial(L/q)/\partial\psi_w)\partial\theta_w$	(ft^2/deg^2)
	(25)	$\partial(\partial(L/q)/\partial(\psi_w^2))/\partial\theta_w)$	(ft^2/deg^3)
	(26)	$\partial(L/q)/\partial(\theta_w^2)$	(ft^2/deg^2)
	(27)	$\partial(\partial(L/q)/\partial\psi_w)/\partial(\theta_w^2)$	(ft^2/deg^3)
	(28)	$\partial(L/q)/\partial(\theta^3_w)$	(ft^2/deg^3)

2.4.2.2 Coefficients for Drag Equations

CARD 25

XFS	*(29)	D/q at $\psi_w = \theta_w = 0^o$ (Fwd. Flt)	(ft^2)
	(30)	D/q at $\psi_w = 180^o$, $\theta_w = 0^o$ (Rwd. Flt)	(ft^2)
	(31)	D/q at $\psi_w = 90^o$, $\theta_w = 0^o$ (Sideward Flt)	(ft^2)
	(32)	D/q at $\theta_w = -90^o$ (Ascending Vertical Flt)	(ft^2)
	(33)	D/q at $\theta_w = +90^o$ (Descending Vertical Flt)	(ft^2)
	(34)		
	(35)	$\partial(D/q)/\partial\psi_w$	(ft^2/deg)

CARD 26

XFS	*(36)	$\partial(D/q)/\partial(\psi_w^2)$; variation of drag with ψ_w^2 at $\theta_w = 0^o$	(ft^2/deg^2)
	*(37)	$\partial(D/q)/\partial\theta_w$; variation of drag with θ_w at $\psi_w = 0^o$	(ft^2/deg)
	(38)	$\partial(\partial(D/q)/\partial\psi_w)/\partial\theta_w$	(ft^2/deg^2)
	(39)	$\partial(\partial(D/q)/\partial(\psi_w^2))/\partial\theta_w$	(ft^2/deg^3)
	*(40)	$\partial(D/q)/\partial(\theta_w^2)$; variation of drag with θ_w^2 at $\psi_w = 0^o$	(ft^2/deg^2)
	(41)	$\partial(\partial(D/q)/\partial\psi_w)/\partial(\theta^2_w)$	(ft^2/deg^3)
	(42)	$\partial(D/q)/\partial(\theta_w^3)$	(ft^2/deg^3)

2.4.2.3 Coefficients for Pitching Moment Equations

CARD 27

XFS	*(43)	M/q at $\psi_w = \theta_w = 0^\circ$ (Fwd Flt)	(ft^3)
	(44)	M/q at $\psi_w = 180^\circ$, $\theta_w = 0^\circ$ (Rwd. Flt)	(ft^3)
	(45)	Approx. peak M/q for $0^\circ \leq \theta_w \leq 90^\circ$, $\psi_w = 0^\circ$	(ft^3)
	(46)	Value of θ_w for XFS(45)	(deg)
	(47)	M/q at $\psi_w = 0^\circ$, $\theta_w = 90^\circ$ (Vertical Flt)	(ft^3)
	(48)	M/q at $\psi_w = 90^\circ$, $\theta_w = 0^\circ$ (Sideward Flt)	(ft^3)
	(49)	$\partial(M/q)/\partial\psi_w$	(ft^3/deg)

CARD 28

XFS	(50)	$\partial(M/q)/\partial(\psi_w^2)$	(ft^3/deg^2)
	*(51)	$\partial(M/q)/\partial\theta_w$; static longitudinal stability	(ft^3/deg)
	(52)	$\partial(\partial(M/q)/\partial\psi_w)\partial\theta_w$	(ft^3/deg^2)
	(53)	$\partial(\partial(M/q)/\partial(\psi_w^2))/\partial\theta_w$	(ft^3/deg^3)
	(54)	$\partial(M/q)/\partial(\theta_w^2)$	(ft^3/deg^2)
	(55)	$\partial(\partial(M/q)/\partial\psi_w)/\partial(\theta_w^2)$	(ft^3/deg^3)
	(56)	$\partial(M/q)/\partial(\theta_w^3)$	(ft^3/deg^3)

2.4.2.4 Coefficients for Side Force Equations

CARD 29

XFS	(57)	Y/q at $\psi_w = 90^\circ$, $\theta_w = 0^\circ$ (Sideward Flt)	(ft^2)
	(58)	Approx. peak Y/q for $0 \leq \psi_w \leq 90^\circ$, $\theta_w = 0^\circ$	(ft^2)
	(59)	Value of ψ_w for XFS(58)	(deg)
	(60)	Y/q at $\psi_w = \theta_w = 0^\circ$ (Fwd Flt)	(ft^2)
	(61)	$\partial(Y/q)/\partial\theta_w$	(ft^2/deg)
	(62)	$\partial(Y/q)/\partial(\theta_w^2)$	(ft^2/deg^2)
	(63)	$\partial(Y/q)/\partial(\theta_w^3)$	(ft^2/deg^3)

CARD 2A

XFS	*(64)	$\partial(Y/q)/\partial\psi_w$; slope of Y vs. ψ_w at $\theta_w = 0^\circ$	(ft^2/deg)
	(65)	$\partial(\partial(Y/q)/\partial\theta_w)/\partial\psi_w$	(ft^2/deg^2)
	(66)	$\partial(\partial(Y/q)/\partial(\theta_w^2))/\partial\psi_w$	(ft^2/deg^3)
	(67)	$\partial(Y/q)/\partial(\psi_w^2)$	(ft^2/deg^2)
	(68)	$\partial(\partial(Y/q)/\partial\theta_w)/\partial(\psi_w^2)$	(ft^2/deg^3)
	(69)	$\partial(Y/q)/\partial(\psi_w^3)$	(ft^2/deg^3)
	(70)	$\partial(\partial(Y/q)/\partial\theta_w)/\partial(\psi_w^3)$	(ft^2/deg^4)

2.4.2.5 Coefficients for Rolling Moment Equations

CARD 2B

XFS	(71)	$1/q$ at $\psi_w = 90^\circ$, $\theta_w = 0^\circ$ (Sideward Flt)	(ft^3)
	(72)	Approx. peak $1/q$ for $0 \leq \psi_w \leq 90^\circ$, $\theta_w = 0^\circ$	(ft^3)
	(73)	Value of ψ_w for XFS(72)	(deg)
	(74)	$1/q$ at $\psi_w = \theta_w = 0^\circ$ (Fwd Flt)	(ft^3)
	(75)	$\partial(1/q)/\partial\theta_w$	(ft^3/deg)
	(76)	$\partial(1/q)/\partial(\theta_w^2)$	(ft^3/deg^2)
	(77)	$\partial(1/q)/\partial(\theta_w^3)$	(ft^3/deg^3)

CARD 2C

XFS	*(78)	$\partial(1/q)/\partial\psi_w$; slope of RM curve for ψ_w at $\theta_w = 0^\circ$	(ft^3/deg)
	(79)	$\partial(\partial(1/q)/\partial\theta_w)/\partial\psi_w$	(ft^3/deg^2)
	(80)	$\partial(\partial(1/q)/\partial(\theta_w^2)/\partial\psi_w$	(ft^3/deg^3)
	(81)	$\partial(1/q)/\partial(\psi_w^2)$	(ft^3/deg^2)
	(82)	$\partial(\partial(1/q)/\partial\theta_w)/\partial(\psi_w^2)$	(ft^3/deg^3)
	(83)	$\partial(1/q)/\partial(\psi_w^3)$	(ft^3/deg^3)
	(84)	$\partial(\partial(1/q)/\partial\theta_w)/\partial(\psi_w^3)$	(ft^3/deg^4)

2.4.2.6 Coefficients for Yawing Moment Equations

CARD 2D

XFS	(85)	N/q at $\psi_w = 90^o$, $\theta_w = 0^o$ (Sideward Flt.)	(ft^3)
	(86)	Approx. peak N/q for $0 \leq \psi_w \leq 90^o$, $\theta_w = 0^o$	(ft^3)
	(87)	Value of ψ_w for XFS(86)	(deg)
	(88)	N/q at $\psi_w = \theta_w = 0^o$ (Fwd Flt)	(ft^3)
	(89)	$\partial(N/q)/\partial\theta_w$	(ft^3/deg)
	(90)	$\partial(N/q)/\partial(\theta_w^2)$	(ft^3/deg^2)
	(91)	$\partial(N/q)/\partial(\theta_w^3)$	(ft^3/deg^3)

CARD 2E

XFS	*(92)	$\partial(N/q)/\partial\psi_w$; Slope of YM curve for ψ_w at $\theta_w = 0^o$	(ft^3/deg)
	(93)	$\partial(\partial(N/q)/\partial\theta_w)/\partial\psi_w$	(ft^3/deg^2)
	(94)	$\partial(\partial(N/q)/\partial(\theta_w^2))/\partial\psi_w$	(ft^3/deg^3)
	(95)	$\partial(N/q)/\partial(\psi_w^2)$	(ft^3/deg^2)
	(96)	$\partial(\partial(N/q)/\partial\theta_w)/\partial(\psi_w^2)$	(ft^3/deg^3)
	(97)	$\partial(N/q)/\partial(\psi_w^3)$	(ft^3/deg^3)
	(98)	$\partial(\partial(N/q)/\partial\theta_w)/\partial(\psi_w^3)$	(ft^3/deg^4)

2.5 ROTOR AERODYNAMIC GROUP (omit only if IPL(6) = 0 and IPL(7) = 3)

CARD 30 Rotor Aerodynamic Group Identification Card

2.5.1 Rotor Airfoil Aerodynamic (RAA) Subgroup No. 1

CARD 31A

YRR	(1,1)	Drag divergence Mach number for $\alpha = 0$	
	(2,1)	Mach number for lower boundary of supersonic region	
	(3,1)	Maximum C_L, normal flow, M = 0	
	(4,1)	Coefficients of Mach number in maximum C_L equation, normal flow	
	(5,1)		
	(6,1)		
	(7,1)	Maximum C_L, reversed flow, M = 0	

CARD 31B

YRR	(8,1)	Slope of lift curve for M = 0	(/deg)
	(9,1)	Coefficients of M for lift curve slope in subsonic region	(/deg)
	(10,1)		(/deg)
	(11,1)		(/deg)
	(12,1)	C_D for $\alpha = 0$, M = 0	
	(13,1)	Coefficients of α in nondivergent drag equation	(/deg)
	(14,1)		(/deg^2)

CARD 31C

YRR	(15,1)	Coefficient in supersonic drag equation	
	(16,1)	Maximum nondivergent C_D	
	(17,1)	Thickness/chord ratio	
	(18,1)	Control variable for using data table	
	(19,1)	Drag rise coefficient	(/deg)
	(20,1)	Coefficient of yaw angle in Mach number equation	
	(21,1)	Exponent in Mach number equation for yawed flow	

CARD 31D

YRR	(22,1)	Coefficients of α for Mach Critical in steady C_M equation	(/deg^2)
	(23,1)		(/deg)
	(24,1)		
	(25,1)	C_M for $\alpha = 0$, M = 0	
	(26,1)		
	(27,1)		
	(28,1)	Maximum value of yawed flow angle	(deg)

CARD 31E

YRR	(29,1)	Zero lift line orientation at M = 0, normal flow	(deg)
	(30,1)	Coefficients for zero lift line orientation as a function of Mach number	(deg)
	(31,1)		(deg)
	(32,1)		(deg)
	(33,1)	Switch for UNSAN yawed flow effects (0 = off)	
	(34,1)		
	(35,1)		

2.5.2 <u>RAA Subgroup No. 2</u> (include only if IPL(6) $\geq$ 2)

CARD 32A
CARD 32B
CARD 32C
CARD 32D
CARD 32E

YRR(1,2) → YRR(35,2)

2.5.3 <u>RAA Subgroup No. 3</u> (include only if IPL(6) $\geq$ 3)

CARD 33A
CARD 33B
CARD 33C
CARD 33D
CARD 33E

YRR(1,3) → YRR(35,3)

2.5.4 <u>RAA Subgroup No. 4</u> (include only if IPL(6) $\geq$ 4)

CARD 34A
CARD 34B
CARD 34C
CARD 34D
CARD 34E

YRR(1,4) → YRR(35,4)

2.5.5 <u>RAA Subgroup No. 5</u> (include only if IPL(6) = 5)

CARD 35A
CARD 35B
CARD 35C
CARD 35D
CARD 35E

YRR(1,5) → YRR(35,5)

2.6 MAIN ROTOR GROUP (omit if IPL(7) = 1 or 3)

CARD 40 Main Rotor Group Identification Card

CARD 41

XMR	(1)	Number of blades	
	(2)	Undersling	(in.)
	(3)		
	(4)	Radius	(ft)
	(5)	Chord (ONLY if constant)	(in.)
	(6)	Total twist (ONLY if linear)	(deg)
	(7)	Flapping stop location	(deg)

CARD 42

XMR	(8)	Stationline } Location of mast pivot	(in.)
	(9)	Buttline } point for mast tilt and	(in.)
	(10)	Waterline } conversion maneuvers	(in.)
	(11)	Blade weight (ignored if IPL(3) $\neq$ 0)	(lb)
	(12)	Blade inertia (ignored if IPL(3) $\neq$ 0)	(slug-ft^2)
	(13)	Rotor to engine gear ratio	(Rotor RPM/Engine RPM)
	(14)		

CARD 43

XMR	(15)	Station number for blade moments (0.0 = hub)	
	(16)	Hub-type indicator (0.0 = gimbaled)	
	(17)	Flapping stop spring rate	(ft-lb/deg)
	(18)	Flapping spring rate	(ft-lb/deg)
	(19)	Reduced rotor frequency for UNSAN option	(/rev)
	(20)	Lead-lag damper	(lb-sec/ft)
	(21)	Hub extent	(ft)

CARD 44

XMR	(22)	Precone	(deg)
	(23)	Pitch change axis location (0.0 = 25% chord)	(chords)
	(24)	Pitch-flap coupling angle, δ_3	(deg)
	(25)	Drag coefficient for hub	
	(26)		
	(27)	Coefficient for tip-vortex effect (0.0 = off)	
	(28)		

CARD 45

XMR	(29)	Tip sweep angle (+ aft)	(deg)
	(30)	Shift in ac at tip (+ aft)	(in.)
	(31)	Moment arm of pitch-link attach point (+ fwd)	(in.)
	(32)	Distance from hub to pitch-horn attach point	(in.)
	(33)		
	(34)		
	(35)		

CARD 46

XMR	(36)	Rotor nacelle weight	(lb)
	(37)	Stationline } Location of rotor nacelle	(in.)
	(38)	Buttline } center of gravity	(in.)
	(39)	Waterline }	(in.)
	(40)	Rotor nacelle differential flat plate drag area	(ft^2)
	(41)	Distance from mast pivot point to rotor nacelle aerodynamic center	(ft)
	(42)		

CARD 47

XMR	(43)	Control phasing	(deg)
	(44)	F/A mast tilt (+ fwd)	(deg)
	(45)	Lateral mast tilt (+ right)	(deg)
	(46)	Mast length (+ up)	(ft)
	(47)	Incremental torsional inertia of mast	(slug-ft^2)
	(48)	Torsional spring constant of mast	(ft-lb/deg)
	(49)	Torsional damping ratio for mast	

CARD 48 Fore-and-Aft Dynamic Pylon (include only if IPL(8) = 1 or 3)

XMP	(1)	Pylon inertia	(slug-ft^2)
	(2)	Pylon damping	(ft-lb-sec/deg)
	(3)	Pylon spring rate	(ft-lb/deg)
	(4)	Effective length of focused pylon	(ft)
	(5)	F/A cyclic coupling ratio	(deg/deg)
	(6)	Lateral cyclic coupling ratio	(deg/deg)
	(7)	Collective coupling ratio	(deg/deg)

CARD 49 Lateral Dynamic Pylon (include only if IPL(8) = 1 or 3)

XMP	(8)	Pylon inertia	(slug-ft^2)
	(9)	Pylon damping	(ft-lb-sec/deg)
	(10)	Pylon spring rate	(ft-lb/deg)
	(11)	Effective length of focused pylon	(ft)
	(12)	F/A cyclic coupling ratio	(deg/deg)
	(13)	Lateral cyclic coupling ratio	(deg/deg)
	(14)	Collective coupling ratio	(deg/deg)

CARDS 4A, 4B, 4C (include only if XMR(5) = 0.0)

XMC(1) → XMC(20)	Blade chord distribution; Blade Stations No. 1 to 20 (root to tip)	
XMC(21)	Not used	(in.)

CARDS 4D, 4E, 4F (include only if XMR(6) $\geq$ 100.0)

XMT(1) → XMT(20)	Blade twist distribution; Blade Stations No. 1 to 20 (root to tip)	
XMT(21)	Not used	(deg)

CARD 4G (include only if IPL(18) < 0)

IDTABM(1) → IDTABM(20)	Blade airfoil distribution; Blade Stations No. 1 to 20 (root to tip); 20I1 format

2.7 TAIL ROTOR GROUP (omit if IPL(1) ≠ 0 or if IPL(7) = 2 or 3)

CARD 50 Tail Rotor Group Identification Card

CARD 51

XTR	(1)	Number of blades	
	(2)	Undersling	(in.)
	(3)		
	(4)	Radius	(ft)
	(5)	Chord (ONLY if constant)	(in.)
	(6)	Total twist (ONLY if linear)	(deg)
	(7)	Flapping stop location	(deg)

CARD 52

XTR	(8)	Stationline	Location of mast pivot	(in.)
	(9)	Buttline	point for mast tilt and	(in.)
	(10)	Waterline	conversion maneuvers	(in.)
	(11)	Blade weight (ignored if IPL(4) ≠ 0)		(lb)
	(12)	Blade inertia (ignored if IPL(4) ≠ 0)		(slug-ft^2)
	(13)	Rotor to engine gear ratio		(Rotor RPM/Engine RPM)
	(14)			

CARD 53

XTR	(15)	Station Number for blade moments (0.0 = hub)	
	(16)	Hub-type indicator (0.0 = gimbaled)	
	(17)	Flapping stop spring rate	(ft-lb/deg)
	(18)	Flapping spring rate	(ft-lb/deg)
	(19)	Reduced rotor frequency for UNSAN option	(/rev)
	(20)	Lead-lag damper	(lb-sec/ft)
	(21)	Hub extent	(ft)

CARD 54

XTR	(22)	Precone	(deg)
	(23)	Pitch change axis location (0.0 = 25% chord)	(chords)
	(24)	Pitch-flap coupling angle, δ_3	(deg)
	(25)	Drag coefficient for hub	
	(26)		
	(27)	Coefficient for tip vortex effect (0.0 = off)	
	(28)	Sidewash coefficient	(deg/deg)

CARD 55

XTR	(29)	Tip sweep angle (+ aft)	(deg)
	(30)	Shift in aerodynamic center at tip (+ aft)	(in.)
	(31)	Moment arm of pitch-link attach point (+ fwd)	(in.)
	(32)	Distance from hub to pitch-horn attach point	(in.)
	(33)		
	(34)		
	(35)		

CARD 56

XTR	(36)	Rotor nacelle weight	(lb)
	(37)	Stationline } Location of rotor nacelle	(in.)
	(38)	Buttline } center of gravity	(in.)
	(39)	Waterline }	
	(40)	Rotor nacelle differential flat plate drag area	(ft^2)
	(41)	Distance from mast pivot point to rotor nacelle	(ft)
	(42)		

CARD 57

XTR	(43)	Control phasing	(deg)
	(44)	F/A mast tilt (+ fwd)	(deg)
	(45)	Lateral mast tilt (= ±90 for tail rotor)	(deg)
	(46)	Mast length	(ft)
	(47)	Incremental torsional inertia of mast	(slug-ft^2)
	(48)	Torsional spring rate of mast	(ft-lb/deg)
	(49)	Torsional damping ratio of mast	

CARD 58 Fore-and-Aft Dynamic Pylon (include only if IPL(8) = 2 or 3)

XTP	(1)	Pylon inertia	(slug-ft^2)
	(2)	Pylon damping	(ft-lb-sec/deg)
	(3)	Pylon spring rate	(ft-lb/deg)
	(4)	Effective length of focused pylon	(ft)
	(5)	F/A cyclic coupling ratio	(deg/deg)
	(6)	Lateral cyclic coupling ratio	(deg/deg)
	(7)	Collective coupling ratio	(deg/deg)

CARD 59 Lateral Dynamic Pylon (include only if IPL(8) = 2 or 3)

XTP	(8)	Pylon inertia	(slug-ft^2)
	(9)	Pylon damping	(ft-lb-sec/deg)
	(10)	Pylon spring rate	(ft-lb/deg)
	(11)	Effective length of focused pylon	(ft)
	(12)	F/A cyclic coupling ratio	(deg/deg)
	(13)	Lateral cyclic coupling ratio	(deg/deg)
	(14)	Collective coupling ratio	(deg/deg)

CARDS 5A, 5B, 5C (include only if XTR(5) = 0.0)

XTC(1) → XTC(20) Blade chord (root to tip) (in.)

CARDS 5D, 5E, 5F (include only if XTR(6) $\geq$ 100.0)

XTT(1) → XTT(20) Blade twist (root to tip) (deg)

CARD 5G (include only if IPL(19) < 0)

IDTABT(1) → IDTABT(20) Blade airfoil distribution (root to tip); 20I1 format

2.8 WING GROUP (omit if IPL(9) = 0 or IPL(1) ≠ 0)

CARD 60 Wing Group Identification Card

2.8.1 Basic Inputs

CARD 61

XWG	(1)	Wing Area (including carry-through)		(ft^2)
	(2)	Stationline	Location of center of	(in.)
	(3)	Buttline	pressure for right	(in.)
	(4)	Waterline	wing panel	(in.)
	(5)	Incidence angle		(deg)
	(6)	Effective dihedral angle (+ up)		(deg)
	(7)	Sweep angle of quarter chord line (+ aft)		(deg)

CARD 62

XWG	(8)	Geometric aspect ratio	
	(9)	Spanwise efficiency factor	
	(10)	Taper ratio of wing	
	(11)	Coefficient in equation for dynamic pressure reduction at stabilizers due to wing	
	(12)	Dynamic pressure reduction at wing due to fuselage	
	(13)	Coefficient in equation for wing wake centerline deflection	(deg)
	(14)	Control surface (flap) deflection	(deg)

CARD 63

XWG	(15)	Coefficients for change in lift coefficient	(/deg)
	(16)	as a function of control surface deflection	($/deg^2$)
	(17)	Coefficients for change in maximum lift coef-	(/deg)
	(18)	ficient as a function of control surface deflection	($/deg^2$)
	(19)	Coefficients for change in profile drag coef-	(/deg)
	(20)	ficient as a function of control surface deflection	($/deg^2$)
	(21)		

CARD 64

XWG	(22)	Coefficients for change in wing pitching moment as a function of control surface deflection	(/deg)
	(23)		(/deg^2)
	(24)	Coefficients for downwash at the right wing panel due to the fuselage	(deg)
	(25)		(deg/deg)
	(26)		(deg/deg^2)
	(27)	Coefficients for sidewash at the right wing panel due to fuselage	(deg/deg)
	(28)		(deg/deg^3)

CARD 65

XWG	(29)	Effect of Rotor 1 wake on R/H wing panel
	(30)	Effect of Rotor 1 wake on L/H wing panel
	(31)	Effect of Rotor 2 wake on L/H wing panel
	(32)	Effect of Rotor 2 wake on R/H wing panel
	(33)	Coefficient of sideslip in roll moment equation
	(34)	Coefficient of sideslip and C_L in roll moment equation
	(35)	Coefficient of yaw rate and C_L in roll moment equation

CARD 66

XWG	(36)	Coefficient of roll rate in roll moment equation	
	(37)	Coefficient of sideslip in yaw moment equation	
	(38)	Coefficient of sideslip and $C_L{}^2$ in yaw moment equation	
	(39)	Coefficient of yaw rate and $C_L{}^2$ in yaw moment equation	
	(40)	Coefficient of yaw rate and C_{D_o} in yaw moment equation	
	(41)	Coefficient of roll rate and C_L in yaw moment equation	
	(42)	Coefficient of roll rate and $dC_D/d\alpha$ in yaw moment equation	(deg)

2.8.2 Aerodynamic Inputs

CARD 67

YWG	(1)	Drag divergence Mach number for $\alpha = 0$	
	(2)	Mach number for lower boundary of supersonic region	
	(3)	Maximum C_L normal flow, M (Mach number) = 0	
	(4)	Coefficients of Mach number	
	(5)	in maximum C_L equation, normal	
	(6)	flow	
	(7)	Maximum C_L, reversed flow, M = 0	

CARD 68

YWG	(8)	Slope of lift curve for M = 0	(/deg)
	(9)	Coefficients of M for lift	(/deg)
	(10)	curve slope in subsonic	(/deg)
	(11)	region	(/deg)
	(12)	C_D for $\alpha = 0$, M = 0	
	(13)	Coefficients of α in a non-	(/deg)
	(14)	divergent drag equation	(/deg^2)

CARD 69

YWG	(15)	Coefficient in supersonic drag equation	
	(16)	Maximum nondivergent C_D	
	(17)	Thickness/chord ratio	
	(18)	Control variable for using of data table	
	(19)	Drag rise coefficient	(/deg)
	(20)		
	(21)		

CARD 6A

YWG	(22)	Coefficients for α for	(/deg^2)
	(23)	Mach Critical in steady C_M	(deg)
	(24)	equation	
	(25)	C_M for $\alpha = 0$, M = 0	
	(26)		
	(27)		
	(28)		

NOTE: The descriptions for the aerodynamic inputs for the stabilizing surfaces (YSTB1, YSTB2, YSTB3, and YSTB4 arrays) are identical to that for the YWG array.

2.8.3 Control Linkage Inputs (include only if IPL(9) > 0)

CARD 6B

XCWG	(1)	Coefficients for rigging wing angle to collective stick position	(deg/in.)
	(2)		(deg/in.^{2})
	(3)	Breakpoint for collective rigging	(%)
	(4)	Coefficients for rigging wing to F/A cyclic stick position	(deg/in.)
	(5)		(deg/in.^{2})
	(6)	Breakpoint for F/A cyclic rigging	(%)
	(7)	Linkage switch (0.0 for incidence)	

CARD 6C

XCWG	(8)	Coefficients for rigging right wing panel to lateral cyclic stick position	(deg/in.)
	(9)		(deg/in.^{2})
	(10)	Breakpoint for lateral stick rigging	(%)
	(11)	Coefficients for rigging right wing panel to pedal position	(deg/in.)
	(12)		(deg/in.^{2})
	(13)	Breakpoint for pedal rigging	(%)
	(14)	Coefficient for rigging wing angle to F/A mast tilt	(deg/deg)

2.9 STABILIZING SURFACE GROUPS (omit all four groups if IPL(10) = 0 or IPL(1) ≠ 0)

2.9.1 Stabilizing Surface Group No. 1 (include only if $|IPL(10)| \geq 1$)

CARD 70 Stabilizing Surface Group No. 1 Identification Card

2.9.1.1 Basic Inputs

CARD 71

XSTB1	(1)	Stabilizing Surface Area	(ft^2)
	(2)	Stationline } Location of center	(in.)
	(3)	Buttline } of pressure for the	(in.)
	(4)	Waterline } stabilizing surface	(in.)
	(5)	Incidence angle	(deg)
	(6)	Effective dihedral angle (+ up)	(deg)
	(7)	Sweep angle of quarter chord line (+ aft)	(deg)

CARD 72

XSTB1	(8)	Geometric aspect ratio of surface	
	(9)	Spanwise efficiency factor	
	(10)	Taper ratio	
	(11)	Tail-boom bending coefficient	(rad/lb)
	(12)	Dynamic pressure reduction at surface due to fuselage	
	(13)	Downwash at surface due to wing	(deg)
	(14)	Control surface deflection	(deg)

CARD 73

XSTB1	(15)	Coefficients for a change in lift	(/deg)
	(16)	coefficient as a function of control surface deflection	($/deg^2$)
	(17)	Coefficients for change in maximum	(/deg)
	(18)	lift coefficient as a function of control surface deflection	($/deg^2$)
	(19)	Coefficients for change in profile	(/deg)
	(20)	drag as a function of control surface deflection	($/deg^2$)
	(21)		

CARD 74

XSTB1	(22)	Coefficients for change in surface	(/deg)
	(23)	pitching moment coefficient as a function of control surface deflection	(/deg^2)
	(24)	Coefficients for downwash at	(deg)
	(25)	surface due to the fuselage	(deg/deg)
	(26)		(deg/deg^2)
	(27)	Coefficients for sidewash at the	(deg/deg)
	(28)	surface due to the fuselage	(deg/deg^3)

CARD 75

XSTB1	(29)	Effect of Rotor 1 wake on the surface	
	(30)	Velocity at which surface starts to enter Rotor 1 wake	(KTAS)
	(31)	Velocity at which surface is completely in the Rotor 1 wake	(KTAS)
	(32)	Effect of Rotor 2 wake on the surface	
	(33)	Velocity at which surface starts to enter Rotor 2 wake	(KTAS)
	(34)	Velocity at which surface is completely in the Rotor 2 wake	(KTAS)
	(35)		

2.9.1.2 <u>Aerodynamic Inputs</u>

CARD 76
CARD 77 } YSTB1(1)→YSTB1(28)
CARD 78
CARD 79

2.9.1.3 <u>Control Linkage Inputs</u> (include only if IPL(10) $\geq$ 1)

CARD 7A

XCS1	(1)	Coefficients for rigging stabilizer angle	(deg/in.)
	(2)	position to collective position	(deg/in.^{2})
	(3)	Breakpoint for collective rigging	(%)
	(4)	Coefficients for rigging stabilizer angle	(deg/in.)
	(5)	position to F/A cyclic stick position	(deg/in.^{2})
	(6)	Breakpoint for F/A cyclic rigging	(%)
	(7)	Linkage switch (0.0 for incidence)	

CARD 7B

XCS1	(8)	Coefficient for rigging stabilizer angle position to lateral cyclic position	(deg/in.)
	(9)		(deg/in.^{2})
	(10)	Breakpoint for lateral cyclic rigging	(%)
	(11)	Coefficients for rigging stabilizer angle to pedal position	(deg/in.)
	(12)		(deg/in.^{2})
	(13)	Breakpoint for pedal rigging	(%)
	(14)	Coefficient for rigging stabilizer to F/A mast tilt	(deg/deg)

2.9.2 Stabilizing Surface No. 2 (include only if $|IPL(10)| \geq 2$)

CARD 80 Stabilizing Surface No. 2 Identification Card

2.9.2.1 Basic Inputs

CARD 81
CARD 82
CARD 83 } XSTB2(1) → XSTB2(35)
CARD 84
CARD 85

2.9.2.2 Aerodynamic Inputs

CARD 86
CARD 87 } YSTB2(1) → YSTB2(28)
CARD 88
CARD 89

2.9.2.3 Control Linkage Inputs (include only if IPL(10) $\geq$ 2)

CARD 8A
CARD 8B } XCS2(1) → XCS2(14)

2.9.3 Stabilizing Surface No. 3 (include only if $|IPL(10)| \geq 3$)

CARD 90 Stabilizing Surface No. 3 Identification Card

2.9.3.1 Basic Inputs

CARD 91
CARD 92
CARD 93 } XSTB3(1) → XSTB3(35)
CARD 94
CARD 95

2.9.3.2 **Aerodynamic Inputs**

CARD 96
CARD 97
CARD 98
CARD 99
} YSTB3(1) → YSTB3(28)

2.9.3.3 **Control Linkage Inputs** (include only if IPL(10) $\geq$ 3)

CARD 9A
CARD 9B
} XCS3(1) → XCS3(14)

2.9.4 **Stabilizing Surface No. 4** (include only if $|IPL(10)| = 4$)

CARD 100 Stabilizing Surface No. 4 Identification Card

2.9.4.1 **Basic Inputs**

CARD 101
CARD 102
CARD 103
CARD 104
CARD 105
} XSTB4(1) → XSTB4(35)

2.9.4.2 **Aerodynamic Inputs**

CARD 106
CARD 107
CARD 108
CARD 109
} YSTB4(1) → YSTB4(28)

2.9.4.3 **Control Linkage Inputs** (include only if IPL(10) = 4)

CARD 10A
CARD 10B
} XCS4(1) → XSC4(14)

2.10 JET GROUP (omit if IPL(11) = 0 or IPL(1) ≠ 0)

CARD 110 Jet Group Identification Card

CARD 111

XJET	(1)	Number of controllable jets		
	(2)	Thrust of right, or first, jet		(lb)
	(3)	Thrust of left, or second, jet		(lb)
	(4)	Stationline	Location of right (first) jet thrust	(in.)
	(5)	Buttline		(in.)
	(6)	Waterline		(in.)
	(7)			

CARD 112

XJET	(8)	Yaw angle, body to right (first) jet	(deg)
	(9)	Pitch angle, body to right (first) jet	(deg)
	(10)		
	(11)		
	(12)		
	(13)		
	(14)		

2.11 <u>EXTERNAL STORE/AERODYNAMIC BRAKE GROUP</u> (omit entire group if IPL(12) = 0 or IPL(1) $\neq$ 0)

CARD 120 Store/Brake Group Identification Card

2.11.1 <u>Store/Brake No. 1</u> (include only if IPL(12) $\geq$ 1)

CARD 121A

XST1	(1)	Weight of store (< 0 for aerodynamic brake)		(lb)
	(2)	Stationline	Location of store/ brake center of gravity	(in.)
	(3)	Buttline		(in.)
	(4)	Waterline		(in.)
	(5)	Distance from cg to center of pressure at α_{sc} = 0 (+ aft)		(in.)
	(6)	Distance from cp at α_{sc} = 0 to cp at α_{sc} = $\pm$ 90° (+ aft)		(in.)
	(7)	Dynamic pressure loss at store		

CARD 121B

XST1	(8)	Store rolling inertia	(slug-ft^2)
	(9)	Store pitching inertia	(slug-ft^2)
	(10)	Store yawing inertia	(slug-ft^2)
	(11)	Store product of inertia	(slug-ft^2)
	(12)	Induced velocity factor from main rotor	
	(13)	Induced velocity factor from tail rotor	
	(14)	Aerodynamic brake deployment	(%)

CARD 121C

XST1	(15)	L_0/q	Coefficients for store/ brake lift, drag, and side force equations	(ft^2)
	(16)	L_1/q		(ft^2)
	(17)	D_0/q		(ft^2)
	(18)	D_{SIDE}/q		(ft^2)
	(19)	D_{TOP}/q		(ft^2)
	(20)	Y_0/q		(ft^2)
	(21)	Y_1/q		(ft^2)

2.11.2 <u>Store/Brake No. 2</u> (include only if IPL(12) $\geq$ 2)

CARD 122A CARD 122B CARD 122C	XST2(1) → XST2(21); same input sequence and format as XST1(1) → XST1(21)

2.11.3 <u>Store/Brake No. 3</u> (include only if IPL(12) $\geq$ 3)

CARD 123A CARD 123B CARD 123C	XST3(1) → XST3(21); same input sequence and format as XST1(1) → XST1(21)

2.11.4 <u>Store/Brake No. 4</u> (include only if IPL(12) = 4)

CARD 124A CARD 124B CARD 124C	XST4(1) → XST4(21); same input sequence and format as XST1(1) → XST1(21)

2.12 ROTOR CONTROLS GROUP

CARD 130 Controls Group Identification Card

2.12.1 Basic Controls Subgroup

CARD 131

XCON	(1)	Range of collective stick	(in.)
	(2)	Collective pitch for Rotor 1 with stick full down ($\beta_M = 0$)	(deg)
	(3)	Range of collective pitch for Rotor 1 ($\beta_M = 0$)	(deg)
	(4)	Rotor 1 collective pitch lock indicator ($\neq 0$ for locked)	
	(5)	Rotor 1 root collective pitch if XCON(4) $\neq 0$	(deg)
	(6)	Change in Jet Thrust with collective stick position	(lb/in.)
	(7)		

CARD 132

XCON	(8)	Range of F/A cyclic stick	(in.)
	(9)	Rotor 1 F/A cyclic pitch with stick full aft	(deg)
	(10)	Range of F/A cyclic pitch for Rotor 1	(deg)
	(11)	Rotor 1 F/A cyclic pitch lock indicator ($\neq 0$ for locked)	
	(12)	Rotor 1 F/A cyclic pitch if XCON(11) $\neq 0$	(deg)
	(13)	Change in Jet Thrust with F/A cyclic stick position	(lb/in.)
	(14)		

CARD 133

XCON	(15)	Range of lateral cyclic stick	(in.)
	(16)	Rotor 1 lateral cyclic pitch with stick full left	(deg)
	(17)	Range of lateral cyclic pitch for Rotor 1	(deg)
	(18)	Rotor 1 lateral cyclic pitch lock indicator ($\neq 0$ for locked)	
	(19)	Rotor 1 lateral cyclic pitch if XCON(18) $\neq 0$	(deg)
	(20)	Change in Jet Thrust with lateral cyclic stick position	(lb/in.)
	(21)		

CARD 134

XCON	(22)	Range of pedals	(in.)
	(23)	Rotor 2 collective pitch with pedals full right	(deg)
	(24)	Range of collective pitch for Rotor 2	(deg)
	(25)	Rotor 2 collective pitch lock indicator ($\neq$ 0 for locked)	
	(26)	Rotor 2 collective pitch if XCON(25) $\neq$ 0	(deg)
	(27)	Change in Jet Thrust with pedal position	(lb/in.)
	(28)		

2.12.2 <u>Supplemental Rotor Controls Subgroup</u> (omit if IPL(13) = 0)

CARD 135

XCRT	(1)	Change in Rotor 2 collective pitch angle due to change in intermediate collective angle	(deg/deg)
	(2)	Change in Rotor 1 collective pitch angle due to change in intermediate F/A cyclic control angle	(deg/deg)
	(3)	Change in Rotor 2 collective pitch angle due to change in intermediate F/A cyclic control angle	(deg/deg)
	(4)	Change in Rotor 2 F/A cyclic pitch angle due to change in intermediate F/A cyclic control angle	(deg/deg)
	(5)	Change in Rotor 1 collective pitch angle due to change in intermediate lateral cyclic control angle	(deg/deg)
	(6)	Change in Rotor 2 collective pitch angle due to change in intermediate lateral cyclic control angle	(deg/deg)
	(7)	Change in Rotor 1 F/A cyclic pitch due to change in intermediate lateral cyclic control angle	(deg/deg)

CARD 136

XCRT	(8)	Change in Rotor 2 F/A cyclic pitch due to change in lateral cyclic control angle	(deg/deg)
	(9)	Change in Rotor 2 lateral cyclic pitch due to change in lateral cyclic control angle	(deg/deg)
	(10)	Change in Rotor 1 collective pitch angle due to change in pedal control angle	(deg/deg)
	(11)	Change in Rotor 1 F/A cyclic pitch due to change in pedal control angle	(deg/deg)
	(12)	Change in Rotor 2 F/A cyclic pitch due to change in pedal control angle	(deg/deg)
	(13)	Change in Rotor 1 lateral cyclic pitch due to change in pedal control angle	(deg/deg)
	(14)	Change in Rotor 2 lateral cyclic pitch due to change in pedal control angle	(deg/deg)

CARD 137

XCRT	(15)	Switch to change rotor control linkages with F/A mast tilt (0.0 = no change)	
	(16)	Coefficients for changing XCON(2) as a function of F/A mast tilt	(deg/deg)
	(17)		(deg/deg^2)
	(18)	Range of collective pitch for Rotor 1 at F/A mast tilt = 90°	(deg)
	(19)	Coefficient for modifying XCRT(5) and XCRT(6) as a function of F/A mast tilt	(deg/deg)
	(20)	Coefficients for modifying XCRT(10) as a function of F/A mast tilt	(deg/deg)
	(21)		(deg)

CARD 138

XCRT	(22)	Coefficient for nonlinear rigging of Rotor 1 collective pitch	(deg/in.^{2})
	(23)	Coefficients for nonlinear rigging of Rotor 1 F/A cyclic pitch	(deg/in.)
	(24)		(deg/in.^{2})
	(25)	Coefficients for nonlinear rigging of Rotor 1 lateral cyclic pitch	(deg/in.)
	(26)		(deg/in.^{2})
	(27)	Coefficients for nonlinear rigging of Rotor 2 collective pitch	(deg/in.)
	(28)		(deg/in.^{2})

2.13 ITERATION LOGIC GROUP

CARD 140 Iteration Logic Group Identification Card

CARD 141

XIT	(1)	Iteration limit for TRIM	
	(2)	$\Delta\Psi$ of rotor(s) for time-variant trim	(deg)
	(3)	Limiter for change in average rotor-induced velocity	(ft/sec)
	(4)	Partial derivative increment for STAB	
	(5)		
	(6)		
	(7)		

CARD 142

XIT	(8)	Minimum value for main rotor flapping angle correction limit	(deg)
	(9)	Minimum value for tail rotor flapping angle correction limit	(deg)
	(10)	Maximum value for use of variable damper for main rotor	(ft-lb)
	(11)	Maximum value for use of variable damper for tail rotor	(ft-lb)
	(12)	Starting value for TRIM correction limit	(deg)
	(13)	Minimum value for TRIM correction limit	(deg)
	(14)	Maximum value for use of variable damper in TRIM	(lb or ft-lb)

CARD 143

XIT	(15)	Allowable error in F/A force balance	(lb)
	(16)	Allowable error in lateral force balance	(lb)
	(17)	Allowable error in vertical force balance	(lb)
	(18)	Allowable error in pitching and yawing moment balance	(ft-lb)
	(19)	Allowable error in rolling moment balance	(ft-lb)
	(20)	Allowable error in main rotor flapping moment balance	(ft-lb)
	(21)	Allowable error in tail rotor flapping moment balance	(ft-lb)

2.14 FLIGHT CONSTANTS GROUP

NOTE: There is no CARD 150 because there is no Group Identification Card for Flight Constants Group.

CARD 151

XFC	(1)	Forward velocity (ground reference)	(kt)
	(2)	Lateral velocity (ground reference)	(kt)
	(3)	Rate of climb (ground reference)	(ft/sec)
	(4)	Altitude (geometric)	(ft)
	(5)	Euler angle yaw (heading angle)	(deg)
	(6)	Euler angle pitch	(deg)
	(7)	Euler angle roll	(deg)

CARD 152

XFC	(8)	Collective stick position	(%)
	(9)	F/A cyclic stick position	(%)
	(10)	Lateral cyclic stick position	(%)
	(11)	Pedal position	(%)
	(12)	g level	
	(13)		
	(14)		

CARD 153

XFC	(15)	Main rotor F/A flapping angle	(deg)
	(16)	Main rotor lateral flapping angle	(deg)
	(17)	Tail rotor F/A flapping angle	(deg)
	(18)	Tail rotor lateral flapping angle	(deg)
	(19)	Main rotor thrust	(lb)
	(20)	Tail rotor thrust	(lb)
	(21)		

CARD 154

XFC	(22)		
	(23)		
	(24)	Maximum engine horsepower available	(hp)
	(25)	Engine RPM	(rpm)
	(26)	Atmospheric logic switch (0.0 = Std. Day)	
	(27)	Pressure altitude	(ft)
	(28)	Ambient temperature	($^{\circ}$C or $^{\circ}$F)

NOTE: END OF TRIM OR TRIM-STAB DECK.

2.15 BOBWEIGHT GROUP (include only if NPART = 2 or 4 and IPL(14) ≠ 0)

CARD 200 Bobweight Group Identification Card

CARD 201

XBW	(1)	Effectivity coefficient	(deg/in.)
	(2)	Spring constant	(lb/in.)
	(3)	Damping coefficient	(lb-sec/in.)
	(4)	Weight of bobweight	(lb)
	(5)		
	(6)		
	(7)	g preload	(g)

2.16 <u>WEAPONS GROUP</u> (include only if NPART = 2 or 4 and IPL(14) $\neq$ 0)

CARD 210 Weapons Group Identification Card

CARD 211

XGN	(1)	Stationline	Location of weapon	(in.)
	(2)	Buttline		(in.)
	(3)	Waterline		(in.)
	(4)	Azimuth (+ right)		(deg)
	(5)	Elevation (+ up)		(deg)
	(6)			
	(7)			

2.17 SCAS GROUP (include only if NPART = 2 or 4 and IPL(14) ≠ 0)

CARD 220 SCAS Group Identification Card

CARD 221

XSCAS	(1)	K_H, Roll response feedback gain		$\frac{\text{(in. of stick-sec)}}{\text{(deg)}}$
	(2)	τ_1	Roll channel time constants	(sec)
	(3)	τ_2		(sec)
	(4)	τ_3		(sec)
	(5)	τ_4		(sec)
	(6)	τ_5		(sec)
	(7)	K_G, Roll pilot feedforward gain		$\frac{\text{(in. of stick-sec)}}{\text{(in. of stick)}}$

CARD 222

XSCAS	(8)	K_H, Pitch response feedback gain		$\frac{\text{(in. of stick-sec)}}{\text{(deg)}}$
	(9)	τ_1	Pitch channel time constants	(sec)
	(10)	τ_2		(sec)
	(11)	τ_3		(sec)
	(12)	τ_4		(sec)
	(13)	τ_5		(sec)
	(14)	K_G, Pitch pilot feedforward gain		$\frac{\text{(in. of stick-sec)}}{\text{(in. of stick)}}$

CARD 223

XSCAS	(15)	K_H, Yaw response feedback gain		$\frac{\text{(in. of pedal-sec)}}{\text{(deg)}}$
	(16)	τ_1	Yaw channel time constants	(sec)
	(17)	τ_2		(sec)
	(18)	τ_3		(sec)
	(19)	τ_4		(sec)
	(20)	τ_5		(sec)
	(21)	K_G, Yaw pilot feedforward gain		$\frac{\text{(in. of pedal sec)}}{\text{(in. of pedal)}}$

CARD 224

XSCAS	(22)	Maximum Authority in Roll	(%)
	(23)	Maximum Authority in Pitch	(%)
	(24)	Maximum Authority in Yaw	(%)
	(25)	Dead band for d/dt (Roll Moment)	(ft-lb/sec)
	(26)	Dead band for d/dt (Pitch Moment)	(ft-lb/sec)
	(27)	Dead band for d/dt (Yaw Moment)	(ft-lb/sec)
	(28)		

2.18 STABILITY ANALYSIS TIMES GROUP (include only if NPART = 2, 4, or 5 and IPL(14) ≠ 0)

CARD 230 Stability Analysis Times Group Identification Card

CARD 231

TSTAB	(1)	Time or azimuth angle for first analysis	(sec or deg)
	(2)	Time or azimuth angle for second analysis	(sec or deg)
	(3)	Time or azimuth angle for third analysis	(sec or deg)
	(4)	Time or azimuth angle for fourth analysis	(sec or deg)
	(5)	Time or azimuth angle for fifth analysis	(sec or deg)
	(6)	Time or azimuth angle for sixth analysis	(sec or deg)
	(7)	Time or azimuth angle for seventh analysis	(sec or deg)

CARD 232

TSTAB	(8)	Time or azimuth angle for eighth analysis	(sec or deg)
	(9)	Time or azimuth angle for ninth analysis	(sec or deg)
	(10)	Time or azimuth angle for tenth analysis	(sec or deg)
	(11)	Time or azimuth angle for eleventh analysis	(sec or deg)
	(12)	Time or azimuth angle for twelfth analysis	(sec or deg)
	(13)	Time or azimuth angle for thirteenth analysis	(sec or deg)
	(14)	Time or azimuth angle for fourteenth analysis	(sec or deg)

NOTE: If no stability analyses are to be performed, TSTAB(1) must refer to time or rotor azimuth angle after the end of the maneuver. A value of 9999. (seconds) is a suggested input for this case.

2.19 BLADE ELEMENT DATA PRINTOUT GROUP (include only if NPART = 2, 4, or 5 and IPL(14) ≠ 0)

CARD 240 Blade Element Data Printout Group Identification Card

CARD 241

TAIR	(1)	Time or azimuth angle for first printout	(sec or deg)
	(2)	Time or azimuth angle for second printout	(sec or deg)
	(3)	Time or azimuth angle for third printout	(sec or deg)
	(4)	Time or azimuth angle for fourth printout	(sec or deg)
	(5)	Time or azimuth angle for fifth printout	(sec or deg)
	(6)	Time or azimuth angle for sixth printout	(sec or deg)
	(7)	Time or azimuth angle for seventh printout	(sec or deg)

CARD 242

TAIR	(8)	Time or azimuth angle for eighth printout	(sec or deg)
	(9)	Time or azimuth angle for ninth printout	(sec or deg)
	(10)	Time or azimuth angle for tenth printout	(sec or deg)
	(11)	Time or azimuth angle for eleventh printout	(sec or deg)
	(12)	Time or azimuth angle for twelfth printout	(sec or deg)
	(13)	Time or azimuth angle for thirteenth printout	(sec or deg)
	(14)	Time or azimuth angle for fourteenth printout	(sec or deg)

NOTE: If no printouts are to be made, TAIR(1) must refer to a time or rotor azimuth angle after the end of the maneuver. A value of 9999. (seconds) is a suggested input for this case.

2.20 MANEUVER TIME CARD (include only if NPART = 2, 4, or 5)

CARD 301

TCI	(1)	Start time of maneuver	(sec)
	(2)	First time or azimuth increment	(sec or deg)
	(3)	Time to stop using first increment	(sec)
	(4)	Second time or azimuth increment	(sec or deg)
	(5)	Time to stop using second increment and return to first increment	(sec)
	(6)	Time to stop the maneuver	(sec)
	(7)		

2.21 VARIATIONS FROM TRIMMED FLIGHT (This card type may be included only if NPART = 2, 4, or 5)

CARD 311

Col. 1	NEXTJ (= 0 for last card in group)
Col. 2 - 5	J, variation selector
Col. 11 - 20	Inputs which define the variations for each value of J in 6F10.0 format
Col. 21 - 30	
Col. 31 - 40	
Col. 41 - 50	
Col. 51 - 60	
Col. 61 - 70	

CARD 312 Same as CARD 311

CARD 313 Same as CARD 311

CARD 314 Same as CARD 311

⋮

CARD 329

CARD 330

CARD 331

2.22 <u>PLOTTING OF MANEUVER TIME HISTORY DATA</u> (This group may be included only if NPART = 2, 4, or 5; otherwise it must be excluded)

CARD 401

Col.	2	NOP (Must equal 3 for plotting)
	4 - 6	NPRINT Print Control

CARDS 402A, 402B, ... (One for each set of plots desired - 30 maximum)

Col.	3 - 5	KV1, Code of variable 1
	8 - 10	KV2, Code of variable 2
	13 - 15	KV3, Code of variable 3
	20	KEY (1 = plot on Printer only)
	25	KEYS (0 = last 402-type card)
	31 - 40	SC1, Minimum scale for KV1
	41 - 50	SC2, Minimum scale for KV2
	51 - 60	SC3, Minimum scale for KV3

See Section 6 for the code numbers to be used for KV1, KV2, and KV3.

2.23 HARMONIC ANALYSIS OF MANEUVER TIME HISTORY DATA (These cards may be included only if NPART = 2, 4, 5, or 8)

CARD 501

Col. 2	NOP (must equal 9 for harmonic analysis)	
11 - 15	NVARA, Number of variables to be frequency analyzed	
21 - 25	AL(1), Start time for interval to be analyzed	(sec)
26 - 30	AH(1), Stop time for interval to be analyzed	(sec)
31 - 35	NVARB, Print control for amplitude function (0 = print only)	
41 - 45	AL(2), Base frequency for analysis (0.0 = M/R 1/rev)	(cps)

CARDS 502A, 502B, etc.

Code numbers of variables to be analyzed (see Section 6 for code numbers). Format is up to 14 code numbers per card in 5 column fields (14I5 format).

2.24 VECTOR ANALYSIS OF MANEUVER TIME HISTORY DATA (These cards may be included only if NPART = 2, 4, 5, or 8)

CARD 601

Col. 1 - 2	NOP (must equal 11 for curve fitting)
11 - 15	NVARA, Total number of curves to be fit in Step 1
26 - 30	AL(1), Baseline frequency for Step 1 (cps)
31 - 35	NVARB, Total number of reference curves for Step 2
41 - 45	AL(2), Total number of curve fits in Step 3
51 - 55	NVARC, Number of time points to be skipped before step 1 curve fit begins

CARD 602A, 602B, etc.

Code number of curves to be fit in Step 1 (NVARA inputs, 14I5 format)

CARD 603A, 603B, etc. (NVARB sets of these cards, 14I5 for each card)

Col. 1 - 5	NX, Quantity of variables to be compared to reference variables
6 - 10	Code number of reference variables
11 - 15	NX code numbers of variables to be compared to reference variable
16 - 20	
21 - 25	
.	
.	
.	

CARDS 604A, 604B, etc. (AL(2) cards of this type)

Col. 1 - 5	Code number for variable C
6 - 10	Code number for variable D
11 - 15	Code number for variable E

See Section 6 for the code numbers of the variables.

2.25 <u>STORING MANEUVER TIME HISTORY DATA ON TAPE</u> (This card may be included only if NPART = 2, 4, or 5)

CARD 701

Col.	2	NOP (must equal 8 for tape file operations)
	11→15	NOP1 (must be blank or all zeros to store data)

NOTE: Maneuver time history data which has been stored on tape can be retrieved with NPART = 8 (see CARD 01).

3. USER'S GUIDE TO INPUT FORMAT

This section of the report presents a discussion of the inputs defined in Section 2. It is primarily intended for the inexperienced user of the program and for reference purposes. To simplify cross reference between the two sections, the numbers of the subsections of this section correspond to those in Section 2; e.g., the inputs for the Main Rotor given in Section 2.6 are discussed in Section 3.6.

The units for each dimensional input are given at the right side of the page throughout Section 2. Whenever possible, inputs which are normally classified as nondimensional are given units to help explain them. For example, the units for the pylon control coupling ratios on CARDS 48, 49, 58, and 59 are given as deg/deg, indicating that the ratios are degrees of control input per degree of pylon motion, rather than being left blank to indicate a nondimensional input.

Most inputs are read into arrays. The first character in each array name and most individual variables is a code for the general classification of the array or variable. This relationship of first character and data type is given below.

X	For the most part, inputs which can be physically measured, analytically determined, or defined and which relate directly to the rotorcraft configuration.
Y	Inputs related to aerodynamic characteristics of the airfoil sections or surfaces.
I	Integer inputs which control program logic.
T	Inputs related to time points in a maneuver.

3.1 GENERAL

3.1.1 Composition of a Data Deck and Card Format

An input data deck must be set up to perform one and only one of the following primary program operations:

(1) Determination of trimmed flight condition only
(2) Trim followed by maneuver without stability analysis
(3) Trim followed by maneuver with stability analysis during maneuver.
(4) Trim followed by maneuver where maneuver time point data are stored for a subsequent restart of the maneuver.
(5) Maneuver restart
(6) Trim followed by stability analysis; no maneuver.

(7) Retrieval of maneuver data stored on tape.
(8) Sweeps of trim conditions with or without stability analysis.

These eight operations are shown in Figures 1-1 through 1-8 respectively. The implication of the statement "one and only one" above is that data decks which perform different primary operations must not be stacked; they must be submitted as separate runs. For example, suppose the user wants data on a particular configuration for (1) a trim and a stability analysis at 100 knots and (2) a maneuver which starts from a 120-knot trim condition. The two cases must be submitted separately. However, in the first case the user may set it up as a parameter sweep so that the 100-knot trim with stability analysis is followed by a trim at 120-knots. The data from the 120-knot trim can then be used as inputs to the second case to shorten the time required for the 120-knot trim prior to the maneuver. It is not possible to follow a parameters sweep case with a maneuver.

The AGAJ73 input deck is subdivided into input groups where each group contains a set of related data (e.g., rotor, fuselage, and wing parameters; program and iteration logic specification; and data tables or data blocks). The complete list of all possible input groups in the order in which they must be input is presented in Table 2-1.

It is very rare that the user will need to use every group to define the configuration which is to be simulated. Hence, as a user convenience, the first data card of the first group of input data (the Program Logic Group) contains fourteen switches which specify the groups and/or arrays that must or must not be included in the data deck. This feature eliminates the necessity of including sets of blank cards or dummy inputs for groups which are not needed. During the reading of the data deck and initialization of input data, many checks are performed to assure that the specifications of the Program Logic Group and the groups which follow are compatible, complete, and not contradictory. Obviously, the checking procedure cannot correct or diagnose every possible input error, and the user must exercise the normal amount of care in following the instructions of this input guide.

In Section 2 each card of input data is identified by a sequence number. Within an individual group the numbers are consecutive. However, the capability of adding and deleting entire groups from the deck precludes consecutive numbering between groups. Considering the large number of cards which can be included in a deck, it is strongly recommended that all cards be numbered according to the sequence number given in Section 2 and used in this section. Doing so will greatly simplify locating specific inputs and reconstructing a dropped or shuffled deck.

3.1.2 Group Identification Cards and Data Library

The majority of the AGAJ73 input groups are headed by a Group Identification (ID) Card. The use of this card is discussed in this section and is not repeated for each group with an ID card.

The primary purpose of the ID cards is to provide a means for using the Data Library Option discussed below. Hence, groups which cannot be called from the data library (i.e., deck identification cards; Data Table Group; Flight Constants Group; and the maneuver time specification and data analysis cards) do not have ID cards. A secondary purpose of the ID cards is to provide a convenient means of identifying the start of a new group and including comments pertaining to individual groups in the deck.

The Data Library Option (and its MODEL Option subset) is included in the master version of AGAJ73. The local programmer should be consulted to see if the option is available with the installed version of the program; if it is not (or the option is not to be used), the first eight columns of each ID card <u>must</u> be blank, and the following discussion may be bypassed.

In terms of computer equipment, the data library is a magnetic disk storage device. The stored data may consist of two types:

(1) The input data for a specific input group of a particular rotorcraft (Group Data Sets)
(2) The set of input groups which constitute all the groups needed for a particular rotorcraft (Model Data Sets)

The number of cards in a Group Data Set is equal to the maximum number of cards which may be required for the appropriate input group. The number of cards in a Model Data Set is forty, where each card corresponds to a particular input group and one element of the MODEL array in the program. Setup and maintenance of the data library are generally assigned to a programmer. Consequently, the technical details relating the establishment of a data library are not presented in this volume.

Each Group and Model Data Set on library is assigned a unique eight-character alphanumeric name. These names are then used to identify the data sets and as the data on the cards in a Model Data Set. The characters used in the name of a Group Data Set are arbitrary, but the first four characters in the name of any Model Data Set <u>must</u> be MODL.

Once data are stored on library, IDEN on the ID cards may be used to call a data set from the library. When the first eight columns of an ID card are blank, it is assumed that the library is not to be used, and all cards for the appropriate input groups must follow the ID card. If these columns are not blank, they are assumed to contain the name of a data set which is on library, and the program searches the library for the data set with the corresponding name. If the name is not found, a message to that effect is printed and execution of the program is terminated.

When the name is a group name (i.e., does not start with four characters MODL) and is found, the corresponding data set is used as the input data for that group. In this case, all remaining cards for that group must be omitted from the card deck. The reading of each group ID card is completely independent of the reading of each other ID card. Hence, a card

deck may contain any combination of groups called from library and groups input on cards which suits the user's purpose.

When a Model Data Set is to be used, the library name must be input on CARD 05 (the Program Logic Group ID Card). If the first four columns on CARD 05 contain the characters MODL, the program will search the data library for the Model Data Set with the corresponding eight-character name. If the name is not found, execution terminates. When the data set is found, the program then uses the library groups whose names are in the Model Data Set as the source of input data for all input groups. In this case, the cards for all groups included in the data set must be omitted from the card deck. The four cards for the Flight Constants Group then follow CARD 05.

3.1.3 Procedures for Changing Input Data

Frequently, it is desirable or necessary to change the values of a few individual inputs in groups called from library and/or to replace certain groups in a Model Data Set with other groups. Also, it is necessary to have a means of changing inputs when performing parameter sweeps. The &CHANGE and &GROUPS program features are provided to accomplish these tasks.

The cards which are used to exercise these features must conform to a special format:

(1) Column 1 of all cards must be blank.

(2) Columns 2 through 8 of the first card must contain the seven characters &CHANGE or &GROUPS, as appropriate.

(3) Column 9 of the first card must be blank.

(4) Change items (defined below) can start in or after Column 10 of the first card and in or after Column 2 of any subsequent card(s); items must be separated by commas.

(5) After the last character of the last change items there must be a comma or a blank column followed by the four characters &END.

3.1.3.1 Change Items for &CHANGE Cards

The change items for &CHANGE cards must be in one of two forms:

Symbolic Name = Constant

or

Array Name = Set of Constants (separated by commas)

The set of characters to be used for Symbolic Name is the array name and element number of the variable to be changed. Only those arrays and elements listed in Table 2-2 can be changed. Constant is the new value of the variable indicated. The set of characters for Array Name must be one of the array names included in Table 2-2. The Set of Constants is then the new values for the array. The number of constants in the set must be less than or equal to the dimension of the array as given in Table 2-2. In the Set of Constants the successive occurrences of the same constant can be represented by the form

k*constant

where k is a nonzero integer specifying the number of times the constant is to occur.

Blank columns are permitted before and after the equal sign in a change item and after the comma which separates change items. However, blank columns are not permitted within a name or a constant, and trailing blanks after an integer or exponent are treated as zeros.

Although a set of change items can be continued onto as many cards as needed, a single change item must not be split between cards and only the data on the first card of a continued set will be printed in the output data.

An example of the data for the &CHANGE operation is as follows:

```
            Column 1
                ↓
First Card:     b&CHANGEbXFS(1)=9500.0, XMR(44)=5.0,

Second Card:    bIPL(20)=0, TAIR=7*9999., &END
```

where b indicates a mandatory blank column; other blank columns shown are optional. This example will change gross weight to 9500 pounds, the main rotor F/A mast tilt angle to 5 degrees, the rotor aerodynamic option to steady-state only, and the first seven times for blade element data printout to 9999.0 seconds.

It is not necessary that change items be in any specified order. For example, the first change item can be for XFS(10), the second for XFS(8), the third for XFS(1), the fourth for IPL(17), etc.

As noted above, only the first card of a set of &CHANGE cards like the example is printed in the output data. To get data from both cards included in the printout, use the following form:

```
          Column 1
              ↓
First Card:   b&CHANGEbXFS(1)=9500., XMR(44)=5.0, &END
              ↓
Second Card:  b&CHANGEbIPL(20)=0, TAIR=7*9999., &END
```

Like the continued card set, this form can also consist of as many cards as needed; each will be included in the printout.

3.1.3.2 Change Items for &GROUPS Cards

The change items for &GROUPS Cards must be in the following form:

MODEL(xx) = 'yyyyyyyy'

The blanks on either side of the equal sign are optional. MODEL is an array in the program (dimensioned to 27); the data for the elements of the array are the Model Data Sets stored on library. The symbol xx must be the one- or two-digit element number of the group to be replaced (element numbers are defined in Table 2-1). The symbol yyyyyyyy is the eight-character name for the data library group which is to replace the xx element. The apostrophes at either end of the library name are mandatory.

An example of the data for the &GROUPS operation is as follows:

```
          Column 1
              ↓
              b&GROUPSbMODEL(3)='CLCD0098', &END
```

This example will cause the second airfoil data table (MODEL array element number 3) to be replaced by the CLCD0098 data table.

To replace the entire xx element of a Model Data Set with a group which is not on library, leave the eight columns for the MODEL element name (yyyyyyyy) completely blank. The required location in the deck for the externally supplied group(s) is discussed in the next subsection. The rules for the form of the &GROUPS change items are the same as for the &CHANGE change items.

3.1.3.3 Location of &CHANGE and &GROUPS Cards

When &CHANGE Cards are used to update individual data library groups, the set of cards is to be placed immediately after the Group ID card of the group being changed. When used to make changes for parameter sweeps, the cards are placed immediately after the sweep card (the second CARD 01, or NPART card, with NPART=10) which follows the last card of the Flight Constants Groups (Card 154).

The location of the &GROUPS and &CHANGE cards in a deck which uses the MODEL Option is shown in the sample deck listed in Figure 2-1. In the example, the first airfoil data table (element 2) is to be replaced by

the CLCD0090 table from library while the Iteration Logic Group (element 35) and the Blade Element Data Printout Times Group (element 40) are to be replaced with data included in the deck. The &CHANGE card shown updates the gross weight and the Stability Analysis Times Group.

The general rules for including the cards for groups with blank names in the &GROUPS card are:

(1) groups which precede the Flight Constants Group in a normal data deck (elements 1 through 35) also precede the Flight Constants Groups in the MODEL Option deck.

(2) groups which follow the Flight Constants Group (elements 36 through 40) also follow the group in the MODEL Option,

(3) the order of input of the change items on the &GROUP card is optional, but the added groups must be included in the deck in the same sequence as their MODEL array element number, and

(4) the ID card of the included group must not be included in the deck.

Although it is possible in some cases to change the values on the first card of the Program Logic Group (IPL(1→14), which specify the groups that must be in the deck), the procedure is complex, not recommended, and not discussed in this report. If a Model Data Set needs to be changed that drastically, the user should be entering data by individual groups, not MODEL Option.

3.2 IDENTIFICATION AND PROGRAM LOGIC GROUP

CARD 00 Message Card

The alphameric inputs on this card are printed six times on the first page of printed output. The comments are intended to instruct the control section about the disposition of the input card deck and printed output.

CARD 01 NPART Card

This card includes the primary program control variable, NPART, and is referred to as the NPART card. Permissible values of NPART on this second card of the data deck are 1, 2, 4, 5, 7, and 8. The value of NPART specifies the type of operation to be performed.

1 = Trim only
2 = Trim followed by maneuver (maneuver not to be restarted)
4 = Trim followed by maneuver (maneuver to be restarted)
5 = Maneuver restart
7 = Trim followed by stability analysis
8 = Retrieve maneuver data from tape for analysis

Within a single computer run, only one of the above operations may be specified. That is, only the second card of the data deck may be an NPART card with NPART = 1, 2, 4, 5, 7, or 8; data decks must <u>not</u> be stacked together into a single run. However, following the last card (CARD 154) of decks with NPART = 1 or 7, an NPART = 10 card may be included to initiate a parameter sweep,and additional NPART = 10 data sets may follow to continue the sweep. A more complete explanation of each NPART value is given below.

NPART = 1 — Compute a trimmed flight condition only. See Figure 1-1. The NPRINT, NVARA, NVARB, and NVARC inputs are not used. Subject to the IPL values, a data set of CARDS 02 through and including 154 must follow. Only an NPART = 10 card may follow CARD 154.

NPART = 2 — Compute a trimmed flight condition followed by a maneuver. See Figures 1-2 and 1-3. Subject to the IPL values, a data set of CARDS 02 through 301 (the time card) plus at least one 311-type card (J-card) must follow. The maneuver start time on CARD 301 is set to zero regardless of the input value.

Cards which follow the last J-Card specify the operation(s) to be performed on the maneuver data computed. The options are plotting, harmonic analysis, vector analysis, and storing the maneuver data on tape; they are activated by sets of 400-, 500-, 600-, and 700- series cards respectively. Since each operation is an option, the

appropriate card set must be input to perform the desired operation; if a card set is omitted, the corresponding operation is omitted. The card sets may be input in any sequence desired. If none of these card sets is included, the last J-Card is the final card of the deck; otherwise the last card of the last card set is the final card of the deck.

The NVARA input is not used. The interpretations of NPRINT, NVARB, and NVARC follow.

NPRINT

Determines frequency of printout of maneuver data. Program prints data showing initial conditions for maneuver (maneuver time t = 0) and every NPRINTth time point thereafter. A blank or zero input is reset to unity.

NVARB Controls use of Wagner function for time delay of lift buildup on wing (see Section 5-7 of Reference 6).

= 0 function is inactive

= 1 function active only for first value of time increment on CARD 301

= 2 function active only for second value of time increment on CARD 301

NVARC Controls printout of blade element air-load data at the times specified by TAIR(1-14)

= 0 printout for main rotor only

= 1 printout for both rotors

= 2 printout for tail rotor only

NPART = 4 Same as NPART = 2, except that the maneuver data will be stored so that it can be recalled at a later date for a maneuver restart (NPART = 5). See Figure 1-4. The use of this option will require the assistance of the local programmer to set up the restart tape.

NPART = 5 This is a maneuver restart case following the initial NPART = 4 case. See Figure 1-5. The local programmer should be consulted at least for the first case of this type. The complete data set for a maneuver restart is as follows:

CARD 00	Message Card
CARD 01	NPART Card: enter 5 in Column 2.
CARD 02, 03, 04	IPSN and Comments
CARD 230	Stability Times Group: if the TSTAB group is not called from library, CARDS 231 and 232 must also be included.
CARD 240	BEA Data Printout Times Group: if the TAIR group is not called from library, CARDS 241 and 242 must also be included.
CARD 301	Time Card: start time is the time at which the maneuver is to be restarted; it must be greater than zero or less than the last time point of maneuver being restarted. The time for restart need not be identically equal to a previous time point.
CARD 311, etc.	At least one maneuver command (J-Card) is required. It may be followed by plot cards, etc., as with any maneuver.

All program and iteration logic specified in the initial NPART = 4 run remains unchanged except that the two groups (TSTAB and TAIR) or at least their identification cards must be included regardless of the value of IPL(14) on the initial run. No &CHANGE cards are permitted.

NPART = 7 Compute a trimmed flight condition followed by a stability analysis. See Figure 1-6. The cards required are the same as for NPART = 1. An NPART = 10 card may follow CARD 154. Note that if the time-variant rotor analysis is activated for either rotor, a stability analysis cannot be performed.

NPART = 8 This value of NPART causes data stored on tape to be loaded on the plot disk. See Figure 1-7. The local programmer should be consulted prior to its use. The value of NVARA on this card must be <u>not</u> equal to zero. Once the data has been placed on the plot disk, 400-, 500-, and 600-series cards may be used for plotting, harmonic analysis, or vector analysis of the data. CARD 701 is used to store on tape the data which the NPART = 8 card retrieves.

Following a data set for trim only or trim and stability analysis (NPART = 1 or 7), the parameter sweep option may be exercised by including an NPART = 10 card after CARD 154.

NPART = 10 This value of NPART permits the changing of user-selected inputs and retrimming the configuration. See Figure 1-8.

NVARA If NVARA = 0, the program will attempt only to iterate to a new trim condition (equivalent to NPART = 1); if NVARA ≠ 0, the program will attempt to trim and, if successful, will also perform a stability analysis (equivalent to NPART = 7).

The data set for NPART = 10 consists of the following cards:

First Card:	CARD 01	NPART card with NPART = 10
Subsequent Card(s):	&CHANGE CARD(S)	Changes to input data using NAMELIST input as described below.

An NPART = 10 data set may be followed only by another NPART = 10 data set.

The &CHANGE cards can be used to change the value of any input or inputs on CARDS 06 through 154 except for some of the program logic inputs, the rotor mode shapes, and the inputs to the airfoil data and rotor-induced velocity distribution tables.

Program logic inputs IPL(1→2) and IPL(6→14) must not be changed. These inputs control the initial reading of data groups or blocks, and NAMELIST input is not capable of reading additional groups or blocks.

The number of rotor mode shapes, IPL(3) and IPL(4), may be decreased, which will simply reduce the number of mode shapes used in the computations by ignoring the higher order ones. However, IPL(3) and IPL(4) must not be increased.

If the switch for reading the rotor-induced velocity, IPL(5), is zero, it must not be changed. If it is not zero, it may be changed to any permissible value, i.e., 0, 1, 2, or 3. All other IPL values may be changed as desired.

When using NPART = 10 the changes made should be reasonable, e.g., less than 20 to 30 knots in airspeed, 10 to 20 feet per second in rate of climb, less than 3 to 5 degrees in aerodynamic surface incidence, etc. The larger the number of simultaneous changes made, the smaller the individual changes should be. The program assumes the last trim point is a good starting point for the next trim case. If the changes are too large

and XFC(5-11) and XFC(11-20) are not updated by the user, the chances of achieving a new trim are slim.

CARD 02 (Comment Card No. 1)

IPSN is a numeric title to the data set for identification purposes. It is printed in the output heading. The remainder of the card contains alphanumeric identifying comments which are printed in output headings as data set identification. Include it only when NPART = 1, 2, 4, 5, or 7.

CARD 03 (Comment Card No. 2)

This card also contains alphanumeric comments which are included in the output headings. Include it only when NPART = 1, 2, 4, 5, or 7.

CARD 04 (Comment Card No. 3)

The card also contains alphanumeric comments. Include it only when NPART = 1, 2, 4, 5, or 7.

CARD 05 is the identification (ID) card for the Program Logic Group. If the data library option is available, the ID card may call one of several standard sets of program logic from library, and CARDS 06, 07, and 08 must then be omitted.

Cards 06, 07, and 08 contain the bulk of the program logic. All the IPL inputs are integers (14I5 format). The logic inputs control the data groups which must be included in the input data and the program options to be used, such as unsteady aerodynamics, time-variant rotor analysis, etc. The logic has been chosen so that for the simplest cases most inputs are zero. In general, nonzero inputs activate the options and/or necessitate inputs of additional data.

For the options related to the rotors, a 0-1-2-3 type logic switch is used wherever possible. This type of switch operates in the following manner:

0 turns the option off for both rotors;

1 turns the option on for the main rotor only;

2 turns the option on for the tail rotor only;

3 turns the option on for both rotors.

CARD 06 Input Group Control Logic

IPL(1) can be used to reduce the number of input data groups to only those normally required for a wind tunnel simulation. If IPL(1) = 0, the required number of groups is not affected by IPL(1). If IPL(1) ≠ 0, the data deck may include only the following groups:

CARDS 00 through 08 (Identification and Program Logic)
Data tables specified by IPL(2), (3), (4), and (5)
Rotor Aerodynamic Group (with IPL(6) subgroups)
Main Rotor Group
Rotor Controls Group
Iteration Logic Group
Flight Constants Group
Five Maneuver-Only Groups (i.e., Bobweight, Weapons, SCAS, STAB Times, and Blade Element Data Times Groups)

If NPART = 1 or 7, the five maneuver-only groups must be omitted; if NPART = 2 or 4, IPL(14) controls the reading of these five groups. IPL(1) ≠ 0 overrides the inputs for IPL(7) and (9) through (12).

IPL(2) specifies the total number of airfoil data tables included in the Data Table Group. Permissible inputs are 0, 1, 2, 3, 4, or 5. Note that if a rotor aerodynamic subgroup specifies that it uses an airfoil data table from the Data Table Group, the corresponding table must be input. (See the Data Table Group, Section 3.3.1, and the Rotor Aerodynamic Group, Section 3.5). Also note that if IPL(2) = IPL(3) = IPL(4) = IPL(5) = 0, the Data Table Group has no data in it.

IPL(3) and (4) control the reading of the aeroelastic blade data sets included in the Data Table Group for the main rotor and tail rotor respectively. If IPL(3) = 0, all main rotor aeroelastic blade data (weight, inertia, and mode shape distributions on CARDS 16, 16A, etc.) must be omitted from the Data Table Group. Similarly, if IPL(4) = 0, all tail rotor aeroelastic blade data (CARDS 17, 17A, etc.) must be omitted. For positive, nonzero inputs, the values of IPL(3) and IPL(4) specify the number of mode shapes which must be included in the Data Table Group for the main and tail rotor respectively. Up to six modes may be input for each rotor. If aeroelastic blade data are included, the blade weight and inertia inputs, e.g., XMR(11) and XMR(12), in the corresponding rotor group(s) are ignored.

IPL(5) controls the reading and use of the Rotor-Induced Velocity Distribution (RIVD) tables which are described in Section 3.3.3. It is a 0-1-2-3 type switch. That is, if IPL(5) = 0, both the main rotor and tail rotor RIVD tables must be omitted; if IPL(5) = 1, the main rotor table must be input and tail rotor table omitted; if IPL(5) = 2, the tail rotor table must be input and the main rotor table omitted; if IPL(5) = 3, both tables must be input. If a table is not input for a particular rotor, an empirically derived equation is used to compute the distribution for that rotor. This default equation is given in Section 3.26.2.

IPL(6) specifies the total number of rotor airfoil aerodynamic subgroups included in the Rotor Aerodynamic Group. Permissible inputs are 0 to 5 inclusive. As long as the input data includes at least one rotor group, an input of 0 is reset to 1 and one subgroup must be input. If both rotors are deleted (IPL(7) = 3), IPL(6) may be input as zero to delete the reading of the Rotor Airfoil Aerodynamic Group in its entirety.

IPL(7) deletes the reading of specified rotor groups. It is a 0-1-2-3 type switch; e.g., 0 requires input of both rotor groups (none deleted) and 3 requires deletion of both groups. When a group is deleted, its ID card must also be deleted.

IPL(8) controls the reading of the rotor pylon cards (XMP(1-14) on CARDS 48 and 49 for the main rotor and XTP(1-14) on CARDS 58 and 59 for the tail rotor). It is a 0-1-2-3 type switch; e.g., 0 requires both sets of cards be omitted and 3 requires both sets be included.

IPL(9) controls the reading of the basic and aerodynamic inputs to the Wing Group (CARDS 60 through 6A) and the Wing Control Linkages Subgroup (CARDS 6B and 6C). If IPL(9) = 0, both the Group and Linkages Subgroup must be omitted; if IPL(9) > 0, both must be included. If IPL(9) < 0, the CARDS 60 through 6A must be included and CARDS 6B and 6C omitted, i.e., the wing incidence and control surface deflection are independent of the flight controls.

IPL(10) controls the reading of the basic and aerodynamic inputs to the Stabilizing Surface Groups (CARDS 70 through 79, 80 through 89, 90 through 99, and 100 through 109) and the Stabilizing Surface Control Linkages Subgroups (CARDS 7A, 7B, 8A, 8B, 9A, 9B, 10A, and 10B). If IPL(10) = 0, all Surface Groups including ID cards and Linkages Subgroups must be omitted. If IPL(10) > 0, exactly IPL(10) Surface Groups with their corresponding Linkages Subgroup must be included. If IPL(10) < 0, exactly the magnitude of IPL(10) Surface Groups must be included, but all Linkages Subgroups must be omitted; i.e., both incidence angle and control surface deflection of each stabilizing surface are independent of the flight controls. When a surface is omitted, its ID card must also be omitted.

IPL(11) controls the reading of the Jet Group. If IPL(11) = 0, the entire Jet Group including ID card must be omitted; otherwise it must be included.

IPL(12) controls the reading of the External Store/Aerodynamic Brake Group and Subgroups (CARDS 120 through 12C) and is equivalent to the number of store/brake subgroups which are to be included. If IPL(12) = 0, the entire group, including the identification card, must be omitted. If IPL(12) > 0, the group must include the identification card and the specified number of subgroups; e.g., if IPL(12) = 3, the group must consist of ten cards (one identification card plus three subgroups of three cards each).

IPL(13) controls reading of the Supplemental Rotor Control Subgroups (CARDS 135 through 138). If IPL(13) = 0, the subgroup must be omitted; otherwise it must be included.

IPL(14) controls the reading of the Bobweight, Weapons, SCAS, Stability Times, and Blade Element Printout Groups when NPART = 2 or 4. If IPL(14) = 0, all five groups must be omitted; if $\neq$ 0, all five must be included. If NPART does not equal 2 or 4, all five groups must be omitted. This input does not affect the reading of the last two groups when NPART = 5.

CARD 07

IPL(15) defines the flight condition to be trimmed in conjunction with the specified g-level, XFC(12), and the input Euler roll angle, XFC(7), as described below.

IPL(15)	XFC(12)	Flight Condition
= 0	= 0.0	Unaccelerated Flight
	$\neq$ 0.0	Coordinated turn at g-level of XFC(12)
$\neq$ 0	$\geq$ 1.0	Zero turn rate pullup at g-level of XFC(12)
	< 1.0	Zero turn rate pushover at g-level of XFC(12)

In addition, the following applies to coordinated turns:

(1) Regardless of the TRIM procedure specified by IPL(16), the program will iterate on pitch and yaw.

(2) The "fixed" roll angle for each iteration is determined from the previous iteration by solving the following relationship for roll angle:

$$n \cos \Phi = \cos \Theta \cos^2 \Phi + (\cos \Theta \sin^2 \Phi + \tan\beta \sin\Phi \sin\Theta)/K$$

where $K = 1 + (\tan \Theta \tan\alpha)/\cos\Phi$

Θ = Euler pitch angle

Φ = Euler roll angle

n = g level, XFC(12)

α = angle of attack

β = angle of sideslip

(3) The turn direction is selected by use of the sign on the input roll angle, XFC(7). A positive or zero value gives a right turn, a negative value a left turn.

IPL(16) controls the Euler angle held constant during the TRIM procedure. If IPL(16) = 0, the TRIM procedure holds the yaw angle constant. It is necessary to hold yaw for low speed or hover cases, since the force and moment derivatives with yaw angle all go to zero in hover. If IPL(16) $\neq$ 0, the TRIM procedure holds the Euler roll angle constant and iterates on pitch and yaw. This tends to give the most realistic TRIM conditions at high speeds, since a pilot has a more sensitive feeling for a roll angle than a yaw angle. If IPL(15), the TRIM type indicator, specifies a coordinated turn, the TRIM procedure iterates on pitch and yaw regardless of the value of IPL(16).

IPL(17) controls the computation of the partial derivative matrix during trim. Permissible values are 0, 1, 2, 3, 4, and 5. If IPL(17) = 0, the matrix is computed every fifth iteration, i.e., iterations 1, 6, 11, ... etc., and uses the most recently computed matrix for iterations in which the matrix is not computed. If IPL(17) $\neq$ 0, the matrix is computed every IPL(17)th iteration. Computing the matrix for every iteration rather than every fifth iteration will increase the run time for trim by a factor of approximately three. Computation at every iteration is normally necessary only when there is difficulty getting a case to trim with IPL(17) = 0.

IPL(18) controls the steady-state aerodynamics used for the main rotor. If IPL(18) = 1, 2, 3, 4 or 5, the IPL(18)th Rotor Airfoil Aerodynamic (RAA) subgroup is used to compute the main rotor aerodynamic coefficients at all blade stations, i.e., the blade has a constant airfoil section root to tip. If IPL(18) = 0, it is reset to 1. If IPL(18) $<$ 0, the main rotor blade airfoil distribution card, CARD 4G, is read and used to assign the RAA subgroups to Blade Stations No. 1 through No. 20. CARD 4G must be omitted if IPL(18) $\geq$ 0 and must be included if IPL(18) $<$ 0.

IPL(19) controls the steady-state aerodynamics used for the tail rotor in the same manner as IPL(18) controls the main rotor aerodynamics. However, the sign of IPL(19) controls the reading of only the tail rotor airfoil distribution, CARD 5G, and has no effect on CARD 4G, just as IPL(18) has no effect on reading CARD 5G. Note that both IPL(18) and (19) must be less than or equal to IPL(6), the number of RAA subgroups.

IPL(20) controls which option is to be used for rotor unsteady aerodynamics. It is a 0-1-2-3 type switch with the added feature that positive values activate the UNSAN unsteady aerodynamic model for the specified rotor(s) while negative values activate the BUNS unsteady aerodynamic model. See Volume I for discussion of these two models. If IPL(20) = 0, unsteady aerodynamics are ignored in the rotor computations. If an option is activated, it is activated for all blade segments not included in the rotor hub. Even if activated, neither option will affect computation unless the time-variant rotor analysis discussed below is used.

The program includes the option for two basic types of rotor analyses where each type has two possible blade configurations:

Type I: Quasi-static with (A) rigid blades or (B) aeroelastic blades

Type II: Time-variant with (A) rigid blades or (B) aeroelastic blades

IPL(21) specifies the rotor(s) for which the time-variant rotor analysis can be used and operates as a 0-1-2-3 type switch. If IPL(21) = 0, the time-variant analysis (Types IIA and IIB) cannot be used in any part of the program and the value of IPL(22) will be ignored. In this case, both rotors will use the quasi-static analysis (Type IA or IB) for both trim and maneuver. Type IA will be used when no aeroelastic blade data are input (IPL(3) or (4) = 0) and Type IB will be used for a rotor if the blade data are input. If IPL(21) = 1 or 2, the Type II analysis will be used for the specified rotor and Type I will be used for the other rotor. If IPL(21) = 3, the Type II analysis will be used for both rotors. As with IPL(21) = 0, the choice between Type IA and IB and between Type IIA and IIB depends on the availability of aeroelastic blade data. Note that if IPL(21) $\neq$ 0, the stability analysis cannot be performed. That is, NPART must not equal 7, and either the TSTAB group must be omitted or the TSTAB(1) input must be greater than the duration of the maneuver. The TSTAB group is discussed in Section 3.18; also see IPL(14).

If IPL(21) $\neq$ 0, then IPL(22) controls the portion of the program in which the time-variant analysis is to be used for the rotor(s) specified by the IPL(21). Table 3-1 shows the type of rotor analysis used for each rotor as a function of the values of IPL(21) and (22). The azimuth increment to be used in the time-variant portion of a trim is input on CARD 141, XIT(2). See Section 3.13. The azimuth increment for the quasi-static portion of a trim is fixed at 30 degrees. The azimuth (or time) increment used in maneuver is input on CARD 301, TCI(2). See Section 3.20.

The time-variant portion of a quasi-static trim followed by a time-variant trim (a QS-TV trim; IPL(22) = 1) is in essence a time history of five rotor revolutions with the fuselage and control position locked. For each rotor which is time-variant, the additional run time for the time-variant trim after the quasi-static trim will be about the same as the time for a five-rotor-revolution maneuver.

For a fully time-variant trim (IPL(22) = 2), each trim iteration will require about 3 to 6 times the run time of an equivalent quasi-static iteration depending on azimuth increment and whether one or both rotors are time-variant. Additional run time must be allocated accordingly for a fully time-variant trim. However, it cannot be predetermined whether a fully time-variant trim will require more or less iterations than a corresponding quasi-static trim.

TABLE 3-1. ROTOR ANALYSIS USED DURING TRIM AND MANEUVER

Inputs		Rotor	Analysis Used	
IPL(21)	IPL(22)		In Trim	In Maneuver
0	(ignored)	1 (Main) 2 (Tail)	QS QS	QS QS
1	0	1 2	QS-TV QS	TV QS
	1	1 2	QS QS	TV QS
	2	1 2	TV QS	TV QS
2	0	1 2	QS QS-TV	QS TV
	1	1 2	QS QS	QS QS
	2	1 2	QS TV	QS TV
3	0	1 2	QS-TV QS-TV	TV TV
	1	1 2	QS QS	TV TV
	2	1 2	TV TV	TV TV

QS = Quasi-static rotor analysis

TV = Time-variant rotor analysis

QS-TV = Quasi-static trim followed by a time-variant trim. During the time-variant portion of this type trim only the flapping, pylon, and mast windup angles of the time-variant rotor are allowed to vary; the fuselage and control positions are held fixed at the values determined by the quasi-static trim. If both rotors are time-variant, they are trimmed independently of each other.

IPL(23) and IPL(24) control the moment balancing procedures used for the main and tail rotor respectively during each individual trim iteration. Although virtually identical in operation, the two inputs are completely independent of each other. If IPL(23) and IPL(24) = 0, the fully coupled 10 x 10 system of trim equations is used for each trim iteration. For the quasi-static rotor analysis (IPL(21) = 0) this means that the F/A and lateral flapping moments of each rotor are computed only once during a single trim iteration using the current values of cyclic pitch and flapping angles. That is, the rotor moments as calculated are used, and no attempt is made to reduce any moment imbalance during a trim iteration. For the time-variant rotor analysis, IPL(23) and IPL(24) must both be zero. IPL(23) = IPL(24) = 0 is considered the standard procedure for iterating to a trimmed flight condition regardless of the rotor analysis being used.

If the quasi-static rotor analysis is being used, nonzero values of IPL(23) and IPL(24) can be used to decouple sets of rotor flapping moment equations from the standard 10 x 10 system and to activate one of two alternate procedures for reducing the flapping moment imbalances in the uncoupled set(s) of rotor equations. The systems of equations to be used in each trim iteration are given in Table 3-2.

TABLE 3-2. SYSTEMS OF EQUATIONS USED IN TRIM

IPL(23)	IPL(24)	Systems of Equations
= 0	= 0	One 10 x 10 system (both rotors and airframe)
≠ 0	= 0	One 2 x 2 system (main rotor) One 8 x 8 system (tail rotor and airframe)
= 0	≠ 0	One 2 x 2 system (tail rotor) One 8 x 8 system (main rotor and airframe)
≠ 0	≠ 0	Two 2 x 2 systems (one for each rotor) One 6 x 6 system (airframe)

When IPL(23) or IPL(24) is not equal to zero, the sign of the input determines which of the moment balancing procedures is to be used. If the input is greater than zero, flapping angles are locked and cyclic pitch angles are changed to trim the appropriate set(s) of decoupled rotor equations. If the input is less than zero, the cyclic pitch angles are locked and the flapping angles are changed to trim the appropriate set(s) of decoupled rotor equations. The magnitude of the input specifies the maximum number of subiterations, i.e., rotor iterations within the trim iteration, which are permitted to trim the appropriate rotor. A system of decoupled rotor equations is defined to be trimmed when the magnitude of the moment imbalance is less than the allowable error (XIT(20) for the main rotor, XIT(21) for the tail

rotor). Note that IPL(23) and (24) control only rotor moment balancing procedures. The allowable errors for the force and moment summary, XIT(15) through XIT(19), do not affect rotor moment balancing during a single trim iteration.

IPL(25) controls the printout of the trim iterations. If IPL(25) = 0, only the last force and moment summary and the last partial derivatives matrix computed before trim are printed. If IPL(25) = 1, the summary and matrix are printed out for each trim iteration. Since each trim iteration uses one page of computer paper, IPL(25) = 0 can significantly reduce the volume of printed output when many trim cases are being run.

IPL(26) controls the printout of the optional trim page. It is a 0-1-2-3 type switch; e.g., 0 omits the optional page for both rotors and 3 prints one of the optional trim pages for each rotor.

IPL(27) controls printout of blade element aerodynamic (BEA) data for both rotors as follows:

IPL(27) = 0 or 1	No BEA data is printed
= 2	BEA data is printed along with bending moment data at the maneuver time points specified in the Blade Element Data Printout Group. (See Section 3.19.) If no maneuver is computed, IPL(27) = 2 has no effect.
= 3	BEA data is printed after trim and along with bending moment data at the maneuver time points specified in the Blade Element Data Printout Group.

WARNING: IPL(27) should never be set larger than 3 for a normal run. IPL(27) inputs of 4 and 5 are intended only for very detailed diagnostic checks by the programmer; these values will generate huge stacks of output containing data which is not needed for normal runs. For reference only, the effects of values of 4 and 5 are as follows:

IPL(27) = 4	BEA data is printed after trim and at every time point in a maneuver regardless of the value of NPRINT on CARD 01 and the values in the Blade Element Data Printout Group.
= 5	BEA data is printed every trim iteration and every time point in a maneuver. You'll need a wheelbarrow to haul away the output generated by this value of IPL(27).

IPL(28) controls the fuselage degrees of freedom in maneuvers. If IPL(28) = 0, the fuselage has the conventional six degrees of freedom. If IPL(28) $\neq$ 0, all fuselage degrees of freedom are suppressed (locked

out) during maneuvers. Although this input is independent of all other logic inputs, it is normally used only for wind tunnel simulations, e.g., IPL(1), IPL(23), or IPL(24) $\neq$ 0.

CARD 08 Stability Analysis and Miscellaneous Logic

IPL(29), (30), (31), and (32) provide the user with control over the coupling in the stability analysis subroutine, STAB. Some graphical examples of the effect of IPL(29), (30), and (31) on the matrix used in STAB are shown in Figure 3-1. These three switches are completely independent of each other. IPL(29) controls the coupling between the three longitudinal fuselage equations and the three lateral fuselage equations. If IPL(29) = 0, the fuselage is represented by two 3 x 3 matrices. If IPL(29) $\neq$ 0, the fuselage is represented by a 6 x 6 matrix.

IPL(30) controls the rotor dynamic pylon degrees of freedom in STAB. It is a 0-1-2-3 type switch; e.g., zero locks the pylon (F/A and lateral both) of each rotor and three frees both rotor pylons (F/A and lateral). IPL(30) must be compatible with the pylon data read in by IPL(8); i.e., do not attempt to unlock a pylon for which there is no data. As a safeguard, the program resets IPL(30) to zero if IPL(8) $\neq$ 3 and IPL(30) $\neq$ IPL(8).

IPL(31) controls the rotor flapping degrees of freedom in STAB. It is a 0-1-2-3 type switch; e.g., zero locks both rotors and three frees both rotors.

If, for a teetering or gimbaled rotor (XMR(16) or XTR(16) = 0), the flapping degrees of freedom are locked out by IPL(31), these degrees of freedom can be included in the stability derivatives by changing the flapping angles to rebalance the rotors. If IPL(32) = 0, the rotor(s) will be rebalanced; if IPL(32) $\neq$ 0, no rebalancing takes place. For rigid or articulated rotor (XMR(16) or XTR(16) $\neq$ 0), no rebalancing takes place when the flapping degrees of freedom are locked out and the value of IPL(32) is ignored.

IPL(33) controls the option to print or punch on cards the mass, damping, and stiffness matrices used in the stability analysis. The punch option is useful when the user plans to input these matrices to another computer program.

IPL(33) = 0 to print only
1 to punch only
2 to print and punch
3 to suppress print and punch

The form of the punched output is explained in Section 4.11.4.

IPL(34) should always be zero. It is intended for diagnostic use by the programmer only and is discussed in detail only in Volume III.

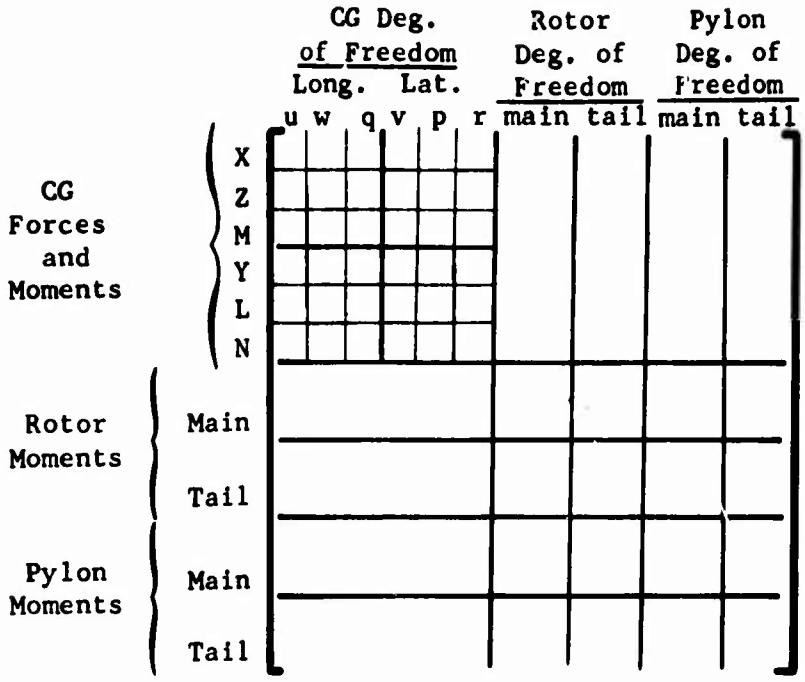

(a) Basic Stability Analysis Matrix

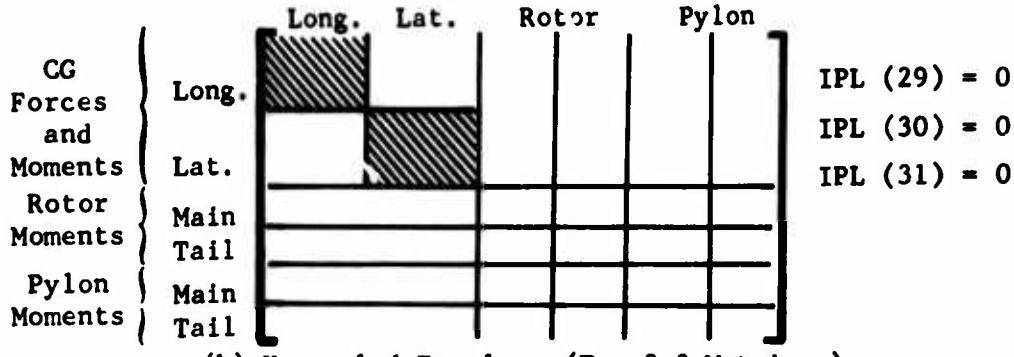

(b) Uncoupled Fuselage (Two 3x3 Matrices)

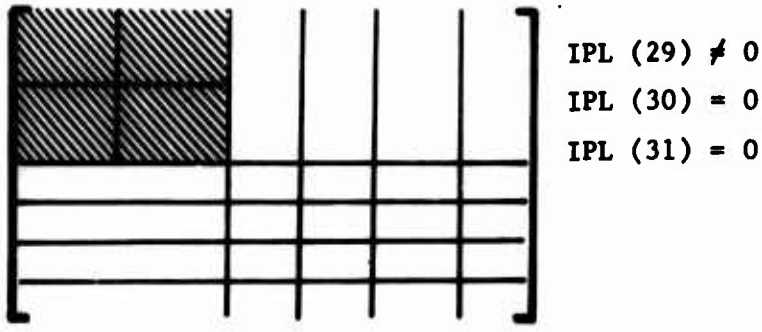

(c) Coupled Fuselage (One 6x6 Matrix)

Note:

Cross-hatched area represents Degrees of Freedom used in each case.

Figure 3-1. Schematic of Matrices Used in the Stability Analysis.

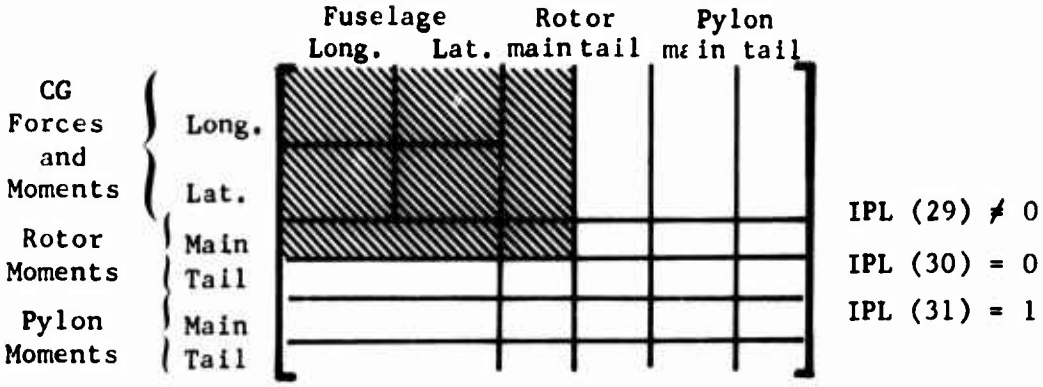

(d) Coupled Fuselage - Main Rotor

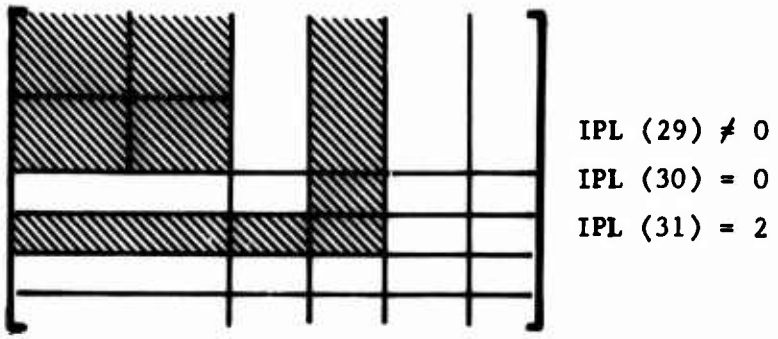

(e) Coupled Fuselage - Tail Rotor

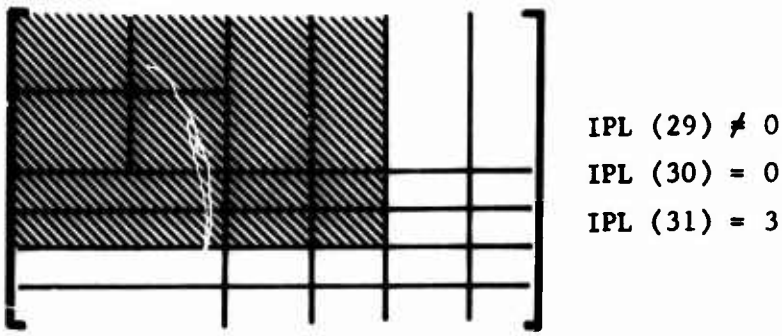

(f) Coupled Fuselage - Both Rotors

Figure 3-1. Continued.

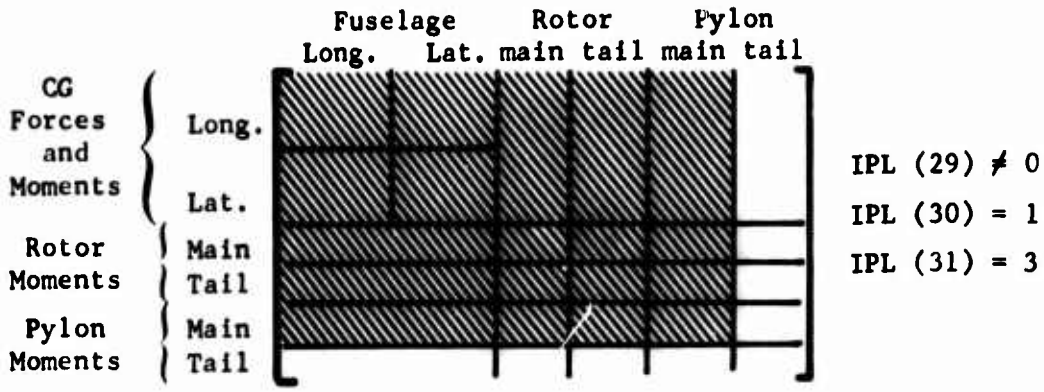

(g) Coupled Fuselage - Both Rotors - Main Pylon

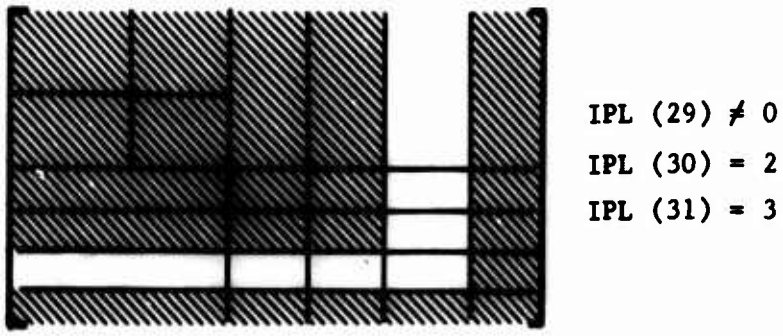

(h) Coupled Fuselage - Both Rotors - Tail Pylon

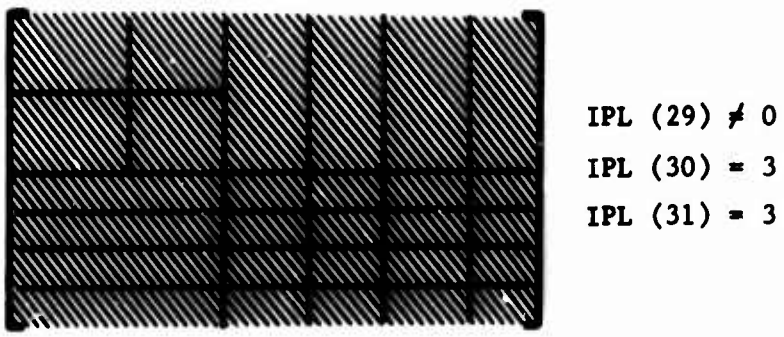

(i) Coupled Fuselage - Both Rotors - Both Pylons

Figure 3-1. Concluded.

IPL(35) is currently inactive.

IPL(36) controls the formal printout of input data which normally precedes the start of the first TRIM iteration. Increased values of IPL(36) progressively suppress more and more data as indicated below:

Value of IPL(36)	Printout Suppressed
= 0	None
$\geq$ 1	All data tables (airfoil, aeroelastic blade, RIVD, and RWAS tables)
$\geq$ 2	All group ID cards (except Program Logic Group) and all input groups (printout of &CHANGE Cards is not suppressed)
$\geq$ 3	Problem heading and identifying comments (from CARDS 02, 03, and 04) when NPART = 10; &CHANGE Card(s) and input data for maneuvers in all cases

Printout of the problem heading, identifying comments, and Program Logic Group ID cannot be suppressed on the first cases in a run because these data are printed before the IPL group is read in. The data deck listing printout at the start of each run is never suppressed. Note that in the second and subsequent cases in a parameter sweep (i.e., when NPART = 10), printout of all data tables is automatically suppressed. To printout the tables in these cases, IPL(36) must be reset to zero in the &CHANGE Card of each case for which the printout is desired.

IPL(37) specifies the number of RWAS (Rotor Wake at Aerodynamic Surfaces) Tables which must be included in the deck. The permissible number of tables is 0 to 12 inclusive. Note that the tables are numbered sequentially on input, and that these sequence numbers are later used to call specific tables. The format for each table is given in Section 3.3.4, and their use is discussed in Section 3.8.1 for the wing and Section 3.9.1.1 for the stabilizing surfaces.

IPL(38), (39), and (40) are currently inactive.

IPL(41) controls the position of the rotor blades for side-by-side folding rotor configurations. It should be input as zero for all other rotor configurations. If IPL(41) = 0, both rotors are defined to be unfolded and turning at the rpm determined by XMR(13) and XFC(25) for Rotor 1 and XTR(13) and XFC(25) for Rotor 2. If IPL(41) $\neq$ 0, the rotors are defined to be stopped and folded; in this case, the data should be set up as if the rotors were unfolded and at normal RPM except that:

(1) IPL(41) $\neq$ 0.0

(2) Controls are locked by setting XCON(4), XCON(11), XCON(18), and SCON(25) $\neq$ 0.0

(3) Maneuver input cards for J = 18 and J = 27 have a time of 0.0, i.e., for J = 18, $\Omega_B > 0$

IPL(42) controls the cg shift with rotor folding. If IPL(42) = 0, no shift is computed; $\neq$ 0, cg shift is computed. This single switch applies to both rotors.

3.3 DATA TABLE GROUP

The Data Table Group does not have a group identification card of its own, i.e., no CARD 10. Rather, each data set included in the group has its own identification card. The data sets which may be included in this group are the Airfoil Data Tables, the Rotor Aeroelastic Blade Data Blocks, the Rotor-Induced Velocity Distribution Data Tables, and Rotor-Induced Velocity Acting at the Aerodynamic Surface Tables.

3.3.1 Airfoil Data Table Sets

The number of airfoil data table sets to be included is specified by IPL(2). IPL(2) may equal 0, 1, 2, 3, 4, or 5. A set of tables for an NACA 0012 airfoil section is compiled within the program and stored in the space allocated for the fifth table. If IPL(2) specifies that five tables are to be read in, the fifth external table will overlay the internal 0012 data.

This internal 0012 table may be used any time four or less airfoil data tables are read in, i.e., IPL(2) = 0, 1, 2, 3, or 4. If not overlaid, the 0012 table or any table which is input can be assigned to any one of the five rotor airfoil aerodynamic subgroups or the five aerodynamic surfaces by use of the 18th aerodynamic input, e.g., YRR(18,1), YRR(18,3), YWG(18), YSTB1(18). Note, however, that data tables for the rotor must be airfoil section (two-dimensional) data while tables for the aerodynamic surfaces must be surface (three-dimensional) data. See Sections 3.5.2 and 3.8.2 for further details on assigning data tables to the rotor and aerodynamic surfaces respectively.

The contents of each data table set are the same:

(1) Identification Card
(2) Title and Control Card
(3) Lift Coefficient Table (at least 3 cards)
(4) Drag Coefficient Table (at least 3 cards)
(5) Pitching Moment Coefficient Table (at least 3 cards)

The specific format for the first two cards of each set is identical while the general format for each of the three tables in any set is the same. Note that angle of attack is the only parameter which ever appears in the first seven-column field on any card in any table.

The Mach number entries in each table must start at zero and be in increasing order of magnitude. Note that if the computed Mach number exceeds the highest Mach number in the table, the table routine extrapolates the data to the computed Mach number.

The card set for the first angle of attack in each table must be for -180 degrees and the last for +180 degrees. Each card set for an angle of attack starts on a new card. In between the card sets for these two angles, the card sets for other angles must be in increasing value of

angle of attack. It is not necessary to have uniform increments between values of angle of attack or Mach number in a table or to have the same angles or Mach numbers in each table. It is assumed that the angle of attack entries in all airfoil data tables are the angles of attack of the chord line of the airfoil section or surface. This assumption should be remembered when developing the inputs for the control system rigging of cambered surfaces.

The minimum value for each of the six integer inputs on the control card (NXL through NZM) is 2. The maximum values of these inputs are defined by the maximum permissible number of entries in a table, i.e.,

Lift Table:	NXL*NZL + NXL + NZL $\leq$ 500
Drag Table:	NXD*NZD + NXD + NZD $\leq$ 1100
Pitching Moment Table:	NXM*NZM + NXM + NZM $\leq$ 575

For example, if the lift table is to have 10 Mach number entries (NZL = 10), then the number of angles of attack must be less than or equal to 44 (44 * 10 + 44 + 10 = 494). The minimum size table (2 by 2) is frequently used to enter a dummy pitching moment coefficient table (C_M = 0 at all Mach numbers). Such a table would require NXM = 2 and NZM = 2 on the Title and Control Card plus the following three cards for the table:

First Card:

Col.	11→20	0.0 (lowest Mach number)
	21→30	1.5 (or any Mach number greater than the expected maximum)

Second Card:

Col.	1→10	-180.0 (minimum angle of attack)
	11→20	0.0 (C_M at α = -180°, M = 0)
	21→30	0.0 (C_M at α = -180°, M = 1.5)

Third Card:

Col.	1→10	180.0 (maximum angle of attack)
	11→20	0.0 (C_M at α = 180°, M = 0)
	21→30	0.0 (C_M at α = 180°, M = 1.5)

3.3.2 Rotor Aeroelastic Blade Data Block

This data block consists of two data sets: one for the main rotor aeroelastic blade and one for the tail rotor aeroelastic blade. If IPL(3) = 0, the main rotor set must be omitted; if IPL(4) = 0, the tail rotor set must be omitted. If IPL(3) or IPL(4) $\neq$ 0, the corresponding data set must be input. Each data set consists of four distributions for the blade: weight, beamwise inertias, chordwise inertias and mode shapes. The distributions are for a blade of twenty equal-length segments, and all distributions are root to tip. All blades of the same rotor are assumed to have identical properties.

The main rotor data set is described below. The tail rotor set is identical in format, differing only in the nomenclature of the arrays, e.g., XTW instead of XMW and XTRMS instead of XMRMS, and the number of mode shapes to be read in, i.e., IPL(4) instead of IPL(3).

The first card of the data set is the identification card. If the data library option is available, the ID card can call a data set from library and the remaining cards must be omitted. If the data library is not used, the ID card must be followed by the four distributions.

CARDS 16/A1, 16/A2, 16/A3

The blade weight distribution inputs, XMW(1) -XMW(20), are defined to be the average values in pounds per inch across each of the twenty equal-length blade segments. The tip weight, XMW(21), is concentrated at the tip of the blade (x/R = 1.0).

CARDS 16/B1, 16/B2, 16/B3, 16/C1, 16/C2, 16/C3

The beamwise mass moments of inertia, XMW(22) -XMW(41), are about the chord line of the airfoil section while the chordwise mass moments of inertia, XMW(43)→XMW(62), are about a line perpendicular to the chord line and located at the half chord of the segment. Normally, the chordwise inertias are much larger than the corresponding beamwise inertias. The units on both are in.-lb-sec^2/in.

CARD SETS 16/D, 16/E, 16/F, 16/G, 16/H, 16/I

These cards contain the coupled blade mode shapes. Exactly IPL(3) sets of mode shape data must be input. Each mode shape (card set) requires twelve cards. The first eleven cards contain 66 numbers with ten columns per number and six values per card (6F10.0 format). These inputs are the out-of-plane, inplane, and torsional components of the normalized mode shape at each of the twenty-one blade stations which are equally spaced from the root to the tip of the blade. (Station No. 0 is the blade root; Station No. 20 is the blade tip.)

The twelfth card contains the data which change the blade natural frequencies as a function of rotor rpm and pitch angle. There are 8 inputs on this card. The first 6 are in 10 column fields, and the last 2 are in 5 column fields (6F10.0, 2F5.0 format). If this card is blank, the natural frequency remains constant at the value input on the eleventh card. As used here pitch angle refers to the pitch angle at zero radius; this is the reference point for all blade pitch angles in C81. The set of data for Mode 1 (CARDS 16/D1 through 16/D12) is detailed in Section 2.3.2.1.4. The sets of data for additional modes use the same input sequence and format as Mode 1. Note that neither mode shape array (XMRMS or XTRMS) is included in the NAMELIST specification statement. Hence, mode shape parameters cannot be changed either when called from the data library or during a sweep case (NPART = 10).

The mode type indicator, XMRMS(65) for Mode 1, is used for gimbaled or teetering rotors to characterize the moment transfer across the rotor hub. See Volume I for a discussion of the four mode types.

Input Value	Mode Type
-2	Independent
-1	Cyclic
0	Scissor
1	Collective

An independent mode responds to all forcing frequencies. The independent mode type is intended to be used for torsional modes primarily. For an articulated or rigid rotor, XMR(16)≠0, the mode type indicator is not used, and any value may be input without effect.

The modal damping ratio is the ratio of the damping to the critical damping. Good data for this input are difficult to find, but the range is generally accepted to be around 0.005 to 0.02.

The input data on the twelfth card of each mode, which changes the natural frequency as a function of blade pitch angle and rpm, is based on plus and minus increments of each variable about some central reference point. The central or reference rpm and pitch angle should be those at which the basic mode shape and frequency were calculated. The high and low values of pitch <u>must</u> be equidistant from the reference value. The same is true of the rpm.

<u>NOTE</u>: It is imperative that the first mode entered be the primary beamwise (flapping) mode characterized by a natural frequency close to one-per-rev. This is necessary for the rotor elastic trim to work properly. Other than the first mode, the order in which the modes are entered is entirely a user option.

3.3.3 Rotor-Induced Velocity Distribution Tables

The induced velocity distribution over each rotor can be computed from either the equation given in Section 3.26.2 or a Rotor-Induced Velocity Distribution (RIVD) table. IPL(5) controls the read-in of RIVD tables and the option of using a table or the equation.

Value of IPL(5)	RIVD Table(s) Required	Effect
0	None	Both rotors use equation
1	Main rotor table only	Main rotor uses table; tail rotor uses equation
2	Tail rotor table only	Main rotor uses equation; tail rotor uses table
3	Both main rotor and tail rotor table	Each rotor uses its respective table

When a table is used, the local induced velocity is computed from the following summation:

$$v_i(\mu,\lambda,r/R,\psi) = \bar{V}_i \left[a(1) + \sum_{n=1}^{NHH} \{a(2n)*\sin(n\psi) + a(2n+1)*\cos(n\psi)\} \right]$$

where

v_i = local induced velocity, ft/sec

$\bar{V}_i$ = average induced velocity over the rotor disc, ft/sec

μ = advanced ratio (velocity in plane perpendicular to rotor shaft/flight path velocity)

λ = average inflow ratio (based on $\bar{V}_i$, parallel to rotor shaft)

r/R = radial blade station (nondimensional)

ψ = blade azimuth angle

$a(i)$ = coefficients of the harmonics (nondimensional)

NHH = order of the highest harmonic

n = summation variable

The coefficients a(i) are computed from the table as functions of μ, λ, and r/R of the appropriate rotor. Note that these coefficients are in effect velocities which have been normalized by $\bar{V}_i$, and that μ and λ are defined in shaft reference.

An RIVD table itself consists of sets of Fourier coefficients which are derived from a curve fit of the above equation to data generated by a rotor wake analysis of the user's choosing. It is emphasized that in preparing a RIVD table the coefficients must be normalized by value of $\bar{V}_i$ which is computed in this program. See Section 3.3.1 of Volume I of this report for the programmed definition of $\bar{V}_i$. The programmer is referenced to Subroutine VIND in the main program where this parameter is computed. Also note that each table must be defined in terms of the μ, λ, and $\bar{V}_i$ of its associated rotor.

Each set of coefficients in the table corresponds to data at specific values of μ, λ, and r/R. The number of sets of coefficients in a table and the number of coefficients in a set are defined by the inputs on the Title and Control Card (CARD 18/A or 19/A). The permissible values of the integer inputs on these cards are:

Number of advance ratios:	$1 \leq NMU \leq 10$
Number of inflow ratios:	$1 \leq NLM \leq 5$
Number of radial stations(NRS):	= 4, 5, 10, or 20
Number of harmonics:	$0 \leq NHH \leq 16$

If NMU or NLM is input as zero, it is reset to unity. If NRS is input as zero, it is reset to 20. Inputs other than zero which are outside these ranges will terminate execution of the program.

The number of coefficients in a set (NCA) is then

$$NCA = 2*NHH + 1$$

which implies

$$1 \leq NCA \leq 33$$

Hence, one RIVD table may then consist of 4 to 1000 sets of 1 to 33 coefficients each (4 to 33,000 total entries).

As indicated above, the number of radial stations (NRS) must be 4, 5, 10, or 20. The radial stations which correspond to these values of NRS are defined in Table 3-3. No other distribution of stations is provided. The program interpolates or extrapolates the input data as required to obtain data at 20 equally spaced radial stations (r/R = 0.05 to 1.0). There are no restrictions on the values or increments

between values which are input to either the advance ratio (WKMU) or inflow ratio (WKLM) array.

TABLE 3-3. RADIAL STATIONS FOR INDUCED VELOCITY DISTRIBUTION TABLE

NRS	Radial Stations: WKRS(1) → WKRS(NRS) 0.0 = root 1.0 = tip
4	.25, .50, .75, 1.0
5	.20, .40, .60, .80, 1.0
10	.10, .20, .30,... .80, .90, 1.0
20	.05, .10, .15, .20,..., .80, .85, .90, .95, 1.0

Once an RIVD table is read into the program and the radial station initiation is performed, the table can be considered to be 20 independent tables where each table is bivariant in μ and λ and corresponds to a particular radial station.

During the rotor computations, a table look-up procedure is then used to obtain the set of coefficients a(i) from the appropriate radial station table. This table look-up procedure performs bivariant interpolation using the computed values of μ and λ whenever both values are within the range of their respective inputs. If a computed value is outside the range of its input, the procedure uses the input value which is closest to the computed value (i.e., the nearest boundary of the table); it does not extrapolate to a computed value. Note that the boundaries of a table can be pictured in a μ-λ plane as a rectangle (when both NMU and NLM are greater than unity), a line (when either NMU or NLM is unity, but the other is not), or a point (when both NMU and NLM are unity). Hence, in the trivial case (NMU = NLM = 1), the coefficients are dependent on radial station but independent of μ and λ. If only one of these control variables is unity, the coefficient will be independent of the associated ratio, but dependent on the other ratio as well as radial station.

With regard to the input format of the sets of coefficients, it should be emphasized that only the constant coefficient is ever input in the first ten-column field on a card; each set must start on a new card. Inputs following the constant are in pairs (the sine and cosine components of the appropriate harmonic). When used, the fourth, seventh, eleventh, thirteenth and sixteenth pairs of harmonic components start on a new card in the <u>second</u> ten-column field (columns 11 through 20 for the sine component). Only the cards necessary to input NHH harmonics are to be included in the sets of cards. For example, if NHH = 8, the fourth through sixth cards described in Section 2.3.3.1.3 must be omitted.

3.3.4 Tables for Rotor Wake at Aerodynamic Surfaces

The wake from each rotor which acts at each aerodynamic surface can be computed from either individual inputs or Rotor Wake at Aerodynamic Surface (RWAS) Tables. Exactly IPL(37) RWAS Tables must be input where $0 \leq IPL(37) \leq 12$. However, RWAS Tables are used only when inputs in the wing and/or stabilizing surface groups specify their use. For the wing these controlling inputs are XWG(29) through XWG(32); for the ith stabilizing input the controlling inputs are XSTBi(29) and XSTBi(32). See Sections 3.8.1 and 3.9.2 for details.

When a table is used, the velocity superimposed on the flow field at an aerodynamic surface due to rotor-induced velocity is computed from the following summation:

$$(v_i)_{jk} = (\bar{V}_i)_k \left[a(1) + \sum_{n=1}^{NHH} a(2n)*\sin(n\psi_k) + a(2n+1)*\cos(n\psi_k) \right]$$

where $(v_i)_{jk}$ = superimposed velocity on the jth surface due to the kth rotor, ft/sec

$(\bar{V}_i)_k$ = average induced velocity across the disk of the kth rotor, ft/sec

$a(i)$ = coefficients of the harmonics (nondimensional functions of μ and λ of the kth rotor)

ψ_k = azimuth angle of Blade 1 of the kth rotor

NHH = order of the highest harmonic

n = summation variable

Note that if the kth rotor uses quasi-static rotor analysis, only the constant term, a(1), is included in the equation (i.e., the value of the summation of the harmonics during a complete rotor revolution is assumed to be zero). The above statement applies to each rotor, independent of the analysis being used on the other rotor.

As implied by the j and k subscripts above, each table is assumed to correspond to the effect a particular rotor has on a particular surface, e.g., the effect of the main rotor on the left wing panel, the tail rotor on Stabilizing Surface No. 3. The twelve possible tables allow input of a separate table for each combination of the two rotors and the six surfaces (two wing panels and four stabilizing surfaces).

It is emphasized that in preparing an RWAS Table the input coefficients must be normalized by the value of $\bar{V}_i$ which is computed in this program for the appropriate rotor. Since inputs to the aerodynamic surface groups noted above can assign any one of the RWAS Tables to simulate the defined effect of that input, care must be exercised to assure that the table used is based on the correct rotor-induced velocity and surface location. For example, XSTB2(32) can be used to specify the table which gives the effect of the tail-rotor-induced velocity on Stabilizing Surface No. 3; the referenced table must then have been normalized by the $\bar{V}_i$ of the tail rotor, and the μ and λ inputs must be for the tail rotor.

The composition of an RWAS Table is essentially the same as an RIVD Table except that the velocity computed from an RWAS Table is not dependent on blade radial station. Hence, each set of coefficients in an RWAS Table corresponds to the wake velocity at specified values of μ and λ and at a specific location with respect to the appropriate rotor. The number of sets of coefficients in a table and the number of coefficients in a set are defined by the inputs on the Title and Control Card. The permissible values of the integer inputs on this card are

Number of advance ratios:	$1 \leq NMU \leq 10$
Number of inflow ratios:	$1 \leq NLM \leq 5$
Number of harmonics:	$0 \leq NHH \leq 7$

If NMU or NLM is input as zero, it is reset to unity. Hence, each RWAS Table may consist of 1 to 50 sets of 1 to 15 coefficients (1 to 350 entries). In all other ways, the format and use of the RWAS Tables are identical to the RIVD Tables.

3.4 FUSELAGE GROUP (include this group only if IPL(1) = 0)

3.4.1 Basic Inputs

CARD 21

Gross weight, XFS(1), is the total weight of the baseline configuration being simulated, i.e., includes the fuselage, pylons, empennage, rotors, fuel, crew, etc. However, this number must not include the weight of external stores included in the Store/Brake Group. Store weight is added to XFS(1) prior to commencing the TRIM procedure.

The Fuselage Data Reference point defines the point of application of body lift, drag, and side force. When the inputs on CARDS 23 through 2E are based on wind tunnel data, the data reference point is the point on the wind tunnel model (in terms of full-scale inches) about which the force and moment data were resolved in data reduction.

CG location is for the total weight of the baseline configuration to be simulated, i.e., XFS(1), with 0 degrees mast tilt, stores off, and rotors unfolded. The cg location is internally recalculated prior to commencing the TRIM procedure for nonzero mast tilt with nonzero rotor nacelle weight, store weights greater than zero, and rotor folding. Note that the longitudinal centerline of the airframe must be buttline zero to be compatible with the aerodynamic surface and jet thrust models. Hence, lateral cg location must be with respect to this line.

CARD 22

Inertias are for the gross weight and cg location input on CARD 21, i.e., the total aircraft less stores. They are internally recalculated when external stores are added by the input data and when they are dropped during a maneuver.

The program contains two models for the fuselage aerodynamic forces and moments:

(1) the Nominal Angle Equation (NAE) model and
(2) the High Angle Equation (HAE) model.

The NAE model provides very precise simulation of wind tunnel data over a limited range of aerodynamic angles while the HAE model is less precise, but provides simulation at all possible aerodynamic angles.

With the equation-use-indicator, XFS(12), and low and high phasing angles, XFS(13) and XFS(14) respectively, the user can specify the flight regime on which the inputs to the NAE model are based and the aerodynamic angles where the program transitions from the NAE model to the phasing region to the HAE model. This option allows the user to obtain the more precise simulation provided by the NAE model in the flight regime for which the most accurate data is available.

The program calculates a complex angle of attack, α_c, which includes both angle of attack and sideslip. In forward flight it is defined as

$$\alpha_c = \cos^{-1} (u/V)$$

where

u = the body axis X velocity
V = the free-stream (flight path) velocity

This angle determines which model is to be used.

For the normal situation when flight test or analytical data are input to the NAE model, the simplest procedure is to set XFS(12), (13), and (14) all to zero. For these inputs, the NAE model will be used only when α_c is less than 15 degrees; the HAE model will be used only when α_c is greater than 35 degrees; and the two models will be phased together when α_c is between 15 and 35 degrees.

When both XFS(13) and (14) are input as zero, the program resets them to 15 and 35 degrees respectively as indicated above. For the case of forward flight inputs to the NAE model, it is only necessary that XFS(12) = 0.0 and XFS(13) be less than XFS(14), not that all three be zero. If the test data input to the NAE model indicates that 15 and 35 are not the best phasing angles, the user should input better ones.

If test or analytical data is available for rearward or sideward flight, it is possible to specify that the NAE model inputs are from one of these flight regimes and that the model should be used in that flight regime.

To specify that the NAE model inputs are in a particular flight regime and are to be used there, use the following guidelines:

Forward Flight:	XFS(12) = 0.0,	|XFS(13)|	<	|XFS(14)|
Rearward Flight:	XFS(12) = 0.0,	|XFS(13)|	≥	|XFS(14)|
Left Sideward Flight:	XFS(12) ≠ 0.0,	|XFS(13)|	<	|XFS(14)|
Right Sideward Flight:	XFS(12) ≠ 0.0,	|XFS(13)|	≥	|XFS(14)|

When XFS(12) = 0.0, the definition of α_c is as above:

$$\alpha_c = \cos^{-1}(u/V)$$

However, when XFS(12) ≠ 0.0, the definition is

$$\alpha_c = \cos^{-1}(-v/V)$$

where v is the body axis Y velocity.

In other words, for XFS(12) = 0.0 (forward or rearward flight), α_c is with respect to the positive body X axis while for XFS(12) $\neq$ 0.0 (sideward flight), α_c is with respect to the negative body Y axis.

The regions where the NAE and HAE models are active and the region where they are phased together are then a function only of the relative magnitudes of XFS(13) and XFS(14).

If $|XFS(13)| < |XFS(14)|$, then only the NAE model is active when

$$0 \leq \alpha_c \geq |XFS(13)|$$

while only the HAE model is active when

$$|XFS(14)| \leq \alpha_c \leq 180$$

and the models are phased together when

$$|XFS(13)| < \alpha_c < |XFS(14)|$$

If $XFS(13) \geq XFS(14)$, then only the NAE model is active when

$$180 \geq \alpha_c \geq |XFS(13)|$$

while only the HAE model is active when

$$|XFS(14)| \geq \alpha_c \geq 0$$

and the models are phased together when

$$|XFS(13)| > \alpha_c > |XFS(14)|$$

The Nominal Angle Equation (NAE) and High Angle Equation (HAE) for a specific force or moment are phased together in the appropriate region by the following relationship:

$$(\text{Force or moment}) = (NAE)*\cos^2(\alpha_{ph}) + (HAE)*\sin^2(\alpha_{ph})$$

where $\alpha_{ph} = 0.5\pi[\alpha_c - XFS(13)]/[XFS(14) - XFS(13)]$

3.4.2 Aerodynamic Forces and Moments

CARDS 23 through 2E contain the coefficients of the High Angle and Nominal Angle Equations. As shown in the input guide (Section 2.4.2), the coefficients for each force and moment are grouped together on sets of two cards each. Most inputs are described as partial derivatives of the force or moment divided by dynamic pressure with respect to θ_w and/or ψ_w. The remaining inputs are angles and semidimensional forces and moments. Since rotorcraft do not have a generally accepted reference area and volume for completely nondimensionalizing fuselage force and moment data, the coefficients are left in units of square feet of force and cubic feet of

moment per degree to a specified power. The per-degree units are used only to give as much physical meaning to the inputs as possible. All inputs with per-degree units are actually coefficients of a sinusoid and are converted to per-radian units by the program. The angles θ_w and ψ_w are the fuselage aerodynamic pitch and yaw angles respectively and are defined as

$$\theta_w = \tan^{-1}(w/u)$$

$$\psi_w = -\sin^{-1}(v/V)$$

where u, v, and w are respectively the x, y, and z body axis components of the free-stream (flight path) velocity V. These are the angles normally recorded from a pyrimidal balance during a wind tunnel test. Note that ψ_w is <u>not</u> sideslip angle. The parameter q in the coefficient descriptions is dynamic pressure

$$q = 0.5\ \rho\ V^2$$

where ρ is the air density.

Tables 3-4 through 3-9 contain the equations for the HAE and NAE models. Each table contains the equations for one of the forces or moments.

These equations were developed to provide very accurate simulation of wind tunnel data. The user is not expected to be able to define all 83 inputs without such test data. In particular, a complete set of inputs for the Nominal Angle Equations requires test data. If wind tunnel data are available, the digital computer program AS812A described in Section 3.26.3 can be used to reduce the test data to coefficients which can be input directly to the program. If such data are not available, the eleven inputs with an asterisk beside them in Section 2.4.2 are considered the minimum necessary inputs. These inputs are XFS(15), (23), (29), (36), (37), (40), (43), (51), (64), (78), and (92). Each is a coefficient in one of the Nominal Angle Equations. By using only these eleven inputs, the user has in effect assumed that all aerodynamic angles in the simulation will be small, i.e., less than 10 to 15 degrees, and that aerodynamic cross-coupling is negligible. Each Nominal Angle Equation which results from using only these eleven inputs is included in the appropriate table with the complete HAE and NAE models (Tables 3-4 through 3-9). The resulting equation is labeled as the Small Angle/Uncoupled Equation. These six equations are basically the same equations used in the AGAJ71 and earlier versions of C81.

When using the Small Angle/Uncoupled Equation, all other inputs to the Nominal Angle Equations may be zero, and XFS(13) should be about 10 to 15 degrees, i.e., the accuracy limit of the input data. If the user is quite certain that α_c will not exceed XFS(13) during any simulation, the inputs to the HAE model may also be zero.

TABLE 3-4. FUSELAGE LIFT EQUATIONS

High Angle Equation

$$L = q(L_1 * \cos^2\psi_w + L_2 * \sin^2\psi_w)$$

where

$$L_1 = \begin{cases} XFS(15) + L_3 * \sin^2\theta_w + L_4 * \sin(2\theta_w) & \text{if } |\psi_w| \le 90^\circ \\ XFS(19) - L_5 * \cos^2\theta_w - L_4 * \sin(2\theta_w) & \text{if } |\psi_w| > 90^\circ \end{cases}$$

$$L_2 = XFS(20) * \cos\theta_w + XFS(57) * \sin\theta_w$$

$$L_3 = XFS(19) - XFS(15)$$

$$L_4 = \frac{[XFS(17) - XFS(15) - L_3 * \sin^2(XFS(18)/RTD)]}{\sin(2 * XFS(18)/RTD)}$$

$$L_5 = XFS(19) - XFS(16)$$

Nominal Angle Equation

$$\begin{aligned} L = q\{&[L_0/q + XFS(21) * RTD * \sin\psi_w + XFS(22) * RTD^2 * \sin^2\psi_w] \\ &+ 0.5 * [XFS(23) * RTD + XFS(24) * RTD^2 * \sin\psi_w \\ &\qquad + XFS(25) * RTD^3 * \sin^2\psi_w] * \sin(2\theta_w) \\ &+ 0.25 * [XFS(26) * RTD^2 + XFS(27) * RTD^3 * \sin\psi_w] * \sin^2(2\theta_w) \\ &+ 0.125 * XFS(28) * RTD^3 * \sin^3(2\theta_w)\} \end{aligned}$$

where

$$L_0/q = \begin{cases} XFS(15) & \text{if } XFS(12) = 0.0 \text{ and } XFS(13) < XFS(14) \\ XFS(16) & \text{if } XFS(12) = 0.0 \text{ and } XFS(13) \ge XFS(14) \\ XFS(20) & \text{if } XFS(12) \ne 0.0 \end{cases}$$

Small Angle/Uncoupled Equation

$$L \approx q(L_0/q + XFS(23) * \theta_w)$$

where L_0/q is defined above

θ_w is in degrees

L = Lift in pounds

XFS(15) through XFS(28) are the inputs on CARDS 23 and 24

RTD = 57.296 (radians to degrees conversion) q = dynamic pressure

TABLE 3-5. FUSELAGE DRAG EQUATIONS

High Angle Equation

$$D = q[D_1 * \cos^2 \psi_w + XFS(31) * \sin^2 \psi_w]$$

where

$$D_1 = D_2 * \cos^2 \epsilon_w + D_v * \sin^2 \epsilon_w$$

$$D_2 = \begin{cases} XFS(29) \text{ if } |\psi_w| \leq 90^\circ \\ XFS(30) \text{ if } |\psi_w| > 90^\circ \end{cases}$$

$$D_v = \begin{cases} XFS(32) \text{ if } \epsilon_w \leq 0 \\ XFS(33) \text{ if } \epsilon_w > 0 \end{cases}$$

Nominal Angle Equation

$$\begin{aligned} D = q\{ & [D_0/q + XFS(35)*RTD*\sin\psi_w + XFS(36)*RTD^2*\sin^2\psi_w] \\ & + [XFS(37)*RTD + XFS(38)*RTD^2*\sin\psi_w + XFS(39)*RTD^3*\sin^2\psi_w]*\sin\epsilon_w \\ & + [XFS(40)*RTD^2 + XFS(41)*RTD^3*\sin\psi_w]*\sin^2\epsilon_w \\ & + XFS(42)*RTD^3*\sin^3\epsilon_w \} \end{aligned}$$

where

$$D_0/q = \begin{cases} XFS(29) & \text{if } XFS(12) = 0 \text{ and } XFS(13) < XFS(14) \\ XFS(30) & \text{if } XFS(12) = 0 \text{ and } XFS(13) \geq XFS(14) \\ XFS(31) & \text{if } XFS(12) \neq 0 \end{cases}$$

Small Angle/Uncoupled Equation

$$D = q[D_0/q + XFS(37)*\epsilon_w + XFS(40)*\epsilon_w^2 + XFS(36)*\psi_w^2]$$

where D_0/q is defined above

ϵ_w and ψ_w are in degrees

D = Drag in pounds

XFS(29) through XFS(42) are the inputs on CARDS 25 and 26

RTD = 57.296 (radians to degrees conversion) q = dynamic pressure

TABLE 3-6. FUSELAGE PITCHING MOMENT EQUATIONS

High Angle Equation

$$M = q[M_1 * \cos^2\psi + M_2 * \sin^2\psi]$$

where

$$M_1 = \begin{cases} XFS(43) + M_3 * \sin^2\theta_w + M_4 * \sin^2\theta_w & \text{if } |\psi_w| \leq 90^\circ \\ XFS(47) - M_5 * \cos^2\theta_w - M_4 * \sin^2\theta_w & \text{if } |\psi_w| > 90^\circ \end{cases}$$

$$M_2 = XFS(85) * \sin\theta_w + XFS(48) * \cos^2\theta_w$$

$$M_3 = XFS(47) - XFS(43)$$

$$M_4 = \frac{[XFS(45) - XFS(43) - M_2 * \sin^2(XFS(46)/RTD)]}{\sin(2 * XFS(46)/RTD)}$$

$$M_5 = XFS(47) - XFS(44)$$

Nominal Angle Equation

$$M = q\{[M_0/q + XFS(49) * RTD * \sin\psi_w + XFS(50) * RTD^2 * \sin^2\psi_w]$$
$$+ 0.5 * [XFS(51) * RTD + XFS(52) * RTD^2 * \sin\psi_w + XFS(53) * RTD^3 * \sin^2\psi_w] * \sin(2\theta_w)$$
$$+ 0.25 * [XFS(54) * RTD^2 + XFS(55) * RTD^3 * \sin\psi_w] * \sin^2(2\theta_w)$$
$$+ 0.125 * XFS(56) * RTD^3 * \sin^3(2\theta_w)\}$$

where

$$M_0/q = \begin{cases} XFS(43) & \text{if } XFS(12) = 0 \text{ and } XFS(13) < XFS(14) \\ XFS(44) & \text{if } XFS(12) = 0 \text{ and } XFS(13) \geq XFS(14) \\ XFS(48) & \text{if } XFS(12) \neq 0 \end{cases}$$

Small Angle/Uncoupled Equation

$$M = q(M_0/q + XFS(51) * \theta_w)$$

where θ_w is in degrees and M_0/q is defined above

M = Pitching Moment in foot-pounds

XFS(43) through XFS(56) are the inputs on CARDS 27 and 28

RTD = 57.296 (radians to degrees conversion) q = dynamic pressure

TABLE 3-7. FUSELAGE SIDE FORCE EQUATIONS

High Angle Equation

$$Y = q[Y_1 * \cos^2 \epsilon_w - XFS(20) * \sin^2 \theta_w]$$

where

$$Y_1 = XFS(57) * \sin \psi_w + Y_2 * \sin(2\psi_w)$$

$$Y_2 = \frac{[XFS(58) - XFS(57) * \sin(XFS(59)/RTD)]}{\sin(2 * XFS(59)/RTD)}$$

Nominal Angle Equation

$$\begin{aligned} Y = q\{ & [XFS(60) + XFS(61) * RTD * \sin \epsilon_w \\ & + XFS(62) * RTD^2 * \sin^2 \epsilon_w + XFS(63) * RTD^3 * \sin^3 \theta_w] \\ & + 0.50 * [XFS(64) * RTD + XFS(65) * RTD^2 * \sin \epsilon_w + XFS(66) * RTD^3 * \sin^2 \epsilon_w] * \sin(2\psi_w) \\ & + 0.25 * [XFS(67) * RTD^2 + XFS(68) * RTD^3 * \sin \theta_w] * \sin^2(2\psi_w) \\ & + 0.125 * [XFS(69) * RTD^3 + XFS(70) * RTD^4 * \sin \epsilon_w] * \sin^3(2\psi_w)\} \end{aligned}$$

Small Angle/Uncoupled Equation

$$Y = q(XFS(64) * \psi_w)$$

where ψ_w is in degrees

Y = Side Force in pounds

XFS(57) through XFS(70) are the inputs on CARDS 29 and 2A

RTD = 57.296 (radians to degrees conversion) q = dynamic pressure

TABLE 3-8. FUSELAGE ROLLING MOMENT EQUATIONS

High Angle Equation

$$\ell = q[l_1 * \cos^2\epsilon_w + XFS(71) * \sin^2\theta_w]$$

where $l_1 = XFS(71) * \sin\psi_w + l_2 * \sin(2\psi_w)$

$$l_2 = \frac{[XFS(72) - XFS(71) * \sin(XFS(73)/RTD)]}{\sin(2 * XFS(73)/RTD)}$$

Nominal Angle Equation

$$\begin{aligned}\ell = q\{&[XFS(74) + XFS(75) * RTD * \sin\epsilon_w \\ &\quad + XFS(76) * RTD^2 * \sin^2\epsilon_w + XFS(77) * RTD^3 \sin^3\epsilon_w] \\ &+ 0.5 * [XFS(78) * RTD + XFS(79) * RTD^2 * \sin\epsilon_w + XFS(80) * RTD^3 * \sin^2\epsilon_w] * \sin(2\psi_w) \\ &+ 0.25 * [XFS(81) * RTD^2 + XFS(82) * RTD^3 * \sin\epsilon_w] * \sin^2(2\psi_w) \\ &+ 0.125 * [XFS(83) * RTD^3 + XFS(84) * RTD^4 * \sin\epsilon_w] * \sin^3(2\psi_w)\}\end{aligned}$$

Small Angle/Uncoupled Equation

$$\ell = q(XFS(78) * \psi_w)$$

where ψ_w is in degrees

ℓ = Rolling Moment in foot-pounds

XFS(71) through XFS(84) are the inputs on CARDS 2B and 2C

RTD = 57.296 (radians to degrees conversion) q = dynamic pressure

TABLE 3-9. FUSELAGE YAWING MOMENT EQUATIONS
High Angle Equation $N = q[N_1 * \cos^2 \theta_w - XFS(48) * \sin^2 \theta_w]$ where $N_1 = XFS(85) * \sin \psi_w + N_2 * \sin(2\psi_w)$ $N_2 = \dfrac{[XFS(86) - XFS(85) * \sin(XFS(87)/RTD)]}{\sin(2 * XFS(87)/RTD)}$
Nominal Angle Equation $N = q\{[XFS(88) + XFS(89) * RTD * \sin \theta_w + XFS(90) * RTD^2 * \sin^2 \theta_w + XFS(91) * RTD^3 * \sin^3 \theta_w]$ $+ 0.5 * [XFS(92) * RTD + XFS(93) * RTD^2 * \sin \theta_w + XFS(94) * RTD^3 * \sin^3 \theta_w] \sin(2\psi_w)$ $+ 0.25 * [XFS(95) * RTD^2 + XFS(96) * RTD^3 * \sin \theta_w] \sin^2(2\psi_w)$ $+ 0.125 * [XFS(97) * RTD^3 + XFS(98) * RTD^4 * \sin \theta_w] \sin^3(2\psi_w)\}$
Small Angle/Uncoupled Equation $N = q(XFS(92) * \psi_w)$ where ψ_w is in degrees
N = Yawing Moment in foot-pounds XFS(85) through XFS(98) are the inputs on CARDS 2D and 2E RTD = 57.296 (radians to degrees conversion) q = dynamic pressure

When the HAE model is needed, the inputs should be based on wind axis test data where the model was yawed to $\psi_W = \pm 180$ degrees at $\theta_W = 0$ and pitched to $\theta_W = \pm 90$ degrees at $\psi_W = 0$. If such data are not available, most of the inputs can be determined by estimating the fuselage drag and aerodynamic center location for sideward and vertical flight. The drag times the moment arms of the aerodynamic center about the data reference point will provide reasonable values for most of the moment inputs to the HAE model. Extrapolation of any available test data for a similar configuration could also be used.

3.5 ROTOR AERODYNAMIC GROUP

This group is composed of not more than five Rotor Airfoil Aerodynamic (RAA) subgroups, which are numbered sequentially on input. IPL(6) in the Program Logic Group specifies the number of subgroups to be input. If both rotor groups all deleted (IPL(7) = 3), it is not necessary to read any RAA subgroups (IPL(6) = 0); however, if IPL(7) $\neq$ 3, at least one subgroup is required and a zero input for IPL(6) will be reset to one.

Each subgroup consists of five cards which contain the YRR inputs. In the YRR(I,J) array, I is the sequence number of the inputs for one subgroup (I = 1 through 35) and J is the sequence number of the subgroup (J = 1 through 5). The data sequence for Subgroup No. 1 is given in Section 2.5.1. Inputs for other subgroups are in the identical sequence and format as for Subgroup No. 1. Each subgroups represents one airfoil section and is independent of all other RAA subgroups.

Normally, only one or two subgroups are needed: one for the main rotor and possibly a different one for the tail rotor. The additional subgroups are included so that blades which have a variable airfoil section along their span can be modeled. IPL(18) and (19) in the Program Logic Group control the option for variable airfoil sections along the blades for the main rotor and tail rotor respectively. If the option is activated, an airfoil section distribution for the appropriate rotor is read. This distribution specifies which RAA subgroup is to be used at Blade Stations No. 1 through No. 20. See the discussion of IPL(18) and (19) on CARD 07 and IDTABM(1-20) on CARD 4G for additional details.

In the following discussion, Y(I) refers to the Ith input of a subgroup, e.g., Y(18) is YRR(18,K), where K indicates the sequence number of the subgroup. In addition, X(J) refers to the Jth input of the Main or Tail Rotor Group, e.g., X(29) is XMR(29) or XTR(29), depending on which rotor contains the blade segment of interest.

3.5.1 Aerodynamic Options

The inputs to the RAA subgroups are used by the CDCL subroutine to compute the steady-state coefficients of airfoil section lift, drag, and pitching moment at Blade Stations No. 1 through No. 20 as functions of the local angle of attack, α, and Mach number, M. The program also includes two independent models for computing the effects of yawed flow. Each model is associated with one of the two models for unsteady aerodynamics: BUNS and UNSAN. The BUNS yawed flow model is controlled by Y(28) and the UNSAN by Y(33).

Y(28) is the maximum value for the yawed flow angle in the BUNS model. The angle is in degrees, and an input of zero effectively deactivates the model. The value of this input does not affect Y(33).

Y(33) acts as a switch for the UNSAN model only and is interpreted as follows:

0 = off

1 = active for lift only

2 = active for drag only

3 = active for both

The program includes logic which prevents both yawed flow models being activated simultaneously when the unsteady aerodynamic options are off (IPL(20) = 0). When one of the unsteady options is on, the logic also assumes that only the yawed flow associated with the unsteady model activated by IPL(20) can be used. See Table 3-10.

TABLE 3-10. RELATIONSHIP OF UNSTEADY AND YAWED FLOW MODELS

Unsteady Model	Value of IPL(20)	Effect of Unsteady Model on Yawed Flow Model		
		BUNS Model Y(28)	UNSAN Model Y(33)	Description of the Effect
BUNS	< 0	None	Y(33) reset to zero	UNSAN model turned off; BUNS model may be on or off
None	= 0	Y(28) reset to zero if Y(33) > 0	None	Either model may be used; BUNS model turned off if UNSAN model turned on
UNSAN	> 0	Y(28) reset to zero	None	BUNS model turned off; UNSAN model may be on or off

The BUNS and UNSAN unsteady aerodynamic models and the UNSAN yawed flow model are discussed in Section 3.3.5 of Volume I. In essence, both unsteady models are very similar in that each computes increments to the aerodynamic coefficients which are added to the steady-state values. The following section describes how the CDCL computes the steady-state coefficients using the BUNS yawed flow model.

3.5.2 Steady-State Aerodynamic Coefficients

The steady-state aerodynamic coefficients may be either computed from equations which use the YRR inputs or interpolated from data tables. The control variable Y(18) specifies which method is to be used. The basic independent variables used by both the equations and the table look-up procedure are angle of attack and Mach number. A complete discussion of

Y(18) is found at the end of this section. It is mentioned here primarily to caution the user that even though a table look-up procedure is used, many of the data for the equations must be entered as realistic values if either unsteady aerodynamic option is used. The variables which fall into this category are Y(1) through Y(11), Y(17), Y(20), Y(21), and Y(29) through Y(32).

The calculation of the steady state aerodynamic coefficients is the same at all blade stations with two exceptions. Near the blade root the computations are modified for hub extent as discussed in the Main Rotor Group. At the blade tip, sweep and shift of the aerodynamic center are accounted for in the following manner.

The tip sweep angle input, X(29), is used to modify the radial and tangential velocity components impinging on the outermost 5% of the rotor blade. The sweep angle is the amount the leading edge is swept back with respect to the blade pitch-change axis. Tip sweep may cause the blade aerodynamic center to be shifted aft by an amount X(30). The pitching moment caused by lift force is then modified by the revised moment arm. A more complete explanation of the tip sweep equations is given in Section 3.3.4.3 of Volume I of this report.

The equations and logic checks used for all other blade segments are given below. The initial step is to determine the effective Mach number and angle of attack.

Let the local velocity components U_T, U_P, and U_R be the tangential, perpendicular, and radial velocities, respectively. Then the yawed flow angle is

$$\Lambda = [\mathrm{Min}\,\{Y(28),\ |\tan^{-1}(U_R/U_T)|\}] * \mathrm{sign}\,[\tan^{-1}(U_R/U_T)]$$

and an effective Mach number is defined as

$$M = (V/V_{sound})[\cos Y(20)\ \Lambda]^{Y(21)}$$

where

$$V = [U_R^{\ 2} + U_T^{\ 2} + U_P^{\ 2}]^{1/2}$$

and

V_{sound} = Speed of sound as computed from XFC(26), (27), and (28)

This form of the Mach number expression is developed in Volume I of this report. Suggested values for Y(20) and Y(21) are 0.2 and 1.0 (or 1.0 and 0.5) respectively as discussed in Section 3.3.4.1 of Volume I.

The angle of attack of the blade segment, α, is defined by

$$\alpha = \theta + \alpha_o + \phi$$

and it is assumed that

$$-180^\circ > \alpha \geq 180^\circ$$

In the equation for α, θ is the local pitch, or feathering, of the chord line of the appropriate blade station. It is determined from control system geometry, blade geometry, and elastic blade deflections, from the equation given in the discussion of CARD 47.

The term α_o is the angle between the chord line and the zero lift line of the segment. When equations are used to compute the aerodynamic coefficients,

$$\alpha_o = Y(29) + Y(30)M + Y(31)M^2 + Y(32)M^3$$

When data tables are used, α_o is defined as zero since the data tables are assumed to be a function of chord line angle of attack. However, if the UNSAN unsteady aerodynamic option is activated (IPL(20) > 0) and data tables are used, the values of Y(29) through Y(32) must be realistic inputs since they are used in the UNSAN analysis and are not computed from the tables.

The term ϕ is the local inflow angle, and is normally negative.

$$\phi = \tan^{-1}(U_P/U_T)$$

Hence, when equations are used, α is the angle of attack of the zero lift line and when data tables are used, it is the angle of attack of the airfoil section chord line.

For rotors with cambered airfoils where the chord line and zero lift line are not coincident, it is advisable to use data tables rather than equations to compute the aerodynamic coefficients. The mathematical model described by the equations was originally developed for symmetric airfoils exclusively. In most cases it is only marginally adequate for modeling the asymmetric stall characteristics about the zero lift line, the shift in zero lift line orientation in reversed flow, and the variations of coefficients with Mach number associated with cambered

rotor airfoil sections. Hence, if the user wishes to model cambered airfoil sections with equations, the flight conditions should be restricted to those where rotor stall is not significant and the reversed flow region is small, e.g., low blade loading coefficient (t_c) and low advance ratio (μ).

A modified angle of attack is then computed from

$$\alpha_1 = \begin{cases} \alpha \cos \Lambda & \text{if } |\alpha| < 90^\circ \\ \alpha & \text{if } |\alpha| > 90^\circ \end{cases}$$

If Y(18) indicates that the table look-up procedure is to be used, the procedure is entered at this point with the above values of α_1 and M, and returns the interpolated values of the aerodynamic coefficients. The lift coefficient is then divided by cos Λ and all three coefficients are returned to the subroutine which called CDCL.

If Y(18) indicates that equations are to be used, the next step is to determine the lift curve slope of the airfoil at the current Mach number.

The input value of the Mach number at the lower boundary of the supersonic region, Y(2), is checked against a calculated value, M_{sc}, to determine the value of the lower boundary to be used, M_s.

$$M_s = \text{Max}\ \{Y(2),\ M_{sc}\}$$

The expression for M_{sc} is obtained by assuming that the slope of the lift curve at the critical Mach number, Y(1), is equal to the slope of the lift curve at M_{sc}.

The equation for the slope of the lift curve takes one of three forms, depending on whether the Mach number is subsonic, transonic, or supersonic.

$$a_1 = Y(8) + Y(9)M + Y(10)M^2 + Y(11)M^3 \qquad \text{(subsonic)}$$

$$a_2 = B_0 + B_1M + B_2M^2 \qquad \text{(transonic)}$$

$$a_3 = 4/(57.3\sqrt{M^2 - 1}) \qquad \text{(supersonic)}$$

Since the critical Mach number is subsonic, the slope of the lift curve at M = Y(1) is

$$(a_1)_{CR} = Y(8) + Y(9)*Y(1) + Y(10)*Y(1)^2 + Y(11)*Y(1)^3$$

If $M = M_{sc}$ in the equation for the supersonic lift curve slope, a_3, and $a_3 = (a_1)_{CR}$, then

$$M_{sc} = \sqrt{1 + (0.0698/(a_1)_{CR})^2}$$

Then the final selection for the slope of the lift curve, a, is made:

$$a = \begin{cases} a_1 & \text{if } M < Y(1) \\ a_2 & \text{if } Y(1) \leq M < M \\ a_3 & \text{if } M_s \leq M \end{cases}$$

The coefficients B_0, B_1, and B_2 in the equation for a_2 are computed internally by matching end points with a_1 and a_3 and the slope of a_3.

$$a_2 = a_1 \qquad \text{at } M = Y(1)$$

$$\left.\begin{aligned} a_2 &= a_3 \\ \frac{da_2}{dM} &= \frac{da_3}{dM} \end{aligned}\right\} \qquad \text{at } M = M_s$$

Next a test is made on α to see if the airfoil is in normal or reversed flow. Several intermediate variables in the calculation of lift coefficient are set according to the results. The angle of attack, α, is further resolved to be between plus and minus ninety degrees in either case.

If $|\alpha_1| \leq 90°$,

$$\alpha = |\alpha_1|$$

$$C_{L_0} = Y(3)$$

$$K_L = Y(4)M + Y(5)M^2 + Y(6)M^3$$

$$\alpha_B = [(C_{L_0} + K_L)/a] + 5°$$

If $|\alpha_1| > 90°$,

$$\alpha = 180° - |\alpha_1|$$

$$C_{L_0} = Y(7)$$

$$K_L = 0$$

$$\alpha_B = [C_{L_0}/a] + 5°$$

The C_L versus α curve has the form shown in Figure 3-2. At the point P_1 in Figure 3-2,

$$C_L = C_{L_0} + K_L$$

$$\alpha = C_L/a = \alpha_S$$

At P_2 in Figure 3-2,

$$\alpha = \alpha_B$$

Linear interpolation is used to evaluate C_L for points between P_1 and P_2.

For $\alpha_B \leq \alpha \leq 90°$,

$$C_L = [\{1.876 \sin \alpha - (.581)\} K + 0.81] \cos \alpha$$

where

$$K = \begin{cases} 1 + 0.25M^4 & \text{if } M \leq 1 \\ 0.85 + 0.082/[M-0.8] & \text{if } M > 1 \end{cases}$$

The form of the C_D versus α curve is shown in Figure 3-3. At the point P_3 in Figure 3-3, $\alpha = \alpha_X$ and $C_D = C_{D_X}$, where either $\alpha_X = \alpha_s$ and $C_{D_X} < Y(16)$, or $\alpha_X < \alpha_s$ and $C_{D_X} = Y(16)$.

For $M < Y(2)$, i.e., below the supersonic region, the drag coefficient expression used depends on the value of α.

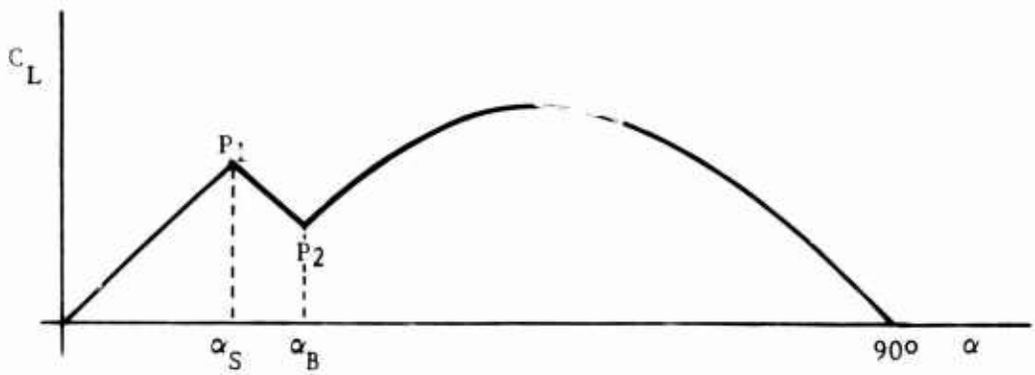

Figure 3-2 General Lift Coefficient Versus Angle of Attack Curve.

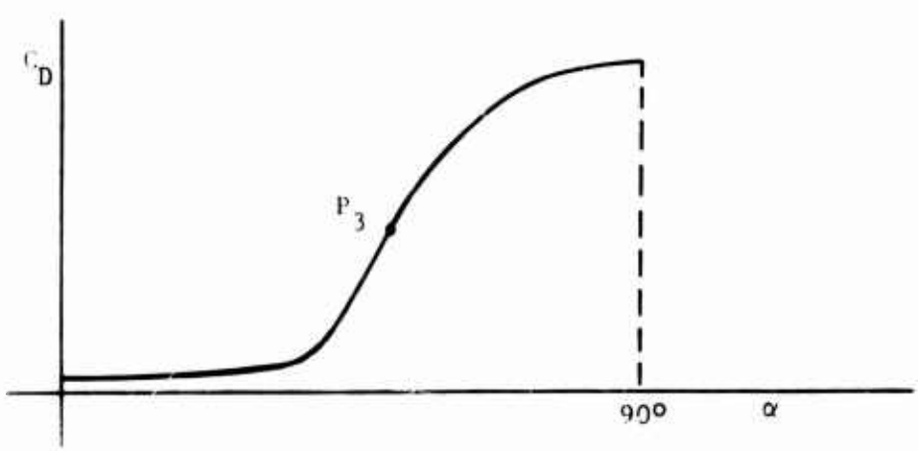

Figure 3-3. General Drag Coefficient Versus Angle of Attack Curve.

For $0 \leq \alpha \leq \alpha_X$,

$$C_D = \text{Min} \left\{ Y(16), \left(Y(12) + Y(13)\alpha + Y(14)\alpha^2 + \text{Max}\left\{0,\ Y(19)\alpha - Y(1) + \text{Max}[M,\ 0.35]\right\}\right)\right\}$$

NOTE: In this drag equation, α is the angle of attack with respect to the airfoil section zero lift line. Hence, for cambered airfoil sections where chord line and zero lift line are not coincident, care should be taken that the coefficients Y(12), (13), and (14) are referenced to the zero lift line rather than the chord line.

The drag rise coefficient, Y(19), was formerly included in the computer program with a constant value, 0.0332 per degree. If Y(19) is input as zero, it is reset to 0.0332.

For $\alpha_X \leq \alpha \leq 90^\circ$ or $C_D \leq C_{D_X}$,

$$C_D = K_4 \sin^2 \alpha + (C_{D_X} - K_4 \sin^2 \alpha_X) \cos \alpha / \cos \alpha_X$$

where $K_4 = 2.1\ K$.

In the supersonic region, $M \geq M_s$

$$C_D = \text{Min} \left\{ Y(16), \left(Y(12) + 4[(\alpha/57.3)^2 + Y(15)]/\sqrt{M^2 - 1} \right) \right\}$$

The calculation of steady-state pitching moment coefficients is best understood by following the logic flow chart in Figure 3-4, which is repeated from Volume I. The procedure was developed in order to curve fit C_M versus α curves at various Mach numbers such as those sketched in Figure 3-5. The symbols used in the flow chart are defined in terms of the inputs below. Reasonable values of the inputs for an NACA 0012 airfoil section are listed in brackets.

$A_1 = Y(22)$	[-.002488]
$A_2 = Y(23)$	[-.009456]
$A_3 = Y(24)$	[.82]
$A_4 = Y(25)$	[0.0]

The inputs Y(22), Y(23), and Y(24) are coefficients for a quadratic function of α determining the corresponding value of Mach number at which the C_M curve breaks sharply away from the input constant value, Y(25).

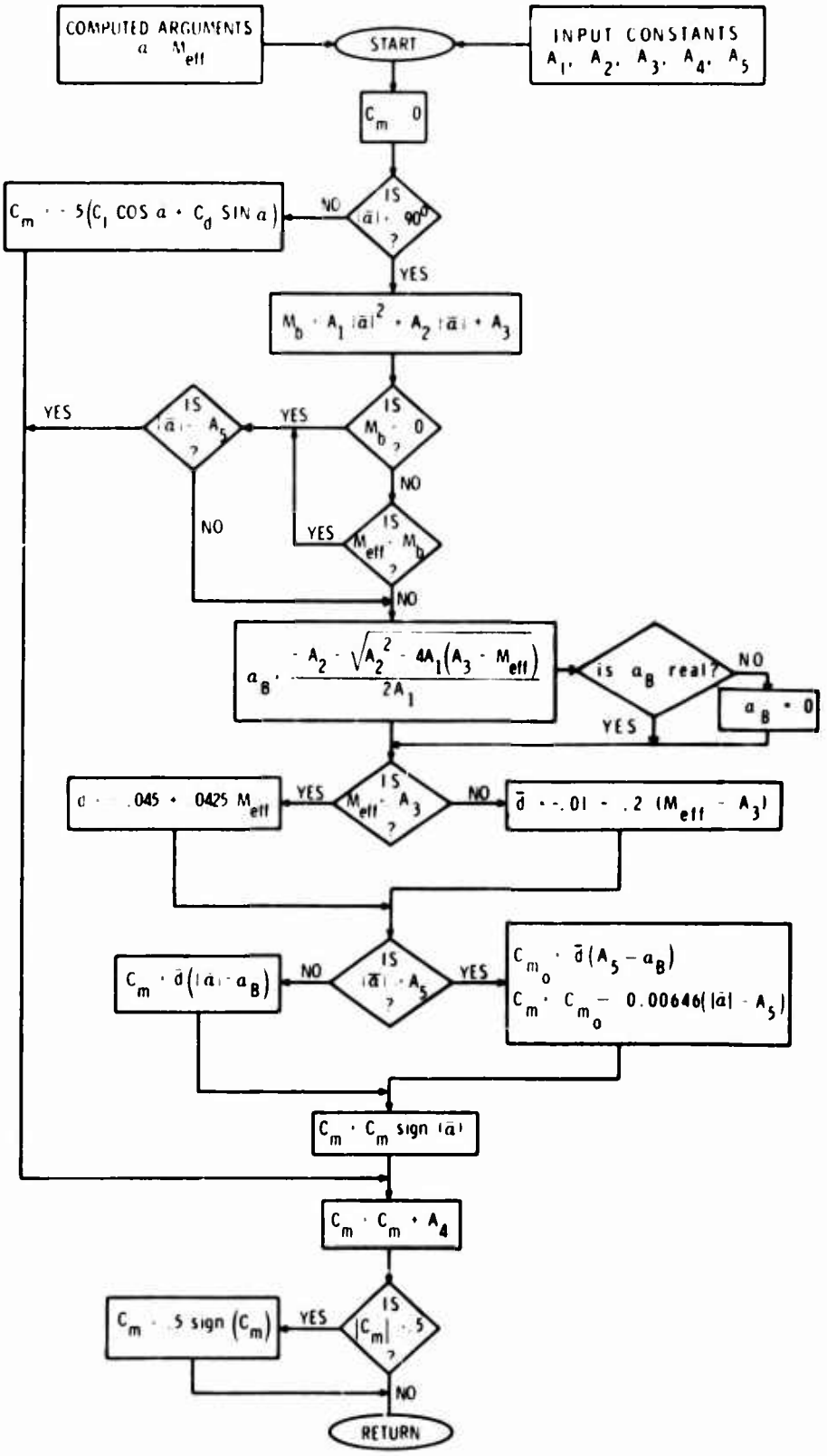

Figure 3-4. Flow Chart for Steady-State Pitching Moment Calculation.

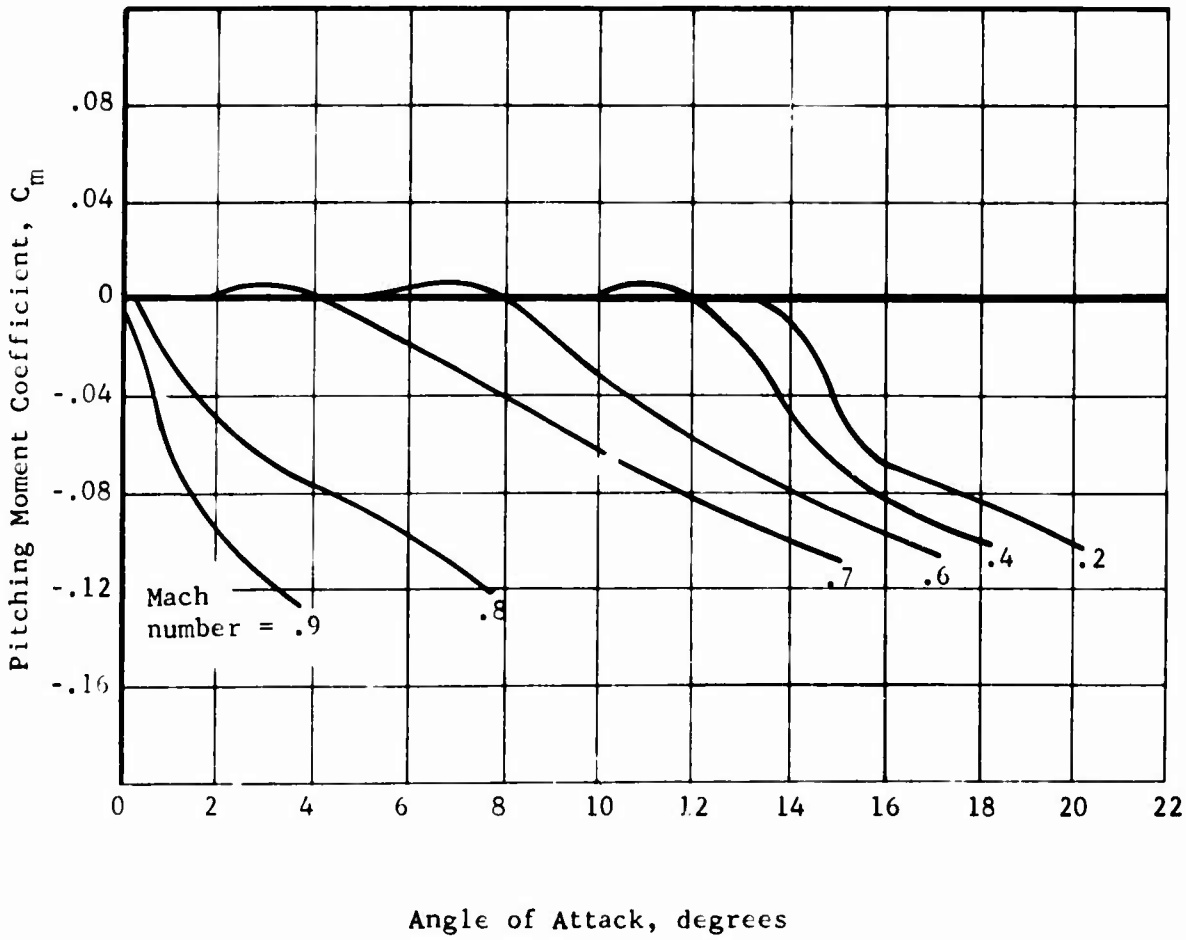

Figure 3-5. Typical Curves of Pitching Moment Coefficient Versus Angle of Attack at Various Mach Numbers.

For $|\alpha| < 90°$, the first series of calculations and tests is to determine the relative sizes of $|\alpha|$, the angle of attack, α_B, corresponding to $M_{eff} = M$ on the "break" curve mentioned previously, and A_5, the critical value of the α defined by the "break" curve for $M = 0$. The evaluation of C_M is different for $0 \leq \alpha \leq \alpha_B$, $\alpha_B < \alpha \leq A_5$, and $A_5 < \alpha < 90°$.

For α less than α_B,

$$C_M = Y(25)$$

For α between α_B and A_5, a slope, $\bar{d}$, is computed for the C_M line between α_B and A_5. This slope depends on M_{eff} and an input critical value, Y(24), which is the point on the "break" curve for $\alpha = 0$. The pitching moment coefficient is calculated from

$$C_M = (|\alpha| - \alpha_B)\bar{d} \ \mathrm{sign}(\alpha) + Y(25)$$

If $|\alpha|$ is greater than A_5, a second slope included in the program is used.

$$C_M = (A_5 - \alpha_B)\bar{d} - 0.00646\ (|\alpha| - A_5)\ \mathrm{sign}\ (\alpha) + Y(25)$$

For $|\alpha| \geq 90°$, the aerodynamic center is assumed to be located at the 0.75 chord rather than at the 0.25 chord. The pitching moment about the blade neutral axis (assumed to be at the 0.25 chord) is in this case mainly due to lift and drag forces. Hence,

$$C_M = -0.5(C_L \cos \alpha + C_D \sin \alpha) + Y(25)$$

As shown in the flow diagram (Figure 3-4), the absolute value of C_M is limited not to exceed 0.5 in all cases.

NOTE: The control variable for use of C_L, C_D, and C_M tables, Y(18), operates as follows:

(1) If Y(18) = 0, the aerodynamic coefficients are computed from the above equations using the YRR inputs.

(2) If Y(18) > 0, the Y(18)th Airfoil Data Table included in the Data Table Group will be used to compute the steady-state aerodynamic coefficients. Note that a set of data tables for the NACA 0012 airfoil is stored permanently in Airfoil Data Table No. 5. These tables are shown in Figure 3-6. See Data Table Group for additional details.

NACA 0012 AIRFOIL CLCD DATA TABLES USED

CL

ALPHA/MACH	0.0	0.20000	0.30000	0.40000	0.50000	0.60000	0.70000	0.75000	0.80000	0.90000	1.00000
-180.00000	0.0	0.0	0.0	0.0	0.0	0.0	0.0	0.0	0.0	0.0	0.0
-172.50000	0.78000	0.78000	0.78000	0.78000	0.78000	0.78000	0.78000	0.78000	0.78000	0.78000	0.78000
-161.00000	0.62000	0.62000	0.62000	0.62000	0.62000	0.62000	0.62000	0.62000	0.62000	0.62000	0.62000
-147.00000	1.00000	1.00000	1.00000	1.00000	1.00000	1.00000	1.00000	1.00000	1.00000	1.00000	1.00000
-129.00000	1.00000	1.00000	1.00000	1.00000	1.00000	1.00000	1.00000	1.00000	1.00000	1.00000	1.00000
-49.00000	-1.18000	-1.18000	-1.18000	-1.18000	-1.18000	-1.18000	-1.18000	-1.18000	-1.18000	-1.18000	-1.18000
-39.00000	-1.18000	-1.18000	-1.18000	-1.18000	-1.18000	-1.18000	-1.18000	-1.18000	-1.18000	-1.18000	-1.18000
-21.00000	-0.80000	-0.80000	-0.81000	-0.83000	-0.85000	-0.85000	-0.85000	-0.71000	-0.68000	-0.64000	-0.64000
-16.50000	-1.00700	-1.00700	-0.94400	-0.96000	-0.96500	-0.96500	-0.96500	-0.79500	-0.76000	-0.70000	-0.70000
-15.00000	-1.19000	-1.19000	-1.09000	-1.05500	-0.99000	-0.98000	-0.98000	-0.83000	-0.79000	-0.72000	-0.72000
-14.00000	-1.33300	-1.33300	-1.22000	-1.09600	-1.00000	-0.97000	-0.97000	-0.84000	-0.80500	-0.73000	-0.73000
-13.00000	-1.33400	-1.33400	-1.28000	-1.12000	-1.00000	-0.96000	-0.96000	-0.85000	-0.81500	-0.73500	-0.73500
-12.00000	-1.25500	-1.25500	-1.26000	-1.13000	-1.00000	-0.94700	-0.94000	-0.85000	-0.82000	-0.74000	-0.74000
-11.00000	-1.16100	-1.16100	-1.19000	-1.12000	-0.99400	-0.93000	-0.92300	-0.85000	-0.81000	-0.74000	-0.74000
-10.00000	-1.05500	-1.05500	-1.01000	-1.08200	-0.98500	-0.91000	-0.90000	-0.84500	-0.80500	-0.73000	-0.73000
-8.00000	-0.84400	-0.84400	-0.88000	-0.90700	-0.92200	-0.87000	-0.84000	-0.82000	-0.77000	-0.69500	-0.69500
-6.00000	-0.63300	-0.63300	-0.66000	-0.68400	-0.74100	-0.77000	-0.75000	-0.77000	-0.72500	-0.59300	-0.59300
-4.00000	-0.42200	-0.42200	-0.44000	-0.45600	-0.49400	-0.54400	-0.57800	-0.62700	-0.60300	-0.39600	-0.39600
-2.00000	-0.21100	-0.21100	-0.22000	-0.22800	-0.24700	-0.27200	-0.31300	-0.35000	-0.39500	-0.20000	-0.20000
0.0	0.0	0.0	0.0	0.0	0.0	0.0	0.0	0.0	0.0	0.0	0.0
2.00000	0.21100	0.21100	0.22000	0.22800	0.24700	0.27200	0.31300	0.35000	0.39500	0.20000	0.20000
4.00000	0.42200	0.42200	0.44000	0.45600	0.49400	0.54400	0.57800	0.62700	0.60300	0.39600	0.39600
6.00000	0.63300	0.63300	0.66000	0.68400	0.74100	0.77000	0.75000	0.77000	0.72000	0.59300	0.59300
8.00000	0.84400	0.84400	0.88000	0.90700	0.92200	0.87000	0.84000	0.82000	0.77000	0.69500	0.69500
10.00000	1.05500	1.05500	1.01000	1.08200	0.98500	0.91000	0.90000	0.84500	0.80500	0.73000	0.73000
11.00000	1.16100	1.16100	1.19000	1.12000	0.99400	0.93000	0.92300	0.85000	0.81000	0.74000	0.74000
12.00000	1.25500	1.25500	1.26000	1.13000	1.00000	0.94700	0.94000	0.85000	0.82000	0.74000	0.74000
13.00000	1.33400	1.33400	1.28000	1.12000	1.00000	0.96000	0.96000	0.85000	0.81500	0.73500	0.73500
14.00000	1.33300	1.33300	1.22000	1.09600	1.00000	0.97000	0.97000	0.84000	0.80500	0.73000	0.73000
15.00000	1.19000	1.19000	1.09000	1.05500	0.99000	0.98000	0.98000	0.83000	0.79000	0.72000	0.72000
16.50000	1.00700	1.00700	0.94400	0.96000	0.96500	0.96500	0.96500	0.79500	0.76000	0.70000	0.70000
21.00000	0.80000	0.80000	0.81000	0.83000	0.85000	0.85000	0.85000	0.71000	0.68000	0.64000	0.64000
39.00000	1.18000	1.18000	1.18000	1.18000	1.18000	1.18000	1.18000	1.18000	1.18000	1.18000	1.18000
49.00000	1.18000	1.18000	1.18000	1.18000	1.18000	1.18000	1.18000	1.18000	1.18000	1.18000	1.18000
129.00000	-1.00000	-1.00000	-1.00000	-1.00000	-1.00000	-1.00000	-1.00000	-1.00000	-1.00000	-1.00000	-1.00000
147.00000	-1.00000	-1.00000	-1.00000	-1.00000	-1.00000	-1.00000	-1.00000	-1.00000	-1.00000	-1.00000	-1.00000
161.00000	-0.62000	-0.62000	-0.62000	-0.62000	-0.62000	-0.62000	-0.62000	-0.62000	-0.62000	-0.62000	-0.62000
172.50000	-0.78000	-0.78000	-0.78000	-0.78000	-0.78000	-0.78000	-0.78000	-0.78000	-0.78000	-0.78000	-0.78000
180.00000	0.0	0.0	0.0	0.0	0.0	0.0	0.0	0.0	0.0	0.0	0.0

Figure 3-6. Set of Data Tables for the NACA 0012 Airfoil Section.

NACA 0012 AIRFOIL CLCD DATA TABLES USED

CD

ALPHA/MACH	0.0	0.20000	0.30000	0.40000	0.50000	0.60000	0.70000	0.75000	0.80000	0.90000	1.00000
-180.00000	0.02200	0.02200	0.02200	0.02200	0.02200	0.02200	0.02200	0.02200	0.02200	0.02200	0.02200
-175.00000	0.06200	0.06200	0.06200	0.06200	0.06200	0.06200	0.06200	0.06200	0.06200	0.06200	0.06200
-170.00000	0.13200	0.13200	0.13200	0.13200	0.13200	0.13200	0.13200	0.13200	0.13200	0.13200	0.13200
-165.00000	0.24200	0.24200	0.24200	0.24200	0.24200	0.24200	0.24200	0.24200	0.24200	0.24200	0.24200
-160.00000	0.30200	0.30200	0.30200	0.30200	0.30200	0.30200	0.30200	0.30200	0.30200	0.30200	0.30200
-155.00000	1.04200	1.04200	1.04200	1.04200	1.04200	1.04200	1.04200	1.04200	1.04200	1.04200	1.04200
-120.00000	1.65200	1.65200	1.65200	1.65200	1.65200	1.65200	1.65200	1.65200	1.65200	1.65200	1.65200
-110.00000	1.85200	1.85200	1.85200	1.85200	1.85200	1.85200	1.85200	1.85200	1.85200	1.85200	1.85200
-100.00000	2.02200	2.02200	2.02200	2.02200	2.02200	2.02200	2.02200	2.02200	2.02200	2.02200	2.02200
-90.00000	2.02200	2.02200	2.02200	2.02200	2.02200	2.02200	2.02200	2.02200	2.02200	2.02200	2.02200
-80.00000	1.96200	1.96200	1.96200	1.96200	1.96200	1.96200	1.96200	1.96200	1.96200	1.96200	1.96200
-70.00000	1.84200	1.84200	1.84200	1.84200	1.84200	1.84200	1.84200	1.84200	1.84200	1.84200	1.84200
-60.00000	1.66200	1.66200	1.66200	1.66200	1.66200	1.66200	1.66200	1.66200	1.66200	1.66200	1.66200
-50.00000	1.39200	1.39200	1.39200	1.39200	1.39200	1.39200	1.39200	1.39200	1.39200	1.39200	1.39200
-30.00000	0.56200	0.56200	0.56200	0.56200	0.56200	0.56200	0.56200	0.56200	0.56200	0.56200	0.56200
-21.00000	0.33200	0.33200	0.33200	0.33200	0.33200	0.33200	0.33200	0.33200	0.33200	0.33200	0.33200
-16.00000	0.15500	0.15500	0.18100	0.20700	0.23500	0.25700	0.27400	0.29200	0.30500	0.34200	0.34200
-15.00000	0.10200	0.10200	0.14800	0.18100	0.20900	0.23300	0.25200	0.27100	0.28200	0.29800	0.29800
-14.00000	0.03800	0.03400	0.09900	0.14600	0.18000	0.21200	0.23300	0.24900	0.26000	0.29300	0.29300
-13.00000	0.02640	0.02640	0.04550	0.09400	0.14800	0.19100	0.21600	0.23100	0.23900	0.27200	0.29200
-12.00000	0.02200	0.02200	0.03000	0.06000	0.11100	0.16400	0.19800	0.21100	0.22000	0.25200	0.29100
-11.00000	0.01960	0.01960	0.02320	0.03800	0.07800	0.13500	0.17100	0.19200	0.20200	0.23200	0.27500
-10.00000	0.01740	0.01740	0.01890	0.02590	0.05300	0.10500	0.14500	0.17600	0.18600	0.21300	0.25400
-9.00000	0.01540	0.01540	0.01590	0.01870	0.03510	0.07700	0.12200	0.15900	0.17200	0.19900	0.23200
-8.00000	0.01380	0.01380	0.01380	0.01470	0.02200	0.05300	0.10130	0.14000	0.15500	0.18300	0.21400
-7.00000	0.01220	0.01220	0.01220	0.01230	0.01410	0.03500	0.08200	0.11100	0.13900	0.16900	0.19200
-6.00000	0.01100	0.01100	0.01100	0.01100	0.01100	0.02120	0.06150	0.08200	0.12000	0.14000	0.17000
-5.00000	0.01000	0.01000	0.01000	0.01000	0.01000	0.01320	0.03800	0.05400	0.04800	0.11100	0.14000
-4.00000	0.00930	0.00930	0.00930	0.00930	0.00930	0.01000	0.01670	0.03000	0.05750	0.09500	0.11200
-3.00000	0.00880	0.00880	0.00880	0.00880	0.00880	0.00900	0.01320	0.01750	0.03550	0.08600	0.10200
-2.00000	0.00850	0.00850	0.00850	0.00850	0.00850	0.00850	0.00880	0.01170	0.02400	0.08100	0.09800
-1.00000	0.00830	0.00830	0.00830	0.00830	0.00830	0.00830	0.00830	0.00910	0.01750	0.07800	0.09600
0.0	0.00800	0.00800	0.00800	0.00800	0.00800	0.00800	0.00800	0.00800	0.01370	0.07800	0.09500
1.00000	0.00830	0.00830	0.00830	0.00830	0.00830	0.00830	0.00830	0.00910	0.01750	0.07800	0.09600
2.00000	0.00850	0.00850	0.00850	0.00850	0.00850	0.00850	0.00860	0.01170	0.02400	0.08100	0.09800
3.00000	0.00880	0.00880	0.00880	0.00880	0.00880	0.00900	0.01320	0.01750	0.03550	0.08600	0.10200
4.00000	0.00930	0.00930	0.00930	0.00930	0.00930	0.01000	0.01670	0.03000	0.05750	0.09500	0.11200
5.00000	0.01000	0.01000	0.01000	0.01000	0.01000	0.01320	0.03800	0.05400	0.04800	0.11100	0.14000
6.00000	0.01100	0.01100	0.01100	0.01100	0.01100	0.02120	0.06150	0.08200	0.12000	0.14000	0.17000
7.00000	0.01220	0.01220	0.01220	0.01230	0.01410	0.03500	0.08200	0.11100	0.13900	0.16900	0.19200
8.00000	0.01380	0.01380	0.01380	0.01470	0.02200	0.05300	0.10100	0.14000	0.15500	0.18300	0.21400
9.00000	0.01540	0.01540	0.01590	0.01870	0.03510	0.07700	0.12200	0.15900	0.17200	0.19900	0.23200
10.00000	0.01740	0.01740	0.01890	0.02590	0.05300	0.10500	0.14500	0.17600	0.18600	0.21300	0.25400
11.00000	0.01960	0.01960	0.02320	0.03800	0.07800	0.13500	0.17000	0.19200	0.20200	0.23200	0.27500
12.00000	0.02200	0.02200	0.03000	0.06000	0.11100	0.16400	0.19800	0.21100	0.22000	0.25200	0.29100
13.00000	0.02640	0.02640	0.04550	0.09400	0.14800	0.19100	0.21600	0.23100	0.23900	0.27200	0.29200
14.00000	0.03800	0.03800	0.09900	0.14600	0.18000	0.21200	0.23300	0.24900	0.26000	0.29300	0.29300
15.00000	0.10200	0.10200	0.14800	0.18100	0.20900	0.23300	0.25200	0.27100	0.28200	0.29800	0.29800
16.00000	0.15500	0.15500	0.18100	0.20700	0.23500	0.25700	0.27400	0.29200	0.30500	0.34200	0.34200
21.00000	0.33200	0.33200	0.33200	0.33200	0.33200	0.33200	0.33200	0.33200	0.33200	0.33200	0.33200
30.00000	0.56200	0.56200	0.56200	0.56200	0.56200	0.56200	0.56200	0.56200	0.56200	0.56200	0.56200
50.00000	1.39200	1.39200	1.39200	1.39200	1.39200	1.39200	1.39200	1.39200	1.39200	1.39200	1.39200
60.00000	1.66200	1.66200	1.66200	1.66200	1.66200	1.66200	1.66200	1.66200	1.66200	1.66200	1.66200
70.00000	1.84200	1.84200	1.84200	1.84200	1.84200	1.84200	1.84200	1.84200	1.84200	1.84200	1.84200
80.00000	1.96200	1.96200	1.96200	1.96200	1.96200	1.96200	1.96200	1.96200	1.96200	1.96200	1.96200
90.00000	2.02200	2.02200	2.02200	2.02200	2.02200	2.02200	2.02200	2.02200	2.02200	2.02200	2.02200
100.00000	2.02200	2.02200	2.02200	2.02200	2.02200	2.02200	2.02200	2.02200	2.02200	2.02200	2.02200
110.00000	1.85200	1.85200	1.85200	1.85200	1.85200	1.85200	1.85200	1.85200	1.85200	1.85200	1.85200
120.00000	1.65200	1.65200	1.65200	1.65200	1.65200	1.65200	1.65200	1.65200	1.65200	1.65200	1.65200
140.00000	1.34200	1.04200	1.34200	1.04200	1.34200	1.04200	1.04200	1.04200	1.04200	1.04200	1.04200
160.00000	0.30200	0.30200	0.30200	0.30200	0.30200	0.30200	0.30200	0.30200	0.30200	0.30200	0.30200
165.00000	0.24200	0.24200	0.24200	0.24200	0.24200	0.24200	0.24200	0.24200	0.24200	0.24200	0.24200
170.00000	0.13200	0.13200	0.13200	0.13200	0.13200	0.13200	0.13200	0.13200	0.13200	0.13200	0.13200
175.00000	0.06200	0.06200	0.06200	0.06200	0.06200	0.06200	0.06200	0.06200	0.06200	0.06200	0.06200
180.00000	0.02200	0.02200	0.02200	0.02200	0.02200	0.02200	0.02200	0.02200	0.02200	0.02200	0.02200

Figure 3-6. Continued.

NACA 0012 AIRFOIL CLCD DATA TABLES USED

CM

ALPHA/MACH	0.20000	0.30000	0.40000	0.50000	0.60000	0.70000	0.75000	0.80000	0.90000
-180.00000	0.0	0.0	0.0	0.0	0.0	0.0	0.0	0.0	0.0
-170.00000	0.40000	0.40000	0.40000	0.40000	0.40000	0.40000	0.40000	0.40000	0.40000
-165.00000	0.30000	0.30000	0.30000	0.30000	0.30000	0.30000	0.30000	0.30000	0.30000
-160.00000	0.30000	0.30000	0.30000	0.30000	0.30000	0.30000	0.30000	0.30000	0.30000
-135.00000	0.50000	0.50000	0.50000	0.50000	0.50000	0.50000	0.50000	0.50000	0.50000
-90.00000	0.50000	0.50000	0.50000	0.50000	0.50000	0.50000	0.50000	0.50000	0.50000
-30.00000	0.17400	0.18400	0.19400	0.21400	0.23500	0.25300	0.26400	0.27700	0.29800
-23.00000	0.11200	0.11800	0.12800	0.14400	0.15700	0.17100	0.18300	0.20600	0.23200
-16.00000	0.07300	0.07800	0.08600	0.09700	0.10800	0.11700	0.13700	0.17600	0.20000
-15.00000	0.05400	0.06500	0.07300	0.08400	0.09700	0.11100	0.13300	0.17300	0.19500
-14.00000	0.0	0.02700	0.05400	0.06800	0.08600	0.10300	0.12700	0.16700	0.18900
-13.00000	0.0	0.00150	0.02500	0.05000	0.07400	0.09300	0.12200	0.16300	0.18400
-12.00000	0.0	0.0	0.00200	0.03000	0.06000	0.08300	0.11600	0.15700	0.17600
-11.00000	0.0	0.0	-0.00300	0.01600	0.04600	0.07400	0.10000	0.14900	0.17000
-10.00000	0.0	0.0	-0.00150	0.00200	0.03200	0.06500	0.10000	0.14200	0.16300
-9.00000	0.0	0.0	0.0	-0.00300	0.01600	0.05400	0.08900	0.13200	0.15400
-8.00000	0.0	0.0	0.0	-0.00400	0.00500	0.04100	0.08200	0.12300	0.14500
-7.00000	0.0	0.0	0.0	0.0	-0.00400	0.02750	0.07200	0.11250	0.13600
-6.00000	0.0	0.0	0.0	0.0	-0.00300	0.01600	0.06250	0.10000	0.12500
-4.00000	0.0	0.0	0.0	0.0	0.0	0.00500	0.04000	0.07600	0.10200
-3.00000	0.0	0.0	0.0	0.0	0.0	-0.00250	0.02600	0.06650	0.08700
-2.00000	0.0	0.0	0.0	0.0	0.0	0.0	0.01300	0.05300	0.07000
-1.00000	0.0	0.0	0.0	0.0	0.0	0.0	0.00350	0.03300	0.04500
0.0	0.0	0.0	0.0	0.0	0.0	0.0	0.0	0.0	0.0
1.00000	0.0	0.0	0.0	0.0	0.0	0.0	-0.00350	-0.03300	-0.04500
2.00000	0.0	0.0	0.0	0.0	0.0	0.0	-0.01300	-0.05300	-0.07000
3.00000	0.0	0.0	0.0	0.0	0.0	0.00250	-0.02600	-0.06650	-0.08700
4.00000	0.0	0.0	0.0	0.0	0.0	-0.00500	-0.04000	-0.07600	-0.10200
6.00000	0.0	0.0	0.0	0.0	0.00300	-0.01600	-0.06250	-0.10000	-0.12500
7.00000	0.0	0.0	0.0	0.0	0.00400	-0.02750	-0.07200	-0.11250	-0.13600
8.00000	0.0	0.0	0.0	0.00400	-0.00500	-0.04100	-0.08200	-0.12300	-0.14500
9.00000	0.0	0.0	0.0	0.00300	-0.01600	-0.05400	-0.08900	-0.13200	-0.15400
10.00000	0.0	0.0	0.00150	-0.00200	-0.03200	-0.06500	-0.10000	-0.14200	-0.16300
11.00000	0.0	0.0	0.00300	-0.01400	-0.04600	-0.07400	-0.10800	-0.14900	-0.17000
12.00000	0.0	0.0	-0.00200	-0.03000	-0.06000	-0.08300	-0.11600	-0.15700	-0.17600
13.00000	0.0	0.00150	-0.02500	-0.05000	-0.07400	-0.09300	-0.12200	-0.16300	-0.18400
14.00000	0.0	-0.02700	-0.05400	-0.06800	-0.08600	-0.10300	-0.12700	-0.16700	-0.18900
15.00000	-0.05400	-0.06500	-0.07300	-0.08400	-0.09700	-0.11100	-0.13300	-0.17300	-0.19500
16.00000	-0.07300	-0.07800	-0.08600	-0.09700	-0.10800	-0.11700	-0.13700	-0.17600	-0.20000
23.00000	-0.11200	-0.11800	-0.12800	-0.14400	-0.15700	-0.17100	-0.18300	-0.20600	-0.23200
30.00000	-0.17400	-0.18400	-0.19400	-0.21400	-0.23500	-0.25300	-0.26400	-0.27700	-0.29800
90.00000	-0.50000	-0.50000	-0.50000	-0.50000	-0.50000	-0.50000	-0.50000	-0.50000	-0.50000
135.00000	-0.50000	-0.50000	-0.50000	-0.50000	-0.50000	-0.50000	-0.50000	-0.50000	-0.50000
160.00000	-0.30000	-0.30000	-0.30000	-0.30000	-0.30000	-0.30000	-0.30000	-0.30000	-0.30000
165.00000	-0.30000	-0.30000	-0.30000	-0.30000	-0.30000	-0.30000	-0.30000	-0.30000	-0.30000
170.00000	-0.40000	-0.40000	-0.40000	-0.40000	-0.40000	-0.40000	-0.40000	-0.40000	-0.40000
180.00000	0.0	0.0	0.0	0.0	0.0	0.0	0.0	0.0	0.0

Figure 3-6. Concluded.

3.6 MAIN ROTOR GROUP

This entire group must be omitted if IPL(7) = 1 or 3. This rotor always rotates counterclockwise when viewed from above, i.e., the standard direction of rotation for main rotors of American-made helicopters.

CARD 41

The number of blades, XMR(1), must be in the range from 2 to 7 inclusive. The geometric and physical properties of each blade are assumed to be identical to those of all other blades.

The rotor undersling, XMR(2), may be a nonzero quantity only for a teetering or gimbaled rotor. It is the vertical distance between the flapping axis/axes and the pitch-change axis at the center of the hub (r=0). It is positive if the pitch-change axis is below the flapping axis/axes. See Section 3.26.4 for additional details.

If the chord is constant over the blade radius, this single value may be entered as XMR(5), and the chord distribution on CARDS 4A, 4B, and 4C must be omitted. If XMR(5) = 0, the chord distribution must be input.

If the blade twist is linear and less than 100 degrees from root to tip, the total twist may be input as XMR(6), and the program will compute the distribution. In this case, CARDS 4D, 4E, and 4F must be omitted. If XMR(6) $\geq$ 100, these twist distribution cards must be included. Positive twist is in the direction of positive blade pitch. The normal rotor blade with washout will have negative twist.

The flapping stop location is the maximum amount the hub can flap without hitting the flapping stop spring. The normal input is positive. See also XMR(17), CARD 43.

CARD 42

The location of the shaft pivot point as specified by XMR(8), (9), and (10) is primarily intended for use with tilt-rotor configurations. These inputs in conjunction with the mast tilt angles and length (XMR(44), (45), and (46), respectively, on CARD 47) are used to determine the stationline, buttline, and waterline of the rotor hub, the point at which the summation of the rotor forces acts. For other than tilt rotor aircraft, the shaft pivot point is normally located at the rotor hub, and the mast length, XMR(46), is set to 0.0.

Blade weight, XMR(11), is the weight of a single blade in pounds. Each of the XMR(1) blades is assumed to weigh the same.

Blade inertia is the inertia of a single blade about the line which passes through the centerline of the rotor shaft and is perpendicular to the blade feathering axis and the shaft. For a teetering or gimbaled rotor with no pitch-flap coupling (XMR(24) = 0.0), this line is equivalent

to the flapping axis. These two inputs are used only for the case of rigid blade (IPL(3) = 0). If the main rotor aeroelastic blade data set is input (IPL(3) ≠ 0), the blade weight and inertia are internally computed from the blade weight distribution, XMW(1) through XMW(21), in the aeroelastic blade data set; in this case, the input values of XMR(11) and (12) are ignored.

CARD 43

XMR(15) is used to select the blade station at which the beamwise, chordwise, and torsional moments are calculated at each time point in a maneuver for an elastic rotor. There are 21 blade stations located at 5% intervals and numbered sequentially from 0 at the hub (zero radius) to 20 at the blade tip.

XMR(16), the hub-type indicator, = 0.0 for gimbaled or teetering rotor; ≠ 0.0 for rigid or articulated rotor. The distinguishing characteristic of a gimbaled or teetering rotor is that the response of any blade depends on the loading on all of the blades because of the moments transmitted across the rotor hub. On a rigid or articulated rotor, each blade acts independently, with the difference between these two being in the mode shape characteristics.

The flapping stop spring rate, XMR(17), is used in the dynamic model of the flapping stops. When flapping exceeds XMR(7), a restoring moment proportional to the displacement relative to the stop is applied.

The flapping spring rate, XMR(18), generates a restoring moment whenever there is any flapping.

In the explanation of XMR(17) and XMR(18), flapping is defined as the slope of the blade at the hub including displacements from all modes, but not including precone.

The reduced rotor frequency, XMR(19), is used only when the UNSAN unsteady aerodynamic option is activated for the rotor. Otherwise, the input is ignored. If the input is less than or equal to zero, it is reset to unity (one per rev). See the discussion of UNSAN in Volume I to aid in determining this input.

The lead-lag damper, XMR(20), is included primarily for simulation of articulated rotors. It applies a concentrated force, at 10 percent radius, proportional to the inplane velocity at that point. A zero input indicates no damper.

If a blade segment is completely inboard of the hub extent, XMR(21), the segment produces no lift or pitching moment and has a drag coefficient of XMR(25) based on the planform area of the segment. If a blade segment is partially or completely outboard of the hub extent, the airfoil aerodynamics specified by IPL(18) or CARD 4G are used for the segment.

CARD 44

The location of the pitch change axis, XMR(23), is the distance from the quarter (25%) chord of the blade to the blade feathering axis in units of chord lengths. Positive XMR(23) is toward the trailing edge of the blade. For example, if the pitch change axis is 30% chord aft of the leading edge, XMR(23) should equal 0.05 (5% aft of the 25% chord line). Similarly, if the axis is at 17% chord, XMR(23) should equal -0.08 (8% forward of 25% chord line). A value of 0.0 (equivalent to 25% chord) is the normal input. An accurate value for this input is particularly important when either of the unsteady aerodynamic options is activated, i.e., IPL(20) $\neq$ 0. Also, see Section 3.26.4.

Positive pitch flap coupling angle, XMR(24), acts to reduce blade pitch with positive flapping. The tangent of the angle should be considered as having units of degrees of blade pitch change per degree of blade flapping. Also, see Section 3.26.4.

Drag coefficient for hub, XMR(25), is discussed with hub extent in CARD 43.

The coefficient for tip vortex effect, XMR(27), modifies the induced velocity distribution on the outboard 30 percent of the rotor blade to simulate the effect of shed tip vortices. The simulation gives improved airload calculations in the low speed range. However, power and other performance values are not affected significantly. Rotor bending moments computed by another version of this program showed improved correlation with test data when a value of 10 was used for this coefficient. If the input is zero, the effect is removed.

CARD 45

Tip sweep angle and shift in the aerodynamic center at the tip, XMR(29) and XMR(30), are described in Section 3.5.2 as X(29) and X(30), respectively. See Section 3.26.4 for definition of XMR(31) and XMR(32).

CARD 46

The intended use of the rotor nacelle inputs on this card is to simulate changes in aerodynamic forces and the cg location of a tilt-rotor aircraft during conversion. Each rotor has its own nacelle, although for a tilt-rotor aircraft all nacelle inputs are normally identical except that the buttlines of the aerodynamic centers, XMR(38) and XTR(38), are opposite in sign. For configurations other than tilt-rotor aircraft, the nacelle weight should be set to zero. However, even with zero nacelle weight, the nacelle drag inputs can still be used to simulate such effects as drag of a fairing around the mast, additional hub drag, etc.

Rotor nacelle weight is the total weight of the nacelle, dynamic pylon, rotor hub, blades, etc., which contribute to a shift of the aircraft cg with F/A mast tilt angle. If the F/A mast tilt angle is to remain

constant at the input value of XMR(44) during the run, and the aircraft cg input on CARD 21 is the aircraft cg for the input mast tilt angles of both rotors, then nacelle weight should be input as zero. Otherwise, a shift from the cg input on CARD 21 will be calculated as explained below.

Nacelle cg inputs are intended to locate the cg of the moveable weight (pylon, rotor, etc.) for zero degrees F/A mast tilt and XMR(45) degrees lateral mast tilt. Since only the F/A tilt angle is variable during a maneuver and F/A tilt is in the body X-Z plane, only shifts in cg stationline and waterline are calculated. The shifts of cg station, ΔSTA, and waterline, ΔWL, due to F/A mast tilt angle, β_m, are given by the following equations:

$$\Delta STA = Z\sin\beta_m + X(1 - \cos\beta_m)$$

$$\Delta WL = Z(1 - \cos\beta_m) - X\sin\beta_m$$

where

$$X = [XMR(36)/XFS(1)]*[XMR(8) - XMR(37)]$$

$$Z = [XMR(36)/XFS(1)]*[XMR(10) \cdot XMR(39)]$$

The rotor nacelle differential flat plate drag area, XMR(40), is defined as the increase in the total flat plate drag of the aircraft (without rotors and at zero angles of attack and sideslip) as the F/A mast tilt angle is changed from 90 degrees (horizontal) to 0 degrees (vertical). Note that the main rotor and tail rotor nacelle are modeled separately; hence, this differential flat plate drag area is for one nacelle only. From XMR(40), the nacelle drag area, D_N, is computed by the following equation:

$$D_N = XMR(40)*\cos^3(\alpha_N)$$

where α_N is the angle between the free-stream velocity vector and its projection on the plane perpendicular to the rotor mast. This drag is then applied at the nacelle aerodynamic center which is assumed to be on the centerline of the mast at a distance XMR(41) feet from the mast pivot point. The direction for positive XMR(41) is defined as up the mast when the mast is vertical.

CARD 47

Let γ be the control phasing angle, XMR(43). Then the equation for rotor feathering is as given below:

$$\theta(\psi) = \theta_o + \theta_{TWIST} - \beta(\psi)*\tan\delta_3$$

$$- \tan^{-1}\Big([\tan(B_1) + \tan(A_1)*\tan(\delta_3 - \gamma)]*\sin\psi$$

$$+ [\tan(A_1) - \tan(B_1)*\tan(\delta_3 - \gamma)]*\cos\psi \Big)$$

where

ψ = rotor azimuth location

θ = blade geometric pitch

θ_o = root collective pitch

θ_{TWIST} = change in blade pitch from root to blade segment due to built-in and elastic twist

B_1 = control input from F/A cyclic stick

A_1 = control input from lateral cyclic stick

δ_3 = pitch-flap coupling, XMR(24)

β = blade flapping

The F/A and lateral mast tilt angles, XMR(44) and XMR(45) respectively, are both zero for a mast which is vertical, i.e., parallel to the body Z-axis. For nonzero mast angles, the angles are treated as Euler angles where the F/A mast tilt angle is the first rotation (positive forward) and the lateral tilt mast angle is the second rotation (positive right). The mast length XMR(46) is the distance from the mast pivot point (XMR(8), (9), and (10) on CARD 42) to the rotor hub. The direction for positive XMR(46) is defined as up the mast when the mast is vertical. The mast length may be zero if the location of the hub is given by XMR(8), (9), and (10).

The incremental torsional inertia of the mast is that inertia which is not included in the blade weight distribution. This variable is also used as a control switch on mast windup where a zero indicates a mast which is rigid in torsion. The torsional spring constant of the mast may be input as zero if XMR(47) = 0.0.

CARD 48 (include this card only if IPL(8) = 1 or 3)

Fore-and-aft dynamic pylon motion is governed by the following differential equation:

$$I_F \ddot{a}_F + c_F \dot{a}_F + k_F a_F = l_F S_x - PMOM$$

where

I_F is the total pylon inertia about the F/A pylon focal point which equals the inertia of the blade being translated along its radial axis plus XMP(1), which is the inertia of the pylon with the rotor off. NOTE: XMP(1) as well as IPL(8) acts as a switch for F/A pylon motion. If XMP(1) = 0.0, there is no F/A pylon motion. If XMP(1) $\neq$ 0.0, the pylon equation will be used even if a zero spring rate is input.

c_F is the pylon damping, XMP(2).

k_F is the pylon spring rate, XMP(3).

l_F is the effective length of pylon, XMP(4); positive for focal point below rotor hub.

a_F, $\dot{a}_F$, and $\ddot{a}_F$ are the pylon angular deflection, velocity, and acceleration, respectively; positive forward.

S_x is the net rotor shear force in the shaft reference x direction.

PMOM is the net pitching moment transmitted from the rotor to the top of the mast.

The coupling ratios define the degree change of the specified swashplate angle or blade angle per degree change of F/A pylon angle.

Sign Conventions: Positive pylon motion for both main and tail rotors is in the same direction as positive mast tilt. The hub moves forward and down. Positive coupling ratios will give the following inputs with positive fore-and-aft pylon motion:

(1) Forward cyclic (both rotors)
(2) Right cyclic (main rotor); left cyclic (tail rotor)
(3) Up collective (both rotors)

CARD 49 (include this card only if IPL(8) = 1 or 3)

Lateral pylon motion is governed by the following differential equation:

$$I_L \ddot{a}_L + c_L \dot{a}_L + k_L a_L = l_L S_y + RMOM$$

where

I_L is the total pylon inertia about the lateral pylon focal point. XMP(8) is the inertia of the pylon with the rotor off. (If XMP(8) = 0.0, there is no lateral pylon motion.)

c_L is the pylon damping, XMP(9).

k_L is the pylon spring rate, XMP(10).

l_L is the effective length of pylon, XMP(11); positive for focal point below rotor hub.

a_L, $\dot{a}_L$, and $\ddot{a}_L$ are the pylon angular deflection, velocity, and acceleration, respectively.

S_y is the net rotor shear force in the shaft reference y direction.

RMOM is the net rolling moment transmitted from the rotor to the top of the mast.

The coupling ratios define the degree change of the specified swashplate angle per degree change of lateral pylon angle.

Sign Conventions: Positive lateral pylon motion moves the hub to the pilot's right and down for the main rotor but left and down for the tail rotor. Positive coupling ratios will give the following inputs:

(1) Forward cyclic (both rotors)
(2) Right cyclic (main rotor); left cyclic (tail rotor)
(3) Up collective (both rotors)

CARDS 4A, 4B, 4C

These three cards may be used to input a nonuniform chord distribution for the blade. The cards must be omitted if XMR(5) $\neq$ 0 and must be included if XMR(5) = 0. The subscript of each entry in the XMC array corresponds to the Blade Station Number of the entry; e.g., XMC(6) is the chord at Blade Station No. 6. The chord at Blade Station No. 0 is not input; it is assumed equal to the chord at Blade Station No. 1. The distribution must be root to tip.

CARDS 4D, 4E, 4F

These three cards may be used to input a nonlinear twist distribution for the blade. The cards must be omitted if XMR(6) $\leq$ 100. The subscript of each entry in the XMT array corresponds to the Blade Station Number of the entry; e.g., XMT(11) is the twist at Blade Station No. 11. The twist angle at Blade Station No. 0 is not input; it is defined to be zero and the twist distribution is then the set of angles of the chord line at the appropriate Blade Station with respect to the root collective pitch angle. Positive twist, like positive collective pitch, is defined as leading edge up. The distribution must be root to tip.

CARD 4G

This card may be used to input a nonuniform airfoil section distribution for the blade. The card must be omitted if IPL(18) $\geq$ 0 and must be included if IPL(18) < 0. The format for the IDTABM array is 20I1 starting in column 1. These integer inputs correspond to the sequence number of the Rotor Airfoil Aerodynamic (RAA) Subgroup which is to be used at the specified Blade Station. The subscript of each entry in the IDTABM array specifies the Blade Station Number of the entry. For example, if IDTABM (13) = 4, RAA Subgroup No. 4 is used at Blade Station No. 13. Each value of IDTABM must be less than or equal to IPL(6), the total number of RAA subgroups input. The airfoil section at Blade Station No. 0, the blade theoretical root, is not input; it is assumed to be part of the hub and capable of producing only drag based on the hub drag coefficient, XMR(25).

3.7 TAIL ROTOR GROUP

The Main Rotor and Tail Rotor models are identical except that the Tail Rotor always rotates clockwise with respect to its mast as viewed from the top. Note that for zero mast tilt angles the tail rotor mast as well as the main rotor mast is vertical. The inputs required and input sequence are identical for the two groups with the following exceptions:

(1) XTR(28), the sidewash coefficient, does not have a counterpart XMR(28) in the Main Rotor Group.
(2) The effect of program logic inputs: IPL(1), (4), and (19) affect the tail rotor but not the main rotor; different values of IPL(7) and (8) are used for the tail rotor. IPL(3) and IPL(18) do not affect the tail rotor.

Hence, see the Main Rotor Group for all except:

CARD 50

If IPL(1) $\neq$ 0 or if IPL(7) = 2 or 3, omit the entire tail rotor group.

CARD 52

The blade weight and inertia inputs, XTR(11) and (12), are ignored if IPL(4) $\neq$ 0; i.e., when a tail rotor aeroelastic blade data set is input.

CARD 54

Tail rotor sidewash coefficient, K, is used to simulate the effect of the fuselage on the wind vector at the tail rotor as follows:

$$V_T = V_F \ (1. - K)$$

where V_F and V_T are the lateral components of the wind vector, in body reference, felt by the fuselage and the tail rotor, respectively.

CARD 57

For the tail rotor to act as an antitorque rotor, the mast must be tilted from the vertical to its proper orientation, e.g., XTR(44) = 0.0 and XTR(45) = $\pm$90. If XTR(45) = +90 (tilted to the right), the advancing blade is at the top of the rotor disc (clockwise rotation when viewed from the right side of the aircraft). If XTR(45) = -90 (tilted to the left), the advancing blade is at the bottom of the rotor disc (counterclockwise rotation when viewed from the right side of the aircraft).

CARDS 58 and 59

These cards, the pylon inputs, are to be included only if IPL(8) = 2 or 3.

CARD 5G

IPL(19) rather than IPL(18) specifies tail rotor steady-state aerodynamics and causes read-in of CARD 5G if less than zero.

3.8 WING GROUP (omit entire group if IPL(9) = 0)

3.8.1 Basic Model

CARD 61

Wing area should include carry-through area if any. The program divides the area equally between the left and right wing panels.

The center of pressure and dihedral angle inputs (XWG(2), (3), (4), and (6)) are for the right wing panel. The left panel is assumed to be symmetrical to the right panel about the zero buttline plane. XWG(5) is the incidence angle of each panel when all primary flight controls are at 50 percent and the control surface deflection is zero. It is positive for leading edge up. Positive dihedral angle, XWG(6), means the outboard tip of each panel is up. See Figure 3-7.

The sweepback angle, XWG(7), is positive aft.

CARD 62

The geometric aspect ratio, XWG(8), is to be defined by the planform area in the plane of the sweepback angle and the span in the body Y-Z plane.

The spanwise efficiency factor, XWG(9), relates the geometric aspect ratio to the effective aspect ratio. See Section 3.8.2 for further details.

The taper ratio of the surface, XWG(10), is equal to the surface tip chord divided by the root chord; e.g., 1.0 is a parallelogram, 0.0 is a triangle.

XWG(11) and XWG(13) are used in calculating dynamic pressure loss at the stabilizing surfaces due to the wing, as discussed at the end of this section. The Wing Group does not have a counterpart to XSTB1(11), the tail bending coefficient. Although similar in use, XWG(13) and XSTB1(13) are not necessarily equal.

Control surface deflection, XWG(14), is positive for trailing edge down.

CARD 63

The model for changing surface lift coefficient, maximum lift coefficient, drag coefficient and pitching moment coefficient with control surface, or flap, deflection is based on analysis and data from Reference 8 and Chapter 6 of Reference 9. The change in lift coefficient due to flap deflection, δ_f, is

$$(\Delta C_L)_f = XWG(15)*\delta_f + XWG(16)*\delta_f*\left|\delta_f\right|$$

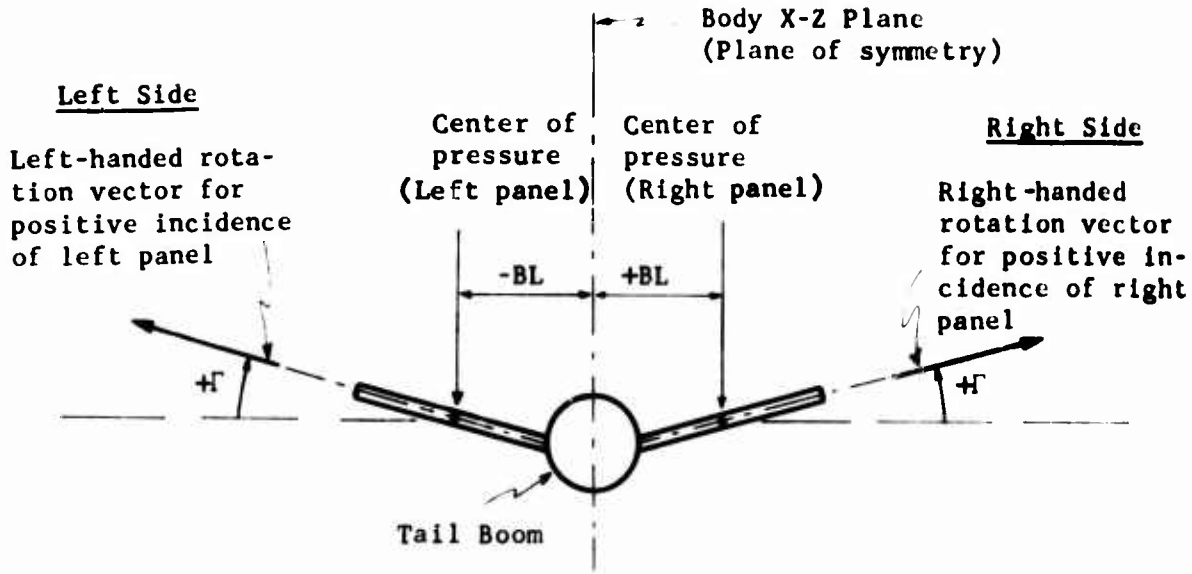

(a) Rear View of Wing or Symmetrical Horizontal Stabilizer With Positive Dihedral.

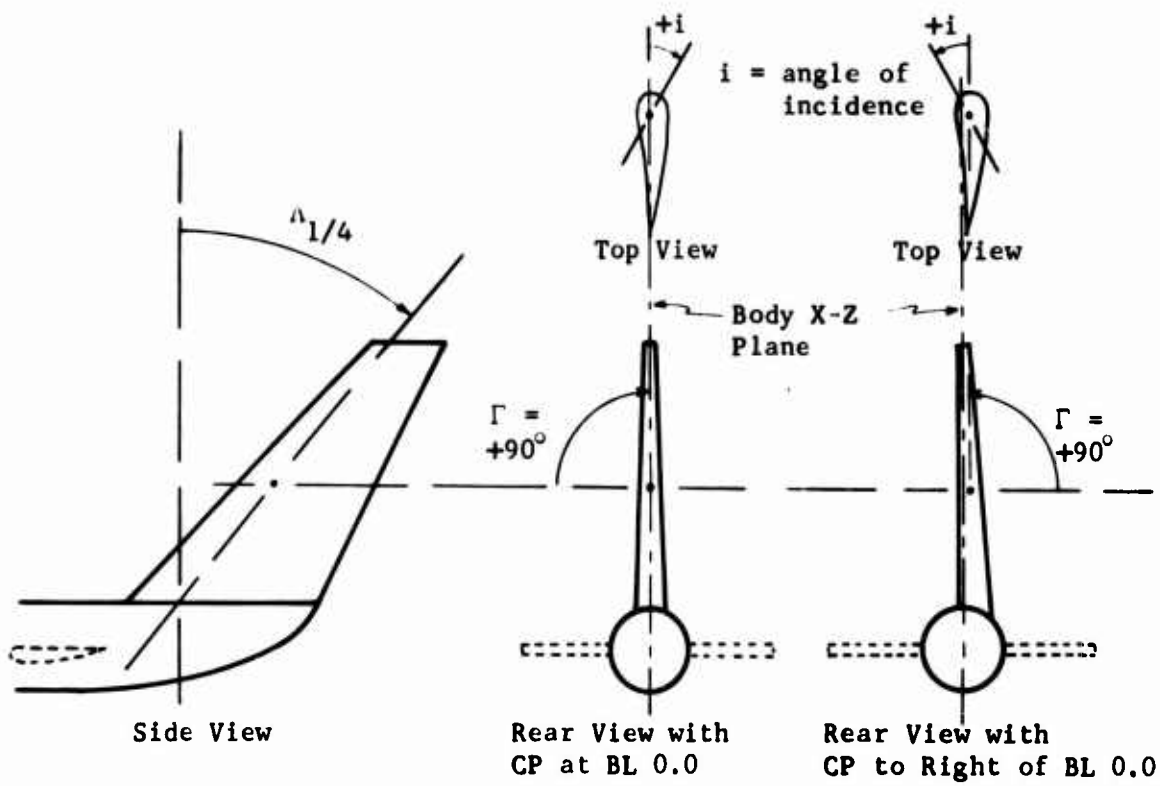

(b) Three View of Swept Vertical Stabilizer With Center of Pressure on and to the Right of the Fuselage Plane of Symmetry.

Figure 3-7. Aerodynamic Surface Dihedral and Incidence Angles.

and the change in maximum lift coefficient is

$$(\Delta C_L)_{max} = XWG(17)*\delta_f + XWG(18)*\delta_f^{\ 2} + (\Delta C_L)_f$$

The input XWG(17) and XWG(18) account for the situation where the maximum lift coefficient is increased more or less than the change in lift coefficient.

The change in profile drag coefficient due to flap deflection is

$$(\Delta C_D)_f = XWG(19)*\delta_f + XWG(20)*\delta_f^{\ 2}$$

CARD 64

The change in pitching moment coefficient due to flap deflection is

$$(\Delta C_M)_f = XWG(22)*\delta_f + XWG(23)*\delta_f*|\delta_f|$$

CARD 65

XWG(29) through (32) control the effect of the wake from each rotor on the flow field at each wing panel. These effects are represented by superimposing two velocity vectors (one from each rotor) on the flow field at each panel. Each velocity vector is a function of the induced velocity at specific rotor disc. The function may be either a constant or a value obtained from a Rotor Wake at Aerodynamic Surface (RWAS) Table. It is necessary that the four functions all be constants or all be from RWAS tables; combinations of constants and tables are not permitted.

The magnitude of these wake effect inputs controls which function will be used. If the inputs are less than or equal to 100, a four velocity vector will be computed using the input value as a constant factor:

$$(\Delta\vec{V})_{1R} = XWG(29)*(\bar{V}_i)_1$$

$$(\Delta\vec{V})_{1L} = XWG(30)*(\bar{V}_i)_1$$

$$(\Delta\vec{V})_{2L} = XWG(31)*(\bar{V}_i)_2$$

$$(\Delta\vec{V})_{2R} = XWG(32)*(\bar{V}_i)_2$$

where $\Delta\vec{V}$ is the velocity to be superimposed,

$\bar{V}_i$ is the average induced velocity at the rotor disc.

The numerical subscripts refer to the rotor (1 = main, 2 = tail), and the alphabetical subscripts to the wing panel (R = right, L = left). The velocities are defined to be parallel to their associated rotor shaft.

If the four inputs are greater than 100, 100 is subtracted from each input, and the RWAS table with the corresponding input sequence number is then used to supply a number which replaces the appropriate XWG input in the above equations. For example, if XWG(30) = 104.0, the fourth RWAS table will be used to compute the velocity vector at the left wing panel due to the main rotor wake.

It is emphasized that if one effect is to be represented by a constant, all four effects must be represented by a constant; similarly, if one effect is to be represented by a table, all must be represented by a table. When using tables, care should be exercised to assure that the proper table is used. See Section 3.3.4 for a discussion of the RWAS tables. However, these restrictions on tables or constants apply only to a single aerodynamic surface; i.e., the type of representation used by the wing or any one of the four stabilizing surfaces does not affect the representation used by any other aerodynamic surface.

CARD 65 - 66

Inputs XWG(33) through XWG(42) are determined from Etkin (Reference 2, pp 486-495). They are used to calculate the wing contribution to static and dynamic stability. The static derivatives (those which are coefficients of β) may be included in the fuselage group aerodynamics or simulated with appropriate values of wing sweep and/or dihedral. If this is done, XWG(33), (34), (37) and (38) should be set to zero. It is not possible to simulate the dynamic derivatives (those which are coefficients of p and r) with any other section of the program. In the Force and Moment Summary of the program output, one-half of the increments to the rolling and yawing moments calculated from the equations below is added to each wing panel.

$$\Delta L_w = F\Big[\beta\ [XWG(33) + XWG(34)C_L] + ts\ [XWG(35)rC_L + XWG(36)p]\Big]$$

and

$$\Delta N_w = F\Big[\beta[XWG(37) + XWG(38)C_L{}^2] + ts[r\{XWG(39)C_L{}^2 + XWG(40)\ C_{D_o}\ \cos\ \beta\} + p\{XWG(41)C_L + XWG(42)\ (dC_D/d\alpha)\ \cos\ \beta\}]\Big]$$

where

$F = 0.5\rho SV^2B$

$ts = 0.5\ B/V$

V = airspeed

B = wing span

S = wing Area

β = sideslip angle

α = wing angle of attack

p = roll rate of fuselage in the stability axis system

r = yaw rate of fuselage in the stability axis system

L = roll moment of wings due to rates and sideslip

N = yaw moment of wings due to rates and sideslip

ΔL_w and ΔN_w are computed in the stability axis system and are resolved into the body axis system.

3.8.2 Aerodynamic Inputs for Stabilizing Surfaces and Wing

The last four cards of each aerodynamic surface input group are termed the aerodynamic inputs: YWG(1-28), YSTB1(1-28), YSTB2(1-28), YSTB3(1-28), and YSTB4(1-28). These inputs are used in conjunction with inputs from the corresponding XWG or XSTBi (i=1 to 4) arrays to compute the lift, drag, and pitching moment coefficients of each surface. The user has the option of specifying that the coefficients be computed from equations or obtained from data tables. In the following discussion, Y(I) refers to the Ith aerodynamic input, YWG(I) or YSTBi(I), for the appropriate aerodynamic surface and X(J) refers to the Jth input in the corresponding XWG or XSTBi array.

If the control variable Y(18) = 0, subroutine CLCD computes the aerodynamic coefficients from equations as functions of the angle of attack α; angle of sideslip, β; Mach number, M; surface planform geometry; and the spanwise efficiency factor, e. If Y(18) > 0, data tables are used to compute the coefficients as described at the end of this section and in the discussion of the Data Table Group.

When Y(18) = 0, the aerodynamic inputs are coefficients of equations which describe the infinite aspect ratio, or two-dimensional, aerodynamic coefficients of the airfoil section of the surface. It is assumed that the section is constant along the span and parallel to the longitudinal centerline of the aircraft. Subroutine CLCD then corrects the input data for finite aspect ratio, A; sweepback of the quarter chord line, $\Lambda_{1/4}$; sideslip angle between the airfoil section and local flow, β; change in maximum lift coefficient due to control surface deflection; and change in lift, drag, and pitching moment coefficients due to control surface deflection. Note that all angles of attack used in this model are zero lift line angles of attack. The model was developed to simulate the characteristics of the symmetrical airfoils. If cambered airfoils are to be modeled and the angle between the chord line and zero lift line of the section is more than a few degrees, it is suggested that data tables rather than equations be used.

The geometry and effectiveness of the surface are defined from the following inputs.

$\bar{y}$ = buttline of surface center of pressure = X(3)

$\Lambda_{1/4}$ = sweepback of quarter chord = X(7)

A = geometric aspect ratio = X(8)

e = spanwise efficiency factor = X(9)

λ = taper ratio of surface = X(10)

The spanwise efficiency factor, e, should be unity for the ideal case where the surface has an elliptical lift distribution and uniform downwash. However, the ideal case is the exception, not the rule, and the value of e is rarely unity. Factors which affect the value of e are the geometry of the surface (including aspect ratio, taper, and sweep) and the degree of end plating caused by adjacent structure.

Analytical prediction of e is difficult at best. A surface which has a large end plate, e.g., a T-tail, may have a value of e as high as 1.5 or more. A straight untapered, unswept surface may have a value of e as low as 0.6 or less. A typical value of e for un-end-plated aerodynamic surfaces on helicopters is about 0.7. The user should consult such text reference books as Etkin, DATCOM, Perkins and Hage, or Dommasch (References 2, 3, 4, and 5) to obtain a more intuitive feel for the value which should be chosen for this spanwise efficiency factor.

Using the above parameters, the sweepback of the half chord, $\Lambda_{1/2}$, is

$$\Lambda_{1/2} = \tan^{-1} [\tan \Lambda_{1/4} - (1 - \lambda)/(A(1 + \lambda))]$$

and the effective sweepback angle, Λ^*, and effective aspect ratio, A^*, are

$$\Lambda^* = \Lambda_{1/2} - (\text{sign } \bar{y})\beta$$

$$A^* = eA \cos^2 (\Lambda^*)/ \cos^2 (\Lambda_{1/2})$$

Let α_1 be the angle of attack input to CLCD and assume that

$$-180^\circ < \alpha_1 \leq 180^\circ$$

Then for unstalled flow the two-dimensional subsonic lift curve slope, a_o, is defined as

$$a_o = Y(8) + Y(9)M + Y(10)M^2 + Y(11)M^3$$

and the three-dimensional subsonic lift curve slope, a_1, as

$$a_1 = (2 \pi A^*/57.3)/\left[2 + \sqrt{(2 \pi A^*/a_o)^2\left[1 + \{\tan^2\Lambda^*/(1-M^2)\} \right] + 4} \right]$$

and the transonic lift curve slope, a_2, as

$$a_2 = B_0 + B_1 M + B_2 M^2$$

and the supersonic lift curve slope, a_3, as

$$a_3 = (4/57.3)/\sqrt{M^2 - 1}$$

The input value for the lower boundary of the supersonic region, Y(2), is checked against a calculated value M_{sc}:

$$M_s = \text{Max}\left\{Y(2),\ M_{sc}\right\}$$

where

$$M_{sc} = \sqrt{1 + [(4/57.3)/(a_1)_{CR}]^2}$$

and $(a_1)_{CR}$ is a_1 evaluated at the drag divergence Mach number, Y(1). The coefficients B_0, B_1, and B_2 are computed internally by equating a_1 and a_3, and the slopes of a_2 and a_3 as follows:

$$a_2 = a_1 \qquad \text{at } M = Y(1),\ \beta = 0$$

$$a_2 = a_3 \qquad \text{at } M = M_s$$

$$\frac{da_2}{dM} = \frac{da_3}{dM} \qquad \text{at } M = M_s$$

Then the lift curve slope of the surface for unstalled flow, a, is defined as

$$a = \begin{cases} a_1 & \text{if } M < Y(1) \\ a_2 & \text{if } Y(1) \leq M < M_s \\ a_3 & \text{if } M_s \leq M \end{cases}$$

Having determined the unstalled lift curve slope, subroutine CLCD establishes the curve of C_L versus α for all angles of attack.

If $|\alpha_1| \leq 90^\circ$, i.e., forward flight,

$$\alpha = |\alpha_1|$$

$$SG = \alpha_1/|\alpha_1|$$

$$C_{L_0} = Y(3) + SG(\Delta C_L)_{max}$$

$$K_L = Y(4)\ M + Y(5)\ M^2 + Y(6)\ M^3$$

$$\alpha_S = (C_{L_0} + K_L)/a$$

$$\alpha_B = \alpha_S + 5^\circ$$

where $(\Delta C_L)_{max}$ is the increment to the maximum lift coefficient due to control surface deflection, as calculated in the aerodynamic surface section.

If $|\alpha_1| > 90^\circ$, i.e., rearward flight or reversed flow,

$$\alpha = 180 \cdot |\alpha_1|$$

$$SG = -\alpha_1/|\alpha_1|$$

$$C_{L_0} = Y(7) + SG(\Delta C_L)_{max}$$

$$K_L = 0$$

$$\alpha_S = C_{L_0}/a$$

$$\alpha_B = \alpha_S + 5^\circ$$

For $0 \leq \alpha \leq \alpha_B$

$$C_L' = a\alpha$$

If $C_L' \leq C_{L_0}$ then.

$$C_L = C_L' + SG(\Delta C_L)_f$$

where $(\Delta C_L)_f$ is the increment to C_L due to flap deflection as calculated in the aerodynamic surface section.

If $C_L' > C_{L_0}$, then C_L is determined by linear interpolation in the following manner.

$$C_{L_{max}} = C_{L_0} + K_L + SG(\Delta C_L)_f$$

$$C_{L_B} = C_L \text{ at } \alpha = \alpha_B \text{ as discussed below.}$$

Then

$$C_L = C_{L_{max}} + (C_{L_{max}} - C_{L_B})(\alpha - \alpha_S)/5^\circ$$

In either case, the induced angle of attack, α_i, is

$$\alpha_i = C_L/\pi A^*$$

For $\alpha_B \leq \alpha \leq 90^\circ$, the lift coefficient is calculated from the following empirical expression for C_L as a function of the equivalent two-dimensional angle of attack, α_2,

$$C_L = \left[\{2\ C_{L_0} \sin \alpha_2 - .81\}K_3 + 0.81\right] \cos \alpha_2 + SG(\Delta C_L)_f$$

$$K_3 = \begin{cases} 1 + 0.25\ M^4 & \text{if } M \leq 1 \\ 0.84 + 0.082/(M-0.8) & \text{if } M > 1 \end{cases}$$

The value of C_{L_0} is based on the magnitude of α_1 as described above, and ΔC_L is the increment due to control surface deflection.

The angle α_2 is related to the angle α by the induced angle of attack, α_i.

$$\alpha_2 = \alpha - \alpha_i$$

where, as above, $\alpha_i = C_L/\pi\ A^*$

The angle α_2 represents the angle of attack needed on an infinite aspect ratio surface to provide the same lift as the aerodynamic surface in question.

Hence, C_L and α_i are functions of each other. Consequently, a small angle assumption is used for α_i and the above expressions for C_L, α_2, and α_i are rearranged to define α_i as a function of C_{L_0}, α, and K_3.

Then

$$C_L = \pi(A^*)\alpha_i$$

The form of the C_L vs. α curve is shown in Figure 3-2 for zero control surface deflection. At point P_1 in the figure

$$C_L = C_{L_0} + K_L$$

$$\alpha = \alpha_S = C_L/a$$

At point P_2 in Figure 3-2

$$\alpha = \alpha_B$$

and C_L is defined by the procedure discussed for $\alpha_B \leq \alpha \leq 90°$. Control surface deflection shifts the curve vertically and may change the difference between C_L at $\alpha = 0$ and C_L at $\alpha = \alpha_S$.

The form of the C_D vs. α curve is shown in Figure 3-3. At point P_3 in Figure 3-3, $\alpha = \alpha_x$ and $C_D = C_{D_x}$. The values of α_x and C_{D_x} are defined from the maximum value for nondivergent drag, Y(16); the stall angle, α_S; and the equation for nondivergent drag, $(C_D)_{ND}$.

$$(C_D)_{ND} = Y(12) + Y(13)\,\alpha_2 + Y(14)\,\alpha_2^{\,2} + (\Delta C_D)_f$$

$$+ \text{Max}\left\{0,\ Y(19)\,\alpha_2 - Y(1) + \text{Max}\left[M,\ 0.35\right]\right\}$$

where $\alpha_2 = \alpha - \alpha_i$, as in the model for lift coefficient,

$(\Delta C_D)_f$ = increment to profile drag due to control surface (flap) deflection and

$$C_{D_S} = (C_D)_{ND} \text{ evaluated at } \alpha_2 = \alpha_S - (\alpha_i)_S$$

If $C_{D_S} \leq Y(16)$

$$\alpha_X = \alpha_S - (\alpha_i)_S$$

$$C_{D_X} = C_{D_S}$$

If $C_{D_S} > Y(16)$

$$C_{D_X} = Y(16)$$

$$\alpha_X = \alpha_2 \text{ for } (C_D)_{ND} = Y(16)$$

Then, for $0 \leq \alpha \leq \alpha_X$

$$C_D = (C_D)_{ND}$$

and for $\alpha_X < \alpha \leq 90^\circ$

$$C_D = 2. + (\alpha_2 - 90^\circ)^2 (C_{D_X} - 2.)/(\alpha_X - 90^\circ)^2$$

In the supersonic region, $M > M_S$

$$C_D = \text{Min}\left\{ Y(16), \left(Y(12) + 4[(\alpha_2/57.3)^2 + Y(15)]/\sqrt{M^2 - 1} \right) \right\}$$

The value usually used for Y(15) is 0.04. The supersonic lift and drag for the wing and stabilizing surfaces is deemphasized because this computer program was never intended to simulate such high speed flight. The supersonic functions are included primarily because the C_L and C_D calculations were originally developed for the rotors and later applied to the other aerodynamic surfaces. A secondary reason for this inclusion is to maintain the similarity between the input and mathematical models used for the aerodynamic surfaces (CLCD subroutine) and the rotors (CDCL subroutine).

Once determined, the C_L and C_D coefficients are assumed to act in an axis system which is pitched up α_i degrees with respect to the wind vector. Consequently, before returning the value of C_L and C_D to the aerodynamic surface section of the program, they are resolved back to wind axis:

$$C_{L_{wind}} = C_L \cos \alpha_i - C_D \sin \alpha_i * SG$$

$$C_{D_{wind}} = C_D \cos \alpha_i + C_L \sin \alpha_i * SG$$

The calculation of the aerodynamic pitching moment is performed in the same manner as for the rotor except that the section pitching moment coefficient, Y(25), is modified for sweep and aspect ratio effects. That is, substitute the following expression for Y(25) in the rotor discussion:

$$Y(25)\ A^* \cos^2(\Lambda_{1/4})/(A^* + 2\cos(\Lambda_{1/4})) + (\Delta C_M)_f$$

where $(\Delta C_M)_f$ is the increment to pitching moment due to control surface (flap) deflection.

It is possible to use sets of data tables for determining the aerodynamic coefficients as a function of α and M. The tables available for use are those input to the Data Table Group.

If Y(18) > 0, the Y(18)th airfoil data table is used to determine the coefficients as functions of α_1 and M.

CAUTION:

Coefficients obtained from tables are <u>not</u> corrected for aspect ratio or sweep effects. Hence, the data in tables to be used by aerodynamic surfaces must be for the specific surface which is being simulated, i.e., three-dimensional test data at zero sideslip. Data from tables are corrected for yawed flow and control surface deflection as follows:

$$C_L = [(C_L)_{Table} + (\Delta C_L)_f] \cos^2 (\Lambda^*)/\cos (\Lambda_{1/2})$$

$$C_D = [(C_D)_{Table} + (\Delta C_D)_f]$$

$$C_M = [(C_M)_{Table} + (\Delta C_M)_f] \cos^2 (\Lambda^*)/\cos (\Lambda_{1/2})$$

NOTE:

If tables are used by the wing, the wing aerodynamic inputs should still be input to provide a realistic value for the stall angle, α_S.

This angle is used in computing the effect of the wing on the flow field at the stabilizing surfaces.

3.8.2.1 Flow Field at Stabilizing Surfaces due to Wing

As mentioned in the discussion of Stabilizing Surface No. 1, the wing can affect the flow field at the stabilizing surfaces. It does so in the following manner.

A dynamic pressure reduction at each surface due to the wing is calculated using XWG(11) and (13). The equations used were taken from NACA Report Number 648, Reference 7. The general situation is shown in Figure 3-8.

The deflection of the centerline of the wing wake from the free-stream direction, ϵ_{wake}, is calculated from XWG(13).

$$\epsilon_{wake} = XWG(13)\ C_{L_{wing}}$$

The dynamic pressure loss, η_q, is represented as a fractional part of the free-stream value such that

$$q_{reduced} = q_{free\ stream}(1-\eta_q)$$

The maximum value of η_q occurs at the center of the wing wake and at the trailing edge of the wing. The input XWG(11) is used to determine this maximum reduction, $\eta_{q_{max}}$.

$$\eta_{q_{max}} = XWG(11)\left[C_{D_{wing}}\right]^{1/2}$$

Then the dynamic pressure loss may be calculated at any point inside the wing wake.

$$\eta_q = \frac{\eta_{q_{max}} \cos^2 (\pi\ D/2h)}{(\xi + 0.3)}$$

where

- D is the vertical distance from the centerline of the wake to the elevator (as shown in Figure 3-8),
- h is the half width of the wing wake at the elevator station, and
- ξ is the distance of the elevator behind the wing trailing edge normalized by the wing mean aerodynamic chord (as shown in Figure 3-8).

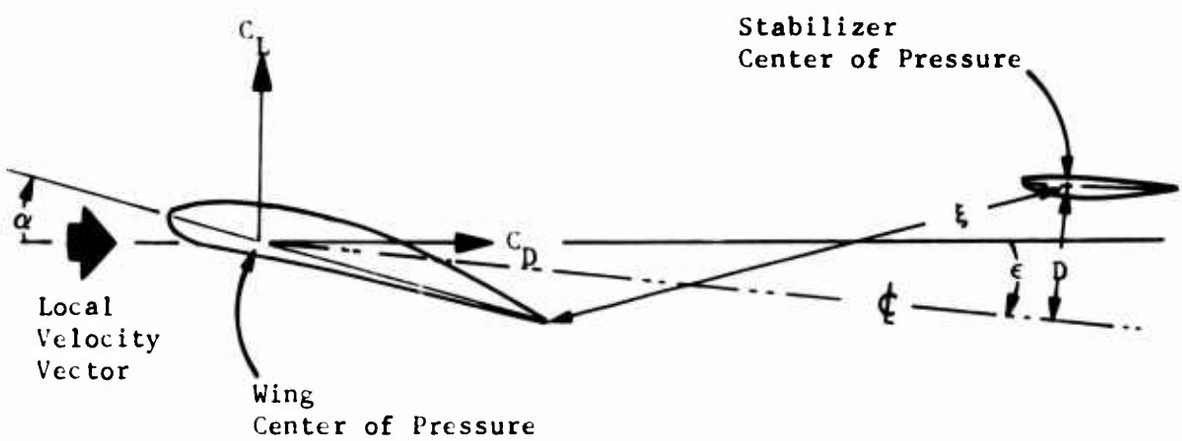

$\mathbb{C}$ is the centerline of the wing wake.

The figure is in the body X-Z plane.

Figure 3-8. Wing Wake Model.

D, h, and ξ are internally calculated based on wing/stabilizing surface geometry and aerodynamics.

In addition, a downwash angle at each surface due to the wing is computed using the 13th input of the appropriate stabilizing surface, e.g., XSTB1(13) for Surface No. 1. The angle for Surface No. 1 is then

$$\epsilon_{wash} = XSTB1(13)\ C_{L_{wing}}$$

Note that although XWG(13) and XSTB1(13) are used in similar looking equations, they are different inputs and in most cases have different values.

Using ϵ_{wash} and η_q, the flow field is then modified at the stabilizing surface in the same manner as was done for the wash and dynamic pressure reduction at the surface due to the fuselage.

See Section 3.1.2 for the discussion of the wing aerodynamic computations.

3.8.3 Control Linkage Inputs

Because of the similarity of the control linkage models for the wing and the stabilizing surfaces, the control linkage inputs for both are discussed in this section. The wing controls subgroup is XCWG, while the corresponding subgroups for the stabilizing surfaces are XCS1, XCS2, XCS3, and XCS4 for the first, second, third and fourth surfaces, respectively. In the following discussion, the term XCSj(I) refers to the Ith input of the jth stabilizing surface linkage subgroup. The wing linkage subgroup can be considered equivalent to the zeroth surface subgroup, i.e., XCS0(I) is synonymous with XCSW(I). Similarly, XSTBj(K) refers to the Kth input of jth basic surface group with XSTB0(K) and XWG(K) being equivalent.

The inputs to each subgroup define the control linkages from the primary flight controls and the F/A mast tilt angle of Rotor 1 to the incidence or control surface deflection angles of the corresponding aerodynamic surface. The linkages can be either linear or parabolic.

The reading of XCWG is controlled by IPL(9). If IPL(9) $>$ 0, the XCWG inputs (CARDS 6B and 6C) must be included; if IPL(9) $\leq$ 0, the two cards must be omitted.

The read-in of the linkage subgroup for the stabilizing surfaces is controlled by IPL(10). If IPL(10) $>$ 0, then each of the IPL(10) surface groups input must include a linkage subgroup; if IPL(10) $\leq$ 0, all linkage subgroups must be omitted.

Each subgroup uses the identical input format and the same mathematical model for calculating the increments to be added to the incidence or control surface deflection angle of the surface. However, the wing is divided into left and right panels with the inputs controlling the right panel. For collective or F/A cyclic stick linkages, the increments are added to each wing panel symmetrically; for lateral cyclic stick or pedal position linkages, the increments for the left panel are the negative of those on the right, i.e., asymmetric deflection.

The primary flight controls cannot be linked to incidence and control surface deflection simultaneously. If XCSj(7) = 0, control linkages will change only the incidence angle, XSTBj(5), of the surface. If XCSj(7) $\neq$ 0, the linkage will change only the control surface deflection, XSTBj(14). During maneuvers, incidence and/or control surface deflection may be changed independently of the control linkages described in this section (see Section 3.21.2.27). Either or both angles can be changed in maneuver regardless of the value of XSCj(7).

XCSj(3), (6), (10), and (13) define breakpoints in the curves of the control linkages. These breakpoints permit control linkages which provide a zero increment to the appropriate angle of the surface if the control is to one side of the breakpoint and a nonzero value when the control is to the opposite side.

If XCSj(3) = 0.0, the increment for the jth surface due to collective stick displacement is

$$(\Delta i_1)_j = XCSj(1) * K_1 + XCSj(2) * K_1^2$$

If XCSj(6) = 0.0, the increment for the jth surface due to F/A cyclic stick displacement is

$$(\Delta i_2)_j = XCSj(4) * K_2 + XCSj(5) * K_2^2$$

If XCSj(10) = 0.0, the increment for the jth surface due to lateral cyclic stick displacement is

$$(\Delta i_3)_j = XCSj(8) * K_3 + XCSj(9) * K_3^2$$

If XCSj(13) = 0.0, the increment for the jth surface due to pedal displacement is

$$(\Delta i_4)_j = XCSj(11) * K_4 + XCSj(12) * K_4^2$$

where K_1, K_2, K_3, and K_4 are the control deflections in inches from the 50 percent control position. The total increment to the appropriate angle of the jth surface due to the primary flight controls is then

$$\Delta i_j = (\Delta i_1)_j + (\Delta i_2)_j + (\Delta i_3)_j + (\Delta i_4)_j$$

The effect of a nonzero breakpoint for the collective stick linkage, XCSj(3) $\neq$ 0, is discussed below. The effect of nonzero XCSj(6), (10), and (13) is identical.

If XCSj(3) > 0, then the control linkage is active only when the magnitude of the stick position is greater than the breakpoint, i.e.,

$$(\Delta i_1)_j = 0, \text{ if } \delta_{COLL} \leq XCSj(3)$$
$$= XCSj(1) * k_1 + XCSj(2) * k_1^2, \text{ if } \delta_{COLL} > XCSj(3)$$

and if XCSj(3) < 0, then the control linkage is active only when the magnitude of the stick position is less than the magnitude of the breakpoint, i.e.,

$$(\Delta i_1)_j = 0, \text{ if } \delta_{COLL} \geq |XCSj(3)|$$
$$= XCSj(1) * k_1 + XCSj(2) * k_1^2, \text{ if } \delta_{COLL} < |XCSj(3)|$$

where $k_1 = (\delta_{COLL} - |XCSj(3)|) * XCON(1)/100$.

For constant values of XCSj(1) and (2), the effect of the breakpoint on the increment is shown in Figure 3-9.

Similarly, the increment due to F/A cyclic with XCSj(6) $\neq$ 0 is as follows:

if XCSj(6) > 0,

$$(\Delta i_2)_j = 0 \text{ if } \delta_{F/A} \leq XCSj(6)$$
$$= XCSj(4) * k_2 + XCSj(5) * k_2^2 \text{ if } \delta_{F/A} > XCSj(6)$$

and if XCSj(6) < 0,

$$(\Delta i_2)_j = 0 \text{ if } \delta_{F/A} \geq |XCSj(6)|$$
$$= XCSj(4) * k_2 + XCSj(5) * k_2^2 \text{ if } \delta_{F/A} < |XCSj(6)|$$

where $k_2 = (\delta_{F/A} - |XCSj(6)|) * XCON(7)/100$

For the stabilizing surfaces, the increments due to lateral cyclic, $(\Delta i_3)_j$, are computed similarly by replacing XCSj(4), (5), and (6) with XCSj(8), (9), and (10) plus replacing $\delta_{F/A}$ and XCON(7) with δ_{LAT} and

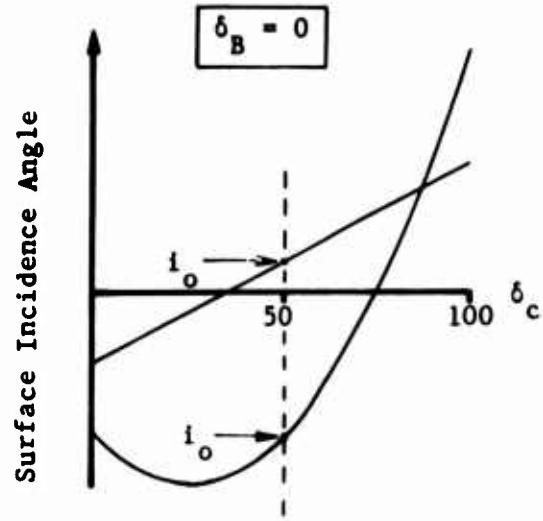

(a) Linear and parabolic linkages, no breakpoint.

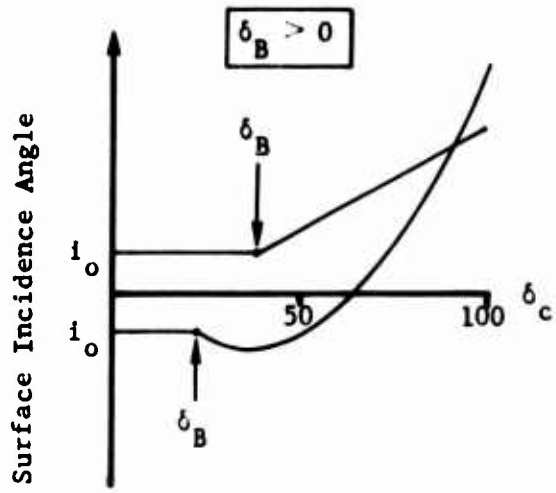

(b) Linear and parabolic linkages, positive breakpoint.

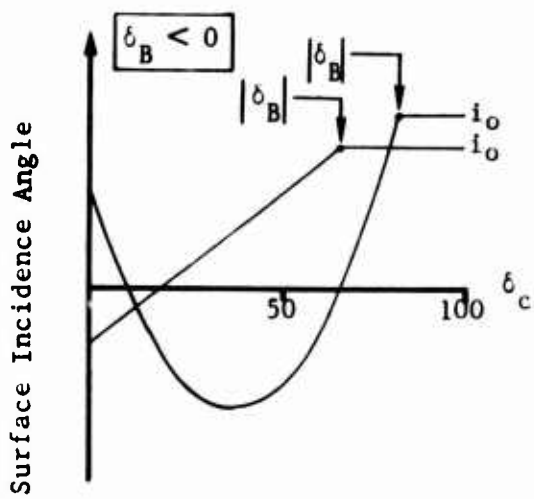

(c) Linear and parabolic linkages, negative breakpoint.

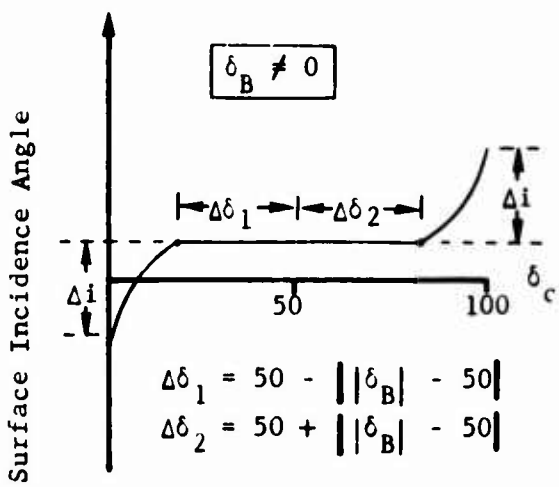

(d) Parabolic linkages from pedals or lateral cyclic to wing, non-zero breakpoint.

δ_c = Control position, percent of full throw

δ_B = Control position for breakpoint, percent

i_o = Basic (input) incidence angle for surface, degrees

Figure 3-9. Aerodynamic Surface Control Linkages.

XCON(15). For the increment due to pedal, $(\Delta i_4)_j$, XCSj(11), (12), (13), δ_{PED}, and XCON(22) are substituted.

For the lateral cyclic and pedal linkages to the wing angles, nonzero breakpoints, XCWG(10) or (13), operate in a slightly different manner from that discussed above. As shown in Figure 3-9 the linkage is asymmetrical about the 50% control position. In equation form, the increment added to the right panel is

$$(\Delta i_3)_0 = XCWG(8) * k_3 + XCWG(9) * k_3^2$$

where

$$k_3 = \begin{cases} (\delta_{LAT} - \delta_2) * XCON(17)/100, & \text{if } \delta_{LAT} > \delta_2 \\ (\delta_{LAT} - \delta_1) * XCON(17)/100, & \text{if } \delta_{LAT} < \delta_1 \\ 0, & \text{if } \delta_1 \leq \delta_{LAT} \leq \delta_2 \end{cases}$$

and

$$\left.\begin{aligned} \delta_1 &= 50 - XCWG(10) \\ \delta_2 &= 50 + XCWG(10) \end{aligned}\right\} \quad XCWG(10) > 0$$

The increment added to the left wing panel is the negative of the increment added to the right panel. The increment to each panel due to pedal position is handled in the identical manner.

An increment, Δi_m, can be added to the appropriate surface angle as a function of the F/A mast tilt of Rotor 1.

$$(\Delta i_m)_j = XCSj(14) * (\text{F/A mast tilt angle})$$

The total increment to the appropriate angle of the jth surface is then

$$\Delta i_j = (\Delta i_1)_j + (\Delta i_2)_j + (\Delta i_3)_j + (\Delta i_4)_j + (\Delta i_m)_j$$

If XCSj(7) = 0, the geometric angle of incidence for the jth surface is then

$$i_j = \Delta i_j + XSTBj(5)$$

and the control surface angle is

$$\delta_j = XSTBj(14)$$

If XCSj(7) $\neq$ 0,

$$i_j = XSTBj(5)$$

and

$$\delta_j = \Delta i_j + XSTBj(14)$$

Increments due to J Cards (J = 36) are then added to the above values.

3.9 STABILIZING SURFACE GROUPS

3.9.1 Surface No. 1 (include only if $|IPL(10)| \geq 1$)

CARD 71

Stabilizing surface area should include carry-through area if any.

Location of the center of pressure is the point of application of lift and drag forces used to determine moments about the aircraft center of gravity due to these forces.

XSTB1(5) is the incidence angle of the surface when all primary flight controls are at 50 percent and the control surface deflection is zero. If equations are being used, this angle should be the zero lift line angle; if tables are used, it should be the chord-line incidence. Positive incidence is a right-handed rotation about the positive axis of incidence change; e.g., for a horizontal surface, positive incidence is leading edge up.

The axis of incidence change is assumed to lie in the body Y-Z plane which contains the center of pressure of the surface, i.e., the plane at stationline XSTB1(2). The dihedral angle, XSTB1(6), is the angle in this Y-Z plane between the Y-axis (horizontal) and the axis of incidence change. At XSTB1(6) = 0, the positive axis of incidence change is parallel to the positive body Y-axis. If the surface is on the right side of the aircraft, the dihedral angle is positive for the right hand, or outboard, tip up (i.e., if the cp buttline, XSTB1(3), is greater than zero, positive dihedral, XSTB1(6), is a left-handed rotation about an axis parallel to the positive body X-axis). If the surface is on the centerline or left side of the aircraft, the dihedral angle is positive for the left hand, or outboard, tip up (i.e., if the cp buttline is equal to or less than zero, positive dihedral is a right-handed rotation about an axis parallel to the positive body X-axis). See Figure 3-7.

The sweepback angle of the quarter chord, XSTB1(7), is positive aft and lies in the plane formed by the axis of incidence change and the zero lift line.

CARD 72

Aspect ratio, spanwise efficiency factor, and taper ratio (XSTB1(8), (9), and (10) respectively) are identical to the corresponding wing inputs (XWG(8), (9), and (10) respectively).

The tail-boom bending coefficient, XSTB1(11), reduces the lift coefficient on the surface by the formula

$$C_L = C_L/[1 + XSTB1(11)*q_s*S_s*C_L/\alpha]$$

where C_L = lift coefficient from subroutine CLCD

q_s = dynamic pressure at the surface

S_s = area of the surface

α = angle of attack of the surface (in radians)

C_L = lift coefficient used for the surface

XSTB1(12) and XSTB1(13) are discussed in Section 3.9.1.1.

Positive control surface deflection, XSTB1(14), is defined in the same direction as positive zero lift line incidence, i.e., a right-handed rotation about the positive axis of incidence change. For a horizontal surface this corresponds to trailing edge down.

CARDS 73 and 74

The inputs for changing the lift, drag, and pitching moment of a stabilizing surface with control deflection are identical to those for the wing. See CARDS 63 and 64 in Section 3.8.1, and substitute XSTB1 for XWG. See the following section for a discussion of XSTB1(24) through (28) which are on CARD 74.

3.9.1.1 Flow Field at the Stabilizers

Inputs XSTB1(12), (13), and (24) through (34) define the flow field at the surface in the following manner.

The downwash angles at the surface due to the fuselage are defined according to the type of fuselage equation which is being used, i.e., Nominal Angle, High Angle, or Phased.

If the Nominal Angle fuselage equations are being used,

$$\epsilon_f = \epsilon_L = [XSTB1(24)*DTR + 0.5*XSTB1(25)*\sin(2\theta_w)]*$$
$$[1 + 0.25*RTD*XSTB1(26)*\sin^2(2\psi_w)]$$

$$\sigma_f = \sigma_L = [XSTB1(27) + 0.25*RTD^2*XSTB1(28)*\sin^2(2\theta_w)]*0.5*\sin(2\psi_w)$$

where θ_w and ψ_w are the fuselage aerodynamic pitch and yaw angles respectively, and ϵ_f and σ_f are in radians.

Note that the above equation can be approximated for small angles as

$$\epsilon_L' \approx (XSTB1(24) + XSTB1(25)*\theta_w)(1 + XSTB1(26)*\psi_w^2)$$

$$\sigma_L' \approx (XSTB1(27) + XSTB1(28)*\theta_w^2)*\psi_w$$

where θ_w, ψ_w, ϵ'_L, and σ'_L are all in degrees.

In the phasing region

$$\epsilon_f = \epsilon_L * \cos^2(\alpha_{ph})$$

$$\sigma_f = \sigma_L * \cos^2(\alpha_{ph})$$

where α_{ph} is the phasing angle defined in the fuselage discussion (Section 3.4.2).

If the High Angle fuselage equations are being used,

$$\epsilon_f = \sigma_f = 0$$

The body axis components of the free-stream velocity are assumed to be acting in an axis system which is yawed σ_f and pitched ϵ_f with respect to the body axis. These velocities are resolved back to body axis and multiplied by the dynamic pressure ratio factor $\sqrt{1 - XSTB1(12)}$.

If the wing group is included, downwash and dynamic pressure loss at the surface due to the wing will be computed as discussed in the Wing Group section. If the wing is excluded, these calculations will be bypassed, and the value of XSTB1(13) will be ignored.

Inputs XSTB1(29) through (34) control the effect of the rotor wake on the flow field at the surface. If XSTB1(29) and (32) are greater than 100, RWAS tables will be used to compute the effect in the same manner as is done for the wing (see CARD 65 in Section 3.8.1). In this case, XSTB1(30), (31), (33), and (34) are ignored. If both inputs are less than or equal to 100, the effect will be computed in a manner similar to that for the wing. The difference is that the two inputs following XSTB1(29) and (32) define the body axis X velocities at which the surface starts to enter the wake and is completely within the wake. See Figure 3-10. As with the wing, both effects must be represented by constants or both by tables.

3.9.1.2 Aerodynamic Inputs

See Section 3.8.2 for discussion of the aerodynamic computations.

3.9.1.3 Control Linkage Inputs (include only if IPL(10) $\geq$ 1)

The stabilizing surfaces use the identical mathematical model and input format as the wing for linking the surface incidence or control surface deflection to the primary flight controls. See Section 3.8.3, and replace XCWG with XCS1 in the discussion.

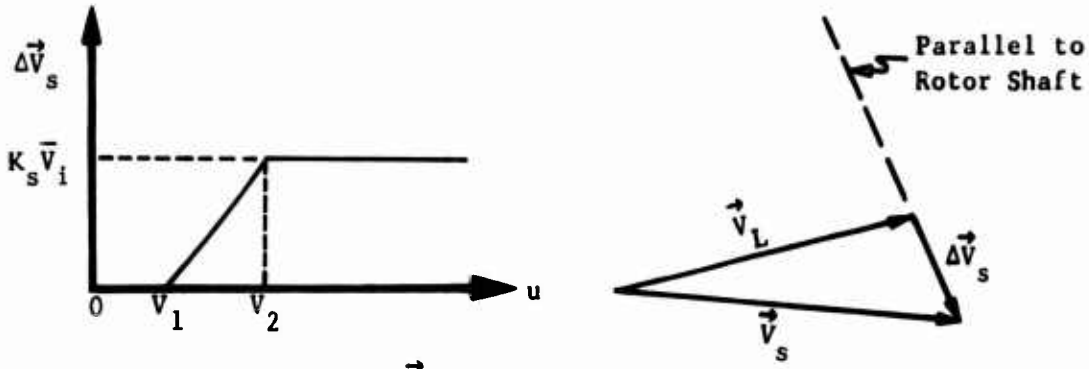

(a) Computation of $\Delta\vec{V}_s$ (b) Local Flow with Downwash

$\vec{V}_L$ = local velocity vector at stabilizer excluding rotor downwash

$\Delta\vec{V}_s$ = change in $\vec{V}_L$ due to rotor wake

$\vec{V}_s = \vec{V}_L + \Delta\vec{V}_s$

$\bar{V}_i$ = average induced velocity across the rotor disc, parallel to the rotor shaft

u = body X axis component of flight path velocity V

K_s = XSTB1(29), main rotor induced velocity factor

V_1 = XSTB1(30), the u velocity at which the stabilizer enters the rotor downwash

V_2 = XSTB1(31), the u velocity at which the stabilizer is completely immersed in rotor downwash

NOTE: V_1 must not be greater than V_2. Although it is permissible for V_1 to equal V_2, this is actually a contradiction: the surface can't start to enter and be completely immersed in the downwash at the same velocity. Hence, if $V_1 = V_2$, the following definition applies:

$$\left|\Delta\vec{V}_s\right| = \begin{cases} 0.0 \text{ if } u \leq V_2 \\ K_s\,\bar{V}_i \text{ if } u > V_2 \end{cases}$$

Figure 3-10. Effect of Rotor Downwash on the Flow Field at the Stabilizing Surfaces.

3.9.2 Surface No. 2 (include only if $|IPL(10)| \geq 2$)

The mathematical model for Stabilizing Surface No. 2 is identical to that for Stabilizing Surface No. 1. Refer to the section on Surface No. 1, and substitute XSTB2 for XSTB1 in the discussion. Include the control linkage inputs (XCS2) only if $IPL(10) \geq 2$.

3.9.3 Surface No. 3 (include only if $|IPL(10)| \geq 3$)

The mathematical model for Stabilizing Surface No. 3 is identical to that for Stabilizing Surface No. 1. Refer to the section on Surface No. 1, and substitute XSTB3 for XSTB1 in the discussion. Include the control linkage inputs (XCS3) only if $IPL(10) \geq 3$.

3.9.4 Surface No. 4 (include only if $|IPL(10)| = 4$)

The mathematical model for Stabilizing Surface No. 4 is identical to that for Stabilizing Surface No. 1. Refer to the section on Surface No. 1, and substitute XSTB4 for XSTB1 in the discussion. Include the control linkage inputs (XCS4) only if $IPL(10) = 4$.

3.10 JET GROUP (omit entire group if IPL(11) = 0)

CARD 111

The number of controllable jets, XJET(1), defines which of the two jet thrusts can be linked to the flight controls. If XJET(1) = 0.0, neither jet can be controlled. In this case all four jet control linkages in the Controls Group (i.e., XCON(6), XCON(13), XCON(20), and XCON(27) described in Section 3.12.1) must be zero. If they are not, program execution will terminate during initialization.

If XJET(1) = 1.0, only the right (first) jet thrust, XJET(2), can be changed by control motion. If XJET(1) = 2.0, both jet thrusts can be changed by control motion. During maneuvers, either jet thrust may be changed independently of the value of XJET(1) and the control linkages, as discussed in Section 3.21.2.8. The location of the right jet is the point of application of its thrust. The left (second) jet is located at the same stationline and waterline as the right jet, but at Buttline -XJET(5). It is not necessary that the right (first) jet be located on the right side of the rotorcraft. However, it will be labeled in the output as the right jet regardless of its location. Similarly, the left (second) jet buttline location is always -XJET(5) and will always be labeled as the left jet.

CARD 112

The jet thrust vectors are oriented with respect to the body reference system by a set of ordered rotations: yaw, then pitch. For the right jet, the rotations are right-handed while for the left jet they are left-handed. Hence, both the location and orientation of the two thrust vectors are symmetrical about the body X-Z plane.

For XJET(2) and XJET(3) positive and XJET(8) = XJET(9) = 0.0, both vectors are parallel to the body X-axis and cause positive (forward) forces in the body reference system. A positive yaw angle will then cause a right (positive) body Y-force from the right jet and a left (negative) body Y-force from the left jet. Positive pitch angle will cause an upward (negative) body Z-force from both jets.

3.11 EXTERNAL STORE/AERODYNAMIC BRAKE GROUP (omit entire group if IPL(12) = 0)

This group consists of exactly IPL(12) Store/Brake subgroups. The sequence number of the subgroup is the same as the input sequence. Each subgroup uses the same input format and mathematical model. A single subgroup is intended to represent a single store/brake, and all subgroups are mutually independent.

3.11.1 Store/Brake No. 1 (include only if IPL(12) $\geq$ 1)

The weight input, XST1(1), defines how the subgroup is to be used. This weight must not be included in the aircraft gross weight, XFS(1). If XST1(1) = 0, all calculations for this subgroup are bypassed. If XST1(1) > 0, the subgroup is defined to be an external store.

Prior to starting the TRIM procedure, the store weight and inertias (XST1(1) and XST1(8) through XST1(11)) are added to the weight and appropriate inertial inputs in the Fuselage Group, XFS(1) and XFS(8→11). The aircraft cg and inertias are then recalculated for each external store subgroup. When a store is dropped in the maneuver section, the aircraft weight, cg, and inertias are recalculated to reflect the jettison. Note that when using the sweep option (NPART = 10), the baseline values of aircraft weight, cg, and inertias, XFS(1) and XFS(5) through XFS(11), change only when changed by NAMELIST inputs. The recalculated values are never carried forward to subsequent cases. Consequently, the recalculation procedure is performed at the start of each and every case in the sweep using the current values of baseline and store weight, cg, and inertias, i.e., XFS(1), XFS(5) through XFS(11), XST1(1) through XST1(4), and XST1(8) through XST1(11).

If XST1(1) < 0, the subgroup is defined to be an aerodynamic brake. A brake is assumed to be an integral part of the airframe with its weight and inertias included in the inputs to the Fuselage Group. Aircraft weight, cg, and inertias are not recalculated.

In the maneuver section, only store subgroups can be dropped (J = 35), and only brake subgroups can be deployed (J = 34). J-Card inputs which command otherwise, i.e., drop a brake or deploy a store, will terminate execution.

The aerodynamic forces of both stores and brakes act at the center of pressure. The cp is assumed to be at the same buttline and waterline as the store/brake cg. The cp stationline is calculated by

$$(SL)_{cp} = XST1(2) + XST1(5) + XST1(6) * \sin^2\alpha_{sc}$$

The dynamic pressure loss ratio, XST1(7), is the ratio of local dynamic pressure loss at the store/brake to free-stream dynamic pressure neglecting

rotor downwash. An input of zero indicates that the total free-stream dynamic pressure acts at the store/brake.

The inertias are those of the store about its own cg and are not to be included in the inertias in the Fuselage Group.

CARD 121B

Induced velocity factor is the fraction of the induced velocity at the rotor disc which acts at the store/brake c.p. With no interference and a fully developed downwash, this factor would theoretically be 2.0. In practice, it would be less than 2.0 due to interference effects, non-uniform downwash, and the rotor wake not being fully contracted.

The lift, drag and side forces calculated are each multiplied by XST1(14)/100 to simulate aerodynamic brake deployment. If XST1(1) indicates that a store is to be simulated, XST1(14) is reset to 100%.

CARD 121C

The wind axis aerodynamic forces on the store/brake are calculated from the following equations. These forces are separate aerodynamic forces and are not included in the forces generated by any other group (component of the aircraft).

$$\text{Lift} = q_s\,[\text{XST1(15)}*\cos\psi_s + \text{XST1(16)}*\sin(2\theta_s)*\cos\psi_s]$$

$$\text{Drag} = q_s\,[\text{XST1(17)}*(\cos^2\psi_s)*(\cos^2\theta_s) + \text{XST1(18)}*\sin^2\psi_s + \text{XST1(19)}*(\cos^2\psi_s)*(\sin^2\theta_s)]$$

$$\text{Side Force} = q_s\,[\text{XST1(20)}*\cos^2\theta_s + \text{XST1(21)}*\sin(2\psi_s)*\cos^2\theta_s]$$

$$\text{where } V_s = \sqrt{1-\text{XST1(7)}} * V_{\text{free stream}} + \text{XST1(12)}*(\bar{V}_i)_{M/R} + \text{XST1(13)} * (\bar{V}_i)_{T/R}$$

$$q_s = 0.5\rho*V_s^{\,2}*\text{XST1(14)}/100$$

$$\theta_s = \tan^{-1}(w_s/u_s)$$

$$\psi_s = -\sin^{-1}(v_s/V_s)$$

$$\alpha_{sc} = \sin^{-1}(u_s/V_s)$$

u_s = body axis x component of V_s at store/brake

v_s = body axis y component of V_s at store/brake

w_s = body axis z component of V_s at store/brake

$\bar{V}_i$ = average induced velocity at disc of specified rotor

3.11.2 Store/Brake No. 2 (include only if IPL(12) $\geq$ 2)

CARDS 122A, 122B, and 122C contain the inputs for Store/Brake No. 2. Refer to the section on Store/Brake No. 1, and substitute XST2(I) for XST1(I).

3.11.3 Store/Brake No. 3 (include only if IPL(12) $\geq$ 3)

CARDS 123A, 123B, and 123C contain the inputs for Store/Brake No. 3. Refer to the section on Store Brake No. 1, and substitute XST3(I) for XST1(I).

3.11.4 Store/Brake No. 4 (include only if IPL(12) = 4)

CARDS 124A, 124B, and 124C contain the inputs for Store/Brake No. 4. Refer to the section on Store/Brake No. 1, and substitute XST4(I) for XST1(I).

3.12 ROTOR CONTROLS GROUP

The Controls Group is divided into two subgroups: Basic and Supplemental. The Basic Rotor Controls subgroup is a required input. The reading of the Supplemental Rotor Controls subgroup is controlled by IPL(13). This optional subgroup is only necessary input for tandem and side-by-side rotor configurations although it can also be used to simulate very complex control systems for single main rotor helicopters. Figure 3-11 is a schematic diagram of the complete AGAJ73 rotor control system. The Controls Group defines the linkages between the pilot controls and rotors for a rigid pylon, no collective bobweight, and SCAS off, i.e., the blocks labelled "BASIC RIGGING", "NONLINEAR RIGGING", and "CONTROL COUPLING/ MIXING BOX" in Figure 3-11. The outputs of the rotor controls mathematical model are the root collective blade angle and swashplate angles of each rotor.

The models for the rotor controls, pylon coupling bobweight, and SCAS are mutually independent. That is, the value of any output of any one model does not affect the value of the outputs of any other model. The outputs of the last three models are treated as increments which are added to the appropriate output of the rotor controls model.

3.12.1 Basic Rotor Controls Subgroup

The inputs on CARDS 131 through 134 are termed the Basic Rotor Control, or XCON, inputs. These inputs define the basic linkages between each of the four primary flight controls (collective, F/A cyclic and lateral cyclic sticks, and pedal position) and control angles. All linkages are linear and uncoupled and are normally the only Rotor Controls Group inputs needed for a single-main-rotor helicopter. With these linkages the collective stick controls only the root collective pitch of the main rotor (Rotor 1); the F/A cyclic stick controls only the F/A swashplate and the lateral cyclic only the lateral swashplate of the main rotor; and the pedals control only the root collective pitch of the tail rotor (Rotor 2). The cyclic pitch on the tail rotor is defined to be zero.

The equations for the control angles computed from the XCON inputs are given in Table 3-11. Note that the fourth input on each of the four cards can be used to lock the appropriate control angle at the value of the fifth input on the same card.

The sixth input on each card is the linkage between the specified control and jet thrust. The equations for the individual increments to the jet thrust and the total jet thrust are also given in Table 3-11. The jet to which the controls are linked is a function of XJET(1) in the Jet Group. Also, the increment to jet thrust is proportional to the difference between the control position input to the Flight Constants Group and the current control position during the trim iterations or maneuver time history. That is, the change in jet thrust is proportional to a change in control position, not the absolute value of that control position.

TABLE 3-11. BASIC ROTOR CONTROL RIGGING

Rotor 1

$$(\theta_o)_1 = \begin{cases} XCON(2) + XCON(3)*\delta_{COLL}/100 & \text{if } XCON(4) = 0 \\ XCON(5) & \text{if } XCON(4) \neq 0 \end{cases}$$

$$(B_1)_1 = \begin{cases} XCON(9) + XCON(10)*\delta_{F/A}/100 & \text{if } XCON(11) = 0 \\ XCON(12) & \text{if } XCON(11) \neq 0 \end{cases}$$

$$(A_1)_1 = \begin{cases} XCON(16) + XCON(17)*\delta_{LAT}/100 & \text{if } XCON(18) = 0 \\ XCON(19) & \text{if } XCON(18) \neq 0 \end{cases}$$

Rotor 2

$$(\theta_o)_2 = \begin{cases} XCON(23) + XCON(24)*\delta_{PED}/100 & \text{if } XCON(25) = 0 \\ XCON(26) & \text{if } XCON(25) \neq 0 \end{cases}$$

Jets

$$(\Delta T_{JET})_1 = XCON(6)*XCON(1)*[\delta_{COLL} - XFC(8)]/100$$

$$(\Delta T_{JET})_2 = XCON(13)*XCON(8)*[\delta_{F/A} - XFC(9)]/100$$

$$(\Delta T_{JET})_3 = XCON(20)*XCON(15)*[\delta_{LAT} - XFC(10)]/100$$

$$(\Delta T_{JET})_4 = XCON(27)*XCON(22)*[\delta_{PED} - XFC(11)]/100$$

$$T_{JET} = (T_{JET})_{INPUT} + \sum_{i=1}^{4} (\Delta T_{JET})_i$$

δ_{COLL} = Collective stick position in percent from full down

$\delta_{F/A}$ = F/A cyclic stick position in percent from full aft

δ_{LAT} = Lateral cyclic stick position in percent from full left

δ_{ped} = Pedal position in percent from full right

XFC(8) = Input value of δ_{COLL} (%)

XFC(9) = Input value of $\delta_{F/A}$ (%)

XFC(10) = Input value of δ_{LAT} (%)

XFC(12) = Input value of δ_{PED} (%)

$(T_{JET})_{INPUT}$ = Thrust of controllable jet(s), XJET(2) and/or XJET(3)

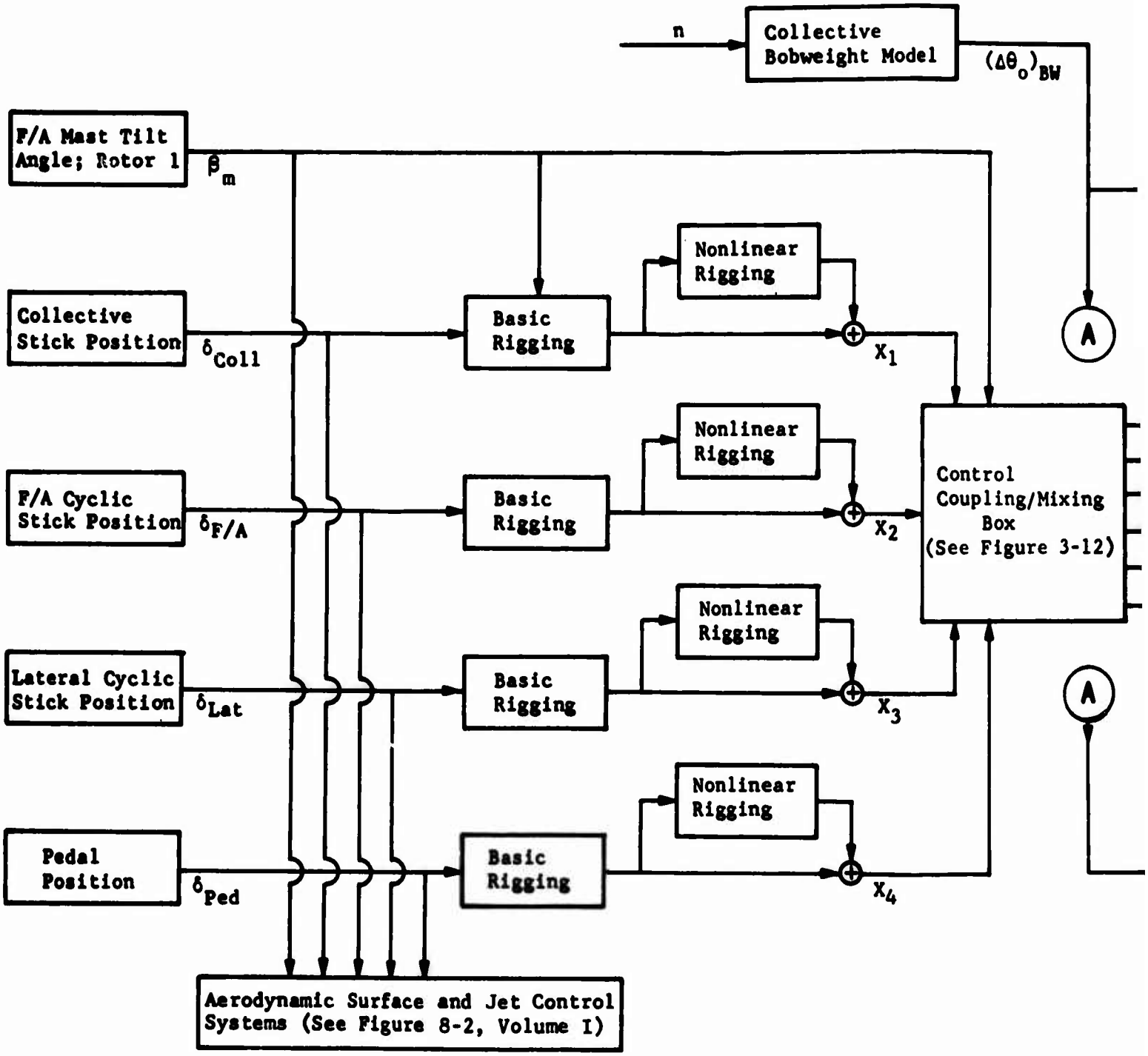

Figure 3-11. Schematic Diagram of Rotor Control System.

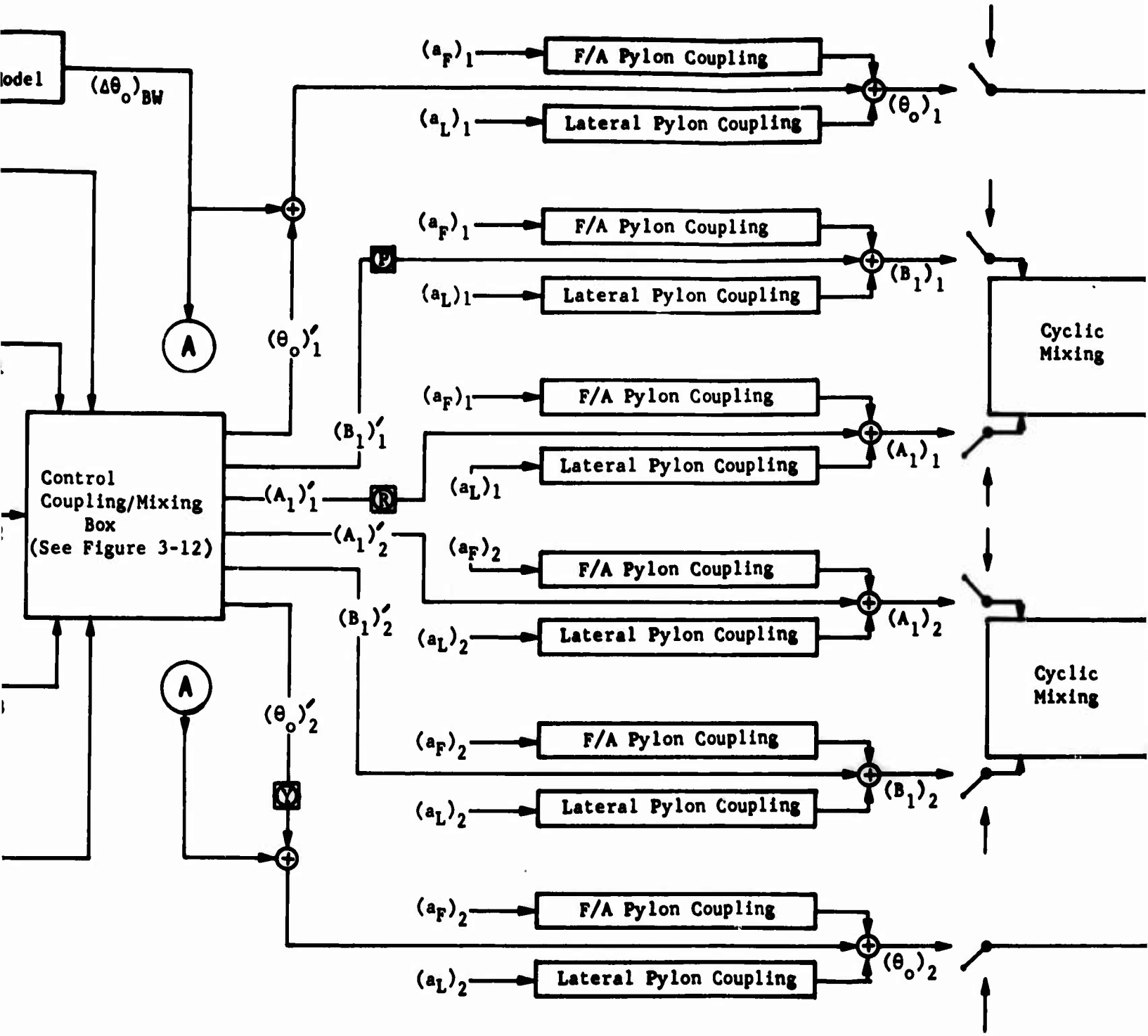
lodel
$(\Delta\theta_o)_{BW}$
A
$(\theta_o)'_1$
Control
Coupling/Mixing
Box
(See Figure 3-12)
$(B_1)'_1$
$(A_1)'_1$
$(A_1)'_2$
$(B_1)'_2$
A
$(\theta_o)'_2$
$(a_F)_1$
F/A Pylon Coupling
$(a_L)_1$
Lateral Pylon Coupling
$(\theta_o)_1$
$(a_F)_1$
F/A Pylon Coupling
$(a_L)_1$
Lateral Pylon Coupling
$(B_1)_1$
Cyclic
Mixing
$(a_F)_1$
F/A Pylon Coupling
$(a_L)_1$
Lateral Pylon Coupling
$(A_1)_1$
$(a_F)_2$
F/A Pylon Coupling
$(a_L)_2$
Lateral Pylon Coupling
$(A_1)_2$
Cyclic
Mixing
$(a_F)_2$
F/A Pylon Coupling
$(a_L)_2$
Lateral Pylon Coupling
$(B_1)_2$
$(a_F)_2$
F/A Pylon Coupling
$(a_L)_2$
Lateral Pylon Coupling
$(\theta_o)_2$

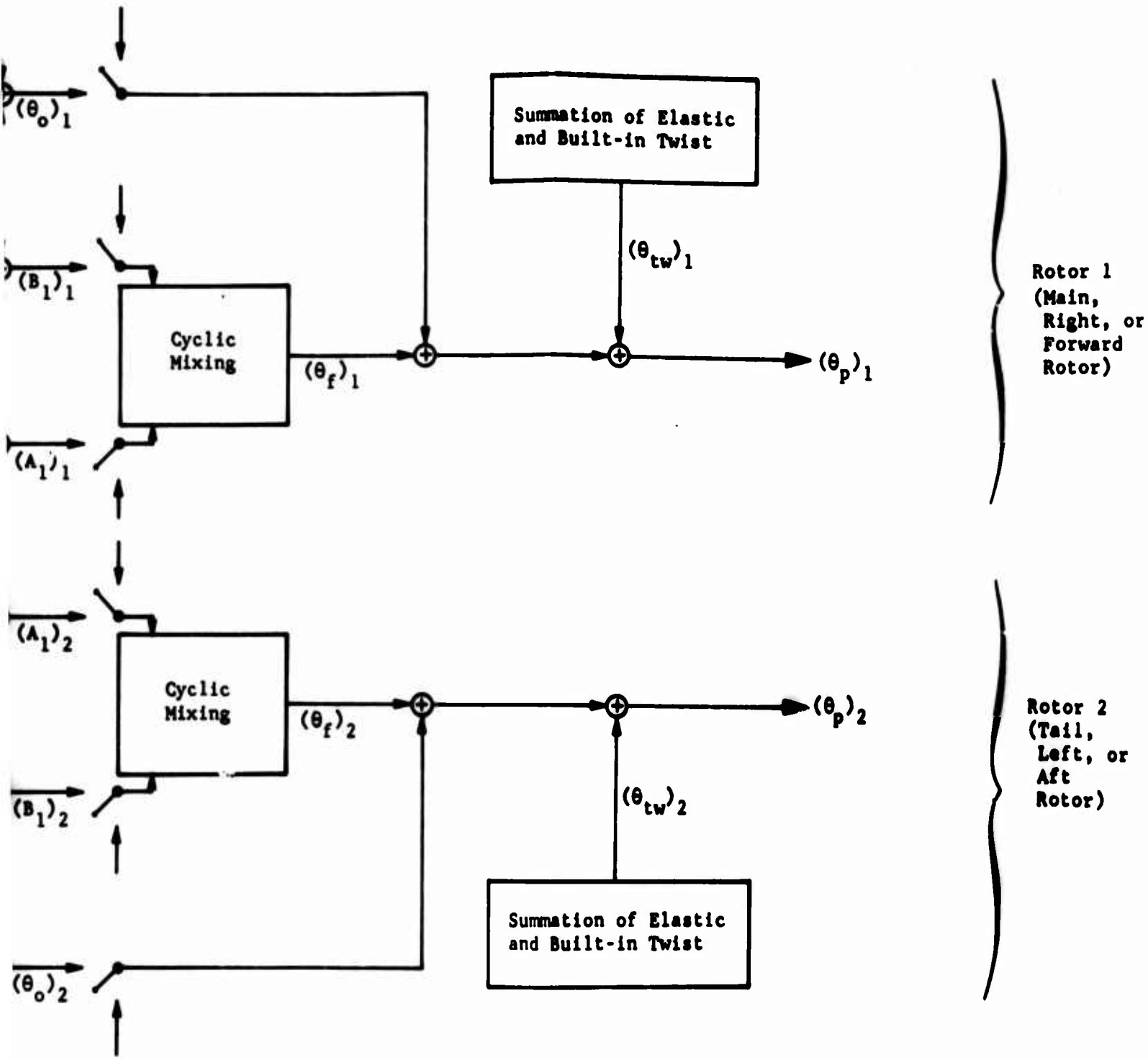
$(\theta_o)_1$
$(B_1)_1$
$(A_1)_1$
Cyclic Mixing
$(\theta_f)_1$
Summation of Elastic and Built-in Twist
$(\theta_{tw})_1$
$(\theta_p)_1$
Rotor 1 (Main, Right, or Forward Rotor)
$(A_1)_2$
$(B_1)_2$
$(\theta_o)_2$
Cyclic Mixing
$(\theta_f)_2$
$(\theta_p)_2$
$(\theta_{tw})_2$
Summation of Elastic and Built-in Twist
Rotor 2 (Tail, Left, or Aft Rotor)

Nomenclature

X_1, X_2, X_3, and X_4 are respectively the intermediate collective, F/A, lateral and pedal control angles.

Rotor 1 (Main, Right, or Forward Rotor)

$\blacksquare$ Stability and Control Augmentation System input points. P = Pitch SCAS; R = Roll SCAS; Y = Yaw SCAS.

$(\theta_p)_1$

$(a_F)_i$ and $(a_L)_i$ are the angular displacements of the F/A and lateral pylon respectively of the ith rotor (i = 1 or 2).

$(\theta_o)_i$ is the root collective pitch angle (in the rotating system) for the ith rotor.

$(B_1)_i$ and $(A_1)_i$ are respectively the F/A and lateral swashplate angles (nonrotating system) for the ith rotor.

The switches (►) near the Cyclic Mixing Block indicate the point at which control angles may be defined directly rather than by the control system.

$(\theta_p)_2$

Rotor 2 (Tail, Left, or Aft Rotor)

$(\theta_f)_i$ is the feathering angle (in the rotating system) of the blade root as a function of blade azimuth for the ith rotor.

$(\theta_{tw})_i$ is the twist angle (in the rotating system) from the blade root to the appropriate blade station and azimuth for the ith rotor.

$(\theta_p)_i = (\theta_o)_i + (\theta_f)_i + (\theta_{tw})_i$ and is the total pitch angle at the appropriate blade station azimuth for the ith rotor.

The primes (′) on the collective pitch and swashplate angles indicate the output of the Control Coupling/ Mixing Box (i.e., the angles before SCAS, bobweight, and pylon inputs are included).

3.12.2 Supplemental Rotor Controls Subgroup: XCRT(1-28), omit if IPL(13) = 0

The inputs to this subgroup are primarily intended to provide control linkages used in configurations other than single-main-rotor helicopters, e.g., tandem or side-by-side rotor helicopters and tilt rotor or composite aircraft. If the program decides that the configuration is not a single-main-rotor helicopter (KONFIG $\neq$ 1, see Section 3.26.1), an error message will be generated if XCRT inputs are not included.

The linkages defined in the Basic Controls subgroup are a subset of the complete rotor control system model shown in Figure 3-11. To use the complete model, both the Basic and Supplemental Rotor Controls subgroups must be input.

In the Basic Controls subgroup discussed in the previous section, each primary flight control is linked linearly to a single blade or swashplate angle. In the complete model described below, each control is linked to a single intermediate control angle. The linkage may be linear, parabolic, or cubic, and in the case of the collective stick the linkage can be a function of the F/A mast tilt angle of Rotor 1. Then each intermediate control angle is in turn linked to between 2 and 6 specific blade or swashplate angles. These linkages are linear but can be functions of the F/A mast tilt angle of Rotor 1.

If XCRT(15) = 0, no control linkages will change with F/A mast tilt angle. If XCRT(15) $\neq$ 0, specified linkages will change with mast tilt. The value of XCRT(15) will determine the value of certain variables used in the control system model as shown in Table 3-12.

The following physical interpretations can be applied to the variables in Table 3-12. DTMIN is the change in the minimum value of Rotor 1 collective pitch, XCON(2), with mast tilt. SBETA, CBETA, C19, and S20 are sinusoidal functions of mast tilt used to phase control linkages in or out.

The control linkages defined by XCRT(1) through XCRT(14) on CARDS 135 and 136 are in units of degrees of blade pitch or swashplate angle per degree of intermediate control angle. The controlled angle, controlling angle and most common use of each linkage are described in Table 3-13.

The program then uses the XCON inputs and XCRT(22) through (28) to compute the intermediate control angles (X_1, X_2, X_3, and X_4) as shown in Table 3-14. The first two terms in each equation correspond to the blocks labeled "BASIC RIGGING" in Figure 3-11. The third term in the equation for X_1 and the third and fourth terms in the equations for X_2, X_3, and X_4 correspond to the blocks labeled "NONLINEAR RIGGING" in Figure 3-11.

Preceding page blank

TABLE 3-12. DEFINITIONS OF CONTROL SYSTEM VARIABLES		
Variable	XCRT(15) ≠ 0	if XCRT(15) = 0
DTMIN	$XCRT(16)*\beta_M + XCRT(17)*\beta_M^2$	0.0
DTRNG	$[XCRT(18) - XCON(3)]*\beta_M/(\pi/2)$	0.0
SBETA or SB	$\sin\beta_M$	1.0
CBETA or CB	$\cos\beta_M$	1.0
C19	$\cos[XCRT(19)*\beta_M]$	1.0
S20	$\sin[XCRT(20)*\beta_M + XCRT(21)]$	1.0
β_M = F/A mast tilt of Rotor 1 degrees.		

TABLE 3-13. CONTROL COUPLING LINKAGES			
Input XCRT	Controlled Angle	Controlling Angle (Intermediate Control Angle)	Primary Use
(1)	Rotor 2 Collective	X_1	T, C
(2)	Rotor 1 Collective	X_2	T
(3)	Rotor 2 Collective	X_2	T
(4)	Rotor 2 F/A Cyclic	X_2	T, C
(5)	Rotor 1 Collective	X_3	C
(6)	Rotor 2 Collective	X_3	C
(7)	Rotor 1 F/A Cyclic	X_3	C
(8)	Rotor 2 F/A Cyclic	X_3	C
(9)	Rotor 2 Lateral Cyclic	X_3	T, C
(10)	Rotor 1 Collective	X_4	C
(11)	Rotor 1 F/A Cyclic	X_4	C
(12)	Rotor 2 F/A Cyclic	X_4	C
(13)	Rotor 1 Lateral Cyclic	X_4	T
(14)	Rotor 2 Lateral Cyclic	X_4	T
C = composite (tilt-rotor) or co-axial configuration T = tandem helicopter configuration			

TABLE 3-14. INTERMEDIATE CONTROL ANGLES
Collective
$X_1 = [XCON(2) + DTMIN] + [XCON(3) + DTRNG]*\delta_{COLL}/100 + XCRT(22)*K_1^2$
F/A Cyclic
$X_2 = XCON(9) + XCON(10)*\delta_{F/A}/100 + XCRT(23)*K_2^2 + XCRT(24)*K_2^3$
Lateral Cyclic
$X_3 = XCON(16) + XCON(17)*\delta_{LAT}/100 + XCRT(25)*K_3^2 + XCRT(26)*K_3^3$
Pedal
$X_4 = XCON(23) + XCON(24)*\delta_{PED}/100 + XCRT(27)*K_4^2 + XCRT(28)*K_4^3$
$K_1 = (\delta_{COLL} - 50)*XCON(1)/100$ $K_2 = (\delta_{F/A} - 50)*XCON(8)/100$ $K_3 = (\delta_{LAT} - 50)*XCON(15)/100$ $K_4 = (\delta_{PED} - 50)*XCON(22)/100$ Control deflections in inches from the 50% position

The collective pitch and swashplate angles for each rotor are computed from the equations shown in Table 3-15. These equations use the information from Tables 3-11, 3-12, and 3-14 and inputs from bobweight, pylon, and SCAS. The increments to the angles due to bobweight, pylon, and SCAS are represented by $(\Delta\theta_0)_1$, $(\Delta\theta_0)_2$, $(\Delta B_1)_1$, etc., in Table 3-15. Excluding these increments and the control locks, Table 3-15 corresponds to the block labeled "CONTROL COUPLING/MIXING BOX" shown in Figure 3-11 and detailed in Figure 3-12.

If certain XCON inputs and one of the XCRT inputs are input as zero, they are reset by the program during initialization. See Table 3-16 for a list of these inputs and their reset values.

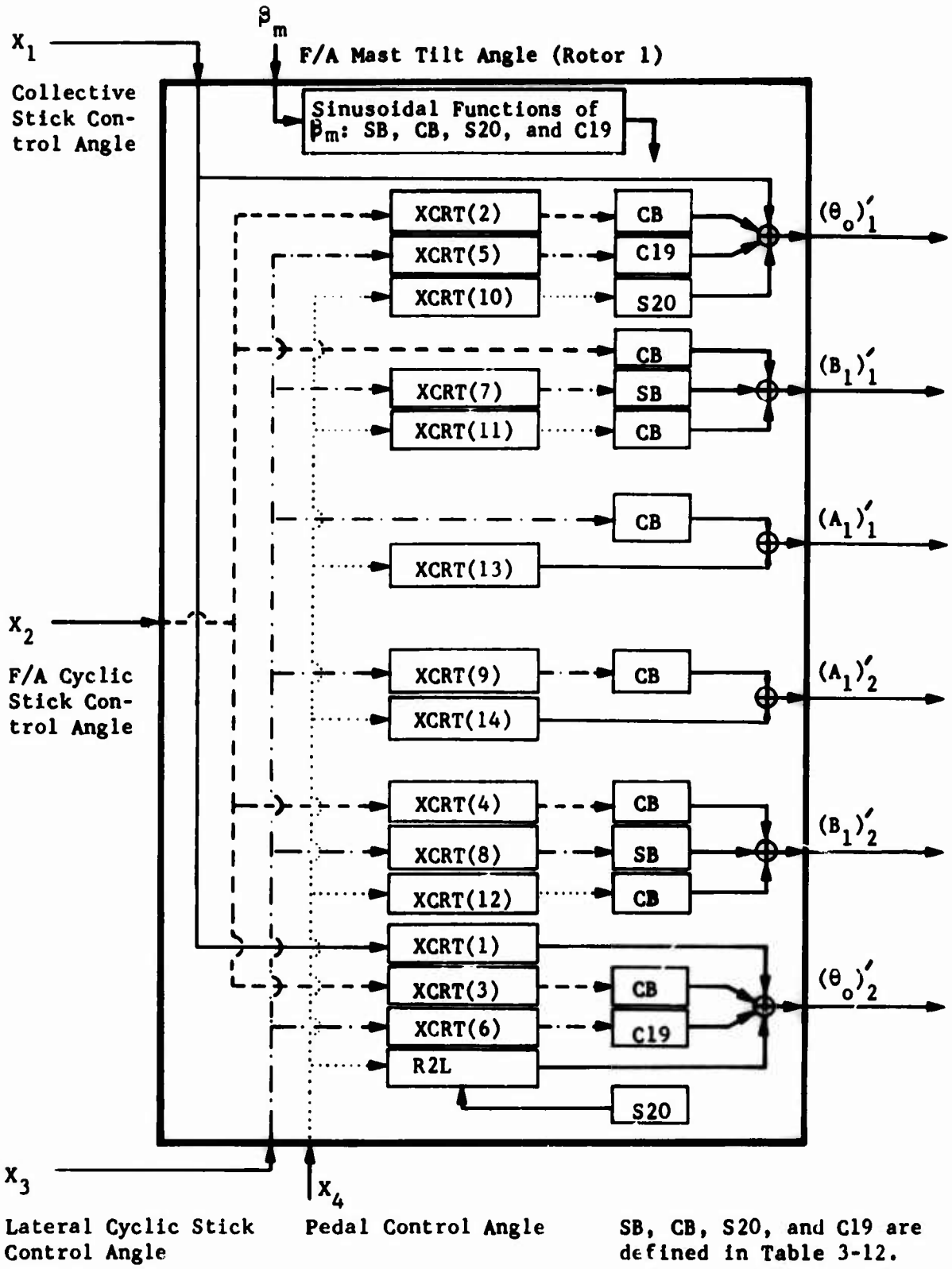

Figure 3-12. Schematic Diagram of Control Coupling/Mixing Box.

TABLE 3-15. COMPLETE MODEL FOR COLLECTIVE AND SWASHPLATE ANGLES

Collective Pitch

$$(\theta_o)_1 = \begin{cases} X_1 + X_2*XCRT(2)*CBETA + X_3*XCRT(5)*C19 + X_4*XCRT(10)*S20 + (\Delta\theta_o)_1 & \text{if } XCON(4) = 0 \\ XCON(5) & \text{if } XCON(4) \neq 0 \end{cases}$$

$$(\theta_o)_2 = \begin{cases} X_1*XCRT(1) + X_2*XCRT(3)*CBETA + X_3*XCRT(6)*C19 + X_4*R2L + (\Delta\theta_o)_2 & \text{if } XCON(25) = 0 \\ XCON(26) & \text{if } XCON(25) \neq 0 \end{cases}$$

F/A Cyclic Pitch

$$(B_1)_1 = \begin{cases} X_2*CBETA + X_3*XCRT(7)*SBETA + X_4*XCRT(11)*CBETA + (\Delta B_1)_1 & \text{if } XCON(11) = 0 \\ XCON(12) & \text{if } XCON(11) \neq 0 \end{cases}$$

$$(B_1)_2 = \begin{cases} X_2*XCRT(4)*CBETA + X_3*XCRT(8)*SBETA + X_4*XCRT(12)*CBETA + (\Delta B_1)_1 & \text{if } XCON(11) = 0 \\ XCON(12)*TRIND & \text{if } XCON(11) \neq 0 \end{cases}$$

Lateral Cyclic Pitch

$$(A_1)_1 = \begin{cases} X_3*CBETA + X_4*XCRT(13) + (\Delta A_1)_2 & \text{if } XCON(18) = 0 \\ XCON(19) & \text{if } XCON(18) \neq 0 \end{cases}$$

$$(A_1)_2 = \begin{cases} X_3*XCRT(9)*CBETA + X_4*XCRT(14) + (\Delta A_1)_2 & \text{if } XCON(18) = 0 \\ -XCON(19)*TRIND & \text{if } XCON(18) \neq 0 \end{cases}$$

Increments Due to Pylon, SCAS, and Bobweight

$$(\Delta\theta_o)_1 = XMP(7)*a_{F1} + XMP(14)*a_{L1} + (\Delta\theta_o)_{BW}$$

$$(\Delta\theta_o)_2 = XTP(7)*a_{F2} + XTP(14)*a_{L2} + TRIND*(\Delta\theta_o)_{BW} + (\Delta\theta_o)_{SCAS}$$

$$(\Delta B_1)_1 = XMP(5)*a_{F1} + XMP(12)*a_{L1} + (\Delta B_1)_{SCAS}$$

$$(\Delta B_1)_2 = XTP(5)*a_{F2} + XTP(12)*a_{L2}$$

TABLE 3-15 - Continued

Increments Due to Pylon, SCAS, and Bobweight (Cont'd)

$(\Delta A_1)_1 = XMP(6)*a_{F1} + XMP(13)*a_{L1} + (\Delta A_1)_{SCAS}$

$(\Delta A_1)_2 = XTP(6)*a_{F2} + XTP(13)*a_{L2}$

X_1, X_2, X_3, and X_4 are the intermediate control angles defined in Table 3-14.

B_1 is F/A swashplate tilt angle.

A_1 is lateral swashplate tilt angle.

$(\ldots)_1$ indicates main rotor, i.e., Rotor 1.

$(\ldots)_2$ indicates tail rotor, i.e., Rotor 2.

XMP and XTP are the pylon inputs on CARDS 48, 49, 58, and 59.

a_{Fi} and a_{Li} are the F/A and lateral displacements of the pylon for the ith rotor.

$$TRIND = \begin{cases} 0.0 \text{ if } |XTR(45)| \geq 45^\circ \\ 1.0 \text{ if } |XTR(45)| < 45^\circ \end{cases} \qquad R2L = \begin{cases} 1.0 & \text{if KONFIG} = 1 \\ 0.0 & \text{if KONFIG} = 2 \\ -XCRT(1)*S20 & \text{if KONFIG} = 3 \end{cases}$$

See Section 3.26.1 for discussion of KONFIG.

TABLE 3-16. RESET VALUES FOR CONTROL INPUTS

Input	Reset Value	Input Description	Units
XCON(1)	100.	Collective stick range	(inches)
XCON(3)	100.	Rotor 1 collective range	(degrees)
XCON(8)	100.	F/A cyclic stick range	(inches)
XCON(9)	-50.	Rotor 1 minimum F/A cyclic	(degrees)
XCON(10)	100.	Rotor 1 F/A cyclic range	(degrees)
XCON(15)	100.	Lateral cyclic stick range	(inches)
XCON(16)	-50.	Rotor 1 minimum lateral cyclic	(degrees)
XCON(17)	100.	Rotor 1 lateral cyclic range	(degrees)
XCON(22)	100.	Pedal position range	(inches)
XCON(23)	-50.	Rotor 2 minimum collective pitch	(degrees)
XCON(24)	100.	Rotor 2 collective pitch range	(degrees)
XCRT(18)	100.	Rotor 1 collective pitch range at β_M=90	(degrees)

All other XCON and XCRT parameters are used as input.

3.13 ITERATION LOGIC GROUP

CARD 141

The program is permitted up to XIT(1) iterations to converge to a trimmed flight condition. If the force and moment summations are not less than the allowable errors, XIT(15) through XIT(21), execution terminates.

If the time-variant trim option is activated (IPL(21) $\neq$ 0), the increment between the rotor azimuth angles used in the analysis may be input in XIT(2). If the input is 0.0, XIT(2) is reset to 15.0 degrees. If the input is not zero, the program examines the natural frequencies of the modes of both rotors. It then checks that the value of XIT(2) will provide at least 10 points for each cycle of the highest frequency present and, if necessary, resets XIT(2) to satisfy this condition. The value of XIT(2) is then checked to see if it is less than 0.5 degree or greater than 30.0 degrees. If it is, XIT(2) is then reset to the nearer value. If either of the unsteady aerodynamic options is activated (IPL(20) $\neq$ 0), XIT(2) should be less than about 10 degrees for the numerical differentiation to work properly. See Section 3.20 for additional discussion of azimuth increments.

XIT(3) is the induced velocity change limiter. It is equal to half the maximum amount the induced velocity is allowed to change within iterations in TRIM and between time points in maneuver. Three thrust-induced velocity iterations are made within each trim iteration in the TRIM portion of the program. The sign of XIT(3) controls the application of the limiter in these thrust-induced velocity iterations, and the absolute value of XIT(3) is the maximum change allowed. If XIT(3) > 0.0, the limiter is active only during the first and third passes through this loop. If XIT(3) < 0.0, the limiter is active during all three passes. If XIT(3) = 0.0, it is reset to 0.5 ft/sec. Note that the input sign of XIT(3) controls only the manner in which the limit is applied. The sign of the limit applied within the program is determined by the program. This option allows the user to better regulate the numerical bounce problem sometimes encountered when performing a TRIM.

XIT(4) is a nondimensional factor used to compute the increments to the linear and angular velocities to be used in the STAB subroutine. The angular rate increments are 0.10 radian per second times the input, and the linear rate increments are 10 feet per second times the input.

CARD 142

The partial derivative increment for TRIM is computed from the correction limit. XIT(8) through (11) define variable dampers for balancing the rotor flapping moments in the rotor analysis. The starting value for the correction limit is computed from the minimum value input.

XIT(12), (13), and (14) are the inputs for a variable damping procedure in TRIM. At each iteration, a delta is computed for each of the 10 trim

variables. These deltas are then compared to a correction limit. If any of the deltas are larger than the limit, they are ratioed down such that the largest one is equal to the limit. The starting value of the limit is input as XIT(12). If at the start of any iteration the force and moment errors are all less in absolute value than XIT(14), then the limit is halved with the restriction that the limit is never less than XIT(13). If XIT(12) < 0.5 degrees or > 10 degrees, the program resets it to .05 degree. If XIT(14) < 40*XIT(15), the program resets it to 40*XIT(15).

CARD 143

XIT(15) through XIT(21), the allowable errors, are the maximum magnitudes of the force and moment imbalances permitted for a trimmed flight condition. That is, the trim iteration procedure continues until XIT(1) iterations are exceeded, or the absolute values of force and moment imbalances are less than the corresponding allowable errors. The smaller the allowable errors, the larger the number of iterations required for trim.

A good method for determining the values to be input to XIT(15) through XIT(21) is as follows. Define the maximum levels of

1) the three linear accelerations at the cg (a_x, a_y, a_z),
2) the three angular accelerations about the cg (p, q, r), and
3) the flapping acceleration of each ($\ddot{\beta}_{M/R}$, $\ddot{\beta}_{T/R}$)

at which the particular flight condition can be considered to be trimmed.

With these maximum desirable accelerations in units of ft/sec^2 and deg/sec^2, reasonable values for the allowable errors are then

XIT(15) $\leq$ (a_x)*XFS(1)/32.17

XIT(16) $\leq$ (a_y)*XFS(1)/32.17

XIT(17) $\leq$ (a_z)*XFS(1)/32.17

XIT(18) $\leq$ (a)*XFS(9)/57.3 and $\leq$ (r)*XFS(10)/57.3

XIT(19) $\leq$ (p)*XFS(8)/57.3

XIT(20) $\leq$ ($\ddot{\beta}_{M/R}$)*(total M/R flapping inertia)/57.3

XIT(21) $\leq$ ($\ddot{\beta}_{T/R}$)*(total T/R flapping inertia)/57.3

For wind tunnel simulations (IPL(1), IPL(23), or IPL(24) $\neq$ 0), the first five allowable error inputs should be very large, e.g., 100,000 or more, while the last two should be realistic error limits. This action prevents the program from continuing to iterate to forces and moments about the cg which are less than the allowable errors when the only requirement is that the rotor flapping moment imbalance be within the specified error limits.

3.14 FLIGHT CONSTANTS GROUP

CARD 151

The input velocities are with respect to the ground. The forward velocity is not necessarily the total velocity.

Altitude is the height above ground. It is used in the calculations for ground effect. If altitude is negative, the program stops. This input has no relationship to the pressure altitude, XFS(27); see CARD 154.

The Euler angles are the angles from the ground coordinate system to the body coordinate system. Yaw is positive nose right; pitch is positive nose up; roll is positive down right.

CARD 152

The collective and cyclic stick and pedal positions are the initial settings on which the program begins its TRIM iterations.

The g level, XFC(12), is the acceleration in g's along the body Z-axis. (See TRIM type indicator, IPL(15) on CARD 07).

CARD 153

The flapping angles and rotor thrust inputs are used as initial values in TRIM iteration procedure.

CARD 154

If the sum of main rotor and tail rotor power required exceeds 0.9 times the maximum engine horsepower available, XFC(24), when the TRIM page is printed, a message will be printed to that effect, and execution will terminate. It is suggested that during preliminary design analysis with the program this input equal approximately 1.25 to 1.5 times the transmission power limit to avoid being terminated at high power conditions when the data may definitely be valid and of interest. The program does not establish a sink rate once XFC(24) horsepower is attained.

XFC(26), the atmospheric logic switch, is used in conjunction with the pressure altitude, XFC(27), and ambient temperature, XFC(28), to compute the density ratio, σ'; density altitude, h_D; and speed of sound, V_s. If XFC(26) = 0, standard day conditions are assumed, XFC(28) is ignored, and the parameters are calculated from the following equations:

$$\theta_S = 1 - (.687535 \times 10^{-5})\ XFC(27)$$

$$T_A = 288.16\ \theta_S - 273.16$$

$$\sigma' = (\theta_S)^{4.2561}$$

$$V_s = 65.811366 \sqrt{T_A + 273.16}$$

$$h_D = XFC(27)$$

If XFC(26) $\neq$ 0, non-standard-day conditions are assumed. If XFC(26) > 0, the ambient temperature is defined to be in degrees Fahrenheit and

$$T_A = 5[XFC(28) - 32]/9$$

If XFC(26) < 0, then XFC(28) is defined to be in degrees Centigrade and

$$T_A = XFC(28)$$

then

$$\delta = (\theta_S)^{5.2561}$$

$$\theta = (T_A + 273.16)/288.16$$

$$\sigma' = \delta/\theta$$

$$V_s = 65.811366 \sqrt{T_A + 273.16}$$

$$h_D = (1 - (\sigma')^{0.23496})/(.687535 \times 10^{-5})$$

If the speed of sound and density ratio are the known quantities rather than pressure altitude and temperature, set XFC(26) to a negative number and compute XFC(27) and (28) from the following equations:

$$XFC(27) = 145447.14\left[1 - (\sigma' [V_s/65.811366]^2/288.16)^{0.190255}\right]$$

$$XFC(28) = [V_s/65.811366]^2 - 273.16$$

NOTE: For TRIM or TRIM-STAB input decks (NPART = 1 or 7), CARD 154 must be the last card of the data set. A card with NPART = 10 is the only card which may follow CARD 154 of a TRIM or TRIM-STAB data set.

3.15 <u>BOBWEIGHT GROUP</u> (include only if NPART = 2 or 4 and IPL(14) $\neq$ 0)

CARD 201

For no bobweight, set XBW(1) = 0.

If XBW(1) $\neq$ 0, the following bobweight model is used.

The bobweight system acts to reduce collective pitch with increasing load factor during maneuvers. The system is assumed to be mounted so that the weight is free to translate only parallel to the body vertical, or Z, axis. The equation of motion for the weight in the system is

$$\frac{1}{12} m\ddot{\delta} + C\dot{\delta} + K\delta = F_{BW}$$

where

δ = the linear displacement of the bobweight from its position at 1.0 g, positive down (in.)

$\dot{\delta}$ = linear velocity (in./sec)

$\ddot{\delta}$ = linear acceleration (in./sec^2)

F_{BW} = bobweight forcing function described below (lb)

K = XBW(2), the spring constant (lb/in.)

C = XBW(3), the damping coefficient (lb-sec/in.)

W = XBW(4), the weight of the bobweight (lb)

m = W/32.17, the mass of the bobweight (slugs)

Other symbols used are

n_p = XBW(7), the system preload (g)

n = load factor (g)

$\Delta\theta_o$ = increment to collective pitch due to bobweight displacement (deg)

η = XBW(1), linkage of δ to $\Delta\theta_o$ (deg/in.)

The forcing function is defined as a function of W, n, and n_p at each time point during the maneuver. At time t = 0,

$$\ddot{\delta} = \dot{\delta} = \delta = 0.0$$

and

$$F_{BW} = \text{Max}\,[0,\ W(n-n_p)]$$

<u>NOTE</u>: The bobweight is not active during the trim procedure. Hence, if a maneuver is started from a trim where n is greater than n_p, collective stick position (and possibly other control positions if control coupling is present) will not be correct. Since maneuvers are normally started from 1.0 g flight and the preload is greater than 1.0, this should not create a problem.

At the first time point where n exceeds n_p, whether at or following the start of the maneuver, the forcing function is defined there and at subsequent time points as

$$F_{BW} = W(n-n_p)$$

That is, once n exceeds n_p, the forcing function can be negative if n later drops below n_p. This definition of F_{BW} applies as long as

$$\delta > 0.0 \quad \text{or} \quad \ddot{\delta} \geq 0.0$$

at each subsequent time point.

If at any time point the computations yield $\delta \leq 0.0$ and $\ddot{\delta} < 0.0$, the bobweight parameters for the next time point are reinitialized to

$$\ddot{\delta} = \dot{\delta} = \delta = 0$$

and

$$F_{BW} = \text{Max}\,[0,\ W(n-n_p)]$$

i.e., the same values as at t = 0. Subsequent computations proceed as from t = 0.

The increment added to collective pitch is then

$$\Delta\,\theta_o = -\eta\,\delta$$

i.e., positive bobweight displacement and positive linkage reduces collective pitch. This increment is always added to the main rotor collective. If the tail rotor (Rotor 2) lateral mast tilt angle, XTR(45), is less than 45 degrees, the increment is also added to the Rotor 2 collective pitch.

3.16 <u>WEAPONS GROUP</u> (include only if NPART = 2 or 4 and IPL(14) $\neq$ 0)

CARD 211

Stationline, buttline and waterline are used to locate the point of application of the recoil force of the weapon.

Azimuth and elevation define the orientation of the weapon with respect to the fuselage. Positive azimuth is to the right; positive elevation is up. With both angles zero, the weapon is alined parallel to the body X-axis and is defined to be firing positive X-directional (forward).

The recoil force is prescribed on a 311-type card. See Section 3.21.2.10, J = 16. For a weapon firing in the direction prescribed by the orientation angles, the sign of the recoil force should normally be negative (i.e., opposite to the direction of firing).

3.17 <u>SCAS GROUP</u> (include only if NPART = 2 or 4 and IPL(14) $\neq$ 0)

The Stability and Control Augmentation System (SCAS) is programmed to simulate an actual hardware system which provides improved stability and response to pilot inputs. The system block diagram is shown below:

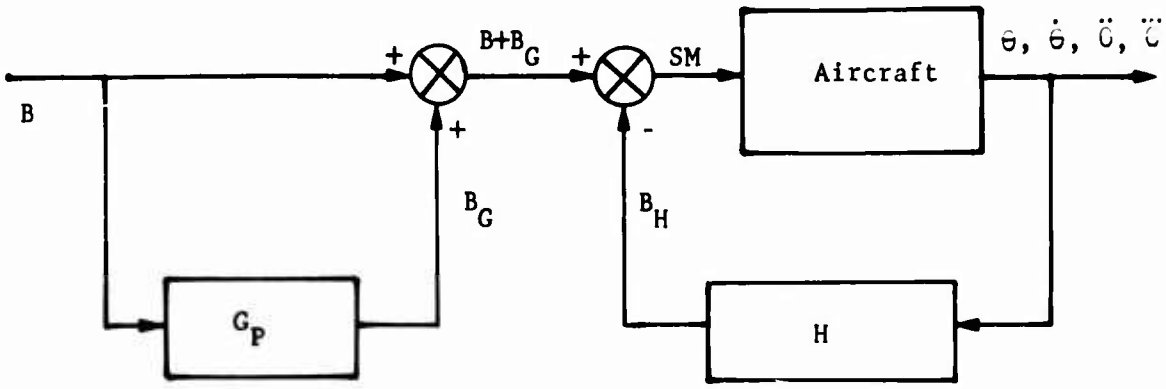

where

B = control input (equal to appropriate output of Control Coupling/ Mixing Box; see Figures 3-11 and 3-12)

B_G = SCAS feedforward added to pilot input to offset feedback

B_H = SCAS feedback dependent on ship response

SM = $B + B_G - B_H$ = Total control input

G_P = feedforward transfer function

H = feedback transfer function

θ = ship response variable (roll, pitch, or yaw); dots indicate time derivatives

The feedback transfer function has the following form:

$$H = \frac{B_H}{\theta} = \frac{K_H s(\tau_1 s + 1)(\tau_2 s + 1)}{(\tau_3 s + 1)(\tau_4 s + 1)(\tau_5 s + 1)}$$

where

s = LaPlace Transform Operator $\frac{d}{dt}$ and the other variables are defined in terms of the inputs in Section 2.17.

The feedforward transfer function has the following form:

$$G_P = \frac{B_G}{B} = \frac{K_G s}{(\tau_3 s+1)(\tau_4 s+1)(\tau_5 s+1)}$$

In the program, these equations are written and solved in the form of differential equations:

$$C_1\dddot{B}_H + C_2\ddot{B}_H + C_3\dot{B}_H + B_H = C_4\dddot{\theta} + C_5\ddot{\theta} + K_H\dot{\theta}$$

$$C_1\dddot{B}_G + C_2\ddot{B}_G + C_3\dot{B}_G + B_G = K_G\dot{B}$$

where

$$C_1 = \tau_3\tau_4\tau_5$$

$$C_2 = \tau_3\tau_4 + \tau_4\tau_5 + \tau_3\tau_5$$

$$C_3 = \tau_3 + \tau_4 + \tau_5$$

$$C_4 = \tau_1\tau_2 K_H$$

$$C_5 = (\tau_1 + \tau_2)\, K_H$$

The variables used in the general equations above are defined in terms of the input variables for the three SCAS channels in the table below.

General Equation	Roll Channel	Pitch Channel	Yaw Channel
K_H	XSCAS(1)	XSCAS(8)	XSCAS(15)
K_G	XSCAS(7)	XSCAS(14)	XSCAS(21)
τ_1	XSCAS(2)	XSCAS(9)	XSCAS(16)
τ_2	XSCAS(3)	XSCAS(10)	XSCAS(17)
τ_3	XSCAS(4)	XSCAS(11)	XSCAS(18)
τ_4	XSCAS(5)	XSCAS(12)	XSCAS(19)
τ_5	XSCAS(6)	XSCAS(13)	XSCAS(20)
θ	roll angle	pitch angle	yaw angle

CARD 224

The SCAS has three independent channels for roll, pitch, and yaw. See Section 3.21, Variations from Trimmed Flight, J = 24, 25, and 26 for procedure to activate the system.

The maximum change which the roll channel of the SCAS may make is ± XSCAS (22) percent of the full range of the lateral cyclic. The maximum authorities in pitch and yaw are similarly defined.

The dead bands on the moment derivatives are used to nega the numerical noise which may be generated in the numerical differentiation process necessary to obtain these quantities. A value of 100 has been satisfactory for those cases run to date.

3.18 STABILITY ANALYSIS TIMES GROUP (include only if NPART 2 or 4 and IPL(14) ≠ 0, or if NPART = 5)

The inputs to this group (the TSTAB array) specify the points during a maneuver where a stability analysis is to be performed. This stability analysis is the same as that performed after TRIM when NPART = 7 or when NPART = 10 and NVARC = 1.

The sign of each TSTAB input determines the units assigned to it. If the input is positive, its value is assumed to be time in seconds. If the input is negative, its absolute value is assumed to be the total azimuth angle of Blade 1 of the main rotor in degrees. This total azimuth angle is defined as zero degrees (blade parallel to the tail boom, pointing aft) at maneuver time zero, and increases by 360 degrees for each complete rotor revolution. It is not necessary that the inputs be all positive (seconds) or all negative (degrees). However, it is mandatory that each TSTAB input specify a point in the maneuver which occurs after the point specified by the preceding TSTAB input. Hence, to avoid input errors, it is suggested that all inputs be in consistent units, particularly if the maneuver involves a change in rotor rpm.

It is emphasized that total azimuth angles are referenced to time zero. Hence, angles in the second rotor revolution are between 360 and 720 (inputs of -360.0 to -720.0); an input of -90.0 will only generate a stability analysis luring the first rotor revolution.

> NOTE: If the time-variant rotor analysis is activated (IPL(21) ≠ 0), stability analyses cannot be performed, and TSTAB(1) must consequently specify a time or azimuth angle which occurs after the end of the maneuver. A value of 9999. (seconds) for TSTAB(1) is suggested in this case.

3.19 BLADE ELEMENT DATA PRINTOUT GROUP (include only if NPART = 2 or 4 and IPL(14) $\neq$ 0 or if NPART = 5)

CARDS 241 and 242

The inputs to this group (the TAIR array) specify the points during the maneuver where blade element data are to be printed. TAIR inputs are interpreted in the same manner as TSTAB inputs (i.e., positive inputs are taken as seconds from the start of the maneuver and negative inputs as degrees of total azimuth angle for Blade 1 of the main rotor). See Section 3.18 for a more complete discussion. The output obtained at the specified points may be dynamic loads only, aerodynamic loads only, or both a. discussed below.

If IPL(27) = 0 or 1, the beamwise bending moment, chordwise bending moment, and torsional moment are printed for each of the 20 radial stations on each blade of the rotor(s). These moments have been resolved through the blade pitch angle so they really are beamwise and chordwise.

If IPL(27) = 2, detailed aerodynamic data are printed for each radial station on each blade of the rotor(s) in addition to the bending moments.

The value of NVARC on CARD 01 specifies the rotor(s) to be included in the printout for both dynamic and aerodynamic loads.

Note that bending moment data will be printed only when the specified rotor uses the time-variant analysis. If printout of moment data is specified for a rotor which uses the quasi-static analysis, the program ignores the inputs and does not print the data. However, blade element aerodynamic data will be printed at the specified times regardless of the type of rotor analysis which is active.

3.20 <u>MANEUVER TIME CARD</u> (include only if NPART = 2, 4, or 5)

CARD 301

This card and subsequent cards are to be put into the data deck only when running a maneuver; i.e., NPART = 2, 4, or 5 on CARD 01.

For NPART = 2 or 4, the start time, TCI(1), is assumed to be zero, and any other input is ignored. For NPART = 5, the start time is the time at which the maneuver is restarted; it must be greater than zero and less than the last time point of the maneuver being restarted. See discussion of CARD 01 for further details.

TCI(2) is used to specify the first base value of the time increment (Δt) between calculation of maneuver time points. The Δt computed from TCI(2) will be used during the interval of TCI(1) to TCI(3) seconds of maneuver time. If TCI(2) $<$ 1.0, the input is taken to be Δt in seconds. If TCI(2) $\geq$ 1.0, the input is taken to be the increment in Rotor 1 azimuth location in degrees between time points; in this case, the time increment to be used is defined as

$$\Delta t = TCI(2)/(6\Omega_1)$$

where Ω_1 is the rotational speed of Rotor 1 in units of rpm and Δt is in seconds.

To insure stability of the numerical integration technique during a time-variant maneuver (IPL(21) $\neq$ 0), the azimuth increment should always be less than or equal to 15 degrees. If aeroelastic blades are included in the simulation, an additional constraint is that at least 10 time points should be computed for each cycle of the highest natural frequency in the rotor mode shape data. For example, if the highest natural frequency is 3.0/rev, one cycle occurs every 120 degrees and the azimuth increment should then be less than or equal to 12 degrees. These requirements on azimuth increment apply to time-variant trims as well as time-variant maneuvers. If either unsteady aerodynamic option is activated (IPL(20) $\neq$ 0), the azimuth increment for maneuver should not be greater than about 15 degrees; 10 degrees or less is preferable.

It may be desirable to change the value of Δt because of a change in rotor speed. For this case, TCI(4) can be used to specify the value of Δt to be used between TCI(3) and TCI(5) seconds of maneuver time. Like TCI(2), TCI(4) may be either a time or azimuth increment. It is not necessary that TCI(2) and TCI(4) be the same type of increment, e.g., one may be time and the other azimuth.

If TCI(6), the time to stop the maneuver, is greater than TCI(5), the program returns to using the Δt based on TCI(2) between TCI(5) and TCI(6) seconds of maneuver time. If TCI(5) is the time to stop the maneuver, as

well as the time to stop using the Δt based on TCI(4), the TCI(6) input may be zero or blank. Similarly, if a second time increment is not desired, TCI(4), TCI(5), and TCI(6) may be zero or blank. TCI(3) is then taken as the time to stop the maneuver.

When the time increment is changed during a maneuver, it may be desirable to change the frequency of printout of the time points, i.e., change the value of NPRINT input on CARD 01. This may be done with a J = 31 card. See Section 3.21.2.22.

3.21 VARIATIONS FROM TRIMMED FLIGHT (May be included only if NPART = 2, 4, or 5)

CARD 311

NEXTJ = 0 This is the last card of the 311 type.

NEXTJ $\neq$ 0 Another card of the 311 type follows.

J Type of variation, explained in list below.

If NPART = 2, 4, or 5, one card of the 311 type must be included and up to 20 may be included. All have the same format (I1, I4, 5X, 6F10.0). It is not necessary to have the J values in numerical order; in fact, there may be several cards with the same value of J. It is necessary that NEXTJ $\neq$ 0 on all of these cards except the last one which must have NEXTJ = 0.

3.21.1 Summary of Permissible J Values

Permissible values of J are from 1 to 36. The type of variation which occurs for each value of J is given in the following list.

J = 1 is for movement of collective stick
J = 2 is for movement of F/A cyclic stick
J = 3 is for movement of lateral cyclic stick
J = 4 is for movement of pedal
J = 5 is not currently used
J = 6 is for folding rotors aft after tilting forward and stopping
J = 7 is for a change in rpm governor setting
J = 8 is for converting the tail rotor into a pusher prop., i.e., changing the tail rotor mast tilt angle in the horizontal plane
J = 9 is for a vertical ramp gust; ramp length may be zero
J = 10 is for a vertical sine-squared gust
J = 11 is for a horizontal ramp gust; ramp length may be zero
J = 12 is for a horizontal sine-squared gust
J = 13 is for a change in engine torque supplied
J = 14 is for a change in auxiliary thrust supplied
J = 15 is for activation of a "yaw pilot"
J = 16 is for weapon fire
J = 17 is for change of F/A mast tilt angle and rpm on both rotors
J = 18 is for rotor brake
J = 19 is for pitch Automatic Stabilization Equipment
J = 20 is for sinusoidal movement of controls or mast
J = 21 is for a flat tracker for the main rotor
J = 22 is for a flat tracker for the tail rotor
J = 23 is for rpm dependent hub springs
J = 24 SCAS roll channel
J = 25 SCAS pitch channel
J = 26 SCAS yaw channel
J = 27 is for folding rotors horizontally after stop

J = 28 is for rpm dependent flapping stops
J = 29 is for connecting and disconnecting helicopter controls
J = 30 is for rotor moment balancing mechanism
J = 31 is for changing NPRINT on CARD 01
J = 32 is for simplified Automatic Pilot simulation
J = 33 is for the G-Tracker option with the Automatic Pilot simulation
J = 34 is for deployment of aerodynamic brake
J = 35 is for dropping external store
J = 36 is for changing incidence or control surface deflection angles of aerodynamic surfaces

3.21.2 Inputs for J-Cards

The input format for each of the currently available J-Cards is given below. Start and stop times refer to the time from the start of maneuver unless otherwise noted.

3.21.2.1 J = 1, 2, 3, 4 (Control Movements)

Col.	11-20	Start time for input rate 1	(sec)
	21-30	Input rate 1	(in./sec)
	31-40	Stop time for input rate 1	(sec)
	41-50	Start time for input rate 2	(sec)
	51-60	Input rate 2	(in./sec)
	61-70	Stop time for input rate 2	(sec)

If the computed control position is greater than 100% or less than 0%, it is reset to 100 or 0% respectively. Hence, if a control is put on a stop by rate and time inputs which would normally put the control past its stop, subsequent rate and time inputs should be with respect to the stop, not the imaginary position beyond the stop.

3.21.2.2 J = 6 (Folding Rotors Aft)

Col.	11-20	Start time (after Ω=0)	(sec)
	21-30	Rate (positive to fold aft)	(deg/sec)
	31-40	Stop time (after Ω=0)	(sec)
	41-50	Start time (after Ω=0)	(sec)
	51-60	Rate (positive to fold aft)	(deg/sec)
	61-70	Stop time (after Ω=0)	(sec)

3.21.2.3 J = 7 (Governor RPM Setting)

Same format as for J = 1, <u>except</u> rates are in rpm/sec.

3.21.2.4 J = 8 (Tail Rotor to Pusher Prop)

Same format as for J = 1, <u>except</u> rates are in deg/sec.

3.21.2.5 <u>J = 9 and 11 (Vertical and Horizontal Ramp Gust, Repsectively)</u>

Col. 11-20	(1)	Starting distance (in ground X-Y plane)	(ft)
21-30	(2)	1st max. velocity (positive down or north)	(ft/sec)
31-40	(3)	1st ramp length	(ft)
41-50	(4)	Distance gust is steady	(ft)
51-60	(5)	2nd ramp length	(ft)
61-70	(6)	2nd max. velocity (measured from first max. velocity)	(ft/sec)

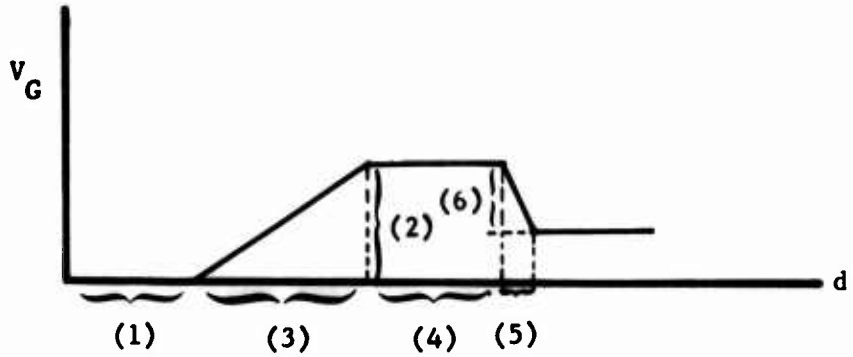

Ramp Gust

3.21.2.6 <u>J = 10 and J = 12 (Vertical and Horizontal Sine-Squared Gust, Respectively)</u>

Col. 11-20	(1)	Starting distance	(ft)
21-30	(2)	1st max. value (positive down or north)	(ft/sec)
31-40	(3)	1st gust length	(ft)
41-50	(4)	Distance between gusts	(ft)
51-60	(5)	2nd gust length	(ft)
61-70	(6)	2nd max. value	(ft/sec)

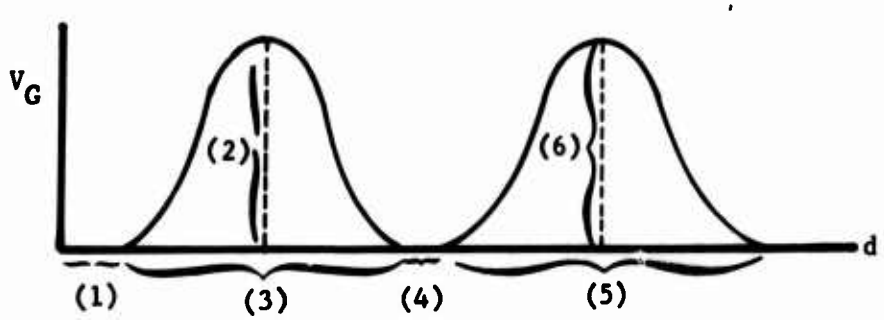

Sine-Squared Gust

3.21.2.7 J = 13 (Main Engine Torque)

Col.	11-20	Start time for rotor torque supplied variation	(sec)
	21-30	Ratio of torque desired to torque required at trim point	(ft-lb/ft-lb)
	31-40	Start time for rotor torque supplied recovery to torque required	(sec)
	41-50	(Inactive)	
	51-60	Engine accel. lag, zero to full power	(sec)

3.21.2.8 J = 14 (Auxiliary Jet Thrust)

Col.	11-20	Start time for jet thrust variation	(sec)
	21-30	Type of variation indicator, TVI	
	31-40	Rate of change of jet thrust, RJT	(lb/sec)
	41-50	Stop time for variation	(sec)
	51-60	Final value of jet thrust	(lb)
	61-70	Affected jet; = 1.0 for left jet, = 2.0 for right jet	

Three types of jet thrust variation are possible based on the value of TVI.

If TVI = 0.0, the rate RJT acts for the specified time, i.e., the stop time minus start time. The input for final value of jet thrust is ignored in this case.

If TVI = 1.0, the rate RJT acts until the final value of jet thrust specified in columns 51 to 60 is attained. The input for the stop time is ignored in this case.

Following one or more J = 14 cards where TVI = 0.0 or 1.0, it may be desirable to change the jet thrust back to its value at the start of the maneuver, the trim value. To do this, set TVI = 2.0, which will cause the final value of thrust (columns 51 to 60) to be reset to the trim value and TVI to be reset to 1.0. The specified rate will then act until the jet thrust returns to the trim value. The input stop time is ignored in this case. TVI should not equal 2.0 unless a previous J = 14 card has changed the jet thrust from the trim value.

3.21.2.9 J = 15 (Yaw Reactions by Pilot)

Col.	11-20	Start time	(sec)
	21-30	Acceptable sideslip not requiring correction, β_A	(deg)
	31-40	Pedal rate per sideslip, X_4	((in./sec)/deg))
	41-50	Pedal rate per sideslip rate, X_5	((in./sec)/(deg/sec))
	51-60	Rate of acceptable yaw velocity to maximum yaw velocity, R_A	
	61-70	Stop time	(sec)

This feature was developed before the automatic pilot feature discussed in Section 3.21.2.23 (J = 32) and should not be used in conjunction with it. If this feature is used, the pedals will be moved to minimize sideslip angle and rate during the specified time period. During this period, the "pilot" will be placed on "alert" under the following conditions:

$$|\beta| \geq \beta_A \quad \text{or} \quad |\dot{\beta}| \geq R_A |\dot{\beta}_{max}|$$

where

$\dot{\beta}_{max}$ = the largest sideslip rate experienced while the "pilot" has been on "alert;" initially equal to zero

When the "pilot" is on "alert", the rate of motion is

$$\dot{\delta}_{ped} = \beta X_4 + \dot{\beta} X_5$$

If the "pilot" is not on "alert", the rate is zero.

3.21.2.10 <u>J = 16 (Machine Gun Fire, Ramp Only)</u>

Col.	11-20	(1)	Start time	(sec)
	21-30	(2)	Stop time	(sec)
	31-40	(3)	Max. force (normally negative)	(lb)
	41-50	(4)	Ramp length	(sec)
	51-60		(Inactive)	
	61-70			

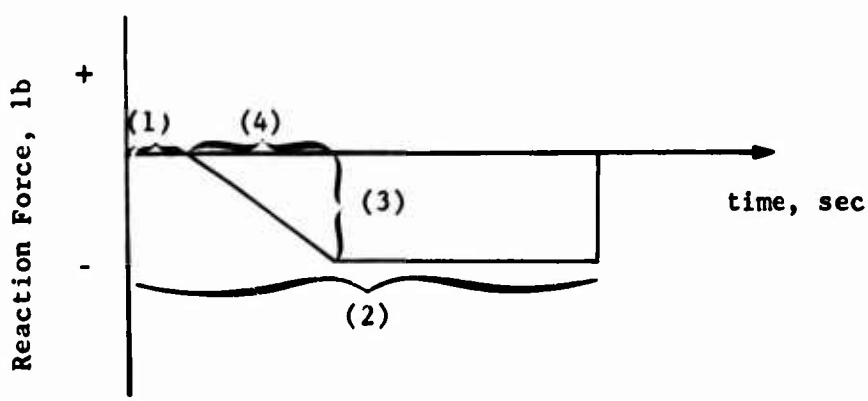

For the normal case of a weapon firing forward, the reaction force should be negative. See the Weapons Group (Section 3.16) for additional details.

3.21.2.11 J = 17 (F/A Mast Tilt on Both Rotors)

Col.	11-20	Start time for mast tilt	(sec)
	21-30	Rate of mast tilt	(deg/sec)
	31-40	Stop time for mast tilt	(sec)
	41-50	(inactive)	
	51-60	α, mast tilt angle at which rpm change is activated	(deg)
	61-70	$\Omega_H - \Omega_A$, change in rpm in converting from airplane mode to helicopter mode	(rpm)

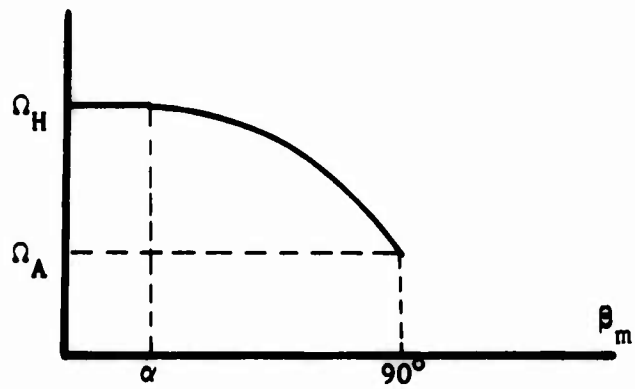

$$\Omega = \begin{cases} \Omega_A + (\Omega_H - \Omega_A)*\cos[90(\beta_m-\alpha)/90-\alpha)] & \text{if } \beta_m > \alpha \\ \Omega_H & \text{if } \beta_m \leq \alpha \end{cases}$$

where

β_m = F/A mast tilt angle

Ω = current rotor rpm

Ω_H = rotor rpm in helicopter mode ($\beta_m = 0°$)

Ω_A = rotor rpm in airplane mode ($\beta_m = 90°$)

3.21.2.12 J = 18 (Rotor Brake)

Col.	11-20	Maximum brake torque	(ft-lb)
	21-30	RPM at which brake engages, Ω_B	(rpm)
	31-40	Target azimuth position for stop	(deg)
	41-50	Time to stop applying brake	(sec)
	51-60	(Inactive)	
	61-70	(Inactive)	

3.21.2.13 <u>J = 19 (Pitch A.S.E.)</u>

Col.	11-20	Start time (activate A.S.E.)	(sec)
	21-30	F/A cyclic stick displacement/pitch displacement from reference pitch angle, X_2	(in./deg)
	31-40	F/A cyclic stick displacement/pitch velocity, X_3	(in./deg/sec)
	41-50	F/A cyclic stick displacement/pitch acceleration, X_4	(in./deg/sec^2)
	51-60	Reference pitch angle, X_5	(deg)
	61-70	Lag factor for mechanism, X_6	(sec)

Let δ = change in cyclic pitch for one time increment Δt
δ_1 = value of δ for the previous time increment
Θ = fuselage Euler angle pitch
q = fuselage pitch rate

then

$$\delta = [X_2(X_5-\Theta) + X_3 q + X_4 q + \delta_1 X_6/\Delta t]*[1/(1 + X_6/\Delta t)]$$

3.21.2.14 <u>J = 20 (Sinusoidal Movement of Controls or Mast)</u>

Col.	11-20	Start time	(sec)
	21-30	Frequency	(cps)
	31-40	Amplitude	(in. or deg)
	41-50	Stop time	(sec)
	51-60	Control to be moved	
	61-70	(Inactive)	

Amplitude is in inches for controls or degrees for mast tilt. The code for the control to be moved is

1.0 = Collective stick
2.0 = F/A cyclic stick
3.0 = Lateral cyclic stick
4.0 = Pedal
5.0 = F/A mast tilt

Note that if the control code is 5.0, the F/A mast tilt angle of <u>both</u> rotors is varied.

3.21.2.15 J = 21 and 22 (Flat Tracker for Main Rotor and Tail Rotor, Respectively)

Col.	11-20	Start time	(sec)
	21-30	Acceptable deviation	(deg)
	31-40	Rate	(deg/sec)
	41-50	F/A reference angle	(deg)
	51-60	Lateral reference angle	(deg)
	61-70	Angle selector	

The Flat Tracker makes control inputs to maintain the F/A and lateral flapping angles at desired angles. If the Angle Selector = 0.0, these desired angles are the Reference Angles input in columns 41→50 and 51→60. If the Angle Selector = 1.0, the desired angles are the flapping angles at TRIM. If the difference between the reference angles and the current flapping angles is less than the Acceptable Deviation, no control input is made.

3.21.2.16 J = 23 (RPM Dependent Hub Springs)

Col.	11-20	Rotor number (1.0 or 2.0)	
	21-30	K_B hub spring value in lower rpm range	(ft-lb/deg)
	31-40	Ω_1 top of lower rpm range	(rpm)
	41-50	Ω_2 bottom of upper rpm range	(rpm)
	51-60	(Inactive)	
	61-70	(Inactive)	

Let Ω be the rpm of Rotor 1, K_I be XMR(18) or XTR(18), as appropriate, and K_h be the rpm dependent value of the appropriate hub spring. Then

$$K_h = \begin{cases} K_I & \text{if } \Omega \geq \Omega_2 \\ \left(\dfrac{K_B - K_I}{\Omega_1 - \Omega_2}\right)\left(\Omega - \Omega_2\right) + K_I & \text{if } \Omega_1 < \Omega < \Omega_2 \\ K_B & \text{if } \Omega \leq \Omega_1 \end{cases}$$

in other words, the extreme values for the hub springs are K_B, and the input in the appropriate rotor group, K_I. Linear interpolation is used in the transition region.

3.21.2.17 J = 24, 25, 26 (SCAS Channels)

Col.	11-20	Time to activate SCAS Channel
	21-30	Time to turn off SCAS Channel
	31-40	(Inactive)
	41-50	(Inactive)
	51-60	(Inactive)
	61-70	(Inactive)

3.21.2.18 J = 27 (Horizontal Fold, for Main Rotor Only)

Col.	11-20	Start time	(sec after Ω=0)
	21-30	Rate	(deg/sec)
	31-40	Stop time	(sec after Ω=0)
	41-50	Blade number (each blade moves independently)	
	51-60	(Inactive)	
	61-70	(Inactive)	

3.21.2.19 J = 28 (RPM Dependent Flapping Stops)

Same as for J = 23 except that mechanism affected is flapping stops and K_B is in degrees.

3.21.2.20 J = 29 (Control Changer - to Lock or Unlock Swashplate)

Col.	11-20	Start time	(sec)
	21-30	Stop time	(sec)
	31-40	Indicator: = 0.0 if start time is in maneuver seconds, $\neq$0.0 if start time is in seconds after Ω=0.0	
	41-50	Indicator: = 0.0 if stop time is in maneuver seconds, $\neq$0.0 if stop time is in seconds after Ω=0.0	
	51-60	Indicates which controls to lock or unlock; 1.0 is for rotor 1 collective; 2.0 is for rotor 1 F/A cyclic; 4.0 is for rotor 1 lat. cyclic; 8.0 is for rotor 2 collective; for any combination, add the indicators. 0.0 is equivalent to 15.0, which affects all controls.	
	61-70	(Inactive)	

If this mechanism is switched off during a maneuver, swashplate settings will immediately assume the value dictated by the control positions. Care should be taken to set the controls so that there are no discontinuities.

3.21.2.21 J = 30 (Mechanism for Balancing Main Rotor Force and Moments During Horizontal Fold)

Col.	11-20	Start time	(sec after Ω=0)
	21-30	Stop time	(sec after Ω=0)
	31-40	∂Z-force/∂collective	(lb/deg)
	41-50	∂F/A flapping moment/ ∂ F/A cyclic	(ft-lb-deg)
	51-60	∂ Lat flapping moment/ ∂ Lat cyclic	(ft-lb-deg)
	61-70	Maximum rate of change of controls (collective and cyclic)	(deg/sec)

3.21.2.22 J = 31 (Changing Printout Frequency)

Col.	11-20	Time to change NPRINT	(sec)
	21-30	New NPRINT	
	31-40	Time to change NPRINT	(sec)
	41-50	New NPRINT	
	51-60	Time to change NPRINT	(sec)
	61-70	New NPRINT	

NPRINT must be input as a floating number, i.e., punch a decimal point on the data card. The use of NPRINT is as described for CARD 01, NPART = 2.

As an example of the use of this value of J, as well as an example of the use of the provision for different time increments on CARD 301, consider the following hypothetical situation.

A maneuver was run in which a pitch divergence occurred. Analysis of the output indicated that the divergence started between 3.5 and 3.75 seconds. The time increment used was .05 and NPRINT was 5 throughout the run which lasted 7.5 seconds.

A new maneuver was then set up, identical to the first except that the time card, CARD 301, now contained 0.0, 0.05, 3.5, 0.005, 3.75, 3.75 as the consecutive inputs instead of 0.0, 0.05, 7.5, blank, blank, blank which were used on the previous run. NPRINT on CARD 01 was changed from 5 to 70. An additional CARD 311 was input which had a J of 31. The number 3.5 was in Columns 11-20, the number 1.0 in Columns 21-30, and the rest of the card blank.

In the output (see Section 4 for a complete explanation of all outputs), the trim page was followed by the maneuver page for maneuver time of 0.0 second. The next time point for which output was given was 3.5 seconds and output was given at every 0.005 second until 3.75 seconds. The result was no output for time points of no interest, but complete coverage of the time interval of interest.

3.21.2.23 J = 32 (Automatic Pilot)

Col.	11-20	Time to activate autopilot	(sec)
	21-30	Maximum rate for cyclic stick motion	(%/sec)
	31-40	Maximum rate for collective stick motion	(%/sec)
	41-50	Maximum rate for pedal motion	(%/sec)
	51-60	Time interval to zero rates	(sec)
	61-70	Time interval to zero displacements	(sec)

CAUTION: At least one partial derivative matrix must be computed prior to activating the Automatic Pilot. Without such a matrix, execution will terminate when the Automatic Pilot is activated.

The Automatic Pilot control corrections are determined from the simultaneous solution of the three moment equations and the Z-force equation with the moment and force imbalances as the coefficient terms. The dependent

variables are the control corrections. If there is a prescribed input from any of the controls (J=1, 2, 3, or 4), the Automatic Pilot will not move that control.

3.21.2.24 J = 33 (G-Tracker)

Col.	11-20	Time to start variation of target g-level	(sec)
	21-30	First rate of change of target g-level	(g/sec)
	31-40	Time to stop first rate	(sec)
	41-50	Time to start second variation	(sec)
	51-60	Second rate of change of target g-level	(g/sec)
	61-70	Time to stop second rate	(sec)

The G-Tracker is designed to do a cyclic only, symmetrical pull-up or pushover to a specified g-level. In order to use this option, the Automatic Pilot must be turned on, and a J card for the collective stick should be included with zero inputs to lock the collective pitch.

3.21.2.25 J = 34 (Aerodynamic Brake Deployment)

Col.	11-20	Time to start change in deployment	(sec)
	21-30	Rate of deployment change	(%/sec)
	31-40	Time to stop change in deployment	(sec)
	41-50	Brake Number	
	51-60	(Inactive)	
	61-70	(Inactive)	

The Br: . Number (Col. 41-50) must be 1, 2, 3, or 4, which corresponds to the first, second, third, or fourth subgroup of the External Stores/Aerodynamic Brake Group (CARDS 121A-124C). If the Brake Number specified corresponds to a subgroup which is supposed to be an external store, i.e., weight greater than zero, execution is terminated. Deployment is stopped at 0 or 100% deployment regardless of the rate and time inputs.

3.21.2.26 J = 35 (External Store Drop)

Col.	11-20	Time to drop store (t_D)	(sec)
	21-30	Sequence number of store to be dropped	
	31-40	Duration of jettison reaction forces (Δt_{JF})	(sec)
	41-50	X-Reaction force (+ forward)	(lb)
	51-60	Y-Reaction force (+ right)	(lb)
	61-70	Z-Reaction force (+ down)	(lb)

The sequence number of the store to be dropped must be 1.0, 2.0, 3.0, or 4.0, i.e., the first, second, third, or fourth store/brake subgroup. If the sequence number corresponds to a subgroup which is not used or is an aerodynamic brake rather than a store (weight ≤ 0 instead of > 0), execution will terminate. The jettison reaction forces start acting at the drop time (t_D) and stop at $t_D + \Delta t_{JF}$ seconds of maneuver time. The reaction forces are defined in body axis. For example, if a store is

jettisoned straight down, the reaction force will be up and the Z-direction reaction force (Col. 61-70) should be negative.

3.21.2.27 <u>J = 36 (Change of Incidence or Control Surface Angles)</u>

Col.	11-20	Start time	(sec)
	21-30	Rate of angle change	(deg/sec)
	31-40	Stop time	(sec)
	41-50	Surface indicator, SI	
	51-60	Type of change indicator, CI	
	61-70	(Inactive)	

The surface indicator, SI, specifies which surface is involved.

$$SI = \begin{cases} 0 \text{ or } 5 \text{ for wing} \\ 1, 2, 3 \text{ or } 4 \text{ for Stabilizing Surface No. 1, No. 2, No. 3,} \\ \quad \text{or No. 4 respectively} \end{cases}$$

The type of change indicator, CI, specifies the angle to be changed.

$$CI \begin{cases} = 0.0 \text{ for change of incidence angle} \\ \neq 0.0 \text{ for change of control surface, or flap, angle} \end{cases}$$

For the wing, the angle change is symmetrical. For all surfaces, positive incidence change is leading edge up; positive control surface deflection is trailing edge down.

3.22 PLOTTING OF MANEUVER TIME HISTORY DATA

Whenever maneuver data are available, i.e., following runs with NPART = 2, 4, or 5, or when data have been called from tape storage by NPART = 8, the 400 series of cards may be used to plot the data. This procedure is an option. If it is not to be used, simply omit the 400-series cards. The data may be plotted on the computer printer or put on tape for plotting by the CALCOMP plotter. Consult your local programmer for the proper setup of jobs which write a tape for CALCOMP plotting.

CARD 401

Column 2 must contain the integer 3 to call the plotting routine. NPRINT specifies that the first and every NPRINTth data point following are to be plotted. If NPRINT = 0, it is reset to unity.

CARDS 402A, 402B, etc.

One 402-type card is required for each plot. A maximum of 30 of these cards is permitted. Each plot may contain one to three variables. The first three inputs on a 402-type card are the code numbers for the variable(s) to be plotted. The code numbers must be integers. If only one variable is to be plotted, the code numbers must be in columns 3-5; if only two are to be plotted, only columns 3-5 and 8-10 are to be used. The code numbers are given in Section 6.

KEY controls where the plotting is done

= 0 for CALCOMP only
= 1 for printer only
= 2 for both

KEYS controls the reading of additional 402-type cards

= 1 when another 402-type card follows
= 0 for last 402-type card

The program internally computes its own scales for plotting each variable based on the maximum and minimum values of the variables during the time history and internally specified minimum scales. The internal minimum scale may be overridden for each variable with the last three inputs on the 402-type card. The minimum scale inputs are in units of the appropriate variable per inch for printer plots and units per centimeter for CALCOMP plots.

3.23 HARMONIC ANALYSIS OF MANEUVER TIME HISTORY DATA

When maneuver data are available, the 500-series cards may be used to perform harmonic analysis of specified variables. This procedure is an option. If it is not to be used, simply omit the 500-series cards. Consult your local programmer for proper setup of jobs which write a tape for CALCOMP plotting. Refer to Section 6 for the code numbers discussed below.

CARD 501

NOP in Column 2 must contain the integer 9 to call the harmonic analysis routine.

AL(1) is the start time and AH(1) is the stop time for the analysis. Both times are measured in seconds from the start time of the maneuver. The difference between the two times is referred to as Δt_A, the time interval for analysis:

$$\Delta t_A = AH(1) - AL(1)$$

NVARA is the total number of variables which are to be analyzed. NVARA must be less than or equal to 30 and an integer input.

AL(2) specifies the baseline frequency (ω) for the analysis. If AL(2) > 0.0, the input is taken to be ω in hertz (cycles per second). If AL(2) = 0.0, ω is set equal to the main rotor one-per-rev frequency

$$\omega = \Omega_1/60 \text{ hz}$$

where Ω_1 is the rotation speed of Rotor 1 in rpm. If AL(2) < 0.0,

$$\omega = \Omega_2/60 \text{ hz}$$

where Ω_2 is the Rotor 2 rpm. If AL(2) $\leq$ 0.0 and the rotor rpm changes during Δt_A, the appropriate one-per-rev frequency at AL(1) seconds maneuver time will be used for the analysis.

If AL(2) $\leq$ 0.0, it is necessary that

$$\Delta t_A \geq 1/\omega$$

If AL(2) > 0.0, this condition should also be met; otherwise, the data generated will be meaningless.

That is, the time interval for analysis must be greater than or equal to the time for one complete revolution of the appropriate rotor. However, it is not necessary that Δt_A be an integer multiple of $1/\omega$.

The analysis computes a function of amplitude versus frequency, $A(k\omega)$, for each of the NVARA variables whose code number is input on the 502-type cards discussed below. In the analysis, each variable is assumed to be a function of time, f(t).

$$f(t) = a_o + \sum_{k=1}^{N} [a_k \cos(2\pi k\omega t) + b_k \sin(2\pi k\omega t)]$$

The summation variable N is defined as

$$N = [(n-1)/2] + 1$$

where n equals the number of time points in the Δt_A interval or 500, whichever is smaller. The brackets ([ ]) in the equation for N indicate that the enclosed term is truncated to be an integer. The amplitude function is then

$$A(k\omega) = \sqrt{a_k^2 + b_k^2}$$

NVARB controls the output of $A(k\omega)$. If NVARB = 0, the data are tabulated on the printer only; if NVARB = 1, the data are stored on magnetic tape for CALCOMP plotting (use 10357, centimeter paper); if NVARB = 2, the data are both tabulated on the printer and stored on tape.

CARDS 502, 502B, etc.

These cards contain the code numbers of the variables to be analyzed. A total of NVARA code numbers must be included in 14I5 format using as many cards as required. No completely blank cards are permitted.

3.24 VECTOR ANALYSIS OF MANEUVER TIME HISTORY DATA

When maneuver data are available, the 600-series cards may be used to perform a vector analysis of selected variables. This procedure is an option which uses the technique of least-squared-errors curve fitting. If it is not to be used, simply omit the 600-series cards. Consult your local programmer for proper setup of jobs which write a tape for CALCOMP plotting. Refer to Section 6 for the code numbers discussed below.

CARD 601

Columns 1 and 2 must contain the integer 11 to call the curve-fitting routine. This procedure has three possible steps to it. The first step must be performed if either the second or third step is to be performed. The second and third steps are independent of each other, and each is optional.

Step 1:

Initially, the time histories, f(t), of the NVARA curves whose code numbers are given on the 602-type card(s) are curve fit to the equation

$$f(t) = A + B \sin(\omega t + \phi)$$

where ω is the baseline frequency, AL(1), and A, B, and ϕ are the constant, amplitude, and phase angle to be computed. This step will yield NVARA sets of A, B, and ϕ values. Permissible values of NVARA are 1 to 100.

Step 2:

Next, the amplitudes and phase angles computed in Step 1 may be compared to each other. The values computed are

$$R_B = B_i/B_x = \text{amplitude ratio}$$

$$R_\phi = \phi_i - \phi_x = \text{phase angle difference}$$

where the subscript x indicates one of the NVARB reference variables and the subscript i indicates one of the NX variables which is to be compared to that reference value. The code numbers are input on 603-type cards. Note that only those code numbers used in Step 1 can be used in Step 2 and that the code number of a reference variable must not be included in the corresponding NX code numbers. Step 2 may be bypassed by setting NVARB = 0 and omitting all 603-type cards. Permissible values of NVARB and NX are 0 to 100.

Step 3:

The curve fits from Step 1 can themselves be fitted to an equation of the following form:

$$C = KD*D + KE*E + F$$

where C, D, and E are the f(t) corresponding to the 3 code numbers input on 604-type cards. Substituting each f(t) into the above equation, expanding the $\sin(\omega t + \phi)$ term to $(\sin\omega t \cos\phi + \cos\omega t \sin\phi)$, and equating the coefficients of like harmonics yields three equations in the three unknowns of KD, KE, and F. The equations are solved, and the three computed constants are output.

Since AL(2) of the 604-type cards must be included, AL(2) curve fits of the coefficients from Step 1 will be made. Note that, as in Step 2, only code numbers (variables) used in Step 1 can be used in Step 3. This step may be bypassed by setting AL(2) = 0.0 and omitting all 604-type cards. Permissible values of AL(2) = 0.0 to 100.

CARDS 602A, 602B, etc.

The 602-type cards contain the NVARA code numbers for the variables to be curve fit by Step 1. Up to 14 code numbers may be input on each card in integer fields of 5 (14I5 format). Blank cards are not permitted.

CARDS 603A, 603B, etc.

NVARB sets of the 603-type card must be included. Each set contains a code number for a reference variable plus the quantity (NX) and code numbers of the other variables to be used in Step 2. Each card is in 14I5 format. No blank cards are permitted.

CARDS 604A, 604B, etc.

AL(2) cards of the 604-type must be included. These cards contain the code numbers of the variables to be used in Step 3.

3.25 STORING MANEUVER TIME HISTORY DATA ON TAPE

CARD 701

Following a maneuver (NPART = 2, 4, or 5), it may be desirable to store the time history of the maneuver on tape so that the data can be recalled later for additional analysis or plotting. Inputs of 8 and 0 in Columns 2 and 10 respectively will store the data. However, consult your local programmer for the proper setup of the job before attempting to use this option. See NPART = 8 on CARD 01 for instructions on retrieving the data that a CARD 701 stores.

3.26 MISCELLANEOUS

3.26.1 Configuration Determination

The program examines several inputs to determine the configuration of the rotorcraft which is being simulated. The inputs are

XTR(45), the Tail Rotor lateral mast tilt
XFS(5), the stationline of the rotorcraft cg
XMR(8), the stationline of the Main Rotor shaft pivot point
XTR(8), the stationline of the Tail Rotor shaft pivot point

Using the following definitions

$$(l_x)_{R1} = (XMR(8) - XFS(5))/12$$
$$(l_x)_{R2} = (XTR(8) - XFS(5))/12$$

and the following logic

TRIND = 0
TRIND1 = 0
IF $|XTR(45)| < 45^\circ$, TRIND = 1
If TRIND $\neq$ 0 and $|(l_x)_{R1}-(l_x)_{R2}| \leq$ 5 feet, TRIND1 = 1

The value of the configuration variable KONFIG is then defined as

KONFIG = 1. + TRIND + TRIND1

Based on the value of KONFIG, the program assigns names to the input rotor groups and assumes a type of configuration as shown in Table 3-17.

TABLE 3-17. ROTOR NAMING CONVENTION

Value of KONFIG	Defined Configuration	Names Assigned by Program	
		Main Rotor Group (Rotor 1)	Tail Rotor Group (Rotor 2)
1	Single-main-rotor helicopter	MAIN	TAIL
2	Tandem-rotor helicopter	FORWARD	AFT
3	Side-by-Side*	RIGHT	LEFT

* Same as tilt-rotor, composite, or coaxial

The value of KONFIG is then used as follows:

(1) To determine if the Supplemental Rotor Controls Subgroup should be input, i.e., if KONFIG $\neq$ 1 an error message is generated, since the other two configurations cannot be controlled without the XCRT array.

(2) To eliminate numeric "noise" in the partial derivatives for a particular configuration; e.g., if the Supplemental Rotor Controls Subgroup is not input for KONFIG = 1, the Rotor 1 flapping moments due to pedal displacement and the Rotor 2 flapping moments due to displacement of collective and cyclic sticks are set to zero.

(3) To define the names to be printed in the output heading for each rotor.

(4) To modify control linkages or angles to be compatible with the configuration.

Note that in naming the rotors, the value of KONFIG may not assign the name expected to a particular rotor. For example, consider a tandem-rotor helicopter. In naming the rotors, the program assumes that the front rotor rotates counterclockwise and was input to the Main Rotor Group and that the aft rotor rotates clockwise and was input to the Tail Rotor Group. However, the user may want to reverse the rotation of each rotor, in which case the aft rotor would be input to the Main Rotor Group and the forward rotor to the Tail Rotor Group.

The program does not check to see if the rotor it is calling FORWARD is actually forward of the other rotor. Hence, if the user does swap rotor groups to reverse their rotation, the program will be ignorant of it and will still call the rotor input to the Main Rotor Group the FORWARD rotor. The same situation applies to the RIGHT and LEFT rotors of side-by-side configurations. A coaxial configuration is treated like a side-by-side; its rotors are named RIGHT and LEFT rather than indicating which rotor is on top or bottom.

Note, however, when swapping rotor groups that the sign conventions for positive lateral swashplate angle are not the same for both rotors. Hence, the user should check all control linkages prior to running a deck with swapped rotors.

3.26.2 Induced Velocity Distribution

If the Rotor-Induced Velocity Distribution Table is not read in or not used for a particular rotor, the distribution of the average induced velocity over the rotor disk is made by an equation internal to the program. The equation is

$$v_i = \bar{V}_i \left[\frac{4}{3} x \left[1 + f_1(\mu)*\cos \psi\right] + f_2(x, \psi)*f_1(\mu)*K_{27} \sqrt{-0.5*V_N^2 \sqrt{0.25*V_N^4 + (\bar{V}_i)_N^2}} \right]$$

where v_i is the local induced velocity

$\bar{V}_i$ is the average induced velocity across the rotor disc

x is nondimensional blade station (0 = root, 1 = tip)

ψ is the blade azimuth angle

K_{27} is XMR(27) or XTR(27) as appropriate

V_N is the flight path airspeed in ft/sec divided by 1.0 ft/sec

$(\bar{V}_i)_N$ is $\bar{V}_i$ in ft/sec divided by 1.0 ft/sec

The two functions, f_1 and f_2, are defined as follows:

$$f_1(\mu) = \begin{cases} 0.5 & \text{if } \Omega < 1 \text{ rad/sec} \\ 11.25\,\mu, & \text{if } \Omega \geq 1 \text{ and } \mu < 0.1067 \\ 1.36 - 1.5\,\mu, & \text{if } \Omega \geq 1 \text{ and } 0.1067 \leq \mu < 0.5733 \\ 0.5 \;, & \text{if } \Omega \geq 1 \text{ and } \mu \geq 0.573 \end{cases}$$

$$f_2(x,\psi) = \begin{cases} 0.0 \;, & \text{if } (x < .7) \text{ or } (105^\circ < \psi < 255^\circ) \\ & \text{or } (315^\circ < \psi < 360^\circ) \text{ or } (0^\circ < \psi < 45^\circ) \\ 1.0 \;, & \text{if } (x \geq 0.7) \text{ and if } (45^\circ \leq \psi \leq 105^\circ) \text{ or} \\ & (225^\circ \leq \psi \leq 315^\circ) \end{cases}$$

The f_2 function is intended to account for tip vortex effect as discussed in Section 3.6. The calculation of $\bar{V}_i$ is described in Section 3.3.1 of Volume I of this report.

3.26.3 Data for Fuselage Aerodynamic Inputs

When wind tunnel data are available, the digital computer program AS812A can be used to reduce the data to the AGAJ73 input format. The program was written in the PL/1 computer language. The input formats were chosen so that either fixed or floating point numbers may be input for any numeric data. It is not necessary to right-justify fixed point inputs.

The input data to the program consists of two cards of identifying comments and program logic variables and up to 300 data points of force and

moment wind tunnel data. Each data point is input on one card and includes data point identification and the values of the pitch and yaw angles and the six force and moment vectors at those angles.

The AS812A is not an integral part of AGAJ73. AS812A only prepares data for input to AGAJ73.

3.26.3.1 Input Format for AS812A

Card 1

Col 1 → 70	Alphanumeric identifying comments
Col 71 → 80	SC, Scale Correction factor

Card 2

Col 1 → 70	Alphanumeric identifying comments
Col 71 → 75	NPTS, Number of cards (data points) in the following data set
Col 76 → 80	IO, Output selector switch (≠ 1 print only; = 1 print and punch)

Card 3 Through (NPTS + 2)

Col 1 → 5	The test (or run) number, or other numeric identification	
Col 6 → 11	Pitch Angle	(deg)
Col 12 → 17	Yaw Angle	(deg)
Col 18 → 25	Lift/(Dynamic Pressure)	(ft^2)
Col 26 → 33	Drag/(Dynamic Pressure)	(ft^2)
Col 34 → 41	Pitching Moment/(Dynamic Pressure)	(ft^3)
Col 42 → 49	Side Force/(Dynamic Pressure)	(ft^2)
Col 50 → 57	Rolling Moment/(Dynamic Pressure)	(ft^3)
Col 58 → 65	Yawing Moment/(Dynamic Pressure)	(ft^3)
Col 76 → 77	Sequence number of test point in data run, or other numeric identification	

Card NPTS + 3 Col 1 → 10 CODE

3.26.3.2 User's Guide to AS812A Input Format

This program performs least-squared-error curve fits of wind tunnel force and moment data in order to determine the inputs to the Nominal Angle Fuselage Force and Moment Equations of the Rotorcraft Flight Simulation Computer Program AGAJ73.

Card 1

The alphanumeric identifying comments are the first line of the printed output and, if punched output is selected, the first card of the punched output.

SC is the ratio of the desired scale of the output data to the scale of the input data; e.g., if full-scale data (scale = 1) is desired and the input data are from a 1/8 scale model where the data are still in model scale, then SC = 1/(1/8) = 8 If the input data has already been converted to full scale, then SC = 1. If SC is deleted, or zero, the program sets SC = 1.

Card 2

The alphanumeric identifying comments are the second line of the printed output and, if punched output is selected, the second card of the punched output.

NPTS is the number of data points. It is equal to the number of cards in the data set which follow Card 2. The value of NPTS must be less than or equal to 300.

The value of IO determines the type of output from the program.

IO ≠ 1 Only printed (on-line) output is to be provided.

IO = 1 In addition to the printed output, the coefficients calculated are punched on cards in the format required for Cards 23 through 2E of AGAJ73, the Rotorcraft Flight Simulation Program.

Card 3 Through (NPTS + 2)

The input format used is based on the format in which test data on punched cards has generally been provided. If the user finds that his data is generally provided in a different format, the program can be modified to accept another format without too much difficulty. AS812A does not have the capability of resolving data from one coordinate system to another. Hence, input data to AS812A must be in the same system as AGAJ73 inputs (i.e., the wind-axis reference system).

Card NPTS + 3

The input CODE specifies the type data which follows:

CODE = 0 All new data follows; a new Card 1 follows this card.

CODE = 1 Data points are to be added to the data previously computed; a new Card 2 follows (Card 1 is deleted); NPTS on the new Card 2 is only the number of data points (cards) added to the data set, not the new total number of points in the set.

If CODE ≠ 0 or ≠ 1, the program assumes all data has been processed, and the run is terminated.

3.26.3.3 Output Guide for AS812A

The user may select printed output only or printed and punched output. The printed output includes the coefficients of the fitted equations and comparison of the calculated and input data points. If punched output is selected in addition to the printed output, fourteen cards are punched. The first two cards contain the identifying comments from AS812A Cards 1 and 2. The remaining twelve cards contain all the coefficients for the Nominal Angle Equations in the sequence and format required for AGAJ73, i.e., Cards 23 through 2E of the Fuselage Group. The data are fitted to the following equations:

Lift (L) and Pitching Moment (M):

$$
\begin{aligned}
L \text{ or } M = {} & C_{00} + C_{10} \sin \psi_w + C_{20} \sin^2 \psi_w \\
& + [C_{01} + C_{11} \sin \psi_w + C_{21} \sin^2 \psi_w] \sin (2\theta_w) \\
& + [C_{02} + C_{12} \sin \psi_w] \sin^2 (2\theta_w) \\
& + C_{03} \sin^3 (2\theta_w)
\end{aligned}
$$

Drag (D):

$$
\begin{aligned}
D = {} & C_{00} + C_{10} \sin \psi_w + C_{20} \sin^2 \psi_w \\
& + [C_{01} + C_{11} \sin \psi_w + C_{21} \sin^2 \psi_w] \sin \theta_w \\
& + [C_{02} + C_{12} \sin \psi_w] \sin^2 \theta_w \\
& + C_{03} \sin^3 \theta_w
\end{aligned}
$$

Side Force (Y), Rolling Moment (l), and Yawing Moment (N):

$$
\begin{aligned}
Y, l, \text{ or } N = {} & C_{00} + C_{10} \sin \theta_w + C_{20} \sin^2 \theta_w + C_{30} \sin^3 \theta_w \\
& + [C_{01} + C_{11} \sin \theta_w + C_{12} \sin^2 \theta_w] \sin (2\psi_w) \\
& + [C_{02} + C_{12} \sin \theta_w] \sin^2 (2\psi_w) \\
& + [C_{03} + C_{13} \sin \theta_w] \sin^3 (2\psi_w)
\end{aligned}
$$

where θ_w = wind tunnel pitch angle

ψ_w = wind tunnel yaw angle

C_{ij} = coefficients of equations

In the output data the coefficients, C_{ij}, are identified by the subscript, ij. The coefficients are printed out in "nondimensional" and "dimensional" form. "Nondimensional" indicates that the coefficients are in units of ft^2 or ft^3, which are the units of C_{ij} in the above equations. "Dimensional" indicates that the coefficients are in units of ft^2 or ft^3 per degree to the appropriate power. The "dimensional" coefficients are those that would be used if the above equations were redefined for small angles, e.g., $\sin \psi_w \approx \psi_w$, $\sin^2(2\theta_w) \approx 4(\theta_w)^2$, and θ_w and ψ_w were defined to be in degrees. The "dimensional" coefficients are the inputs to AGAJ73. Initialization routines in AGAJ73 convert the coefficients to their "nondimensional" values prior to using them in calculations. The sequence number of the coefficient in the AGAJ73 XFS array is given at the far right, e.g., for lift data, C_{00} is input to XFS(15).

Following the coefficient data is a tabulation of the input and calculated data. The first five columns are the wind tunnel input data:

RUN = Wind tunnel run number
PT = Number of the data point in the run
PITCH = Pitch angle, deg
YAW = Yaw angle, deg
INPUT = Force or moment (corrected to full scale), ft^2 or ft^3

The next three columns are calculated data:

CALCULATION = Value of force or moment calculated using the appropriate equation and coefficients
DELTA = Input value minus calculated value (INPUT-CALCULATION)
REL-DEL = Delta divided by input value (DELTA/INPUT)

At the end of these data are two parameters useful in judging the quality of the curve fit:

SUM OF ABS (ERRORS)/POINTS = $(\Sigma \text{ DELTA })/\text{NPTS}$
RMS ERROR/POINTS = $\sqrt{\Sigma(\text{DELTA})^2/\text{NPTS}}$

A printout of the inputs to AGAJ73 in the format of AGAJ73 follows the parameters.

See Figure 3-13 for a sample printout from AS812A.

PROGRAM AS812A
CURVE FIT ANALYSIS OF WIND TUNNEL DATA
USING METHOD OF LEAST-SQUARED ERRORS

MODEL 206 TEST 294 FUSELAGE W/SKID GEAR RUNS 210 THRU 214
FINAL CHECK CASES

DRAG DATA

COEFFICIENTS OF EQUATION

SUB-SCRIPT	NON-DIMENSIONAL	DIMENSIONAL	AGAJ73 INPUT
00	2.10 FT**2	2.099379 FT**2/DEG**0	XFS(29)
10	-0.66 FT**2	-0.011553 FT**2/DEG**1	XFS(35)
20	67.67 FT**2	0.020613 FT**2/DEG**2	XFS(36)
01	-2.92 FT**2	-0.050906 FT**2/DEG**1	XFS(37)
11	2.02 FT**2	0.000615 FT**2/DEG**2	XFS(38)
21	0.84 FT**2	0.000004 FT**2/DEG**3	XFS(39)
02	29.90 FT**2	0.009108 FT**2/DEG**2	XFS(40)
12	-1.95 FT**2	-0.000010 FT**2/DEG**3	XFS(41)
03	-10.99 FT**2	-0.000058 FT**2/DEG**3	XFS(42)

INPUT DATA AND CALCULATIONS

RUN/PT		PITCH	YAW	INPUT	CALCULATION	DELTA	%REL-DEL
210	1	-11.76	0.00	3.8100	4.0289	-0.219	-0.05746
210	2	-10.46	-16.01	9.3000	9.1174	0.183	0.01964
210	3	-10.53	-12.01	6.6600	6.8494	-0.189	-0.02844
210	4	-10.45	-8.01	4.9300	5.1408	-0.211	-0.04276
210	5	-10.69	-6.01	4.5200	4.5950	-0.075	-0.01660
210	6	-10.76	-4.00	4.2800	4.1633	0.117	0.02726
210	7	[illegible]	[illegible]	4.0600	4.1110	-0.051	-0.01256
[illegible]		[illegible]	[illegible]	[illegible]	4.0404	-0.230	-0.06048

Figure 3-13. Sample Output From Program AS812A.

(Data for Runs 211 through 213 omitted).

214	5	18.08	-14.01	[illegible]	[illegible]	[illegible]	[illegible]
214	6	18.33	-11.99	6.6800	[illegible]	[illegible]	[illegible]
214	7	18.49	-10.00	5.9600	5.9174	[illegible]	[illegible]
214	8	18.60	-8.01	5.2300	5.2036	0.026	0.00505
214	9	18.69	-6.01	4.6800	4.6407	0.039	0.00840
214	10	18.73	-4.01	4.3200	4.2292	0.091	0.02103
214	11	18.75	-2.01	4.1100	3.9773	0.133	0.03230
214	12	18.76	0.00	4.0600	3.8883	0.172	0.04229
214	13	18.76	1.99	4.1500	3.9628	0.187	0.04512
214	14	18.75	4.01	4.3000	4.2034	0.097	0.02247
214	15	18.75	5.99	4.5300	4.6036	-0.074	-0.01625
214	16	18.75	8.01	5.0700	5.1754	-0.105	-0.02079
214	17	18.67	10.01	5.7500	5.8842	-0.134	-0.02335
214	18	18.49	12.01	6.5300	6.7271	-0.197	-0.03019
214	19	18.35	13.99	7.6000	7.7187	-0.119	-0.01562
214	20	18.19	15.99	8.7100	8.8619	-0.152	-0.01744
214	21	18.05	17.99	9.9700	10.1497	-0.180	-0.01803
214	22	18.06	20.02	11.6700	11.6261	0.044	0.00376
214	23	18.78	-0.01	4.0600	3.8926	0.167	0.04123

SUM OF ABS(ERRORS)/POINTS= 0.2304
RMS ERROR/POINTS= 0.0267

```
INPUTS FOR AGAJ73
    2.0994                                                                  -0.011553AGAJ73  25
  0.020613 -0.050906  0.000615  0.000004  0.009108 -0.000016 -0.000058AGAJ73  26
```

Figure 3-13. Concluded.

3.26.4 Rotor Hub and Control System Geometry

The sketch below is a top and side view of the geometry of the main rotor hub and control system and includes the sign conventions for the XMR inputs that define this geometry. The sketch may also be used for the second (or tail) rotor by interpreting it as a view from the bottom of rotor disk rather than the top. Note that the sketch depicts a leading-edge pitch horn. However, the sign conventions are not a function of the type of pitch horn; hence, to define a trailing-edge pitch horn, simply input a negative length for l_P and an angle greater than 90 degrees for δ_3. See Section 8.1 and Figures 8-5, 8-6, and 8-7 in Volume I for additional details.

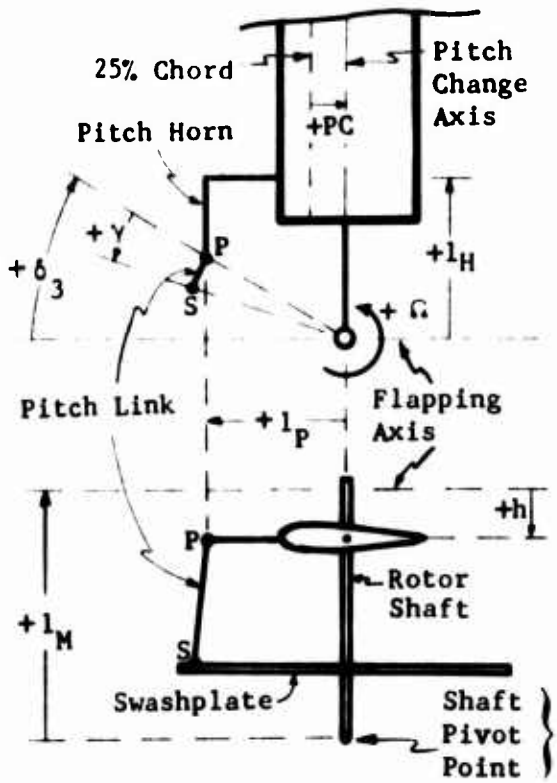

h = XMR(2)

PC = XMR(23)

δ_3 = XMR(24)

l_P = XMR(31)

l_H = XMR(32)

γ = XMR(43)

l_M = XMR(46)

Location Defined by XMR(8), XMR(9), and XMR(10)

Point P is the pitch-link attach point on the pitch horn. Point S is the pitch-link attach point on the swashplate. The distance from Point P to Point S is the length of the pitch link.

The lengths l_P and l_H are used to compute pitch-link loads in the following manner. The torsional moment at l_H inches from the hub is divided by l_P, the moment arm of the pitch-link attach point. (The torsional moment inboard of l_H is set to zero). The resulting force, or pitch-link load (in pounds), is printed in the 0% radius (root) location on the torsional loads page.

4. OUTPUT GUIDE

For the purpose of identification, the output available to be printed is divided into several groups. These groups are listed in Table 4-1 with a statement as to when each group can, cannot, or may be printed. The sequence of the groups in the table corresponds to the sequence in which they are printed in the output and discussed in this section. As the table indicates, not all groups will necessarily be printed during a particular run. The printout of most groups depends on the type of run (value of NPART), the type of data included in the input deck (aeroelastic blade data, airfoil data tables, etc.), and the program options activated by the input data (time-variant trim, blade element data, etc.). Following a discussion of the reference systems and sign conventions used for the input and output data, the printout for each of the groups in Table 4-1 is discussed.

4.1 REFERENCE SYSTEMS

All of the basic analyses in C81 were developed and programmed in Cartesian coordinate systems. The coordinate systems which are of most importance to the user include the ground, fuselage, body, aerodynamic, surface, rotor-shaft, rotor analysis, and wind reference (or axis) systems. Each reference system is oriented with respect to one or more of the other systems by a set of ordered angular rotations. The most common example of this method of orienting reference systems is the method of Euler angles. C81 uses Euler angles to orient the body reference system with respect to the ground reference. See Figure 4-1. Both reference systems are right-handed coordinate systems with positive rotations defined by the right hand rule. Hence, the three rotations in order are:

(1) Psi (ψ): a positive rotation about the ground reference Z axis; a yaw rotation,

(2) Theta (θ): a positive rotation about the Y axis which has been rotated through ψ previously; a pitch rotation, and

(3) Phi (ϕ): a positive rotation about the X axis which has been oriented by the ψ and θ rotations; a roll rotation.

Although all reference systems in C81 are oriented by ordered rotations, not all the ordered angles and their sign conventions are truly Euler angles. This point will be made clear in the following discussion of the seven reference systems mentioned above.

4.1.1 Ground Reference System

The C81 Ground Reference System, a right-handed coordinate system, is fixed to the surface of a flat earth with its Z axis pointing down through the center of the gravitational field, its X axis pointing due north, and its Y axis pointing due east. The gravitational constant is defined to be

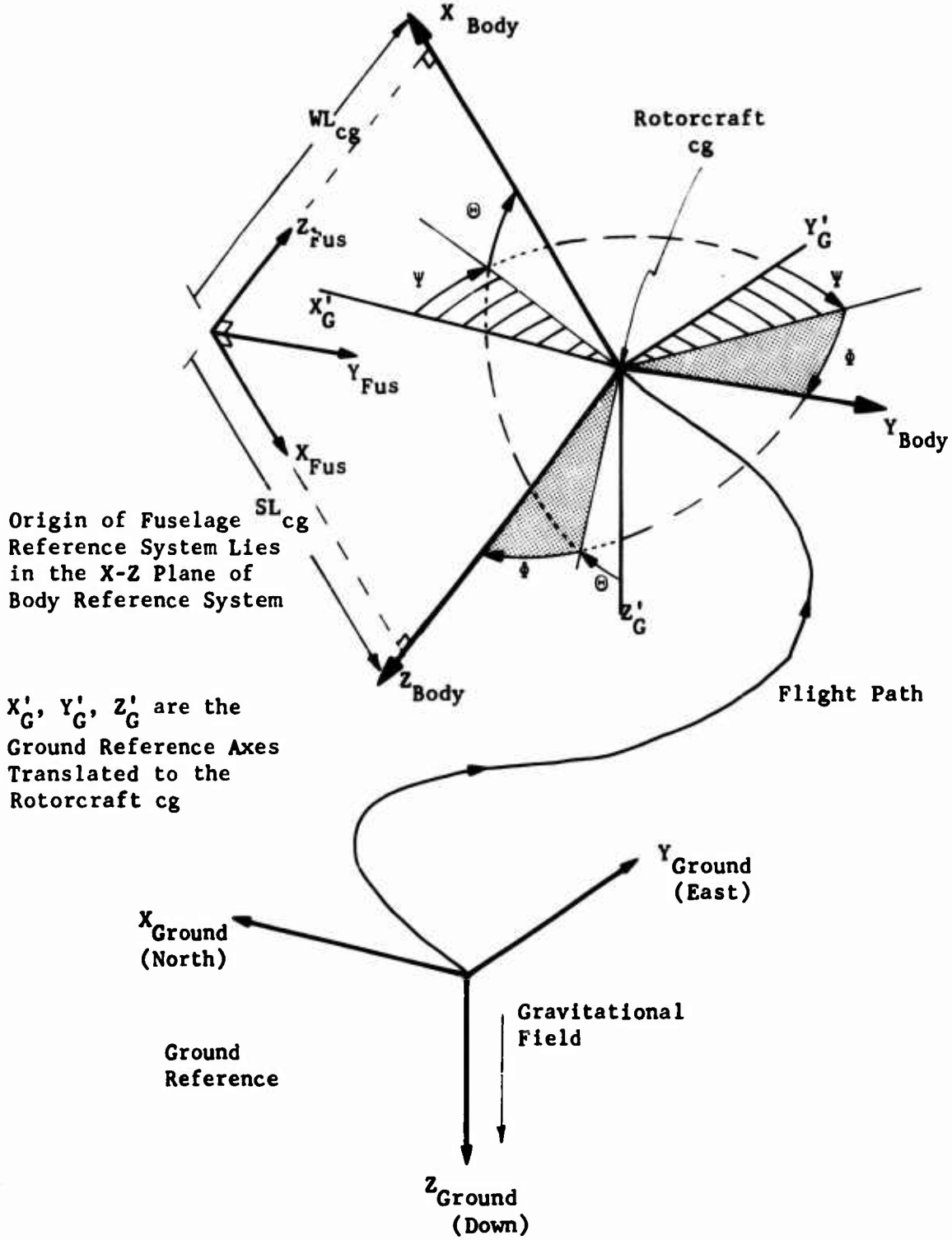

Figure 4-1. Relationship of Ground, Body, and Fuselage Reference Systems.

TABLE 4-1. OUTPUT GROUPS

Output Groups	Value of NPART 1	2	4	5	7	8	10
Input Data							
Data Deck Listing	Yes	Yes	Yes	Yes	Yes	Yes	No
Problem Identification	Norm	Norm	Norm	Norm	Norm	Norm	Norm
Basic Data Groups	Norm	Norm	Norm	No	Norm	No	Norm
Aeroelastic Blade Data	(A)	(A)	(A)	No	(A)	No	No
Check of Aerodynamic Inputs	(B)	(B)	(B)	No	(B)	No	(B)
Accelerated Flight Conditions	Yes	Yes	Yes	No	Yes	No	Yes
Maneuver Specification	No	Norm	Norm	Norm	No	No	No
Airfoil, RIVD, RWAS Data Tables	(A)	(A)	(A)	No	(A)	No	No
Trim Iteration Page(s)	Norm	Norm	Norm	No	Norm	No	Yes
Standard Trim Page	Yes	Yes	Yes	No	Yes	No	Yes
Optional Trim Page	(C)	(C)	(C)	No	(C)	No	(C)
Time-Variant Trim Data	(C)	(C)	(C)	No	No	No	(C)
Maneuver-Time-Point Printout							
External Store Drop	No	(C)	(C)	(C)	No	No	No
Time-Point Page(s)	No	Norm	Norm	Norm	No	No	No
Rotor Elastic Response	No	(D)	(D)	(D)	No	No	No
Time History Plots	No	(C)	(C)	(C)	No	(C)	No
Output of Vector and Harmonic Analysis	No	(C)	(C)	(C)	No	(C)	No
Output of Stability Analysis	No	(C)	(C)	(C)	Yes	No	(C)
Blade Aerodynamic Data	(C)	(C)	(C)	(C)	(C)	No	(C)
Blade Bending Moment Data	No	(C)	(C)	(C)	No	No	No

Yes : The group is always printed for specified value of NPART.
No : The group is never printed for specified value of NPART.
Norm: The group is normally printed, but can be suppressed by appropriate input values.
(A) : The group is printed only if the corresponding data block(s) or table(s) is input; printout can be suppressed.
(B) : The group is printed only if errors are detected in the aerodynamic inputs.
(C) : The group is printed only if the corresponding operation or option is called for by input data.
(D) : The group is printed only if aeroelastic blade data are available.

32.17 feet per second squared in C81. During trim and at time zero of all maneuvers, the ground reference X and Y coordinates of the rotorcraft center of gravity are zero, and the Z coordinate is the negative of the geometric altitude.

4.1.2 Fuselage Reference System

The input format of C81 uses the Fuselage Reference System, a right-handed coordinate system, to define the locations of components or properties on the rotorcraft, e.g., the shaft pivot point, the center of gravity, and centers of pressure for the aerodynamic surfaces. As its name implies, this system is fixed with respect to the structure of the rotorcraft. The system is equivalent to the conventional Stationline-Buttline-Waterline (SBW) coordinate system used in the design of most aircraft. The location of its origin is arbitrary. However, for AGAJ73, it must lie in the vertical plane of symmetry of the fuselage if certain program features such as locating the jets and orienting aerodynamic surfaces are to work properly. For the SBW (Fuselage) Reference System, the positive stationline (X) axis is pointed toward the rear of the airframe, the positive buttline (Y) axis is pointed to the pilot's right, and the positive waterline (Z) axis is pointed toward the top of the airframe. Stationlines, buttlines, and waterlines are defined to be in inches from the origin. This reference system is used only for input data.

4.1.3 Body Reference System

The Body Reference System, a right-handed coordinate system, is the primary reference system in C81. It serves as the reference system in which total rotorcraft forces and moments are summed during both trim and maneuver and is the system for which the stability analysis equations were derived. The origin of the system is defined to be at the rotorcraft cg, which is located by X, Y, and Z coordinates in the Ground Reference System. The axes of the system are oriented with respect to the Ground Reference System by Euler rotations of Ψ, Θ and Φ as discussed previously.

If the Fuselage Reference System is rotated $\pm$ 180 degrees about its Y axis, and its origin moved to the rotorcraft cg, the rotated and translated system is defined to be coincident with the Body Reference System. Hence, the Y axes of both the Fuselage and Body Reference Systems point to the pilot's right, while the Body Reference X axis points toward the nose and Z axis toward the bottom of the rotorcraft.

As with the Fuselage Reference System, the Body Reference System is fixed with respect to the structure of the rigid body rotorcraft. During trim, the system may rotate with respect to the Ground Reference System and during maneuvers it may translate as well. The relationships between the Ground, Fuselage, and Body Reference Systems are shown in Figure 4-1. If the cg location is recomputed prior to trim or during maneuver because of store input or drop(s), the origin of the Body Reference System moves to the new cg location. Moment arms from the cg to the rotor hubs, wing, etc., are recomputed each time the cg moves.

4.1.4 Aerodynamic Surface Reference System

Each wing panel and each of the four stabilizing surfaces uses a separate Aerodynamic Surface Reference System to define the orientation of that surface's axis of incidence change and the incidence angle. Each system is a right-handed coordinate system with its origin at the center of pressure of the appropriate surface. The orientation of each system is defined with respect to the body axis by two ordered rotations:

(1) Γ: a positive rotation about the body X axis; a dihedral angle rotation, and

(2) i: a positive rotation about the Y axis which has been rotated through Γ previously; an incidence rotation.

Dihedral angle, Γ, is always defined to be positive in the direction which displaces the outboard tip of a surface upward with respect to a Fuselage Reference X - Y plane. That is, for a surface whose center of pressure is on or to the left of the fuselage plane of symmetry (Buttline $\leq$ 0), positive dihedral is a right-handed rotation about the body Y axis. If the center of pressure is to the right (Buttline $>$ 0), positive dihedral angle is a left-handed rotation. The implications of these definitions are that horizontal stabilizing surfaces with dihedral or anhedral should be modeled as two separate surfaces and that a vertical fin with sweepback and its center of pressure at or to the left of Buttline 0.0 should be considered to have a +90-degree dihedral angle.

Positive incidence angle is always defined as a right-handed rotation about the Y axis of the aerodynamic reference system. Hence, the Y axis and the axis of incidence change are coincident. The relationship of the Body and Aerodynamic Surface Reference Systems is shown in Figure 4-2.

The orientation of the Y axis and the origin of each system are fixed with respect to the Body Reference System during all trims and maneuvers, but the control linkages can rotate each system about its Y axis.

4.1.5 Rotor Shaft Reference Systems

The program uses two independent Rotor Shaft Reference Systems: one for Rotor 1 and one for Rotor 2. The origin of each system is at the shaft pivot point of its respective rotor, and, as noted earlier, the Rotor 1 Shaft Reference System is a right-handed coordinate system while the Rotor 2 system is left-handed. Each system is oriented with respect to the Body Reference System by the following two ordered rotations: F/A mast tilt angle and lateral mast tilt angle.

The most convenient means of describing the positive directions of the rotations is to say that positive mast tilt angles will tilt the rotor shaft forward and then to the right for both rotors. Hence, if all four mast angles are zero, the X and Z axes of both Shaft Reference Systems and the

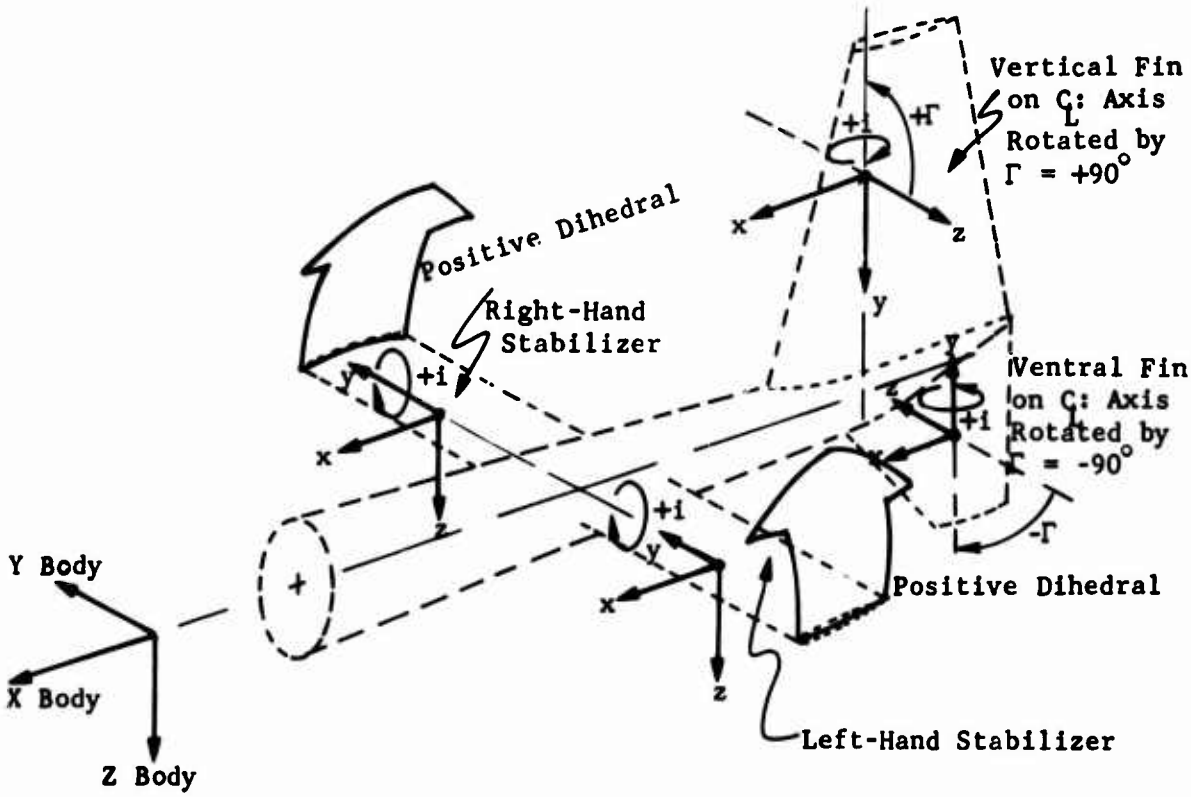

SURFACE	WING AND HORIZONTAL STABILIZERS		VERTICAL AND VENTRAL FINS	
C.P. L cation	Dihedral: Γ	Incidence	Dihedral: Γ	Incidence
Buttline > 0 (Rt of ℄)	< + 90 > - 90	+ L.E. UP + L.E. UP	+90 -90	+ L.E. Left + L.E. Right
Buttline ≤ 0 (ON or LT of ℄)	< + 90 > - 90	+ L.E. UP + L.E. UP	+90 -90	+ L.E. Right + L.E. Left

Figure 4-2. Relationship of Body and Aerodynamic Surface Reference Systems.

Body Reference System are parallel and point in the same direction. However, the Y axis of the Rotor 2 Shaft Reference System points in the opposite direction of the other two Y axes. The origins of both Shaft Reference Systems are fixed with respect to the Body Reference System during both trim and maneuver. The orientation is fixed during trim, but the F/A mast tilt angle can be changed during the maneuver, which does reorient the system.

Note that if the F/A mast tilt angle changes in maneuver, and the lateral mast tilt is nonzero, the F/A rotation will in effect be about the Body Reference Y axis, not the Shaft Reference Y axis. That is, at each time point the orientation is determined by the two ordered rotations from the Body Reference System, not by one rotation from the initial Shaft Reference orientation. Figure 4-3 shows the relationship of the two Shaft Reference Systems to the Body Reference System.

4.1.6 Rotor Analysis Reference Systems

The program uses two independent Rotor Analysis Reference Systems: The system for Rotor 1 is oriented with respect to the Rotor 1 Shaft Reference System and the system for Rotor 2 with respect to the Rotor 2 Shaft Reference System. The origin of each system is located at the hub of its respective rotor, i.e., the Rotor Shaft Reference X and Y coordinates of the origin of the Rotor Analysis System are zero and the Z coordinate is the negative of the mast length. The Analysis Reference Systems are oriented with respect to the Shaft Reference System by a single rotation about the Shaft Reference Z axis. This angle is the rigid body azimuth angle of the blade being analyzed. Hence, the Analysis Reference Systems are rotating reference systems with respect to the Shaft and Body Reference Systems. For Rotor 1 the right-handed rotation vector points up (negative Z direction) and for Rotor 2 the left-handed rotation vector points up (negative Z direction). Figure 4-4 shows the relationship of the Rotor Analysis Reference Systems to the Rotor Shaft Reference Systems.

4.1.7 Wind Reference Systems

All aerodynamic coefficients are computed in the Wind Reference System. By definition, a Wind Reference System only has a velocity component along its X axis; the Y and Z velocities are identically zero. Since the local flow at each rotorcraft component on which aerodynamic forces and moment act is normally not parallel to the flight path velocity vector, separate reference systems are defined for each component. The origin of each of the Local Wind Reference Systems is at the center of pressure or aerodynamic data reference point of each component. Each system is oriented with respect to the corresponding component system (e.g., Body, Aerodynamic Surface, and Shaft Reference Systems) by one of two possible sets of two ordered rotations. The first set of possible angles corresponds to angles commonly measured in flight test:

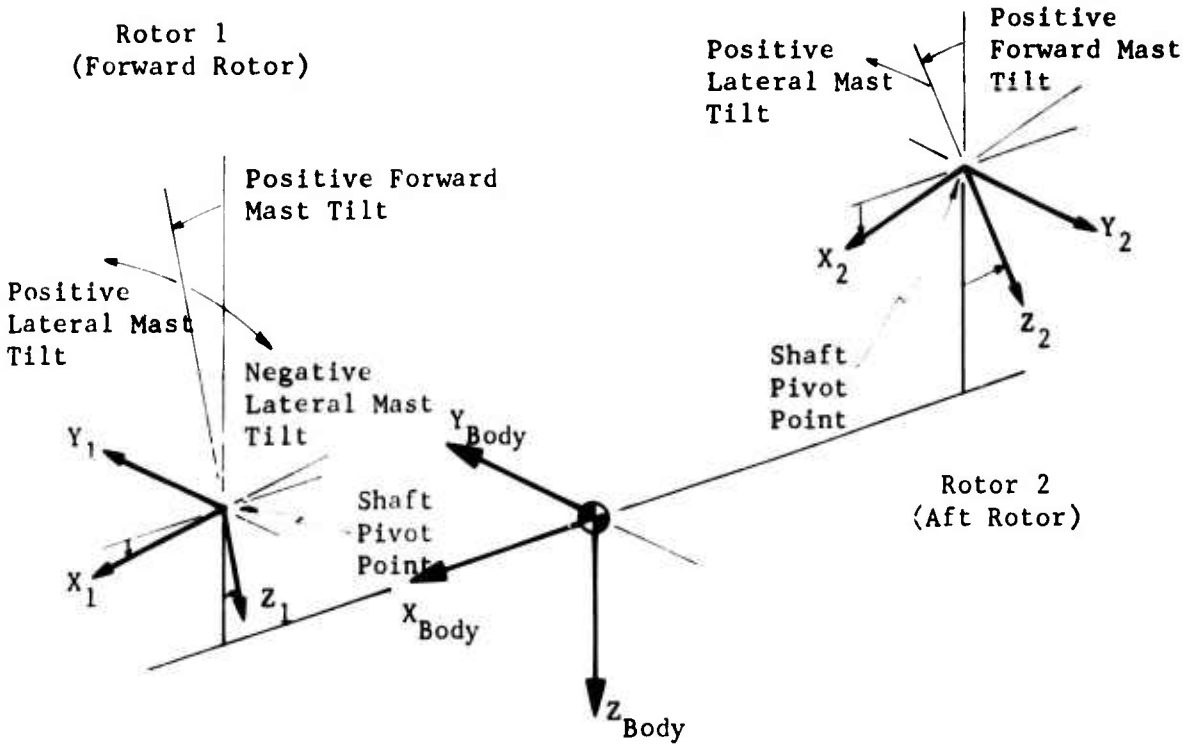

(a) Tandem-Rotor Configuration.

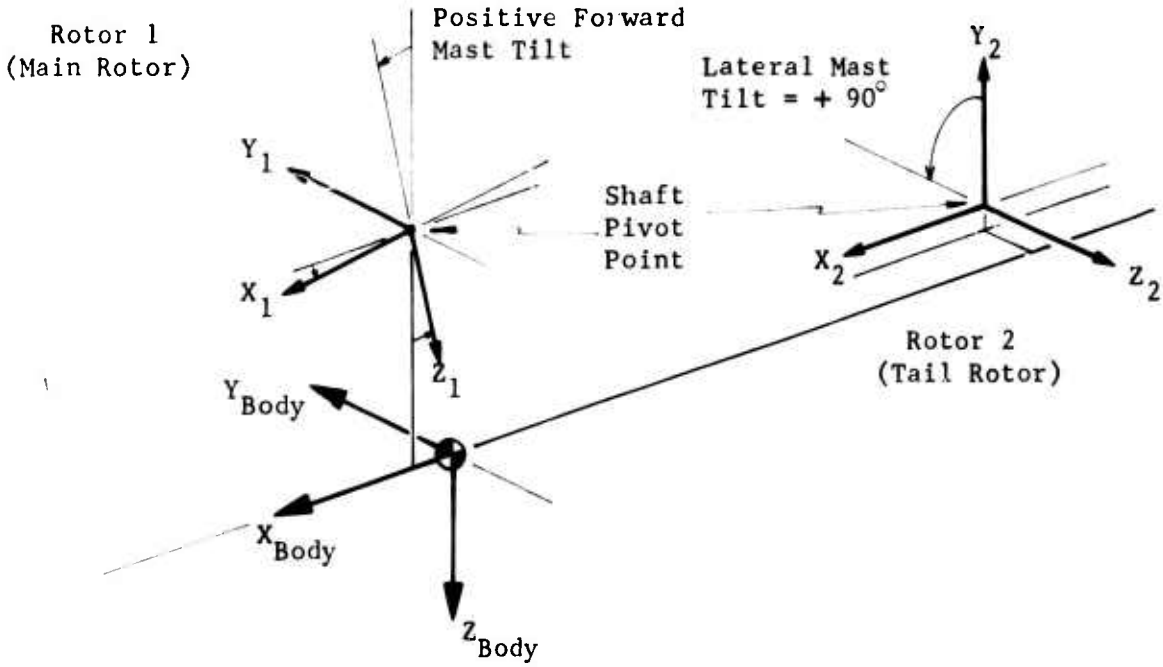

(b) Single-Main-Rotor Configuration.

Figure 4-3. Relationship of Body and Shaft Reference Systems.

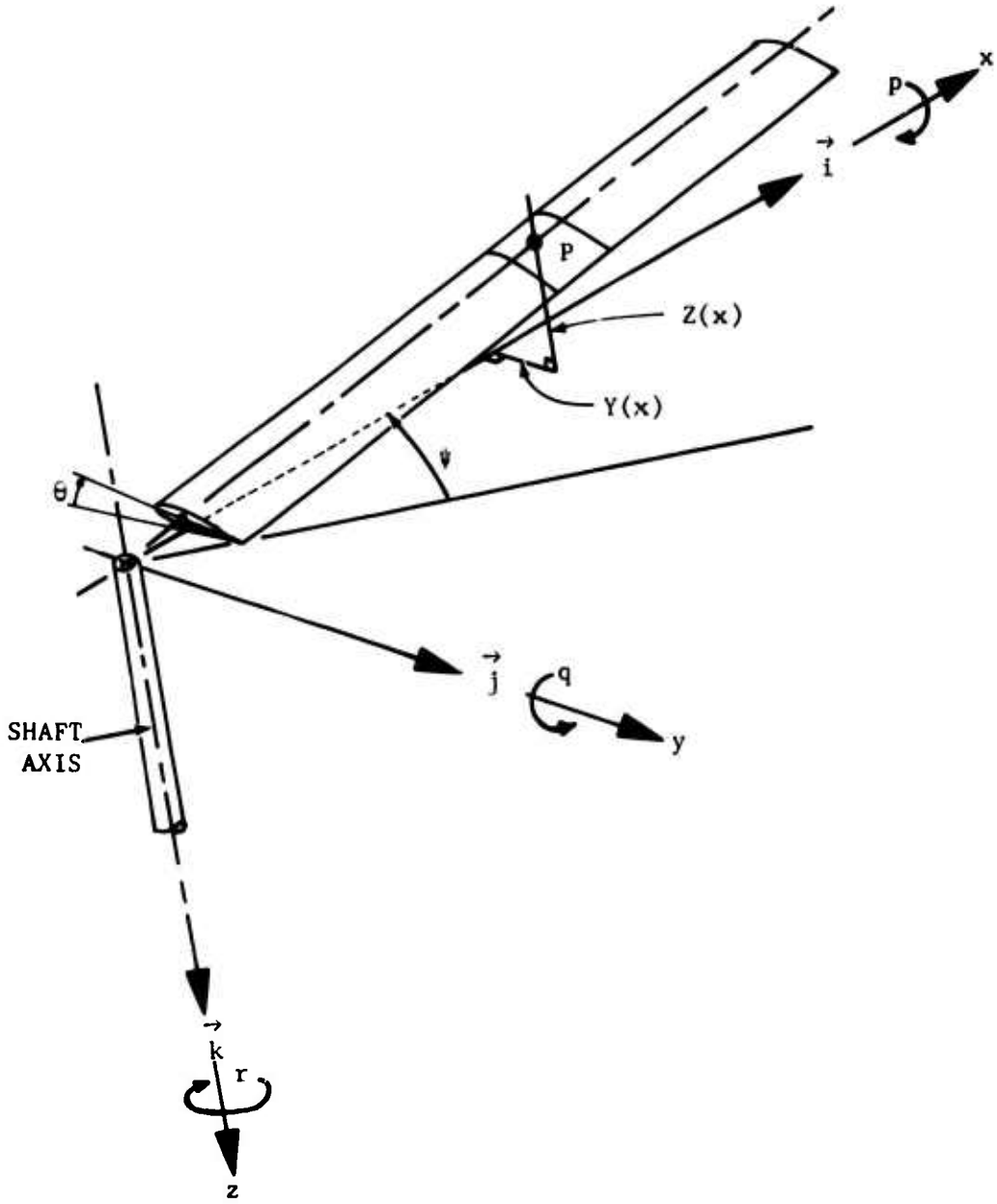

Figure 4 4. Reference System for Rotor Analysis.

(1) Negative Beta ($-\beta$): a rotation (equal to the negative of the sideslip angle β) about the component Z axis, and

(2) Negative Alpha ($-\alpha$): a rotation (equal to the negative of the angle of attack α) about the component Y axis which has been rotated through $-\beta$ previously, where $\alpha = \alpha_{wind}$.

The second set corresponds to angles commonly measured in wind tunnel tests and is a set of inverse Euler angles with roll deleted:

(1) Negative Aerodynamic Pitch Angle ($-\theta_w$): a rotation (equal to the negative of θ_w) about the component Y axis, and

(2) Negative Aerodynamic Yaw Angle ($-\psi_w$): a rotation (equal to the negative of ψ_w) about the Z axis which has been rotated through $-\theta_w$ previously.

Each of these four angles is defined by trigonometric functions of X, Y, and Z velocities in the component reference system. Actually, the definitions of α_{wind} and θ_w are identical, and the two angles can be used interchangeably. However, β and ψ_w are not identical. See Figure 4-5 and Section 4.2.3.2 for the definitions of these angles.

Orientation of a Wind Reference System with respect to Ground Reference only is meaningless and cannot be defined. The orientation of the wind vector, and hence the X axis of a Wind Reference System, can be defined by two Euler type angles, i.e., azimuth (yaw) and elevation (pitch). However, the orientation of the Y and Z axes about the X cannot be defined without referring to one of the rotorcraft component reference systems. This situation does not limit any analysis or computation since the point of interest is the action of the air mass on a component, not the ground.

4.2 SIGN CONVENTIONS

The sign conventions of the most commonly used rotor related parameters are summarized in Table 4-2. The conventions listed are for the condition where both rotor shafts are vertical (i.e., a tandem or side-by-side rotor helicopter) and are stated in terms of pilot reference. For nonvertical shaft(s) the rotor related sign conventions remain unchanged with respect to the Rotor Shaft Reference System. Table 4-3 gives the rotor designation and sign conventions for four standard rotorcraft configurations.

Additional discussion of some of these rotor related parameters and parameters mentioned in Section 4.1 is included below.

4.2.1 Rotor Flapping and Elastic Displacements

Rotor flapping can be defined with respect to either the Rotor Analysis or Shaft Reference System of the appropriate rotor. Shaft reference

B = Body
W = Wind

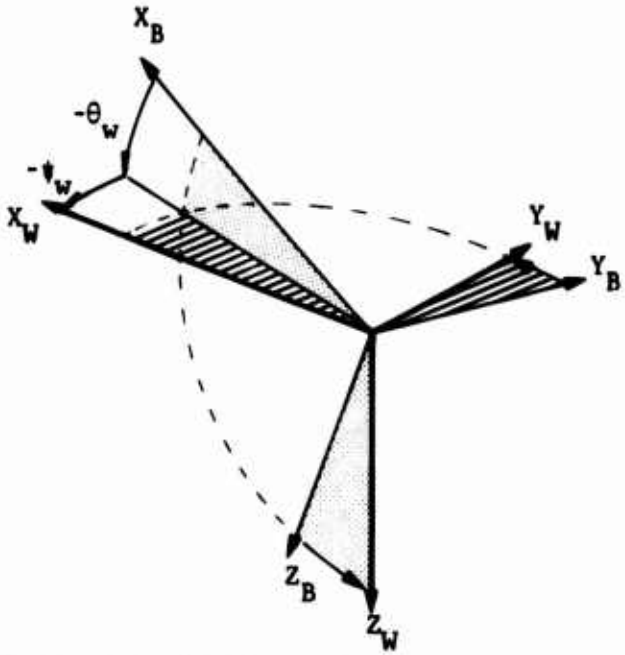

(a) Rotations With Wind Tunnel Angles.

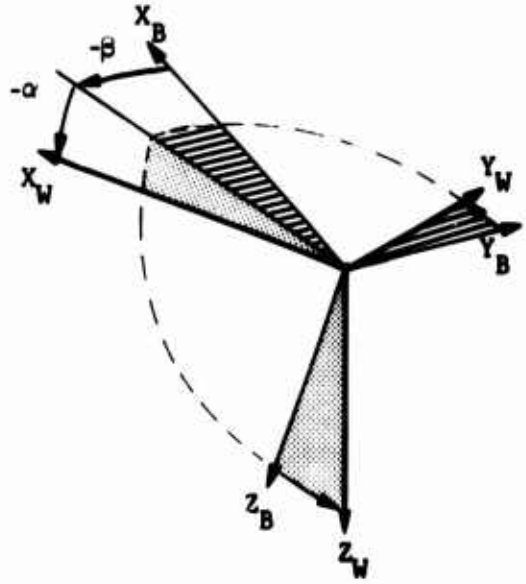

(b) Rotations With Flight Test Angles.

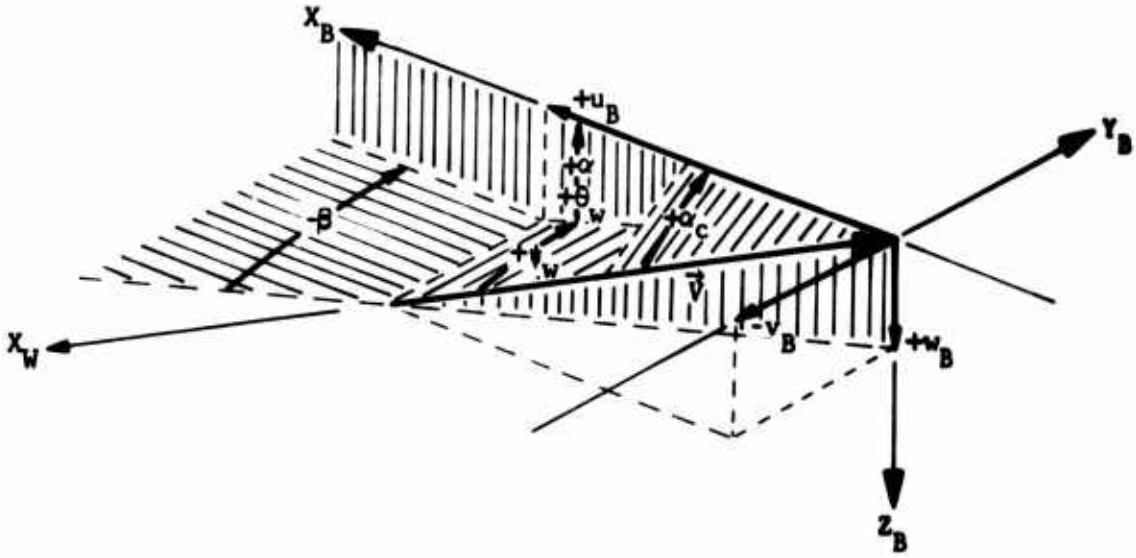

(c) Planes in Which Angles Are Measured.

Figure 4-5. Relationship of Wind and Body (Component) Reference Systems.

TABLE 4-2. SIGN CONVENTIONS FOR ROTOR RELATED PARAMETERS		
PARAMETER	POSITIVE DIRECTION OF PARAMETER ROTOR 1	ROTOR 2
Shaft Reference System (origin at shaft pivot point)		
X-Axis	Forward	Forward
Y-Axis	Right	Left
Z-Axis	Down	Down
Mast Tilt Angle		
F/A $(\beta_m)_F$	Forward	Forward
Lateral $(\beta_m)_L$	Right	Right
Swashplate Angles		
F/A (B_1)	Forward	Forward
Lateral (A_1)	Down right	Down right
Control Phasing Angle (γ) (measured from the projection on the swashplate of the pitch link attach point to the pitch horn)	In same direction as blade rotation	In same direction as blade rotation
Pylon Motions		
F/A (a_F)	Forward	Forward
Lateral (a_L)	Right	Left
Direction of Rotor Rotation (as viewed from above)	Counterclockwise (right-handed rotation vector up)	Clockwise (left-handed rotation vector up)
Pitch-Flap Coupling Angle (δ_3) (measured from 90° ahead of blade feathering axis)	Opposite to direction of blade rotation	Opposite to direction of blade rotation
Shaft Axis Flapping		
F/A (a_1)	Aft	Aft
Lateral (b_1)	Down right	Down left
Blade Rigid-Body Displacements		
Flapping (β)	Up	Up
Twist, Collective Pitch, and Feathering $(\theta_0, \theta_1$, and θ_f	Blade leading edge up	Blade leading edge up
Blade Elastic Displacements		
Out-of-plane	Up	Up
Inplane	Opposite to direction of blade rotation	Opposite to direction of blade rotation
Torsion	Blade leading edge up	Blade leading edge up

TABLE 4-2. (Continued)

PARAMETERS	POSITIVE DIRECTION OF PARAMETER ROTOR 1	ROTOR 2
Rotor Forces		
H-Force (H)	Aft	Aft
Y-Force (Y)	Right	Left
Thrust (T)	Up	Up

Assumptions used in making the above definitions:

(1) Both rotor shafts are vertical with respect to the Fuselage Reference System.

(2) Rotor hub is at or above shaft pivot point and pylon focal points.

(3) The directions are with respect to a forward-facing pilot.

TABLE 4-3. CONVENTIONS FOR SPECIFIC CONFIGURATIONS

	Single-Rotor Helicopter (KONFIG=1)	Tandem-Rotor Helicopter (KONFIG =2)	Prop-Rotor Aircraft (Helicopter Mode) (KONFIG=3)	Prop-Rotor Aircraft (Airplane Mode) (KONFIG=3)
Rotor 1				
Designation	MAIN	FORWARD	RIGHT	RIGHT
Thrust	Up	Up	Up	Forward
H-Force	Aft	Aft	Aft	Up
Y-Force	Right	Right	Right	Right
Rotor 2				
Designation	TAIL	AFT	LEFT	LEFT
Thrust	Right	Up	Up	Forward
H-Force	Aft	Aft	Aft	Up
Y-Force	*	Right	Right	Right

Directions noted are with respect to a forward-facing pilot

* Tail rotor Y-Force: + Up for + 90° lateral mast tilt
+ Down for -90° lateral mast tilt

For tail rotor lateral mast tilt of

+ 90°: the blade above the rotor hub rotates toward the front of the helicopter.

- 90°: the blade above the rotor hub rotates toward the rear of the helicopter.

flapping is divided into an F/A and a lateral component. Analysis reference system flapping (instantaneous value of flapping) is based on the out-of-plane displacement of the blade tip for the first mode (rigid body mode) of the rotor at a particular azimuth angle. If coning is neglected,

$$\beta(\psi) = -a_1 \cos \psi - b_1 \sin \psi$$

where

a_1 = F/A flapping angle (shaft reference)

b_1 = lateral flapping angle (shaft reference)

ψ = blade azimuth location

β = instantaneous value of flapping

The shaft reference flapping angles define the orientation of the rigid body tip path plane. However, they are not ordered rotations. The angles a_1 and b_1 are independent positive rotations about the Shaft Reference Y and X axes respectively as shown in Figure 4-6. Note that for Rotor 1 this means right-handed rotations about the right-handed coordinate system, while for Rotor 2 it means left-handed rotations about a left-handed system. Based on these definitions for a_1 and b_1, positive β (equivalent to positive out-of-plane displacement) is up the shaft (the negative Z direction).

When using the quasi-static rotor analysis, the rotor equations are solved in terms of a_1 and b_1. From these values, β can be calculated for any azimuth. However, when the time-variant rotor analysis is used, the value of β, not a_1 and b_1, is solved for at each azimuth location. Hence, with only a single azimuth location, a_1 and b_1 cannot be defined. In this case, the values of a_1 and b_1 are calculated from value of β at the last two azimuth locations, i.e., solution of two equations in two unknowns.

Positive inplane displacements of a point on a blade indicate the blade is lagging behind the rigid body feathering axis. That is, the usual positive drag force produces a positive inplane displacement.

A positive torsional displacement twists the blade leading edge up with respect to a vertical shaft. This is the same direction as positive geometric twist, collective pitch, and cyclic feathering.

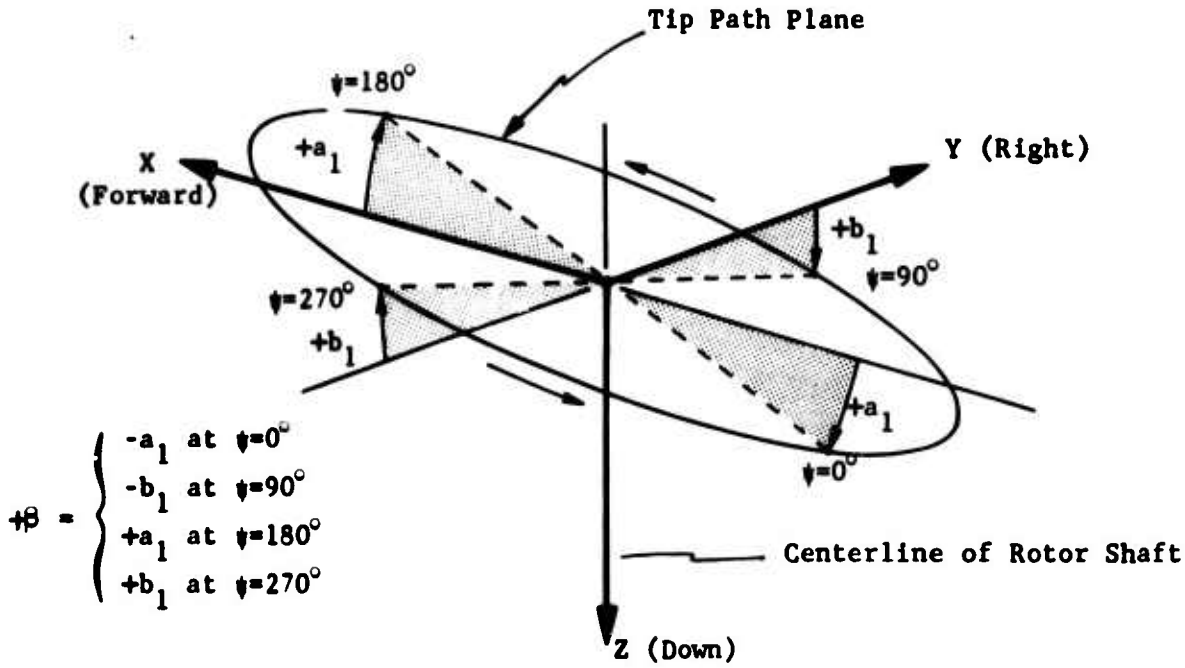

(a) Shaft Axis Flapping for Rotor 1

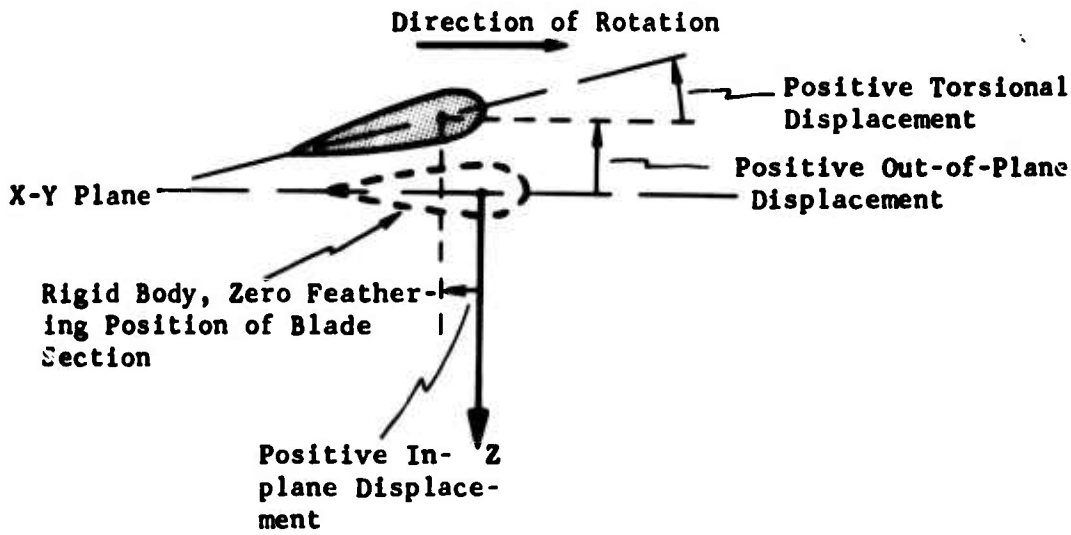

(b) Elastic Displacements

Figure 4-6. Blade Flapping and Elastic Displacement.

4.2.2 Control Positions

4.2.2.1 Position in Percent or Inches

4.2.2.1.1 Collective Stick

Zero percent collective stick is full down. Positive stick motion in percent or inches is upward.

4.2.2.1.2 Fore and Aft Cyclic Stick

Zero percent fore and aft cyclic stick is full aft. Positive stick motion in percent or inches is forward.

4.2.2.1.3 Lateral Cyclic Stick

Zero percent lateral cyclic stick is full left. Positive stick motion in percent or inches is to the right.

4.2.2.1.4 Pedals

Zero percent pedal is full right. Positive pedal motion in percent or inches is to the left. That is, positive pedal tends to make the rotorcraft yaw nose left.

4.2.2.2 Positions in Radians or Degrees

When control positions are expressed in radians or degrees, these values correspond to the control angles computed from the basic rigging equations (see Table 3-11 in Section 3). Hence, they are the control angles without nonlinearities and control mixing. These units appear most frequently in the partial derivative matrix printed during trim iterations.

4.2.3 Miscellaneous Quantities

4.2.3.1 Climb and Heading Angles

The climb angle is the angle of the flight path relative to the X-Y plane in ground reference. It is positive if the rotorcraft is climbing. The heading angle is the direction of the flight path on the compass. Zero heading is due north, along the ground reference X axis. A heading of 90 degrees is due east.

4.2.3.2. Aerodynamic Angles

The local wind reference systems are oriented with respect to the Body, Rotor Shaft, or Aerodynamic Surface Reference Systems by what are referred to as aerodynamic angles (see Section 4.1.7). These angles are based on the components of velocity including gusts along the X, Y, and Z axes of the appropriate reference system.

Pitch Angle of Attack, $\theta_w = \alpha_{wind} = \tan^{-1}\left(\frac{\text{Z velocity}}{\text{X velocity}}\right) = \tan^{-1}\left(\frac{w}{u}\right)$

if $u = w = 0$, $\theta_w = 0$ by definition

Yaw Angle of Attack (or Aerodynamic Yaw Angle) = ψ_w

$$= \sin^{-1}\left(\frac{\text{-Y velocity}}{\text{Total velocity}}\right) = \sin^{-1}\left(\frac{-v}{V}\right)$$

if $V = 0$, $\psi_w = 0$ by definition

Angle of Sideslip = $\beta = \tan^{-1}\left(\frac{\text{Y velocity}}{\text{X velocity}}\right) = \tan^{-1}\left(\frac{v}{u}\right)$

4.2.3.3 Gust Velocities

All gusts are defined with respect to the Body Reference System as follows:

(1) The forward component of gust velocity is positive if the gust is moving in the positive X direction.

(2) The lateral component of gust velocity is positive if the gust is moving in the positive Y direction.

(3) The vertical component of gust velocity is positive if the gust is moving in the positive Z direction.

4.2.3.4 Acceleration Levels in G

The acceleration levels in units of g are defined with respect to the Body Reference System as follows:

(1) Forward acceleration is positive in the positive X direction.

(2) Positive lateral g level is to the pilot's left, in the negative Y direction.

(3) Positive vertical g level is upward, in the negative Z direction. For straight and level flight, the vertical g level is 1.00.

4.3 OUTPUT GROUPS FOR INPUT DATA

4.3.1 Data Deck Listing (Figures 4-7 and 4-8)

Following the printout of the computer operating system information (JCL cards, run time, etc.), the message on the first card of the data deck, CARD 00, is printed six times on one page. This message is intended to instruct the computing control section as to the disposition of the printed output and card deck. After printing CARD 00, the program lists the entire card deck which was submitted. This is strictly a listing of the cards; it is without regard to any illegal characters, input format errors, or program logic. This listing can be useful in locating input data errors which may be found in the following output groups.

4.3.2 Input Data Printout

4.3.2.1 Problem Identification (Figure 4-9)

The value of the primary control variable, NPART, the problem identification number, IPSN, and the three cards of comments (CARDS 02, 03, and 04) appear at the beginning of each problem.

4.3.2.2 Basic Input Data Groups

All basic groups of input data except the aeroelastic blade data blocks, airfoil data tables and the rotor-induced velocity distribution table are printed in the same sequence in which they are input. The data for each of these basic groups are printed whether the group is input on cards or called from the data library. If a group is called from library and altered by an &CHANGE card, the &CHANGE card is listed and the group is updated with the specified changes. However, during parameter sweeps (NPART = 10), the inputs in the groups are changed, and the &CHANGE card is not printed out. The user should refer to the Data Deck Listing to verify which inputs were changed in such sweeps.

4.3.3 Aeroelastic Blade Data

If aeroelastic blade data blocks are input, the sets of data within each block are printed in the order of input with the main rotor block followed by the tail rotor block. All distributions are in the sequence of most inboard blade station (No. 0 or 1) to the tip station (No. 20). The printout of the weight and beamwise and chordwise inertias is followed by the total weight, tip weight, and flapping inertia of each blade.

The printout of the mode shapes is followed by a number of constants, some internally calculated, which are related to the elastic rotor modes. The mode type, damping ratio, and natural frequency for each mode are printed as input. The generalized inertia and the bending moment and shear coefficients are calculated data based on the input frequencies, mode shapes, and inertial distributions as explained in Volume I of this report.

```
*** AGAJ73 ***    RETURN TO JOHN M. DAVIS    S&C  GROUP 20    AGAJ73  00

*** AGAJ73 ***    RETURN TO JOHN M. DAVIS    S&C  GROUP 20    AGAJ73  00

*** AGAJ73 ***    RETURN TO JOHN M. DAVIS    S&C  GROUP 20    AGAJ73  00

*** AGAJ73 ***    RETURN TO JOHN M. DAVIS    S&C  GROUP 20    AGAJ73  00

*** AGAJ73 ***    RETURN TO JOHN M. DAVIS    S&C  GROUP 20    AGAJ73  00

*** AGAJ73 ***    RETURN TO JOHN M. DAVIS    S&C  GROUP 20    AGAJ73  00
```

Figure 4-7. Message Card.

```
 2   3                                                                    AGAJ73  01
          MODEL 209  AH-1G  HUEYCOBRA WITH 4 M200A1 RKT LAUNCHERS         AGAJ73  02
 19 RKTS EACH INBOARD STORE; 14 RKTS EACH OUTBOARD STORE                  AGAJ73  03
 V = 100 KTAS   ASYMMETRIC STORE DROP OF OUTBOARD POD      SLS            AGAJ73  04
          MODEL 209 PROGRAM LOGIC GROUP                                   AGAJ73  05
   0    1    5    0    0    2    0    0   -1    3    0    4    0    1AGAJ73  06
   0    0    0    1    2    0    0    1    0    0    1    1    0     AGAJ73  07
   0    0    0    0    0    0                                   0    0AGAJ73  08
CLCD5402  MODEL 209 M/R AIRFOIL DATA TABLE                            AGAJ73  11
          MODEL 209 AEROELASTIC BLADE DATA BLOCK (MODE5402)           AGAJ73  16
   4.4370    6.0600    7.2400    2.1200    0.9520    0.7610    0.678        16/A1
   0.6510    0.6110    0.5770    0.5410    0.6900    1.1800    1.180        16/A2
   0.7800    0.5010    0.5010    0.5040    1.6660    2.2640    0.0          16/A3
   0.0040    0.0040    0.0040    0.0040    0.0020    0.0020    0.0010       16/B1
   0.0010    0.0010    0.0010    0.0010    0.0010    0.0020    0.0020       16/B2
   0.0010    0.0010    0.0010    0.0010    0.0010    0.0010    0.0          16/B3
   0.1685    0.1686    0.1687    0.1682    0.1553    0.1065    0.0964       16/C1
   0.0885    0.0825    0.0836    0.0936    0.0840    0.0782    0.0778ARSJ01  2G
   0.0718    0.0672    0.0673    0.0674    0.0660    0.0660   -1.0000       16/C3
   0.0000    0.0001    0.0       0.0500    0.0000    0.0                    16/D1
   0.1001    0.0000    0.0       0.1501    0.0000    0.0            2
   0.2001   -0.0000    0.0       0.2501   -0.0000    0.0            3
   0.3001   -0.0001    0.0       0.3501   -0.0001    0.0            4
   0.4001   -0.0001    0.0       0.4501   -0.0002    0.0            5
   0.5001   -0.0002    0.0       0.5501   -0.0003    0.0            6
   0.6001   -0.0003    0.0       0.6501   -0.0004    0.0            7
   0.7001   -0.0005    0.0       0.7501   -0.0005    0.0            8
   0.8001   -0.0006    0.0       0.8500   -0.0006    0.0            9
   0.9000   -0.0007    0.0       0.9500   -0.0007    0.0           10
   1.0000   -0.0008    0.0       0.9999   -1.0000    0.0           11
     308.      308.     340.      340.        5.       16.  15. 324.        12
   0.0000   -0.0996    0.2043   -0.0331   -0.0968    0.2983         1
  -0.0722   -0.0858    0.2689   -0.1126   -0.0637    0.2967         2
  -0.1487   -0.0337    0.3070   -0.1714    0.0028    0.3171         3
  -0.1783    0.0465    0.3250   -0.1728    0.0964    0.3301         4
  -0.1589    0.1513    0.3327   -0.1400    0.2101    0.3332         5
  -0.1181    0.2723    0.3318   -0.0943    0.3373    0.3289         6
  -0.0692    0.4049    0.3250   -0.0432    0.4747    0.3203         7
  -0.0164    0.5444    0.3121    0.0130    0.6197    0.3027         8
   0.0384    0.6944    0.2960    0.0658    0.7701    0.2922         9
   0.0932    0.8465    0.2921    0.1204    0.9232    0.2939        10
   0.1477    1.0000    0.2945    1.5766   -1.0000    0.0200        11
     537.      464.      550.      485.        5.       16.  15. 324.        12
   0.0000    0.0565   13.8177   -0.1449    0.0541   15.7891         1
  -0.2549    0.0450   17.6495   -0.3592    0.0266   19.3734         2
  -0.4569    0.0027   20.1302   -0.5509   -0.0225   21.1089         3
  -0.6287   -0.0481   22.2234   -0.6880   -0.0730   23.4023         4
  -0.7265   -0.0968   24.5994   -0.7427   -0.1191   25.8408         5
            [illegible]  27.1249   -0.6988   -0.1575   28.4267         6
            [illegible]  [illegible]302   -0.5292   -0.1839   30.5872         7
            [illegible]  [illegible]2180   -0.1963   32.3012
```

Figure 4-8. Partial Printout of Data Deck Listing.

BELL HELICOPTER COMPANY ROTORCRAFT FLIGHT SIMULATION PROGRAM AGA373 COMPUTED 12/08/73

MODEL 209 AH-1G HUEYCOBRA WITH 4 M200A1 RKT LAUNCHERS.
19 RKTS EACH INBOARD STORE; 14 RKTS EACH OUTBOARD STORE
V = 100 KTAS ASYMMETRIC STORE DROP OF OUTBOARD PUD SLS

INPUT DATA

MODEL 209 PROGRAM LOGIC GROUP

PROGRAM LOGIC GROUP

0	1	5	0	0	2	0	0	-1	3	0	4	0	1
0	0	0	1	2	0	0	0	0	0	1	1	0	0
0	0	0	0	0	0	0	0	0	0	0	0	0	0

CLCD5402 J.R.VAN GAASBEEK (11-26-73)
CLCD TABL S FOR 540 ROTOR, CM TABLE FOR 0012

MODEL 209 AEROELASTIC BLADE DATA BLOCK (MODE54C2)

MODEL 209 FUSELAGE GROUP

FUSELAGE GROUP

7000.000	200.0000	0.0	54.00000	193.0000	0.0	75.00000
2350.000	1260.00	10500.00	1020.000	0.0	0.0	0.0
-4.113799	0.0	0.0	0.0	0.0	0.0	-0.1649200E-01
0.1794500E-01	0.2739770	-0.1903000E-02	0.7109998E-03	0.9462597E-02	-0.1530000E-03	0.3050000E-03
5.000000	0.0	156.1000	84.70000	0.0	0.0	-0.2698200E-01
0.4341300E-01	-0.7022095E-01	-0.1970000E-03	0.5780000E-03	0.1266100E-01	0.1000000E-04	0.6599999E-04
-6.926630	0.0	0.0	0.0	300.0000	0.0	0.4369170
-0.7697695E-01	4.349087	0.1390000E-01	-0.6010000E-02	-0.5651300E-01	0.1731000E-02	-0.3101000E-02
0.0	11.76000	45.00000	0.3995540	0.4357100E-01	0.4109999E-03	-0.3699999E-04
1.633453	0.4149800E-01	0.2351000E-02	-0.3571000E-02	-0.2769998E-03	0.2914000E-02	-0.4799999E-04
0.0	-140.0000	45.00000	0.5549397E-02	-0.2209679	-0.1399700E-01	0.6119999E-03
-3.310500	-0.4880000E-01	-0.4260000E-02	0.3011000E-02	-0.8599999E-04	-0.4042000E-02	-0.2020000E-03
600.0000	0.0	0.0	-0.757113	0.6935799E-01	0.9264000E-02	-0.1040000E-02
15.94162	0.1254000E-02	-0.3040000E-02	0.1731300E-01	0.2510000E-02	-0.3025000E-02	-0.1040000E-03

MODEL 209 ROTOR AERODYNAMICS GROUP

RTR AERODYNAMIC GROUP

0.8500000	1.270000	1.299999	-0.7000000	0.0	0.0	0.7000000
0.9999997E-01	0.0	0.4750000E-01	0.0	0.9999998E-02	0.0	0.3000000E-04
0.4000000E-01	0.3400000	0.9799999E-01	1.000000	0.0	0.2000000	1.000000
0.0	0.0	0.0	0.0	0.0	0.0	60.00000
0.0	0.0	0.0	0.0	0.0	0.0	0.0
0.8500000	1.270000	1.299999	-0.7000000	0.0	0.0	0.7000000
0.9999997E-01	0.0	0.4750000E-01	0.0	0.9999998E-02	0.0	0.3000000E-04
0.4000000E-01	0.3400000	0.8999997E-01	0.0	0.0	0.0	0.0
0.0	0.0	0.0	0.0	0.0	0.0	60.00000
0.0	0.0	0.0	0.0	0.0	0.0	0.0

Figure 4-9. Problem Identification and Basic Input Data Group.

MODEL 209 MAIN ROTOR GROUP

MAIN ROTOR GROUP

2.000000	0.0	0.0	22.00000	27.00000	-10.00000	12.00000
203.0000	0.0	152.6200	447.5999	1411.800	0.4910000E-01	0.0
15.00000	0.0	10000.00	0.0	0.9700000	0.0	2.000000
2.750000	0.0	0.0	0.1500000	0.0	0.0	0.0
0.0	0.0	0.0	0.0	0.0	0.0	0.0
0.0	203.0000	0.0	152.6000	3.500000	0.0	0.0
0.0	0.0	0.0	0.0	0.0	0.0	0.0

MODEL 209 TAIL ROTOR GROUP

TAIL ROTOR GROUP

2.000000	0.0	0.0	4.250000	8.410000	0.0	11.00000
520.7000	-14.85000	118.2700	14.96000	1.398000	0.2510000	0.0
0.0	0.0	10000.00	0.0	0.0	0.0	0.5000000
1.500000	0.0	30.00000	0.1199999	0.0	0.0	0.2000000
0.0	0.0	0.0	0.0	0.0	0.0	0.0
0.0	0.0	0.0	0.0	0.2500000	0.0	0.0
0.0	0.0	90.00000	0.0	0.0	0.0	0.0

MODEL 209 WING GROUP (FIXED SURFACE)

WING GROUP

27.79999	192.0000	39.00000	62.00000	14.00000	3.500000	11.00000
3.910000	0.6670000	0.5870000	2.419999	0.0	9.200000	0.0
0.0	0.0	0.0	0.0	0.0	0.0	0.0
0.0	0.0	0.0	0.0	0.0	0.0	0.0
0.5000000	0.0	0.0	0.0	0.0	0.0	0.0
0.0	0.0	0.0	0.0	0.0	0.0	0.0
0.8400000	1.250000	1.200000	0.0	0.0	0.0	1.099999
0.1070000	0.0	0.5350000E-01	0.0	0.9999998E-02	0.0	0.3330000E-03
0.0	0.2000000	0.0	0.0	0.0	0.0	0.0
-0.2000000E-02	-0.9000000E-02	0.8200000	0.0	0.0	0.0	0.0

MODEL 209 R/H HORIZONTAL STABLIZER

STABILIZER NO. 1 GROUP

7.349999	398.5000	22.06999	56.00000	0.7000000	0.0	14.50000
1.469999	1.367000	0.6600000	0.0	0.0	2.000000	0.0
0.0	0.0	0.0	0.0	0.0	0.0	0.0
0.0	0.0	0.0	0.0	0.0	0.0	0.0
1.500000	0.0	0.0	0.0	0.0	0.0	0.0
0.8400000	1.250000	1.200000	0.0	0.0	0.0	1.200000
0.[illegible]995E-01	0.0	0.4350000E-01	0.0	0.[illegible]9999998E-02	[illegible]	0.3[illegible]83999E-03
0.4[illegible]E-01	0.2000000	0.1500000	0.0	0.3320000E-01	0.[illegible]	0.0
-0.2[illegible]E-02	-0.9000000E-02	0.8200000	0.6999999E-01	0.0	0.0	0.0
0.0	0.0	0.0	0.[illegible]73000	0.1339000	0.0	0.0
0.0	0.0	0.0	0.0	0.0	0.0	0.0

Figure 4-9. Continued.

MODEL 209 L/H HORIZONTAL STABLIZER

STABILIZER NO. 2 GROUP

7.345999	398.5000	-22.06999	56.00000	0.7000000	0.0	14.50000
1.465999	1.367000	0.6600000	0.0	0.0	2.000000	0.0
0.0	0.0	0.0	0.0	0.0	0.0	0.0
0.0	0.0	0.0	0.0	0.0	0.0	0.0
1.500000	0.0	0.0	0.0	0.0	0.0	0.0
0.8400000	1.250000	1.200000	0.0	0.0	0.0	1.200000
0.3659995E-01	0.0	0.4350000E-01	0.0	0.7999998E-02	0.0	0.3283999E-03
0.4000000E-01	0.2000000	0.1500000	0.0	0.3320000E-01	0.0	0.0
-0.2000000E-02	-0.9000000E-02	0.8200000	0.6999999E-01	0.0	0.0	0.0
0.0	0.0	0.0	0.8273000	0.1339000	0.0	0.0
0.0	0.0	0.0	0.0	0.0	0.0	0.0

MODEL 209 VERTICAL STABILIZER

STABILIZER NO. 3 GROUP

18.59999	591.0000	0.0	64.00000	4.500000	90.00000	47.00000
1.559999	0.6670000	0.6400000	0.0	0.9999996E-01	0.0	0.0
0.0	0.0	0.0	0.0	0.0	0.0	0.0
0.0	0.0	0.0	0.0	0.0	0.1799999	0.2000000E-02
0.0	0.0	0.0	0.4000000	-40.00000	-20.00000	0.0
0.8400000	1.250000	1.200000	0.0	0.0	0.0	1.200000
0.5999996E-01	0.0	0.5000000E-01	0.0	0.7999996E-02	0.0	0.1370000E-03
0.4000000E-01	0.2000000	0.1500000	0.0	0.3320000E-01	0.0	0.0
-0.2000000E-02	-0.9000000E-02	0.8200000	-0.5000000E-01	0.0	0.0	0.0
0.0	0.0	0.0	0.0	0.0	0.0	0.0
0.0	0.0	0.0	0.0	0.0	0.0	0.0

MODEL 209 M200A1 19 ROUND ROCKET POD

EXTERNAL STORES GROUP

533.0999	194.9100	60.00000	58.56000	15.00000	0.0	0.5999996E-01
3.559999	40.09999	40.09999	0.0	0.2000000	0.0	0.0
0.0	0.0	1.200000	4.000000	4.000000	0.0	1.599999
674.2000	204.4800	42.50000	57.01499	15.00000	0.0	0.9999996E-01
4.480000	50.64000	50.64000	0.0	0.2000000	0.0	0.0
0.0	0.0	1.200000	4.000000	4.000000	0.0	1.599999
674.2000	204.4800	-42.50000	57.01499	15.00000	0.0	0.5999996E-01
4.480000	50.64000	50.64000	0.0	0.2000000	0.0	0.0
0.0	0.0	1.200000	4.000000	4.000000	0.0	1.599999
533.0999	194.9100	-60.00000	58.56000	15.00000	0.0	0.5999996E-01
3.559999	40.09999	40.09999	0.0	0.2000000	0.0	0.0
0.0	0.0	1.200000	4.000000	4.000000	0.0	1.599999

MODEL 209 CONTROLS GROUP

CONTROLS GROUP

13.00000	8.625000	22.67500	0.0	0.0	0.0	0.0
12.70000	-13.20000	27.00000	0.0	0.0	0.0	0.0
12.00000	-10.80000	17.79999	0.0	0.0	0.0	0.0
6.500000	-6.000000	20.50000	0.0	0.0	0.0	0.0

Figure 4-9. Continued.

MODEL 209 ITERATION LOGIC GROUP

ITERATION GROUP

30.00000	0.0	0.5000000	0.5000000	0.0	0.0	0.0
0.2000000	0.2000000	1500.000	500.0000	1.000000	0.9999996E-01	2000.000
50.00000	50.00000	50.00000	50.00000	50.00000	50.00000	10.00000

FLIGHT CONSTANTS GROUP

100.0000	0.0	0.0	1000.000	0.0	-3.823999	-0.7740000
19.89000	54.95000	53.95000	34.12997	0.0	0.0	0.0
0.5500000	-0.2750000	1.757000	0.1200000E-01	9377.359	277.1799	0.0
0.0	0.0	2000.000	6000.000	0.0	0.0	0.0

MODEL 209 BOBWEIGHT GROUP (NO BOBWEIGHT)

BOBWEIGHT GROUP

0.0	0.0	0.0	0.0	0.0	0.0	0.0

MODEL 209 WEAPONS GROUP (NO WEAPON)

WEAPON GROUP

0.0	0.0	0.0	0.0	0.0	0.0	0.0

MODEL 209 STABILITY AND CONTROL AUGMENTATION SYSTEM

SCAS GROUP

0.9399999E-02	100.0000	0.2800000	2.760000	1.000000	0.7999998E-01	12.00000
0.2720000	4.450000	1.349999	2.400000	2.299999	0.7999996E-01	10.00000
0.1090000E-01	27.20000	0.3000000	1.849999	1.700000	0.5000000E-01	5.299999
12.50000	12.50000	12.50000	100.0000	100.0000	100.0000	0.0

MODEL 209 STABILITY ANALYSIS TIMES GROUP

STAB TIMES GROUP

9999.000	0.0	0.0	0.0	0.0	0.0	0.0
0.0	0.0	0.0	0.0	0.0	0.0	0.0

MODEL 209 AIRLOADS PRINTOUT GROUP

AIRLOAD TIMES GROUP

9999.000	0.0	0.0	0.0	0.0	0.0	0.0
0.0	0.0	0.0	0.0	0.0	0.0	0.0

Figure 4-9. Concluded.

MAIN ROTOR AEROELASTIC BLADE DISTRIBUTIONS AND DATA

BLADE STATION NUMBER	WEIGHT (LB/IN)	BEAMWISE INERTIA (IN-LB-SEC**2/IN)	CHORDWISE INERTIA (IN-LB-SEC**2/IN)
1	4.4370	0.0040	0.1685
2	6.3600	0.0040	0.1685
3	7.2400	0.0040	0.1687
4	2.1200	0.0040	0.1692
5	0.9520	0.0020	0.1553
6	0.7610	0.0020	0.1065
7	0.6780	0.0010	0.0964
8	0.6510	0.0010	0.0885
9	0.6110	0.0010	0.0825
10	0.5770	0.0010	0.0836
11	0.5410	0.0010	0.0936
12	0.6900	0.0010	0.0840
13	1.1800	0.0020	0.0782
14	1.1900	0.0020	0.0778
15	0.7800	0.0010	0.0718
16	0.5010	0.0010	0.0672
17	0.5010	0.0010	0.0673
18	0.5040	0.0010	0.0674
19	1.6660	0.0010	0.0660
20	2.2640	0.0010	0.0660

TOTAL BLADE WEIGHT = 446.98 LB BLADE TIP WEIGHT = 0.0 LB FLAPPING INERTIA/BLADE = 1411.8 SLUG-FT**2

MAIN ROTOR

	MODE SHAPE FOR MODE 1			MODE SHAPE FOR MODE 2			MODE SHAPE FOR MODE 3		
STA	OUT-OF-PLANE	INPLANE	TORSION	OUT-OF-PLANE	INPLANE	TORSION	OUT-OF-PLANE	INPLANE	TORSION
0	0.0	0.0001	0.0	0.0	-0.0996	0.2083	0.0	0.0565	13.8177
1	0.0900	0.0	0.0	-0.0331	-0.0998	0.2383	-0.1449	0.0541	15.7891
2	0.1001	0.0	0.0	-0.0722	-0.0858	0.2689	-0.2549	0.0450	17.6495
3	0.1501	0.0	0.0	-0.1126	-0.0637	0.2967	-0.3592	0.0266	19.3734
4	0.2001	0.0	0.0	-0.1447	-0.0337	0.3070	-0.4599	0.0027	20.1302
5	0.2501	0.0	0.0	-0.1714	0.0028	0.3171	-0.5509	-0.0225	21.1089
6	0.3001	-0.0001	0.0	-0.1783	0.0465	0.3250	-0.6287	-0.0481	22.2234
7	0.3501	-0.0001	0.0	-0.1728	0.0964	0.3301	-0.6840	-0.0730	23.4023
8	0.4001	-0.0001	0.0	-0.1589	0.1513	0.3327	-0.7265	-0.0968	24.5996
9	0.4501	-0.0002	0.0	-0.1400	0.2101	0.3332	-0.7427	-0.1191	25.8408
10	0.5001	-0.0002	0.0	-0.1181	0.2723	0.3318	-0.7346	-0.1395	27.1249
11	0.5501	-0.0003	0.0	-0.0943	0.3373	0.3289	-0.6968	-0.1575	28.4267
12	0.6001	-0.0003	0.0	-0.0692	0.4049	0.3250	-0.6313	-0.1724	29.5702
13	0.6501	-0.0004	0.0	-0.0432	0.4747	0.3203	-0.5292	-0.1839	30.5872
14	0.7001	-0.0005	0.0	-0.0164	0.5464	0.3121	-0.3912	-0.1918	31.5202
15	0.7501	-0.0005	0.0	0.0109	0.6197	0.3027	-0.2180	-0.1963	32.3012
16	0.8001	-0.0006	0.0	0.0384	0.6944	0.2960	-0.0131	-0.1979	32.9165
17	0.8500	-0.0006	0.0	0.0658	0.7701	0.2922	0.2177	-0.1973	33.3887
18	0.9000	-0.0007	0.0	0.0932	0.8465	0.2921	0.4685	-0.1951	33.7340
19	0.9500	-0.0007	0.0	0.1204	0.9232	0.2939	0.7318	-0.1918	33.9535
20	1.0000	-0.0008	0.0	0.1477	1.0000	0.2945	1.0000	-0.1882	34.0281

Figure 4-10. Aeroelastic Blade Data.

	MODE SHAPE FOR MODE 4			MODE SHAPE FOR MODE 5			MODE SHAPE FOR MODE 6		
STA	OUT-OF-PLANE	INPLANE	TORSION	OUT-OF-PLANE	INPLANE	TORSION	OUT-OF-PLANE	INPLANE	TORSION
0	0.0	0.0	0.0000	0.0	0.0	46.4056	0.0	0.0	0.0
1	0.0229	-0.0004	-0.0072	0.0263	0.0086	53.0369	0.0	0.0	0.0
2	0.0677	-0.0016	-0.0212	0.0729	0.0171	59.3060	0.0	0.0	0.0
3	0.1133	-0.0024	-0.0343	0.1192	0.0254	65.1753	0.0	0.0	0.0
4	0.1596	-0.0032	-0.0402	0.1643	0.0334	67.7793	0.0	0.0	0.0
5	0.2074	-0.0036	-0.0445	0.2057	0.0405	71.1662	0.0	0.0	0.0
6	0.2567	-0.0037	-0.0583	0.2412	0.0462	75.0609	0.0	0.0	0.0
7	0.3074	-0.0035	-0.0690	0.2697	0.0503	79.2400	0.0	0.0	0.0
8	0.3590	-0.0031	-0.0798	0.2909	0.0530	83.5587	0.0	0.0	0.0
9	0.4112	-0.0027	-0.0906	0.3046	0.0540	88.1367	0.0	0.0	0.0
10	0.4638	-0.0021	-0.1009	0.3098	0.0535	93.0028	0.0	0.0	0.0
11	0.5168	-0.0016	-0.1099	0.3049	0.0511	98.1004	0.0	0.0	0.0
12	0.5699	-0.0010	-0.1152	0.2971	0.0464	102.7810	0.0	0.0	0.0
13	0.6233	-0.0003	-0.1239	0.2531	0.0392	106.8808	0.0	0.0	0.0
14	0.6768	0.0003	-0.1458	0.2013	0.0292	110.3724	0.0	0.0	0.0
15	0.7305	0.0010	-0.1701	0.1333	0.0168	113.3000	0.0	0.0	0.0
16	0.7843	0.0016	-0.1864	0.0532	0.0026	115.7072	0.0	0.0	0.0
17	0.8381	0.0023	-0.1958	-0.0351	-0.0123	117.5903	0.0	0.0	0.0
18	0.8921	0.0030	-0.1974	-0.1289	-0.0281	118.9331	0.0	0.0	0.0
19	0.9460	0.0037	-0.1952	-0.2262	-0.0443	119.7334	0.0	0.0	0.0
20	1.0000	0.0043	-0.1944	-0.3250	-0.0606	120.0000	0.0	0.0	0.0

MODE NUMBER	1	2	3	4	5	6
MODE TYPE	RIGID BODY	CYCLIC	CYCLIC	COLLECTIVE	COLLECTIVE	NOT USED
DAMPING RATIO	0.0	0.20000E-01	0.20000E 00	0.20000E-01	0.20000E 00	0.0
GENERALIZED INERTIA	0.29262E 01	0.23356E 01	0.35817E 01	0.27523E 01	0.74136E 01	0.0
NATURAL FREQUENCY,/REV	0.99990E 00	0.15766E 01	0.27276E 01	0.10419E 01	0.28458E 01	0.0
CHARACTERISTIC COEFFICIENTS AT BLADE ROOT						
BEAM BENDING MOMENT,FT-LB	-0.14750E 02	0.23503E 03	0.53354E 04	0.61233E 04	0.24979E 05	0.0
CHORD BENDING MOMENT,FT-LB	-0.37523E 02	0.13620E 06	-0.10952E 06	0.83163E 02	0.27492E 04	0.0
TORSIONAL MOMENT,FT-LB	0.0	0.21275E 02	0.85373E 04	-0.26146E 01	0.32657E 05	0.0
VERTICAL SHEAR,LB	0.52092E 04	-0.19646E 04	-0.22849E 05	0.51929E 04	0.99169E 04	0.0
INPLANE SHEAR,LB	-0.52672E 01	0.90523E 04	-0.50352E 04	-0.27351E 02	0.21277E 04	0.0
MOMENT COEFFICIENTS AT R = 224.40 IN.						
BEAM BENDING MOMENT,FT-LB	-0.33438E 01	-0.68891E 04	0.26890E 05	0.18071E 04	0.91174E 04	0.0
CHORD BENDING MOMENT,FT-LB	-0.30899E 02	0.10620E 06	-0.90871E 05	-0.11434E 03	-0.34321E 03	0.0
TORSIONAL MOMENT,FT-LB	0.0	0.21221E 02	0.81637E 04	-0.26995E 01	0.31236E 05	0.0
NATURAL FREQUENCY AT						
10.0 COLL AND 308.0 RPM,/ 308.0 RPM	0.10000E 01	0.17435E 01	0.26558E 01	0.10455E 01	0.29773E 01	0.0
20.0 COLL AND 308.0 RPM,/ 308.0 RPM	0.10000E 01	0.15065E 01	0.28799E 01	0.10455E 01	0.29610E 01	0.0
10.0 COLL AND 340.0 RPM,/ 340.0 RPM	0.10000E 01	0.16176E 01	0.26088E 01	0.10412E 01	0.27647E 01	0.0
20.0 COLL AND 340.0 RPM,/ 340.0 RPM	0.10000E 01	0.14265E 01	0.27000E 01	0.10412E 01	0.27471E 01	0.0

Figure 4-10. Concluded.

The moment and shear coefficents represent the moments and shear forces which would exist at the center of the hub and the selected radial station for a unit deflection of each modal generalized coordinate. The bending moment coefficients printed here are actually in the local beamwise and chordwise directions.

4.3.4 Check of Aerodynamic Inputs

Several of the inputs to the Rotor Airfoil Aerodynamic Subgroups and the Wing and Stabilizing Surface Aerodynamic Groups are changed if their input values do not satisfy certain criteria or are obviously unreasonable. An error message is printed after the printout of any aeroelastic blade data explaining the action taken. The changing of any of these values will not in itself terminate execution.

4.3.5 Trim Condition in Accelerated Flight

If the rotorcraft is to be trimmed in accelerated flight, i.e., a coordinated turn, a pull-up, or pushover, information is printed concerning these conditions following any corrections to aerodynamic inputs. No message is printed for an unaccelerated flight condition.

4.3.6 Maneuver Specification (Figure 4-11)

The program prints the contents of the time card (CARD 301) and all maneuver control cards (all 311-type cards, the J-Cards) before starting the trim procedure. A program supplied title for the action caused by each J-Card is included to the left of the numerical inputs of the J-Cards. This serves as a record of the type of maneuver specified as well as a quick way to check the input data.

4.3.7 Airfoil Data Table Printout

The sets of Airfoil Data Tables input in the Data Table Group are printed in their order of input. If the internal NACA 0012 table is used it is printed last. Each set consists of three independent tables in the following order: lift, drag, pitching moment coefficients. The values of Mach number are listed across the page, and those of angle of attack are listed down the page. The inputs on the title card of each set of tables precede the printout of each set. Each table in each set is identified. See Figure 3-6 for the printout of the 0012 airfoil table.

4.3.8 Rotor-Induced Velocity Distribution (RIVD) Table Printout

The RIVD table is printed only when it is included in the input data. The printout heading is "TABLES USED IN ROTOR WAKE ANALYSIS" and is followed by the table title, and a statement of the number of advance ratios (NMU), inflow ratio, (NLM), radial stations (NRS), and harmonics

INPUT DATA FOR MANEUVER

START (SEC)	DELT1 (SEC)	MAX1 (SEC)	DELT2 (SEC)	MAX2 (SEC)	MAX3 (SEC)
0.0	30.000000	4.049999	30.000000	0.0	0.0

	J	XCIT(J,1)	(J,2)	(J,3)	(J,4)	(J,5)	(J,6)
COLLECTIVE STICK	1	99.000	0.0	0.0	0.0	0.0	0.0
F/A CYCLIC STICK	2	99.000	0.0	0.0	0.0	0.0	0.0
PEDAL MOVEMENT	4	99.000	0.0	0.0	0.0	0.0	0.0
SCAS ROLL CHANNEL	24	0.010	99.000	0.0	0.0	0.0	0.0
SCAS PITCH CHANNEL	25	0.010	99.000	0.0	0.0	0.0	0.0
SCAS YAW CHANNEL	26	0.010	99.000	0.0	0.0	0.0	0.0
SIMULATE AUTO PILOT	32	2.050	25.000	25.000	25.000	0.750	2.000
DROP EXTERNAL STORES	35	0.050	1.000	0.0	0.0	0.0	0.0

Figure 4-11. Maneuver Specification.

(NHH) included in the set of tables. The sets of coefficients are then printed in essentially the same format used for input, i.e., the table for the first set of advance and inflow ratios, followed by the table for the second set, etc. The heading for each table is "X/R MU= LAM= ", where X/R is the radial station (0.05 to 1.0), MU is the advance ratio, and LAM is the inflow ratio. For each table the NRS values of radial station are listed in the far-left column. The first number to the right of the first X/R value is the constant coefficient; the next two are the sine and cosine coefficients respectively for the first harmonic; the next two are for the second harmonic, etc. If more than four harmonics are included, the fifth harmonic pair is printed immediately below the first harmonic pair. The printout of four pairs of coefficients per line continues until all coefficients are printed for the first value of X/R. The succeeding sets of coefficients for each value of X/R are printed in the same format.

4.4 TRIM ITERATION PAGE (Figure 4-12)

If IPL(25) = 1, a trim iteration page is printed for each trim iteration computed.

4.4.1 Parameters in Iterations

The VAR(I) array printed across the top of the page gives the current values of the ten variables which are changed during the trim procedure.

VAR(1) = Collective Stick Position in Percent

VAR(2) = Fore-and-Aft Cyclic Stick Position in Percent

VAR(3) = Lateral Cyclic Stick Position in Percent

VAR(4) = Pedal Position in Percent

VAR(5) = Fuselage Pitch Angle in Degrees

VAR(6) = Fuselage Roll or Yaw Angle in Degrees (choice of roll or yaw is made by user, IPL(16))

VAR(7) = Main, Forward, or Right Rotor Fore-and-Aft Flapping Angle in Degrees (a_{1s})

VAR(8) = Main, Forward, or Right Rotor Lateral Flapping Angle in Degrees (b_{1s})

VAR(9) = Tail, Aft, or Left Rotor Fore-and-Aft Flapping Angle in Degrees (a_{1s})

VAR(10)= Tail, Aft, or Left Rotor Lateral Flapping Angle in Degrees (b_{1s})

***** START OF ITERATION 1 *****

VAR(I)	19.79790	53.05698	54.03185	33.99672	-3.82400	-0.77400	0.55000	-0.27500	1.75700	0.01200

	THRUST	H-FORCE	V-FORCE	TORQUE	IND. V.	JET THRUST	
MAIN ROTOR	9884.	190.	-229.	9219.	8.534	RIGHT/CENTER	0.
TAIL ROTOR	277.	15.	-4.	47.	6.745	LEFT	0.

FORCE AND MOMENT SUMMARY

	X-FORCE	Y-FORCE	Z-FORCE	ROLL	PITCH	YAW
FUSELAGE	-298.8	5.2	191.0	-4.0	-187.4	-340.4
MAIN ROTOR	-190.0	-229.3	-9884.0	-1568.0	-2933.9	98.2
TAIL ROTOR	-14.8	277.2	4.2	1096.7	176.1	-7544.5
RIGHT WING	-48.0	-15.0	-247.5	-793.7	24.8	152.4
LEFT WING	-47.9	15.0	-247.2	792.7	24.7	-152.2
STABILIZER #1	7.6	0.0	82.7	152.2	1477.4	-14.1
STABILIZER #2	7.6	0.0	82.7	-152.1	1476.8	13.4
STABILIZER #3	-7.7	57.0	-0.4	65.8	-2.8	-1483.9
JETS AND GUNS	0.0	0.0	0.0	0.0	0.0	0.0
STORE/BRAKE #1	-37.0	-0.1	14.4	14.4	-33.4	185.2
STORE/BRAKE #2	-37.0	-0.1	14.4	10.2	-35.9	131.3
STORE/BRAKE #3	-37.0	-0.1	14.4	-10.1	-35.9	-131.1
STORE/BRAKE #4	-37.0	-0.1	14.4	-14.3	-33.4	-185.1
GROSS WEIGHT	627.9	-126.9	9392.8			
M.R. TORQUE				280.4	-104.1	9218.6
T.R. TORQUE				0.0	47.0	-0.0
TOTAL	-112.3	-17.0	-614.2	-129.7	-142.2	-51.7

PARTIAL DERIVATIVE MATRIX

	X-FORCE	Y-FORCE	Z-FORCE	YAW MOM	PITCH MOM	ROLL MOM	MR F/A MOM	MR LAT MOM	TR F/A MOM	TR LAT MOM
COLLECTIVE	-3096.	-5121.	-157167.	166404.	-46712.	-34039.	-32906.	781543.	0.	0.
F/A CYCLIC	4404.	3544.	58671.	-27340.	-5595.	25212.	-39327.	-1441862.	0.	0.
LAT CYCLIC	-2254.	4137.	1125.	-40570.	15321.	29267.	-1260728.	-107743.	0.	0.
PEDAL	-10.	7547.	346.	-214369.	3632.	29667.	0.	0.	552.	7935.
PITCH	-10266.	-1773.	-55435.	-13089.	-64364.	-12601.	-41383.	59655.	-339.	-69.
ROLL	240.	9445.	379.	-1357.	-1948.	-1427.	-45280.	-110646.	5.	76.
MR F/A FLAP	-5908.	1898.	7179.	-47470.	42581.	13957.	-29341.	-1189869.	0.	0.
MR LAT FLAP	2431.	5303.	604.	33618.	-16937.	36920.	1096324.	-103688.	0.	0.
TR F/A FLAP	31.	-396.	128.	1668.	-3506.	-1642.	0.	0.	6911.	-10517.
TR LAT FLAP	267.	1204.	-19.	-41477.	-7397.	4899.	0.	0.	11136.	7354.
-ERROR	112.	17.	614.	52.	142.	130.	390.	-3675.	0.	-0.

Figure 4-2. Trim Iteration Page.

4.4.2 Rotor Performance

The two rows below the VAR(I) array give the following quantities for the two rotors:

- Thrust in shaft reference (lb)
- H-Force in shaft reference (lb)
- Y-Force in shaft reference (lb)
- Torque (Z component) in shaft reference (ft-lb)
- Average induced velocity (ft/sec)

The values of the left and right jet thrusts are also included in this block of data.

4.4.3 Force and Moment Summary

This block of output shows the contribution to the total forces and moments of each component of the rotorcraft which is included in the input data. The X-force, Y-force, Z-force, roll moment, pitch moment, and yaw moment are in body reference, with the forces in pounds and the moments in foot-pounds.

Each force and moment forms one column of the summary, where each row corresponds to a component of the rotorcraft. Except for the Jets and Guns row, only the components for which an input group was included are printed. If, for example, only two stabilizing surfaces were input, the rows for Stabilizing Surfaces No. 3 and No. 4 will not be printed. The complete list of possible rows in order is as follows:

FUSELAGE
MAIN ROTOR
TAIL ROTOR
RIGHT WING
LEFT WING
STABILIZER #1
STABILIZER #2
STABILIZER #3
STABILIZER #4
JETS AND GUNS

STORE/BRAKE #1

STORE/BRAKE #2

STORE/BRAKE #3

STORE/BRAKE #4

GROSS WEIGHT

M.R. TORQUE

TOTAL

Note that the rows labeled "M.R. TORQUE" and "T.R. TORQUE" include the moment due to flapping restraint as well as the body axis components of the appropriate shaft axis rotor torque. The rows labeled "MAIN ROTOR" and "TAIL ROTOR" include only the effects of the rotor forces acting at each hub when resolved to the cg.

4.4.4 Partial Derivative Matrix

This matrix gives the partial derivative of each force and moment with respect to each of the iteration variables. The units are pounds per radian on the force derivatives and foot-pounds per radian on the moment derivatives. For the controls, the angles are rotor blade angles. The line labeled "-ERROR" gives the negative of the force and the moment imbalances at this iteration. If input IPL(17) = 0 or 5, this matrix is computed and printed at every fifth iteration; otherwise, it is computed and printed every IPL(17)th iteration.

4.4.5 Correction Array

The line labeled "CORRECTIONS" gives the computed changes in the iteration variables VAR(I), in radians. They are in the same order as the VAR(I) and the partial derivative rows. It is printed only when one or more of the computed corrections are greater than the maximum allowed by variable damper procedures. If such a case occurs, the computed corrections are multiplied by a ratio which will make all corrections within the allowable range, and this ratio is printed along with the sequence number of the iteration variable which determined it. The ratioed corrections are then added to the iteration variables to determine the values for the next iteration. It should be noted again that the "CORRECTIONS" are in radians and not the same units as the VAR(I) printed. The printing of this array generally indicates that the inputs for the maximum allowable corrections were too small or that the values of VAR(I) may not be converging to a trim solution. The array is most useful when a case does not trim, since it indicates which VAR(I) is preventing trim.

4.5 TRIMMED FLIGHT CONDITION PAGES

Two types of printouts are possible for the data computed in the last trim iteration. These printouts are the standard trim page and the optional trim page. The standard trim page is always printed. If the optional trim page is to be printed, it follows the standard trim page.

When performing a quasi-static trim followed by a time-variant trim, the standard trim page will be printed twice with data regarding the time-variant trim printed in between the two. The second trim page will be an update of the first page, reflecting the effects of the time-variant trim. If the switch to print the optional trim page is turned on, the optional page will be printed after each of the standard trim pages. The data printed out during a time-variant trim is discussed in Section 4.6.

4.5.1 Standard Trim Page (Figure 4-13)

This page follows the final trim iteration. The final iteration occurs either when all forces and moment imbalances are within their respective allowable errors, XIT(15) through XIT(21), or after XIT(1) iterations have been performed. If the page is printed because XIT(1) iteration were exceeded, the trim page is printed even though the rotorcraft is not actually trimmed. However, program execution terminates immediately after the printout. When the page is printed because the imbalances are within the prescribed limits, the program continues on to subsequent operations or cases.

The data are printed in blocks as discussed below.

4.5.1.1 Problem Identification

The problem identification consists of a line containing the name of the program and the date the job was computed followed by the alphanumeric comments input on CARDS 02, 03, 04.

4.5.1.2 Trim Condition Specification

A one-line message is printed stating whether or not the rotorcraft is in a trimmed flight condition, the number of trim iterations used, the computer CPU time used, and the value of NPART. As implied above, the rotorcraft is termed trimmed when the imbalances are less than the allowable errors, and not trimmed when XIT(1) iterations are performed without the imbalances being less than the allowable errors.

4.5.1.3 Atmospheric Parameters

This block of data describes the atmospheric conditions in which the rotorcraft was trimmed. The density altitude, density ratio, and speed of sound are computed from equations which were empirically derived to

BELL HELICOPTER COMPANY ROTORCRAFT FLIGHT SIMULATION PROGRAM AGAJ73

MODEL 209 AH-1G HUEYCOBRA WITH 4 M200A1 RKT LAUNCHERS
19 RKTS EACH INBOARD STORE; 14 RKTS EACH OUTBOARD STORE
V = 100 KTAS ASYMMETRIC STORE DROP OF OUTBOARD POD SLS
ROTORCRAFT IS TRIMMED AFTER 4 ITERATIONS. 0.693 MINUTES ELAPSED COMPUTING TIME. NPART = 2

ATMOSPHERIC CONDITIONS (ICAO)

PRESSURE ALTITUDE (FT)	0.	DENSITY ALTITUDE (FT)	0.	ALTITUDE ABOVE GROUND (FT)	1000.00
TEMPERATURE (DEG C)	15.00	DENSITY RATIO	1.0000	SPEED OF SOUND (FT/SEC)	1117.17

WEIGHTS	POUNDS	CENTER OF GRAVITY (IN) S.L.	B.L.	W.L.
BASIC A/C	7000.	193.00	0.0	75.00
STORES	2415.			
TOTAL	9415.	194.86	-0.00	70.56

POWER/TORQUE	SHAFT HORSEPOWER	TORQUE FT-LB	SPEED RPM
MAIN	573.33	9292.1	324.1
TAIL	14.85	47.1	1656.6
ENG	588.19	9532.9	6600.0

BLADE	TIP SPEED	ADV BLD MACH NO	INERTIA SLUG-FT-SQ
MAIN	747.	0.819	1411.807
TAIL	737.	0.811	1.398

JET THRUST LBS	
RT	0.0
LT	0.0

BODY REFERENCE

	U	V	W	P	Q	R
VELOCITY	168.332	0.168	-12.290	0.0	0.0	0.0

FLIGHT PATH CONDITION

TRUE AIRSPEED	(KNOTS)	100.00
GROUND SPEED	(KNOTS)	100.00
RATE OF CLIMB	(FT/SEC)	0.0
CLIMB ANGLE	(DEG)	0.0
HEADING ANGLE	(DEG)	0.0
ANGLE OF ATTACK	(DEG)	-4.18
ANGLE OF SIDESLIP	(DEG)	0.06
ANGLE OF AERO YAW	(DEG)	-0.06
ACCELERATIONS VERT	(G)	1.00
FWD	(G)	0.07
LAT	(G)	-0.01

AERODYNAMIC SURFACES

SURFACE	ANGLE OF INCIDENCE	FLAP ANGLE	BODY AXIS FORCES X +FWD	Y +RIGHT	Z +DOWN	AERODYNAMIC ANGLE ATTACK	SIDESLIP
NO. 1	6.56	0.0	9.1	0.0	91.4	-2.89	0.06
NO. 2	6.56	0.0	9.1	0.0	91.3	-2.89	0.06
NO. 3	4.50	0.0	-7.7	56.2	-0.5	3.48	-4.18
NO. 4	0.0	0.0	0.0	0.0	0.0	0.0	0.0
RT WING	14.00	0.0	-47.0	-14.4	-237.8	8.41	0.40
LT WING	14.00	0.0	-46.9	14.4	-237.5	8.40	-0.29

GROUND REFERENCE

	EULER ANGLES TO BODY REFERENCE PSI	THETA	PHI	DISPLACEMENTS X	Y	Z
VELOCITY	0.0	0.0	0.0	168.780	0.0	0.0
LOCATION	0.0	-4.176	-0.781			

CONTROL DISPLACEMENTS

		PERCENT	SWASH PLATE ANGLE (DEGREES) MAIN ROTOR COLL	F/A	LAT	TAIL ROTOR COLL	F/A	LAT
COLL	(UP)	19.78	13.15	0.0	0.0	0.0	0.0	0.0
F/A CYC	(FWD)	54.21	0.0	1.44	0.0	0.0	0.0	0.0
LAT CYC	(RT)	54.00	0.0	0.0	-1.19	0.0	0.0	0.0
PEDAL	(LT)	34.05	0.0	0.0	0.0	2.68	0.0	0.0
SUM OF PYLON AND SCAS			0.0	0.0	0.0	0.0	0.0	0.0
TOTAL SWASH PLATE ANG			13.15	1.44	-1.19	2.68	0.0	0.0

HUB-MAST-PYLON		(MAIN)	(TAIL)
DELTA 3	(DEG)	0.0	30.0
PHASING	(DEG)	0.0	0.0
HUB SPRING MOMENT	F/A	0.	0.
(FT-LB)	LAT	0.	0.
PYLON DEFLECTION	F/A	0.0	0.0
(DEG)	LAT	0.0	0.0
MAST ANGLE (DEG)	F/A	0.0	0.0
	LAT	0.0	90.00

ROTORS

	BLADE FEATHERING - DEG MEAN	PSI=0	PSI=90	FLAPPING - DEG F/A	LAT	FORCES (SHAFT AXIS) POUNDS THRUST	H-FORCE	Y-FORCE	ADVANCE RATIO	CP X10**5	CT X10**4	INDUCED VELOCITY
MAIN	13.15	1.19	-1.44	0.315	-0.287	9312.98	139.42	-211.16	0.226	20.957	46.209	8.47
TAIL	2.68	0.0	0.0	1.764	0.003	278.44	14.88	-4.35	0.229	15.107	37.960	6.78

Figure 4-13. Trimmed Flight Condition Page.

simulate the atmosphere prescribed by the International Civil Aviation Organization (ICAO). This defined atmosphere is the same as the 1962 United States standard.

4.5.1.4 Physical and Power Parameters

Immediately below and at the left end of the atmospheric data, data on the rotorcraft weight and center of gravity location are presented. The data include the weight and cg location without external stores, the total weight of all external stores, and the gross weight and cg location with stores. The stores-on data are those which are used during the trim procedure. The other data are for reference only.

To the right of the weight and cg data and in the center of the page are the power and torque for each rotor and the engine. "ENG" stands for "supplied by engine." Note that while the sum of main rotor and tail rotor horsepower equals the engine power required, the sum of main and tail rotor torques will not equal the engine torque unless the rotational speeds of all three are equal.

To the right of the power and torque data are rotor blade parameters. Tip speed is in feet per second, and advancing blade Mach number is computed at the blade tip. Blade flapping inertia is for a single blade.

To the right of the blade data are the thrusts of the right and left jets in pounds.

4.5.1.5 Body Reference Parameters

Immediately below the physical and power parameter printout, the linear and angular velocities of the rotorcraft in the Body Reference System are printed. The sequence of outputs is X, Y, and Z linear velocities in feet per second followed by the roll, pitch and yaw angular velocities in degrees per second.

4.5.1.6 Flight Path/Aerodynamic Surface Parameters

Below and to the right of the body reference data are the parameters which define and orient the rotorcraft with respect to the flight path. True airspeed is the airspeed along the flight path and is equal to the ground speed only when the rate of climb is zero. (The program assumes that with no gusts the air mass is stationary with respect to the ground.) The climb and heading angles are defined in Section 4.2.3.1. The three aerodynamic angles and accelerations are defined in Sections 4.2.3.2 and 4.2.3.4 respectively. Note that the three accelerations are in the Body Reference System.

To the right of the flight path conditions are the aerodynamic surface parameters. These parameters consist of the angle of incidence; flap or control surface angle; body axis X, Y, and Z forces; and aerodynamic angles for the right and left panels of the wing and each of the four stabilizing surfaces. The aerodynamic angles are defined like the fuselage angles in Section 4.2.3.2 except that the velocities used in the definition are in the aerodynamic surface reference system rather than the body reference system.

4.5.1.7 Ground Reference Parameters

Below the flight path and aerodynamic surface data are the ground reference parameters. The location and rates of change of the three ground-to-body Euler angles are printed in degrees and degrees per second, respectively.

4.5.1.8 Flight and Rotor Control Parameters

Below and to the left of the ground reference parameters are the positions of the four primary flight controls in percent. To the right of the control positions is a matrix of the contributions of each of these controls plus the pylon and SCAS to each of the swashplate angles of each rotor. The entries in the bottom row of the matrix are simply the summation of the column above them. All entries are in degrees. The collective pitch contributions are actually angles at the blade root since the swashplate does in truth have a collective pitch angle. The collective pitch of the swashplate would be more properly expressed as a vertical displacement of the swashplate or collective pitch sleeve. However, the control system model is currently not capable of providing this data.

To the right of the control contribution matrix are data for the hub, mast, and pylon plus the values of the pitch-flap-coupling and control-phasing angles. The mast angle and pylon deflections are defined in Table 4-2. The hub-spring moments are in the Rotor Shaft Reference System.

4.5.1.9 Rotor Parameters

Below the controls data are the rotor parameters. This output group consists of the blade feathering, flapping, rotor forces, advance ratio, power and thrust coefficients, and induced velocity for each rotor. All parameters are in the Rotor Shaft Reference System. The blade feathering angles are measured at the theoretical blade root (Station No. 0). The mean blade feathering angle is identical to the collective pitch printed in the controls matrix. The F/A feathering angle (PSI = 0) and lateral angle (PSI = 90) will differ from the F/A and LAT swashplate angles when the value of the pitch-flap-coupling angle minus the control-phasing angle ($\delta_3 - \gamma$) is nonzero. Sign conventions for the flapping angles are

defined in Section 4.2.1. Thrust is positive up the rotor shaft. H-force and Y-force are positive in the direction of the positive shaft reference X and Y axes, respectively.

$$\text{ADVANCE RATIO} = \mu = \frac{\text{Velocity in the Shaft X-Y Plane}}{\text{Rotor Tip Speed}}$$

and is dimensionless.

The power coefficient is defined as

$$CP = \text{Power}/(\rho\ \pi\ R^2(\Omega R)^3)$$

and the thrust coefficient as

$$CT = \text{Thrust}/(\rho\ \pi\ R^2(\Omega R)^2)$$

where ρ = air density, slug/ft^3

R = rotor radius, ft

ΩR = rotor tip speed, ft/sec

Both coefficients are dimensionless. The nondimensionalization factors used here are not the same as those used in the optional trim page.

The induced velocity is the average value over the rotor disc in feet per second.

4.5.2 Optional Trim Page (Figure 4-14)

Printout of this page is controlled by IPL(26). The optional trim page is most useful for presenting data from a wind tunnel simulation.

4.5.2.1 Problem Identification

The standard trim page heading with comment cards is repeated at the top of the optional trim page(s).

4.5.2.2 Parameter Listing

Four blocks of data are printed across the page below the problem identification: rotor controls, rotor parameters, (wind) tunnel parameters, and program options. The items printed are generally either self-explanatory or have been explained previously. The dimensions, if any, for all parameters are included in the printout.

BELL HELICOPTER COMPANY ROTORCRAFT FLIGHT SIMULATION PROGRAM AGAJ73 COMPUTED 12/08/73

MODEL 209 AH-1G HUEYCOBRA WITH 4 M200A1 RKT LAUNCHERS
19 RKTS EACH INBOARD STORE; 14 RKTS EACH OUTBOARD STORE
V = 100 KTAS ASYMMETRIC STORE DROP OF OUTBOARD POD SLS

ROTOR CONTROLS			ROTOR PARAMETERS			TUNNEL PARAMETERS			PROGRAM OPTIONS	
COLLECTIVE PITCH	13.169	DEG	ROTOR SPEED	324.36	RPM	FORWARD SPEED	100.00	KTS	NO INPUT PCEES	5
F/A CYCLIC PITCH	1.633	DEG	SOLIDITY	0.0651		ADVANCE RATIO	0.2261		MAX YAW FLCH ANG	0.0 DEG
LAT CYCLIC PITCH	-1.192	DEG	BLADE RADIUS	22.00	FT	ADV TIP MACH NO	0.819		AERODYNAMICS	TABLE
TOT CYC FEATHER	2.022	DEG	CHORD	27.00	IN	SIGMA PRIME	1.000		TORSION	ON
DELTA 3	0.0	DEG	PRECONE	2.75	DEG	PAST TILT ANGLE	0.0	DEG	NON STEADY AERC	OFF
F/A FLAP ANGLE	0.109	DEG	CONING	-0.468	DEG	TPP ANG OF ATTACK	-3.91	DEG	FLAP ITERATICN	OFF
LAT FLAP ANGLE	-0.298	DEG	TWIST	-10.00	DEG	CNT PL ANG OF ATTACK	-5.65	DEG	FREQUENCY CHANGE	ON
TOTAL FLAP ANGLE	0.317	DEG	TIP SWEEP	0.0	DEG	ROTOR TIP SPEED	746.6	FT/SEC	ELASTIC PYLCN	OFF

* * * * * * FORCES AND MOMENTS * * * * * *

WIND AXIS SYSTEM	DIMENSIONLESS HELICOPTER	DIMENSIONLESS FIXED-WING	DIMENSIONAL	SHAFT AXIS SYSTEM	DIMENSIONLESS HELICOPTER	DIMENSIONLESS FIXED-WING	DIMENSIONAL
LIFT FORCE	0.0709075	2.1793299	9304.42 LBS	THRUST	0.0709075	2.1793299	9304.42 LBS
DRAG FORCE	0.0008122	0.0249623	106.57 LBS	H FORCE	0.0008122	0.0249623	106.57 LBS
LAT FORCE	-0.0016139	-0.0496017	-211.77 LBS	V FORCE	-0.0016139	-0.0496017	-211.77 LBS
ROLL MOMENT	0.0000972	0.0014937	280.60 FT-LBS	ROLL MOMENT	0.0000972	0.0014937	280.60 FT-LBS
PITCH MOMENT	-0.0000364	-0.0005598	-105.16 FT-LBS	PITCH MOMENT	-0.0000364	-0.0005598	-105.16 FT-LBS
YAW MOMENT	0.0032331	0.0496046	9333.41 FT-LBS	YAW MOMENT	0.0032331	0.0496046	9333.41 FT-LBS
				POWER	0.0032331	0.4395046	575.88 HP

* * * * * * ROTOR LOADS * * * * * *

R/R	BEAM LOADS (IN-LBS) MEAN	CSC	/MAX AZ	/MIN AZ	CHORD LOADS (IN-LBS) MEAN	CSC	/MAX AZ	/MIN AZ	R/R	TORSION LOADS (IN-LBS) MEAN	CSC	/MAX AZ	/MIN AZ
.20	0.0	0.0	0.	0.	0.0	0.0	0.	0.	.20	0.0	0.0	0.	0.
.35	0.0	0.0	0.	0.	0.0	0.0	0.	0.	.35	0.0	0.0	0.	0.
.45	0.0	0.0	0.	0.	0.0	0.0	0.	0.	.45	0.0	0.0	0.	0.
.65	0.0	0.0	0.	0.	0.0	0.0	0.	0.	.65	0.0	0.0	0.	0.
.80	0.0	0.0	0.	0.	0.0	0.0	0.	0.	.80	0.0	0.0	0.	0.

Figure 4-14. Optional Trim Page.

If the blade chord is not constant, the average value of chord is printed.

If the blade geometric twist is not linear, the printed twist value is the total angle between the root and the tip.

The solidity parameter, σ, is defined as

$$\sigma = n\bar{c}/\pi R$$

where n = number of blades

$\bar{c}$ = average chord

R = rotor radius

4.5.2.3 Forces and Moments

Below the parameter listing, the rotor forces and moments are printed in both the wind reference and shaft reference systems. Rotor power is printed in shaft axis only. Each set of data consists of two nondimensional coefficients and the dimensional values for each force and moment. The factors which are divided into the dimensional forces, moments, and power to give their nondimensional forms are given below:

	Forces	Moments	Power
Helicopter	$\rho bcR(\Omega R)^2$	$\rho bcR(\Omega R)^2 R$	$\rho bcR(\Omega R)^3$
Fixed Wing	$qD^2\sigma$	$qD^3\sigma$	$qD^2\sigma V$

where

ρ = air density (slugs/ft^3)

b = number of blades

c = chord (ft)

R = rotor radius (ft)

Ω = rotor speed (rad/sec)

V = wind velocity (ft/sec)

$q = 1/2\ \rho\ V^2$ (lbf/ft^2)

D = diameter of rotor disk = $2R$ (ft)

σ = rotor solidity = $bcR/\pi R^2$

4.5.2.4 Rotor Loads

A summary of the beam, chord, and torsional rotor loads is printed below the forces and moments. Data are presented for Blade Stations No. 4, 7, 11, 13 and 16 (20, 35, 45, 65, and 80 percent of blade radius, respectively). The higher the station number or percent radius, the more outboard the station is. The data for each of the three loads consists of the mean and oscillatory values plus blade azimuth location for the maximum and minimum loads. The loads are in inch-pounds; the azimuth angles are in degrees.

4.6 TIME-VARIANT TRIM DATA

Using appropriate input values, it is possible to compute the trimmed flight condition using only a quasi-static rotor analysis, or to compute first a trim with the quasi-static analysis and follow it with a time-variant trim (TVT) of the rotor. The output of the TVT following a quasi-static trim is discussed below.

4.6.1 The Time History (Figure 4-15)

Following the quasi-static trim, the program computes a time history of five rotor revolutions for each rotor for which the time-variant analysis is to be used. During the computations, the fuselage and flight control degrees of freedom are locked out, the orientation and control positions being held fixed at the values in the quasi-static trim condition. However, all rotor, pylon, and mast-windup modes which are input are free. The output of a TVT includes the complete time history for each time-variant rotor with one line of output for each blade azimuth location which is computed for Blade No. 1. For a TVT with an azimuth increment of 15 degrees and both rotors time-variant, this is 240 printed lines of double-spaced output, or about eight pages of computer paper.

The time history is printed in columnar form with the variables identified only at the beginning. The azimuth location in degrees of Blade No. 1 is the column headed "REF BLADE PSI." If the rotor(s) use the elastic blade representation, up to six modal participation factors are listed under "DEPENDENT PARTICIPATION FACTORS." If a rigid blade is used, only the first factor is nonzero. The pylon motions and mast windup are in degrees. If two elastic rotors are being used, the time history for the second rotor follows immediately after the end of the first. A new set of headings is not printed, so it is necessary to count the rotor revolutions to find the dividing point.

4.6.2 Revised Trim Data

At the end of the time history printout(s), the VAR(I) values, rotor performance data, and force and moment summary (see Sections 4.4.1, 4.4.2, and 4.4.3 respectively) are printed again for comparison to the

* * * TIME-VARIANT TRIM * * *

REF BLADE PSI	DEPENDENT PARTICIPATION FACTORS 1	2	3	4	5	6	PYLON DISP F/A	PYLON DISP LAT	MAST WIND-UP DISP
0.0	-0.12084	0.39885E-01	0.17788E-01	-0.17687	0.67355E-02	0.0	0.0	0.0	0.0
15.000	-0.88270E-01	0.22278E-01	0.44343E-02	-0.17265	0.66146E-02	0.0	0.0	0.0	0.0
30.000	-0.49381E-01	0.31210E-02	-0.93270E-02	-0.15752	0.61138E-02	0.0	0.0	0.0	0.0
45.000	-0.70208E-02	-0.16523E-01	-0.22733E-01	-0.13864	0.53415E-02	0.0	0.0	0.0	0.0
60.000	0.34507E-01	-0.35425E-01	-0.34701E-01	-0.12493	0.47826E-02	0.0	0.0	0.0	0.0
75.000	0.71042E-01	-0.51954E-01	-0.44109E-01	-0.12362	0.50948E-02	0.0	0.0	0.0	0.0
90.000	0.10024	-0.64283E-01	-0.50320E-01	-0.13729	0.64394E-02	0.0	0.0	0.0	0.0
105.00	0.12218	-0.70984E-01	-0.53350E-01	-0.16278	0.81412E-02	0.0	0.0	0.0	0.0
120.00	0.13774	-0.71467E-01	-0.53384E-01	-0.19350	0.92283E-02	0.0	0.0	0.0	0.0
135.00	0.14678	-0.66019E-01	-0.50305E-01	-0.22263	0.9[illegible]742E-02	0.0	0.0	0.0	0.0
150.00	0.14802	-0.55672E-01	-0.43803E-01	-0.24455	0.81519E-02	0.0	0.0	0.0	0.0
165.00	0.13784	-0.41836E-01	-0.33813E-01	-0.25523	0.67356E-02	0.0	0.0	0.0	0.0
180.00	0.12145	-0.26007E-01	-0.20810E-01	-0.25262	0.55240E-02	0.0	0.0	0.0	0.0
195.00	0.93650E-01	-0.94783E-02	-0.58022E-02	-0.2[illegible]723	0.48717E-02	0.0	0.0	0.0	0.0
210.00	0.58658E-01	0.67859E-02	0.98193E-02	-0.21231	0.47386E-02	0.0	0.0	0.0	0.0
225.00	0.19846E-01	0.22147E-01	0.24482E-01	-0.18376	0.48853E-02	0.0	0.0	0.0	0.0
240.00	-0.18779E-01	0.36100E-01	0.36659E-01	-0.15899	0.52376E-02	0.0	0.0	0.0	0.0
255.00	-0.53492E-01	0.48003E-01	0.45235E-01	-0.14467	0.59892E-02	0.0	0.0	0.0	0.0
270.00	-0.82198E-01	0.57092E-01	0.49924E-01	-0.14398	0.71655E-02	0.0	0.0	0.0	0.0
285.00	-0.10467	0.62746E-01	0.51227E-01	-0.15554	0.83237E-02	0.0	0.0	0.0	0.0
300.00	-0.12128	0.64696E-01	0.49835E-01	-0.17485	0.88542E-02	0.0	0.0	0.0	0.0
315.00	-0.13175	0.63022E-01	0.46063E-01	-0.19653	0.84681E-02	0.0	0.0	0.0	0.0
330.00	-0.13490	0.57933E-01	0.39819E-01	-0.21537	0.73937E-02	0.0	0.0	0.0	0.0
345.00	-0.12928	0.49709E-01	0.30920E-01	-0.22689	0.61713E-02	0.0	0.0	0.0	0.0
360.00	-0.11467	0.38609E-01	0.19462E-01	-0.22796	0.53194E-02	0.0	0.0	0.0	0.0

Figure 4-15. Partial Printout of Time-Variant Trim Data.

quasi-static trim values. Note that the rotor flapping angles are not printed with VAR(I) since they are not controlled variables. In addition to the normal force and moment summary, the rotor flapping moment about the hub is printed at the end of the summary. As stated previously the standard trim page is then printed again, this time with the rotor parameters reset to the values at the end of the five revolutions.

4.6.3 Rotor Dynamic Analysis

If the rotor(s) use the elastic blades representation, a harmonic analysis of the time history is performed, and a rotor bending moment summary is printed.

4.6.3.1 Harmonic Analysis of Elastic Rotor Parameters (Figure 4-16)

The results of a harmonic analysis of the nine parameters shown in Figure 4-15 are printed in tabular form. From left to right, the nine columns of data are the coefficients for the zero (constant) through eighth rotor harmonic. The printout of all cosine components precedes that of the sine components. The rows labeled 1 through 6 are for the first through sixth modal participation factors respectively. Rows 7, 8, and 9 are for the fore-and-aft and lateral pylon displacements and mast windup, respectively.

4.6.3.2 Rotor Bending Moment Summary for Elastic Rotor (Figure 4-17)

Following the harmonic analysis, a four-page summary of rotor bending moments in blade reference is printed for each time-variant rotor. Tables of the beam, chord, and torsional moments for the first eight rotor harmonics and at all twenty radial stations are shown on the first three pages. A reprise of the minimum, maximum, and oscillatory moments, with azimuth locations for the extreme values, is printed on the fourth page. The oscillatory moment is defined as one-half the difference of maximum and minimum, regardless of frequency considerations. All moments are in inch-pounds.

4.7 MANEUVER-TIME-POINT PRINTOUT (Figure 4-18)

It is possible to print out data computed during a maneuver at specified time points. The value of NPRINT on CARD 01 specifies that data is to be printed each NPRINTth time point.

4.7.1 External Store Drop Printout

When an external store is dropped during the maneuver, a message is printed stating which store was dropped. Also, the values for the gross weight, cg location, and inertias of the rotorcraft following the drop are printed. If two or more stores are dropped simultaneously, independent messages are printed for each drop. The printout precedes the printout of the first time point without the store(s).

HARMONIC ANALYSIS OF ROTOR 1

COSINE COMPONENTS

1	-0.197371E-03	-0.108438	0.496606E-04	-0.329317E-02	0.113999E-03	0.293160E-03	0.973893E-04	0.814746E-04	0.925362E-04
2	0.195586E-02	0.354818E-01	0.366946E-03	-0.914907E-03	-0.100231E-03	-0.491046E-04	-0.387144E-04	-0.250966E-04	-0.222546E-04
3	-0.514507E-01	0.185409E-01	0.489872E-04	0.138734E-02	-0.462557E-07	-0.837299E-04	0.132558E-06	0.475999E-05	0.462557E-06
4	-0.189872	-0.704840E-03	-0.432159E-01	0.723948E-04	0.305464E-03	-0.479569E-04	-0.684609E-04	-0.827908E-04	-0.890245E-04
5	0.654469E-02	0.896367E-04	-0.103442E-02	-0.952184E-05	-0.335185E-03	-0.561836E-05	-0.796281E-06	-0.344341E-05	-0.220289E-05
6	0.0	0.0	0.0	0.0	0.0	0.0	0.0	0.0	0.0

SINE COMPONENTS

1	0.0	0.786774E-01	0.430231E-03	-0.103208E-02	0.146254E-03	0.185939E-03	0.849813E-04	0.748949E-04	0.481289E-04
2	0.0	-0.598002E-01	0.304048E-02	0.513074E-03	0.195185E-04	-0.254085E-04	0.111386E-04	0.122938E-04	0.596443E-05
3	0.0	-0.505302E-01	0.996693E-03	0.198487E-03	-0.520197E-05	-0.157737E-04	0.189431E-05	-0.241989E-06	0.893388E-06
4	0.0	0.418524E-03	0.187174E-01	-0.367341E-03	-0.136827E-02	-0.172793E-03	-0.575781E-04	-0.100792E-03	-0.806894E-04
5	0.0	-0.244964E-04	-0.163235E-02	-0.160193E-04	0.223089E-03	-0.386943E-05	-0.295564E-04	-0.137631E-05	-0.280410E-06
6	0.0	0.0	0.0	0.0	0.0	0.0	0.0	0.0	0.0

Figure 4-16. Harmonic Analysis Following Time-Variant Trim.

ROTOR NUMBER 1 BEAM BENDING MOMENTS INCH-POUNDS

SINE COMPONENTS

STATION / HARMONIC	STEADY	1/REV	2/REV	3/REV	4/REV	5/REV	6/REV	7/REV	8/REV
1	0.0	-357.79	9.43	1.24	-0.58	-0.10	0.07	-0.01	0.00
2	0.0	-972.62	24.26	3.22	-1.45	-0.28	0.16	-0.04	-0.00
3	0.0	-1539.77	33.87	4.90	-1.86	-0.45	0.20	-0.06	-0.00
4	0.0	-2201.40	45.10	6.95	-2.15	-0.65	0.22	-0.10	-0.00
5	0.0	-3006.49	57.78	9.63	-2.24	-0.90	0.22	-0.13	-0.00
6	0.0	-3835.44	68.88	12.41	-2.05	-1.17	0.18	-0.16	-0.00
7	0.0	-4211.29	64.32	13.19	-1.02	-1.31	-0.00	-0.21	-0.01
8	0.0	-3863.54	35.37	10.89	1.27	-1.23	-0.35	-0.25	-0.04
9	0.0	-3311.21	2.44	7.73	3.59	-1.11	-0.75	-0.32	-0.08
10	0.0	-3139.21	-16.97	6.44	5.41	-1.12	-1.05	-0.37	-0.11
11	0.0	-3372.85	-19.81	7.24	6.60	-1.31	-1.31	-0.42	-0.14
12	0.0	-3927.30	-7.33	10.06	7.47	-1.67	-1.54	-0.46	-0.17
13	0.0	-4846.78	26.68	15.70	7.93	-2.28	-1.78	-0.50	-0.22
14	0.0	-6412.95	98.53	26.00	7.51	-3.30	-1.97	-0.50	-0.28
15	0.0	-8797.62	228.92	43.01	5.41	-4.93	-2.09	-0.48	-0.37
16	0.0	-12049.84	426.59	68.05	1.74	-7.23	-2.14	-0.38	-0.48
17	0.0	-15231.37	659.24	96.50	-2.32	-9.93	-2.33	-0.27	-0.65
18	0.0	-15672.33	813.31	114.52	-1.90	-11.93	-3.23	-0.16	-0.89
19	0.0	-7094.47	163.69	6.61	-5.30	-9.22	-8.06	-4.22	-2.96
20	0.0	-3394.35	372.49	-17.44	-34.24	-14.97	-12.92	-7.81	-5.95

COSINE COMPONENTS

STATION / HARMONIC	STEADY	1/REV	2/REV	3/REV	4/REV	5/REV	6/REV	7/REV	8/REV
1	-23.97	121.93	1.49	11.60	0.82	-0.62	0.03	0.06	0.02
2	-67.24	324.99	1.69	32.81	2.01	-1.71	0.09	0.17	0.07
3	-88.63	505.89	2.47	53.58	2.64	-2.74	0.17	0.29	0.12
4	-118.85	720.86	-1.06	76.25	2.94	-3.92	0.24	0.41	0.16
5	-139.52	994.72	-3.96	102.51	2.95	-5.34	0.30	0.53	0.20
6	-151.23	1278.53	-7.96	129.30	2.53	-6.81	0.34	0.64	0.23
7	-141.78	1389.49	-18.22	144.81	0.88	-7.57	0.43	0.71	0.26
8	-80.29	1226.09	-31.23	142.15	-2.38	-7.19	0.52	0.72	0.29
9	-37.63	988.86	-51.61	133.80	-5.91	-6.49	0.60	0.70	0.31
10	-11.76	907.10	-69.36	132.71	-8.83	-6.34	0.64	0.68	0.31
11	-44.46	1002.58	-96.82	137.58	-11.49	-6.76	0.58	0.62	0.23
12	-131.41	1257.74	-137.08	143.11	-14.46	-7.58	0.37	0.46	0.07
13	-298.07	1728.01	-197.91	145.52	-18.10	-8.79	-0.08	0.13	-0.27
14	-608.12	2547.26	-293.23	140.72	-22.59	-10.59	-0.95	-0.51	-0.89
15	-1165.56	3865.27	-446.36	122.54	-28.11	-13.13	-2.47	-1.62	-1.96
16	-1981.47	5755.60	-663.43	80.50	-35.40	-16.27	-4.83	-3.37	-3.59
17	-3022.76	7832.98	-952.35	-3.69	-45.88	-18.61	-7.92	-5.76	-5.75
18	-3961.01	8945.35	-1279.76	-170.71	-63.47	-16.40	-11.17	-8.60	-8.07
19	-5692.13	2382.07	-1785.35	239.69	-55.93	-15.56	-1.99	-2.54	-3.26
20	-12024.63	1281.32	-3488.16	89.30	-77.93	-18.75	-5.39	-6.89	-7.25

Figure 4-17. Bending Moment Summary Following Time-Variant Trim.

ROTOR NUMBER 1 CHRD BENDING MOMENTS INCH-POUNDS

SINE COMPONENTS

STATION / HARMONIC	STEADY	1/REV	2/REV	3/REV	4/REV	5/REV	6/REV	7/REV	8/REV
1	0.0	-165.90	29.10	4.33	0.13	-0.13	0.15	0.17	0.07
2	0.0	-576.44	104.74	15.78	0.64	-0.47	0.55	0.62	0.26
3	0.0	-1088.96	203.45	30.75	1.42	-0.91	1.07	1.22	0.51
4	0.0	-1647.03	311.53	47.29	2.37	-1.39	1.62	1.88	0.78
5	0.0	-2241.22	429.02	65.16	3.40	-1.92	2.22	2.59	1.08
6	0.0	-2893.03	555.60	84.77	4.75	-2.49	2.85	3.38	1.40
7	0.0	-3612.11	695.45	106.44	6.37	-3.12	3.54	4.25	1.77
8	0.0	-4440.96	848.57	130.59	8.46	-3.81	4.29	5.22	2.18
9	0.0	-5405.71	1014.50	156.93	10.73	-4.60	5.08	6.26	2.61
10	0.0	-6498.38	1191.95	184.88	13.01	-5.45	5.92	7.35	3.08
11	0.0	-7721.16	1377.17	214.55	15.58	-6.35	6.80	8.51	3.57
12	0.0	-9079.72	1573.54	245.73	18.13	-7.33	7.73	9.70	4.08
13	0.0	-10594.44	1778.71	278.69	20.87	-8.37	8.69	10.95	4.61
14	0.0	-12277.00	1994.37	313.38	23.70	-9.49	9.70	12.25	5.17
15	0.0	-14141.52	2221.31	349.78	26.58	-10.67	10.77	13.60	5.76
16	0.0	-16208.02	2458.19	388.05	29.55	-11.95	11.87	15.00	6.36
17	0.0	-18541.97	2703.31	427.78	32.51	-13.33	12.99	16.41	6.98
18	0.0	-21541.33	2956.54	470.07	35.89	-14.87	14.13	17.83	7.62
19	0.0	-27685.54	3337.05	529.89	39.44	-19.04	13.94	18.83	7.87
20	0.0	-31361.32	3615.95	577.25	44.66	-21.18	14.64	20.23	8.46

COSINE COMPONENTS

STATION / HARMONIC	STEADY	1/REV	2/REV	3/REV	4/REV	5/REV	6/REV	7/REV	8/REV
1	30.16	238.42	6.34	-29.03	-0.99	0.39	-0.51	-0.38	-0.29
2	122.27	865.36	24.63	-107.26	-3.79	1.47	-1.86	-1.41	-1.08
3	247.71	1678.66	48.46	-211.46	-7.63	2.96	-3.64	-2.76	-2.11
4	390.90	2578.54	75.04	-326.67	-11.98	4.60	-5.62	-4.25	-3.25
5	538.95	3547.73	101.38	-452.45	-16.80	6.42	-7.76	-5.89	-4.49
6	719.67	4612.86	133.17	-589.75	-22.27	8.39	-10.11	-7.67	-5.85
7	917.54	5787.84	166.06	-742.38	-28.56	10.59	-12.71	-9.65	-7.35
8	1162.92	7100.82	206.83	-910.51	-35.79	12.97	-15.58	-11.82	-9.01
9	1421.68	8548.48	248.67	-1089.51	-43.71	15.41	-18.68	-14.18	-10.81
10	1679.11	10093.96	289.84	-1276.11	-51.98	17.85	-21.95	-16.65	-12.70
11	1977.81	11746.55	340.03	-1468.80	-60.67	20.27	-25.36	-19.22	-14.67
12	2265.49	13494.17	386.82	-1667.90	-69.74	22.67	-28.92	-21.89	-16.72
13	2585.24	15350.00	440.95	-1872.21	-79.17	24.98	-32.63	-24.67	-18.86
14	2912.40	17335.83	496.13	-2081.80	-88.99	27.22	-36.48	-27.54	-21.09
15	3246.50	19423.78	553.02	-2296.33	-99.12	29.36	-40.48	-30.51	-23.39
16	3597.36	21641.69	613.87	-2514.09	-109.56	31.33	-44.61	-33.57	-25.77
17	3946.18	23978.27	674.64	-2728.40	-120.16	32.93	-48.81	-36.65	-28.19
18	4340.58	26555.81	746.59	-2921.83	-130.98	33.36	-52.96	-39.63	-30.56
19	3646.18	30658.99	465.80	-3110.25	-157.44	29.61	-58.86	-44.04	-34.38
20	3899.27	33673.41	458.05	-3317.31	-174.55	29.42	-63.59	-47.51	-37.18

Figure 4-17. Continued.

ROTOR NUMBER 1 TORS BENDING MOMENTS INCH-POUNDS

SINE COMPONENTS

STATION / HARMONIC	STEADY	1/REV	2/REV	3/REV	4/REV	5/REV	6/REV	7/REV	8/REV
1	0.0	-557.94	-58.18	1.52	9.40	-0.34	-1.23	-0.06	-0.00
2	0.0	-1113.80	-116.13	3.03	18.77	-0.67	-2.46	-0.12	-0.00
3	0.0	-1664.73	-173.53	4.53	28.05	-1.00	-3.67	-0.18	-0.00
4	0.0	-2207.36	-229.96	6.01	37.17	-1.33	-4.86	-0.24	-0.01
5	0.0	-2692.47	-280.31	7.34	45.31	-1.62	-5.93	-0.29	-0.01
6	0.0	-3009.06	-313.20	8.20	50.63	-1.82	-6.63	-0.32	-0.01
7	0.0	-3280.52	-341.38	8.94	55.19	-1.98	-7.22	-0.35	-0.01
8	0.0	-3519.49	-366.11	9.59	59.19	-2.12	-7.75	-0.38	-0.01
9	0.0	-3729.76	-387.75	10.16	62.70	-2.25	-8.21	-0.40	-0.01
10	0.0	-3930.63	-408.30	10.71	66.03	-2.37	-8.64	-0.42	-0.01
11	0.0	-4152.38	-430.72	11.32	69.67	-2.50	-9.12	-0.45	-0.01
12	0.0	-4339.66	-449.58	11.84	72.73	-2.62	-9.52	-0.47	-0.01
13	0.0	-4504.38	-466.13	12.29	75.43	-2.71	-9.87	-0.48	-0.01
14	0.0	-4657.59	-481.50	12.72	77.93	-2.81	-10.20	-0.50	-0.01
15	0.0	-4785.18	-494.33	13.07	80.01	-2.88	-10.48	-0.51	-0.01
16	0.0	-4883.31	-504.39	13.33	81.64	-2.94	-10.69	-0.52	-0.01
17	0.0	-4974.58	-513.78	13.58	83.16	-3.00	-10.89	-0.53	-0.01
18	0.0	-5060.18	-522.58	13.82	84.58	-3.05	-11.08	-0.54	-0.01
19	0.0	-5135.16	-530.30	14.02	85.83	-3.09	-11.24	-0.55	-0.01
20	0.0	-5201.57	-537.13	14.20	86.94	-3.13	-11.38	-0.56	-0.01

COSINE COMPONENTS

STATION / HARMONIC	STEADY	1/REV	2/REV	3/REV	4/REV	5/REV	6/REV	7/REV	8/REV
1	272.92	208.53	-43.00	14.81	-14.20	-1.16	-0.03	-0.09	-0.09
2	544.81	416.28	-85.83	29.57	-28.35	-2.31	-0.07	-0.19	-0.18
3	814.14	622.18	-128.25	44.20	-42.37	-3.46	-0.10	-0.28	-0.26
4	1078.98	824.99	-169.97	58.61	-56.15	-4.58	-0.13	-0.37	-0.35
5	1315.24	1006.30	-207.24	71.48	-68.46	-5.59	-0.16	-0.45	-0.43
6	1469.38	1124.62	-231.64	79.89	-76.49	-6.25	-0.18	-0.50	-0.48
7	1601.38	1226.08	-252.58	87.10	-83.38	-6.81	-0.19	-0.55	-0.52
8	1717.21	1315.38	-270.98	93.44	-89.43	-7.31	-0.21	-0.59	-0.56
9	1818.64	1393.96	-287.11	99.03	-94.73	-7.74	-0.22	-0.63	-0.59
10	1914.96	1469.02	-302.45	104.36	-99.77	-8.16	-0.23	-0.66	-0.62
11	2020.37	1551.09	-319.20	110.25	-105.27	-8.62	-0.25	-0.69	-0.66
12	2109.03	1621.88	-333.31	115.22	-109.91	-9.01	-0.26	-0.72	-0.68
13	2184.84	1683.43	-345.70	119.60	-113.98	-9.35	-0.27	-0.75	-0.71
14	2259.09	1740.68	-357.22	123.66	-117.76	-9.66	-0.27	-0.78	-0.73
15	2319.35	1788.34	-366.84	127.05	-120.91	-9.93	-0.28	-0.80	-0.75
16	2366.32	1824.96	-374.39	129.67	-123.38	-10.13	-0.29	-0.81	-0.77
17	2410.14	1859.01	-381.44	132.11	-125.68	-10.32	-0.29	-0.83	-0.78
18	2451.22	1890.94	-388.03	134.39	-127.83	-10.50	-0.30	-0.84	-0.80
19	2487.27	1918.91	-393.80	136.39	-129.72	-10.65	-0.30	-0.85	-0.81
20	2519.25	1943.68	-398.90	138.16	-131.39	-10.79	-0.31	-0.87	-0.82

Figure 4-17. Continued.

ROTOR NUMBER 1SUMMARY INCH POUNDS

	MEAN BENDING MOMENT					CHORD BENDING MOMENT				
STATION	OSCILLATORY	MAXIMUM	AZ	MINIMUM	AZ	OSCILLATORY	MAXIMUM	AZ	MINIMUM	AZ
1	369.74	339.85	280.	-399.63	110.	302.71	303.69	310.	-301.73	130.
2	1007.26	922.66	280.	-1081.67	110.	1081.56	1099.69	320.	-1063.43	130.
3	1582.27	1477.62	280.	-1686.93	110.	2079.69	2126.53	320.	-2032.85	130.
4	2261.32	2125.33	280.	-2397.31	110.	3177.69	3262.47	320.	-3092.92	130.
5	3091.42	2931.53	280.	-3251.32	110.	4356.09	4474.69	320.	-4237.50	130.
6	3946.39	3773.17	280.	-4119.61	110.	5650.15	5826.83	320.	-5473.47	130.
7	4375.42	4175.07	280.	-4475.78	110.	7078.04	7317.11	320.	-6838.97	130.
8	3950.62	3886.71	280.	-4014.52	100.	8690.52	9025.76	320.	-8355.27	130.
9	3367.39	3375.53	280.	-3359.26	100.	10499.62	10930.02	320.	-10069.21	130.
10	3183.36	3239.04	280.	-3126.88	100.	12471.70	12981.46	320.	-11961.95	130.
11	3428.12	3477.60	280.	-3378.64	100.	14615.43	15235.76	320.	-13995.11	130.
12	4017.86	4012.48	280.	-4023.24	100.	16924.52	17629.85	320.	-16219.18	130.
13	5047.03	4899.46	280.	-5194.60	110.	19430.95	20243.28	310.	-18618.63	130.
14	6778.21	6336.84	290.	-7219.59	110.	22150.93	23075.53	310.	-21226.34	130.
15	9532.42	8523.98	290.	-10540.86	120.	25084.40	26117.00	310.	-24051.80	130.
16	13355.75	11491.90	290.	-15219.60	120.	28257.89	29405.00	310.	-27110.77	130.
17	17247.26	14303.13	290.	-20191.39	120.	31708.83	32960.42	310.	-30457.23	130.
18	18397.07	14467.30	290.	-22326.84	130.	35821.13	37213.29	310.	-34429.02	130.
19	7777.31	3168.90	280.	-12385.66	140.	43301.72	43713.38	310.	-42890.10	130.
20	6076.79	-5240.16	270.	-17393.75	170.	48180.00	48569.80	310.	-47795.02	130.

	TORSIONAL BENDING MOMENT				
STATION	OSCILLATORY	MAXIMUM	AZ	MINIMUM	AZ
1	565.85	533.62	290.	-258.07	90.
2	1189.48	1063.75	290.	-515.21	90.
3	1777.83	2785.42	290.	-770.23	90.
4	2357.27	3692.66	290.	-1021.89	90.
5	2875.73	4503.08	290.	-1247.38	90.
6	3213.29	5032.04	290.	-1394.53	90.
7	3503.13	5495.43	290.	-1520.83	90.
8	3758.24	5884.07	290.	-1632.41	90.
9	3962.68	6234.23	290.	-1731.12	90.
10	4197.03	6568.02	290.	-1826.04	90.
11	4433.55	6935.23	290.	-1931.88	90.
12	4633.28	7244.91	290.	-2021.65	90.
13	4808.93	7517.67	290.	-2100.79	90.
14	4972.29	7770.07	290.	-2174.52	90.
15	5108.34	7980.88	290.	-2235.81	90.
16	5213.05	8143.91	290.	-2282.20	90.
17	5310.45	8295.68	290.	-2325.22	90.
18	5401.78	8438.00	290.	-2365.57	90.
19	5481.80	8562.73	290.	-2400.87	90.
20	5552.64	8673.24	290.	-2432.09	90.

Figure 4-17. Concluded.

0.0 SECONDS MANEUVER TIME 0.699 MINUTES ELAPSED COMPUTING TIME

----WEIGHTS-----	POUNDS	CENTER OF GRAVITY (IN) S.L.	B.L.	W.L.
BASIC A/C	7000.	193.00	0.0	75.00
STORES	2415.			
TOTAL	9415.	194.86	-0.00	70.56

	POWER/TORQUE SHAFT HORSEPOWER	TORQUE FT-LB	SPEED RPM	BLADE TIP SPEED	ADV RLD MACH NO	INERTIA SLUG-FT-SQ	JET THRUST LBS	
MAIN	573.33	9292.1	324.1	747.	0.819	1411.807	RT	0.0
TAIL	14.85	47.1	1656.6	737.	0.811	1.398	LT	0.0
ENG	588.19	9532.9	6600.0					
REQD	588.19	9532.9						

BODY REFERENCE

	U	V	W	P	Q	R	BORWT
VELOCITY	168.332	0.168	-12.290	0.0	0.0	0.0	0.0
ACCEL.	0.0	0.0	0.0	0.0	0.0	0.0	0.0

------FLIGHT PATH CONDITION-------		
TRUE AIRSPEED	(KNOTS)	100.00
GROUND SPEED	(KNOTS)	100.00
RATE OF CLIMB	(FT/SEC)	0.0
CLIMB ANGLE	(DEG)	0.0
HEADING ANGLE	(DEG)	0.0
ANGLE OF ATTACK	(DEG)	-4.18
ANGLE OF SIDESLIP	(DEG)	0.06
ANGLE OF AERO YAW	(DEG)	-0.06
ACCELERATIONS VERT	(G)	1.00
FWD	(G)	0.07
LAT	(G)	-0.01

AERODYNAMIC SURFACES

SURFACE	ANGLE OF INCIDENCE	FLAP ANGLE	WIND AXIS COEF CL	CD	CM	AERODYNAMIC ANGLE ATTACK	SIDESLIP
NO. 1	6.56	0.0	-0.1805	0.0120	0.0571	-2.89	0.06
NO. 2	6.56	0.0	-0.1805	0.0120	0.0571	-2.89	0.06
NO. 3	4.50	0.0	0.0993	0.0118	-0.0157	3.48	-4.18
NO. 4	0.0	0.0	0.0	0.0	0.0	0.0	0.0
RT WING	14.00	0.0	0.5112	0.0498	0.0	8.41	0.40
LT WING	14.00	0.0	0.5105	0.0497	0.0	8.40	-0.29

GROUND REFERENCE

	EULER ANGLES TO BODY REFERENCE PSI	THETA	PHI	DISPLACEMENTS X	Y	Z		
VELOCITY	0.0	0.0	0.0	168.780	0.0	0.0	DISTANCE	0.0
LOCATION	0.0	-4.176	-0.781	0.0	0.0	-1000.000	ALTITUDE	1000.0

CONTROL DISPLACEMENTS		---PERCENT---	SWASH PLATE ANGLE (DEGREES) MAIN ROTOR COLL	F/A	LAT	TAIL ROTOR COLL	F/A	LAT
COLL	(UP)	19.78	13.15	0.0	0.0	0.0	0.0	0.0
F/A CYC	(FWD)	54.21	0.0	1.44	0.0	0.0	0.0	0.0
LAT CYC	(RT)	54.00	0.0	0.0	-1.19	0.0	0.0	0.0
PEDAL	(LT)	34.05	0.0	0.0	0.0	2.68	0.0	0.0
SUM OF PYLON AND SCAS			0.0	0.0	0.0	0.0	0.0	0.0
TOTAL SWASH PLATE ANG			13.15	1.44	-1.19	2.68	0.0	0.0

HUB-MAST-PYLON		(MAIN)	(TAIL)
DELTA 3	(DEG)	0.0	30.0
PHASING	(DEG)	0.0	0.0
HUB SPRING MOMENT	F/A	0.	0.
	(FT-LB) LAT	0.	0.
PYLON DEFLECTION	F/A	0.0	0.0
	(DEG) LAT	0.0	0.0
MAST ANGLE (DEG)	F/A	0.0	0.0
	LAT	0.0	90.00

ROTORS

	BLADE FEATHERING - DEG MEAN	PSI=0	PSI=90	FLAPPING - DEG F/A	LAT	FORCES (SHAFT AXIS) POUNDS THRUST	H-FORCE	Y-FORCE	ADVANCE RATIO	CP X10**5	CT X10**4	INDUCED VELOCITY
MAIN	13.15	1.19	-1.44	0.315	-0.287	9312.98	139.42	-211.16	0.226	20.957	46.209	8.47
TAIL	2.68	0.0	0.0	1.764	0.003	278.44	14.88	-4.35	0.229	15.107	37.960	6.78

	BETA PSI (DEG)	HUB (DEG)	LIMIT (DEG)	SHAFT AXIS DATA AT ROTOR HUB VELOCITIES (FT/SEC) U	V	W	SHEAR FORCES (POUNDS) X	Y	Z	MAST WIND-UP DISP (DEG)	RATE (DEG/SEC)	GUSTS AT CG (FT/SEC)	
MAIN	0.0	0.01	12.00	168.33	0.17	-12.29	-106.7	-12.7	-22995.3	0.0	0.0	FWD	0.0
TAIL	0.0	0.42	11.00	168.33	12.29	-0.13	14.9	-4.3	278.4	0.0	0.0	LAT	0.0
												VERT	0.0

Figure 4-18. Maneuver-Time-Point Printout Page.

4.7.2 Time-Point Page

The format of and data on the maneuver-time-point page are identical to those of the standard trim page with the following exceptions. The problem identification data, trim condition specification, and atmospheric parameters are omitted; some data in the aerodynamic surfaces printout are changed; and some data are added at the top of the page and to the torque/power data, body and ground reference parameters, and rotor parameter printouts. The added data are discussed below.

4.7.1.1 Identification

The first line of the maneuver-time-point page contains the current time in the maneuver and the total elapsed computer CPU time.

4.7.2.2 Physical and Power Parameters

The first data group printed is identical to the physical and power parameter printout of the standard trim page except that the engine power and torque required to drive the rotor at that particular instant are added in the row labeled "REQD." If rotor rpm is variable, a difference between engine power supplied and required will cause a rate of change of the rotational speed of the rotors. If rotor rpm is held constant, a difference between these two powers indicates that the rotor power required has exceeded the maximum available engine power. Note that the rotor torque is the air-load torque on the appropriate rotor and that the rotor power is that required to drive the rotor at that particular instant in the maneuver.

4.7.2.3 Body Reference Data

In the body reference data printout, the three body linear accelerations in feet per second squared and the body angular accelerations in degrees per second squared are added to the printout. Also, the velocity and acceleration of the collective bobweight are included. Since the bobweight equation is written in terms of collective pitch angles, the parameters are angular velocity and acceleration in degrees per second and degrees per second squared, respectively.

4.7.2.4 Flight Path/Aerodynamic Surface Parameters

The printout of the flight path and aerodynamic surface parameters is the same as on the standard trim page except that the body axis X, Y, and Z aerodynamic forces acting on the aerodynamic surfaces are changed to nondimensional lift, drag, and pitching moment coefficients in the wind axis reference system. The body axis X, Y, and Z forces are available from the force and moment summary which immediately follows the time-point page.

4.7.2.5 Ground Reference Parameters

The ground reference parameter printout is the same as on the standard trim page with the following data added: the X, Y, and Z displacement of the rotorcraft center of gravity from the origin of the ground reference system, the distance of the cg from the origin of the ground reference system as measured in the ground X-Y plane, and geometric altitude of the cg (the negative of the ground reference Z location). All these added data are in feet. Note that in the ground reference system, all maneuvers start with X = Y = 0 and Z = -(geometric altitude).

4.7.2.6 Flight and Rotor Controls Parameters

The printout of the flight and rotor controls parameters is identical to that on the standard trim page.

4.7.2.7 Rotor Parameters

The rotor parameters printout on the time-point page includes all data shown on the standard trim page plus additional rotor and mast data and the values of the gusts at the rotorcraft cg.

"PSI (DEG)" is the azimuth location of Blade No. 1 of each rotor. "BETA" refers to blade flapping at the hub with respect to the shaft reference X-Y plane. "HUB" is the flapping angle at the hub for Blade No. 1 at its present azimuth. This number should correspond to a test measurement of flapping. "LIMIT" is the present location of the flapping stop. The "SHAFT AXIS DATA AT ROTOR HUB" are self-explanatory.

Mast windup and mast windup rate are given in degrees and degrees per second, respectively. Positive mast windup is in the direction of positive rotor rotation.

The forward, lateral, and vertical components of the gust velocities at the center of gravity are in body reference and have the units of feet per second.

4.7.3 Force and Moment Summary

The maneuver-time-point page is followed by a force and moment summary for that time point. The format of the summary is identical to the summary printed during trim iterations.

4.7.4 Rotor Elastic Response (Figure 4-19)

The azimuth location of each blade is given for reference. The instantaneous values of the generalized coordinates for each blade and each mode are available for detailed study. The three components of blade

**** MAIN ROTOR ****

VARIABLE	BLADE 1	BLADE 2	BLADE 3	BLADE 4	BLADE 5	BLADE 6	BLADE 7
AZIMUTH	15.000	195.000	0.0	0.0	0.0	0.0	0.0
GEN.COORD.MODE 1	-0.132	0.132	0.0	0.0	0.0	0.0	0.0
GEN.COORD.MODE 2	0.024	-0.024	0.0	0.0	0.0	0.0	0.0
GEN.COORD.MODE 3	-0.003	0.003	0.0	0.0	0.0	0.0	0.0
GEN.COORD.MODE 4	-0.161	-0.161	0.0	0.0	0.0	0.0	0.0
GEN.COORD.MODE 5	0.006	0.006	0.0	0.0	0.0	0.0	0.0
GEN.COORD.MODE 6	0.0	0.0	0.0	0.0	0.0	0.0	0.0
TIP DEFL.OUT-OF-PLANE	-0.294	-0.331	0.0	0.0	0.0	0.0	0.0
TIP DEFL.INPLANE	0.023	-0.025	0.0	0.0	0.0	0.0	0.0
TIP TWIST DEFL.	0.671	0.876	0.0	0.0	0.0	0.0	0.0
VERTICAL SHEAR AT HUB	3772.729	5091.375	0.0	0.0	0.0	0.0	0.0
INPLANE SHEAR AT HUB	249.596	-213.241	0.0	0.0	0.0	0.0	0.0
LOADS AT R = 66.0 IN							
BEAM BENDING MOMENT	803.443	-1729.723	0.0	0.0	0.0	0.0	0.0
CHORD BENDING MOMENT	28652.313	-27358.074	0.0	0.0	0.0	0.0	0.0
TORSIONAL MOMENT	1938.353	2531.701	0.0	0.0	0.0	0.0	0.0

Figure 4-19. Rotor Elastic Response During Maneuver.

tip deflection provide the user with a clear indication of the overall rotor behavior. The out-of-plane and inplane deflections are in feet, and the elastic twist deflection is in degrees.

4.7.4.1 Blade Shear Forces

The out-of-plane components of shear are given for each blade in pounds. This shows how the blades share the total shear forces given above in the rotor variables.

4.7.4.2 Bending Moments at User Selected Location

At one radial station selected by the user, XMR(15) or XTR(15), the computer program calculates and prints the beamwise bending moment, the chordwise bending moment, and the torsional moment for each blade in inch-pounds. The beam and chord moments have been resolved through the geometric pitch from the out-of-plane and inplane directions so that the values printed should correspond directly to test data.

4.8 TIME HISTORY PLOTS (Figure 4-20)

4.8.1 Problem Identification

The same problem identification used for the trim pages (CARDS 02, 03, and 04) is used as the heading for the time history plots.

4.8.2 Variables Plotted and Their Scales

The plot symbols used are the numbers 1, 2, and 4. The variable corresponding to each symbol and its units are printed as part of the plot heading. If two or all three of the curves intersect at a single point, the symbol printed is the sum of the individual symbols. For example, the symbol 7(= 1 + 2 + 4) means that all three curves pass through the point where the 7 is printed.

The lower and upper limits on the plot scale are given for each variable plotted. The scale in units per inch is also given.

4.8.3 General Comments

The user is again cautioned that the automatic plot scaling procedure may expand small variations completely out of proportion to their true importance. Be certain to check the scales on all plots.

The maneuver time is printed along the side of the plot to provide an easy reference to the corresponding maneuver-time-point page. If the time increment is changed at some point during a maneuver, there will be a change in the time scale at this point. The resulting compression or

BELL HELICOPTER COMPANY
ROTORCRAFT FLIGHT SIMULATION PROGRAM AGAJ73

3 0 MODEL 209 AH-1G HUEYCOBRA WITH 4 M200A1 RKT LAUNCHERS
19 RKTS EACH INBOARD STORE; 14 RKTS EACH OUTBOARD STORE
V = 100 KTAS ASYMMETRIC STORE DROP OF OUTBOARD POD SLS

SYMBOL 1 = P-DOT ACCEL, BODY AXES, DEG/SEC/SEC
SYMBOL 2 = P VELOCITY, BODY AXES, DEG/SEC
SYMBOL 4 = ROLL ANGLE, FIXED/BODY, DEG

SCALE	1	FROM	-50.000	TO	50.000,	1 INCH =	10.000	3 FOR 1 + 2	ON SAME PRINT POS.
SCALE	2	FROM	-10.000	TO	10.000,	1 INCH =	2.000	5 FOR 1 + 4	ON SAME PRINT POS.
SCALE	4	FROM	-20.000	TO	0.0 ,	1 INCH =	2.000	6 FOR 2 + 4	ON SAME PRINT POS.
								7 FOR 1 + 2 + 4	ON SAME PRINT POS.

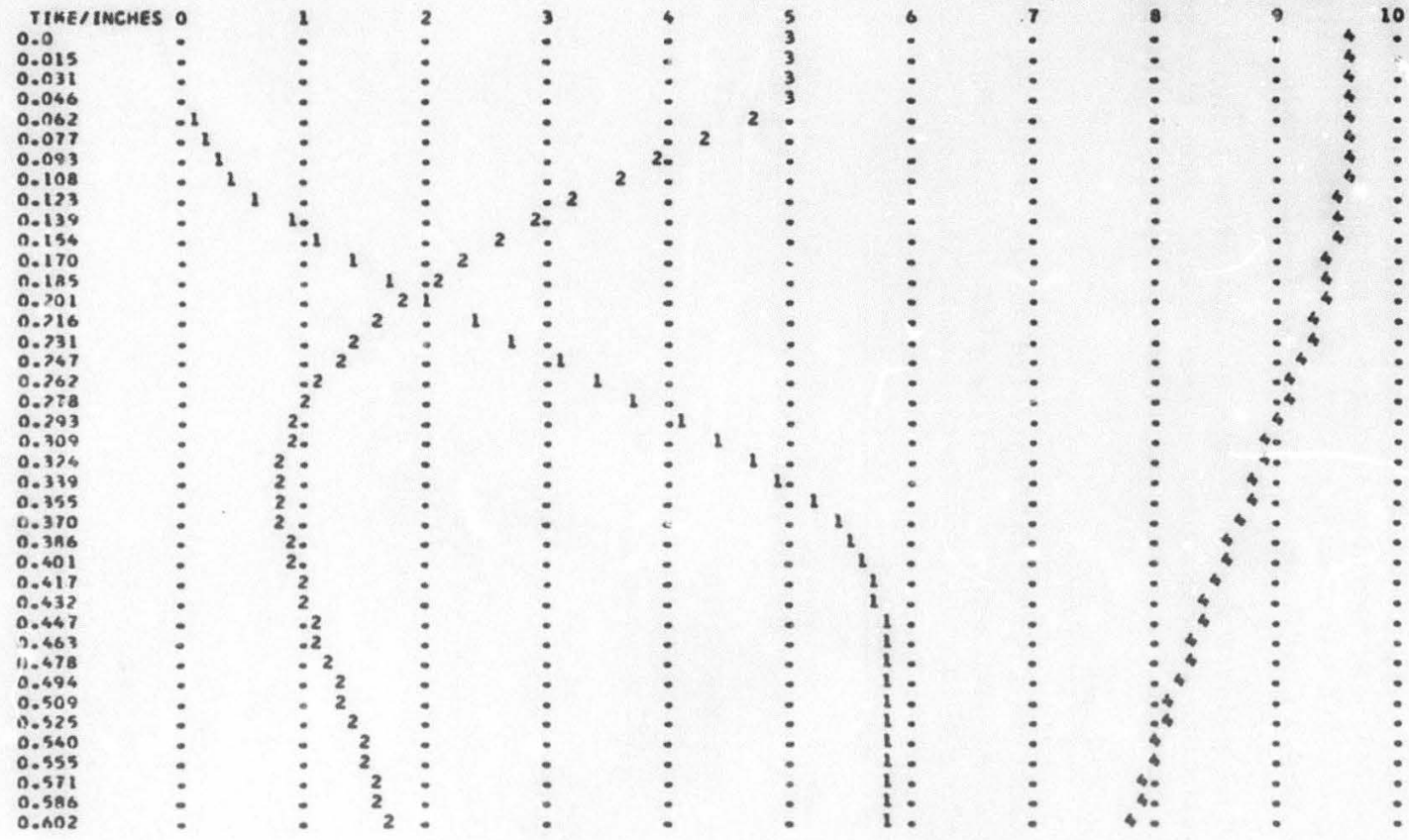

Figure 4-20. Example Time History Plot.

expansion of the time scale may cause apparent discontinuities in the data which are not actually in the data. The user should check the time scale carefully.

Each plot card, Card 402, is independent of all other plot cards. Thus, if desired, one variable may be plotted on more than one plot. One example which has proved useful is rotor azimuth position. This variable will help in pointing out any change in time scale.

The dots printed down the page are spaced at 1-inch intervals to make it easier to read the plot values by eye. They also provide reference lines to help see slower variations on long time histories.

4.8.4 CALCOMP Plots

The names of the variables plotted appear at the top of each CALCOMP page along with their respective plot symbols. The vertical scales and the plots themselves are identified by the plot symbols.

4.9 OUTPUT OF HARMONIC ANALYSIS ROUTINE (Figure 4-21)

This program option gives a harmonic analysis (frequency vs. amplitude function) for selected variables from a set of maneuver data.

4.9.1 Printed Output

4.9.1.1 Variable Identification

At the head of each page of harmonic analysis data, an identifying phrase and units for the variable analyzed are printed.

4.9.1.2 Frequency-Amplitude Table

The frequency and amplitude data are presented in three pairs of columns. The frequency is given in cycles per second, and the amplitude is in the units given in the heading.

4.9.2 CALCOMP Output

An amplitude versus frequency plot generated by the harmonic analysis routine consists of the tabulated points connected by straight-line segments. The zero value or steady component is always plotted as zero. The actual value is then given at the bottom of the page unless it is too big for the CALCOMP to handle. The variable identification with units also is given at the bottom of the page.

TIP DEFL.OUT-OF-PLANE.ROTOR 1.BLADE 1.FT

FREQUENCY	AMPLITUDE	FREQUENCY	AMPLITUDE	FREQUENCY	AMPLITUDE
0.0	-0.1732119E 00	0.2160397E 02	0.1447395E-02	0.4320796E 02	0.7168993E-03
0.2700498E 01	0.6391782E-02	0.2430447E 02	0.1233378E-02	0.4590845E 02	0.6898337E-03
0.5400995E 01	0.1301637E 00	0.2700497E 02	0.1076742E-02	0.4860895E 02	0.6669601E-03
0.8101493E 01	0.8338809E-02	0.2970546E 02	0.9594769E-03	0.5130945E 02	0.6498108E-03
0.1080199E 02	0.5474197E-01	0.3240596E 02	0.8946278E-03	0.5400995E 02	0.6342942E-03
0.1350249E 02	0.4959792E-02	0.3510646E 02	0.8279551E-03	0.5671045E 02	0.6234550E-03
0.1620297E 02	0.2060029E-02	0.3780696E 02	0.7834765E-03	0.5941093E 02	0.6163369E-03
0.1890347E 02	0.1501872E-02	0.4050746E 02	0.7459356E-03	0.6211143E 02	0.6110028E-03

TIP DEFL. INPLANE.ROTOR 1.BLADE 1.FT

FREQUENCY	AMPLITUDE	FREQUENCY	AMPLITUDE	FREQUENCY	AMPLITUDE
0.0	0.9108516E-03	0.2160397E 02	0.4314734E-03	0.4320796E 02	0.1868709E-03
0.2700498E 01	0.2339984E-03	0.2430447E 02	0.3352126E-03	0.4590845E 02	0.1792855E-03
0.5400995E 01	0.5935387E-01	0.2700497E 02	0.2869286E-03	0.4860895E 02	0.1732698E-03
0.8101493E 01	0.3836700E-02	0.2970546E 02	0.2584199E-03	0.5130945E 02	0.1684462E-03
0.1080199E 02	0.4474949E-02	0.3240596E 02	0.2375331E-03	0.5400995E 02	0.1648898E-03
0.1350249E 02	0.1194750E-02	0.3510646E 02	0.2206120E-03	0.5671045E 02	0.1622075E-03
0.1620297E 02	0.9352285E-03	0.3780696E 02	0.2065392E-03	0.5941093E 02	0.1603565E-03
0.1890347E 02	0.4220537E-03	0.4050746E 02	0.1956455E-03	0.6211143E 02	0.1592222E-03

TIP TWIST DEFL..ROTOR 1.BLADE 1.DEG

FREQUENCY	AMPLITUDE	FREQUENCY	AMPLITUDE	FREQUENCY	AMPLITUDE
0.0	0.7505412E 00	0.2160397E 02	0.3253098E-01	0.4320796E 02	0.6312009E-02
0.2700498E 01	0.1790778E-01	0.2430447E 02	0.1701685E-01	0.4590845E 02	0.5950391E-02
0.5400995E 01	0.1764976E 01	0.2700497E 02	0.1287528E-01	0.4860895E 02	0.5679026E-02
0.8101493E 01	0.1135214E-01	0.2970546E 02	0.1063171E-01	0.5130945E 02	0.5464040E-02
0.1080199E 02	0.1552761E 00	0.3240596E 02	0.8990034E-02	0.5400995E 02	0.5315295E-02
0.1350249E 02	0.6189531E-01	0.3510646E 02	0.8050524E-02	0.5671045E 02	0.5201347E-02
0.1620297E 02	0.3178247E-01	0.3780696E 02	0.7252209E-02	0.5941093E 02	0.5114220E-02
0.1890347E 02	0.2552937E-01	0.4050746E 02	0.6711245E-02	0.6211143E 02	0.5067956E-02

BEAM BEND.MOMENT.ROTOR 1.BLADE 1.IN-LB

FREQUENCY	AMPLITUDE	FREQUENCY	AMPLITUDE	FREQUENCY	AMPLITUDE
0.0	-0.3524443E 03	0.2160397E 02	0.2068360E 03	0.4320796E 02	0.1385446E 03
0.2700498E 01	0.1221450E 03	0.2430447E 02	0.1392669E 03	0.4590845E 02	0.1389183E 03
0.5400995E 01	0.9636477E 04	0.2700497E 02	0.1342701E 03	0.4860895E 02	0.1391967E 03
0.8101493E 01	0.1527980E 03	0.2970546E 02	0.1359700E 03	0.5130945E 02	0.1394046E 03
0.1080199E 02	0.5509558E 03	0.3240596E 02	0.1364055E 03	0.5400995E 02	0.1395968E 03
0.1350249E 02	0.3590620E 03	0.3510646E 02	0.1369324E 03	0.5671045E 02	0.1397106E 03
0.1620297E 02	0.2444045E 03	0.3780696E 02	0.1375730E 03	0.5941093E 02	0.1397776E 03
0.1890347E 02	0.9619183E 02	0.4050746E 02	0.1380395E 03	0.6211143E 02	0.1398288E 03

Figure 4-21. Output of Harmonic Analysis Routine.

4.10 VECTOR ANALYSIS DATA (Figure 4-22)

This program option gives a vector analysis (least-squared-errors curve fit) of selected variables from a set of maneuver data.

4.10.1 Curve-Fit Analysis

4.10.1.1 Problem Identification

This output is the same as the headings printed for the trim page(s) and time history plots.

4.10.1.2 Curve-Fit Heading

The maneuver time at which the curve fit starts is given. All time points prior to this time are disregarded by the curve-fit procedure. The frequency used in the curve fit, OMEGA, is given in cycles per second. The curve-fit function, F(T), is expressed in general form:

F(T) = AMPLITUDE * SIN(OMEGA * T + PHASE ANGLE) + CONSTANT

(where T is time as measured during the maneuver).

4.10.1.3 Variable, Amplitude, Phase Angle, and Constant

Below the general equation are five columns as follows:

(1) Variable: In this column the variable being curve fit is identified, and its units are given.

(2) Amplitude: This number may be substituted into the general equation for AMPLITUDE. The units are those given under VARIABLE.

(3) Phase Angle: This number may be substituted into the general equation for PHASE ANGLE. The units are degrees as labeled.

(4) Constant: This quantity may also be substituted directly into the general equation. The units are those given under VARIABLE.

(5) Coef of Corr: This denotes coefficient of correlation and is a measure of how well the variable considered is fit by a sinusoidal variation at the frequency selected. A number greater than 0.95 in this column indicates a reasonably good fit. A number smaller is generally caused by another frequency content or transient condition.

LEAST SQUARES CURVE FIT STARTING AFTER 0.400 SECONDS MANEUVER TIME

F(T) = AMPLITUDE*SIN(OMEGA*T + PHASE ANGLE) + CONSTANT WITH OMEGA =10.000 CPS

VARIABLE	AMPLITUDE	PHASE ANGLE (DEGREES)	CONSTANT	COEF OF CORR
ROTOR1 THRUST, LB	843.64	153.46	6783.7	0.92978
ROTOR1 H-FORCE, LB	178.97	-140.74	727.25	0.98119
ROTOR1 V-FORCE, LB	141.86	147.45	-143.47	0.95706

AMPLITUDE AND PHASE ANGLE COMPARISONS

VARIABLES		AMPLITUDE RATIO	PHASE ANGLE DIFFERENCE
ROTOR1 H-FORCE, LB	/ ROTOR1 THRUST, LB	0.20723	-294.20
ROTOR1 V-FORCE, LB	/ ROTOR1 THRUST, LB	0.16426	-6.0058

VARIABLE "A" AS A LINEAR COMBINATION OF VARIABLES "B" AND "C".

A = KB*B + KC*C + KD

VARIABLE	NAME	COEFFICIENT
A	ROTOR1 THRUST, LB	
B	ROTOR1 H-FORCE, LB	0.53146
C	ROTOR1 V-FORCE, LB	5.0450
	CONSTANT	9159.8

Figure 4-22. Vector Analysis Data.

4.10.2 Amplitude and Phase Angle Comparisons

At the top of the following page the problem identification is repeated.

The magnitudes and phase angles between variable vectors are compared for selected pairs of variables. The variables compared are labeled as VARIABLE A/VARIABLE B. The variable identifications used are the same as those used on the previous page and for the plot headings. The amplitude ratio printed is AMPLITUDE A divided by AMPLITUDE B. The phase angle difference is PHASE ANGLE A minus PHASE ANGLE B.

4.10.3 Variable "A" as a Linear Combination of Variables "B" and "C"

Following the amplitude and phase angle comparisons, the program skips to the top of the next page and again prints the problem identification heading.

If all the selected variables are viewed as vectors rotating at the same rotational speed, OMEGA, any one variable may be expressed as a linear combination of two other variables and a constant as long as the phase angle between the two variables is not 0 or 180 degrees. This relationship is given generally in the heading as "A = KB * B + KC * C + KD."

Here A, B, and C are the variables concerned. The variable identification phrase is printed for each in the output. KB, KC, and KD are constants determined by the program and printed in the column labeled "COEFFICIENT." In this row for variable B, the coefficient is KB; in the row for variable C, the coefficient is KC; and in the unlabeled variable row, which has the word CONSTANT to the right of the row, the coefficient is KD.

4.10.4 Time Used

At the completion of the vector analysis routine, the time used in the vector analysis process is printed along with the total elapsed computing time.

4.11 OUTPUT OF STABILITY ANALYSIS ROUTINE

The operation of the stability analysis routine (STAB) depends on the numerical evaluation of a number of partial derivatives. The partial derivatives appear in the equations of motion for the rotorcraft. A frequency analysis is made on the equations of motion with controls fixed and following step inputs to the controls. As used here, "s" is the Laplace operator.

4.11.1 Control Partial Derivative Matrices (Figure 4-23)

4.11.1.1 Force and Moment Derivatives

The first version of the control partial derivative matrix is printed with units of pounds per inch or foot-pounds per inch. The response to each of the fourteen degrees of freedom available in STAB is evaluated and ratioed to be the response to a 1-inch step input from each of the four controls. If the rotor degrees of freedom are not turned on and the rotor hub is not rigid, the rotor flapping angles are changed to reduce the rotor flapping moments to less than the allowable error.

4.11.1.2 Control Derivatives in Terms of Accelerations

The second version of the control partial derivative matrix contains the same information as the first. In this matrix, the force and moment derivatives have been divided by the appropriate masses or inertias to give the units of linear or angular acceleration per inch of control. These numbers may be thought of as the accelerations at the instant immediately after a step input from the controls. The same labels are used for the rows of the second matrix as for the first.

4.11.1.3 Conventional Fixed-Wing Nondimensional Derivatives

If the rotorcraft does not have a wing or the airspeed is less than 1.0 knot, this matrix is not printed. The reader is referred to Etkin, Reference 2, for the nondimensionalizing factors and interpretation of the first six rows of the third matrix. No attempt will be made to interpret or explain the last eight rows of this matrix because conventional fixed-wing concepts do not apply to helicopter rotors and pylons.

4.11.2 Partial Derivatives for Stability Analysis Degrees of Freedom

The next pages of output contain detailed information used for the calculation of the partial derivatives for each degree of freedom which is activated in STAB. The partial derivatives are evaluated in the same order as the variables are listed below. See Figure 4-24.

4.11.2.1 Stability Analysis Degrees of Freedom

At the top of each partial derivative page is a list of the current value of each of the possible degrees of freedom. All "FUS" (fuselage) parameters are in the body reference system and all "M.R." and "T.R." (rotor) parameters are in the appropriate shaft reference system. By a comparison of two successive pages, it is possible to tell which variable is being perturbed and by how much. The 22 variables which may be perturbed are perturbed in the following order:

CONTROL PARTIAL DERIVATIVE MATRICES

POUNDS/INCH OR FOOT-POUNDS/INCH

	COLLECTIVE	F/A CYCLIC	LAT CYCLIC	PEDAL
X-FORCE	-187.0	410.6	9.400	-21.96
Y-FORCE	-87.82	41.81	260.6	368.2
Z-FORCE	-4791.	1905.	205.3	-3.230
YAW MOM	4464.	86.40	-381.8	-0.1007E 05
PITCH MOM	1705.	-2932.	-119.7	451.1
ROLL MOM	-556.6	271.2	1777.	1500.

FT/SEC**2 OR RAD/SEC**2 PER INCH

	COLLECTIVE	F/A CYCLIC	LAT CYCLIC	PEDAL
X-FORCE	-0.6389	1.403	0.3212E-01	-0.7505E-01
Y-FORCE	-0.3001	0.1429	0.8904	1.258
Z-FORCE	-16.37	6.508	0.7315	-0.1104E-01
YAW MOM	0.3659	0.7160E-02	-0.3164E-01	-0.8344
PITCH MOM	0.1322	-0.2268	-0.9257E-02	0.3489E-01
ROLL MOM	-0.1451	0.7067E-01	0.4631	0.3910

CONVENTIONAL FIXED WING NON-DIMENSIONAL DERIVATIVES

	COLLECTIVE	F/A CYCLIC	LAT CYCLIC	PEDAL
X-FORCE	-0.1986	0.4361	0.5983E-02	-0.2533E-01
Y-FORCE	-0.9327E-01	0.4440E-01	0.2767	0.3910
Z-FORCE	-5.088	2.023	0.2180	-0.3430E-02
YAW MOM	0.4548	0.8801E-02	-0.3989E-01	-1.026
PITCH MOM	0.6808	-1.168	-0.4767E-01	0.1797
ROLL MOM	-0.5670E-01	0.2762E-01	0.1810	0.1528

Figure 4-23. Control Partial Derivative Matrix From STAB.

FUS. U = 169.33170 FUS. W = -7.29075 FUS. Q = -0.00054 FUS. V = 0.16751 FUS. P = -0.00039 FUS. R = -0.00019

M.R. F/A PYLON RATE =	0.0	M.R. LAT PYLON RATE =	0.0	T.R. F/A PYLON RATE =	0.0	T.R. LAT PYLON RATE =	0.0
M.R. F/A FLAP. RATE =	-0.0040	M.R. LAT FLAP. RATE =	-0.0069	T.R. F/A FLAP. RATE =	-0.0009	T.R. LAT FLAP. RATE =	-0.0263
M.R. F/A PYLON DISP =	0.0	M.R. LAT PYLON DISP =	0.0	T.R. F/A PYLON DISP =	0.0	T.R. LAT PYLON DISP =	0.0
M.R. F/A FLAP. DISP =	0.3147	M.R. LAT FLAP. DISP =	-0.2869	T.R. F/A FLAP. DISP =	1.7639	T.R. LAT FLAP. DISP =	0.0031

	THRUST	M-FORCE	Y-FORCE	TORQUE	IND. V.	JET THRUST	
MAIN ROTOR	10551.	158.	-233.	9053.	9.555	RIGHT/CENTER	0.
TAIL ROTOR	278.	15.	-4.	47.	6.762	LEFT	0.

FORCE AND MOMENT SUMMARY

	X-FORCE	Y-FORCE	Z-FORCE	ROLL	PITCH	YAW
FUSELAGE	-296.3	6.7	172.9	-2.7	37.8	-343.3
MAIN ROTOR	-158.2	-233.5	-10551.4	-1596.4	-3437.2	100.0
TAIL ROTOR	-15.0	277.6	4.1	1098.7	171.2	-7557.4
RIGHT WING	-50.8	-16.9	-279.8	-897.2	30.4	161.1
LEFT WING	-50.8	17.0	-279.4	896.0	30.4	-161.0
STABILIZER #1	4.2	0.0	61.4	113.1	1111.4	-7.8
STABILIZER #2	4.2	0.0	61.4	-112.9	1110.9	7.6
STABILIZER #3	-7.8	58.9	-0.3	67.3	1.3	-1533.2
JETS AND GUNS	0.0	0.0	0.0	0.0	0.0	0.0
STORE/BRAKE #1	-36.7	-0.1	2.0	10.2	-34.2	183.6
STORE/BRAKE #2	-36.7	-0.1	2.0	7.3	-37.3	130.1
STORE/BRAKE #3	-36.7	-0.1	2.0	-7.1	-37.3	-129.9
STORE/BRAKE #4	-36.7	-0.1	2.0	-10.1	-34.2	-183.4
GROSS WEIGHT	685.6	-128.0	9388.7			
M.R. TORQUE				296.2	-114.3	9052.9
T.R. TORQUE				0.0	46.8	-9.0
TOTAL	-31.8	-18.4	-1414.2	-137.8	-1154.2	-280.7

DELTA

FORCE AND MOMENT SUMMARY

	X-FORCE	Y-FORCE	Z-FORCE	ROLL	PITCH	YAW
FUSELAGE	2.9	2.2	-22.5	1.0	285.2	-0.9
MAIN ROTOR	-18.8	-22.3	-1238.0	-152.4	-401.7	9.5
TAIL ROTOR	-0.1	-0.8	-0.2	-2.9	-6.0	21.7
RIGHT WING	-3.8	-16.9	-41.9	-134.5	7.3	11.9
LEFT WING	-3.8	17.0	-41.9	134.4	7.2	-11.9
STABILIZER #1	-4.9	-0.0	-29.9	-55.0	-514.0	9.0
STABILIZER #2	-4.9	-0.0	-29.9	55.0	-513.8	-8.9
STABILIZER #3	-0.1	2.7	0.2	2.1	5.1	-68.3
JETS AND GUNS	0.0	0.0	0.0	0.0	0.0	0.0
STORE/BRAKE #1	0.4	-0.0	-1.1	-5.4	-0.9	-2.0
STORE/BRAKE #2	0.4	-0.0	-1.1	-3.8	-1.7	-1.4
STORE/BRAKE #3	0.4	-0.0	-1.1	3.8	-1.7	1.4
STORE/BRAKE #4	0.4	-0.0	-1.1	5.4	-0.9	2.0
GROSS WEIGHT	0.0	0.0	0.0			
M.R. TORQUE				16.2	-8.2	-239.6
T.R. TORQUE				0.0	-0.3	0.0
TOTAL	-31.9	-18.3	-1408.5	-136.1	-1144.6	-277.5

Figure 4-24. Example of Partial Derivatives for STAB Degrees of Freedom.

FUS. U = velocity in the X direction (feet per second)

FUS. W = velocity in the Z direction (feet per second)

FUS. Q = pitch rate (degrees per second)

FUS. V = velocity in the Y direction (feet per second)

FUS. P = roll rate (degrees per second)

FUS. R = yaw rate (degrees per second)

M.R. F/A PYLON RATE = (degrees per second)

M.R. LAT PYLON RATE = (degrees per second)

T.R. F/A PYLON RATE = (degrees per second)

T.R. LAT PYLON RATE = (degrees per second)

M.R. F/A FLAP. RATE = (degrees per second)

M.R. LAT FLAP. RATE = (degrees per second)

T.R. F/A FLAP. RATE = (degrees per second)

T.R. LAT FLAP. RATE = (degrees per second)

M.R. F/A PYLON DISP = (degrees)

M.R. LAT PYLON DISP = (degrees)

T.R. F/A PYLON DISP = (degrees)

T.R. LAT PYLON DISP = (degrees)

M.R. F/A FLAP. DISP = (degrees)

M.R. LAT FLAP. DISP = (degrees)

T.R. F/A FLAP. DISP = (degrees)

T.R. LAT FLAP. DISP = (degrees)

4.11.2.2 Rotor Performance

These two rows are identical to those described in the discussion of the trim iteration page, Section 4.4.2

4.11.2.3 Force and Moment Summary

This block of output is the same as described in Section 4.4.3. The forces and moments printed here are computed after the small increment in the pertinent variable has been made. All data are in the body reference system.

4.11.2.4 Delta Force and Moment Summary

This block of output presents the changes in the force and moment contributions in exactly the same format as the full force and moment summary. Each number in this block is obtained by taking the corresponding value from the force and moment summary immediately above less the corresponding value at the trim condition or at the current maneuver time point.

4.11.3 Stability Partial Derivative Matrices

4.11.3.1 Rotor Partial Derivative Matrix (Figure 4-25)

On this page is printed a summary of the rotor partial derivatives computed from the data on the previous pages. Each row gives the partial derivatives of some force, moment, or flapping angle as labeled, with respect to the linear and angular velocities U, W, Q, V, P, and R. The units are feet, pounds, radians, and seconds.

4.11.3.2 Total Partial Derivative Matrix (Figure 4-25)

On this page is printed a summary of the partial derivatives computed from the data on the previous pages. Each row gives the partial derivatives of some force or moment, as labeled, with respect to the perturbation variables used.

4.11.4 Mass, Damping, and Stiffness Matrices (Figure 4-26)

The mass, damping, and stiffness matrices which are used to calculate the rotorcraft stability characteristics are printed on the next three pages. The reader is referred to Volume I for the analytical background of these three matrices.

If IPL(33) = 1 or 2, these three matrices will be punched on cards. The punched output is headed by an identification card which consists of the IPSN input from CARD 01, the date, plus rotorcraft gross weight, cg stationline, ground speed, and ambient temperature. Since the matrices are sparse, only the nonzero elements are punched. The format of the matrix element card is:

Column	
1	Matrix Indicator (I1)
7-8	Row Number of element (I2)
9-10	Column Number of element (I2)
12-25	Value of the element specified above (E15.8)
27-28	Row
29-30	Column

ROTOR PARTIAL DERIVATIVE MATRICES

	U	W	Q	V	P	R
			MAIN ROTOR			
THRUST	14.846	247.60	-1646.6	5.4039	1565.6	-660.70
H-FORCE	3.4066	3.7588	-664.96	-0.47848	362.64	1.4075
F/A FLAPPING	0.22121E-03	0.52032E-03	-0.10607	0.26783E-04	0.37770E-01	0.22342E-02
V-FORCE	-1.4472	-4.4582	-246.74	-2.5897	-543.15	19.197
TORQUE	10.663	-47.916	1565.9	-1.1547	-3386.3	-1165.9
LAT FLAPPING	-0.75299E-04	0.59841E-03	-0.33799E-01	-0.18500E-03	-0.87342E-01	-0.26628E-03
			TAIL ROTOR			
THRUST	0.52690	-0.16108	-10.498	-8.9790	-11.606	322.57
H-FORCE	0.10300	0.21331E-01	0.19621	-0.40564	0.80765	5.6061
F/A FLAPPING	0.13417E-03	0.0	0.0	-0.51431E-03	0.13206E-01	-0.20443E-01
V-FORCE	-0.39035E-01	0.47069E-01	1.4161	0.15758	8.0982	-7.4317
TORQUE	-0.99725E-01	-0.57916E-01	-2.2504	0.93013	9.6808	-19.530
LAT FLAPPING	-0.94603E-04	0.0	0.0	-0.22854E-04	0.29350E-01	0.45120E-02

	U	W	Q	V	P	R
X-FORCE	-10.741	-6.3812	596.41	0.20629	-354.75	-14.319
Z-FORCE	-22.514	-281.71	1240.6	-5.8198	-1518.2	645.91
PITCH MOMENT	-11.310	-228.92	-10598.	-13.402	2269.5	206.52
Y-FORCE	0.61603E-01	-3.6533	-244.03	-35.926	-559.78	473.23
ROLL MOMENT	-5.2287	-27.227	-1678.8	-10.741	-3793.7	1527.3
YAW MOMENT	-29.898	-55.506	1616.6	167.78	-2699.8	-13322.

Figure 4-25. Rotor and Total Partial Derivative Matrices.

MASS MATRIX

	U DOT	W DOT	Q DOT	V DOT	P DOT	R DOT
X-FORCE	292.65	0.0	0.0	0.0	0.0	0.0
Z-FORCE	0.0	292.91	0.0	0.0	0.0	0.0
PITCH MOMENT	0.0	4.4603	12930.	0.0	0.0	0.0
Y-FORCE	0.0	0.0	0.0	292.65	0.0	0.0
ROLL MOMENT	0.0	0.0	0.0	0.0	3836.8	-969.48
YAW MOMENT	0.0	0.0	0.0	0.0	-969.48	12068.

DAMPING MATRIX

	U	W	Q	V	P	R
X-FORCE	10.741	6.3784	-4193.3	0.0	0.0	0.0
Z-FORCE	27.517	281.71	-50634.	0.0	0.0	0.0
PITCH MOMENT	11.310	228.92	10598.	0.0	0.0	0.0
Y-FORCE	0.0	0.0	0.0	35.926	4156.7	48920.
ROLL MOMENT	0.0	0.0	0.0	10.741	3793.7	-1527.3
YAW MOMENT	0.0	0.0	0.0	-167.78	2699.7	-13322.

STIFFNESS MATRIX

	X	Z	THETA	Y	PHI	PSI
X-FORCE	0.0	0.0	9388.7	0.0	0.0	0.0
Z-FORCE	0.0	0.0	-685.63	0.0	0.0	0.0
PITCH MOMENT	0.0	0.0	0.0	0.0	0.0	0.0
Y-FORCE	0.0	0.0	0.0	0.0	-9388.7	685.63
ROLL MOMENT	0.0	0.0	0.0	0.0	0.0	0.0
YAW MOMENT	0.0	0.0	0.0	0.0	0.0	0.0

ROOTS

REAL	IMAG	TAU	DAMP	PERIOD	TIME TO HALF-DBL	CYCL HALF	TO BL	UNDAMPED NAT FREQ RAD/SEC	CPS	DAMPING RATIO
-1.0684	0.0	0.0	0.93602	0.0	0.649	0.		1.07	0.170	0.0
0.169500-01	0.0	0.0	-59.348	0.0	41.137	0.		0.168E-01	0.268E-02	0.0
-0.61617	1.4687	0.39422	0.48581	4.278	1.125	0.	3	1.59	0.253	0.38687
-0.174590-01	0.663250-01	212.60	7.4233	94.734	39.702	0.	9	0.686E-01	0.109E-01	0.25456
-0.97141	1.7348	0.25916	0.47759	3.622	0.752	0.	8	1.96	0.313	0.46907

Figure 4-26. Stability Matrices and Stick-Fixed Stability Results.

Column	
32-45	Value
47-48	Row
49-50	Column
52-65	Value
66-80	Date and Ground Speed

Values of the matrix indicator are

= 0 for stiffness matrix

= 1 for damping matrix

= 2 for mass matrix

The matrix indicator and each row and column number are integer inputs (I-format). The values of the elements are in scientific notation (E-format). Each matrix begins on a new card. An end-of-data card (I punched 20 times) follows the last card of the last matrix.

4.11.5 Stick-Fixed Stability Results (Figure 4-26)

The system characteristic equation, with controls fixed, is solved for its complex roots and associated response modes. These results are presented in several ways as discussed below.

4.11.5.1 Roots

The real and imaginary parts of the roots of the characteristic equation are printed under the headings REAL and IMAG. The units are radians per second. If z is the response of some mode, the response expression may be written directly in terms of the real and imaginary parts.

$$z = Ae^{(REAL*t)} \cos (IMAG*t) = A (REAL + IMAG*j)$$

where t = time

A = constant (dependent on initial condition)

In terms of the damping ratio, ζ, damped natural frequency, ω_d, and undamped natural frequency, ω_n, the printed roots are

$$REAL = \zeta\omega_n$$

$$IMAG = \omega_d = \omega_n \sqrt{1 - \zeta^2}$$

The roots may also be used to form the denominator, d(s), of the frequency response polynomial.

$$d(s) = \prod_{i=1}^{n} \left[(s - REAL_i + IMAG_i*j)(s - REAL_i - IMAG_i*j)\right]$$

where s = Laplace operator

Π = continued product notation

$j = \sqrt{-1}$

N = number of roots printed

i = sequence number of root in printout

Note that in the case of complex conjugate parts of roots, only the root with the positive imaginary part is printed.

4.11.5.2 Terms in Denominator of Laplace Transfer Function

Each root or pair of roots generates the terms in one factor of the denominator of the Laplace transfer function, D(s).

$$D(s) = \prod_{i=1}^{n} (TAU_i*s^2 + DAMP_i*s + 1)$$

where

$$TAU_i = 1/(REAL_i^2 + IMAG_i^2) = 1/\omega_n^2$$

$$DAMP_i = -2*REAL_i/(REAL_i^2 + IMAG_i^2) = -2\zeta/\omega_n$$

and Π, N, and i are as defined in the previous section.

4.11.5.3 Period

For the oscillatory roots of the characteristic equation, the period of the damped oscillation is given in seconds.

$$PERIOD = 2\pi/IMAG$$

For the roots with a zero imaginary part, the period is a meaningless concept, so a zero appears in the output.

4.11.5.4 Rate of Convergence or Divergence

The column headed "TIME TO HALF-DBL" depends only on the value of the real part of the root. If the real part is negative, the time to half amplitude, in seconds, is printed. If the real part is positive, the time to double amplitude, in seconds, is printed.

TIME TO HALF-DBL = ln(.5)/REAL

The column headed "CYCLES TO HALF-DBL" contains the number of cycles to half or double amplitude based on the damped natural frequency (IMAG) for the oscillatory roots.

CYCLES TO HALF-DBL = (TIME TO HALF-DBL)/PERIOD

For aperiodic roots, a zero is printed.

4.11.5.5 Undamped Natural Frequency and Damping Ratio

The undamped natural frequency, ω_n, is based on the absolute value of the complex root.

$$\omega_n = \sqrt{REAL^2 + IMAG^2}$$

Thus, ω_n is defined even for an aperiodic root. The calculated value of ω_n is given both in radians per second and cycles per second. The damping ratio, ζ, in combination with the undamped natural frequency, completely describes the root.

$$\zeta = REAL/\omega_n$$

For a stable aperiodic root, the damping ratio is one. For an unstable aperiodic root, the damping ratio is minus one.

4.11.5.6 Stability Mode Shapes (Figure 4-27)

In the stability mode shape printout, each column represents one mode. The first column on the left is associated with the first root printed, the second with the second, and so forth. Each component of a mode shape has a relative magnitude (MAGN) and a phase angle (PHASE). As implied by the column heading, magnitude is the top number of the pairs printed out and phase angle is the bottom. The normal printout provides for eight columns (mode shapes of roots). If more than eight roots are computed, the additional roots are printed in the same format on additional page(s). Columns after the last root are set to zero.

NORMALIZED WRT THETA

FUSELAGE	MAGN PHASE	MAGN PHASE	MAGN PHASE	MAGN PHASE	MAGN PHASE	MAGN PHASE	MAGN PHASE	MAGN PHASE
U	0.3732 0.0	6.164 0.0	0.3567 95.06	2.789 103.5	0.1644 38.04	0.0 0.0	0.0 0.0	0.0 0.0
W	0.2725E-01 180.0	0.3429 180.0	1.546 -124.7	0.1562 -75.85	1.154 29.31	0.0 0.0	0.0 0.0	0.0 0.0
THETA	1.000 0.0	1.000 0.0	1.000 0.0	1.000 0.0	1.000 0.0	0.0 0.0	0.0 0.0	0.0 0.0
BETA	0.1350E 24 0.0	0.9513E 21 180.0	0.1620E 25 -26.60	0.2227E-22 142.0	0.4887E-22 -53.80	0.0 0.0	0.0 0.0	0.0 0.0
PHI	0.9738E 24 180.0	0.1924E 23 180.0	0.1692E 24 103.9	0.2447E-21 121.2	0.6618E-23 137.2	0.0 0.0	0.0 0.0	0.0 0.0
PSI	0.1389E 24 0.0	0.1144E 24 180.0	0.1567E 25 149.8	0.1226E-20 36.96	0.4614E-22 123.3	0.0 0.0	0.0 0.0	0.0 0.0

NORMALIZED WRT PHI

FUSELAGE	MAGN PHASE	MAGN PHASE	MAGN PHASE	MAGN PHASE	MAGN PHASE	MAGN PHASE	MAGN PHASE	MAGN PHASE
U	0.3333E-24 180.0	0.3204E-21 180.0	0.2108E-23 -8.802	0.1140E 23 -17.73	0.2484E 23 -99.11	0.0 0.0	0.0 0.0	0.0 0.0
W	0.2798E-25 0.0	0.1782E-22 0.0	0.9139E-23 131.5	0.6383E 21 162.9	0.1744E 24 -107.8	0.0 0.0	0.0 0.0	0.0 0.0
THETA	0.1327E-23 180.0	0.5198E-22 180.0	0.5910E-23 -103.9	0.4086E 22 -121.2	0.1511E 24 -137.2	0.0 0.0	0.0 0.0	0.0 0.0
BETA	0.1396 180.0	0.4945E-01 0.0	9.573 -130.5	0.9100E-01 20.74	7.385 169.0	0.0 0.0	0.0 0.0	0.0 0.0
PHI	1.000 0.0	1.000 0.0	1.000 0.0	1.000 0.0	1.000 0.0	0.0 0.0	0.0 0.0	0.0 0.0
PSI	0.1426 180.0	5.946 0.0	9.262 45.91	5.008 -84.29	6.972 -13.83	0.0 0.0	0.0 0.0	0.0 0.0

Figure 4-27. Examples of Mode Shapes of Stability Results.

The mode shapes associated with the rotorcraft characteristic roots are first printed as normalized with respect to THETA, then as normalized with respect to PHI, and lastly as normalized with respect to the largest participation factor (variable). In all three sets of normalized mode shapes, the normalizing variable always has a magnitude of 1.000 (nondimensional) and a phase angle of 0.0 degrees. The fuselage degrees of freedom used for the mode shapes are not the same as those used in the rest of the stability analysis. The following variables are used:

U/VELOCITY = $\Delta u/V$ = perturbation velocity in X-direction divided by total velocity (nondimensional)

ALPHA = $\Delta w/V$ = perturbation velocity in Z-direction divided by total velocity (nondimensional); approximately the same as angle of attack (radians)

THETA = $\int q\,dt$ = the integral of the pitch rate (radians); approximately the same as pitch angle

BETA = $\Delta v/V$ = perturbation velocity in Y-direction divided by total velocity (radians); approximately the same as sideslip angle

PHI = $\int p\,dt$ = integral of roll rate (radians); approximately the same as roll angle

PSI = $\int r\,dt$ = integral of yaw rate (radians); approximately the same as yaw angle

If activated, the pylon and flapping variables are all given as angular displacements in radians.

4.11.6 <u>Transfer Function Numerator</u> (Figure 4-28)

Following the mode shapes, the numerators of the transfer function for pitch, roll, and yaw as a function of their respective primary controls are printed. In each of the three numerators printed, the value labeled "GAIN" is the constant term in the frequency response polynomial; "STATIC GAIN" is the gain term to be used in the Laplace transfer function.

The complex roots of the frequency response polynomial are printed in two pairs of columns labeled "ROOTS." To the right of the real and imaginary roots are the corresponding values in the numerator of the Laplace transfer function, "TAU" and "DAMP." The numerator of the Laplace transfer function N(s), may be written as follows:

$$N(s) = \text{STATIC GAIN} * \prod_{k=1}^{M} (TAU_k * s^2 + DAMP_k * s + 1)$$

and the frequency response polynomial as

TRANSFER FUNCTION NUMERATOR

THETA/FORE-AND-AFT CYCLIC GAIN = 0.22900E 00 STATIC GAIN = 0.60584E 00

ROOTS				ROOTS			
REAL	IMAG	TAU	DAMP	REAL	IMAG	TAU	DAMP
0.16950E-01	0.0	0.0	-59.348	-1.0684	0.0	0.0	0.93602
-0.61617	1.4687	0.39422	0.48581	-1.4641	0.0	0.0	0.68300
-0.32796E-01	0.0	0.0	30.492				

PHI/LATERAL CYCLIC GAIN = -0.46455E 00 STATIC GAIN = 0.33254E 00

ROOTS				ROOTS			
REAL	IMAG	TAU	DAMP	REAL	IMAG	TAU	DAMP
-0.13312E-01	0.0	0.0	75.120	-0.60323	1.4463	0.40726	0.49132
-0.17459E-01	0.66325E-01	212.60	7.4233	-0.92141	1.7348	0.25916	0.47759

PSI/PEDAL GAIN = 0.81963E 00 STATIC GAIN = 0.22231E 01

ROOTS				ROOTS			
REAL	IMAG	TAU	DAMP	REAL	IMAG	TAU	DAMP
0.23733	0.0	0.0	-4.2136	-0.58903	0.0	0.0	1.6977
-0.38601	0.0	0.0	1.1287	-0.17459E-01	0.66325E-01	212.60	7.4233
-0.92141	1.7348	0.25916	0.47759				

Figure 4-28. Numerator of Transfer Function.

$$n(s) = (GAIN) * \prod_{k=1}^{M} [(s\text{-}REAL_k + IMAG_k * j)(s\text{-}REAL_k - IMAG_k * j)]$$

where k = sequence number of root
M = total number of roots printed

The complete transfer function, G(s), can then be formed as either

$$G(s) = N(s)/D(s)$$

or

$$G(s) = n(s)/d(s)$$

where D(s) and d(s) are the denominator of the transfer function and the frequency response polynominal discussed in Section 4.11.5.2.

4.11.7 Frequency Response (Figure 4-29)

Following the transfer function numerator printout, the frequency response of the three transfer functions is tabulated. The data listed are the frequency in Hertz and radians per second, the gain in the decibel equivalent of a magnitude in degrees per inch of control, and the phase in degrees. The range of frequencies is 0.01 to 100 radians per second. With these data, construction of a Bode plot for each transfer function is greatly simplified.

4.12 BLADE ELEMENT AERODYNAMIC DATA

Blade element aerodynamic data are printed for the rotor(s) specified by NVARC (CARD 01) at the points in the run specified by the value of IPL(27) in conjunction with the times in the Blade Element Printout Times Group. A set of aerodynamic data is composed of blocks of data where each block presents data at twenty blade radial stations for one blade of one rotor at a single blade azimuth location. The printout of the set of data blocks precedes the maneuver time point page with which it is associated. When NVARC specifies that data for both rotors are to be printed, the data for the main rotor (Rotor 1) precedes that for the tail rotor (Rotor 2).

The number of data blocks included in the printout for one rotor depends on which rotor analysis (time-variant or quasi-static) is active for the rotor in question at the time of printout. When the time-variant rotor analysis is active, the number of blocks also depends on the number of blades on the rotor while the format of each block depends on which, if either, of the unsteady aerodynamic options is active.

If the quasi-static rotor analysis is active for a rotor when aerodynamic data are to be printed, the set of data printed for that rotor consists of a data block for each of twelve azimuth locations (30-degree increments)

FREQUENCY RESPONSE

FREQUENCY (HZ)	FREQUENCY (RAD/SEC)	THETA/FORE-AND-AFT GAIN(DB)	THETA/FORE-AND-AFT PHASE(DEG)	PHI/LATERAL GAIN(DB)	PHI/LATERAL PHASE(DEG)	PSI/PEDAL GAIN(DB)	PSI/PEDAL PHASE(DEG)
0.0016	0.0100	31.358	12.74	66.232	157.07	80.801	-60.92
0.0020	0.0125	31.653	15.53	64.502	169.10	78.274	-55.44
0.0025	0.0160	32.156	19.04	62.607	-177.10	75.252	-49.05
0.0032	0.0200	32.843	22.39	60.888	-164.83	72.300	-43.32
0.0040	0.0250	33.845	25.53	59.143	-153.35	69.148	-37.98
0.0050	0.0320	34.980	27.41	57.690	-144.85	66.442	-34.11
0.0056	0.0350	36.231	27.92	56.442	-138.40	64.079	-31.28
0.0064	0.0400	37.583	26.89	55.346	-133.38	61.990	-29.23
0.0080	0.0500	40.505	18.94	53.488	-126.20	58.438	-26.51
0.0095	0.0600	43.165	-0.17	51.948	-121.39	55.507	-25.37
0.0111	0.0700	43.931	-28.87	50.635	-118.03	53.029	-24.37
0.0127	0.0800	42.414	-52.62	49.490	-115.60	50.895	-24.14
0.0159	0.1000	38.372	-73.59	47.562	-112.46	47.386	-24.48
0.0199	0.1250	34.812	-81.47	45.619	-110.39	43.998	-25.61
0.0255	0.1600	31.586	-84.78	43.447	-109.23	40.462	-27.57
0.0318	0.2000	29.387	-85.86	41.461	-109.16	37.528	-29.70
0.0398	0.2500	26.842	-86.11	39.443	-109.99	34.909	-31.86
0.0477	0.3000	25.144	-86.00	37.761	-111.33	33.040	-33.45
0.0557	0.3500	23.786	-85.78	36.307	-112.94	31.672	-34.61
0.0637	0.4000	22.666	-85.54	35.018	-114.69	30.653	-35.50
0.0796	0.5000	20.911	-85.15	32.762	-118.32	29.319	-36.94
0.0955	0.6000	19.603	-85.01	30.859	-121.90	28.587	-38.47
0.1114	0.7000	18.602	-85.20	29.149	-125.31	28.228	-40.51
0.1273	0.8000	17.826	-85.79	27.596	-128.46	28.112	-43.26
0.1592	1.0000	16.741	-88.34	24.839	-133.41	28.286	-51.49
0.1949	1.2500	15.892	-94.50	21.905	-139.19	28.031	-67.75
0.2546	1.6000	14.855	-108.61	18.564	-144.93	27.743	-98.30
0.3183	2.0000	12.896	-128.34	15.367	-150.83	24.398	-120.61
0.3979	2.5000	9.342	-147.74	11.857	-156.35	19.824	-144.91
0.4775	3.0000	5.733	-158.90	8.938	-160.15	16.032	-153.99
0.5573	3.5000	2.573	-165.12	6.384	-162.90	12.930	-159.24
0.6366	4.0000	-0.140	-168.61	4.146	-164.58	10.123	-162.65
0.7957	5.0000	-4.540	-172.75	0.367	-167.93	6.130	-166.84
0.9549	6.0000	-8.016	-174.71	-2.747	-169.91	2.743	-169.35
1.1141	7.0000	-10.986	-175.85	-5.392	-171.34	-0.050	-171.02
1.2732	8.0000	-13.334	-176.58	-7.691	-172.41	-2.444	-172.23
1.5915	10.0000	-17.363	-177.47	-11.542	-173.92	-6.409	-173.67
1.9874	12.5000	-21.339	-178.08	-15.402	-175.13	-10.341	-175.13
2.5465	16.0000	-25.696	-178.55	-19.679	-176.19	-14.669	-176.22
3.1831	20.0000	-29.612	-178.67	-23.549	-176.95	-18.567	-176.99
3.9789	25.0000	-33.514	-179.10	-27.422	-177.56	-22.458	-177.59
4.7746	30.0000	-36.694	-179.26	-30.587	-177.97	-25.633	-178.00
5.5704	35.0000	-39.381	-179.37	-33.263	-178.26	-28.315	-178.28
6.3662	40.0000	-41.706	-179.45	-35.582	-178.48	-30.638	-178.50
7.9577	50.0000	-45.588	-179.56	-39.458	-178.76	-34.518	-178.80
9.5493	60.0000	-48.759	-179.63	-42.624	-178.98	-37.687	-179.00
11.1408	70.0000	-51.439	-179.69	-45.302	-179.13	-40.366	-179.14
12.7324	80.0000	-53.760	-179.73	-47.421	-179.24	-42.686	-179.25
15.9155	100.0000	-57.638	-179.78	-51.497	-179.39	-46.564	-179.40

Figure 4-29. Frequency Response of Transfer Functions.

of a representative blade. If the time-variant rotor analysis is active, the set of data for the rotor consists of one data block for each blade at the azimuth angle corresponding to the maneuver time point, i.e., two to seven data blocks.

The data blocks consist of six parameters which are independent of blade radial station and nine or fourteen parameters which can vary with radial station. The printout includes nine parameters when the unsteady aerodynamic options are turned off; when either unsteady option is active, five additional parameters are included. Of these five additional parameters, three are the same regardless of which option is active while the remaining two are a function of the active option. All parameters are defined in Table 4-4.

Figure 4-30 contains examples of blade element aerodynamic data printout. The data are for a two-bladed time-variant rotor with the unsteady aerodynamic option off, the BUNS option on, and the UNSAN option on.

4.13 BLADE ELEMENT BENDING MOMENT DATA

When the time-variant rotor analysis is active, a tabulation of the instantaneous values of beam, chord, and torsional moments at each radial station on each blade is printed at the times specified in the Blade Element Printout Times Group. NVARC on CARD 01 specifies the rotor(s) to be included in the printout. Data are printed at twenty radial stations with Station 19 (95 percent radius) printed first and Station 0 (the root) last. Station 20 is omitted from the printout since all moments are defined to be zero at the tip. The units for all three moments are inch-pounds. Figure 4-31 is an example of the printout for one rotor. The printout of this data follows rotor elastic response (Figure 4-19) of the time point with which it is associated. If data for both rotors are to be printed, the main rotor (Rotor 1) is printed first.

It is emphasized that this bending moment data is only printed for a rotor which uses time-variant analysis; if NVARC specifies that data be printed for a rotor which uses the quasi-static analysis, the program ignores the input and does not print any moment data.

TABLE 4-4. DEFINITIONS OF BLADE ELEMENT AERODYNAMIC PARAMETERS

Parameters Which are Independent of Radial Station
(All six parameters included in each printout)

Name	Description	Units
PSI	Azimuth location of blade	deg
U-HUB	Shaft reference X component of velocity at rotor hub	ft/sec
V-HUB	Shaft reference Y component of velocity at rotor hub	ft/sec
W-HUB	Shaft reference Z component of velocity at rotor hub	ft/sec
GEO. PITCH	Geometric blade pitch angle at Station 0 (root) for azimuth location PSI	deg
BETA (HUB)	Flapping angle at the hub (i.e., the angle between the shaft reference X-Y plane and the blade pitch change axis at Station 0) for azimuth location PSI	deg

Parameters Which Are Dependent on Radial Station

Name	Printout Code *	Description	Units
STA	A	Blade station number starting at tip (Station 20) and continuing to the 5% radius (Station 1)	-
UT	A	Tangential component of the total local velocity, i.e., component which is perpendicular to the local pitch change axis and parallel to the local chord line	ft/sec
UP	A	Perpendicular component of the total velocity, i.e., component which is perpendicular to both the local pitch change axis and the local chord line	ft/sec
UR	A	Radial component of the total local velocity, i.e., component which is parallel to the local pitch change axis	ft/sec
MACH	A	Local Mach number	-
ALPHA	A	Local angle of attack	deg

TABLE 4-4. Continued.

Name	Printout Code *	Description	Units
CL	A	Total local lift coefficient including unsteady aerodynamics effects if any	-
DCL	B	Increment to local steady-state lift coefficient from the BUNS option; included in the value of CL	-
CDR	U	Radial component of drag coefficient from the UNSAN option	-
CM	A	Total local pitching moment coefficient including unsteady aerodynamics effects if any	-
DCM	B	Increment to local steady-state pitching moment coefficient from the BUNS unsteady aerodynamic option; included in the value of CM	-
HVDD	U	Second time derivative of the vibratory part of the local blade position ($\ddot{h}_v$); equivalent to the first time derivative of the vibratory part of the local heaving velocity	ft/sec^2
ALPHAD	B&U	Alpha dot, the first time derivative of ALPHA	deg/sec
THETAD	B&U	Theta dot, the first time derivative of THETA (the local blade pitch angle)	deg/sec
THETADD	B&U	Theta double dot, the second time derivative of THETA (derivative of THETAD)	deg/sec^2

* Printout code definition:

A = variable always included in printout

B = variable included in printout only when BUNS unsteady aerodynamics option is active

U = variable included in printout only when UNSAN unsteady aerodynamics option is active

B&U = variable included in the printout only when one of the unsteady aerodynamics options is active

PSI = 15. U-HUB = 168.31 V-HUB = 0.15 W-HUB = -12.67 GEO. PITCH = 14.81 BETA(HUB) = 2.21

STA	UT	UP	UR	MACH	ALPHA	CL	CD	CM
20	791.94	-45.67	-161.27	0.724	2.136	0.2614	0.01014	0.0
19	754.44	-44.71	-161.31	0.691	2.531	0.3046	0.01020	0.0
18	716.95	-43.75	-161.34	0.658	2.911	0.3449	0.01027	0.0
17	679.45	-42.77	-161.37	0.626	3.275	0.3823	0.01034	0.0
16	641.96	-41.76	-161.41	0.593	3.622	0.4171	0.01042	0.0
15	604.47	-40.72	-161.44	0.560	3.949	0.4493	0.01050	0.0
14	566.99	-39.63	-161.47	0.528	4.255	0.4789	0.01059	0.0
13	529.52	-38.47	-161.50	0.496	4.538	0.5061	0.01068	0.0
12	492.06	-37.26	-161.53	0.464	4.795	0.5310	0.01076	0.0
11	454.62	-35.97	-161.57	0.432	5.019	0.5532	0.01085	0.0
10	417.19	-34.63	-161.60	0.401	5.200	0.5723	0.01093	0.0
9	379.76	-33.23	-161.64	0.369	5.331	0.5880	0.01101	0.0
8	342.35	-31.78	-161.68	0.339	5.394	0.5992	0.01107	0.0
7	304.96	-30.27	-161.71	0.309	5.367	0.6047	0.01111	0.0
6	267.57	-28.70	-161.75	0.279	5.218	0.6018	0.01112	0.0
5	230.21	-27.06	-161.79	0.251	4.903	0.5872	0.01108	0.0
4	192.86	-25.37	-161.83	0.224	4.354	0.5536	0.01097	0.0
3	155.52	-23.64	-161.87	0.199	3.478	0.4864	0.01076	0.0
2	118.19	-21.91	-161.91	0.177	2.138	0.3499	0.01039	0.0
1	80.87	-20.69	-161.88	0.159	0.0	0.0	0.15000	0.0

PSI = 195. U-HUB = 168.31 V-HUB = 0.15 W-HUB = -12.67 GEO. PITCH = 12.69 BETA(HUB) = 2.93

STA	UT	UP	UR	MACH	ALPHA	CL	CD	CM
20	699.96	-2.82	162.95	0.643	3.250	0.3825	0.01033	0.0
19	662.87	-2.51	162.95	0.610	3.738	0.4338	0.01044	0.0
18	625.77	-2.22	162.95	0.578	4.217	0.4831	0.01057	0.0
17	588.68	-1.95	162.95	0.546	4.686	0.5307	0.01071	0.0
16	551.57	-1.71	162.95	0.514	5.140	0.5764	0.01086	0.0
15	514.46	-1.51	162.95	0.482	5.576	0.6202	0.01103	0.0
14	477.34	-1.36	162.95	0.451	5.989	0.6622	0.01120	0.0
13	440.22	-1.28	162.95	0.419	6.375	0.7025	0.01139	0.0
12	403.08	-1.25	162.95	0.388	6.727	0.7412	0.01158	0.0
11	365.93	-1.29	162.95	0.357	7.033	0.7780	0.01178	0.0
10	328.77	-1.38	162.95	0.327	7.278	0.8130	0.01198	0.0
9	291.59	-1.52	162.95	0.297	7.446	0.8462	0.01218	0.0
8	254.41	-1.69	162.95	0.269	7.505	0.8773	0.01238	0.0
7	217.21	-1.90	162.95	0.241	7.438	0.9053	0.01257	0.0
6	180.00	-2.13	162.95	0.215	7.091	0.9283	0.01274	0.0
5	142.77	-2.42	162.95	0.191	6.412	0.9413	0.01284	0.0
4	105.52	-2.77	162.96	0.170	5.256	0.9320	0.01281	0.0
3	68.27	-3.23	162.96	0.155	4.474	0.8602	0.01240	0.0
2	31.00	-3.72	162.96	0.145	2.634	0.5057	0.01083	0.0
1	-6.28	-3.77	162.97	0.143	0.0	0.0	0.15000	0.0

(a) Printout with unsteady aerodynamic options off.

Figure 4-30. Blade Element Aerodynamic Data.

PSI = 15. U-HUB = 168.31 V-HUB = 0.15 W-HUB = -12.67 COS. PITCH = 14.01 BETA(HUB) = 2.21

STA	UT	UP	UR	MACH	ALPHA	CL	DCL	CD	CM	DCM	ALPHAD	THETAD	THETADD
20	791.44	-45.64	-161.27	0.724	2.139	0.39759	0.13589	0.01014	-0.03705	-0.03705	283.03	710.69	92155.44
19	754.45	-44.68	-161.31	0.691	2.533	0.46314	0.15828	0.01020	-0.04269	-0.04269	335.89	775.36	100540.81
18	716.95	-43.71	-161.34	0.658	2.914	0.52810	0.18291	0.01027	-0.04872	-0.04872	387.26	839.69	108881.88
17	679.45	-42.74	-161.37	0.626	3.279	0.59275	0.21010	0.01034	-0.05542	-0.05542	436.82	903.56	117163.75
16	641.96	-41.73	-161.41	0.593	3.624	0.65775	0.24031	0.01042	-0.07136	-0.07136	484.60	966.85	125376.63
15	604.47	-40.69	-161.44	0.560	3.952	0.72371	0.27410	0.01050	-0.07789	-0.07789	530.39	1029.73	133525.25
14	566.99	-39.60	-161.47	0.528	4.258	0.79142	0.31221	0.01059	-0.08591	-0.08591	574.05	1092.07	141601.25
13	529.52	-38.44	-161.50	0.496	4.541	0.86209	0.35563	0.01068	-0.08924	-0.08924	615.61	1154.06	149646.75
12	492.07	-37.23	-161.53	0.464	4.798	0.93697	0.40563	0.01077	-0.08759	-0.08759	654.81	1215.87	157661.00
11	454.62	-35.95	-161.57	0.432	5.022	1.01741	0.46381	0.01085	-0.08603	-0.08603	691.11	1277.33	165630.50
10	417.19	-34.60	-161.60	0.401	5.203	1.10501	0.53236	0.01093	-0.08450	-0.08450	723.58	1338.44	173554.88
9	379.77	-33.21	-161.64	0.369	5.334	1.20293	0.61461	0.01101	-0.08300	-0.08300	751.73	1399.70	181498.19
8	342.36	-31.75	-161.68	0.339	5.397	1.31471	0.71512	0.01107	-0.08149	-0.08148	774.00	1461.15	189467.13
7	304.96	-30.25	-161.71	0.309	5.371	1.44566	0.84064	0.01111	-0.07986	-0.07986	788.26	1522.79	197459.50
6	267.58	-28.69	-161.75	0.279	5.221	1.60393	1.00174	0.01112	-0.07730	-0.07730	791.08	1584.52	205464.94
5	230.21	-27.05	-161.79	0.251	4.906	1.80371	1.21814	0.01108	-0.07410	-0.07410	777.48	1646.47	213497.44
4	192.86	-25.36	-161.83	0.224	4.357	2.06921	1.51528	0.01097	-0.07080	-0.07080	737.53	1708.80	221579.06
3	155.52	-23.63	-161.87	0.199	3.480	2.44757	1.96084	0.01076	-0.07041	-0.07041	651.40	1771.70	229732.25
2	118.19	-21.91	-161.91	0.177	2.140	3.03592	2.68571	0.01040	-0.07011	-0.07011	470.62	1832.19	237579.81
1	80.87	-20.69	-161.88	0.159	0.0	0.0	2.68571	0.15000	0.0	-0.07011	0.0	1832.19	237579.81

PSI = 195. U-HUB = 168.31 V-HUB = 0.15 W-HUB = -12.67 COS. PITCH = 12.69 BETA(HUB) = 2.43

STA	UT	UP	UR	MACH	ALPHA	CL	DCL	CD	CM	DCM	ALPHAD	THETAD	THETADD
20	699.96	-2.81	162.95	0.643	3.250	0.50623	0.12376	0.01033	-0.02864	-0.02864	432.70	462.53	59976.00
19	662.87	-2.50	162.95	0.610	3.737	0.58254	0.14981	0.01044	-0.03856	-0.03856	499.06	527.14	68353.81
18	625.77	-2.21	162.95	0.578	4.217	0.66203	0.17843	0.01057	-0.04966	-0.04966	565.00	591.29	76672.69
17	588.67	-1.96	162.95	0.546	4.685	0.74234	0.21169	0.01071	-0.05615	-0.05615	630.37	654.88	84917.44
16	551.57	-1.70	162.95	0.514	5.139	0.82508	0.24877	0.01086	-0.06360	-0.06360	694.85	717.80	93076.56
15	514.46	-1.51	162.95	0.482	5.575	0.91131	0.29117	0.01103	-0.06952	-0.06952	758.32	780.09	101153.88
14	477.34	-1.36	162.95	0.451	5.989	1.00230	0.34014	0.01120	-0.07866	-0.07866	820.54	841.72	109145.44
13	440.22	-1.28	162.95	0.419	6.374	1.09990	0.39747	0.01139	-0.08760	-0.08760	881.36	902.89	117077.19
12	403.08	-1.25	162.95	0.388	6.726	1.20682	0.46568	0.01158	-0.08598	-0.08598	940.79	963.82	124978.38
11	365.93	-1.29	162.95	0.357	7.032	1.32603	0.54809	0.01178	-0.08459	-0.08459	998.12	1024.31	132822.06
10	328.77	-1.38	162.95	0.327	7.277	1.46264	0.64980	0.01198	-0.08341	-0.08341	1053.16	1084.33	140604.13
9	291.59	-1.52	162.95	0.297	7.445	1.62506	0.77902	0.01218	-0.08241	-0.08241	1105.87	1144.51	148408.44
8	254.41	-1.69	162.95	0.269	7.504	1.82585	0.94870	0.01238	-0.08157	-0.08157	1155.55	1204.94	156244.31
7	217.21	-1.90	162.95	0.241	7.407	2.08644	1.18121	0.01257	-0.08090	-0.08090	1200.71	1265.60	164110.25
6	179.99	-2.13	162.95	0.215	7.080	2.44694	1.51874	0.01274	-0.08043	-0.08043	1238.33	1326.39	171993.19
5	142.77	-2.42	162.95	0.191	6.412	2.99307	2.05188	0.01284	-0.08002	-0.08002	1261.63	1387.46	179912.06
4	105.52	-2.77	162.96	0.170	5.255	3.94636	3.01451	0.01280	-0.07983	-0.07983	1253.72	1449.04	187896.75
3	68.27	-3.23	162.96	0.155	4.473	6.09792	5.23785	0.01240	-0.08097	-0.08097	1160.06	1511.35	195980.88
2	31.00	-3.72	162.96	0.145	2.633	15.33380	14.82825	0.01083	-0.06974	-0.06974	682.84	1570.62	203661.25
1	-6.28	-3.77	162.97	0.143	0.0	0.0	14.82825	0.15000	0.0	-0.06974	0.0	1570.62	203661.25

(b) Printout for BUNS unsteady aerodynamics option active.

Figure 4-30. Continued.

PSI = 15. U-HUB = 168.31 V-HUB = 15 W-HUB = -12.68 GEO. PITCH = 14.81 BETA(HUB) = 2.20

STA	UT	UP	UR	MACH	ALPHA	CL	DCL	CD	CM	DCM	ALPHAD	THETAD	THETADD
20	791.94	-45.76	-161.27	0.725	2.195	0.20892	0.07024	0.01014	-0.02705	-0.02705	284.68	713.54	92524.63
19	754.45	-44.79	-161.31	0.692	2.604	0.24114	0.12724	0.01020	-0.03111	-0.03111	337.61	778.20	100909.00
18	716.95	-43.81	-161.34	0.659	3.000	0.27436	0.19646	0.01027	-0.03552	-0.03552	389.04	842.50	109247.13
17	679.45	-42.83	-161.38	0.626	3.383	0.30874	0.27766	0.01034	-0.04033	-0.04033	438.65	906.33	117524.19
16	641.96	-41.81	-161.41	0.594	3.752	0.34255	0.36882	0.01038	-0.04564	-0.04564	486.47	969.62	125730.50
15	604.47	-40.75	-161.44	0.561	4.105	0.37605	0.47030	0.01031	-0.05154	-0.05154	532.29	1032.40	133870.69
14	566.99	-39.65	-161.47	0.529	4.442	0.40961	0.58273	0.01024	-0.05820	-0.05820	575.96	1094.65	141943.31
13	529.53	-38.49	-161.51	0.497	4.762	0.44376	0.70717	0.01016	-0.06579	-0.06579	617.52	1156.55	149969.63
12	492.07	-37.26	-161.54	0.465	5.064	0.47899	0.84498	0.01008	-0.07457	-0.07457	656.70	1218.24	157969.38
11	454.62	-35.97	-161.57	0.433	5.344	0.51572	0.99782	0.01002	-0.08488	-0.08488	692.98	1279.58	165922.44
10	417.19	-34.62	-161.61	0.402	5.594	0.55444	1.16775	0.01000	-0.09717	-0.09717	725.40	1340.55	173828.56
9	379.77	-33.22	-161.64	0.371	5.811	0.59622	1.35781	0.01005	-0.11218	-0.11218	753.51	1401.67	181754.50
8	342.36	-31.76	-161.68	0.340	5.983	0.63979	1.56920	0.01019	-0.13091	-0.13091	775.75	1463.00	189706.88
7	304.96	-30.25	-161.72	0.310	6.092	0.69569	1.80055	0.01049	-0.15496	-0.15496	789.99	1524.52	197683.81
6	267.58	-28.68	-161.76	0.281	6.114	0.77300	1.86666	0.01101	-0.18687	-0.18687	792.80	1586.14	205674.06
5	230.21	-27.04	-161.80	0.253	6.009	0.88513	1.98120	0.01184	-0.23117	-0.23117	779.19	1647.97	213692.44
4	192.86	-25.35	-161.84	0.226	5.701	1.05728	2.17661	0.01308	-0.29643	-0.29643	739.24	1710.20	221761.81
3	155.52	-23.62	-161.87	0.202	5.037	1.34221	2.52019	0.01443	-0.40092	-0.40092	653.14	1773.04	229909.63
2	118.19	-21.90	-161.91	0.181	3.643	1.86554	3.17338	0.01550	-0.58954	-0.58954	472.35	1833.36	237731.56
1	80.86	-20.68	-161.89	0.163	0.0	0.0	3.17338	0.15000	0.0	-0.58954	0.0	1833.36	237731.56

PSI = 195. U-HUB = 168.31 V-HUB = 0.15 W-HUB = -12.68 GEO. PITCH = 12.69 BETA(HUB) = 2.93

STA	UT	UP	UR	MACH	ALPHA	CL	DCL	CD	CM	DCM	ALPHAD	THETAD	THETADD
20	699.96	-3.18	162.95	0.643	3.321	0.24301	0.17730	0.01033	-0.02688	-0.02688	430.63	464.34	60210.98
19	662.87	-2.87	162.95	0.611	3.831	0.28556	0.26437	0.01044	-0.03148	-0.03148	496.83	528.95	68588.19
18	625.77	-2.57	162.95	0.579	4.338	0.32768	0.36309	0.01044	-0.03656	-0.03656	562.57	593.09	76905.38
17	588.67	-2.29	162.95	0.547	4.841	0.36950	0.47395	0.01038	-0.04223	-0.04223	627.73	656.65	85147.25
16	551.57	-2.05	162.95	0.515	5.337	0.41109	0.59777	0.01030	-0.04863	-0.04863	691.99	719.54	93302.38
15	514.46	-1.84	162.95	0.483	5.824	0.45266	0.73579	0.01021	-0.05594	-0.05594	755.22	781.79	101374.63
14	477.34	-1.68	162.95	0.451	6.302	0.49442	0.88966	0.01012	-0.06443	-0.06443	817.21	843.38	109360.25
13	440.21	-1.58	162.95	0.420	6.769	0.53676	1.06169	0.01004	-0.07446	-0.07446	877.79	904.49	117284.81
12	403.07	-1.54	162.95	0.389	7.226	0.58022	1.25507	0.01000	-0.08656	-0.08656	936.99	965.35	125177.25
11	365.92	-1.56	162.95	0.359	7.666	0.62447	1.47307	0.01003	-0.10142	-0.10142	994.09	1025.76	133010.56
10	328.76	-1.63	162.95	0.328	8.089	0.67040	1.58150	0.01019	-0.12020	-0.12020	1048.90	1085.70	140781.81
9	291.58	-1.74	162.95	0.299	8.494	0.73108	1.59401	0.01055	-0.14473	-0.14473	1101.40	1145.80	148575.81
8	254.40	-1.89	162.95	0.270	8.875	0.81564	1.63429	0.01123	-0.17809	-0.17809	1150.86	1206.16	156402.06
7	217.20	-2.07	162.95	0.243	9.222	0.94146	1.72066	0.01190	-0.22584	-0.22584	1195.81	1266.75	164259.13
6	179.99	-2.28	162.95	0.217	9.510	1.14428	1.89096	0.01177	-0.29911	-0.29911	1233.20	1327.48	172133.38
5	142.76	-2.54	162.96	0.194	9.688	1.50794	2.23390	0.01169	-0.42356	-0.42356	1256.25	1388.48	180044.38
4	105.52	-2.87	162.96	0.174	9.624	2.27308	3.00254	0.01172	-0.67172	-0.67172	1248.00	1450.01	188022.06
3	68.26	-3.30	162.96	0.158	8.897	4.42037	5.21790	0.01206	-1.33624	-1.33624	1153.71	1512.31	196100.81
2	31.00	-3.76	162.96	0.149	5.202	16.83922	17.99048	0.01431	-5.04927	-5.04927	674.57	1571.45	203769.44
1	-6.28	-3.78	162.97	0.146	0.0	0.0	17.99048	0.15000	0.0	-5.04927	0.0	1571.45	203769.44

(c) Printout for UNSAN unsteady aerodynamic option active.

Figure 4-30. Concluded.

MAIN ROTOR

BEAM BENDING MOMENT

STATION	BLADE 1	BLADE 2	BLADE 3	BLADE 4	BLADE 5	BLADE 6	BLADE 7
1	-272.222	246.823	0.0	0.0	0.0	0.0	0.0
2	-745.554	667.944	0.0	0.0	0.0	0.0	0.0
3	-1171.240	1077.034	0.0	0.0	0.0	0.0	0.0
4	-1668.707	1547.599	0.0	0.0	0.0	0.0	0.0
5	-2254.461	2126.369	0.0	0.0	0.0	0.0	0.0
6	-2469.777	2729.102	0.0	0.0	0.0	0.0	0.0
7	-3116.729	3025.679	0.0	0.0	0.0	0.0	0.0
8	-2449.287	2846.581	0.0	0.0	0.0	0.0	0.0
9	-2452.770	2504.107	0.0	0.0	0.0	0.0	0.0
10	-2323.599	2413.404	0.0	0.0	0.0	0.0	0.0
11	-2503.817	2552.709	0.0	0.0	0.0	0.0	0.0
12	-2922.505	2855.101	0.0	0.0	0.0	0.0	0.0
13	-3624.866	3331.417	0.0	0.0	0.0	0.0	0.0
14	-4741.897	4357.173	0.0	0.0	0.0	0.0	0.0
15	-6595.922	5093.066	0.0	0.0	0.0	0.0	0.0
16	-9057.469	6375.586	0.0	0.0	0.0	0.0	0.0
17	-11516.343	7316.797	0.0	0.0	0.0	0.0	0.0
18	-11972.414	6338.367	0.0	0.0	0.0	0.0	0.0
19	-9506.004	939.214	0.0	0.0	0.0	0.0	0.0
20	-11781.613	-7004.449	0.0	0.0	0.0	0.0	0.0

CHORD BENDING MOMENT

STATION	BLADE 1	BLADE 2	BLADE 3	BLADE 4	BLADE 5	BLADE 6	BLADE 7
1	18.273	38.147	0.0	0.0	0.0	0.0	0.0
2	99.574	124.830	0.0	0.0	0.0	0.0	0.0
3	228.422	227.768	0.0	0.0	0.0	0.0	0.0
4	382.821	326.717	0.0	0.0	0.0	0.0	0.0
5	551.005	426.823	0.0	0.0	0.0	0.0	0.0
6	753.372	553.671	0.0	0.0	0.0	0.0	0.0
7	970.184	695.663	0.0	0.0	0.0	0.0	0.0
8	1211.911	879.653	0.0	0.0	0.0	0.0	0.0
9	1421.337	1132.999	0.0	0.0	0.0	0.0	0.0
10	1573.887	1446.710	0.0	0.0	0.0	0.0	0.0
11	1734.328	1852.743	0.0	0.0	0.0	0.0	0.0
12	1761.625	2329.512	0.0	0.0	0.0	0.0	0.0
13	1770.799	2892.466	0.0	0.0	0.0	0.0	0.0
14	1732.297	3560.544	0.0	0.0	0.0	0.0	0.0
15	1541.675	4338.898	0.0	0.0	0.0	0.0	0.0
16	1287.564	5244.387	0.0	0.0	0.0	0.0	0.0
17	959.723	6329.461	0.0	0.0	0.0	0.0	0.0
18	-12.503	7953.121	0.0	0.0	0.0	0.0	0.0
19	-3634.516	10732.746	0.0	0.0	0.0	0.0	0.0
20	-4956.859	12612.898	0.0	0.0	0.0	0.0	0.0

TORSION MOMENT

STATION	BLADE 1	BLADE 2	BLADE 3	BLADE 4	BLADE 5	BLADE 6	BLADE 7
1	-160.929	626.555	0.0	0.0	0.0	0.0	0.0
2	-321.274	1253.764	0.0	0.0	0.0	0.0	0.0
3	-483.327	1869.311	0.0	0.0	0.0	0.0	0.0
4	-637.330	2478.189	0.0	0.0	0.0	0.0	0.0
5	-774.096	3022.107	0.0	0.0	0.0	0.0	0.0
6	-870.001	3377.049	0.0	0.0	0.0	0.0	0.0
7	-949.929	3681.261	0.0	0.0	0.0	0.0	0.0
8	-1018.715	3948.759	0.0	0.0	0.0	0.0	0.0
9	-1083.524	4183.730	0.0	0.0	0.0	0.0	0.0
10	-1143.046	4437.734	0.0	0.0	0.0	0.0	0.0
11	-1236.503	4654.246	0.0	0.0	0.0	0.0	0.0
12	-1262.917	4862.148	0.0	0.0	0.0	0.0	0.0
13	-1312.677	5044.859	0.0	0.0	0.0	0.0	0.0
14	-1359.055	5214.711	0.0	0.0	0.0	0.0	0.0
15	-1397.617	5356.237	0.0	0.0	0.0	0.0	0.0
16	-1426.789	5465.641	0.0	0.0	0.0	0.0	0.0
17	-1453.822	5567.500	0.0	0.0	0.0	0.0	0.0
18	-1479.180	5663.020	0.0	0.0	0.0	0.0	0.0
19	-1501.344	5746.746	0.0	0.0	0.0	0.0	0.0
20	-1520.937	5820.938	0.0	0.0	0.0	0.0	0.0

Figure 4-31. Blade Element Bending Moment Data.

5. DIAGNOSTIC AND ERROR MESSAGES

5.1 GENERAL

All of the messages generated by the computer program itself rather than the computer operating system and which are considered to be error messages are listed below. The messages are in alphabetical order with the following words ignored: M.R., T.R., COLLECTIVE STICK, F/A CYCLIC STICK, LAT CYCLIC STICK, PEDAL, MAIN, TAIL, WING, STB1, STB2, STB3, STB4, THE.

Two or more words or phrases enclosed in brackets, one above the other, indicates that it is possible to have either word or phrase, but only one, in the message when it is printed out. An underline in the message indicates a place for numerical value in the message.

After each message is the name of the subroutine which printed it out. The next statement is about the condition which caused the message to be printed. Next is an indication of the consequences of the condition followed by instructions to the user.

5.2 MESSAGES

5.2.1 Bypass of Wagner Function

ALLEVIATION DEVICE FOR WINGS BYPASSED BECAUSE WING CHORD IS TOO SMALL FOR THIS TIME INCREMENT AND VELOCITY

From WAG

The analysis contained in WAG assumes a minimum number of data points will be sampled in a distance traveled which is calculated from the wing chord. This message indicates that the ratio, $V(\Delta t)/(\text{wing chord})$, is too large.

WAG is bypassed for wing. Execution continues.

To eliminate the message make Δt, ZDELT1 or ZDELT2, on data card 301, smaller.

5.2.2 Error in Vector Analysis

AN ATTEMPT WAS MADE TO MANIPULATE A VARIABLE WHICH HAD NOT BEEN INCLUDED IN THE GROUP TO BE FITTED. PROCESSING TERMINATED.

From CURVET

During the amplitude and phase angle comparison of the linearization portion of the curve-fit section of the program, a request was made to use a variable for which no prior request to fit that variable had been made. Thus, the information necessary had not been computed and so the comparison or linearization could not be made.

Comparison and Linearization terminates.

Check input data to curve-fit routine for error indicated.

5.2.3 Apparent Discontinuity During Maneuver

APPARENT DISCONTINUITY ENCOUNTERED AT TIME = ____ WITH A TIME STEP OF ____

From HAMM

In the course of computing a maneuver using Hamming's method of numerical integration, an apparent discontinuity was encountered in one of the variables being integrated. The program switches to using Runge-Kutta techniques used to start Hamming's method until the discontinuity is passed.

This is a warning message only. Execution continues.

5.2.4 Error in Jet Control Linkages

CHANGE IN JET THRUST WITH { COLLECTIVE / F/A CYCLIC / LAT CYCLIC / PEDAL } STICK POSITION INPUT IS IN

ERROR

From JFBGIN

The number of controlled jets, XJET(1), was input as zero, but the change in jet thrust with the specified control was not zero.

Problem step terminates.

Check the values of XJET(1), XCON(1), XCON(6), XCON(13), XCON(20), and XCON(27) for errors.

5.2.5 Error in Fuselage Inertias

CHECK INPUT FUSELAGE INERTIAS. THE NUMBERS INPUT ARE PHYSICALLY IMPOSSIBLE AND CANNOT BE HANDLED BY THIS PROGRAM.

From MNEM or EXTORS

This message indicates that $I_X I_Z - I_{XZ}^2 = 0$, which is physically impossible.

Problem step terminates.

Change the input data for I_X, I_Z, or I_{XZ} for fuselage and stores.

5.2.6 Error in J-Card

CHECK PART 2 DATA CARD _____ J CODE IS _____

From SIVAR or TIVAR

A value for J on 311-type card has been input for which an operation is not defined.

Problem step terminates.

Change the card indicated by the message.

5.2.7 Error in NPART

DATA ERROR . . NPART = _____

From MAIN

The control program, MAIN, read an illegal value of NPART on CARD 01, 401, 601, or 701. This error most commonly occurs after another error has interrupted the normal sequence of events by terminating the problem step.

Problem step terminates.

5.2.8 Problem in Numerical Integration

DIFFERENTIAL EQUATION SOLUTION FAILS TO MEET ACCURACY SPECIFIED

_____

From HPCG

In the course of computing a maneuver using Hamming's method of numerical integration, the solution of the differential equations was not within the prescribed tolerance. The tolerance is doubled, the time step is halved, and the solution is attempted again.

If the equations still fail to meet the prescribed accuracy after six such attempts, the problem step is terminated.

If problem step terminates, reduce the initial maneuver time increment. Otherwise no action is required.

5.2.9 Error in Drag Divergence Mach Number

DRAG DIVERGENCE MACH NUMBER INPUT FOR xxxx IS IN ERROR

IT HAS BEEN RESET TO _____.

Where xxxx is SUBGROUP 1, SUBGROUP 2, SUBGROUP 3, SUBGROUP 4, SUBGROUP 5, WING, STB1, STB2, STB3, or STB4

From YSINIT or YRINIT

Y(1) for rotor or surface aerodynamic data was input greater than or equal to 1. This is a warning message.

5.2.10 Excessive Rotor Blade Angle of Attack

$$\text{EXCESSIVE ANGLE OF ATTACK FOR N} = \left\{ \begin{matrix} 1 \\ 2 \end{matrix} \right\}$$

From CDCL

The angle of attack of a blade segment on the $\left\{ \begin{matrix} \text{main} \\ \text{tail} \end{matrix} \right\}$ rotor exceeded 20 radians.

Problem step terminates.

5.2.11 Excessive Angle of Attack on Aerodynamic Surface

$$\text{EXCESSIVE ANGLE OF ATTACK ON} = \left(\begin{matrix} \text{STB1} \\ \text{STB2} \\ \text{STB3} \\ \text{STB4} \\ \text{RWG} \\ \text{LWG} \end{matrix} \right)$$

From CLCD

Subrouting CLCD was entered with the angle of attack of the

$$\left\{ \begin{matrix} \text{Stabilizer No. 1} \\ \text{Stabilizer No. 2} \\ \text{Stabilizer No. 3} \\ \text{Stabilizer No. 4} \\ \text{Right Wind Panel} \\ \text{Left Wing Panel} \end{matrix} \right\} \text{ greater than 20 radians.}$$

Problem step terminates.

5.2.12 Induced Velocity Nonconvergent

INDUCED VELOCITY SET TO 0.__ CALCULATIONS NONCONVERGENT.

From VIND

The iterative loop which calculates induced velocity for a constant velocity and rotor thrust has not converged in 100 iterations.

Warning message only. Execution continues.

5.2.13 Error in IPSN

IPSN INDICATED NOT ON LIBRARY

From C81L

In an operation with NPART = 8, NVARA ≠ 0 on Card 01, the IPSN input on card 02 does not match any IPSN on the file tape.

Problem step terminates.

Check input IPSN and list of IPSN's on the file tape.

5.2.14 Error in Number of Advance Ratios

INPUT FOR NO. OF ADVANCE RATIOS, _____, IS IN ERROR.

From REDRWK

The input for the number of advance ratio entries in the rotor-induced velocity distribution table is greater than 10, the maximum allowable.

Problem step terminates.

Check for mispunched input or reduce the input to 10 or less.

5.2.15 Error in Number of Inflow Ratios

INPUT FOR NO. OF INFLOW RATIOS, ____, IS IN ERROR.

From REDRWR

The input for the number of inflow ratio entries in the rotor-induced velocity distribution table is greater than 5, the maximum allowable.

Problem step terminates.

Check for mispunched input or reduce the input to 5 or less.

5.2.16 Error in Number of Radial Station

INPUT FOR NO. OF RADIAL STATIONS IS IN ERROR. IT SHOULD BE 4, 5, 10, or 20

From REDRWK

The input for the number of radial station entries in the rotor induced velocity distribution table is not equal to one of the values specified.

Problem step terminates.

Check for mispunched input or change the input to one of the prescribed values.

5.2.17 Error in Number of Harmonics

INPUT FOR THE HIGHEST HARMONICS IS IN ERROR.

From REDRWK

The input for the number of the highest harmonic in the rotor-induced velocity distribution table is greater than 16.

Problem step terminates.

Check for mispunched input or reduce the input to 16 or less.

5.2.18 Error in Program Logic Input

INPUT TO IPL(_____) IS IN ERROR

From ERRCHK

IPL input indicated has an illegal value. Problem step terminates.

Check for mispunched input or refer to Section 3 to find the reason the input interpreted as an error.

5.2.19 Error in Reading Controls Group

INPUT TO SWITCH FOR READING ROTOR CONTROL INPUTS IS IN ERROR

From XCONIN

The value of IPL(13) indicates that the rotor supplementary controls group is not to be read. However, other data indicates that the configuration being simulated is not a single-main-rotor helicopter. These situations are not compatible.

Problem step terminates.

Add the specified controls subgroup, using blank cards if the inputs are not to be used.

5.2.20 Error in Store Drop

INPUT TO WEIGHT OR TIME TO DROP EXTERNAL STORE NO. ____ IS IN ERROR

From SIVAR

The time to drop the referenced store on a 311-type card is less than zero or the weight input, XSTi(1), for the referenced store (i) is less than or equal to zero. The weight input of a store/brake group must be greater than zero for a store which is to be dropped.

Problem step terminates.

Check inputs for time to drop store (J = 35) and weight of store to be dropped for input errors.

5.2.21 Error When Reading From Library

MEMBER _____ NOT IN C81LIB

From REDID

An attempt was made to read a data group from the data library, and the group was not on the library. Problem step terminates.

Check data for a misspelled group name; or if the member printed in the message appears to be data, check for extra or missing data cards.

5.2.22 Error in Partial Derivative Matrix

THE PARTIAL DERIVATIVE MATRIX IS SINGULAR. THIS IS PROBABLY CAUSED BY ONE OF THE CONTROLS BEING UNCONNECTED.

From ITRIM

During the TRIM procedure, a singular partial derivative matrix occurred. The usual cause is an error in the input data for one of the controls. Previous matrices, if any, should be examined for a near-zero row or column to help locate the cause.

Problem step terminates.

5.2.23 Error in Fuselage Inputs

PEAK FORCE/MOMENT OR ITS CORRESPONDING ANGLE INPUT FOR FUSELAGE

{LIFT, PITCH, SIDE FRC, ROLL, YAW} EQUATION IS IN ERROR.

IT HAS BEEN RESET TO 0.

From FUSINT

According to the inputs to the fuselage High Angle Equations, a nonzero peak force or moment occurs at a zero aerodynamic angle or a zero peak force or moment occurs at a nonzero aerodynamic angle. The peak force or moment and the angle have been reset to zero. Based on the equation indicated, check the following fuselage inputs:

LIFT:	XFS(17) and XFS(18)
PITCH:	XFS(45) and XFS(46)
SIDE FORCE:	XFS(58) and XFS(59)
ROLL:	XFS(72) and XFS(73)
YAW:	XFS(86) and XFS(87)

Warning message only. Execution continues.

5.2.24 Error in Vector Analysis

THE PHASE ANGLE DIFFERENCE BETWEEN _____ AND _____ IS A MULTIPLE OF 180 DEGREES. THEREFORE, NO VARIABLE CAN BE EXPRESSED AS A LINEAR FUNCTION OF THEM.

From CURVET

The vector analysis section of the program where the coefficients in the expression A = KB * B + KC * C + D are derived has failed because of the linear dependency of B and C.

Program goes to next set of variables.

5.2.25 Excessive Power

POWER REQD. FOR TRIM COND. EXCEEDS POWER AVAILABLE

From WRTMNV

The power required to maintain constant rpm at the trim condition is greater than 0.9 times the maximum engine power available, XFC(24).

Problem step terminates.

Check for rotor stall, practicality of flight conditions, or increase engine power.

5.2.26 Error in Flapping Moment Computations

{MAIN / TAIL} ROTOR FLAPPING MOMENT IS NOT IN BALANCE AFTER

_____ ITERATIONS.

From ITROT

The iteration loop in the rotor analysis which balances the rotor flapping moments was activated but could not balance the rotor in the number of iterations allowed.

Problem step terminates.

Check configuration, flight regime, and spatial orientation for compatibility.

5.2.27 Error in Flapping Angles Computation

{MAIN / TAIL} ROTOR FLAPPING CORRECTION IS INFINITE.

From ITROT

The iteration loop in the rotor analysis which balances the rotor flapping moments was activated and could not compute a correction to the flapping angles.

Problem step terminates.

Check configuration, flight regime, and spatial orientation for compatibility.

5.2.28 Ground Contact

SHIP CONTACTS GROUND

From VIND

Altitude has become negative.

Problem step terminates.

Find out why ship lost altitude and correct.

5.2.29 Aerodynamic Surface Stall

$$\left\{\begin{matrix}\text{STB1}\\ \text{STB2}\\ \text{STB3}\\ \text{STB4}\\ \text{RWG}\\ \text{LWG}\end{matrix}\right\} \quad \left\{\begin{matrix}\text{ENTERING}\\ \text{LEAVING}\end{matrix}\right\} \quad \text{STALL}$$

From CLCD

The angle of attack of one of the fixed aerodynamic surfaces has just crossed the stall point in the direction indicated.

Warning message only. Execution continues.

5.2.30 Error in Supersonic Mach Number

SUPERSONIC MACH NUMBER FOR xxxx IS IN ERROR. IT HAS BEEN RESET TO _____.

Where xxxx is SUBGROUP 1, SUBGROUP 2, SUBGROUP 3, SUBGROUP 4, SUBGROUP 5, WING, STB1, STB2, STB3, or STB4.

From YRINIT or YSINIT.

Y(2) was input less than or equal to 1.

This is a warning message. Execution continues.

5.2.31 Illegal Use of Time-Variant Rotor Analysis

TIME VARIANT ROTORS CANNOT BE USED IN A STABILITY ANALYSIS

From INSTAB

An attempt was made to enter the stability analysis routines with a time-variant rotor(s). The stability analysis is predicated upon using the quasi-static rotor analysis.

Program execution is terminated.

Either use the quasi-static rotor analysis, or eliminate the request for a stability analysis.

5.2.32 Error in Partial Derivative Computations

WARNING, THE PARTIAL DERIVATIVE MATRIX MAY BE IN ERROR.

From ITROT

In the rotor analysis, the iteration loop which balances the rotor flapping moments and the thrust-induced velocity iteration loop are both activated. While each is able to converge separately, they have not been able to converge together.

Warning message only. Execution continues.

Exercise care in use of the partial derivative matrix immediately following this message.

5.2.33 Deactivation of Wagner Function

WAGNER FUNCTION IS TEMPORARILY TURNED OFF

From LIZE

The Wagner function for the time of lift buildup on the wing is turned off since the function is not compatible with Hamming's method of numerical integration. Hence, it is turned off when using Hamming's method.

Warning message only. Execution continues.

5.2.34 Error in Pitching Moment Inputs

$$\begin{Bmatrix} Y(22) \\ Y(23) \\ Y(24) \end{Bmatrix} \text{ FOR xxxx HAS BEEN RESET TO } \begin{Bmatrix} -1. \\ 0. \\ 0. \end{Bmatrix}$$

Where xxxx is SUBGROUP 1, SUBGROUP 2, SUBGROUP 3, SUBGROUP 4, SUBGROUP 5, WING, STB1, STB2, STB3, or STB4.

From YRINIT or YSINIT

The data input for the pitching moment coefficient was inconsistent and the adjustment indicated was made to make the data consistent.

Warning message only. Execution continues.

6. VARIABLES SAVED DURING MANEUVERS

During the computation of the time history of a maneuver, over 1300 variables are saved at each time point. At the end of the maneuver, the program can perform one or more of the following operations on these data:

(1) Plotting (see Section 3.22)

(2) Harmonic Analysis (see Section 3.23)

(3) Vector Analysis (see Section 3.24)

As noted in the referenced sections, code numbers are used to identify the variable(s) to be plotted or analyzed. The code number for each variable saved is given in Table 6-1.

In the table, the first 521 code numbers are defined by the title which is printed as part of the program output. These titles include a description of the variable and its units. The remaining code numbers (522 through 1351) are defined by a single equation and an example of the associated title.

The variables saved can be grouped into the six general classifications given below:

Range of Code Numbers	Source or Type of Data
1 - 132	Force and moment summary
133 - 341	Maneuver time point page
342 - 446	Elastic response of Rotor 1
447 - 521	Elastic response of Rotor 2
522 - 971	Blade element moment data for Rotor 1
972 -1391	Blade element moment data for Rotor 2

Note that in the description of the code numbers for the first two groups, there are a few entries labeled "NOT USED." These code numbers are reserved for future additions to the list of variables saved and do not contain any meaningful data.

TABLE 6-1. CODE NUMBERS FOR VARIABLES SAVED		
Group	**Number**	**Description**
FORCE AND MOMENT SUMMARY	1	TOTAL X-FORCE ON C.G., LB
	2	X-FORCE FROM RIGHT WING, LB
	3	X-FORCE FROM LEFT WING, LB
	4	NOT USED
	5	NOT USED
	6	X-FORCE FROM FUSELAGE, LB
	7	X-FORCE FROM JETS/GUN FIRE,LB
	8	X-FORCE FROM ROTOR1, LB
	9	X-FORCE FROM ROTOR2, LB
	10	X-FORCE FROM WEIGHT, LB
	11	TOTAL Y-FORCE ON C.G., LB
	12	NOT USED
	13	Y-FORCE FROM FUSELAGE, LB
	14	Y-FORCE FROM JETS/GUN FIRE,LB
	15	Y-FORCE FROM ROTOR1, LB
	16	Y-FORCE FROM ROTOR2, LB
	17	Y-FORCE FROM WEIGHT, LB
	18	TOTAL Z-FORCE ON C.G., LB
	19	Z-FORCE FROM RIGHT WING, LB
	20	Z-FORCE FROM LEFT WING, LB
	21	NOT USED
	22	Z-FORCE FROM FUSELAGE, LB
	23	Z-FORCE FROM JETS/GUN FIRE,LB

TABLE 6-1. Continued

Group	Number	Description
FORCE AND MOMENT SUMMARY (Continued)	24	Z-FORCE FROM ROTOR1, LB
	25	Z-FORCE FROM ROTOR2, LB
	26	Z-FORCE FROM WEIGHT, LB
	27	TOTAL ROLL MOM ON C.G., FT-LB
	28	ROLL MOM FROM RIGHT WING, LB
	29	ROLL MOM FROM LEFT WING, FT-LB
	30	NOT USED
	31	NOT USED
	32	ROLL MOM FROM FUSELAGE, FT-LB
	33	ROLL MOM FROM JETS/GUN FIRE,FT-LB
	34	ROLL MOM FROM ROTOR1 FORCES, FT-LB
	35	ROLL MOM FROM ROTOR2 FORCES, FT-LB
	36	ROLL MOM FROM ROTOR1 TORQUE, FT-LB
	37	ROLL MOM FROM ROTOR2 TORQUE, FT-LB
	38	TOTAL PITCH MOM ON C.G., FT-LB
	39	PITCH MOM FROM RIGHT WING, FT-LB
	40	PITCH MOM FROM LEFT WING, FT-LB
	41	NOT USED
	42	NOT USED
	43	PITCH MOM FROM FUSELAGE, FT-LB
	44	PITCH MOM FROM JETS/GUN FIRE,FT-LB
	45	PITCH MOM FROM ROTOR1 FORCES, FT-LB
	46	PITCH MOM FROM ROTOR2 FORCES, FT-LB

TABLE 6-1. Continued

Group	Number	Description
FORCE AND MOMENT SUMMARY (Continued)	47	PITCH MOM FROM ROTOR1 TORQUE, FT-LB
	48	PITCH MOM FROM ROTOR2 TORQUE, FT-LB
	49	TOTAL YAW MOM ON C.G., FT-LB
	50	YAW MOM FROM RIGHT WING, FT-LB
	51	YAW MOM FROM LEFT WING, FT-LB
	52	NOT USED
	53	NOT USED
	54	YAW MOM FROM FUSELAGE, FT-LB
	55	YAW MOM FROM JETS/GUN FIRE, FT-LB
	56	YAW MOM FROM ROTOR1 FORCES, FT-LB
	57	YAW MOM FROM ROTOR2 FORCES, FT-LB
	58	YAW MOM FROM ROTOR1 TORQUE, FT-LB
	59	YAW MOM FROM ROTOR2 TORQUE, FT-LB
	60	X-FORCE FROM STABILIZER 1, LB
	61	X-FORCE FROM STABILIZER 2, LB
	62	X-FORCE FROM STABILIZER 3, LB
	63	X-FORCE FROM STABILIZER 4, LB
	64	Y-FORCE FROM STABILIZER 1, LB
	65	Y-FORCE FROM STABILIZER 2, LB
	66	Y-FORCE FROM STABILIZER 3, LB
	67	Y-FORCE FROM STABILIZER 4, LB
	68	Z-FORCE FROM STABILIZER 1, LB
	69	Z-FORCE FROM STABILIZER 2, LB

TABLE 6-1. Continued

Group	Number	Description
FORCE AND MOMENT SUMMARY (Continued)	70	Z-FORCE FROM STABILIZER 3, LB
	71	Z-FORCE FROM STABILIZER 4, LB
	72	NOT USED
	73	NOT USED
	74	NOT USED
	75	ROLL MOM FROM STAB NO. 1, FT-LB
	76	ROLL MOM FROM STAB NO. 2, FT-LB
	77	ROLL MOM FROM STAB NO. 3, FT-LB
	78	ROLL MOM FROM STAB NO. 4, FT-LB
	79	PITCH MOM FROM STAB NO. 1, FT-LB
	80	PITCH MOM FROM STAB NO. 2, FT-LB
	81	PITCH MOM FROM STAB NO. 3, FT-LB
	82	PITCH MOM FROM STAB NO. 4, FT-LB
	83	YAW MOM FROM STAB NO. 1, FT-LB
	84	YAW MOM FROM STAB NO. 2, FT-LB
	85	YAW MOM FROM STAB NO. 3, FT-LB
	86	YAW MOM FROM STAB NO. 4, FT-LB
	87	NOT USED
	88	NOT USED
	89	NOT USED
	90	Y-FORCE FROM RIGHT WING, LB
	91	Y-FORCE FROM LEFT WING, LB
	92	NOT USED

TABLE 6-1. Continued

Group	Number	Description
FORCE AND MOMENT SUMMARY (Continued)	93	NOT USED
	94	NOT USED
	95	NOT USED
	96	NOT USED
	97	NOT USED
	98	NOT USED
	99	NOT USED
	100	NOT USED
	101	NOT USED
	102	NOT USED
	103	NOT USED
	104	X-FORCE FROM STORE NO. 1, LB
	105	X-FORCE FROM STORE NO. 2, LB
	106	X-FORCE FROM STORE NO. 3, LB
	107	X-FORCE FROM STORE NO. 4, LB
	108	Y-FORCE FROM STORE NO. 1, LB
	109	Y-FORCE FROM STORE NO. 2, LB
	110	Y-FORCE FROM STORE NO. 3, LB
	111	Y-FORCE FROM STORE NO. 4, LB
	112	Z-FORCE FROM STORE NO. 1, LB
	113	Z-FORCE FROM STORE NO. 2, LB
	114	Z-FORCE FROM STORE NO. 3, LB
	115	Z-FORCE FROM STORE NO. 4, LB

TABLE 6-1. Continued

Group	Number	Description
FORCE AND MOMENT SUMMARY (Concluded)	116	ROLL MOM FROM STORE NO. 1, FT-LB
	117	ROLL MOM FROM STORE NO. 2, FT-LB
	118	ROLL MOM FROM STORE NO. 3, FT-LB
	119	ROLL MOM FROM STORE NO. 4, FT-LB
	120	PITCH MOM FROM STORE NO. 1, FT-LB
	121	PITCH MOM FROM STORE NO. 2, FT-LB
	122	PITCH MOM FROM STORE NO. 3, FT-LB
	123	PITCH MOM FROM STORE NO. 4, FT-LB
	124	YAW MOM FROM STORE NO. 1, FT-LB
	125	YAW MOM FROM STORE NO. 2, FT-LB
	126	YAW MOM FROM STORE NO. 3, FT-LB
	127	YAW MOM FROM STORE NO. 4, FT-LB
	128	NOT USED
	129	NOT USED
	130	NOT USED
	131	NOT USED
	132	NOT USED
POWER, TORQUE, CG, AND BLADE DATA	133	ROTOR 1, HORSEPOWER
	134	ROTOR 1, TORQUE, FT-LB
	135	ROTOR 1, RPM
	136	ROTOR 1, TIP SPEED, FT/SEC
	137	ROTOR 1, ADV BLADE MACH NUMBER
	138	NOT USED

TABLE 6-1. Continued

Group	Number	Description
POWER, TORQUE, CG, AND BLADE DATA (Concluded)	139	RIGHT JET, LB
	140	NOT USED
	141	C.G. STATION LINE LOCATION, IN.
	142	C.G. BUTT LINE LOCATION, IN.
	143	C.G. WATER LINE LOCATION, IN.
	144	ROTOR 2, HORSEPOWER
	145	ROTOR 2, TORQUE, FT-LB
	146	ROTOR 2, RPM
	147	ROTOR 2, TIP SPEED, FT/SEC
	148	ROTOR 2, ADV BLADE MACH NUMBER
	149	NOT USED
	150	LEFT JET THRUST, LB
	151	HORSEPOWER SUPPLIED
	152	ENGINE TORQUE SUPPLIED, FT-LB
	153	ENGINE RPM
	154	TOTAL HORSEPOWER REQUIRED
	155	TORQUE REQUIRED, FT-LB
VELOCITIES AND ACCELERATIONS	156	U VELOCITY, BODY AXES, FT/SEC
	157	V VELOCITY, BODY AXES, FT/SEC
	158	W VELOCITY, BODY AXES, FT/SEC
	159	P VELOCITY, BODY AXES, DEG/SEC
	160	Q VELOCITY, BODY AXES, DEG/SEC
	161	R VELOCITY, BODY AXES, DEG/SEC

TABLE 6-1. Continued

Group	Number	Description
VELOCITIES AND ACCELERATIONS (Concluded)	162	COLLEC. BOBWT. VELOCITY, DEG/SEC
	163	U-DOT ACCEL., BODY AXES, FT/SEC/SEC
	164	V-DOT ACCEL., BODY AXES, FT/SEC/SEC
	165	W-DOT ACCEL., BODY AXES, FT/SEC/SEC
	166	P-DOT ACCEL, BODY AXES, DEG/SEC/SEC
	167	Q-DOT ACCEL, BODY AXES, DEG/SEC/SEC
	168	R-DOT ACCEL, BODY AXES, DEG/SEC/SEC
	169	COLLEC. BOBWT. ACCEL., DEG/SEC/SEC
	170	TRUE AIR SPEED, KTS
	171	GROUND SPEED, KTS
	172	RATE OF CLIMB, FT/SEC
AERODYNAMIC SURFACES	173	STAB NO. 1 ANGLE OF INCIDENCE, DEG
	174	STAB NO. 1 FLAP ANGLE, DEG
	175	STAB NO. 1 LIFT COEFFICIENT
	176	STAB NO. 1 DRAG COEFFICIENT
	177	STAB NO. 1 PITCHING MOMENT COEF
	178	STAB NO. 1 ANGLE OF ATTACK, DEG
	179	STAB NO. 1 SIDESLIP ANGLE, DEG
	180	CLIMB ANGLE, DEG
	181	STAB NO. 2 ANGLE OF INCIDENCE, DEG
	182	STAB NO. 2 FLAP ANGLE, DEG
	183	STAB NO. 2 LIFT COEFFICIENT
	184	STAB NO. 2 DRAG COEFFICIENT

TABLE 6-1. Continued

Group	Number	Description
AERODYNAMIC SURFACES (Continued)	185	STAB NO. 2 PITCHING MOMENT COEF
	186	STAB NO. 2 ANGLE OF ATTACK, DEG
	187	STAB NO. 2 SIDESLIP ANGLE, DEG
	188	HEADING ANGLE, DEG
	189	ANGLE OF ATTACK, DEG
	190	STAB NO. 3 ANGLE OF INCIDENCE, DEG
	191	STAB NO. 3 FLAP ANGLE, DEG
	192	STAB NO. 3 LIFT COEFFICIENT
	193	STAB NO. 3 DRAG COEFFICIENT
	194	STAB NO. 3 PITCHING MOMENT COEF
	195	STAB NO. 3 ANGLE OF ATTACK, DEG
	196	STAB NO. 3 SIDESLIP ANGLE, DEG
	197	ANGLE OF SIDESLIP, DEG
	198	STAB NO. 4 ANGLE OF INCIDENCE, DEG
	199	STAB NO. 4 FLAP ANGLE, DEG
	200	STAB NO. 4 LIFT COEFFICIENT
	201	STAB NO. 4 DRAG COEFFICIENT
	202	STAB NO. 4 PITCHING MOMENT COEF
	203	STAB NO. 4 ANGLE OF ATTACK, DEG
	204	STAB NO. 4 SIDESLIP ANGLE, DEG
	205	ANGLE OF AERO YAW, DEG
	206	VERTICAL ACC, G
	207	RIGHT WING ANGLE OF INCIDENCE, DEG

TABLE 6-1. Continued

Group	Number	Description
AERODYNAMIC SURFACES (Concluded)	208	RIGHT WING FLAP ANGLE, DEG
	209	RIGHT WING LIFT COEFFICIENT
	210	RIGHT WING DRAG COEFFICIENT
	211	RIGHT WING PITCHING MOMENT COEF
	212	RIGHT WING ANGLE OF ATTACK, DEG
	213	RIGHT WING SIDESLIP ANGLE, DEG
	214	FORWARD ACC, G
	215	LEFT WING ANGLE OF INCIDENCE, DEG
	216	LEFT WING FLAP ANGLE, DEG
	217	LEFT WING LIFT COEFFICIENT
	218	LEFT WING DRAG COEFFICIENT
	219	LEFT WING PITCHING MOMENT COEF
	220	LEFT WING ANGLE OF ATTACK, DEG
	221	LEFT WING SIDESLIP ANGLE, DEG
	222	LATERAL ACC, G
DISPLACEMENTS AND EULER ANGLES AND RATES	223	YAW VELOCITY, FIXED/BODY, DEG/SEC
	224	PITCH VELOCITY, FIXED/BODY, DEG/SEC
	225	ROLL VELOCITY, FIXED/BODY, DEG/SEC
	226	X-COMP VELOCITY, FIXED AXES, FT/SEC
	227	Y-COMP VELOCITY, FIXED AXE , FT/SEC
	228	Z-COMP VELOCITY, FIXED AXES, FT/SEC
	229	TOTAL DISTANCE FLOWN, FT
	230	YAW ANGLE, FIXED/BODY, DEG

TABLE 6-1, Continued

Group	Number	Description
DISPLACEMENTS AND EULER ANGLES AND RATES (Concluded)	231	PITCH ANGLE, FIXED/BODY, DEG
	232	ROLL ANGLE, FIXED/BODY, DEG
	233	X-COMP DISP., FIXED AXES, FT
	234	Y-COMP DISP., FIXED AXES, FT
	235	Z-COMP DISP., FIXED AXES, FT
	236	ALTITUDE, FT
	237	NOT USED
	238	NOT USED
	239	NOT USED
	240	NOT USED
FLIGHT AND ROTOR CONTROLS AND ROTOR PYLON	241	COLLECTIVE STICK POSITION, PCT
	242	ROTOR 1, COLL FROM COLL STICK, DEG
	243	ROTOR 1, F/A FROM COLL STICK, DEG
	244	ROTOR 1, LAT FROM COLL STICK, DEG
	245	ROTOR 2, COLL FROM COLL STICK, DEG
	246	ROTOR 2, F/A FROM COLL STICK, DEG
	247	ROTOR 2, LAT FROM COLL STICK, DEG
	248	ROTOR 1, HUB SPRING F/A MOMENT, FT-LB
	249	ROTOR 2, HUB SPRING F/A MOMENT, FT-LB
	250	F/A CYCLIC STICK POSITION, PCT
	251	ROTOR 1, COLL FROM F/A STICK, DEG
	252	ROTOR 1, F/A FROM F/A STICK, DEG
	253	ROTOR 1, LAT FROM F/A STICK, DEG

TABLE 6-1. Continued

Group	Number	Description
FLIGHT AND ROTOR CONTROLS AND ROTOR PYLON (Continued)	254	ROTOR 2, COLL FROM F/A STICK, DEG
	255	ROTOR 2, F/A FROM F/A STICK, DEG
	256	ROTOR 2, LAT FROM F/A STICK, DEG
	257	ROTOR 1, HUB SPRING LAT MOMENT, FT-LB
	258	ROTOR 2, HUB SPRING LAT MOMENT, FT-LB
	259	LATERAL CYCLIC STICK POSITION, PCT
	260	ROTOR 1, COLL FROM LAT STICK, DEG
	261	ROTOR 1, F/A FROM LAT STICK, DEG
	262	ROTOR 1, LAT FROM LAT STICK, DEG
	263	ROTOR 2, COLL FROM LAT STICK, DEG
	264	ROTOR 2, F/A FROM LAT STICK, DEG
	265	ROTOR 2, LAT FROM LAT STICK, DEG
	266	ROTOR 1, F/A PYLON DISPLACEMENT, DEG
	267	ROTOR 2, F/A PYLON DISPLACEMENT, DEG
	268	PEDAL POSITION, PCT
	269	ROTOR 1, COLL FROM PEDAL
	270	ROTOR 1, F/A FROM PEDAL
	271	ROTOR 1, LAT FROM PEDAL
	272	ROTOR 2, COLL FROM PEDAL
	273	ROTOR 2, F/A FROM PEDAL
	274	ROTOR 2, LAT FROM PEDAL
	275	ROTOR 1, LATERAL PYLON DISPLACEMENT, DEG
	276	ROTOR 2, LATERAL PY N DISPLACEMENT, DEG

TABLE 6-1. Continued

Group	Number	Description
FLIGHT AND ROTOR CONTROLS AND ROTOR PYLON (Concluded)	277	ROTOR 1, COLL FROM SCAS + PYLON, DEG
	278	ROTOR 1, F/A FROM SCAS + PYLON, DEG
	279	ROTOR 1, LAT FROM SCAS + PYLON, DEG
	280	ROTOR 2, COLL FROM SCAS + PYLON, DEG
	281	ROTOR 2, F/A FROM SCAS + PYLON, DEG
	282	ROTOR 2, LAT FROM SCAS + PYLON, DEG
	283	ROTOR 1, F/A MAST ANGLE, DEG
	284	ROTOR 2, F/A MAST ANGLE, DEG
	285	ROTOR 1, TOTAL COLLECTIVE, DEG
	286	ROTOR 1, TOTAL F/A CYCLIC, DEG
	287	ROTOR 1, TOTAL LATERAL CYCLIC, DEG
	288	ROTOR 2, TOTAL COLLECTIVE, DEG
	289	ROTOR 2, TOTAL F/A CYCLIC, DEG
	290	ROTOR 2, TOTAL LATERAL CYCLIC, DEG
	291	ROTOR 1, LAT MAST ANGLE, DEG
	292	ROTOR 2, LAT MAST ANGLE, DEG
ROTOR FEATHERING, FLAPPING, AND FORCES, AND GUSTS	293	ROTOR 1, BLADE MEAN FEATHERING, DEG
	294	ROTOR 1, BLADE FEATHER AT PSI=0, DEG
	295	ROTOR 1, BLADE FEATHER AT PSI=90, DEG
	296	ROTOR 1, F/A FLAPPING, MAST/TPP, DEG
	297	ROTOR 1, LATERAL FLAPPING, MAST/TPP, DEG
	298	ROTOR 1, THRUST, LB
	299	ROTOR 1, H-FORCE, LB

TABLE 6-1. Continued

Group	Number	Description
ROTOR FEATHERING, FLAPPING, AND FORCES, AND GUSTS (Continued)	300	ROTOR 1, Y-FORCE, LB
	301	ROTOR 1, ADVANCE RATIO
	302	ROTOR 1, POWER COEFFICIENT
	303	ROTOR 1, THRUST COEFFICIENT
	304	ROTOR 1, INDUCED VELOCITY, FT/SEC
	305	ROTOR 2, BLADE MEAN FEATHERING, DEG
	306	ROTOR 2, BLADE FEATHER AT PSI=0, DEG
	307	ROTOR 2, BLADE FEATHER AT PSI=90, DEG
	308	ROTOR 2, F/A FLAPPING, MAST/TPP, DEG
	309	ROTOR 2, LATERAL FLAPPING, MAST/TPP, DEG
	310	ROTOR 2, THRUST, LB
	311	ROTOR 2, H-FORCE, LB
	312	ROTOR 2, Y-FORCE, LB
	313	ROTOR 2, ADVANCE RATIO
	314	ROTOR 2, POWER COEFFICIENT
	315	ROTOR 2, THRUST COEFFICIENT
	316	ROTOR 2, INDUCED VELOCITY, FT/SEC
	317	X-COMP GUST VEL., BODY AXES, FT/SEC
	318	ROTOR 1, AZIMUTH LOCATION, BLADE 1, DEG
	319	ROTOR 1, FLAPPING,HUB/MAST,BLADE 1,DEG
	320	ROTOR 1, FLAPPING LIMIT, DEG
	321	ROTOR 1, U VELOCITY, MAST AXES, FT/SEC
	322	ROTOR 1, V VELOCITY, MAST AXES, FT/SEC

TABLE 6-1. Continued

Group	Number	Description
ROTOR FEATHERING, FLAPPING, AND FORCES, AND GUSTS (Concluded)	323	ROTOR 1, W VELOCITY, MAST AXES, FT/SEC
	324	ROTOR 1, X SHEAR FORCE, LB
	325	ROTOR 1, Y SHEAR FORCE, LB
	326	ROTOR 1, Z SHEAR FORCE, LB
	327	ROTOR 1, MAST WIND-UP, DEG
	328	ROTOR 1, MAST WIND-UP RATE, DEG/SEC
	329	Y-COMP GUST VEL., BODY AXES, FT/SEC
	330	ROTOR 2, AZIMUTH LOCATION, BLADE 1, DEG
	331	ROTOR 2, FLAPPING,HUB/MAST,BLADE 1,DEG
	332	ROTOR 2, FLAPPING LIMIT, DEG
	333	ROTOR 2, U VELOCITY, MAST AXES, FT/SEC
	334	ROTOR 2, V VELOCITY, MAST AXES, FT/SEC
	335	ROTOR 2, W VELOCITY, MAST AXES, FT/SEC
	336	ROTOR 2, X SHEAR FORCE, LB
	337	ROTOR 2, Y SHEAR FORCE, LB
	338	ROTOR 2, Z SHEAR FORCE, LB
	339	ROTOR 2, MAST WIND-UP, DEG
	340	ROTOR 2, MAST WIND-UP RATE, DEG/SEC
	341	Z-COMP GUST VEL., BODY AXES, FT/SEC
FIRST ROTOR ELASTIC RESPONSE	342	AZIMUTH, ROTOR 1, BLADE 1, DEG
	343	AZIMUTH, ROTOR 1, BLADE 2, DEG
	344	AZIMUTH, ROTOR 1, BLADE 3, DEG
	345	AZIMUTH, ROTOR 1, BLADE 4, DEG

TABLE 6-1. Continued

Group	Number	Description
FIRST ROTOR ELASTIC RESPONSE (Continued)	346	AZIMUTH, ROTOR 1, BLADE 5, DEG
	347	AZIMUTH, ROTOR 1, BLADE 6, DEG
	348	AZIMUTH, ROTOR 1, BLADE 7, DEG
	349	GEN.COORD.,ROTOR 1,MODE 1,BLADE 1
	350	GEN.COORD.,ROTOR 1,MODE 1,BLADE 2
	351	GEN.COORD.,ROTOR 1,MODE 1,BLADE 3
	352	GEN.COORD.,ROTOR 1,MODE 1,BLADE 4
	353	GEN.COORD.,ROTOR 1,MODE 1,BLADE 5
	354	GEN.COORD.,ROTOR 1,MODE 1,BLADE 6
	355	GEN.COORD.,ROTOR 1,MODE 1,BLADE 7
	356	GEN.COORD.,ROTOR 1,MODE 2,BLADE 1
	357	GEN.COORD.,ROTOR 1,MODE 2,BLADE 2
	358	GEN.COORD.,ROTOR 1,MODE 2,BLADE 3
	359	GEN.COORD.,ROTOR 1,MODE 2,BLADE 4
	360	GEN.COORD.,ROTOR 1,MODE 2,BLADE 5
	361	GEN.COORD.,ROTOR 1,MODE 2,BLADE 6
	362	GEN.COORD.,ROTOR 1,MODE 2,BLADE 7
	363	GEN.COORD.,ROTOR 1,MODE 3,BLADE 1
	364	GEN.COORD.,ROTOR 1,MODE 3,BLADE 2
	365	GEN.COORD.,ROTOR 1,MODE 3,BLADE 3
	366	GEN.COORD.,ROTOR 1,MODE 3,BLADE 4
	367	GEN.COORD.,ROTOR 1,MODE 3,BLADE 5
	368	GEN.COORD.,ROTOR 1,MODE 3,BLADE 6

TABLE 6-1. Continued

Group	Number	Description
FIRST ROTOR ELASTIC RESPONSE (Continued)	369	GEN.COORD.,ROTOR 1,MODE 3,BLADE 7
	370	GEN.COORD.,ROTOR 1,MODE 4,BLADE 1
	371	GEN.COORD.,ROTOR 1,MODE 4,BLADE 2
	372	GEN.COORD.,ROTOR 1,MODE 4,BLADE 3
	373	GEN.COORD.,ROTOR 1,MODE 4,BLADE 4
	374	GEN.COORD.,ROTOR 1,MODE 4,BLADE 5
	375	GEN.COORD.,ROTOR 1,MODE 4,BLADE 6
	376	GEN.COORD.,ROTOR 1,MODE 4,BLADE 7
	377	GEN.COORD.,ROTOR 1,MODE 5,BLADE 1
	378	GEN.COORD.,ROTOR 1,MODE 5,BLADE 2
	379	GEN.COORD.,ROTOR 1,MODE 5,BLADE 3
	380	GEN.COORD.,ROTOR 1,MODE 5,BLADE 4
	381	GEN.COORD.,ROTOR 1,MODE 5,BLADE 5
	382	GEN.COORD.,ROTOR 1,MODE 5,BLADE 6
	383	GEN.COORD.,ROTOR 1,MODE 5,BLADE 7
	384	GEN.COORD.,ROTOR 1,MODE 6,BLADE 1
	385	GEN.COORD.,ROTOR 1,MODE 6,BLADE 2
	386	GEN.COORD.,ROTOR 1,MODE 6,BLADE 3
	387	GEN.COORD.,ROTOR 1,MODE 6,BLADE 4
	388	GEN.COORD.,ROTOR 1,MODE 6,BLADE 5
	389	GEN.COORD.,ROTOR 1,MODE 6,BLADE 6
	390	GEN.COORD.,ROTOR 1,MODE 6,BLADE 7
	391	TIP DEFL.OUT-OF-PLANE,ROTOR 1,BLADE 1,FT

TABLE 6-1. Continued

Group	Number	Description
FIRST ROTOR ELASTIC RESPONSE (Continued)	392	TIP DEFL.OUT-OF-PLANE,ROTOR 1,BLADE 2,FT
	393	TIP DEFL.OUT-OF-PLANE,ROTOR 1,BLADE 3,FT
	394	TIP DEFL.OUT-OF-PLANE,ROTOR 1,BLADE 4,FT
	395	TIP DEFL.OUT-OF-PLANE,ROTOR 1,BLADE 5,FT
	396	TIP DEFL.OUT-OF-PLANE,ROTOR 1,BLADE 6,FT
	397	TIP DEFL.OUT-OF-PLANE,ROTOR 1,BLADE 7,FT
	398	TIP DEFL. INPLANE,ROTOR 1,BLADE 1,FT
	399	TIP DEFL. INPLANE,ROTOR 1,BLADE 2,FT
	400	TIP DEFL. INPLANE,ROTOR 1,BLADE 3,FT
	401	TIP DEFL. INPLANE,ROTOR 1,BLADE 4,FT
	402	TIP DEFL. INPLANE,ROTOR 1,BLADE 5,FT
	403	TIP DEFL. INPLANE,ROTOR 1,BLADE 6,FT
	404	TIP DEFL. INPLANE,ROTOR 1,BLADE 7,FT
	405	TIP TWIST DEFL.,ROTOR 1,BLADE 1,DEG
	406	TIP TWIST DEFL.,ROTOR 1,BLADE 2,DEG
	407	TIP TWIST DEFL.,ROTOR 1,BLADE 3,DEG
	408	TIP TWIST DEFL.,ROTOR 1,BLADE 4,DEG
	409	TIP TWIST DEFL.,ROTOR 1,BLADE 5,DEG
	410	TIP TWIST DEFL.,ROTOR 1,BLADE 6,DEG
	411	TIP TWIST DEFL.,ROTOR 1,BLADE 7,DEG
	412	VERTICAL HUB SHEAR,ROTOR 1,BLADE 1,LB
	413	VERTICAL HUB SHEAR,ROTOR 1,BLADE 2,LB
	414	VERTICAL HUB SHEAR,ROTOR 1,BLADE 3,LB

TABLE 6-1. Continued

Group	Number	Description
FIRST ROTOR ELASTIC RESPONSE (Continued)	415	VERTICAL HUB SHEAR,ROTOR 1,BLADE 4,LB
	416	VERTICAL HUB SHEAR,ROTOR 1,BLADE 5,LB
	417	VERTICAL HUB SHEAR,ROTOR 1,BLADE 6,LB
	418	VERTICAL HUB SHEAR,ROTOR 1,BLADE 7,LB
	419	INPLANE HUB SHEAR,ROTOR 1,BLADE 1,LB
	420	INPLANE HUB SHEAR,ROTOR 1,BLADE 2,LB
	421	INPLANE HUB SHEAR,ROTOR 1,BLADE 3,LB
	422	INPLANE HUB SHEAR,ROTOR 1,BLADE 4,LB
	423	INPLANE HUB SHEAR,ROTOR 1,BLADE 5,LB
	424	INPLANE HUB SHEAR,ROTOR 1,BLADE 6,LB
	425	INPLANE HUB SHEAR,ROTOR 1,BLADE 7,LB
	426	BEAM BEND.MOMENT,ROTOR 1,BLADE 1,IN-LB
	427	BEAM BEND.MOMENT,ROTOR 1,BLADE 2,IN-LB
	428	BEAM BEND.MOMENT,ROTOR 1,BLADE 3,IN-LB
	429	BEAM BEND.MOMENT,ROTOR 1,BLADE 4,IN-LB
	430	BEAM BEND.MOMENT,ROTOR 1,BLADE 5,IN-LB
	431	BEAM BEND.MOMENT,ROTOR 1,BLADE 6,IN-LB
	432	BEAM BEND.MOMENT,ROTOR 1,BLADE 7,IN-LB
	433	CHORD BEND.MOMENT,ROTOR 1,BLADE 1,IN-LB
	434	CHORD BEND.MOMENT,ROTOR 1,BLADE 2,IN-LB
	435	CHORD BEND.MOMENT,ROTOR 1,BLADE 3,IN-LB
	436	CHORD BEND.MOMENT,ROTOR 1,BLADE 4,IN-LB
	437	CHORD BEND.MOMENT,ROTOR 1,BLADE 5,IN-LB

TABLE 6-1. Continued

Group	Number	Description
FIRST ROTOR ELASTIC RESPONSE (Concluded)	438	CHORD BEND.MOMENT,ROTOR 1,BLADE 6,IN-LB
	439	CHORD BEND.MOMENT,ROTOR 1,BLADE 7,IN-LB
	440	TORSIONAL MOMENT,ROTOR 1,BLADE 1,IN-LB
	441	TORSIONAL MOMENT,ROTOR 1,BLADE 2,IN-LB
	442	TORSIONAL MOMENT,ROTOR 1,BLADE 3,IN-LB
	443	TORSIONAL MOMENT,ROTOR 1,BLADE 4,IN-LB
	444	TORSIONAL MOMENT,ROTOR 1,BLADE 5,IN-LB
	445	TORSIONAL MOMENT,ROTOR 1,BLADE 6,IN-LB
	446	TORSIONAL MOMENT,ROTOR 1,BLADE 7,IN-LB
SECOND ROTOR ELASTIC RESPONSE	447	AZIMUTH, ROTOR 2, BLADE 1, DEG
	448	AZIMUTH, ROTOR 2, BLADE 2, DEG
	449	AZIMUTH, ROTOR 2, BLADE 3, DEG
	450	AZIMUTH, ROTOR 2, BLADE 4, DEG
	451	AZIMUTH, ROTOR 2, BLADE 5, DEG
	452	AZIMUTH, ROTOR 2, BLADE 6, DEG
	453	AZIMUTH, ROTOR 2, BLADE 7, DEG
	454	GEN.COORD.,ROTOR 2,MODE 1,BLADE 1
	455	GEN.COORD.,ROTOR 2,MODE 1,BLADE 2
	456	GEN.COORD.,ROTOR 2,MODE 1,BLADE 3
	457	GEN.COORD.,ROTOR 2,MODE 1,BLADE 4
	458	GEN.COORD.,ROTOR 2,MODE 1,BLADE 5
	459	GEN.COORD.,ROTOR 2,MODE 1,BLADE 6
	460	GEN.COORD.,ROTOR 2,MODE 1,BLADE 7

TABLE 6-1. Continued

Group	Number	Description
SECOND ROTOR ELASTIC RESPONSE (Continued)	461	GEN.COORD.,ROTOR 2,MODE 2,BLADE 1
	462	GEN.COORD.,ROTOR 2,MODE 2,BLADE 2
	463	GEN.COORD.,ROTOR 2,MODE 2,BLADE 3
	464	GEN.COORD.,ROTOR 2,MODE 2,BLADE 4
	465	GEN.COORD.,ROTOR 2,MODE 2,BLADE 5
	466	GEN.COORD.,ROTOR 2,MODE 2,BLADE 6
	467	GEN.COORD.,ROTOR 2,MODE 2,BLADE 7
	468	GEN.COORD.,ROTOR 2,MODE 3,BLADE 1
	469	GEN.COORD.,ROTOR 2,MODE 3,BLADE 2
	470	GEN.COORD.,ROTOR 2,MODE 3,BLADE 3
	471	GEN.COORD.,ROTOR 2,MODE 3,BLADE 4
	472	GEN.COORD.,ROTOR 2,MODE 3,BLADE 5
	473	GEN.COORD.,ROTOR 2,MODE 3,BLADE 6
	474	GEN.COORD.,ROTOR 2,MODE 3,BLADE 7
	475	GEN.COORD.,ROTOR 2,MODE 4,BLADE 1
	476	GEN.COORD.,ROTOR 2,MODE 4,BLADE 2
	477	GEN.COORD.,ROTOR 2,MODE 4,BLADE 3
	478	GEN.COORD.,ROTOR 2,MODE 4,BLADE 4
	479	GEN.COORD.,ROTOR 2,MODE 4,BLADE 5
	480	GEN.COORD.,ROTOR 2,MODE 4,BLADE 6
	481	GEN.COORD.,ROTOR 2,MODE 4,BLADE 7
	482	GEN.COORD.,ROTOR 2,MODE 5,BLADE 1
	483	GEN.COORD.,ROTOR 2,MODE 5,BLADE 2

TABLE 6-1. Continued

Group	Number	Description
SECOND ROTOR ELASTIC RESPONSE (Continued)	484	GEN.COORD.,ROTOR 2,MODE 5,BLADE 3
	485	GEN.COORD.,ROTOR 2,MODE 5,BLADE 4
	486	GEN.COORD.,ROTOR 2,MODE 5,BLADE 5
	487	GEN.COORD.,ROTOR 2,MODE 5,BLADE 6
	488	GEN.COORD.,ROTOR 2,MODE 5,BLADE 7
	489	GEN.COORD.,ROTOR 2,MODE 6,BLADE 1
	490	GEN.COORD.,ROTOR 2,MODE 6,BLADE 2
	491	GEN.COORD.,ROTOR 2,MODE 6,BLADE 3
	492	GEN.COORD.,ROTOR 2,MODE 6,BLADE 4
	493	GEN.COORD.,ROTOR 2,MODE 6,BLADE 5
	494	GEN.COORD.,ROTOR 2,MODE 6,BLADE 6
	495	GEN.COORD.,ROTOR 2,MODE 6,BLADE 7
	496	TIP DEFL.OUT-OF-PLANE,ROTOR 2,BLADE 1,FT
	497	TIP DEFL.OUT-OF-PLANE,ROTOR 2,BLADE 2,FT
	498	TIP DEFL.OUT-OF-PLANE,ROTOR 2,BLADE 3,FT
	499	TIP DEFL.OUT-OF-PLANE,ROTOR 2,BLADE 4,FT
	500	TIP DEFL.OUT-OF-PLANE,ROTOR 2,BLADE 5,FT
	501	TIP DEFL.OUT-OF-PLANE,ROTOR 2,BLADE 6,FT
	502	TIP DEFL.OUT-OF-PLANE,ROTOR 2,BLADE 7,FT
	503	TIP DEFL. INPLANE,ROTOR 2,BLADE 1,FT
	504	TIP DEFL. INPLANE,ROTOR 2,BLADE 2,FT
	505	TIP DEFL. INPLANE,ROTOR 2,BLADE 3,FT
	506	TIP DEFL. INPLANE,ROTOR 2,BLADE 4,FT

TABLE 6-1. Continued

Group	Number	Description
SECOND ROTOR ELASTIC RESPONSE (Continued)	507	TIP DEFL. INPLANE,ROTOR 2,BLADE 5,FT
	508	TIP DEFL. INPLANE,ROTOR 2,BLADE 6,FT
	509	TIP DEFL. INPLANE,ROTOR 2,BLADE 7,FT
	510	TIP TWIST DEFL.,ROTOR 2,BLADE 1,DEG
	511	TIP TWIST DEFL.,ROTOR 2,BLADE 2,DEG
	512	TIP TWIST DEFL.,ROTOR 2,BLADE 3,DEG
	513	TIP TWIST DEFL.,ROTOR 2,BLADE 4,DEG
	514	TIP TWIST DEFL.,ROTOR 2,BLADE 5,DEG
	515	TIP TWIST DEFL.,ROTOR 2,BLADE 6,DEG
	516	TIP TWIST DEFL.,ROTOR 2,BLADE 7,DEG
	517	VERTICAL HUB SHEAR,ROTOR 2,BLADE 1,LB
	518	VERTICAL HUB SHEAR,ROTOR 2,BLADE 2,LB
	519	VERTICAL HUB SHEAR,ROTOR 2,BLADE 3,LB
	520	VERTICAL HUB SHEAR,ROTOR 2,BLADE 4,LB
	521	VERTICAL HUB SHEAR,ROTOR 2,BLADE 5,LB
	522	VERTICAL HUB SHEAR,ROTOR 2,BLADE 6,LB
	523	VERTICAL HUB SHEAR,ROTOR 2,BLADE 7,L
	524	INPLANE HUB SHEAR,ROTOR 2,BLADE 1,LB
	525	INPLANE HUB SHEAR,ROTOR 2,BLADE 2,LB
	526	INPLANE HUB SHEAR,ROTOR 2,BLADE 3,LB
	527	INPLANE HUB SHEAR,ROTOR 2,BLADE 4,LB
	528	INPLANE HUB SHEAR,ROTOR 2,BLADE 5,LB
	529	INPLANE HUB SHEAR,ROTOR 2,BLADE 6,LB

TABLE 6-1. Continued

Group	Number	Description
SECOND ROTOR ELASTIC RESPONSE (Concluded)	530	INPLANE HUB SHEAR,ROTOR 2,BLADE 7,LB
	531	BEAM BEND.MOMENT,ROTOR 2,BLADE 1,IN-LB
	532	BEAM BEND.MOMENT,ROTOR 2,BLADE 2,IN-LB
	533	BEAM BEND.MOMENT,ROTOR 2,BLADE 3,IN-LB
	534	BEAM BEND.MOMENT,ROTOR 2,BLADE 4,IN-LB
	535	BEAM BEND.MOMENT,ROTOR 2,BLADE 5,IN-LB
	536	BEAM BEND.MOMENT,ROTOR 2,BLADE 6,IN-LB
	537	BEAM BEND.MOMENT,ROTOR 2,BLADE 7,IN-LB
	538	CHORD BEND.MOMENT,ROTOR 2,BLADE 1,IN-LB
	539	CHORD BEND.MOMENT,ROTOR 2,BLADE 2,IN-LB
	540	CHORD BEND.MOMENT,ROTOR 2,BLADE 3,IN-LB
	541	CHORD BEND.MOMENT,ROTOR 2,BLADE 4,IN-LB
	542	CHORD BEND.MOMENT,ROTOR 2,BLADE 5,IN-LB
	543	CHORD BEND.MOMENT,ROTOR 2,BLADE 6,IN-LB
	544	CHORD BEND.MOMENT,ROTOR 2,BLADE 7,IN-LB
	545	TORSIONAL MOMENT,ROTOR 2,BLADE 1,IN-LB
	546	TORSIONAL MOMENT,ROTOR 2,BLADE 2,IN-LB
	547	TORSIONAL MOMENT,ROTOR 2,BLADE 3,IN-LB
	548	TORSIONAL MOMENT,ROTOR 2,BLADE 4,IN-LB
	549	TORSIONAL MOMENT,ROTOR 2,BLADE 5,IN-LB
	550	TORSIONAL MOMENT,ROTOR 2,BLADE 6,IN-LB
	551	TORSIONAL MOMENT,ROTOR 2,BLADE 7,IN-LB

TABLE 6-1. Concluded.

The code numbers for the rotor bending moments (numbers 552 through 1391) can be expressed by the following equation:

Code Number = 420 * x + y + 7*(20 - z) + 140*m - 16

where

x = Rotor number (= 1 or 2)

y = Blade number (= 1, 2, ..., 6, or 7)

z = Blade station number (= 0, 1, ..., 18, 19 where 0 is at the root and 19 is at the 95% radius)

m = Indicator for type of bending moment (= 1 for beam, = 2 for chord, = 3 for torsional)

The printed title for the moments has the general form of

RTR x, BLD y, STA z, mmmm MOM, IN-LB

where x, y, and z are integers as defined above and mmmm is BEAM BEND, CHRD BEND, or TORS as appropriate.

For example, the code number for the torsional moment at Station 7 of Blade 3 of Rotor 1 is

420(1) + 3 + 7(20 - 7) + 140(3) - 16 = 918

and the title is

RTR 1, BLD 3, STA 7, TORS MOM, IN-LB

7. REFERENCES

1. Livingston, C. L., A STABILITY AND CONTROL PREDICTION METHOD FOR HELICOPTER AND STOPPABLE ROTOR AIRCRAFT, Bell Helicopter Company, Technical Report AFFDL-TR-69-123, Volumes I-IV, Air Force Flight Dynamics Laboratory, Air Force Systems Command, Wright-Patterson AFB, Ohio, 1970.

2. Etkin, Bernard, DYNAMICS OF FLIGHT, New York, John Wiley and Sons, Inc., 1959.

3. USAF STABILITY AND CONTROL DATCOM, Air Force Flight Dynamics Laboratory, Wright-Patterson Air Force Base, Ohio, February 1972.

4. Perkins, C. D., and Hage, R. E., AIRPLANE PERFORMANCE STABILITY AND CONTROL, John Wiley and Sons, Inc., New York, 1967.

5. Dommasch, D. O., Sherby, S. S., and Conolly, T. F., AIRPLANE AERODYNAMICS, Pitman Publishing Corporation, New York, 1967.

6. Bisplinghoff, Raymond L., Ashley, Holt, and Halfman, Robert L., AEROELASTICITY, Addison-Wesley Publishing Company, Reading, Massachusetts, 1955.

7. Silverstein, A., and Katzoff, S., DESIGN CHARTS FOR PREDICTING DOWNWASH ANGLE AND WAKE CHARACTERISTICS BEHIND PLAIN AND FLAPPED WINGS, NACA Report No. 648, 1939.

8. Young, A. D., THE AERODYNAMIC CHARACTERISTICS OF FLAPS, British Aeronautical Research Council RM No. 2622, February 1947 (also printed as R.A.E. Report Aero. 2185, August 1947).

9. McCormick, B. W., Jr., AERODYNAMICS OF V/STOL FLIGHT, Academic Press, New York, 1967.

7260-74