MERCM LIBRARY
BLDG 5250
RM C-147

AMC PAMPHLET

AMCP 706-179

ENGINEERING DESIGN HANDBOOK

EXPLOSIVES SERIES

EXPLOSIVE TRAINS

SCIENTIFIC INFORMATION
5 0510 00227930 2

HEADQUARTERS, US ARMY MATERIEL COMMAND

JANUARY 1974

DEPARTMENT OF THE ARMY
HEADQUARTERS UNITED STATES ARMY MATERIEL COMMAND
5001 Eisenhower Ave , Alexandria, VA 22304

AMC PAMPHLET
No. 706-179

15 January 1974

ENGINEERING DESIGN HANDBOOK
EXPLOSIVE TRAINS

Paragraph		Page
	LIST OF ILLUSTRATIONS	xiii
	LIST OF TABLES	xvi
	LIST OF SYMBOLS	xix
	PREFACE	xxiii
	PART ONE – FUNDAMENTAL PRINCIPLES	
	CHAPTER 1. EXPLOSIVE CHARGES AS COMPONENTS OF WEAPON SYSTEMS	
1–1	Introduction	1–1
1–1.1	Purpose	1–1
1–1.2	The Explosive Train	1–1
1–1.2.1	Functions and Types	1–1
1–1.2.2	Low Explosive Train	1–2
1–1.2.3	High Explosive Train	1–2
1–1.2.4	Typical High Explosive Train	1–3
1–1.3	Explosives	1–4
1–1.3.1	Low Explosives	1–4
1–1.3.2	High Explosives	1–4
1–1.4	Bases for Selecting Explosive Charges	1–4
1–2	Systems Approach to Ammunition	1–7
1–2.1	Vehicular Aspects	1–7
1–2.1.1	General	1–7
1–2.1.2	Aerodynamic Heating	1–7
1–2.1.3	Acceleration	1–9
1–2.2	Structural Aspects	1–10
1–2.2.1	Neglecting the Strength of the Explosive	1–10
1–2.2.2	Consequences of Structural Failure of Explosive Charges	1–10
1–2.2.3	Structural Components as Sources of Fragments	1–11
1–2.2.4	Interaction of Structure With Explosive Materials	1–11

*This pamphlet supersedes AMCP 706-179, March 1965.

TABLE OF CONTENTS (Con't.)

Paragraph		Page
1–2.3	Mechanical Aspects	1–11
1–2.3.1	Functioning	1–11
1–2.3.2	Location With Respect to Target	1–12
1–2.3.3	Safing and Arming Devices	1–12
1–2.4	Electrical Aspects	1–13
1–2.4.1	Environments	1–13
1–2.4.2	Possible Initiation of the Main Bursting Charge	1–13
1–2.4.3	Electric Initiators Exposed to Spurious Signals	1–13
1–3	General Design Considerations	1–13
1–3.1	Reliability	1–14
1–3.2	Safety	1–14
1–3.3	Economics	1–15
1–3.4	Standardization	1–15
1–3.5	Human Factors Engineering	1–16
	References	1–16

CHAPTER 2. EXPLOSIVE REACTIONS AND INITIATION

2–1	Thermal Decomposition and Burning	2–1
2–1.1	Thermal Decomposition	2–1
2–1.2	Reaction Kinetics	2–2
2–1.3	The "Hot Spot" Theory of Initiation	2–3
2–1.4	Deflagration	2–5
2–2	Detonation	2–6
2–2.1	Transition from Deflagration to Detonation	2–6
2–2.1.1	Transition Process	2–6
2–2.1.2	Growth of Detonation in Primary High Explosives	2–7
2–2.1.2.1	Lead Styphnate	2–7
2–2.1.2.2	Lead Azide	2–7
2–2.1.3	Growth of Detonation in Secondary High Explosives	2–7
2–2.2	Shock Waves	2–9
2–2.3	Detonation Waves	2–11
2–2.3.1	Equations of State	2–11
2–2.3.2	Chapman-Jouguet Conditions for Ideal Detonation	2–12
2–2.3.3	Actual Detonation	2–13
2–3	Initiation	2–15
2–3.1	Establishing a Self-propagating Reaction	2–15
2–3.2	Initiation by Heat	2–17
2–3.2.1	Hot Wire Electric Initiators	2–17

TABLE OF CONTENTS (Con't.)

Paragraph		Page
2–3.2.2	Conductive Film Electric Initiators ..	2–18
2–3.2.3	Conductive Explosive Mix Electric initiators	2–19
2–3.2.4	Transmission of Hot Gas	2–19
2–3.2.5	Transmission of Hot Particles	2–20
2–3.2.6	Adiabatic Compression	2–20
2–3.3	Initiation by Impact	2–21
2–3.3.1	Impact Sensitivity Measured With Laboratory Machines	2–2I
2–3.3.2	Stab Initiation	2–21
2–3.3.3	Percussion Initiation.....	2–22
2–3.4	Initiation by Other Means	2–23
2–3.4.1	Friction	2–23
2–3.4.2	Electric Sparks.....	2–24
2–3.4.3	Exploding Wires	2–24
2–3.4.4	Laser and Light	2–26
2–3.4.5	Spontaneous Detonation	2–26
2–3.4.6	Shock Through a Bulkhead	2–26
	References	2–27

CHAPTER 3. DETONATION TRANSFER AND OUTPUT

3–1	Effectiveness of One Charge in Initiating Another	3–1
3–1.1	Detonation Propagation	3–1
3–1.2	Dimensional Interactions	3–1
3–2	Sensitivity to Initiation	3–3
3–2.1	Sensitivity Tests	3–3
3–2.1.1	Standard Tests	3–3
3–2.1.2	Gap Tests.....	3–4
3–2.2	Variables Affecting Sensitivity	3–6
3–2.2.1	Loading Density	3–6
3 .2.2.2	Lot-to-lot Variations	3–7
3–2.2.3	Additives	3–7
3–2.2.4	Confinement	3–8
3–2.2.5	Gaps and Barriers.....	3–9
3–2.3	Misaligned Charges	3–10
3–3	output	3–10
3–3.1	Nature of Explosive Output.....	3–10
3–3.2	Effect of Charge Configuration	3–11
3–3.2.1	The Detonation Front	3–11
3–3.2.2	Wave Shaping	3–12
3–3.3	Blast	**3–13**
3–3.4	Fragmentation	3–14
3–3.4.1	Fragmentation Characteristics	3–14
3–3.4.2	Controlled Fragmentation	3–16

TABLE OF CONTENTS (Con't.)

Paragraph		Page
3–3.5	Other Output Effects	3–16
3–3.5.1	Underwater	3–16
3–3.5.2	Underground	3–17
3–3.5.3	Shaped Charge	3–17
	References	3–18

CHAPTER 4. ENVIRONMENTAL RESPONSE

4–1	Military Requirements	4–1
4–2	Temperature	4–2
4–2.1	High Temperature Storage	4–2
4–2.1.1	Chemical Decomposition	4–2
4–2.1.2	Dimensional Change	4–4
4–2.1.3	Explosive Property Change	4–5
4–2.1.4	Exudation	4–5
4–2.1.5	Effects in Initiators	4–5
4–2.2	Cook-off	4–6
4–2.2.1	Threshold Conditions	4–6
4–2.2.2	Cook-off Experiments	4–7
4–2.2.3	Simulation of Aerodynamic Heating	4–8
4–2.3	Other Effects of High Temperature Use	4–8
4–2.3.1	Melting of Explosives	4–8
4–2.3.2	Sensitization	4–9
4–2.4	Low Temperature Storage and Use	4–10
4–3	Environment	4–11
4–3.1	Chemical Interactions	4–11
4–3.2	Simulation of Impact	4–12
4–3.2.1	Laboratory Impact Tests	4–12
4–3.2.2	Bullet Impact	4–12
4–3.2.3	Mass Impact	4–13
4–3.3	Setback Acceleration	4–14
4–3.3.1	The Occurrence of Setback	4–14
4–3.3.2	The Setback Mechanism	4–14
4–3.4	Other Effects	4–16
4–3.4.1	Vibration	4–16
4–3.4.2	Friction	4–16
4–3.4.3	Electricity	4–16
4–3.4.4	Irradiation	4–17
	References	4–17

PART TWO _DESIGN CONSIDERATIONS
CHAPTER 5. PRIMERS AND DETONATORS

5–1	Description and Selection	5–1
5–1.1	Introduction	5–1
5–1.2	Function and Construction	5–1

TABLE OF CONTENTS (Con't.)

Paragraph		Page
5–1.3	Initiator Types	5–2
5–1.3.1	Stab Initiators	5–2
5–1.3.2	Percussion Primers	5–2
5–1.3.3	Flash Detonators	5–2
5–1.3.4	Relays	5–2
5–1.3.5	Electric Initiators	5–2
5–1.3.6	Squibs	5–3
5–1.3.7	Grouping of Initiator Types	5–3
5–1.4	Bases for Selecting an Initiator Type	5–4
5–2	Input Characteristics	5–6
5–2.1	Stab Initiators	5–6
5–2.1.1	Initiation	5–6
5–2.1.2	Effects of Disk and Cup Thickness	5–6
5–2.1.3	Effects of Test Apparatus	5–6
5–2.2	Percussion Primers	5–7
5–2.2.1	Initiation	5–7
5–2.2.2	Sealing Disks and Cups	5–7
5–2.2.3	Other Variables	5–7
5–2.3	Flash Detonators	5–8
5–2.3.1	Initiation	5–8
5–2.3.2	Effect of Explosive at Input End	5–8
5–2.3.3	Effect of Construction at Input End	5–8
5–2.4	Electric Initiators	5–9
5–2.4.1	Input Sensitivity	5–9
5–2.4.2	Hot Bridgewire Initiators	5–9
5–2.4.2.1	Flash Charge Explosives	5–9
5–2.4.2.2	Bridgewire Resistance	5–10
5–2.4.2.3	Firing Energy and Power	5–10
5–2.4.2.4	Response Times	5–11
5–2.4.2.5	Typical Design Problem	5–12
5–2.4.3	Exploding Bridgewire Initiators	5–13
5–2.4.3.1	Bridgewire Dimensions and Materials	5–14
5–2.4.3.2	Explosive Materials	5–14
5–2.4.4	Film Bridge Initiators	5–14
5–2.4.4.1	Initiation Mechanism	5–14
5–2.4.4.2	Graphite Bridge Films	5–15
5–2.4.5	Conductive Mix Initiators	5–15
5–2.4.6	Spark Gap Initiators	5–15
5–2.4.7	Squibs	5–15
5–2.5	Through-bulkhead Initiators	5–16
5–3	output	5–16
5–3.1	Output of Primers	5–16
5–3.2	Output of Detonators	5–18
5–3.2.1	Parameters of Detonator Output	5–18
5–3.2.2	Measurement of Detonator Output	5–19

TABLE OF CONTENTS (Con't.)

Paragraph		Page
5–3.2.3	Explosives Used in Detonators	5–19
5–3.2.3.1	Intermediate Charges	5–19
5–3.2.3.2	Base Charges	5–20
5–3.2.3.3	Explosive Quantities and Dimensions	5–21
5–3.2.3.4	Loading Density of Explosives	5–21
5–3.2.3.5	Confinement of Explosives	5–21
5–4	Construction and Fabrication	5–22
5–4.1	Initiator Cups	5–22
5–4.2	Explosive Loading	5–23
5–4.3	Mechanical Initiators	5–24
5–4.3.1	Stab and Flash Initiators	5–24
5–4.3.2	Percussion Primers	5–24
5–4.4	Electric Initiators	5–25
5–4.4.1	Initiator Plugs	5–25
5–4.4.2	Bridging Techniques	5–25
5–4.4.2.1	Soldered Bridges on Raised Terminals	5–25
5–4.4.2.2	Flush Soldered Bridges	5–25
5–4.4.2.3	Welded Bridges	5–25
5–4.4.2.4	Graphite Film Bridges	5–26
5–4.4.3	Bridgewire Materials	5–26
5–4.4.4	Spark Gap Plugs	5–26
5–4.4.5	Flash and Spotting Charges	5–26
	References	5–27

CHAPTER 6. DELAY ELEMENTS

6–1	Description	6–1
6–1.1	Function and Construction	6–1
6–1.2	Delay Types	6–1
6–1.2.1	Obturated (Sealed) Delays	6–1
6–1.2.2	Vented Delays	6–2
6–1.2.3	Ring-type Delay	6–2
6–1.2.4	Delays Achieved by Methods Other Than Controlled Rate Burning	6–3
6–2	Delay Compositions	6–3
6–2.1	Gas-producing Delay Charges	6–3
6–2.1.1	Loading Pressure	6–3
6–2.1.2	Pellet Support	6–4
6–2.1.3	Effects of Moisture and Temperature	6–4
6–2.1.4	Obturated Delays	6–4
6–2.1.5	Vented Delays	6–5
6–2.2	Gasless Delay Charges	6–5
6–2.2.1	Delay Compositions	6–5
6–2.2.2	Ignition Powders	6–6

TABLE OF CONTENTS (Con't.)

Paragraph		Page
6–2.2.3	Properties of Delay and Ignition Powders	6–6
6–2.2.3.1	Properties of Interest	6–6
6–2.2.3.2	Burning Rates	6–7
6–2.2.3.3	Effects of Temperature and Storage	6–8
6–2.2.3.4	Effects of Reduced Pressure	6–9
6–2.2.3.5	Effects of Acceleration	6–9
6–2.2.3.6	Particle Size	6–9
6–2.2.4	Design, Fabrication, and Loading	6–9
6–2.2.4.1	Loading Pressure	6–9
6–2.2.4.2	Column Diameter	6–9
6–2.2.4.3	Wall Thickness	6–10
6–3	Design Principles	6–10
6–3.1	Obturated vs Vented Design	6–10
6–3.2	Design Rules of Thumb	6–11
	References	6–11

CHAPTER 7. LEADS AND BOOSTERS

7–1	Description	7–1
7–1.1	General	7–1
7–1.2	Functions	7–1
7–1.2.1	Leads	7–1
7–1.2.2	Boosters	7–2
7–1.3	Explosives	7–2
7–2	Design Considerations	7–4
7–2.1	Relation to Fuze Design	7–4
7–2.2	Leads	7–5
7–2.2.1	Length	7–5
7–2.2.2	Diameter and Confinement	7–5
7–2.3	Boosters	7–6
7–2.4	Charge Density Effects	7–7
7–2.5	Output Wave Profile	7–8
7–3	Construction and Fabrication	7–9
7–3.1	Loading Techniques	7–9
7–3.2	Short Leads	7–10
7–3.3	Long Leads	7–11
7–3.4	Boosters	7–11
	References	7–13

CHAPTER 8. MAIN BURSTING CHARGES

8–1	Description	8–1
8–1.1	Function	8–1
8–1.2	Typical Main Bursting Charges	8–1

TABLE OF CONTENTS (Con't.)

Paragraph		Page
8–1.2.1	High Explosive (HE) Ammunition . . .	8–1
8–1.2.2	High Explosive Antitank (HEAT) and High Explosive Plastic (HEP) Ammunition	8–2
8–1.2.3	Chemical Ammunition	8–2
8–1.2.4	High Explosive Incendiary (HEI) Ammunition	8–2
8–1.2.5	Cluster Ammunition	8–2
8–1.3	Size and Weight	8–2
8–2	Explosives	8–4
8–2.1	Selection	8–4
8–2.2	Explosive Loading	8–5
8–2.3	Inert Simulants	8–6
8–3	Initiation	8–6
8–3.1	Sensitivity	8–6
8–3.2	Booster Position	8–7
8–3.3	Auxiliary Boosters and Boosted Surrounds	8–7
8–3.4	Confinement	8–7
	References	8–8

CHAPTER 9. OTHER EXPLOSIVE CHARGES

9–1	Actuators	9–1
9–1.1	Description	9–1
9–1.2	Output Characteristics	9–2
9–1.3	Explosive Bolts	9–2
9–1.3.1	High-explosive Bolts	9–3
9–1.3.2	Low-explosive Bolts	9–3
9–1.3.3	Explosive Nuts	9–4
9–2	Demolition Devices and Accessories	9–4
9–2.1	Destructors	9–4
9–2.2	Explosive Cords. Caps. and Sheets	9–5
9–2.2.1	Explosive Cord	9–5
9–2.2.2	Flexible Linear Shaped Charge	9–6
9–2.2.3	Blasting Caps	9–6
9–2.2.4	Sheet Explosive	9–6
9–2.3	Demolition Blocks	9–6
	References	9–7

CHAPTER 10. LOADING AND FABRICATION

10–1	Process Selection	10–1
10–2	Casting	10–1
10–2.1	Projectile Preparation	10–1

TABLE OF CONTENTS (Con't.)

Paragraph		Page
10–2.2	Effect of Casting Procedure on Charge Characteristics	10–2
10–2.2.1	Porosity and Cavitation	10–2
10–2.2.2	Crystal Size	10–2
10–2.2.3	Uniformity of Composition	10–2
10–2.3	Standard Casting Procedure	10–2
10–2.4	Some Special Casting Techniques	10–3
10–2.4.1	Pellet Casting	10–3
10–2.4.2	Vacuum Melting and Casting	10–3
10–2.4.3	Vibration. Jolting. and Centrifugal Casting	10–4
10–2.4.4	Controlled Cooling	10–4
10–2.4.5	Extrusion	10–4
10–2.4.6	Liquid Explosives	10–4
10–3	Pressing	10–4
10–3.1	Standard Procedures	10–4
10–3.1.1	Measurement of Explosive Charges	10–4
10–3.1.2	Direct Pressing in Case	10–5
10–3.1.3	Stop vs Pressure Loading	10–6
10–3.1.4	Pelletizing	10–9
10–3.1.5	Reconsolidation	10–10
10–3.2	Special Procedures	10–10
10–3.2.1	Vacuum Pressing	10–10
10–3.2.2	Hot Pressing	10–10
10–3.2.3	Hydrostatic and Isostatic Pressing	10–11
10–3.2.4	Pulsating Pressures	10–11
10–4	Finishing Operations	10–12
10–4.1	Machining	10–12
10–4.2	Cementing of Compound Charges	10–13
10–5	Suitability	10–13
10–5.1	Availability	10–13
10–5.2	Output Characteristics	10–14
10–5.3	Sensitivity	10–14
10–5.4	Chemical and Physical Properties	10–15
10–6	Quality Assurance	10–16
10–6.1	Bases for Tolerances	10–16
10–6.2	Factors Affecting Quality of Explosive Charges	10–17
10–6.2.1	Density	10–17
10–6.2.2	Cracks and Cavities	10–18
10–6.2.3	Composition Variation	10–18
	References	10–18

CHAPTER 11. PACKING. STORING. AND SHIPPING

11–1	Packing	11–1

TABLE OF CONTENTS (Con't.)

Paragraph		Page
11–1.1	General	11–1
11–1.2	Packing of Explosive Train Components	11–2
11–1.2.1	Hazard Classification	11–2
11–1.2.2	Packing Considerations	11–2
11–1.2.3	Packing of Small Explosive Components	11–2
11–1.3	Packing of Related Material	11–3
11–1.3.1	Bulk Explosives	11–3
11–1.3.2	Assembled Ammunition	11–3
11–2	Storing	11–3
11–2.1	Hazard Classification	11–3
11–2.2	Storage Considerations	11–4
11–3	Shipping	11–5
11–3.1	Hazard Classification	11–5
11–3.2	Shipping Considerations	11–5
11–3.3	Considerations for Specific Modes of Shipping	11–6
11–3.3.1	Rail Transport	11–6
11–3.3.2	Truck Transport	11–6
11–3.3.3	Ship Transport	11–6
11–3.3.4	Air Transport	11–6
	References	11–6

CHAPTER 12. EVALUATION PROCEDURES

12–1	Considerations in Evaluations	12–1
12–1.1	Safety and Reliability Procedures	12–1
12–1.1.1	Statistical Inferences	12–1
12–1.1.2	Frequency Distributions	12–2
12–1.1.3	Confidence Levels	12–4
12–1.1.4	Reliability Determination from Mean and Deviation	12–4
12–1.1.5	Optimization	12–6
12–1.2	Statistical Test Methods	12–6
12–1.2.1	General Considerations	12–6
12–1.2.2	Staircase Method. The Bruceton Test	12–7
12–1.2.3	Frankford Run-down Method	12–8
12–1.2.4	Probit. Normit. and Logit Procedures	12–8
12–2	Testing Techniques	12–8
12–2.1	Explosive Materials	12–8
12–2.1.1	General	12–8
12–2.1.2	Sensitivity	12–9
12–2.1.2.1	Impact Test	12–9
12–2.1.2.2	Friction Pendulum Test	12–10
12–2.1.2.3	Rifle Bullet Impact Test	12–10

TABLE OF CONTENTS (Con't.)

Paragraph		Page
12–2.1.2.4	Explosion Temperature Test	12–10
12–2.1.2.5	Gap Tests	12–10
12–2.1.2.6	Setback Pressure Test	12–10
12–2.1.2.7	Impact Vulnerability Test	12–10
12–2.1.2.8	Bomb Drop Test	12–11
12–2.1.2.9	Cook-off Temperature Tests	12–11
12–2.1.2.10	Electrostatic Sensitivity Test	12–11
12–2.1.2.11	Differential Thermal Analysis	12–11
12–2.1.2.12	Thermogravimetric Analysis	12–12
12–2.1.2.13	Hot Wire Ignition Test	12–13
12–2.1.2.14	Thermal Detonability Test	12–13
12–2.1.3	output	12–13
12–2.1.3.1	Detonation Velocity	12–13
12–2.1.3.2	Detonation Pressure	12–14
12–2.1.3.4	Brisance	12–15
12–2.1.3.5	Blast	12–15
12–2.1.3.6	Ballistic Mortar	12–15
12–2.1.3.7	Trauzl Test	12–15
12–2.1.3.8	Underwater Shock	12–15
12–2.1.4	Stability	12–16
12–2.2	Input	12–16
12–2.2.1	Mechanical Initiators	12–16
12–2.2.2	Electric Initiators	12–16
12–2.2.2.1	Condenser Discharge Test	12–16
12–2.2.2.2	Voltage Sensitivity	12–17
12–2.2.2.3	Steady Current Functioning	12–17
12–2.2.3	Gaps and Barriers	12–17
12–2.3	output	12–18
12–2.3.1	Detonation	12–18
12–2.3.1.1	Sand Test	12–18
12–2.3.1.2	Lead Disk Test	12–18
12–2.3.1.3	Steel Dent Test	12–19
12–2.3.1.4	Aluminum Dent Test	12–19
12–2.3.1.5	Hopkinson Bar Test	12–19
12–2.3.1.6	Velocity of the Air Shock	12–19
12–2.3.1.7	Detonation Pressure Measured by Means of Shock Transducers	12–20
12–2.3.2	Nondetonating Items	12–20
12–2.3.2.1	Primer Output	12–20
12–2.3.2.2	Special Primer Output Parameters	12–21
12–2.3.2.3	Mechanical Output	12–21
12–2.4	Environment	12–21
	References	12–22
	GLOSSARY	G–1

TABLE OF CONTENTS (Con't.)

Paragraph		Page
	GENERAL REFERENCES	R–1
R–1	Introduction	R–1
R–2	General References	R–1
R–3	Journal Articles of the JANAF Fuze Committee Pertaining to Explosive Trains	R–2
R–4	Military Specifications on Explosives and Explosive Compositions	R–3
	INDEX	I–1

LIST OF ILLUSTRATIONS

Fig. No.	Title	Page
1–1	Typical Low Explosive Train	1–2
1–2	Typical High Explosive Train	1–3
2–1	Computed Explosive Reaction Rates	2–3
2–2	Arrangement Used in Observations of Detonation Growth	2–7
2–3	Formation and Incipient Decay of Shock Wave from Wave of Finite Amplitude	2–11
2–4	Energy-power Relationship for Various Initiators	2–16
2–5	Typical Effect of Bridgewire Volume on Input Characteristics	2–17
2–6	Threshold Conditions for Initiation of Various Explosives in a Shock Tube	2–20
2–7	Initiation by Adiabatic Compression	2–21
2–8	Input Sensitivity vs Explosion Temperature	2–22
2–9	Standard Firing Pin for Stab Initiators	2–22
2–10	Energy-velocity Relationship for Percussion Primers	2–23
2–11	Schematic of Typical TBI	2–27
3–1	Streak Camera Record of Detonation	3–2
3–2	Critical Gap as a Function of Column Diameter	3–2
3–3	Critical Axial Air Gaps Across Which Detonation Is Transmitted Between Lead Azide and Tetryl	3–3
3–4	Small Scale Air Gap Test	3–5
3–5	Minimum Priming Charge and Gap for Critical Propagation	3–5
3–6	Small Scale Lucite Gap Test	3–6
3–7	Effect of Voids on Booster Sensitivity (Wax Gap Test)	3–7
3–8	Effect of Voids on Booster Sensitivity (Lucite Gap Test)	3–8
3–9	Effect of Acceptor Confining Material upon Sensitivity in an Air Gap Test	3–9
3–10	Gap Sensitivity Related to Density and Hardness of Acceptor Confining Medium	3–10
3–11	Arrangement for Propagation of Misaligned Charges	3–11
3–12	Line Wave Generator of the Manifold Type	3–12
3–13	Line Wave Generator of Sheet Explosive	3–13
3–14	Line Wave Generator of Warped Sheet of Explosive	3–13
3–15	Pressure-time Relationship of Explosive Blast	3–14

LIST OF ILLUSTRATIONS (Con't.)

Fig. No.	Title	Page
4–1	Postulated Condition for Initiator Failure Caused by Wire-explosive Separation	4–6
4–2	Test of a Booster in Simulated Missile Flight	4–7
4–3	Cook-off Characteristics of Three Explosives	4–8
4–4	Simulated Aerodynamic Heat Test	4–10
4–5	Typical Time-acceleration Curve for Projectile While in Gun	4–14
5–1	Typical Primers and Detonators (Mechanical)	5–3
5–2	Typical Explosive Relays	5–3
5–3	Typical Primers and Detonators (Electrical)	5–4
5–4	Electric "Mini" Detonator	5–5
5–5	Electric Squib. M2	5–6
5–6	Stab-electric Detonator. T29	5–6
5–7	Functioning Times of Hot Wire Bridge Initiators	5–13
5–8	Initial TBI Configuration for Saturn V Launch Vehicle	5–17
5–9	Comparison of TBI Parameters	5–18
5–10	Coined Bottom Cup	5–23
5–11	Punch Trimming of Initiator Cups	5–23
5–12	Initiator Cup Crimping	5–24
6–1	Obturated Delay Element of Bomb Fuze. ANM100A2	6–2
6–2	Electric Delay Detonator. MARK 35 MOD 1	6–3
6–3	Electric Delay Detonator. T65	6–3
6–4	Sealing Methods for Vented Delays	6–3
6–5	Fuze M54	6–4
6–6	Pressure Type Delay	6–4
6–7	Support of Delay Pellet	6–5
6–8	Characteristics of an Obturated Black Powder Delay Element	6–6
7–1	Booster. M21A4	7–2
7–2	2.75-in. HEAT Rocket With Spit-back Explosive System	7–3
7–3	20 mm Fuze. M505	7–4
7–4	Critical Conditions for Detonation of Lead	7–7
7–5	Lead Pellets Held in Place by Staked-in Closure Disk	7–11
7–6	Lead Retained by a Feature of Fuze Design	7–11
7–7	Lead Retained by a Cup	7–12
7–8	Explosive Loaded by Breaking Off Excess	7–12
7–9	Lead End Coated With Sealant	7–12
7–10	Lead Cup Crimped in Place	7–12
7–11	Chamfered Booster Pellet	7–13

LIST OF ILLUSTRATIONS (Con't.)

Fig. No.	Title	Page
7–12	Improper Charging of Cup	7–13
8–1	High Explosive Projectile	8–2
8–2	Armor-piercing Projectile	8–3
8–3	General Purpose Bomb	8–3
8–4	Antitank Mine. M15	8–4
8–5	High Explosive Antitank Projectile	8–4
8–6	Burster Type Chemical Projectile	8–5
9–1	Motor. Dimple. T3E1	9–2
9–2	Motor. Bellows. T5E1	9–2
9–3	Driver. Explosive. MARK 12 MOD 0	9–3
9–4	Switch. Squib Actuated. Non Delay. XM60	9–4
9–5	Pyroswitch	9–4
9–6	Explosive Bolt in Which Reflected Tension Waves Are Utilized	9–5
9–7	Destructor. Universal. M 10	9–5
10–1	Vacuum Casting Kettle	10–4
10–2	Scoop Loading	10–5
10–3	Charging Plate Loading	10–5
10–4	Detonator Loading Tool	10–6
10–5	Tool for Direct Loading of Component	10–7
10–6	Nomograph of Loading Pressure and Density	10–8
10–7	Pelleting Presses	10–9
10–8	Vacuum Pressing Apparatus	10–11
10–9	Hydrostatic Press Principle	10–12
10–10	Isostatic Press Principle	10–12
11–1	Packing Box for Small Explosive Components	11–3
11–2	Illustration of Data in Ref. 4	11–5
12–1	Cumulative Frequency Distribution for a Normally Distributed Population	12–3
12–2	Skewed Frequency Distribution Typical of Impact Sensitivity Data	12–3
12–3	Picatinny Arsenal Impact Test Apparatus	12–9
12–4	Gap Test Set-up	12–11
12–5	Apparatus Which Simulates Setback Pressure	12–12
12–6	Thermogram of Ammonium Nitrate	12–13
12–7	Method of d'Autriche for the Measurement of Detonation Velocity	12–14
12–8	Typical Condenser Discharge Firing Circuit for Testing Electric Initiators	12–18
12–9	Principle of Hopkinson Bar Measurement of Detonator Output	12–20
12–10	Arrangement for Detonator Safety Test	12–22

LIST OF TABLES

Table No.	Title	Page
1–1	Common High Explosive Materials	1–5
1–2	Values of Acceleration in Ammunition	1–10
2–1	Ignition and Explosion Temperatures	2–4
2–2	Values of the Constant G in Eq. 2-3.	2–6
2–3	Optimum Loading Densities and Particle Sizes for Growth of Detonation in RDX, HMX, and PETN	2–8
2–4	Detonation Velocity Constants for Eq. 2-17	2–13
2–5	Detonation Conditions, Calculated and Measured	2–14
2–6	Sensitivity of Various Explosives in Wire Bridge Initiators	2–19
2–7	Effect of Loading Pressure on Initiator Sensitivity	2–23
2–8	Initiation of Explosion by Friction of PETN in the Presence of Grit	2–24
2–9	Threshold Ignition Energies	2–25
3–1	Densities and Shock Velocities in Various Metals	3–4
3–2	Typical Results of Booster Sensitivity Test	3–4
3–3	Initiation Sensitivity Measured by Several Tests	3–5
3–4	Relation of Decibangs to Gap Thickness	3–6
3–5	Sensitivities of Some Explosives According to the Small Scale Lucite Gap Test	3–7
3–6	Effect of 5 Percent D-2 Wax on the Booster Sensitivity of Various Cast Explosives (Wax Gap Test)	3–8
3–7	Air Gap Sensitivity Related to Acoustic Impedance of Acceptor Confining Medium	3–9
3–8	Sensitivity for Various Spacer Materials (Wax GapTest)	3–11
3–9	Gurney Constants for Common Explosives	3–15
4–1	Environmental Requirements for Military Materiel	4–2
4–2	Relative Sensitivities of Explosives According to Standard Laboratory Tests of Ground Samples	4–3
4–3	Sensitivity of Explosives to Hazards of Use	4–4
4–4	Cook-off Tests of Standard and Modified M47 Detonators	4–9
4–5	TNT Impact Sensitivity Variation With Temperature	4–9
4–6	Compatibility of Common Explosives and Metals	4–12

LIST OF TABLES (Con't.)

Table No.	Title	Page
4–7	Bullet Sensitivity of 50/50 Pentolite	4–13
4–8	Temperatures Reached by Air When Compressed Adiabatically	4–15
4–9	Critical Setback Pressures of Explosives of Various Base Separations	4–15
4–10	Data Obtained From Explosives After Exposure to Gamma Radiation	4–18
5–1	Common Priming Compositions	5–7
5–2	Effects of Cup or Sealing Disk on Sensitivity	5–8
5–3	Resistivities of Bridgewire Materials	5–10
5–4	Firing Times of Hot Bridgewire Initiators	5–12
5–5	Heats of Explosion and Detonation Pressures	5–21
6–1	Gasless Delay Compositions in Current Use	6–7
6–2	Ignition Powders for Gasless Delay Elements	6–8
6–3	Burning Rates of Gasless Delay Compositions	6–8
6–4	Effect of Loading Pressure on $BaCrO_4$-B Compositions	6–10
6–5	Failure Diameter Variation of Manganese Compositions at −65°F	6–10
7–1	Failure Diameters of Lead and Booster Explosives	7–6
8–1	Preferred Use of Main Explosives	8–6
10–1	Loading Density of Various Explosives	10–7
10–2	Fundamental Characteristics of Explosive Compounds	10–15
10–3	Fundamental Characteristics of High Explosive Mixtures	10–16
12–1	Safety and Reliability Related to Deviations From the Mean	12–5

LIST OF SYMBOLS

A	constant, Hz or dimensionless
A'	inverse function of the resistance to motion of an atom, sec/°K
a	acceleration, g
B	Brinell hardness
B	constant
C	capacitance, μF
C	heat capacity, W-sec/°C or cal/g-°C
c_o	velocity of sound, ft/sec
D	detonation velocity, ft/sec
d	diameter, in.
E	activation energy, cal/mole
E	modulus of elasticity, lb/in.^{2}
E	voltage, V
$\sqrt{2E}$	Gurney constant, ft/sec
F	constant
G	empirical constant
G	gap, in.
g	acceleration due to gravity, ft/sec^2
h	thickness, in. or cm
I	current, A
I_s	current to fire lead styphnate, A
K	constant
k	thermal conductivity, cal/sec-cm-°C

LIST OF SYMBOLS (Con't.)

k'	reaction rate, Hz
L	length, in.
M	Mach number
m	mass
n	number
n	polytropic exponent
P	pressure, psi
R	burning rate, ft/sec
R	resistance, ohm
R	roentgen
R	universal gas constant, cal/°K-mole
r	radius, in.
r_w	bridgewire resistivity, microhm-cm
T	temperature, °K, °C, or "F
t	time, sec
u	velocity of material relative to undisturbed medium, ft/sec
V	voltage, V
V	volume, in.^{3}
v	velocity, ft/sec
v	velocity of material relative to the wave front, ft/sec
W	weight, lb or mg
w	energy, erg
X	sensitivity stimulus, gap decibang
α	covolume of gas, in.^{3}
γ	cooling rate coefficient, W/°C

LIST OF SYMBOLS (Con't.)

Y	failure rate
γ	ratio of specific heats
μ	$(\gamma - 1)/(\gamma + 1)$
ρ	density, g/cm^3

SUBSCRIPTS

a	acceptor charge
c	case, charge, cord
d	delay composition, detonation
f	firing temperature
i	ideal, insulation
ℓ	long
M	confining medium
m	measured, metal
o	reference condition, initial
P	priming composition
r	recovery, reference
s	short, stagnation
t	threshold, test specimen, transmitted, total
w	wire

PREFACE

The Engineering Design Handbooks of the US Army Materiel Command have evolved over a number of years for the purpose of making readily available basic information, technical data, and practical guides for the development of military equipment. The present handbook is one of a series on explosives.

This publication is the first revision of the Handbook, *Explosive Trains.* Extensive changes were made to update the volume. Illustrations of sample devices, references, and test data were brought up to date. Outdated material was replaced with current information and the organization was changed to conform to present practice. A new chapter was added on packing, shipping, and storing and the treatment of main charges, safety, setback and testing techniques was enlarged.

This handbook presents theoretical and practical data pertaining to explosive trains. It includes consideration of the various elements which, in considerable variation, may constitute the explosive train of an item. The main charge of an explosive item, such as projectile or warhead filler, is also covered. Data are given on the physical and explosive characteristics of typical explosives and references are cited in which additional data are found.

Coverage includes development of the complete explosive train, from elements suitable for initiation of the explosive reaction to the promotion of effective functioning of the final, output element. The nature of the explosive reaction, method of transfer of detonation and measurement of output are discussed. Design principles and data pertaining to primers, detonators, delay elements, leads, boosters, main charges and specialized explosive elements are covered. The effects of environmental conditions and steps to be taken to avoid difficulties are discussed.

Prepared as an aid to ammunition designers, this handbook should also be of benefit to scientists and engineers engaged in other basically related research and development programs or who have reponsibility for the planning and interpretation of experiments and tests concerning the performance of ammunition or ammunition components.

The handbook was prepared by The Franklin Institute Research Laboratories, Philadelphia, Pennsylvania. It was written for the Engineering Handbook Office of Duke University, prime contractor to the Army Research Office-Durham. Its preparation was under the technical guidance and coordination of a special committee with representation from Picatinny Arsenal and Frankford Arsenal of the Munitions Command, and the Ballistic Research Laboratories. Chairman of this committee was Mr. Donald Seeger of Picatinny Arsenal.

The Engineering Design Handbooks fall into two basic categories, those approved for release and sale, and those classified for security reasons. The Army Materiel Command policy is to release these Engineering Design Handbooks to other DOD activities and their contractors and other Government agencies in accordance with current Army Regulation 70-31, dated 9 September 1966. It will be noted that the majority of these Handbooks can be obtained from the National Technical Information Service (NTIS). Procedures for acquiring these Handbooks follow:

a. Activities within AMC, DOD agencies, and Government agencies other than DOD having need for the Handbooks should direct their request on an official form to:

Commander
Letterkenny Army Depot
ATTN: AMXLE-ATD
Chambersburg, PA 17201

b. Contractors and universities must forward their requests to:

National Technical Information Service
Department of Commerce
Springfield, VA 22151

(Requests for classified documents must be sent, with appropriate "Need to Know" justification, to Letterkenny Army Depot.)

Comments and suggestions on this Handbook are welcome and should be addressed to:

Commander
US Army Materiel Command
ATTN: AMCRD-TV
Alexandria, VA 22304

(DA Forms 2028, Recommended Changes to Publications, which are available through normal publications supply channels, may be used for comments/suggestions.)

EXPLOSIVE TRAINS*

PART ONE — FUNDAMENTAL PRINCIPLES

CHAPTER 1

EXPLOSIVE CHARGES AS COMPONENTS OF WEAPON SYSTEMS

1-1 INTRODUCTION

1-1.1 PURPOSE

This handbook is one in the series of Engineering Design Handbooks dealing with explosives. It covers the principles and factors applicable to the design of the various individual elements that are parts of an explosive train. These elements include primers, detonators, relays, delays, leads, boosters and main bursting charges. In addition, principles and factors involved in the design of explosive items such as actuators, explosive switches and destructors, that are usually not elements of the main explosive train of a military item, are mentioned, particularly where the principles differ from those applicable to the main train.

The phenomena of initiation, deflagration, and detonation and their interaction with effects produced in surrounding materials are discussed with particular emphasis on those aspects that are important to designers of explosive charges. Also discussed are evaluation procedures, loading methods, and the effects of design upon the probability of accidental initiation, upon reliability, and upon the useful life of an item.

1-1.2 THE EXPLOSIVE TRAIN

1-1.2.1 FUNCTIONS AND TYPES

An explosive train is an assembly of combustible and explosive elements arranged in the order of decreasing sensitivity, inside a fuze, projectile, bomb, gun chamber, or the like†. The function of the explosive train is to accomplish the controlled augmentation of a small impulse into one of suitable energy to cause the main charge of the ammunition to function.

Explosive trains may be divided into two general classes, *high explosive trains* and *low explosive trains,* according to the type of explosive used in the main charge. An explosive train may also be designated according to the item in which it is assembled or to which it pertains. One of the most common examples of the high explosive trains is the *fuze explosive train.* If the bursting charge is added, it is commonly called a *bursting charge explosive train.* A common example of the low explosive train is the *propelling charge explosive train.*

*Revised by Gunther Cohn, The Franklin Institute Research Laboratories, Philadelphia, Penna.

†For more detailed definitions of explosive material, see the Glossary at the end of this handbook.

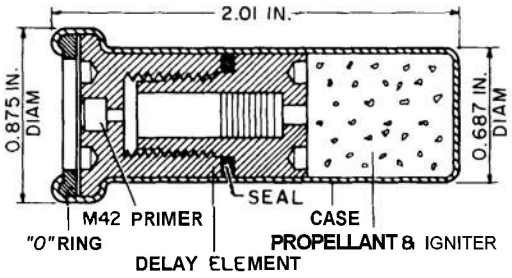

Figure 1-1. Typical Low Explosive Train

The explosive or combustible elements of an explosive train are so arranged that:

1. They can be activated in the desired manner,

2. On functioning, they will produce the desired effect reliably, and

3. The probability of premature functioning is minimized for all foreseeable conditions of handling, storage, transport, and use.

1-1.2.2 LOW EXPLOSIVE TRAIN

A low explosive train in its simplest has only two essential elements:

1. A primary explosive charge in the form of primer, igniter, or ignition charge, and

2. A main propelling or other gas generating charge.

In addition, the train may have a delay composition to provide a time delay. The initiator cartridge, shown in Fig. 1-1[1]*, is a typical low explosive train. It consists of a primer, delay element, and main charge. Propelling charge explosive trains and other low explosive trains are covered in detail in Ref. 1. Unless otherwise indicated, the term *explosive train* in this handbook signifies a *high explosive train*.

*Numerical references are listed at the end of each chapter.

1-1.2.3 HIGH EXPLOSIVE TRAIN

Essential elements of a high explosive train are:

1. A primary or low explosive charge, contained in a suitable housing, that is capable of (1) being activated by a relatively small stimulus (mechanical or electrical) and (2) producing a self-propagating reaction. The output of this initial charge consists principally of relatively low velocity hot gases and particles.

2. An intermediate charge of primary high explosive (most commonly lead azide) in which the transition from burning to detonation takes place.

3. A secondary high explosive charge (for example, RDX) that intensifies the shock output from the intermediate charge, and

4. A main charge consisting of a secondary high explosive (for example, TNT) that produces the desired effect.

Auxiliary elements that are almost always included in an explosive train for convenience of design and for special purposes are:

1. Leads and relays to transmit explosive reactions between spatially separated elements,

2. Delay or time element to increase the interval between activation of the first explosive element and functioning of the main charge, and

3. A booster that is sensitive enough to be initiated by relatively small output of a secondary high explosive charge and powerful enough to initiate the insensitive secondary high explosive usually used for the main charge.

At times it is possible to combine several functions of these elements into a single unit. When arranging the elements in the train, the

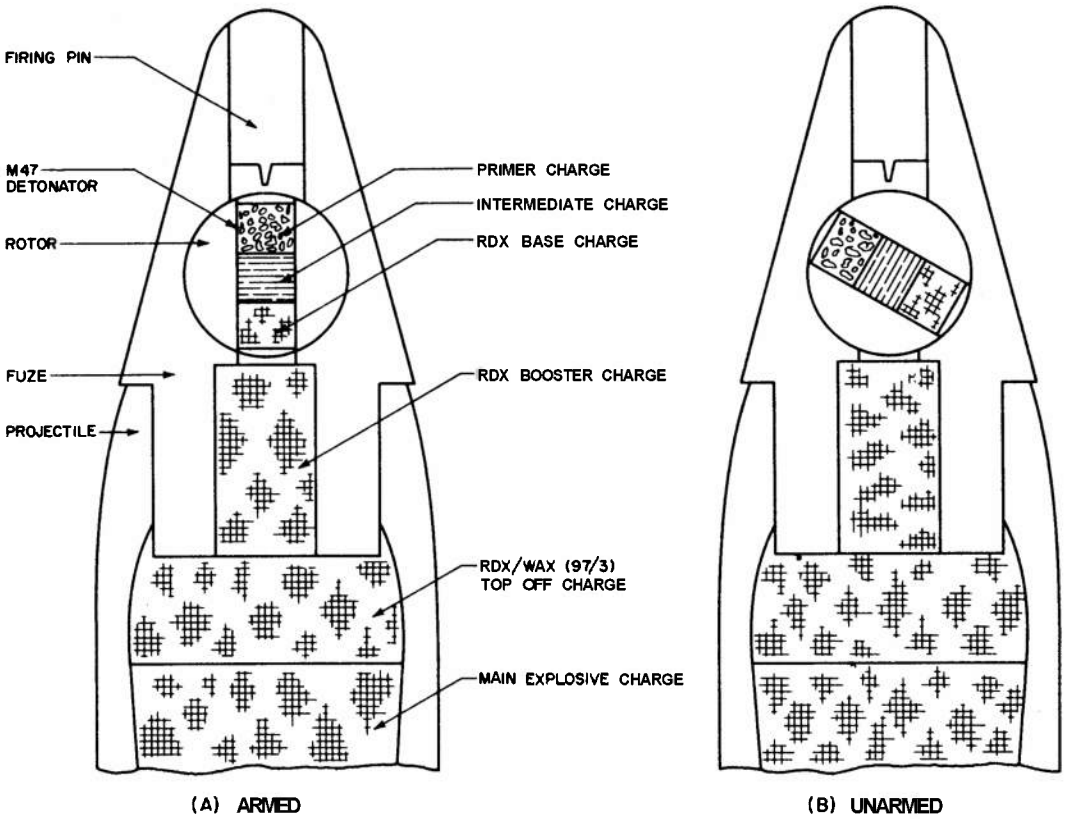

Figure 1-2. Typical High Explosive Train

more sensitive components are always separated from the more powerful by a safing and arming device (see par. 1-2.3.3).

A number of auxiliary elements are used in some military devices, viz., actuators, explosive bolts, and destructors. Complete explosive trains in themselves, they are designed to perform a specific task.

1-1.2.4 TYPICAL HIGH EXPLOSIVE TRAIN

Fig. 1-2 shows a simple high explosive train. Pictured in schematic form is the M505 Nose Fuze that is used with 20 mm ammunition. The fuze is shown in both armed and unarmed conditions but details of mechanical construction have been omitted. While important, these features are beyond the scope of this handbook (for an assembly drawing of this fuze, see Fig. 7-3).

In the armed condition, the fuze is ready to function. When it strikes the target, the following sequence of actions take place:

1. The stab firing pin strikes the input end of the M47 Detonator, piercing the thin metal disk and pushing into the primer charge. This stabbing causes a reaction to be initiated in the primer charge.

2. The primer charge initiates the intermediate charge of lead azide that is also contained in the detonator. Here the action is accelerated and converted to a detonation.

3. The detonation of the lead azide is transmitted to the RDX base charge of the detonator and is amplified.

4. The RDX booster and top off charges (if any) serve to amplify the detonation wave to insure proper initiation of the main charge in the projectile.

In a superquick fuze, such as this one, this entire sequence takes place in only a few microseconds, whereas in a fuze having delayed action, the interval between activation of the primer charge and explosion of the main charge may be as much as several hundred milliseconds. Such a delay may be introduced by a special pyrotechnic charge, which burns at a definite rate, between primer and intermediate charges.

The rotor in which the detonator is assembled is aligned with the remainder of the explosive train through the action of linear and rotational forces encountered during propelling the projectile from the gun. In the unarmed view (Fig. 1-2(B)) the fuze is in the *safe* or out-of-line position. The purpose of this safety feature of fuzes is to isolate physically the more sensitive explosives of the explosive train from the main charge. Since the more sensitive explosives are more susceptible to accidental initiation, they will not propagate to the main charge, if initiated, when they are in the out-of-line position (see par. 1-2.3.3).

1-1.3 EXPLOSIVES

A detailed discussion of explosive materials is not within the scope of this handbook. For information on explosive chemistry, see Ref. 2 and for information on explosives used by the military, see Refs.* b, c, and d. On the other hand, the explosive train designer requires an intimate knowledge of what explosives to use and how these explosives react. Explosives are divided into two groups, low and high.

1-1.3.1 LOW EXPLOSIVES

An explosive is classified as a low explosive when the rate of advance of the chemical reaction zone into the unreacted explosive is less than the velocity of sound through the undisturbed material. When used in its normal manner, low explosive burns or deflagrates rather than detonates. Low explosives are divided into two groups: (1) gas-producing low explosive including propellants, certain primer mixtures, igniter mixtures, black powder, photoflash powders, and certain delay compositions, and (2) nongas-producing low explosives including the gasless type delay compositions.

The reaction of low explosives is covered in par. 2-1. In fuze explosive trains, low explosives are limited to priming compositions (see Table 5-1) and delay compositions (see Table 6-1).

1-1.3.2 HIGH EXPLOSIVES

An explosive is classified as a high explosive when the rate of advance of the chemical reaction zone into the unreacted explosive exceeds the velocity of sound through this explosive. This rate of advance is termed the detonation rate for the explosive under consideration. High explosives are divided into the groups: (1) primary high explosives that are characterized by their extreme sensitivity to initiation by both heat and shock, and (2) secondary high explosives that are initiated only by relatively high intensity shock.

The reaction of high explosives is covered in par. 2-2. Common high explosive materials are summarized in Table 1-1. Fundamental properties are listed in Tables 10-2 and 10-3 and the Military Specification numbers for these materials are listed in par. R-4.

1-1.4 BASES FOR SELECTING EXPLOSIVE CHARGES

When the designer is ready to build an explosive train, he must make a number of decisions. Before he can select the explosive charges, he must have a clear idea of the input stimulus that will be used to start his system and of the final output the system is to have. Between these two extremes, he must assem-

*Lettered references are listed in the General References at the end of this handbook.

TABLE 1-1

COMMON HIGH EXPLOSIVE MATERIALS

Use	Normally Used	Acceptable for Mixtures	Use Only for Special Applications
Primer	Lead azide Lead styphnate basic or normal	Antimony sulfide Barium nitrate Lead sulfocyanate Nitrocellulose Tetracene	Diazodinitrophenol (DDNP) Mannitol hexanitrate Nitrostarch
Detonator*	Lead Azide HMX PETN RDX Tetryl		Same as above
Lead or Booster	Comp. A-5 DIPAM HNS PBXN-5 RDX Tetryl		Cyclotol Pentolite Pressed TNT PETN
Main Charge	Comp. A-3 Comp. B H6 HBX3 Minol-2 Octol TNT Tritonal		Comp. A-4 Comp. B-3, B-4, B-5 Comp. C-4 Cyclotol DBA-22M PBXN-101, 103

*If the detonator includesthe function of a primer, it will contain one or more of the primary explosives.

ble a variety of explosive components. This complete system will then make up the explosive train.

Since the objective of the explosive train is to function the main bursting charge, it is logical to consider it first. This charge is designed so as to deliver the output that is required of the ammunition. While the output is invariably specified for all design requirements, it is usually given in terms that the explosive charge designer cannot use directly.

Specifications start with the user who has a requirement. For example the user may want to defeat a tank, to cause personnel casualties, or to produce a signal. Next, the ammunition designer translates these needs into terms of specific ammunition. He may call for a 90 mm HEAT round to be fired from a recoilless rifle, a nonmetallic mine to be triggered by foot pressure, or a marker projectile delivering a red smoke puff lasting for *20* sec. At this point, the explosive charge designer takes over. He will specify the weight and configuration of the main high explosive charge in the HEAT projectile, the amount of charge in the mine and, together with the ammunition designer, will fix the size of the mine to result in the desired effects, or he will specify the weight and configuration of the **HE** burster charge and the composition of the chemicals to produce the smoke puff.

Where the design calls for high explosives in a projectile, bomb, or the like for which caliber is either specified or the shape of which is fixed by ballistic considerations, the

task of designing the output charge is fairly straightforward. The given container is filled with as much explosive as will fit. Seventy percent of the total weight of a light-case bomb, for example, is high explosive filler. Design principles for blast (par. 3-3.3) and for fragmentation (par. 3-3.4) are well established. Explosives for chemical charges must burst the case and efficiently disseminate the contents. The design of main charges is discussed in pars. 8-2 and 8-3.

At the other end of the train is the initiator. Selection and design of the proper first element in the explosive train is probably the most difficult step. For this reason., this subject is treated in depth by itself (par. 5-1.4). The design of initiators is covered in pars. 5-1 to **5-4.**

It is a basic safety requirement in ammunition that the initiator be kept out of line so that the train will not propagate in the event of ,accidental functioning of the sensitive initiator. While the explosive charge designer is definitely concerned with such safety devices, they are not included in this handbook. The design, construction, layout, and evaluation of the various safety and arming devices are covered in texts on fuze designs.

The next element to be considered is the booster charge. Most high explosive ammunition has boosters. The booster is that charge which is sensitive enough to be actuated by the small explosive elements on the one hand and powerful enough to cause detonation of the main explosive on the other hand. Tetryl, RDX, and HMX are common explosives which have these properties. The booster charge is best placed into a cavity of the main charge (the fuze well). The design of boosters is covered in pars. 7-1 to **7-3.**

From the standpoint of train propagation, a booster pellet is all that is required. However, for reasons of safety and versatility, some military ammunition calls for a complete booster containing its own detonator and out-of-line arming device. This secondary train is designed in the same manner as the main train.

So far, we have considered main charges and boosters at the output end and initiators at the input end. These three form the basic elements required in every train. If the explosive train is for a small device, no additional charges are necessary. Additional charges are added only to fill a particular need. Note also that blasting caps, which contain a large output charge, obviate a booster in demolition charges.

If there is to be a time interval between initiation and functioning of the train, a delay element is inserted. Often a relay is required at the end of the delay to transform the deflagration of the burning delay into a detonation wave. Delay elements are described in pars. 6-1 to **6-3.**

A common explosive train charge is the lead. Because of the geometry required to achieve bore safety, detonator (or relay) and booster are separated too far for the detonation wave to travel. This gap is filled with a lead. Leads contain the same explosives as boosters. Leads are covered in pars. 7-1 to **7-3.**

Sometimes functions other than initiation of the main charge are required. Actuators exert a force through a small distance to activate controls or to close switches. Small and reliable, they are ideally suited for remote control. Explosive bolts and destructors are other examples of devices serving auxiliary functions. These designs are covered in pars. 9-1 and 9-2.

Good design practice must be applied to all explosive charges and to their assembly into a train. Charges must be of the proper geometry and sensitivity and must have the correct density and confinement as discussed in par. 3-2.2. They must be compatible with other explosives and with metal parts. They must be safe to handle and must stand the extremes of temperature in storage and use as discussed in pars. 4-1 to 4-3. The design of explosive

charges that make up safe and reliable trains has not yet been reduced to a formula. Rather, it requires considerable experience. The design of unusual trains, in particular, should never be attempted by a novice.

After the design is completed, the train is ready for thorough test and evaluation as discussed in par. 12-2.

1-2 SYSTEMS APPROACH TO AMMUNITION

1-2.1 VEHICULAR ASPECTS

1-2.1.1 GENERAL

Most ammunition is projected to its target over appreciable distances. Both maximum velocities and ranges continue to increase with improvements in propellants and design. Four aspects of this motion must be considered by the designer of explosive charges:

1. Range and accuracy of a projectile depend upon its aerodynamic characteristics. The external contours dictated by aerodynamic considerations are a limitation upon size and shape of the explosive system.

2. It is sometimes necessary to adapt the design of explosive charges in order to distribute the weight properly for flight stability.

3. Velocities and flight times of many modern missiles are such that aerodynamic heating has introduced a whole new set of explosive-charge-design problems.

4. Acceleration forces during launching, flight, and impact are the principal sources of the structural loading of ammunition.

In addition to these more or less general consequences of the functioning of military items as vehicles, it is necessary for the designer of explosive charges to consider special circumstances that may arise as a result of transport systems. Accelerations due to the mechanical action of rapid-fire guns and launchers are sometimes quite appreciable and have been known to produce undesirable results when they were not taken into consideration during design. Chambers of rapid-fire weapons are heated in the course of long bursts to temperatures that can cause functioning of rounds that remain in them when firing stops.

The limitations on explosive charge design imposed by the first two listed aspects are those of dimensions and spatial configuration. They are usually clearly stated in design specifications or military requirements for explosive charges. Effects of aerodynamic heating and acceleration forces, however, usually are not obvious from a glance at the drawings. Frequently, they can influence the functioning of ammunition.

1-2.1.2 AERODYNAMIC HEATING

Not only must an explosive system withstand high temperatures without premature functioning, it must also function effectively and reliably during or after such exposure. Insulation of explosive charges can be quite effective because the exposure time is usually so short that, with reduced heat transfer rates, the heat capacity of the explosive is sufficient to keep the temperature within bounds. However, as velocities and ranges continue to increase, the necessary amount of insulation may increase to a point where it seriously reduces the effectiveness of a warhead, both by displacing explosive and by wrapping it in a highly effective shock attenuator. The effects of high temperatures upon explosives are discussed in more detail in par. 4-2. Some of the newer explosives that are more heat resistant are not castable. The use of these materials will necessitate design changes in the carrier to facilitate either (1) consolidation of the explosive charge or (2) assembly of preformed explosive charges.

The determination of temperature profiles within ammunition items affected by aerodynamic heating is difficult, complex, and quite beyond the scope of the present discussion. It is, however, frequently possible for a

designer, by means of a few quick calculations using a simplified model of his system, to obtain a gross answer regarding the need for more detailed calculations, the substitution of explosives, or the insulation of explosive charges. The discussion that follows is intended as an aid in making such approximate calculations.

The flow conditions about an object moving through the atmosphere are most simple if they are considered in terms of a coordinate system moving with the object. In such a system, the undisturbed air is an infinite stream moving at a velocity of magnitude equal to that of the object in a system of fixed coordinates. Quite clearly, the object impedes this flow of air. By Bernoulli's principle (conservation of momentum) any reduction of the velocity of part of the stream must be accompanied by an increase in pressure. Rapid compression of a gas causes its temperature to rise. The highest temperature that may be anticipated in any point in such a system, called the stagnation temperature T_s, is that of air which has been brought to rest with respect to the object

$$T_s = T_o \ (1 + 0.2M^2), \text{"K} \qquad (1\text{-}1)$$

where

T_s = stagnation temperature, "K

T_o = temperature of the undisturbed atmosphere, "K

M = Machnumber

If the stagnation temperature is below that at which the explosive charge will suffer any ill effects, as discussed in pars. **4-2.2** and **4-2.3,** there is no problem of aerodynamic heating.

A stagnation temperature high enough to have deleterious effects upon the explosive is not necessarily reason to take special measures. Only a small fraction of the surface of a moving object is exposed to air at the stagnation temperature. The boundary layer of air in contact with the surface at points where there is an appreciable tangential flow component approaches a recovery temperature that is well below the stagnation temperature. Typical relationships of recovery temperatures T_r to stagnation temperatures are

$$\frac{T_r - T_o}{T_s - T_o} = 0.8 \text{ to } 0.9 \qquad (1\text{-}2)$$

where T_r = recovery temperature, "K.

The value of this ratio varies with velocity, position, and shape of the object.

Most ammunition that flies at speeds at which the stagnation temperature of atmospheric air is sufficient to have undesirable effects upon explosives does so for a limited time. The question as to whether the explosive materials will reach undesirably high temperatures during such an interval can be answered only by considering the heat flow into and within each component in detail.

As the stagnation temperatures rise relative to those at which explosives are stable and as designs become more intricate, the means of resolving doubts regarding whether explosive charges will survive aerodyamic heating become more laborious and less positive. The introduction of a heat barrier may turn out to be the only way in which these doubts may be removed. In some cases a simple barrier will be effective not only in protecting the explosive but it also will reduce the heat transfer analysis to simple arithmetic. For example, if a thin layer of insulation is applied to the outside of the metal case of an explosive charge, it may be assumed as a first approximation that the metal loses no heat to the explosive, that the surface coefficient of heat transfer is infinite, and that the heat capacity of the insulation is negligible. If these assumptions are made, then the heating rate of the case is

$$\frac{dT_c}{dt} = \frac{(T_r - T_c)\,k_i}{h_c\,h_i\,C_c\,\rho_c}, \text{ °C/sec} \qquad (1\text{-}3)$$

where

T_c = case temperature, "C

T_r = reference temperature, "C

t = time, sec

k_i = thermal conductivity of insulation, cal/sec-cm-°C

h_c = thickness of case, cm

h_i = thickness of insulation, cm

C_c = heat capacity of case, cal/g-°C

ρ_c = density of case material, g/cm^3

Note that all of the assumptions are conservative in the sense that they tend to make the calculated temperature rise more rapid than the real one. Thus, if these calculations lead to the conclusion that the protection against aerodynamic heating is adequate, it may be accepted with a miniumum of doubt.

Where the combination of temperature, time, space, and weight limitations results in inadequate protection of explosive materials, the use of heats of evaporation and fusion to increase the effective capacity of heat sinks has been suggested. Both the fusion of low melting alloys and the dehydration of hydrated salts have been suggested as thermal buffers. Some salts have the added virtue of expanding with dehydration to form porous insulation media.

A reasonable course for an explosive charge designer, confronted with a possible aerodynamic heating problem, might be as follows:

1. Compute the maximum stagnation temperature to which a round might be exposed,

2. If possible without compromising other features of this design, choose an explosive that will survive this temperature,

3. If doubt remains regarding survival of aerodynamic heating, make a conservative estimate of the heating rate based either on a simplified model or experimental data for an analogous system, and

4. If doubt remains at this point, give serious consideration to the use of insulation or heat sinks.

5. Testing of the system may be required.

1-2.1.3 ACCELERATION

As vehicles, ammunition items must, of course, be accelerated. In some instances the magnitudes of the accelerations are great. To the designer of explosive charges, accelerations are a source of structural loading which applies inherently to all masses including that of the explosive material. Accelerations associated with changes in the momentum along the line of flight are always variable, usually impulsive, while centrifugal accelerations of spin-stabilized projectiles remain nearly steady during the time of flight.

When considering the effects of acceleration of ammunition, its variability must also be considered. On the one hand, it is often possible to reduce peaks by use of shock absorber principles. On the other hand, the rapid changes can result in impact forces of much greater magnitude than those due to the direct effects of gross acceleration. In considering these effects, the designer should obtain the best estimate available of the time-acceleration function to which his device will be subjected. Table **1-2** lists the magnitudes of some typical accelerations of ammunition.

TABLE 1-2

VALUES OF ACCELERATION IN AMMUNITION

Ammunition and Condition of Exposure	Typical Peak Acceleration, g	Direction
Projectile setback when fired in gun	50,000	Axial
Projectile piercing armor	-150,000	Axial or Oblique
Projectile loaded into automatic gun	-1,000	Axial
Projectile loaded into artillery	10,000	Transverse
Rocket or missile, normal launch	100	Axial
Rocket or missile, gun launched	30,000	Axial
Missile steering	40	Transverse
Missile flight vibration	10	Random
Mine water entry	-2,500	Axial

Note: Forward acceleration is conventionally assigned a positive value.

1-2.2 STRUCTURAL ASPECTS

1-2.2.1 NEGLECTING THE STRENGTH OF THE EXPLOSIVE

To sustain accelerations and still retain their functional capability as explosive charges and mechanisms, ammunition must be designed with full recognition of its functions as a structure. The time-honored practice of neglecting the strength of the explosive material, i.e., of designing the container to hold a liquid of the density of the explosive, can greatly simplify structural design and is generally quite conservative. It may not always result in the best design and, in some cases, it is inapplicable because:

1. The strengths of explosives are far from negligible and those of some materials are quite appreciable. The strengths of cast explosives are on the order of 2000 psi (compressive) and 200 psi (tensile). Those of plastic bonded explosives are somewhat higher.

2. The resistance of the explosive material to plastic deformation can result in a load distribution on the container that is very different from that computed by assuming the explosive to behave as a liquid.

3. In many applications, explosive performance could be improved by a smaller metal-to-explosive ratio from that dictated by design in which the strength of the explosive is neglected. Improvement may also result from a different spatial configuration in which the strength of the explosive is utilized.

4. Some applications require metal so thin and soft as to have little value as a structural member.

5. The resistance to deformation and eventual failure of an explosive material under stress could result in impact forces much higher than those calculated using the hydrostatic approximation.

For these reasons it is always best, and sometimes necessary, to design an explosive item as a composite structure or, at least, to consider the effects of its behavior as such.

1-2.2.2 CONSEQUENCES OF STRUCTURAL FAILURE OF EXPLOSIVE CHARGES

Obviously, those charges whose output characteristics are closely associated with their geometrical configurations, such as shaped charges, will not function properly if the geometry is altered by structural failure. Other consequences of structural failure may be more serious when they occur. Although available evidence indicates that high mechanical stresses are, in themselves, incapable of initiating explosive reactions, movement under high stress—particularly the rather sudden movement resulting from a structural failure—provides a mechanism for the development of hot spots that may become reaction nuclei (see par. 2-1.3). Where the failure results in the relative movement of two adjacent metal members with explosive in between, action similar to an impact or friction sensitivity test (where the explosives are pinched, ground, or impacted) may result in premature initiation.

The initiating trains of ammunition are generally composed of a series of rather small charges that communicate detonation only when properly spaced and accurately aligned. Hence, a structural failure can result in either premature functioning or complete failure.

1-2.2.3 STRUCTURAL COMPONENTS AS SOURCES OF FRAGMENTS

In many types of ammunition, notably artillery fragmentation projectiles, the case serves two somewhat contradictory functions: that of the principal structural member and that of the source of fragments. In the one role it has to hold together under high gun acceleration and centrifugal stresses; in the other it must fly apart in a prescribed manner. The high strength that holds it together in the gun also absorbs a significant amount of the energy liberated when the explosive detonates. The choice of a structure and configuration conducive to optimum fragmentation may unduly weaken it. The charge-to-case weight ratio that is best for fragmentation may afford too little metal for structural stability. In addition, the aerodynamic considerations of stability and range are involved. The design of such a projectile is a compromise of interior, exterior, and terminal ballistic considerations (discussed in par. **3-3**). In other types of fragment-producing ammunition, where structural or aerodynamic considerations are less stringent, the designer has more freedom to adapt shape, construction, and material to obtain optimum fragmentation.

1-2.2.4 INTERACTION OF STRUCTURE WITH EXPLOSIVE MATERIALS

In addition to the interaction of explosives and inert parts to form a composite structure and their interaction to produce output effects, important interactions between explosives and inerts are involved in initiation, growth, and propagation of detonation. The pinching, grinding, and impact resulting from the relative movement of inert components in contact with explosives are, of course, essential phases of the operation of stab and percussion initiators. The phenomena involved in such initiation processes are discussed in par. **2-3.**

The importance of confinement in every phase of the initiation, growth, and propagation of explosive reactions cannot be overstressed. A change in the confining medium can change the critical value of a dimension by a factor of ten or more. Various aspects of the effects of confinement upon explosive reactions art? discussed in practically all paragraphs of this handbook.

Consideration of the role of an explosive material as a component of the structure and of its interaction with, inert structural components from the conceptual stage onward probably will avoid some problems in the testing and evaluation stages.

1-2.3 MECHANICAL ASPECTS

1-2.3.1 FUNCTIONING

In the sense that their useful output is generally in the form of mechanical work, explosive charges are mechanical devices. However, the explosive charge designer must also consider those aspects of the mechanical functioning of ammunition which are involved in placing it in the desired location with respect to its target, safeguarding against operation until it gets there, and initiating the reaction at the desired place and time. Both the effects of these preliminary mechanical functions on the explosives and the effects of the presence of the explosives on the functioning must be considered. Because mechanical functioning generally occurs after the ammunition has been launched, the necessary energy must be either stored in or derived from the after-launch environment of the ammunition.

Forms of stored energy which have been used include elastic (cocked springs, compressed gases), chemical (batteries, propellants, explosives), magnetic (permanent magnets), and electrical (charged condensers, piezoelectric elements). Environmental

sources include aerodynamic or hydrodynamic forces incidental to the motion of the ammunition through the ambient fluid; acceleration forces related to launching, spin, water entry, and target impact; hydrostatic forces due to changes in ambient pressure; magnetic forces related to movement with respect to the earth's field; electrical forces related to environmental potential differences (electrostatic in air and electrolytic in sea water); and thermal and radiation effects. Quite clearly, the range of forces represented is so great that exceptional precautions are necessary at the one extreme to retain nearly frictionless movement and, at the other, to protect the dormant mechanism, structure, and explosive charges from damage. For details on both stored and after-launch forces, see Ref. g.

1-2.3.2 LOCATION WITH RESPECT TO TARGET

The mechanical functions involved in placing the ammunition in the desired location with respect to its target might be considered as part of its functioning as a vehicle. However, those functions under consideration here are not so clearly vehicular functions as propulsion and flight of the item. They include such varied activities as separation of stages in multistaged weapons, jump-up action of certain antipersonnel weapons, and opening of parachutes. Some of these functions are accomplished by means of explosive actuators (par. 9-1). Where such devices are used, it is a concern of the designers of other components to safeguard against their premature initiation or other damage. In other instances, where the source (such as movement of a small bellows under the action of hydrostatic pressure) makes only a small quantity of energy available, precautions are necessary to prevent an increase in the frictional loading of the system resulting from the distortion of the weapon case, due either to dimensional instability of the explosive material or to differential thermal expansion.

1-2.3.3 SAFING AND ARMING DEVICES

It is a basic requirement that fuzes have two independent safing features, whenever possible, either of which is capable of preventing an unintended detonation before the ammunition is projected[3]. The philosophy is based on the low probability that two features will fail simultaneously. If possible, both safing features should be "fail safe" and each should be actuated by a separate force. Where launching forces are used, arming must be delayed until a safe distance is attained between the ammunition and the point of launching. These principles—combined with the wide variety of launching, propulsion, and stabilization means used, the range of after-launch environments, and the inventive ingenuity of fuze designers—have resulted in a proliferation of arming devices and schemes (see Ref. g).

The arming requirements have made necessary in some instances the use of forces that are so weak as to place very high standards on tolerances, finishes and balance of moving parts, some of which carry explosive components. The designer of explosive components for use in safing and arming mechanisms must be particularly careful to safeguard against dimensional instability of the explosive material. Any design change that results in a change in mass or in mass distribution should be considered carefully in the light of its effect upon the functioning of inertial arming systems, including rotors of fuzes for spin-stabilized devices. The effect of changes in mass distribution caused by arming operations may sometimes require examination by an exterior ballistician.

The design of a safing and arming mechanism is a three way compromise among reliability, quality control, and compactness. If the components are large enough, they can be reliable even if they vary greatly from item to item, and quite safe if far enough apart in the unarmed state. To meet the increasing demand for miniaturization, it will be necessary to improve continually (1) the standards

of reproducibility of output, (2) the sensitivity of explosive components, and (3) the techniques for their evaluation. The designer of the mechanism must lean heavily on the explosive component designer because the basic dimensions of the mechanism depend upon the characteristics of the explosive components.

1-2.4 ELECTRICAL ASPECTS

1-2.4.1 ENVIRONMENTS

The complexity of our electrical environment is staggering. Practically every insulator has a static charge. Any two dissimilar pieces of metal, wet with slightly impure water, make a battery of sorts. Weld them together and change their temperature and we have a thermal generator. Every spark plug, every switch, every thunderstorm, and all the stars keep broadcasting transients. Hence, all ammunition has, as does everything else, all sorts of small currents running through it at random at all times. In general, these currents remain so small as to have negligible heating effect. Under certain conditions, fairly high currents are possible. Electrostatic discharges and surges due to nearby strokes of lightning can also develop appreciable currents. Methods of hardening weapon systems against RF energy are discussed in detail in Ref 4.

1-2.4.2 POSSIBLE INITIATION OF THE MAIN BURSTING CHARGE

If, at some point in a circuit, spurious currents are concentrated in a relatively small path in intimate contact with explosive material, it is conceivable that a hot spot might develop and form a reaction nucleus. Analysis of such systems is too complex to undertake. This is particularly true in view of the lack of evidence that such accidentally formed electric initiators have been the cause of accidents. It is well, however, to check a design for conditions that are obviously conducive to such effects.

1-2.4.3 ELECTRIC INITIATORS EXPOSED TO SPURIOUS SIGNALS

The very nature of the design and firing mechanism of electric initiators makes them vulnerable to spurious electrical signals such as RF energy, lightning, and electrostatic charges. Pick-up of such signals can cause premature initiation or possibly dudding and thereby reduce performance reliability. Because of the extensive use of electrical initiators in modern weapon systems, great care must be taken to design them so as to reduce this vulnerability.

Several solutions have been proposed to alleviate this problem in the design stage[4]. The designer of ammunition can minimize the hazard of initiation caused by the electrical environment by following these general design practices :

1. Use of complete electrical shielding on all electric circuits subject to hazard.

2. Design of components that are specifically resistant to the spurious signals including, where applicable, the special schemes discussed in par. 5-4.4.1.

3. Proper analysis and testing under a correct simulation of service electrical environments to determine the susceptibility of a system to electrical hazards.

1-3 GENERAL DESIGN CONSIDERATIONS

While the design of the explosive component that makes up an explosive train is not a simple task, it should not be considered overwhelming. The various chapters in this handbook discuss the principles of explosive components and treat the design of specific devices. In addition to the special information given, a number of general design factors must be kept in mind. These factors—applicable to engineering design in general—are important in the design of each system component. Knowledge of the general factors, the design requirements, and the relation of the explo-

sive component to the system permits efficiency in design and the possibility of tradeoffs that may improve performance. The general factors include reliability, safety, economics, standardization, and human factors engineering.

1-3.1 RELIABILITY

Reliability is a measure of the extent to which a device behaves as it was designed to behave during the usually short period between launching, firing, or being emplaced, and completion of its mission. Obviously, reliability of ammunition and of its components is of key importance. Weapons are useless if they don't function as intended.

Reliability is defined in statistical terms. It is the probability that material will perform its intended function for a specified period under stated conditions. The problem with explosive components is more severe than that of other items for two reasons. First, they are a small part of a complex system. Since the probability that all of the components in a system will function is the product of the probabilities of the individual components, the functioning probability of explosives must be high, higher than that of the total system. This requirement calls for high reliability of explosives. Secondly explosives are one-shot devices that cannot be tested repeatedly. Special work-or-fail methods of analysis have been developed; they are described in par. 12-1.2.

The evaluation of materiel, including estimation of its reliability, is usually carried out by an organization, or at least a group, other than the design group. Difficulties between these groups can be resolved more readily if the designer of explosive devices is familiar with the techniques used by evaluators, uses similar techniques to assure himself that his designs are reliable, and designs devices and systems in which reliability is as nearly inherent as possible. A few general suggestions can be made for the designer:

1. Whenever possible, use standard components with established quality level and other reliability criteria at least as high as that required by the application.

2. Wherever possible, particularly in more complex and expensive materiel, use redundant systems.

3. Specify materials for which the properties of importance to your application are well known and reproducible. Keep in mind that the average value for a parameter may be less important for design purposes than the extreme values.

4. As far as possible, design items in such a manner that defects which affect reliability can be detected by means of nondestructive tests or inspection.

1-3.2 SAFETY

Safety is a basic consideration throughout item life. We are concerned with the extent to which a device can possibly be made to operate prematurely by any accidental sequence of events that might occur at any time between the start of its fabrication and its approach to the target.

While safety also is defined statistically, the approach to safety is somewhat different from that applied to reliability. The keystone of this approach is the fail-safe principle. Essentially, this principle states that any sequence of events other than that to which a round is subjected in normal operation shall result in failure rather than detonation of the round. Compliance with the fail-safe principle usually is accomplished mechanically, and is the reason most military devices must be considered as mechanisms.

In terms of added bulk, weight, and complexity—which can be translated into terms of reliability, effectiveness, and logistics—safety is expensive. Hence, the problem of safety is a double one. The designer must be certain that his device is safe and yet impose the least

impairment of functioning – all at minimum cost.

The preceding remarks on safety emphasize the protection against premature functioning of the initiation package. However, this is only one aspect of system safety. Another example of safety is that of protecting against direct initiation of main charge or booster by impulses incidental to handling, shipping, storage or launching, and accidents that may occur during these operations. The vulnerability of ammunition to initiation by accident or enemy fire can seriously restrict its tactical usefulness or greatly complicate problems of storage, handling, and transportation. System design can reduce this vulnerability by affording mechanical protection, support, and confinement. Hence, safety is not a separate problem but an integral part of explosive charge design.

A number of policies, rules, and safety codes that apply to various types of material have been promulgated. In view of the variety of these codes, it is well for a designer to examine in advance the safety criteria that will be applicable to his design. The designer should be familiar with the following general safety information:

1. The basic reference for safety is the *Safety Manual*[5].

2. It is a basic requirement that fuzes have two independent safing features, whenever possible, either of which is capable of preventing an unintended detonation before the ammunition is projected[3].

3. For safety considerations during packing, storing, and shipping, see pars. 11-1, 11-2, and 11-3, respectively.

4. The standard tests devised to examine the safety of explosive components are discussed in par. 12-2.4.

5. Requirements for the system safety program are covered in MIL-STD-882[6].

1-3.3 ECONOMICS

The assessment of a weapon system involves the comparison of its value with its cost. The value per round may be considered to be the product of the military value of the damage of which a round of ammunition is capable and the probability that a given round will inflict this damage. The cost of a round of ammunition includes the cost of delivering it to its target as well as that of producing it. Each of these quantities is, in itself, a complex combination of diverse factors that may include aspects of statistics, military strategy and tactics, and all branches of engineering.

The process of comparing alternative solutions to stated requirements in the terms of the value received (effectiveness) for the resources expended (costs) is called the *Cost/Effectiveness* analysis. Basically, a choice must be made between maximizing accomplishment of the objective for a given cost or minimizing the cost for achieving a given objective'.

1-3.4 STANDARDIZATION

The decision as to whether to adapt a system design to the use of a standardized component or to design a new component especially adapted to a system is often one of the most difficult a designer has to make. On the one hand, a new item often has been developed because, in the layout stage of design, it took less effort to sketch in something that fit the dimensions than to find out what was available. On the other hand, the hard and fast resolution to use only shelf items has resulted in systems that are appreciably inferior to the best attainable with regard to safety, reliability, effectiveness, or compactness, and in the perpetuation of obsolete items.

As a general rule, the standard item must always be given first preference and must be considered carefully. An important reason in explosive charge design is the cost and time

required to qualify new items (see pars. 12-1 and 12-2).

MIL-STD-320 lists a standardized series of dimensions for newly developed detonators, primers, and leads and for their components.

1-3.5 HUMAN FACTORS ENGINEERING

The science that analyzes man's role in man-machine systems is called human factors engineering. Man's capabilities and, more important, his limitations must be given careful consideration. This topic, as it relates to fuzes, is covered in AMCP 706-210[g].

The design of explosive components is also concerned with human factors engineering lest any shortcomings of the components affect the fuze, ammunition, or weapon system. Many explosive components are small, intricate devices. Care must be taken to avoid features that tend to introduce human error. Faulty assemblies caused by such errors as missing parts or parts placed upside-down can affect severely ultimate performance. Remember also that explosive components often are handled behind barriers for reasons of safety so that close scrutiny is difficult to accomplish.

Erratic performance in a particular delay train was once traced to a problem of human factors engineering. A manual assembly operation called for inserting 5 delay pellets into a deep cup, each pellet being separated by white tissue paper. Operators tended to lose count so that cups contained from 4 to 6 pellets. The problem was solved by using tissue paper of different colors for each layer.

REFERENCES

a-g Lettered references are listed in the General References at the end of this handbook.

1. AMCP 706-270, Engineering Design Handbook, *Propellant Actuated Devices.*

2. Tadeus Urbanski, *Chemistry and Technology of Explosives,* Pergamon Press, London, Vol. 1, 1964; Vol. 2, 1965; Vol. 3, 1967.

3. MIL–STD–1316, *Fuze, Design Safety, Criteria For,* Dept. of Defense, 17 September 1970.

4. AMCP 706-235, Engineering Design Handbook, *Hardening Weapon Systems Against RF Energy.*

5. AMCR 385-100 *Safety Manual,* Army Materiel Command, April 1970.

6. MIL–STD–882, *System Safety Program for Systems and Associated Subsystems and Equipment,* Dept. of Defense, 15 July 1969.

7. Robert N. Grosse, *An Introduction to Cost-Effectiveness Analysis,* Research Analysis Corp., McLean, Va., July 1965 (AD-622 112).

CHAPTER 2

EXPLOSIVE REACTIONS AND INITIATION

2-1 THERMAL DECOMPOSITION AND BURNING

2-1.1 THERMAL DECOMPOSITION

Explosives are substances or mixtures of substances which may be made to undergo a rapid chemical change, without an outside supply of oxygen, with the liberation of large quantities of energy generally accompanied by the evolution of hot gases. As metastable materials, they decompose at all temperatures above absolute zero. The rates of decomposition are direct functions of temperature. For explosives of practical interest, the decomposition rates. at normal temperatures of storage, handling, and transportation, are negligibly small. As the temperature is increased a few hundred degrees, the rates of thermal decomposition attain significant levels. The self-heating of the explosive by the heat evolved in this (exothermic) reactior tends to further raise the temperature and increase the reaction rate. Where such circumstances result in a runaway reaction, a thermal explosion may result'. Ref. 1 also presents a thorough study of the behavior of explosives.

Most explosive reactions, whether intentional or accidental, result from highly localized heating that initiates a self-propagating reaction'. In such a reaction the heat liberated by the reaction of the explosive at one point in a charge raises the temperature in adjacent material sufficiently to cause it to react at a similar rate. The modes and rates of such self-propagating reactions so profoundly affect the usable phenomena associated with the functioning of explosives that these phenomena can hardly be considered except in terms of these modes and rates.

The reaction of a typical charge of solid explosive, rigorously considered in its ultimate detail, is so complex as to defy quantitative description. Fortunately; however, the typical situation is such that one or another aspect of the behavior of the material is so dominant that other aspects may be dismissed as second order effects. Hence, although gradual thermal decomposition, deflagration, and detonation are usually chemically similar processes, their physical causes and manifestations are so different that they may be understood best by considering them as distinct phenomena. Heats of combustion and detonation are different initial phases of deflagration, which can be considered as burning or oxidation. Some explosives, however, are not readily combustible.

The rates of thermal decomposition and deflagration are related directly to temperature and pressure while detonation is related to pressure. All three reactions result in the increase of both temperature and pressure. It follows that any charge of explosive, if contained so as to prevent expansion or losses of matter or energy, will eventually explode. If the temperature is uniform throughout the charge, the reaction will be a pure thermal explosion where each element of volume experiences the same self-accelerating temperature rise. More usually, any variations in temperature will tend to exaggerate themselves so that the self-heating reaction will run away at the hottest point from which a deflagration, in turn self-accelerating, will propagate. The self-accelerating deflagration is characterized by a similarly accelerating rise in pressure, which is propagated through the unreacted explosive as a compression wave. If the charge is large enough, the wave may

develop into, a shock of sufficient amplitude to propagate as a detonation.

2-1.2 REACTION KINETICS

Perhaps the reaction of an explosive material can be understood best by trying to visualize an explosive molecule. Such a molecule is a structure containing atoms that have very strong affinities for one another, and that are prevented from responding to these affinities by their places in the structure. The positions of atoms within the structure of a molecule and that of molecules within the crystal are fixed, not by rigid links, but by equilibrium of electrostatic and quantum-mechanical exchange forces. Unless the temperature is absolute zero, each atom vibrates about its equilibrium position with a random motion under the influence of the similar random motions of its neighbors. These random motions, which are characteristic of thermal phenomena, apply to the partition of energy between molecules and between atoms of each molecule.

The average energy of molecular agitation is proportional to temperature. If, at any given absolute temperature, the agitational energy exceeds the activation energy, the atom may escape from its position in the molecule and be free to assume more congenial relationships. This uproar increases the agitation of neighboring molecules, that is to say, the reaction proceeds with the evolution of heat. The reaction rate then is the frequency with which the agitational energy of individual molecules exceeds the activation energy

$$k'(T) = A'Te^{-E/(RT)} \qquad (2\text{-}1)$$

where

k' = reaction rate, **Hz**

T = absolute temperature, °K

A' = inverse function of the restraint to motion of an atom, sec/°K

E = activation energy, cal/mole

R = universal gas constant, cal/°K-mole

The classic Arrhenius equation sets $A'T = A$ for small temperature ranges

$$k'(T) = Ae^{-E/(RT)} \qquad (2\text{-}2)$$

where A = Arrhenius constant, Hz

Eq. 2-2 is used more commonly to represent the temperature dependence of chemical reactions. For the temperature range of most experiments, the difference between Eqs. 2-1 and 2-2 is not distinguishable (see Fig. 2-1).

The qualitative implications of the Arrhenius equation deserve the consideration of all who deal with explosives. Since E for military explosives has a value between 10,000 and 100,000, while R is approximately two, a small percentage change in temperature results in an order of magnitude change in reaction rate. The sharply defined temperatures that many experimenters have associated with decomposition, ignition, or explosion (see Table 2-1[d]) are quite readily explained in terms of these equations and the relatively limited range of rates that may be measured by most experimental techniques. (The ignition temperatures shown in the table are computed; the explosion temperatures are experimental.)

The Arrhenius equation expresses a characteristic (temperature) of explosives which has, perhaps, a greater influence upon the initiation process than any other attribute. For example, the reaction rate of a typical explosive with an activation energy of 50,000 calories per gram mole, at 800°C is more than ten times its reaction rate at 700°C.

The experimental determination of the constants of **Eqs.** 2-1 and 2-2 for various explosives is complicated by the effects of reaction products, phase changes and multiple reactions, as well as by the heat transfer considerations. The reactions of most of the

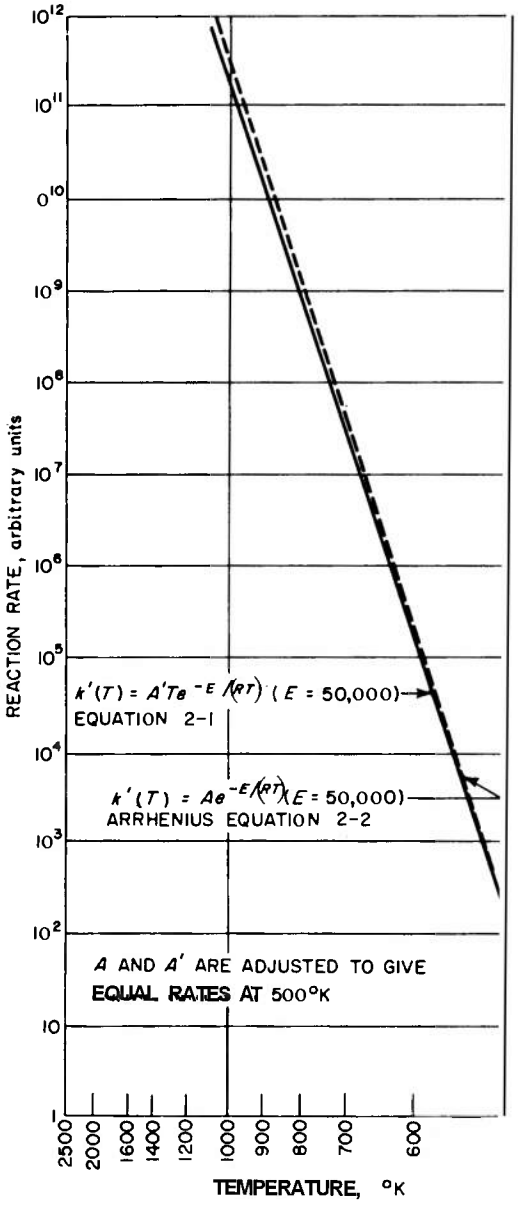

Figure 2-1. Computed Explosive Reaction Rates

commonly used explosives are either accelerated (autocatalysis) or retarded (autostabilization) by the presence of their reaction products[3]. Because of these difficulties, generally accepted reaction kinetics constants for explosives are not available. However, the exponential form of the Arrhenius equation fits most experimental data so well that many investigators have ignored the complicating influences and derived more or less empirical Arrhenius constants from plots of the logarithm of the rate, or of a rate-dependent quantity, as a function of the reciprocal temperature.

For the explosive charge designer, the most useful consequences of theoretical studies of thermal decomposition problems are the development of (1) a more valid basis for qualitative thinking, and (2) coordinate systems within which most experimental data form recognizable patterns. When confronted with an explosive charge design problem, a suggested approach to a realistic solution consists of the following two steps:

1. Obtain, either from available literature or specifically designed tests, experimental data for situations that simulate as closely as possible those to be encountered in service.

2. Interpolate between data points using coordinates of inverse temperature, and logarithms of times, rates, or dimensions. These coordinates may also be used for extrapolation. However, extreme care should be exercised when extrapolating because abrupt changes in the decomposition rate (such as those due to melting of a component of an explosive material) may occur outside of the range of experimental data.

2-1.3 THE "HOT SPOT" THEORY OF INITIATION

The view that nonuniformity of heat distribution is essential to the usual initiation process has been called the "hot spot" theory of initiation. In explosive initiators, the energy available is concentrated by the use of small diameter firing pin points and, in electrical devices by dissipating the energy in short and highly constricted paths. The addition of grit to primer mixes serves a similar function. Not only is nonuniformity of energy distribution essential to most initiation processes, but it is an important factor in

TABLE 2-1

IGNITION AND EXPLOSION TEMPERATURES

Explosive	• Thermal Ignition Temperature[1], °C	t Explosion Temperature[9], °C 0.1 sec	1 sec	5 sec		10 sec
beta-HMX	–	380	–	327	Decomposes	306
Composition B	–	526	368	278	Decomposes	255
Cyclonite (RDX)	–	405	316	260	Decomposes	240
Haleite (EDNA)	–	265	216	189	Decomposes	178
Lead Azide	335	396	356	340	Explodes	>335
Lead Styphnate	250	–	–	282	Explodes	276
Nitroglycerin (Liquid)	200	–	–	222	Explodes	–
Pentolite, 50/50	–	290	266	220	Decomposes	240
PETN (Pentaerythritol Tetranitrate)	215	272	244	225	Decomposes	211
Silver Azide	–	310	–	290	Explodes	–
Tetracene	160	–	–	160	–	–
Tetryl	–	340	314	257	Ignites	238
TNT (Trinitrotoluene)	–	570	520	475	Decomposes	465

*Computed
tExperimental

the growth and propagation of practically all chemical explosive reactions used in ordnance.

Because of the exponential nature of the Arrhenius equation (Eq. 2-2), the reaction rate inevitably reaches a level such that heat is liberated faster than it can be lost. From this point on, the reaction is self-accelerating and quite rapidly becomes explosive.

Although a general equation that includes consideration of all of the complicating factors would be completely intractable, the use of simplified models makes possible solutions which contribute to the understanding of the initiation process. However, simplifications must be used cautiously. For example, it frequently appears that each explosive has a critical initiation temperature that is independent of dimensions. Although more extensive experiments or more detailed analyses have usually shown it to be an approximation that applies to only a specific class of initiator, this relationship can be a useful design tool if its limitations are kept in mind. Perhaps the most important implication of the foregoing is that, since in any type of system, the critical temperature varies so little with dimensional changes and since the volumetric specific heats of solids vary only slightly from one to another, the minimum energy required to initiate an explosive device is nearly proportional to the volume of material that is heated by the input energy pulse. It must be stressed that this is an approximation that should be applied only to comparisons of performance within initiators of the same type initiated in a specific manner.

Since the energy available for the initiation of military explosives is usually limited, initiation systems are designed to concentrate this energy, as heat, in a relatively small volume. Obviously it won't stay that way. The smaller the volume in which a quantity of heat is concentrated, the faster it is dispersed, other factors remaining similar. In order to concentrate a given amount of heat in a nucleus of a given volume, the heating must take place in a time which is short compared with the cooling time of the nucleus. If the rate at which energy is introduced, i.e., the input power, is reduced to a low enough level, the losses will establish equilibrium with the sum of the input power and the heat generated by the reaction. An infinite quantity of energy

will not cause initiation under such equilibrium conditions.

Up to this point, the present discussion has been concerned with the establishment of reaction nuclei. Once reaction is established at a nucleus, the useful functioning of an initiator requires that the reaction be propagated to the remainder of the explosive charge of the initiator and thence to the next component of the explosive system. Similarly, the consequences of accidental initiation depend upon such propagation. The same heat transfer mechanisms whereby heat is dissipated from a prospective reaction nucleus are necessary for the propagation of the reaction from an established nucleus. However, conditions that promote sensitivity to one or another stimulus will sometimes cause failure of propagation if carried to extremes. Heat may be transmitted by conduction, convection, radiation, and what might be called thermodynamic heat transfer. All of these mechanisms are involved in the reaction of explosives, but their relative importance varies greatly and changes as the reaction progresses.

The process referred to as thermodynamic heat transfer is one of the most important mechanisms involved in explosive reactions. The cooling of reaction products, due to abiabatic expansion can, under some circumstances, quench a reaction. Conversely, unreacted explosives can be heated by compression to reaction-inducing temperatures. When the compression is of sufficient magnitude and suddenness to cause a significant increase in temperature, it is generally propagated through the material as a shock wave. Detonation, the ultimate goal of high explosive systems, is a type of reaction propagation which depends upon this mechanism to transfer the heat of reaction to the unreacted explosive.

2-1.4 DEFLAGRATION

The very rapid burning of which explosives are capable (by virtue of containing all of the elements needed for the completion of their reaction) is known as deflagration. Deflagration is distinguished from detonation by its subsonic propagation rate, from which it may be implied that shock waves are not important factors in the propagation. Deflagration of a gas may be described quantitatively in terms of thermodynamics and hydrodynamics. That of solid explosives is more complex and, for real situations, is subject to only qualitative description. Empirical relationships, which are quite reasonable consequences of the mechanisms indicated in the qualitative description, are sufficiently useful for predicting the course of this type of reaction.

The reaction products of most solid explosives are largely gaseous. Most of the important aspects of the behavior of these materials are related to this phase change at the time of reaction. The surface burning rate is determined by the rate at which heat is transferred from the hot, gaseous reaction products to the unreacted solid explosive material. (The local reaction rate is quite probably related to temperature by the Arrhenius equation, but the very steep temperature gradient is reflected in a much steeper reaction-rate gradient, so that the reaction zone is almost vanishingly thin.) The rate at which heat is transferred between a gas and a solid is the product of the difference between their temperatures and a surface coefficient. The surface coefficient is a function of the flow conditions in the gas and its thermodynamic properties, and is directly proportional to pressure. When a solid explosive burns, temperature increase, flow conditions, and thermodynamic properties of its reaction products are nearly constant. Thus, the rate at which heat is transferred from the products to the explosive and, consequently, the surface burning rate should be directly proportional to the pressure. For some materials it is, but for most the situation is somewhat more complex.

The reaction of many, perhaps most, explosive compounds takes place in the gaseous phase. The rate of surface burning in such

TABLE 2-2

VALUES OF THE CONSTANT G IN EQ. 2-3

Explosive	G x 103
Ammonium Picrate	6.25
Tetryl	8.7
TNT	12.5
PETN	21
RDX	36

cases is essentially the rate at which the surface erodes due to sublimation. This in turn is proportional to the rate of heat transfer divided by the heat of sublimation. Since the heat of sublimation of the solid usually increases with increasing ambient pressure, the increase of the surface burning rate with increasing pressure is somewhat less than linear. A relationship between burning rate and pressure which has been found to apply to the surface burning of a number of solid explosives and propellants is

$$R = GP^n, \text{ ft/sec} \qquad (2\text{-}3)$$

where

R = burning rate, ft/sec

G = empirical constant

P = pressure, lb/in.^{2}

n = polytropic constant, dimensionless

The exponent n is less than one. Surface irregularities may increase the burning rate by increasing the surface area and by introducing a component of flow parallel to the surface, thus increasing the surface coefficient of heat transfer. Table 2-2[4] lists constants for Eq. 2-3 for various common military explosives.

The pressure dependence of the rate of surface burning, and the fact that gas is evolved at a rate proportional to the surface burning rate, result in a situation where the confinement afforded by the case of an explosive charge is the most important factor in determining the course of the reaction. In a completely enclosed case, pressure continues to build up and burning rate continues to increase until the case bursts or the explosive is expended. The explosion that results is entirely due to the sudden release of gases when the case bursts. If the case has a leak, orifice, or nozzle, conditions of equilibrium are possible in which the rate at which gases are evolved equals that at which they flow from the container.

For rockets, in which stability of this kind is extremely important, the effort is made to develop propellants for which the exponent n of Eq. 2-3 is as low as possible. In explosive components, the instability that results from the high values of n associated with porous explosives is an important factor in the rapid acceleration of reaction propagation, a part of the function of such elements.

2-2 DETONATION

2-2.1 TRANSITION FROM DEFLAGRATION TO DETONATION

2-2.1.1 TRANSITION PROCESS

The transition from deflagration to detonation is generally divided into three stages (1) deflagration, (2) low order detonation, and (3) high order detonation. The transition from one to the other of these stages is usually quite sudden and is influenced greatly by three factors, particle size of the material, porosity, and confinement provided by the environment.

The process of transition from the first stage can be described on the basis of the following concepts: The deflagration reaction rate accelerates rapidly if the particle size is of the right magnitude. When confined, this increased reaction rate results in increased pressure that propagates as a shock wave in the unreacted explosive. As the shock wave becomes of increasing strength, shock heating will cause a fast enough reaction to sustain the shock which then propagates as a low

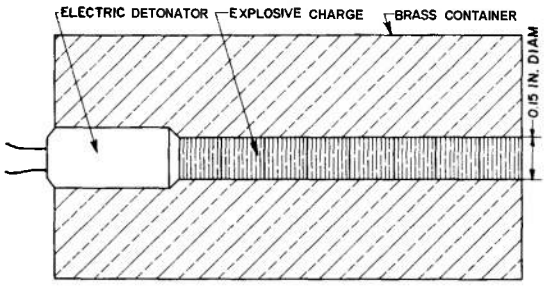

Figure 2-2. Arrangement Used in Observations of Detonation Growth

order detonation. This low order detonation then propagates as a shock wave which, if reinforced by sufficient energy, will accelerate to produce a high order detonation (see also Ref. k).

Particle size influences the acceleration rate of the reaction as does particle porosity because of their effect on the surface area that is exposed to the hot gaseous reaction. Experimentation has shown that for each particle size there is a critical pressure at which the increase in burning rate with increasing pressure is faster than linear[5]. This critical pressure is inversely related to particle size.

2-2.1.2 GROWTH OF DETONATION IN PRIMARY HIGH EXPLOSIVES

In a series of experiments using the arrangement shown in Fig. 2-2[6], containers were sectioned after firing and the expansion of the bore was taken as a measure of the vigor of detonation. The arrangement was also used to measure propagation velocities. Lead styphnate and lead azide were tested.

2-2.1.2.1 LEAD STYPHNATE

The growth of reaction in lead styphnate was very gradual in all instances. It grew fastest (as indicated by the taper of the bore) in material pressed at 4000 to 5000 psi. Under these conditions, the maximum measured propagation rate for the second inch of column was about 2000 m/sec, which may be compared with the stable rate of over 4000 m/sec for these loading conditions. The growth is apparently continuous, though slow and, in a few experiments, approached its maximum rate in several inches. Because of its low rate growth to detonation, lead styphnate is not used as a detonating charge, but to increase the sensitivity of the initial charge, where its reproducible ignitibility is an advantage.

2-2.1.2.2 LEAD AZIDE

It is true that the growth of detonation in lead azide is so much more rapid, even when loaded at very high pressures, ,that experiments in which detonation growth and "dead pressing" can be observed in most other explosives would lead to this conclusion. However, these properties of lead azide, combined with the ever rising pressures for ruggedization and miniaturization, have resulted in the evolution of designs for which these assertions must be reexamined.

Dextrinated lead azide made the transition from burning to detonation quite suddenly for all combinations of loading pressure, confinement, and initiation. However, when pressed to densities above *95%* of maximum theoretical (requiring *20,000 – 25,000* psi loading pressure) and mildly initiated, it would detonate at,rates of 1400-1700 m/sec compared with an approximate rate of 3000 m/sec obtained at lower densities.

2-2.1.3 GROWTH OF DETONATION IN SECONDARY HIGH EXPLOSIVES

One of the principal features that distinguishes a secondary explosive from a primary explosive is its much smaller propensity for completing the transition from burning to detonation. As in primary explosives, this transition is affected by the interaction of a number of factors including charge size, state of aggregation, confinement, and vigor of initiation. However, for any given combination, the transition is much slower and many charges, even main bursting

TABLE 2-3

OPTIMUM LOADING DENSITIES AND PARTICLE SIZES FOR GROWTH OF DETONATION IN RDX, HMX, AND PETN

Explosive	Optimum Loading Density: Granulation	Optimum Loading Density: Density, g/cc	Optimum Particle Size: Micron Range	Optimum Particle Size: Approx. USS sieve cut	Burning Length, cm
RDX	Unsieved	1.29	251-124	60-120	1.2
HMX (first sample)	250-135 micron	1.26	251-124	60-120	1.9
HMX (second sample)	(Not Determined)	–	76- 53	200-270	1.4
PETN	420 micron	1.59	124- 76	120-200	0.2

charges, are so small as to be consumed by low order detonation before the transition can take place. Such main charges are, of course, much safer to handle and use than those in which the transition will take place. In addition to the assessment of hazards of main charge detonation after accidental ignition, the growth of detonation in secondary high explosives has been investigated by those who are interested in the development of safer detonators. The latter have made significant contributions in the determination of optimum conditions for the most rapid growth of detonation in some of the more sensitive secondary high explosives.

Experiments similar to that illustrated in Fig. 2-2 have been carried out with columns of PETN, RDX and HMX. A refinement was the use of coaxial ionization probes that could be fed in through small radial holes at fairly frequent intervals along the length without unduly affecting the confinement. Velocity measurements obtained with these probes, and oscilloscopes and timers established the correlation between bore deformation and propagation velocity. The lengths of columns required to grow to detonation, referred to as burning lengths, were determined for a number of combinations of particle size and loading density. Hardly design data, these lengths may be taken as indications of development goals. For each explosive, optimum values were indicated for each of these variables at which the burning length reached a minimum value (see Table 2-3[7]).

In other experiments it has been established that the growth of detonation in a column of secondary explosive is accelerated by the insertion of a barrier followed by an air gap[8] (see also par. 3-2.2.5). It might be expected that the explosive material, particle size, loading density, dimensions and confinement on both sides of the barrier-gap combination interact with the material and thickness of the barrier and the dimensions of the gap to determine the burning distance. A factorial experiment to determine the optimum combination would be a formidable program.

Growth of detonation has been observed in a number of cast explosives[g]. In Pentolite and **DINA** (diethylnitramine dinitrate), high order detonation was established in 10 to 15 cm. In Composition B, the propagation rate grew to about 3000 m/sec, at which point the container apparently shattered, relieving the pressure and allowing the reaction to decay. In TNT, the reaction grew so little in 12-in. columns that the containers were practically undamaged, and the propagation rates so low, 600 to 1000 m/sec, that it was difficult to obtain satisfactory records. By increasing the length to 34.5 in. and finally to 58.5 in., it was possible to observe the growth of the propagation velocity to about 2000 m/sec. The increase was quite regular but seemed to be accelerating toward the end. The question as to whether the reaction would continue to accelerate, stabilize at a low order detonation, or burst the tube and die out has not yet been answered.

2-2.2 SHOCK WAVES

Detonation is a mode of propagation of reaction in which the energy that initiates the reaction is transmitted to the unreacted material in the form of a shock wave. It has been referred to as a reactive shock. The discussion that follows of nonreactive shocks serves as a preface to that of detonation.

Shock waves, like acoustic waves, are a special class of compression-displacement waves. Although the behavior of such waves varies with their amplitude, their wave form, and the properties of the media in which they propagate, many relationships that derive from fundamental physical laws are the same for practically all cases. Although the typical wave attenuates as it propagates, this attenuation is so slow compared with the associated transitions that the wave may be assumed to be stable when examining its detailed structure. It is convenient, at the beginning, to assume an infinite plane wave in which only movements and changes along the axis of propagation are significant.

Consider, now, a wave propagating through a stationary medium. In a system moving with the wave, the conservation of matter demands that the mass of material passing through each plane perpendicular to the axis be equal to that passing through each other such plane. In other words, the product of density and velocity is a constant at all points along the axis. In this system of coordinates, the undisturbed medium approaches the wave front at a velocity equal in magnitude to that at which the wave propagates in the stationary medium. The velocity of the material relative to the wave front is, of course, equal to the difference between the propagation velocity and the velocity of the material at any point relative to the undisturbed medium. Thus, the equation of continuity has the form

$$\rho_o D = \rho v = \rho (D - u) \qquad (2\text{-}4)$$

The impulse applied is

$$(P - P_o)dt = u\,dm = \rho_o u dx \qquad (2\text{-}5)$$

and

$$P - P_o = \rho_o u dx/dt = \rho_o D u \qquad (2\text{-}6)$$

Eqs. 2-4 and 2-6 may be combined and rearranged to obtain

$$D = [\rho \Delta P/(\rho_o \Delta \rho)]^{1/2} \qquad (2\text{-}7)$$

where

D = detonation velocity

v = velocity of material relative to the wave front

u = velocity of material relative to the undisturbed medium

m = mass

P = pressure

t = time

x = distance traveled by shock wave in undisturbed medium

ρ = density

subscript o refers to the condition in the undisturbed medium

Refer to the paragraph that follows for a discussion of units.

In using Eqs. 2-4 to 2-7 in the estimation of shock conditions, two convenient systems of units may be derived from the CGS system. The use of gram as a unit of mass and cm as a unit of length results in densities in g/cm^3. These densities are numerically equal to the specific gravities of the materials that are given in most handbooks. The use of the second as the unit of time and the dyne as the unit of force results, for the usual shock or detonation calculations, in velocities (cm/sec) and pressures (dyne/cm^2) expressed in numbers so large as to elude intuitive grasp. Pressures expressed in bars (10^6 dyne/cm^2)

and times in milliseconds can be combined with masses in grams and distances in centimeters in which these equations may be used without numerical coefficients. The system of gram, centimeter, microsecond, and megabar is also compatible and may be even more convenient.

Eqs. 2-4 to 2-7 apply quite generally to all pressure-displacement waves for which the assumption of equilibrium is valid. The relationship among pressure, volume, and temperature is known as the equation of state of a material.

Acoustic waves are those' of such small amplitude that the volume change is negligible and $\Delta P/\Delta\rho$ is more accurately expressed as $dP/d\rho$. Thus, the sound velocity c_o is expressed as

$$c_o = \sqrt{dP/d\rho} \tag{2-8}$$

By combining Eq. 2-8 with the ideal gas laws, the familiar equation for the velocity of sound in an ideal gas is found

$$c_o = \sqrt{\gamma RT} \tag{2-9}$$

For elastic solids and liquids the expression becomes

$$c_o = \sqrt{E/\rho} \tag{2-10}$$

where

c_o = sound velocity

γ = ratio of the specific heat at constant pressure to that at constant volume, dimensionless

R = universal gas constant

E = elastic modulus appropriate to the material and mode of propagation

Refer to previous discussion for units.

Waves of .finite amplitude (those in which the compression of the medium is sufficient to result in a significant change in the compressibility, i.e., $dP/d\rho$ changes significantly) may, if the pressure rise is continuous in time and space, be considered a succession of sound waves each moving in the medium compressed by its predecessor. The sound velocity may change as the medium is compressed, causing a distortion of the wave as it progresses. For example, in a gas, the temperature rise with compression causes the higher amplitude portion of the wave to propagate faster, outrunning the other portions until it reaches the front (see Fig. 2-3). The discontinuity of pressure density, particle velocity, and temperature which results is known as a shock. The equations of state of solids are more complex so that the modification of wave forms at pressures beyond their elastic limits varies from one material to another. Shock waves of certain amplitudes degenerate in some solids. When compressed sufficiently, however, all matter becomes less compressible so that compression waves, if they are of sufficient amplitude, will develop into shock waves in any medium.

A curve, commonly known as the Hugoniot curve, may be used with Eqs. 2-4 to 2-7 to define the conditions behind the shock wave". The Hugoniot curve is the locus of end points of shock compressions. The propagation velocity should never be computed from the slope of the Hugoniot curve but always from that of a chord connecting the initial point with the final point using Eq. 2-7. For ideal gases, the equation of the Hugoniot curve is

$$\frac{P}{P_o} = \frac{\rho - \mu^2 \rho_o}{\rho_o - \mu^2 \rho} \tag{2-11}$$

where $\mu^2 = (\gamma - 1)/(\gamma + 1)$.

Since the Hugoniot compression results in a larger temperature rise than does adiabatic compression, the gas becomes less compressible as the strength of the shock increases. It is thus apparent from Eq. 2-7 that the velocity of a shock is a direct function of its strength. For situations where the density is

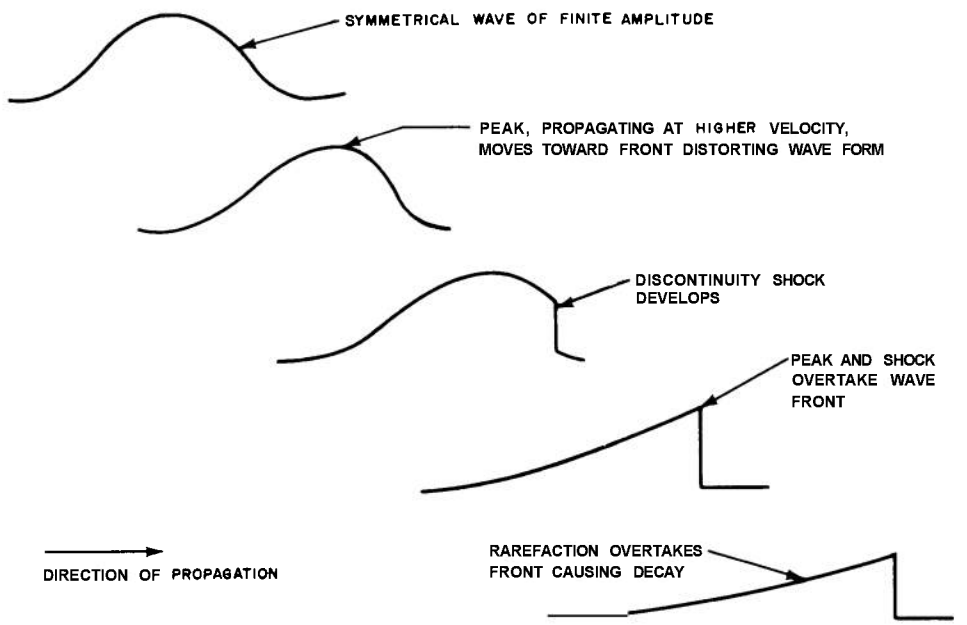

Figure 2-3. Formation and Incipient Decay of Shock Wave from Wave of Finite Amplitude

so close to the limiting value (ρ_o/A) that variations with pressure may be neglected, Eq. 2-6 may be rearranged to give

$$P = \rho_o D^2 (1 - A) \qquad (2\text{-}12)$$

Using Eq. 2-11 and the gas laws, the relationship may be expressed in terms of the Mach number M which is the ratio (D/c_o) of the shock propagation velocity to sound velocity in the undisturbed medium

$$P/P_o = M^2(1 + \mu^2) - \mu^2 \qquad (2\text{-}13)$$

All of the conditions behind the shock may thus be calculated for an ideal gas combinations of Eqs. 2-4, 2-6, and 2-13.

2-2.3 DETONATION WAVES

2-2.3.1 EQUATIONS OF STATE

Military designers have particular interest in the behavior of gases under two special sets of circumstances: (1) atmospheric air subjected to explosive shock, and (2) the reaction products of the detonation of military high explosives under conditions in the detonation head.

The rate of propagation of pressure displacement waves is proportional to the square root of the resistance of the medium of propagation to changes in density. This relationship, as it applies to various types of wave in various media, is expressed in Eqs. 2-7 through 2-10. Eqs. 2-9 and 2-10 for elastic waves are essentially ready to use. The constants for various materials are readily available in general scientific and engineering handbooks[k].

As the amplitudes of the waves increase and their forms change, the relationship becomes more complex. For shock conditions, the irreversible heating of the Hugoniot compression, Eq. 2-11, describes relationship between pressure and density.

With the further increase in amplitude usually associated with the detonation of solid explosives, other factors add their in-

fluence to that of the Hugoniot heating to modify the pressure-density relationship further. These factors involve inter- and intra-molecular and atomic forces that derive from relatively simple electrostatic and quantum mechanical principles. However, they acquire a considerable degree of complexity by the time they have been combined to obtain the attraction and repulsion functions for a single species of atom. Hence, calculation of the behavior of strong shocks and the detonation of solid explosives is carried out using one or another of several empirical relationships.

Precise calculations of the thermodynamic behavior of atmospheric air under strong shock conditions have been made and presented in tabular form [12].

For higher densities, the volume occupied by the molecules (or, more accurately, that in which the electrostatic repulsive forces are significant) is an appreciable fraction of the total volume available. If the molecules are assumed to be incompressible solids, the ideal gas equation of state

$$PV = RT \tag{2-14}$$

becomes

$$P(V - \alpha) = RT \tag{2-15}$$

where

P = pressure

V = volume

R = universal gas constant

T = absolute temperature

α = covolume of the gas, the volume occupied by the molecules

The dimensions will depend on the system of units employed.

The equations of state which have been applied to the computation of detonation conditions in solid explosives are variants of Eq. 2-15 in which account is taken of the compressibility of molecules and, in some cases, of their thermal expansion[3]. However, none of the equations proposed are adapted to simple, direct calculation.

For the early stages of expansion, which are of interest in connection with most military applications, the pressure-volume relationship

$$PV^n = K \tag{2-16}$$

where n and K are constants, is as accurate an approximation as any. The exact value of n depends upon composition and loading 'density of the explosive. For high performance military explosives, the average value of n is close to three.

2-2.3.2 CHAPMAN-JOUGUET CONDITIONS FOR IDEAL DETONATION

The thermohydrodynamic theory of Chapman and Jouguet is concerned with the transition, insofar as it affects the propagation of detonation (the Chapman-Jouguet point), between conditions in the unreacted explosive and those at the completion of the reaction.

Of the various conditions associated with the detonation of an explosive, the rate of propagation D is the most easily measured. Many precise experimental data are available relating detonation velocity to density. In general, for military explosives, the relationship is quite accurately represented by the equation

$$D = F + G\rho_o, \text{ cm}/\mu\text{sec} \tag{2-17}$$

where F and G are constants characteristic of the explosive. Table 2-4[3] lists the constants of Eq. 2-17 for a number of common military explosives.

Data of this sort, relating detonation velocity to density, have been used to determine equation-of-state constants for the reaction

TABLE 2-4

DETONATION VELOCITY CONSTANTS FOR EQ. 2-17

Explosive	F, cm/μsec	G, $cm^4/\mu sec$
Amatol, 50/50	0.095	0.415
Cyclonite (RDX)	0.249	–
Explosive D (Ammonium Picrate)	0.155	0.344
Haleite (EDNA)	0.203	0.328
Lead Azide	0.286	0.056
Nitroguanidine	0.144	0.402
Pentolite, 50/50	0.238	0.310
PETN (Pentaerythritol Tetranitrate)	0.160	0.395
Picric Acid	0.221	0.305
Tetryl	0.237	0.325
Tetrytol, 65/35	0.186	0.340
TNT (Trinitrotoluene)	0.178	0.323

products of detonation reactions. These constants, in turn, have been used with appropriate equations of state in the computation of the Chapman-Jouguet conditions for many explosives. More recently, techniques have been developed whereby the movements of metal plates in contact with explosive charges can be measured precisely and reduced to pressure-time data for detonation. In Table 2-5[13] calculated values of parameters of the Chapman-Jouguet condition are given for various explosives. Experimental data, where available, are included for comparison. For organic high explosive compounds, the particle velocity is nearly one-fourth of the detonation velocity. Thus Eq. 2-6 becomes approximately

$$P = \rho_o D^2/4 \qquad (2\text{-}18)$$

Note that in Table 2-5 the pressures computed empirically using Eq. 2-18 agree with measured values nearly as well as those using the more rigorous theory, certainly well enough for most design purposes.

2-2.3.3 ACTUAL DETONATION

The previous discussion of detonation has been concerned with a one-dimensional model. In such a model, the conservation laws assume the simple forms of Eqs. 2-4, 2-6, and 2-7. Combined with data regarding the energy of reaction and equation of state, these laws completely define the conditions of detonation in this one-dimensional model, which is also described as an infinite plane wave and as an ideal detonation. Real charges, of course, have three finite dimensions. It might be questioned whether consideration of the infinite plane wave has practical significance. In fact, ideal detonation is closely approximated when the dimensions of a charge and the radius of curvature of the detonation front are large when compared with the reaction zone length (a situation which is not unusual inasmuch as reaction zone lengths of many explosives have been estimated to be of the order of millimeters or even less). Nearly ideal and definitely nonideal detonation are both quite common in military performance.

Detonation may be termed nonideal when the radial flow of energy and material is sufficient to affect significantly the conditions at the Chapman-Jouguet point. As a result of the interdependence of these conditions with the velocity of propagation, such effects are manifest in velocity variations. Either convergent or divergent flow results in nonideal detonation. Convergent detonation is rare except in cases where it is induced by specialized designs. Divergence, however, occurs at most interfaces with inert materials. The most common shape of charges used for experimental observations of detonation is a long cylinder. In such charges, the effects of radial losses of energy and material become apparent as the diameter is reduced. For this reason such effects have come to be known as diameter effects. Observable diameter effects include reduction of the detonation velocity and failure of detonation.

A rigorous quantitative theory that takes into account all of the complicating factors would be quite useless. It would be too cumbersome for a reasonable computer program even if sufficient experimental data were available to establish values for the many physical constants and properties involved.

Many theories and models have been based

TABLE 2-5

DETONATION CONDITIONS, CALCULATED AND MEASURED

Explosive	Loading Density ρ_o, g/cm^3	Detonation Velocity D, cm/μsec Calculated	Detonation Velocity D, cm/μsec Measured	C-J Pressure P, megabar Calculated	C-J Pressure P, megabar Measured	Particle Velocity, cm/μsec Calculated	Particle Velocity, cm/μsec Measured
Composition B	1.712		0.802	0.275"	0.293	–	–
Cyclonite (RDX)	1.762	–	0.862	0.327*	0.325	–	
Cyclonite (RDX)	1.80	0.875	–	0.349	0.348	0.224	0.216
Cyclotol, 76/25	1.743	–	0.825	0.297"	0.313	–	
Cyclotol, 78/22	1.755	0.829	–	0.311	0.213	0.213	0.218
TNT	1.64	0.695	0.695	0.2066	0.177	0.178	0.155
TNT	1.58	–	0.688	0.190"	0.177	–	0.163
TNT	0.624	–	0.380	0.026	–	0.11	–

*From Eq. 2-18.

on a group of assumptions regarding the controlling mechanisms and processes [13-15]. Each of the theories is an attempt to derive a quantitative description of actual detonation from a consideration of a manageable number of the aspects of the process. Still, the solutions remain complex.

Even though a general theory is lacking, it is possible to make qualitative predictions of the behavior of actual detonations on the basis of the following generalities:

1. Other factors remaining constant, charges of small cross section detonate at lower velocities than those of larger cross section.

2. The formula

$$D/D_i = 1 - K/r \qquad (2\text{-}19)$$

where

D = detonation velocity

D_i = ideal detonation velocity

r = radius of charge

may be used to interpolate or extrapolate detonation velocity data in the range where D/D_i = 0.95 or more.

3. If the diameter of a charge is too small, detonation will fail to propagate. Failure diameters for common explosives are listed in Tables 10-2 and 10-3.

4. The properties of surrounding media can substantially alter diameter effects. For example, failure of detonation in TNT has been observed at diameters of the order of 0.5 in. for bare charges[14] while detonation at nearly ideal velocity has been observed for charges one-tenth this size when confined in steel or brass[15]. As might be expected from Eq. 2-6, the shock impedance $\rho_o Du$ is a good criterion for the effectiveness of the confining medium. The best confining medium is a mismatch with the explosive so as to reflect the maximum energy back to the detonation products.

5. Velocities of nonideal detonations are affected by particle size of the explosive. Critical diameters and detonation velocity losses are reduced for fine particle sizes. For some materials in certain ranges, it appears that the ratio of charge dimension to average particle dimension is more significant than either absolute dimension. In cast explosives, techniques conducive to fine crystallization reduce diameter effects.

6. Particle size distribution is also a factor in diameter effects. Detonation velocities are

higher and failure diameters smaller for uniform particle sizes than for mixtures of particle sizes.

7. The velocity of propagation of actual detonation is determined by Chapman-Jouguet conditions at the center of the charge. Thus, it is possible, under some circumstances, for a portion of the explosive charge to detonate at near ideal velocity yet for surrounding material in the outer streamlines to react only partially.

8. Nonideal detonation does not necessarily imply incomplete reaction. Many valuable military items include explosive charges that detonate at very low velocities compared with the ideal velocity for the explosives used.

9. The relationship between density and nonideal detonation is complex. Observable phenomena can be explained and predicted on the basis that, with increasing porosity, the decreasing homogeneity of density is reflected in decreasing homogeneity of temperature distribution and consequently increasing initial reaction rate, while the decrease in pressure results in slower propagation of the grain burning reaction and consequently longer reaction zones. Thus, increasing porosity results in greater diameter effects upon detonation velocity but sometimes in smaller failure diameters, particularly under intermediate conditions of confinement.

2-3 INITIATION

2-3.1 ESTABLISHING A SELF-PROPAGATING REACTION

The rate at which the energy of an externally applied stimulus is transformed into heat and the degree of concentration of that heat in the explosive are as important in determining the magnitude of the stimulus necessary to initiate a reaction as are the chemical and thermal properties of the explosive. These latter factors are determined by the interaction of various physical properties of the explosive with quantities associated with the system or medium whereby the stimulus is transmitted to the explosive. For this reason, even though initiation may be thermal in the last analysis, sensitivity must be considered in terms of the nature of the initiating stimulus as well as its magnitude.

Two limiting threshold conditions for initiating apply to almost every system (1) that in which the energy is delivered in a time so short that the losses are negligible during this time, and (2) that in which the power is just sufficient to eventually cause initiation. In the first condition, the energy required is at its minimum while in the second, the power is at its minimum. These two conditions are represented by the dashed asymptotes in Fig. 2-4. The relation between the energy required for initiation and the rate at which it is applied may be represented by the hyperbolas. In its general terms, the relationship illustrated applies to almost all initiators.

Initiation occurs when the rate at which heat is evolved in a reactive nucleus exceeds that at which it is dissipated. The impedance afforded by the surroundings to this dissipation is commonly referred to as confinement. Both experiment and theory demonstrate the dominant role played by confinement in the initiation, growth, and propagation of explosive reactions, particularly when the dimensions are as small as those of explosive train components.

The properties of a container which contribute most to confinement depend upon which of the several dissipative mechanisms is most important. This, in turn, depends upon which phase of the initiation process is most critical in a system.

In the early, self-heating stage of reaction growth, thermal conduction is the dominant heat transfer' mechanism. In general, the containers of explosive charges are much better conductors than the explosives themselves so that a thin outer layer of explosive is

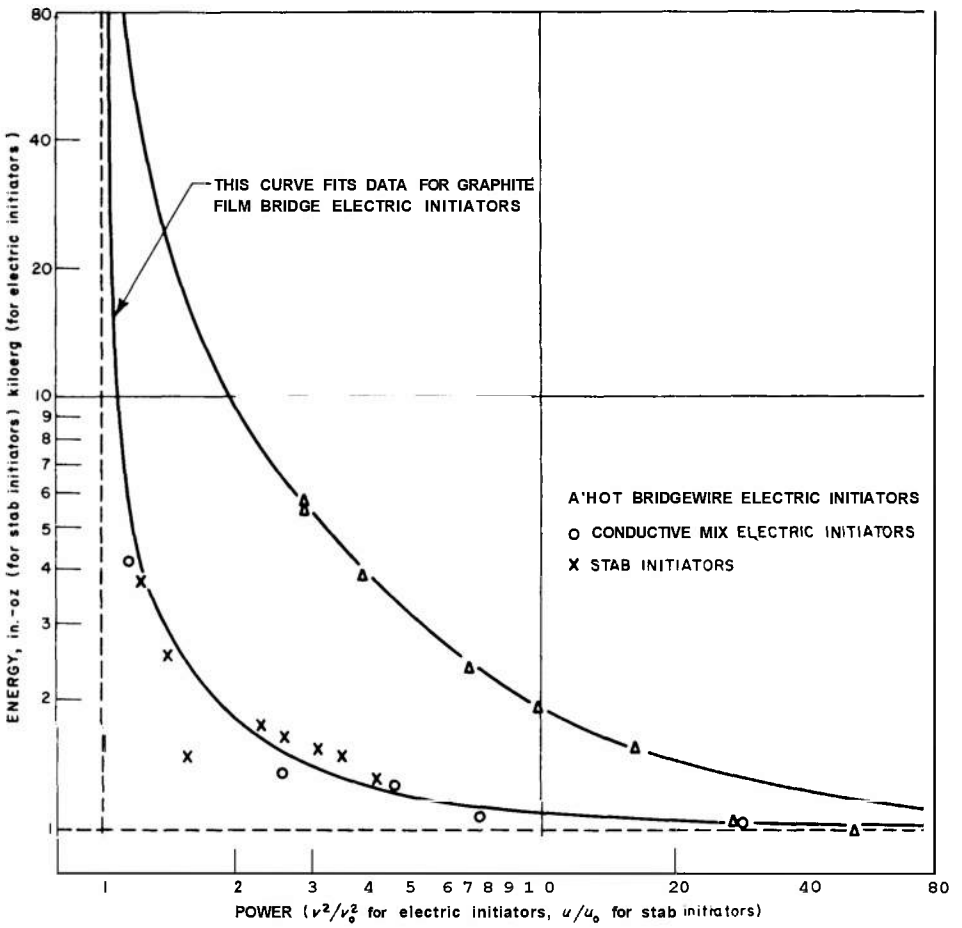

Figure 2-4. Energy-power Relationship for Various Initiators

a better insulation than the container. At this stage, except in rare instances, the properties of the container have negligible effect upon the initiation process.

The pressure of detonation of solid explosives is sufficient to burst or permanently deform any container that can be made. However, the time involved in detonation processes is of the same order of magnitude as the expansion times of the containers. The rate at which the container expands is determined by momentum considerations and is inversely related to the mass of container material which is moved. For a thin-walled container this mass is essentially that of the wall; for a thick-walled container, since only the material which has been reached by the shock wave induced by the detonation is affected, the affected mass is proportional to the density of the material times the shock velocity in the material. This product, known as the *shock acoustic impedance,* is a good measure of the effectiveness of a material as a confining medium for stable detonation[14].

Initiation is complicated by such a variety of factors that the most carefully designed experiments yield data that are difficult to interpret in general terms. Practical situations are usually even more complicated. The questions that arise concerning initiation or explosion are best answered in terms of direct experiments with military materiel under

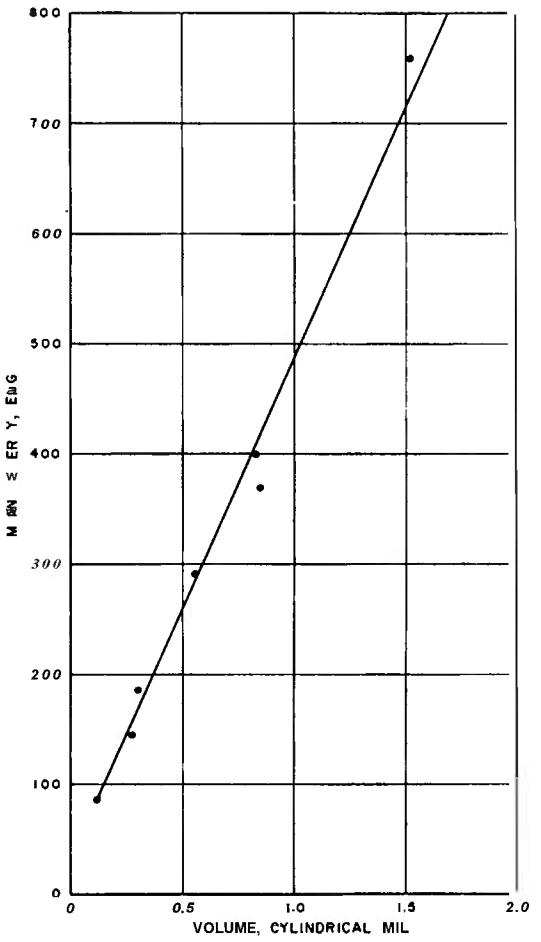

Figure 2-5. Typical Effect of Bridgewire Volume on Input Characteristics

service conditions or experiments with models and conditions that simulate service items and situations as closely as possible. For specific applications to initiator design, see par. 5-2; for testing, par. 12-2.2.

2-3.2 INITIATION BY HEAT

2-3.2.1 HOT WIRE ELECTRIC INITIATORS

Hot bridgewire electric initiators are the simplest and most direct illustrations of initiation by heat. Since a bridgewire can be measured, its volume, heat capacity, and resistance can be calculated. Since it is further possible to generate electrical pulses and currents of accurately known characteristics, these can be combined with the bridgewire characteristics to obtain accurate estimates of power, energy, and temperature.

A large number of experiments have been carried out in which the interrelationships of the variables that affect the operation of bridgewire initiators have been investigated[11,e]. These investigations have verified the following principles:

1. The energy required to fire a hot wire electric initiator is roughly proportional to the volume of the bridgewire, if the energy is delivered in a short enough time (see Fig. 2-5[11]).

2. Closer analysis shows that the threshold temperature increases with reduced wire diameter. This trend is less marked when the explosive has a high activation energy (like lead styphnate).

3. The energy required per unit volume also increases somewhat with decreasing bridgewire length. End losses probably account for this.

4. For a specific initiator design the energy requirement approaches a minimum as voltage, current, or power is increased and increases indefinitely as power is reduced to a minimum.

5. The relationship stated in 4 refers to the average power of a firing pulse. Pulse shape has a secondary effect that is not easily measured.

6. The current requirement varies approximately as the 3/2 power of the wire diameter and inversely as the resistivity of the bridgewire metal.

The behavior of hot wire electric initiators has been described by an equation that agrees well with experimental data

$$C\,dT/dt + \gamma T = I^2 R, \text{ W} \qquad (2\text{-}20)$$

where

C = heat capacity of the thermal mass (including bridgewire and surrounding layer of explosive), W-sec/°C

T = temperature, °C

t = time, sec

γ = cooling rate coefficient, W/°C

I = current, A

R = resistance, ohm

Although the assumption of a constant ignition temperature yields remarkably accurate predictions of the behavior of specific hot wire initiators, it is an approximation. The generality mentioned as 2 is evidence of the limitations of this approximation. Eq. 2-20 and others are based on the assumption of a homogeneous solid charge of explosive. As applied to hot wire initiators, the equations also imply essentially perfect thermal contact between bridgewire and explosive. It has been shown that the separation between the bridgewire and explosive, which results from some combinations of mechanical design, loading procedure, and aging, can be sufficient to cause failure of hot wire initiators.

Another example of a discrepancy between calculations and experiment is worth noting. Based on the usual assumptions, the critical conditions for initiating secondary explosives, such as PETN or RDX, have been computed but attempts to achieve reliable high order detonation in these materials with hot wires have been negative'.

The initiation of explosives by means of electrically heated wires is at present more subject to precise quantitative control and theoretical prediction than any other initiation mechanism used by the military. The broad range of available bridgewire materials and sizes makes it possible to vary the energy sensitivity by a factor of nearly 100 without changing either the explosive materials or the external configuration. At the same time, the process is affected by a wide variety of other variables including electrical circuit parameters, state of aggregation of the explosive, and mechanical design of the initiator. For these reasons, a reasonably complete characterization of the hot wire sensitivity of an explosive would have to be in terms of a series of performance curves. Such data are available for only a few materials. Table 2-6 lists hot wire sensitivities of a number of primary explosives obtained for particular conditions: Extrapolations of these data to other conditions is a reasonable basis for an experimental development program but should not be used to make firm design decisions.

The application of the foregoing to the design of hot bridgewire electric initiators is discussed in par. 5-2.4.2.

2-3.2.2 CONDUCTIVE FILM ELECTRIC INITIATORS

Both metallic and semiconductor films have been used as bridges in electric initiators. The general principles discussed for wire bridges also apply to metallic film bridges. In one system, the large ratio of surface to cross section area of a film is used to greatly increase the steady state power requirement while retaining a desired resistance and energy sensitivity'.

In semiconductive films, the negative resistance coefficients typical of such materials can produce a channeling of the current in a restricted path between the electrodes and therefore can result in extremely localized heating. This effect can be used to produce extremely sensitive initiators when such items are desired.

Semiconductive bridges used by the military are made of graphite. These bridges

TABLE 2-6

SENSITIVITY OF VARIOUS EXPLOSIVES IN WIRE BRIDGE INITIATORS

Explosive	Energy, erg 0.0001-in. diameter	0.00029-in. diameter
DDNP/$KClO_3$, 75/25	260	1050
Lead Azide	340	1340
Basic Lead Styphnate	125	700
LDNR	138	930
Tetracene	115	460

Tungsten wire 0.030 in. long fired at 14-20 V

normally break down forming a very hot, localized arc when their voltage threshold is exceeded. Because of this behavior, it is difficult to design the bridges for specific conditions. However, the sensitivity levels can be determined experimentally with comparative ease.

Present graphite bridge initiators have essentially similar firing characteristics. Their resistance is on the order of 1000 to 10,000 ohms. The design and fabrication of film bridge initiators are discussed in pars. 5-2.4.2 and 5-4.4.

2-3.2.3 CONDUCTIVE EXPLOSIVE MIX ELECTRIC INITIATORS

The usual conductive mix consists of an explosive to which is added a relatively small percentage of conductive powder. Such mixes are loaded so as to contact a pair of electrodes. Current flowing between the electrodes flows from one conductive particle to another through a series of contact points. In general, many such paths form a complex parallel-series network but one such path usually has a lower resistance than others so that the current tends to concentrate. Where the conductor has a negative resistivity coefficient, like carbon, the resistive heating tends to reduce the resistance of the preferred path and further concentrate the current. Even where the conductor is a metal, the tendency for contact resistance to decrease with current flow results in a similar concentration in the preferred path. Along the path, the heat tends to concentrate at the contact points. The degree of concentration, and consequently the relationship between temperature and electrical input, is determined by a statistical interaction of particle size, uniformity of mixture, particle shape, composition, loading density, and electrode configuration and spacing.

The formulation of a logical process for the design of a conductive mix system of specified electrical and firing characteristics is a task of such formidable proportions that it has not been undertaken. However, remarkable results have been attained by enlightened cut-and-try procedures[16]. A mathematical model also has been attempted in the U.K. The design and fabrication of conductive mix initiators is discussed in par. 5-2.4.5.

2-3.2.4 TRANSMISSION OF HOT GAS

The initiation of reactions of solids by means of hot gases depends upon a highly complex heat transfer situation. The heat transfer between a gas and a solid is proportional to pressure and temperature of the gas but is also affected greatly by the movement of the gas relative to the surface and by surface porosity, roughness, and configuration. Since the heat conductivity of the solid is almost invariably much greater than that of the gas, the temperature attained by the surface is much lower than that of the body of the gas unless the duration of exposure is sufficient for the solid to reach the gas temperature. In most situations encountered in military materiel, the total heat capacity of the gas is so much less than that of surrounding solids that the equilibrium temperature approached by the gas-solid system is practically the initial temperature of the solids.

Initiation by hot gases has not been computed but has been measured in a number of experimental apparatus[7]. A shock tube is an interesting tool for the exposure of explosives

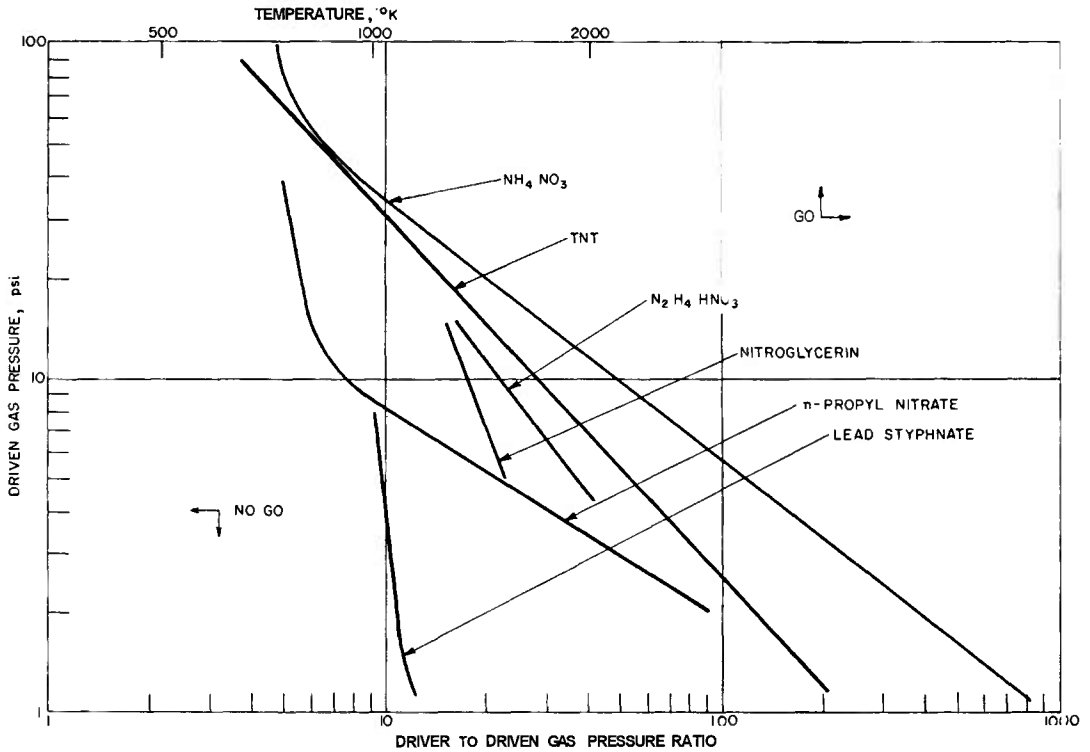

Figure 2-6. Threshold Conditions for Initiation of Various Explosives in a Shock Tube

to high temperature gases. It has the advantage over other devices in that pressure and temperature of the gas in contact with the explosive change virtually instantaneously from initial conditions to those of the reflected shock wave. The shock pressures used in such experiments are too low for the shock waves transmitted into the explosive to be significant factors in initiation. Shock pressure, of course, is an important factor in the heat transfer between the gas and the solid explosive material. Some of the data for threshold conditions of initiation are shown in Fig. 2-6[18]. The effects of variations in the gas composition are apparently quite significant but require further interpretation.

2-3.2.5 TRANSMISSION OF HOT PARTICLES

There is reason to believe that the most effective part of the output of some primers is the spray of hot, high velocity, solid particles or of droplets of liquid which they emit. Quantitative measurements of factors affecting initiation by such means are difficult to make. The process, however, is essentially the same as that of initiation of suddenly heated bridgewires, discussed in par. 2-3.2.1.

2-3.2.6 ADIABATIC COMPRESSION

If a column of air ahead of an initiator could be compressed rapidly enough, its temperature will rise by adiabatic compression. The force of target impact could be used to crush the nose of a simple fuze thus forming an adiabatic compression mechanism. Fig. 2-78 illustrates such a concept. Undoubtedly the crushed hot particles contribute to the initiation process. Adiabatic compression is used only rarely; however, the Australians have a mortar fuze using this principle[9].

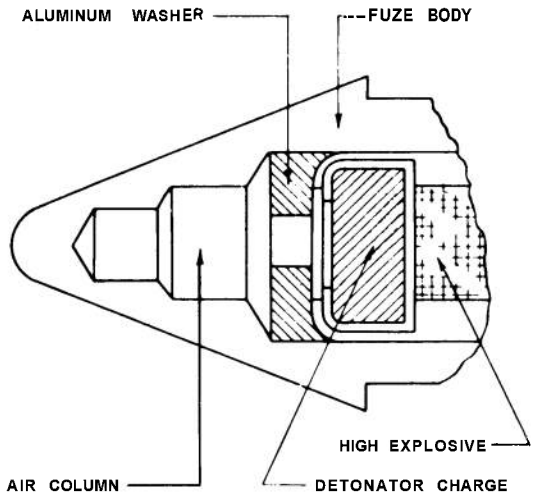

Figure 2-7. Initiation by Adiabatic Compression

2-3.3 INITIATION BY IMPACT

2-3.3.1 IMPACT SENSITIVITY MEASURED WITH LABORATORY MACHINES

Impact initiation of explosives is of interest to designers of military materiel for the assessment and elimination of hazards and for the design of stab and percussion initiators. For the assessment of the relative hazards during handling and use of explosives, several standard impact machines have been devised. Machines and test methods are described in par. 12-2.1.2.1. Essentially, an impact machine consists of an apparatus by means of which a weight can be dropped from various predetermined heights so as to strike an explosive sample. The height from which the explosive is initiated is a measure of impact sensitivity. Impact sensitivity values of common military explosives are shown in Table 4-2.

It long has been agreed that impact initiation is usually thermal'. The explosive is heated locally by compression of interstitial gases, intercrystalline friction, and viscous flow. On this basis it is possible to compute the reaction rates that may be expected in 'an impact machine. The data of one experiment are shown in Fig. 2-8[20]. Here the temperature calculated for explosion in 250 μsec is compared with impact sensitivity.

While impact sensitivity data are used as the basis for establishing safe practices and for selecting explosives that may be used in one or another application, there are two problems. First, it is admitted by most investigators that these tests really do not simulate any situation likely to occur in manufacture or use of military materiel. Secondly, different machines rank the same explosives in different orders. Perhaps part of the problem is that the explosive samples are not prepared in the same manner as cast or pressed explosive components. As a result, many have come to doubt the validity of impact test results as a basis for any binding decisions. Doubtlessly, sound and valid explanations can be found for the inversions in Table 4-2. However, such explanations are not particularly helpful in efforts to employ the impact machines in the selection of explosives.

Still, impact test sensitivities are in widespread use. If a newcomer to the field of explosives wonders what to make of this, he is in the company of experts of long experience. One basis that has been suggested for the assessment of the relative hazards connected with the use of an explosive is comparison by means of a variety of machines. Another is the design of tests more subject to analysis in physical terms. A third approach is the use of tests, such as those described in par. 12-2.1.2, which are designed to simulate specific conditions of service and use.

2-3.3.2 STAB INITIATION

For detonators initiated by stab action, one of the most important functions is that of converting another form of energy into highly concentrated heat. As in electrical devices, the energy necessary is nearly proportional to the amount of material that is heated.

The standard firing pin for stab initiators is a truncated cone (Fig. 2-9). A rather interest-

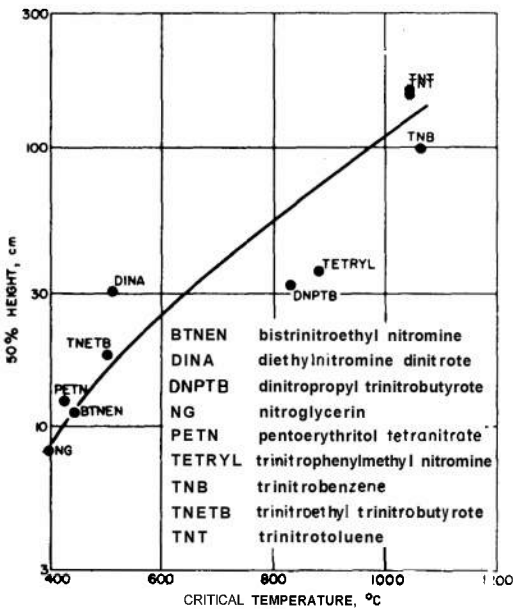

Figure 2-8. Input Sensitivity vs Explosion Temperature .

ing relationship has been found to exist between the sensitivity of the explosive used and the optimum size of the flat on the firing pin. The less sensitive the explosive, the larger the optimum diameter of the flat required. This can be related to the compactness of the affected volume of the explosive. The most compact shape for a cylinder (i.e., the shape having the least surface area for a given volume) is one whose length is equal to its diameter. Thus, as the energy required for initiation is increased, it is advantageous to distribute it over a large enough area to limit the effective length to nearly the diameter. The flat diameter given serves the priming mixes commonly used.

To achieve greater sensitivity, special initiation systems have been employed occasionally. Thus the flat diameter of the pin for the M55 family of detonators is 0.0075 in. Since the firing pin is a critical component of the initiation assembly, the correct firing pin must be tested and used with the particular initiator. Unless otherwise specified, the

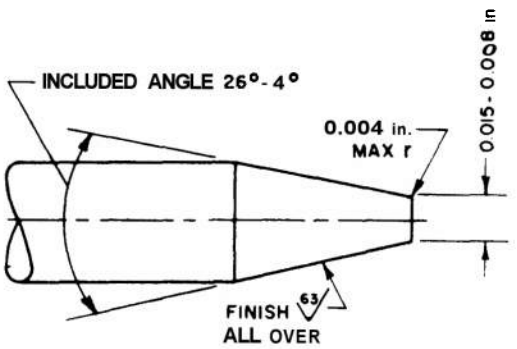

Figure 2-9. Standard Firing Pin for Stab Initiators

standard pin (Fig. 2-9) is used for all stab initiators.

Both steel and aluminum alloys are in common use. Aluminum results in a significant but not serious decrease in sensitivity[a]. Alignment is critical because misalignment will decrease sensitivity.

In general, the higher the density of the explosive, the more sensitive the stab initiator (see Table 2-7[a]). Because the denser explosive offers more resistance to the penetration of the firing pin, the kinetic energy of the moving mass is dissipated over a shorter distance, so that a smaller quantity of explosive is heated to a higher temperature.

Since the resistance of solids to deformation does not change very much with moderate changes of deformation rate, the power dissipation by the displacement of explosive by a firing pin is nearly proportional to its velocity, which, in a drop weight system, is proportional to the square root of the drop height. The energy, on the other hand, is proportional to the product of the height and the weight. This energy-power relationship is shown in Fig. 2-4.

2-3.3.3 PERCUSSION INITIATION

As in stab initiation, the function of the percussion firing pin is to transform energy into highly concentrated heat. However, con-

TABLE 2-7

EFFECT OF LOADING PRESSURE ON INITIATOR SENSITIVITY

Loading Pressure, 1000 psi	Drop Test Height, in.
15	1.31
25	0.91
40	0.77
60	0.68
80	0.57

NOL Priming Mix in MARK 102 Cups, 2 oz ball

trary to initiation by stab, the firing pin does not puncture the case in percussion initiation. Rather, the pin dents the case and pinches the explosive between anvil and case. Energy must be supplied at a rate sufficient to fracture the granular structure of the explosive. Criteria for percussion firing pins have not been refined to the same degree as those for stab pins. It has been established that a hemispherical tip gives greater sensitivity than a truncated cone, and that tip radius has little effect on sensitivity. Typical radius is 0.050 in.

A study on the effect of firing pin alignment showed that there is little effect if the eccentricity is less than 0.02 in. Above 0.04 in. eccentricity, sensitivity decreases rapidly because of primer construction. Sensitivity also decreases as the rigidity of primer mounting is decreased. In general, a study of the relationship of cup, anvil, explosive charge, and firing pin has shown that sensitivity variations appear to depend on the nature of primer cup collapse rather than on explosion phenomena themselves[g].

The effect of firing pin velocity results in the same general hyperbolic energy-velocity relationship as that of other initiators (see Fig. 2-10[a]).

From experimental data it can be inferred that stab and percussion initiations occur by different mechanisms. Kinetic energy appears

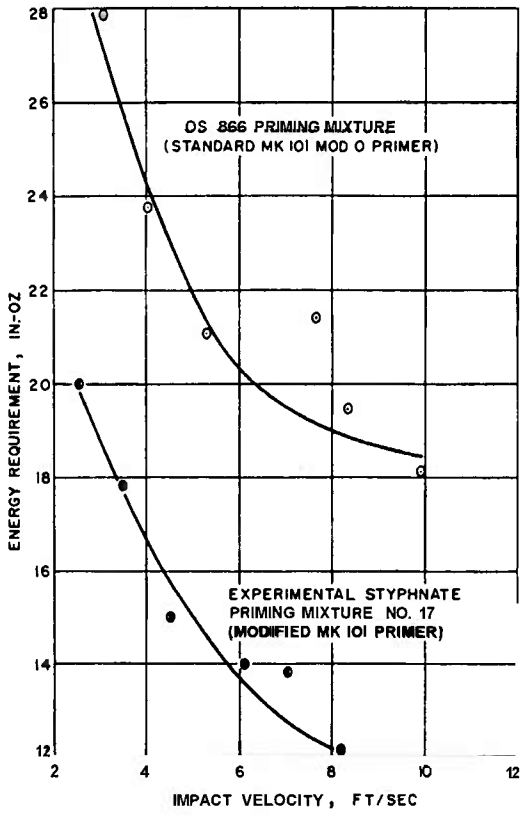

Figure 2-10. Energy-velocity Relationship for Percussion Primers

to be the determining magnitude for stab initiation, momentum for percussion.

2-3.4. INITIATION BY OTHER MEANS

2-3.4.1 FRICTION

The importance of frictional heating in the initiation of explosives has been demonstrated by several investigators'. The importance of this type of initiation with respect to handling hazards is attested by the experience of press loading activities, namely, "press blows" are much more frequent during pellet ejection and ram extraction than during the actual pressing phase. However, no quantitative means of measuring this property is in current use. Perhaps the most pertinent data regarding friction sensitivity are those shown in Table 2-8[2] which relate impact sensitivity to

TABLE 2-8

INITIATION OF EXPLOSION BY FRICTION OF PETN IN THE PRESENCE OF GRIT

Grit added	Hardness, Mohs' scale	Melting point, °C	Friction explosion efficiency, %	Impact explosion efficiency, %
Nil (pure PETN)	1.8	141	0	2
Ammonium nitrate	2-3	169	0	3
Potassium bisulphate	3	210	0	3
Silver nitrate	2-3	212	0	2
Sodium dichromate	2-3	320	0	0
Potassium nitrate	2-3	334	0	0
Potassium dichromate	2-3	398	0	0
Silver bromide	2-3	434	50	6
Lead chloride	2-3	501	60	27
Silver iodide	2-3	550	100	—
Borax	3-4	560	100	30
Bismuthinite	2-2.5	685	100	42
Glass	7	800	100	100
Rock salt	2-2.5	804	50	6
Chalcocite	3-3.5	1100	100	50
Galena	2.5-2.7	1114	100	60
Calcite	3	1339	100	43

melting point and hardness of the intermixed grit.

2-3.4.2 ELECTRIC SPARKS

The initiation of explosives by electric sparks is of interest with respect to hazards of use. An individual may carry a charge of a few hundredths of a joule on his body, which if discharged could initiate explosives'[1]. It has been found that the energy required for initiation is highly dependent upon physical and electrical characteristics of the discharge system and the form of the explosive (see Table 2-9[17]).

The military application consists of "high tension" initiators which are ignited by electric sparks (see par. **5-2.4.4).** A number of experimental detonators are also being studied'[22]. Lead azide can be initiated with as little as 10^{-3} erg at as low as 4 V under specific, critical conditions. The plastic windows in operational shields are quite capable of generating this amount of static electricity'[3]. The sensitivity of common military explosives to static electricity is shown in Table 4-2.

2-3.4.3 EXPLODING WIRES

Exploding bridgewire (EBW) devices are a recent development in explosive materiel. Of course, almost any bridgewire may be made to explode if subjected to a sufficiently rapid and energetic electrical discharge. However, the feature that classifies an item as an EBW device is that it will fire *only* if subjected to such an impulse. Lesser energies or lower rates will burn out the bridge without initiating the explosive. The key feature of exploding bridgewires is that they can initiate secondary explosives directly and hence result in insensitive initiators.

The exploding wire phenomenon as well as that of the initiation of explosives thereby is complex. The rate at which the energy can be delivered is limited by circuit inductance, impedance mismatch between cable and bridgewire, and skin effect in the bridge which raise the effective resistance to several ohms

TABLE 2-9

THRESHOLD IGNITION ENERGIES

	Metal/metal electrodes (no added circuit resistance)		Rubber/metal electrodes (10^5 ohm series resistance)	
Material	Contact sparks, 500 pF	Gaseous sparks, 1000 pF	Minimum energy	Minimum capacity, pF
Lead azide	20	10,000	2250	500
Lead styphnate	60	–	20	5
Lead dinitroresorcinate	–	–	1250	25

Notes: (1) The energy value quoted is the energy (erg) stored on the capacitor; the energy dissipated in the gap is about one-tenth of this.
(2) The gaseous and contact spark regions of sensitiveness are continuous with lead styphnate.

during the initial stage of the discharge. As the discharge continues, the temperature increase in the wire maintains its resistance in this range. The discharge time is thus increased to about 2μsec which is long enough, even at sonic velocity, for a shock envelope to expand to a few hundred times the volume of the wire. Thus, the energy density may be so low that it is surprising that explosion is initiated.

Gleaned from many research studies[4-26], the following practical generalities may serve as a guide to applications of EBW devices:

1. Firing units should consist of special high-rate discharge condensers and of switches with minimum inductance and transient resistance so that the rate of current rise is on the order of 10^9 A/sec. Triggered spark gap switches are most frequently used.

2. Transmission lines should be as short as possible. For more than a few feet of transmission line, special "flat" low impedance cable is desirable. All connections must be firm and of negligible resistance.

3. Bridgewires of pure metals rather than higher resistance alloys are more efficient for EBW purposes. Although silver and copper are satisfactory in the laboratory, platinum and gold have been preferred for military items because of their resistance to corrosion. Diameters between 1.5-2 mils appear to be optimum for initiation of such explosives as PETN.

4. The state of aggregation of the explosive around the bridgewire is quite critical. Loading densities much higher than 1 g/cm^3 greatly increase the energy requirement for initiation. This increase is so great as to make devices loaded at higher densities inoperable for practical purposes. PETN particles must be of a specific crystalline configuration – needle shaped – to achieve the proper pressed density.

5. The reaction initiated by an EBW in secondary explosives appears to be a low order detonation. Time measurements indicate initial velocities that are definitely supersonic yet well below the stable rates for the explosives and loading densities used. The densities and particle sizes used in EBW detonators are such that detonation of PETN grows to its stable rate in a few millimeters. For other material, such as RDX, confinement and other measures to augment this transmission are desirable[7]

2-3.4.4 LASER AND LIGHT

As a concentrated beam of energy, the laser can provide a hot spot and thus initiate explosives. The focusing properties of its monochromatic radiation make it capable of producing high temperatures while intensive shock may be produced by the higher-power Q-switched lasers. The explosive initiation ability of the laser has been demonstrated; however, all other initiation mechanisms are smaller, lighter, cheaper, and much less complex. Hence, lasers have not been used in the initiation of primary explosives.

On the other hand, military technology would welcome the ability to detonate secondary high explosives directly. This ability would eliminate the need for a primer and perhaps also the safing and arming device. In addition, direct reliable initiation of secondary high explosives by means of laser radiation also would be extremely useful in explosive sensitivity tests by permitting the precise measurement of input energy. Present measurement accuracy is limited by the variations of the initiator used to set off the secondary explosive.

An experimental investigation has been carried out to establish the feasibility of initiating secondary high explosives by means of a ruby laser (6943 Å), both in the free running and Q-switched modes[25]. Explosive samples of PETN, tetryl, HMX, and RDX were detonated successfully when compressed against a glass plate. Energy inputs were as low as 0.025 J/mm^2. Design of an explosive train initiation system has not yet been attempted.

Explosives can be initiated also by ordinary but high intensity light from such devices as a flash cube. However, no practical military system exists at present. Efforts also have been conducted on the initiation of silver azide crystals by light. While feasible in the laboratgry, it is not practical[29]. Pyrotechnics also are capable of being initiated by high intensity white light.

2-3.4.5 SPONTANEOUS DETONATION

Analogous to spontaneous combustion, spontaneous detonation is the self-ignition of detonating materials through chemical action (oxidation) of its constituents or through dissipation of trapped electrostatic charges. Most modern explosives are stable and need some form of external stimulus to cause them to initiate. Hence, spontaneous detonation is extremely rare.

However, the spontaneous detonation of lead azide has been observed[30,31]; detonators, relays, and leads – all containinglead azide – have fired. While this functioning tends to occur only once in eighty million items, the huge modern production quantities make this incident rate significant and totally unacceptable. The cause of failure is postulated to be a hot spot created from the build-up of an electric charge on the dry lead azide particles when the particles are moved about during the automatic loading process. (Spontaneous detonation has not been observed with manual loading.) In time, the electrical charge is dissipated through the case so that no detonation has been observed after three days. The manufacturing process is now being modified to make it safer[31]. In the interim, all production components containing lead azide are being held in segregated storage for 4 hr. Further, the use of nonpropagating packaging prevents mass detonation (see par. 11-1.2.3).

2-3.4.6 SHOCK THROUGH A BULKHEAD

Mentioned here for the sake of completeness, through-bulkhead initiators (TBI) are not true initiators. A true initiator is set off by a nonexplosive stimulus whereas the **TBI** propagates a detonation front. It is a well-established fact that a detonation wave will transmit across a barrier, and such barriers are often inserted ahead of leads and boosters. The TBI makes use of a barrier, the bulkhead, which is an integral part of its housing and remains intact after functioning[32]. This construction results in a sealed unit, having

several advantageous characteristics such as temperature resistance, that is desirable for initiation of rocket motors[33].

Fig. 2-11 shows a typical TBI. It consists of a donor charge of secondary high explosive, a steel body containing a bulkhead that passes the shock output of the detonating donor charge without rupturing, an acceptor charge that is initiated by the transmitted shock, and an output charge of secondary high explosive or propellant composition as desired. For design details, see par. 5-2.5.

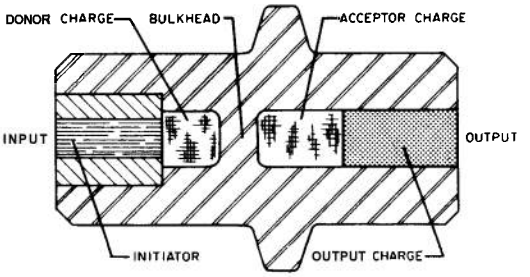

Figure 2-11. Schematic of Typical TBI

REFERENCES

a-k Lettered references are listed in the General References at the end of this handbook.

1. AMCP 706-180, Engineering Design Handbook, *Principles of Explosive Behavior.*

2. F. P. Bowden and A. D. Yoffe, *Initiation and Growth of Explosives in Liyuidsand Solids,* Cambridge University, Monographs on Physics, Cambridge Univeristy Press, N.Y. 1952.

3. M. A. Cook, *The Science of High Explosives,* Reinhold Publishing Corp., N.Y., 1958.

4. S. J. Jacobs, *Closed Bomb Burning of High Explosives and Propellants,* OSRD Report 6329, (from Explosive Research Laboratory) Office of Scientific Research and Development, January 22, 1946.

5. J. W. Taylor, "The Rapid Burning of Secondary Explosives by a Convective Mechanism", in *Third Symposium on Detonation,* Report ACR-52, Office of Naval Research, Navy Dept., Vol. 1, pp. 77-87, September 26-28, 1960.

6. R. H. Stresau, *Low Velocity Detonation of Certain Primary Explosives,* NAVORD Report 2460, Naval Ordnance Laboratory, Silver Spring, Md., 28 May 1962.

7. N. Griffiths and J. M. Groocock, *The Burning to Detonation of Solid Explosives,* Part I, "Ionization Probe Studies in Confined Channels", ARDE Report (MX) 5/59, Ministry of Supply, Armament Research and Development Establishment, Fort Halstead, Kent, England, March 1959.

8. *Proceedings of the Electric Initiator Symposium,* held at The Franklin Institute November 29-30, 1960, Report F-A2446, Papers 14 to 18, 27 (AD-323 117).

9. A. Macek, "Transition From Deflagration to Detonation in Cast Explosives", J. Chem. Phys., **31**, 1, 162-7 (1959).

10. J. Pearson and J. Rinehart, *Behuvior of Metals Under Impulsive Loads,* American Society for Metals (1954).

11. H. J. Hugoniot, de l'Ecole Polytech, **57**, 3 (1887); ***58,*** 1 (1888).

12. C. F. Curtiss and J. O. Hirschfelder, *Thermodynamic Properties of Air,* Report CF-793, University of Wisconsin Naval Research Laboratory, April 1948.

13. *Second ONR Symposium on Detonation,* Office of Naval Research, Navy Dept., February 9-11, 1955, Papers 15 to 18, pp. 205-85.

14. H. Eyring, et al., "The Stability of Detonation" Chemical Reviews, **45,** 1, 69-181 (1949).

15. L. D. Hampton and R. H. Stresau, *Small Scale Technique for Measurement* of *Detonation Velocities,* NAVORD Report 2282, Naval Ordnance Laboratory, Silver Spring, Md., 27 December 1951.

16. P. W. Cooper, *Low Firing Energy Detonator Containing No Primary Explosives,* Final Report, Contract DA-11-022-501-ORD-2892, Armour Research Foundation, 15 June 1960.

17. F. P. Bowden, et al., "A Discussion of the Initiation and Growth of Explosion in Solids", in Proc. Royal Society, Series A. Mathematical and Physical Sciences, **246,** 1245 (1958).

18. T. A. Erikson, "Some Aspects of Pure Shock Sensitivity", R. McGill and P. Holt, Eds., in *Proceedings of the Gilbert B. L. Smith Memorial Conference on Explosive Sensitivity,* NAVORD Report 5746, U. S. Naval Ordnance Laboratory, Silver Spring, Md., 2 June 1958, p. XXXV-348.

19. J. Wenograd, "The Behavior of Explosives at Very High Temperatures", in *Third Symposium on Detonation,* Report ACR-52, Office of Naval Research, Navy Dept., Vol. 1, pp. 60-76, September 26-28, 1960.

20. F. W. Brown D. J. Kusler, and F. C. Gibson, *Sensitivity* of *Explosives to Initiation by Electrostatic Discharges,* Bureau of Mines, Report of Investigations 5002, September 1953.

21. J. M. A. de Bruyne and J. A. McLean, *The Initiation* of *Booster Type Explosives by Low Energy Spark Discharges,* American Cyanamid Co., Contract DA-49-186-502-ORD-537, 1 April 1957.

22. M. T. Hedges, *Development* of *Exploding Wire Initiators,* Report 84, Picatinny Arsenal, Artillery and Rocket Development Laboratory, Dover, N.J., April 1960.

23. W. G. Chace and H. K. Moore, Eds., *Exploding Wires,* The Plenum Press, **N.Y.,** 1959.

24. *Proceedings of the HERO Congress,* held at The Franklin Institute May 24, 25, and 26, 1961, Report F-A2424, Contract N178-7705, papers 12, 23, 25 (AD-326 263).

25. M. J. Bartarisi and E. G. Kessler, *Initiation* of *Secondary Explosives by Means of Laser Radiation,* Report TR3861, Picatinny Arsenal, Dover, N. J., May 1969.

26. R. L. Wagner, *Lead Azides for Use in Detonators,* Report TR 2662, Picatinny Arsenal, Dover, N. J., January 1960.

27. E. Demberg, "Accidents/Incidents Encountered in Detonator/Primer/Fuze Production", *Minutes* of *the Second Annual DCASR, Atlanta Explosives Safety Seminar,* held in Atlanta, Georgia, 23-25 May 1972.

28. R. L. Wagner, *Shock Initiation Through a Barrier,* Report TR 3085, Picatinny Arsenal, Dover, N. J., September 1963.

29. **U.S.** Patent 3,238,876,. *Method for Through-Bulkhead Shock Initiation,* (McCormick Selph Assoc., Inc.) March 1966.

CHAPTER 3

DETONATION TRANSFER AND OUTPUT

3-1 EFFECTIVENESS OF ONE CHARGE IN INITIATING ANOTHER

3-1.1 DETONATION PROPAGATION

In some instances, two charges are in such close contact that the transfer of detonation from one to another is indistinguishable from the propagation within a single continuous charge. More often, however, packaging, structural, and fabrication considerations result in the interposition of gaps and barriers of such magnitude that the agency of transmission is nonreactive shock, blast, flying fragments, or some combination of these. The conditions induced by such interruptions differ in important respects from those of stable detonation. In general, it takes time and space to re-establish detonation in the receptor charge' .

Fig. 3-1 illustrates a detonation front as recorded by a streak camera. Investigators agree that detonation of the receptor first occurs at a point within the receptor charge rather than at a surface exposed to the initiating impulse[2]. Although this phenomenon must be taken into account in the design of initiation systems for main charges whose effectiveness is critically influenced by the form of the detonation wave front, it is generally ignored in other explosive train charges. For most practical purposes, transfer of detonation is considered in terms of the probability that high order detonation will be induced in the receptor.

High order detonation is defined as that in which the detonation rate is equal to or greater than the stable detonation velocity of the explosive. It is rarely practical, however, to instrument real charges for detonation rate measurements. Hence, high order detonation is generally considered to be a reaction whose effects are not significantly less than the maximum that has been observed with a charge of the type in question. For main charges, high order may be considered in terms of the desired effects of the charge. Booster charges, as usually used, tend either to detonate high order by almost any criterion or to fail completely.

A proposed law of similitude for sympathetic detonation states that the critical distance for transmission between one explosive charge and another varies with the cube root of the weight of the donor charge[3]. However, where the intervening space was filled with air rather than solids, a trend was noticed toward a relationship of the *2/3* power of the charge weight[4].

3-1.2 DIMENSIONAL INTERACTIONS

The effectiveness of one charge in initiat ng another is determined by the interaction of the properties of the explosive, its load ng density, and the dimensions and confinement of the charge. The interaction is such that it would be impractical to discuss these factors separately, except in broad generalities.

Although, as might be expected, the effective output of a donor charge increases systematically with its diameter, the relationship between acceptor diameter and sensitivity is more complex (see Fig. 3-2[a]). Note that the optimum diameter of an acceptor, from the point of view of the air gap across which it can be initiated, is slightly less than the diameter of the donor. This relationship

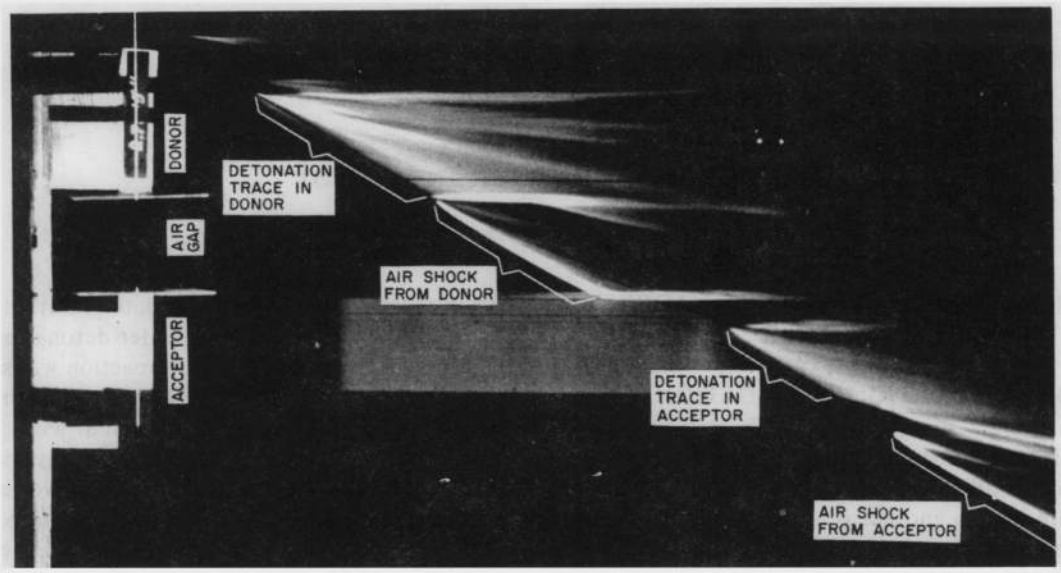

Figure 3-1. Streak Camera Record of Detonation

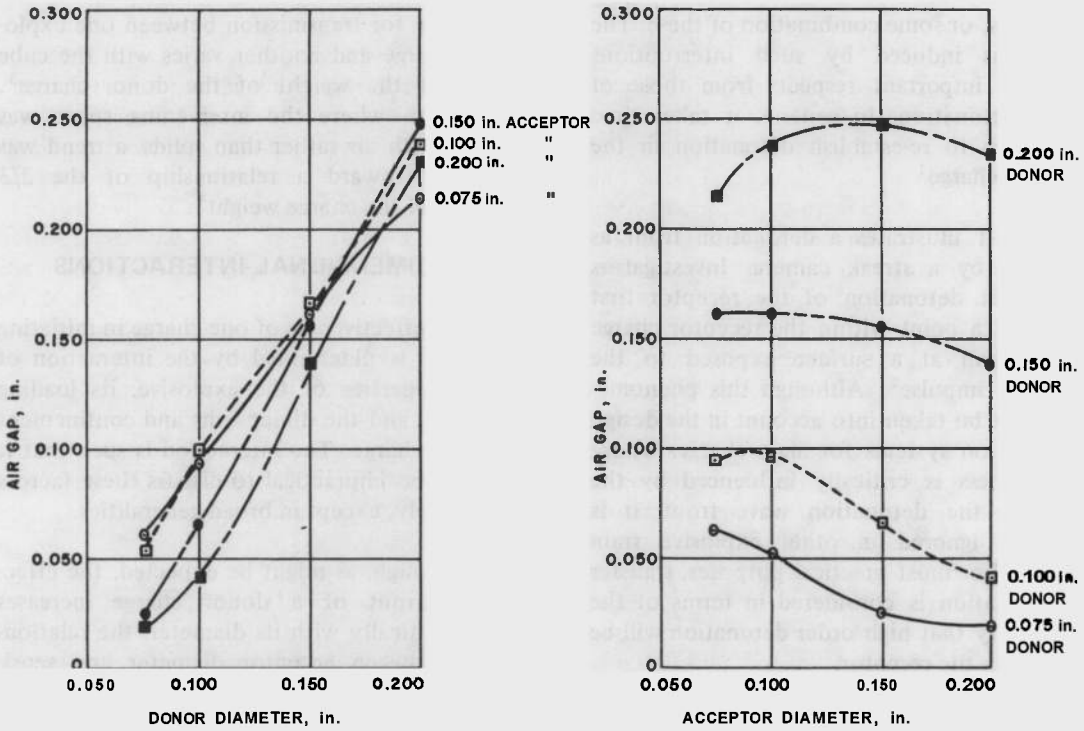

Figure 3-2. Critical Gap as a Function of Column Diameter

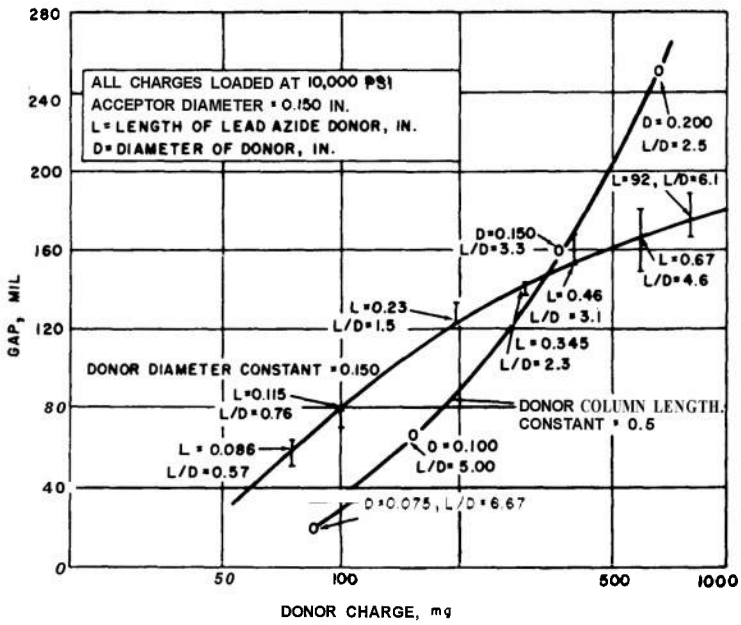

Figure 3-3. Critical Axial Air Gaps Across Which Detonation Is Transmitted Between Lead Azide and Tetryl

applies specifically to well confined columns of explosive.

As might be expected, beyond a certain minimum height the increase in the weight of a donor charge is more effective in increasing output if it is due to a diameter increase than to a length increase (see Fig. 3-3[a]).

Most experimental determination of the relative effectiveness of explosive charges in initiating other charges has been done as part of a study of a specific system. Hence, the variables are generally so intermingled as to make generalizations from such data difficult. However, the evidence that the volume of dent which a charge makes in a steel block is nearly proportional to its effectiveness as an initiator, combined with relatively broad and interpretable plate-dent data, makes it possible to derive relationships that appear to have relatively broad applicability' .

Confinement has a significant effect. In relatively thin-walled containers, confinement is related to the weight ratio of case to charge. For heavily confined charges (where the wall thickness exceeds the charge radius) the shock impedance of the confining material is a good criterion of confinement effectiveness. The object of confinement is to have the greatest mismatch possible between explosive and container material so that as much of the detonation wave as possible is reflected back into the explosive. Shock velocities of various metals are listed in Table 3-1 (see also par. 5-3.2.3.5).

3-2 SENSITIVITY TO INITIATION

3-2.1 SENSITIVITY TESTS

3-2.1.1 STANDARD TESTS

The sensitivity of an explosive charge to initiation by another is the result of the interaction of a number of variables. This interaction has not been reduced to a formula. However, a review of available tests should help the designer to develop an

TABLE 3-1

DENSITIES AND SHOCK VELOCITIES IN VARIOUS METALS

Metal	Density, g/cm^3	Shock Velocity, mm/μsec
Aluminum	2.71	7.00
Babbitt	9.73	3.25
Brass	8.50	4.57
Bronze	8.80	4.82
Copper	8.9	4.6*
Lead	11.3	2.1*
Magnesium	1.76	7.83
Steel	7.85	5.30
Zinc Alloy (die cast)	6.60	3.95

"Ref. 6

intuitive grasp of the effects and interactions of the various factors involved. The fact that results obtained by various procedures differ does not necessarily imply that one is right and another wrong or that one is necessarily better. Each. may be completely valid as a measurement of the sensitivity of an explosive under the conditions of the test.

One test employed to measure sensitivity to initiation is the booster sensitivity test in which a gap between donor and test charge is filled with wax (see par. 12-2.1.2.5 for a description of the test). Typical results are shown in Table 3-2[7]. The 50% gaps were determined by means of Bruceton tests (see par. 12-1.2.2). Results of several other tests are compared in Table 3-3.

3-2.1.2 GAP TESTS

The small scale air-gap test has been employed by a number of investigators. In this test, donor and acceptor explosives are separated by a variable air gap (see Fig. 3-4[a]). Gap distance is the measure of sensitivity[k].

In Fig 3-5[a], results of this test are compared with average impact sensitivity results. Impact data for the various explosives were compared with results obtained with the small scale gap test. This test consists of determining the minimum priming charge by loading the explosive into a cup of a blasting cap with a priming charge of DDNP. Both donor and

TABLE 3-2

TYPICAL RESULTS OF BOOSTER SENSITIVITY TEST

Explosive	Preparation	50% Gap, in.	Density, g/cm^3
Amatol 80/20	Pressed	0.83	1.65
Amatol 50/50	Cast	0.60	1.55
Composition A-3	Pressed	1.70	1.62
Composition B	Cast	1.40	1.69
Composition C	Pressed	1.36	1.56
Composition C-3	Pressed	1.36	1.62
Cyclonite (RDX)	Pressed	2.33	1.54
DBX	Cast	1.35	1.76
Ednatol 55/45	Cast	1.28	1.62
Explosive D (Ammonium Picrate)	Pressed	1.27	1.54
Haleite (EDNA)	Pressed	2.09	1.42
Minol-2	Pressed	1.46	1.74
Nitroguanidine	Pressed	0.67	1.41
Pentolite 50/50	Pressed	2.36	1.61
Pentolite 50/50	Cast	2.08	1.65
Picratol 52/48	Cast	1.00	1.63
Tetryl	Pressed	2.01	1.58
Tetrytol 75/25	Cast	1.66	1.66
TNT	Pressed	1.68	1.55
TNT	Cast	0.82	1.60
Tritonal 80/20	Cast	0.58	1.75

TABLE 3-3

INITIATION SENSITIVITY MEASURED BY SEVERAL TESTS

Explosive	Min. Prim.[a] Chg., g	Impact Tests: PA[b], in.	Impact Tests: Bu. Mines[b], cm	Impact Tests: ERL[c] No. 12	Crit. Air Gap[d] 0.2 in. Diam., in.	Crit. Lucite Gap[e] 50% Gap in.	Crit. Lucite Gap[e] 50% Gap DB_g
Composition B (Desens.)	0.19	14(17)	95	82	–	0.266	55.75
Cyclonite (RDX)	–	8(18)	32	–	0.318	0.470	3.28
Cyclonite/Wax							
9911	–	–	–	34	–	–	–
9812	–	–	–	35	–	–	–
9713	–	–	–	43	–	–	–
9515	–	–	–	47	–	–	–
9119 (Comp. A-3)	0.21	16(17)	>100	–	–	–	–
Cyclonite/Calcium Stearate							
99.310.7	–	–	–	–	–	0.392	4.07
98.6/1.4	–	–	–	23	–	0.332	4.79
98.012.0	–	–	–	37	0.144	0.313	5.04
97.212.8	–	–	–	32	–	0.299	5.25
Pentolite, 50150	0.12	12(15)	34	38	–	–	–
10190	–	14(18)	65	–	–	–	–
PETN	0.09	6(16)	17	–	0.47	–	–
Tetryl	0.17	8(18)	26	–	0.184	0.434	3.63
Tetrytol, 70130	0.19	11(18)	28	–	–	–	–
TNT, Pressed	0.25	14(17)	> 95	–	–	0.281	5.52
Cast	–	–	–	–	–	0.021	16.7

[a]Ref. 8. Table shows charge in grams of DDNP to initiate material pressed to density of 1.4 g/cm^3
[b]Ref. d. Figures in parentheses are sample weights in mg.
[c]Ref. 10, 11.
[d]Ref. 9.
[e]Donor – RDX, 1 in. long, 0.2 in. diameter. Pressed in steel at 10 kpsi.

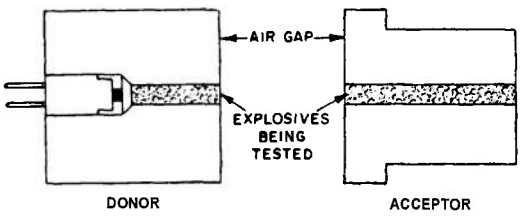

Figure 3-4. Small Scale Air Gap Test

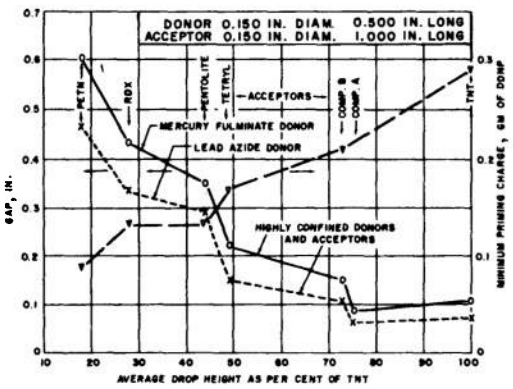

Figure 3-5. Minimum Priming Charge and Gap for Critical Propagation

acceptor were loaded at 10,000 psi. Bruceton tests of from fifteen to fifty trials formed the basis of the estimates of the gap. For these tests, the logarithm of the gap length was assumed to be a normalizing function.

A refinement of the small scale gap test is illustrated in Fig. 3-6[12]. Here, a steel dent block is added and the gap filled with Lucite. Further, data are analyzed by the gap decibang method. The gap decibang DB_g is analogous to the decibel in that it expresses not an absolute energy or stimulus but rather a comparison with some arbitrarily established reference level.

This method of expressing explosive sensitivity is based on a function that transforms sensitivity data into a normal distribution in which the explosive response increases with increased initiation intensity. Because the initiation intensity is increased by reducing the attenuation of the output of a standard

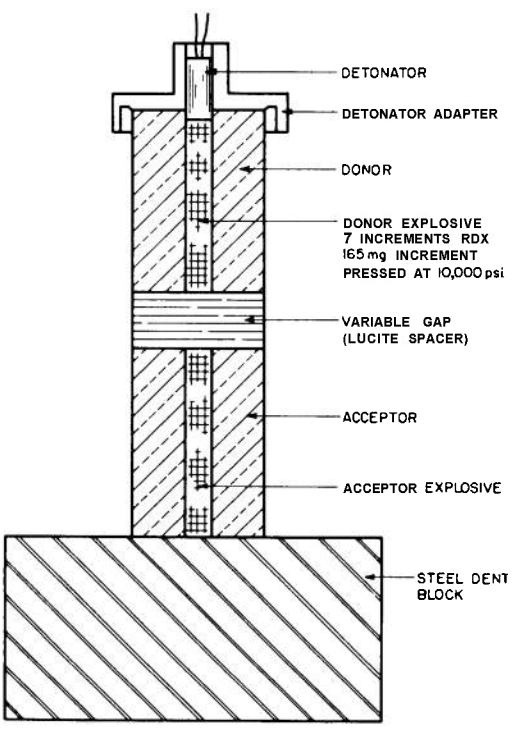

Figure 3-6. Small Scale Lucite Gap Test

donor, the transformation function will show the stimulus to be an inverse function of barrier thickness. The transformation function is

$$X = A + 10\,B \log(G_r/G_t) \qquad (3\text{-}1)$$

where

X = stimulus, DB_g (gap decibang)

A,B = arbitrary constants

G_r = reference gap, in.

G_t = observed test gap, in.

The reference gap has been selected to be 1.0 in. using a high-intensity RDX-loaded donor.

Corresponding values of decibang intensity and gap thickness are shown in Table 3-4. Table 3-5[12] lists sensitivities of some explosives in gap decibangs as determined by the small Lucite gap test. It is possible that the method of gap decibang analysis may have a broader application than that of an arbitrary intensity measure. It may serve, for example, as a unit of effective initiating output of detonator, lead, or booster. The relationship between the dent produced by a donor acting through a barrier or gap and the gap decibang level of the combination appears to be linear.

3-2.2 VARIABLES AFFECTING SENSITIVITY

3-2.2.1 LOADING DENSITY

The voids that are present in most explosive charges affect the initiation sensitivity by

TABLE 3-4

RELATION OF DECIBANGS TO GAP THICKNESS

Intensity, DB_g	0	3	6	9	10	13	16	19	20
Thickness, mil	1000	501	251	126	100	50.1	25.1	12.6	10.0

TABLE 3-5

SENSITIVITIES OF SOME EXPLOSIVES ACCORDING TO THE SMALL SCALE LUCITE GAP TEST

Explosive	Loading Pressure, kpsi	Loading Density, g/cm³	Sensitivity, DB_0
Cyclonite (RDX)	10.0	1.5649	3.283
Cyclonite (RDX)	38.2	1.7373	5.069
TNT	Cast	1.5746	16.5
TNT	6.2	1.4078	4.635
TNT	19.0	1.5835	6.114
Tritonal	Cast	2.0557	17.5

providing reaction nuclei and by reducing the pressure in the reaction zone. These effects, of course, interact with those of charge size, confinement, and the nature of the transmitting medium. Results obtained with pressed, granular explosives in the wax gap sensitivity test are plotted in Fig. 3-7[13]. For material with less than one percent voids, failures were observed with no barrier at all. Results with small scale gap tests were similar. Some data are included in Table 3-5[14]. Fig. 3-8[14] shows the results of a test with RDX, tetryl, and TNT.

3-2.2.2 LOT-TO-LOT VARIATIONS

The variable with the largest effect on lot-to-lot uniformity is loading density. While there are other differences in explosives which cannot be explained in terms of density effects alone, these are difficult to pinpoint and even more difficult to control[9,13]. Particle size and its distribution are variables that have been shown to have an appreciable effect on the sensitivity of explosives.

3-2.2.3 ADDITIVES

The addition of a few percent of a waxy substance, such as calcium stearate, reduces

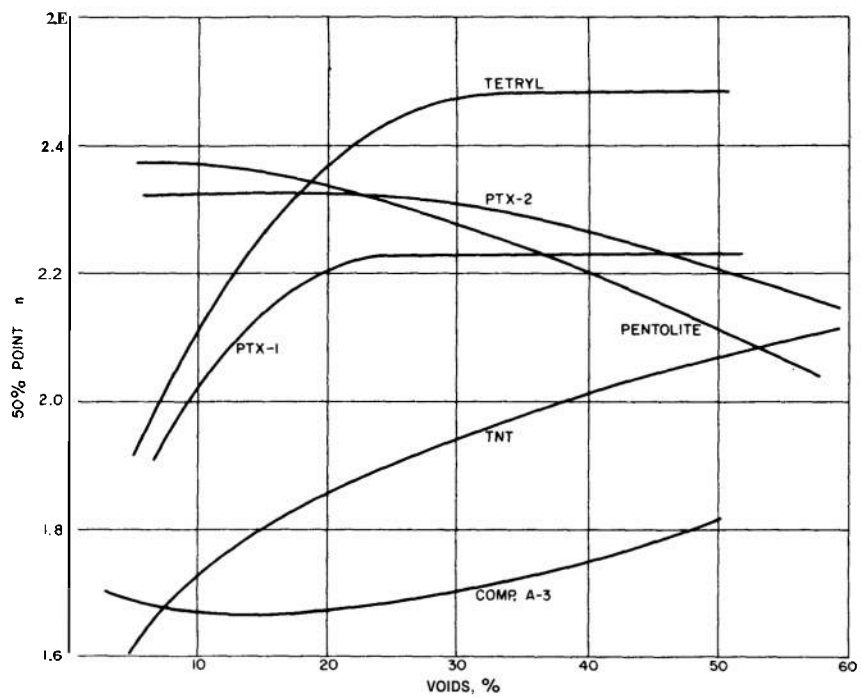

Figure 3-7. Effect of Voids on Booster Sensitivity (Wax Gap Test)

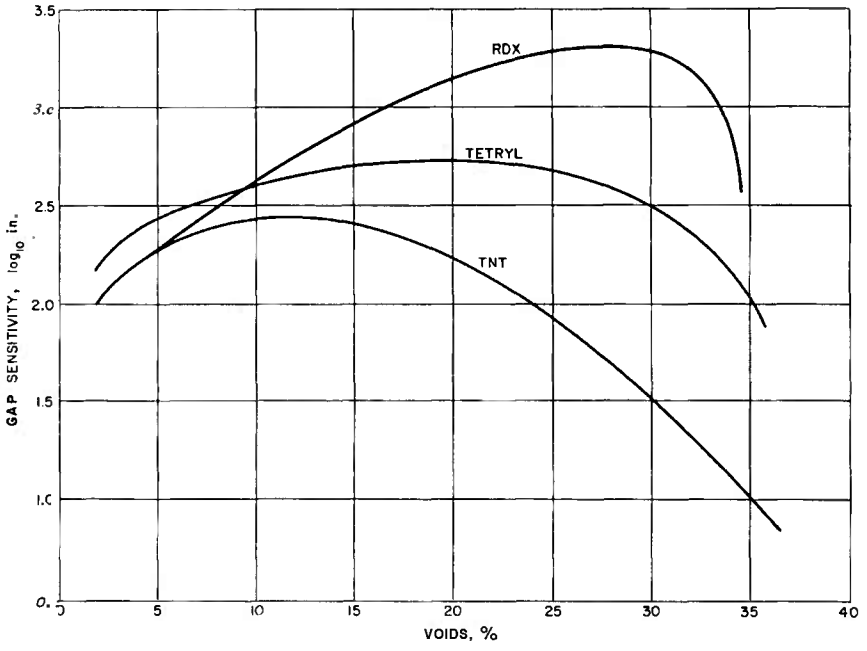

Figure 3-8. Effect of Voids on Booster Sensitivity (Lucite Gap Test)

the sensitivity of RDX by a factor of two or three, as indicated by the air gap test. This effect may be noted in Table 3-3, although on closer consideration, it is apparent that a large measure of this desensitization is attributable to the higher density attainable at the same loading pressure when a lubricant is added.

In Table 3-6, the effects of added wax on the sensitivity of a number of cast explosives are given as measured by the wax gap booster sensitivity test.

3-2.2.4 CONFINEMENT

Critical air gaps as determined by the test illustrated in Fig. 3-4 are related to confining media of the acceptors used as shown in Fig. 3-9. However, as may be seen in Table 3-7[15], the agreement is somewhat less than perfect.

The sum of a dimensionless density with a dimensionless Brinell hardness has been proposed to relate the effect of the confining medium to sensitivity. This relation is shown in Fig. 3-10[16]. Almost the identical plot results if Brinell hardness is replaced with a dimensionless strength. All of the data were obtained with tetryl acceptor charges. The effect of confinement upon sensitivity varies considerably from one explosive to another[1]. For small columns the differences become more marked.

TABLE 3-6

EFFECT OF 5 PERCENT D-2 WAX ON THE BOOSTER SENSITIVITY OF VARIOUS CAST EXPLOSIVES (Wax Gap Test)

Explosive	Unwaxed, in.	Waxed, in.	Difference, in.
Baronal	0.86	0.64	-0.22
Comp. B	1.32	1.16	-0.16
Pentolite	2.08	1.96	-0.12
Picratol 52/48	1.00	0.88	-0.12
PTX-2	1.87	1.63	-0.24
TNT	0.82	1.03	+0.21
Tritonal 80/20	0.58	1.04	+0.46

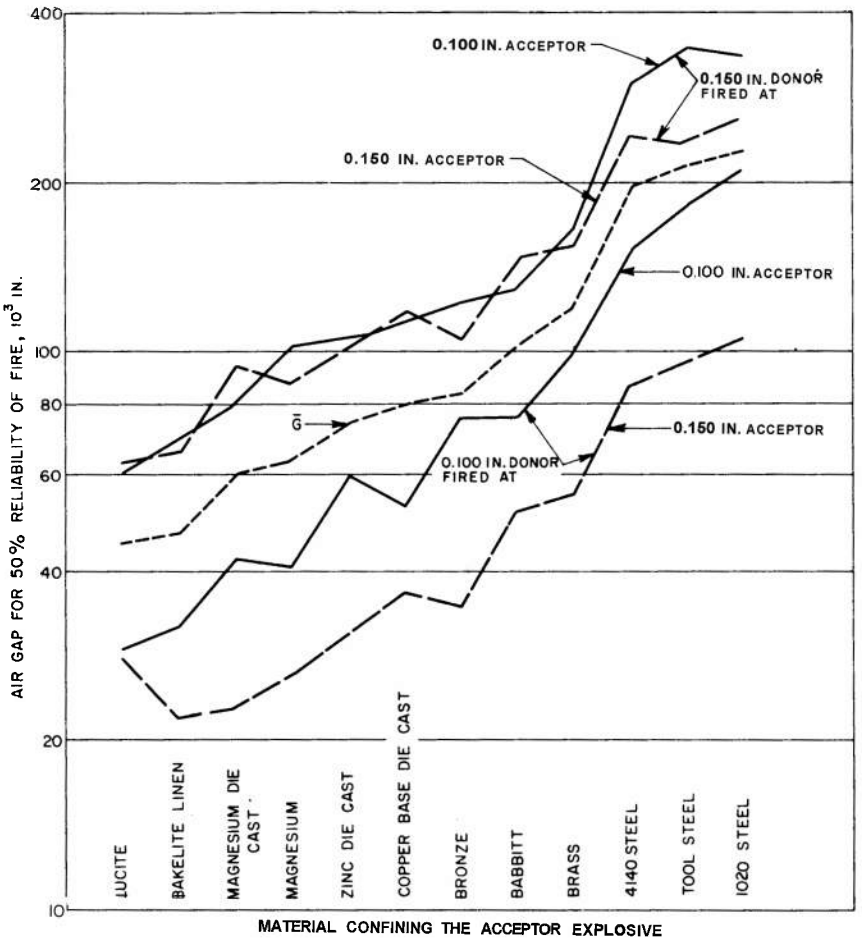

Figure 3-9. Effect of Acceptor Confining Material upon Sensitivity in an Air Gap Test

TABLE 3-7

AIR GAP SENSITIVITY RELATED TO ACOUSTIC IMPEDANCE OF ACCEPTOR CONFINING MEDIUM

Confining Medium of Acceptor	Shock Impedance of Acceptor Confinement,. megarayl	Critical Air Gap*, in.
Lucite	0.7	0.063
Magnesium	1.4	0.088
Zinc (die cast)	2.6	0.101
Babbitt	3.2	0.148
Brass	3.9	0.153
Steel (SAE 1020)	4.2	0.260

*Lead azide to tetryl, 0.150-in. diameter columns

3-2.2.5 GAPS AND BARRIERS

In one way or another, gaps, barriers, or spacer materials are components of explosive systems. In some instances, these features are designed into a train to achieve a desired effect. In other cases, they are inherent to construction just as is confinement. Bottoms of cups are barriers and manufacturing tolerances introduce gaps. In some instances, the combination of gaps and barriers are beneficial. For example, barrier fragments have transmitted detonation over a gap that was sometimes forty times that across which the air blast wave alone could carry it.

Available experimental data relating the

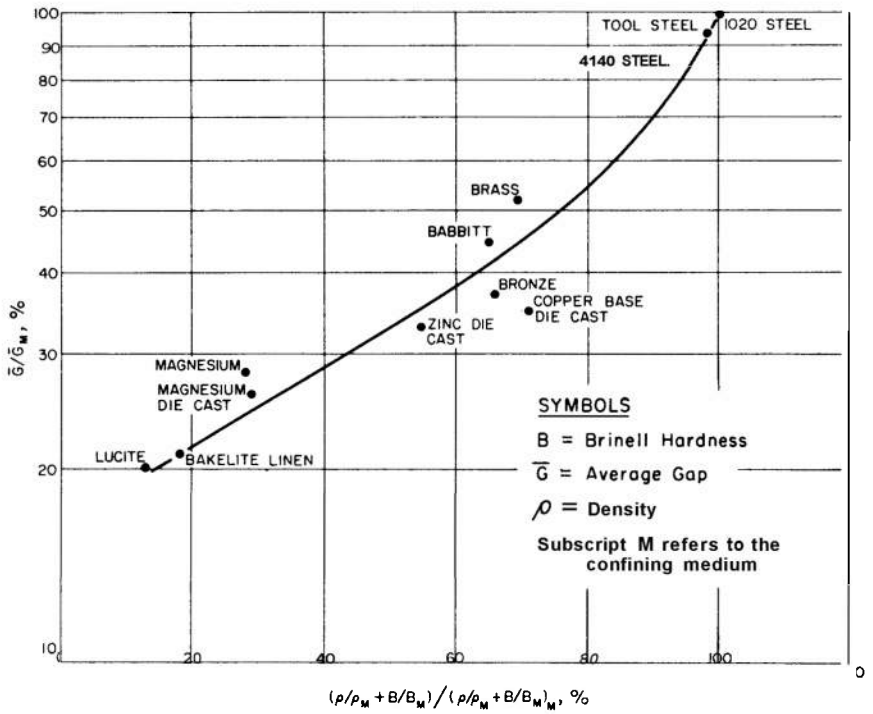

Figure 3-10. Gap Sensitivity Related to Density and Hardness of Acceptor Confining Medium

variables are not complete. Fig. 7-4 compares performance under service conditions for several gap and barrier combinations both unconfined and confined. In Table 3-8[7] the effect of changing the spacer material in the wax-gap booster test is given for four explosives and a number of spacer materials. Attention is directed to the air gap data. It has been suggested that the mechanism of transmission across an air gap to the more sensitive materials must involve factors other than shock pressure.

3-2.3 MISALIGNED CHARGES

Out-of-line safety is a general requirement of fuzes. The usual situation is that of two well-confined columns of explosives, one of which is displaced laterally with respect to the other as in Fig. 3-11[a]. Propagation occurs near the point where the expanded hole of the donor becomes tangent to the original acceptor charge. In an experiment with PETN and RDX, transmission occurred when the charges were displaced somewhat beyond the point of tangency. It was also observed that these explosives sometimes detonated from an apparent central initiation point. Out-of-line safety should always be tested to make certain that the train does not propagate in the safe position (see par. 12-2.4).

3-3. OUTPUT

3-3.1 NATURE OF EXPLOSIVE OUTPUT

The mechanism whereby useful output is derived from an explosion is essentially that of a heat engine. Heat is transformed into mechanical energy by the adiabatic expansion of hot, compressed gas. As a heat engine, the detonation of a military high explosive is remarkably efficient. Over seventy percent of the theoretical heat of explosion usually appears as measurable mechanical output. However, the effectiveness of an explosive

TABLE 3-8

SENSITIVITY FOR VARIOUS SPACER MATERIALS (Wax Gap Test)

Spacer Material	50 Percent Point, in. Tetryl	Comp. B	HBX	Pentolite
Air	5.04	1.21	0.93	5.01
Wood (oak)	1.39	1.04	0.93	1.47
Copper	1.69	1.17	0.86	1.92
Polystyrene	1.85	1.43	1.19	1.90
Acrawax B	1.89	1.46	1.28	2.08
Aluminum	1.90	1.51	1.33	2.05
Stanolind Wax	2.07	1.50	1.28	2.06

charge in any particular application is not necessarily directly related to its total mechanical energy output. Only a small fraction of the energy usually reaches the target and, of this, most is usually either reflected or absorbed without damange to the target. Hence, effectiveness is characterized in terms of the various phenomena that are used to transmit the output to the target. These phenomena include shock waves, gross movements of such intervening media as air, water or earth, and the projection of metal or other materials that are inert components of explosive items. All of these phenomena accompany most explosions, but the partition of energy between them varies greatly with variation of design and composition, as do other quantities associated with each phenomenon which may be more important than energy in determining relative effectiveness.

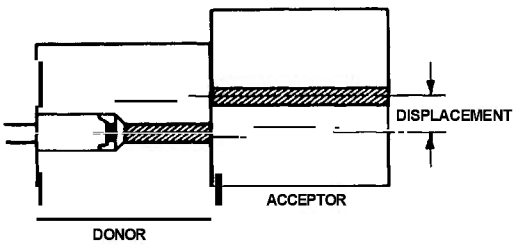

Figure 3-11. Arrangement for Propagation of Misaligned Charges

For these reasons, characterization of the output of an explosive charge in terms of the phenomena involved in its intended application is the most valid basis for comparison with charges of other designs and loadings. Examples of such phenomena are blast and fragmentation.

The theory of detonation waves is described in par. 2-2.3. The calculations discussed are based on a number of assumptions that include ideal detonation (Chapman-Jouguet conditions) and a certain reaction chemistry. Although in many investigations agreement has been attained between experiment and theory, many of the most interesting and important aspects of the output behavior of real charges stems from their nonideality or from deviations in their chemical or thermodynamic behavior from those commonly assumed. For these reasons, more quantitative predictions of performance are made by use of the empirical relationships based on measurements of output phenomena.

An introduction to actual detonations, those which are theoretically nonideal, is contained in par. 2-2.3.3.

3-3.2 EFFECT OF CHARGE CONFIGURATION

3-3.2.1 THE DETONATION FRONT

As a first approximation, detonation may be considered to propagate in all directions within a homogeneous charge at the same velocity. Thus, if a charge is initiated by a relatively concentrated source, the detonation front assumes a divergent spherical form. This curvature (convex in the direction of propagation) is accentuated at the boundaries of the charge (see par. 2-2.3).

Such curvature, if its radius is small enough to be comparable with the reaction zone length, results in a reduction of detonation velocity and pressure from that associated

with ideal detonation. The explosives used in applications where detonation pressure is a prime consideration (pentolite, Compositions A-3 and **B** and cyclotols) have reaction zone lengths of the order of a millimeter or less so that this effect is not usually important. However, with small charges of such materials as TNT, Explosive D, or tritonal, they can assume importance. In addition, the pressure and its gradient vary radially. For some applications, most notably the controlled propulsion of solids, wave front profiles, and pressure distributions other than those resulting from the action of hydrodynamic laws in simple charge configurations are desirable. For such purposes, special configurations have evolved.

One of the results of pressure variation behind the detonation front is the variation in momentum which the detonation wave imparts to solid objects. Where it is desired to propel an object of uniform thickness which has a relatively large area in contact with a charge, these variations in momentum result in corresponding velocity variations that may result in distortion or even rupture of the object. This problem may be alleviated by either of two means although they are generally combined:

1. Distributing the explosive charge so as to reduce the variation in momentum transfer, or

2. Adding mass at points where momentum is greatest.

The hydrodynamic relationships that determine momentum distribution in finite explosive charges are too complex to be solved analytically. However, they have been programmed for solution by computer[18]. Intuitive reasoning and cut-and-try development have yielded satisfactory designs in the past.

3-3.2.2 WAVE SHAPING

The control of the profile of detonation fronts has been the subject of much research[8]. All techniques are essentially applications of Huygens' principle that forms the basis of geometric optics. For ultimate refinement, account must be taken of the fact that detonation velocities are not precisely constant, but satisfactory control for many purposes is possible by designs that ignore the relatively small variations. The following four means of controlling the sequence of arrival of detonation waves at various points in a charge have been used[8,19]:

1. Wave interrupters that require the wave to go around the interrupter.

2. Two explosives of appreciably different rates of detonation.

3. Density and composition variations in the explosive.

4. Air, inert fillers, or both of such thickness as to delay the wave but not destroy it.

Perhaps the simplest devices for the control of wave front profiles are line wave generators. Those of the manifold type (Fig. 3-12) have been made by loading explosives into channels machined, molded, or cast into metal or other inert components and by constructing arrays of detonating cord. The detonating cord arrays were, of course, limited to relatively large systems by the spacing needed to prevent initiation or damage due to radial blast effects of adjacent cords.

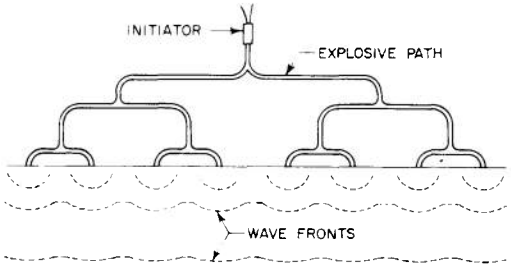

Figure 3-12. Line Wave Generator of the Manifold Type

The advent of mild detonating cord (MDC) opens new possibilities in manifold type wave shaping devices (see par. 9-2.2.1). In such applications, particular attention should be given the problem of transmission of detonation from the very small column diameter of MDC to the larger charges in which it is hoped to control the wave front profile. Even though reliable transmission is assured, the build-up may introduce enough time scatter to nullify the wave shaping effects. Step construction or a tapered lead should result in a satisfactory system.

Another line wave generator of the manifold type consists of perforated sheet explosive (see Fig. 3-13).

In addition to such generators, warped surfaces may be used to produce line waves of any desired curvature. The circular front generated by the point initiated detonation of a plane charge, may also be modified by warping the plane and by tranmission to other explosive surfaces. One example, illustrated in Fig. 3-14, is the generation of a straight line wave by means of warped sheet explosive.

3-3.3 BLAST

Blast is the brief and rapid movement of air or other fluid away from a center of outward pressure, as in an explosion, or it is the pressure accompanying this movement. Physical manifestations of blast include (1) a shock front that is created by the rapidly expanding gases being opposed by the medium around the explosive, (2) a time period in which the pressure drops to ambient, (3) a continued

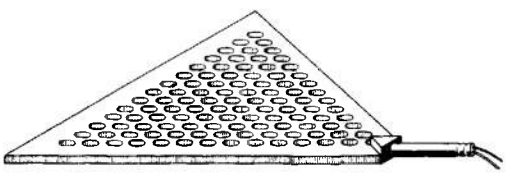

Figure 3-13. Line Wave Generator of Sheet Explosive

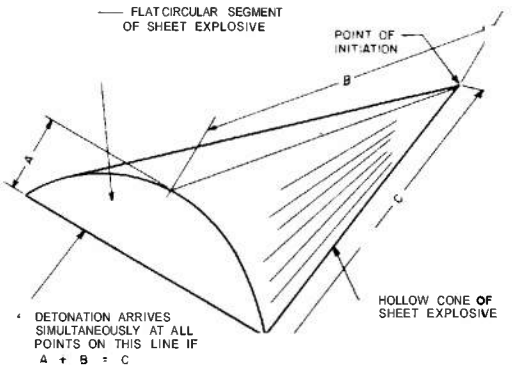

Figure 3-14. Line Wave Generator of Warped Sheet of Explosive

pressure drop below ambient, and finally (4) a return to ambient pressure. Fig. 3-15[b] shows this pressure-time relationship resulting from reactions of explosive charges. The area under the curve above ambient is called impulse.

The blast wave is produced by a process that may involve several steps. It always involves an initial explosion. It may be enhanced by the afterburning or reacting of the explosive products with themselves and with the oxygen in the air. It may also be enhanced by shock reflection from surfaces such as ground, water, or walls.

Blast decreases in magnitude at a ratio equivalent to the cube root of the distance from the charge. Blast pressures P are plotted on graphs as P vs $r/W^{1/3}$ where r is the distance from the charge and $W^{1/3}$ is the cube root of the charge weight. Various design equations and graphs have been evolved for predicting the output from explosive charges, most of which are the results of empirical studies. The parameters that affect blast include

1. type of explosive
2. confinement
   material used
   thickness of material
3. configuration of explosive charge

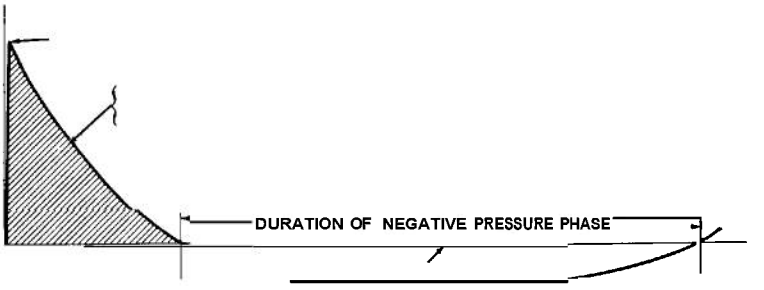

4. effects of exterior media
   atmospheric pressure
   water

5. reflection of blast from surfaces
   exterior blast
   interior blast.

The studies conducted with explosives showed that there exists a generalized relationship between energy of the explosive and the output in terms of peak pressure and impulse. An equation for estimating the blast pressures of cylindrical charges is available in classified literature[20].

It was found that steel confined charges generally produce decreasing amounts of blast output with increasing thickness of confinement[21]. The only exception is a very thin steel confinement that appears to produce a blast output equal to or slightly better than bare charges. This probably is due to the fact that some unconfined charges break up partially during explosion. Certain materials when used as confining media for explosives appear to react in an explosive manner[22], i.e., they increase the blast output when they confine explosives. Some rubbers and plastics exhibit this behavior.

Studies of the effects of altitude on blast showed that there is a constant decrease in blast output with altitude[23]. For practical purposes, there is a 1% decrease in excess pressure for every 1000-ft altitude.

The foregoing studies were concerned with exterior blasts far from ground or reflective surfaces. If the charge is exploded close to a surface, the shock wave that reaches this surface will be partially reflected. The reflected wave may subsequently catch up with the original shock wave and reinforce it. The reason for its catching up is that the reflected wave travels through the hot gases of the explosive where its velocity is greater. If many reflective surfaces are available, the resulting blast damage can be considerably greater than that without reflective surfaces. The interior of a structure or vehicle offers many such reflective surfaces. Consequently, the damage produced by exploding a blast charge inside an enclosure is considerably greater than that outside of it. Less than 20% of an explosive may be required for an interior blast kill compared with an exterior one.

Most ammunition is limited in size for tactical reasons. Hence, the designer must look for the blast explosive that produces the highest blast damage for a given volume. The missile warhead designer faces a weight limitation in the same manner.

3-3.4 FRAGMENTATION

3-3.4.1 FRAGMENTATION CHARACTERISTICS

As a manifestation of explosive output, fragmentation is characterized by velocity and size distribution of fragments. For some

purposes, the size and shape of fragments are predetermined either by preforming or by modifications of the case or charge design which predisposes it to break as desired. Many studies have been carried out both for fragmentation projectiles[4] and for specialized fragmentation warheads[5].

The initial velocity of fragments is quite accurately predicted by the Gurney formulas

for cylinders v_o =

$$\sqrt{2E}\sqrt{\frac{W_c/W_m}{1 + 0.5\, W_c/W_m}}\ \text{, ft/sec} \qquad (3\text{-}2)$$

for spheres v_o =

$$\sqrt{2E}\sqrt{\frac{W_c/W_m}{1 + 0.6\, W_c/W_m}}\ \text{, ft/sec} \qquad (3\text{-}3)$$

where

v_o = initial fragment velocity, ft/sec

$\sqrt{2E}$ = Gurney constant, ft/sec

W_c = charge weight, lb

W_m = weight of fragmenting metal, lb

The empirical constant E is determined for a particular range of explosive to metal ratios. It is expressed as the quantity of energy per unit mass of explosive which is available as kinetic energy of the fragments. In general, this is somewhat more than half of the energy of detonation. Rather than reducing the quantities to theoretical terms, Gurney constants are usually given as velocities. Table 3-9 includes Gumey constants for some explosives of military interest. Initial fragment velocities have been computed and are available in tabular form[6].

The lethality of a fragment is a function of its velocity, weight, and presented area. The problems of assessing lethality and vulnerability are quite difficult because the seriousness of the damage inflicted depends first on the nature of the target and then on the point of impact and direction of the flight of the fragments with respect to the target as well as its size, velocity, shape, attitude, and materials. Ref. 33 provides a quantitative treatment of fragmentation.

TABLE 3-9

GURNEY CONSTANTS FOR COMMON EXPLOSIVES

Explosive	$\sqrt{2E}$, ft/sec
Composition B	8800
Pentolite	8400
TNT	7600

The determination of the optimum fragment size, in addition to the lethality considerations, requires an estimate of the probable location of the fragmenting charge with respect to the target at the time of burst and a knowledge of the azimuthal distribution of the fragments. In some instances relative movement of the charge and target is an important factor. The position of the charge with respect to the target is sometimes a design variable that is combined with other factors to maximize effectiveness. For example, in an air-burst antipersonnel weapon, burst height, fragment size, and azimuthal distribution are combined to maximize the lethality.

When a projectile or other container is burst by the explosion of the explosive contained, the sizes of the fragments produced vary according to a statistical distribution. Of course, this size is also affected by the charge-to-case mass ratio and by the physical properties of the case material. Where all aspects of the design of a fragmentation round or head may be varied to optimize a design, the choice of explosive is simplified by this general tendency for explosives that produce the fastest fragments to also produce the finest fragments. The explosive with the highest Gurney constant may thus be expected to be capable of producing the

largest number of lethal fragments.

Where a case originally designed for anti-personnel use is to be adapted for use against more resistant targets, high performance explosives may break it into fragments too small for effectiveness. In such situations a less brisant explosive may improve effectiveness. Generally, in projectiles such considerations as structural strength to resist setback and spin accelerations dictate the use of a case that forms coarser fragments than is desirable even with the most brisant explosive[27].

3-3.4.2 CONTROLLED FRAGMENTATION

Since the breakup of charge cases under explosive attack is mainly two dimensional, the average size of fragments may be reduced and their number increased by the use of multiple walled cases. A wide variety of other methods have been used to produce fragments that are almost all of the optimum size and shape. Methods which have been used include[24]:

1. preformed fragments (with or without matrix)
2. notched or grooved rings
3. notched or grooved wire
4. notched or grooved casings
5. fluted liners.

One form of preformed fragment is a rod. In controlled experiments, a rod has been found to be more effective against aircraft than the same weight of metal broken into smaller pieces. It can sever important structural members rather than merely perforate them.

A discrete rod warhead consists of a number of rods (usually of steel) arranged like the staves of a barrel to form a cylindrical container. They are joined together with sufficient strength to provide the needed structural, strength for handling, launching, and flight but in such a manner that their movement under the action of the explosive will not be impeded significantly. This container, completed with suitable end plates and usually with auxiliary thin liners, is loaded with the explosive.

A continuous rod warhead differs from a discrete rod warhead in that the rods are strongly joined to one another at alternate ends in a pattern similar to that of a folded carpenters' rule. This hoop breaks when its circumference equals the sum of the rod lengths, if excess energy is imparted by the explosive.

The value of a discrete rod fragment depends upon maintenance of its shape (as a relatively straight rod) and its attitude such that its long axis is at right angles to its path. The value of a continuous rod depends upon its retaining its integrity as such. Each of these requirements, in turn, rests on a basic requirement that the velocity imparted to each element of the length of the rod is the same as that for each other element. This is the most important application of the momentum distribution control discussed in par. 3-3.2.1. The losses of pressure at the ends cause the parts of the rods near the ends of the warhead to lag behind those near the midsection. Discrete rods are bent and twisted, and continuous rods are broken as a result of the differences in velocity.

3-3.5 OTHER OUTPUT EFFECTS

3-3.5.1 UNDERWATER

The effects of an underwater explosion are separable into two distinct phenomena, the shock wave and the pulsation of the bubble. It is of interest to note that seventy to eighty percent of the heat of detonation can be accounted for in the sum of the energy of the shock wave and that of the movement of the bubble. The shock wave is characterized in terms of its peak pressure, energy, impulse, and time constant. These quantities may be computed from existing nomographs[28] as functions of distance and charge weight.

The pulsation and other movements of the bubble impart large quantities of momentum to surrounding water. Under some circumstances, the migration of the bubble due to hydrodynamic and gravitational effects can result in highly concentrated transfer of this momentum to ships or other structures so that the bubble action can outweigh that of the shock wave in its damaging effects. Bubble parameters may also be calculated conveniently with a nomogram. The behavior and actions of bubbles resulting from underwater explosions has been the subject of several studies[29].

3-3.5.2 UNDERGROUND

The effects of underground explosion are more difficult to characterize quantitatively than are those in air or water because soils and rocks are so much more variable in character and because disturbances are transmitted through them as stress waves with components of shear and sometimes tension in additon to the pressure that characterizes waves produced by explosions in fluids. The initial wave transmitted from an explosive charge to almost any solid medium is a true shock wave, and the pressures are far beyond the elastic limit. However, such shocks attenuate much faster than those in water because a large fraction of the energy is expended in shattering the medium. As the pressure approaches the compressive strength of the material, the shock is modified to a stress wave. It loses the sharp rise characteristic of a shock and may separate into several waves, elastic compression wave, plastic wave, surface wave, and a shear wave all propagated at different velocities.

Meanwhile, since soil and rock are usually variable in structure and density, waves are refracted and reflected in paths of various lengths. In addition, where the explosion occurs close enough to the surface to produce an air blast wave, this induces another surface wave. As a result of this wave, at a distance of a mile, the ground disturbance from a single explosion might continue for thirty seconds. At large distances, the disturbances induced by underground explosions have essentially the same characteristics as seismic waves produced by earthquakes. However, at shorter distances, the positive durations of stress waves are similar in magnitude to the exponential decay constants for underwater explosions of charges of similar size[30].

In addition to inducing shock, stress, and seismic waves, underground explosions displace the surrounding media. When close to the surface, they produce craters. Explosions too deep to burst through the surface produce spherical cavities known as camouflets. The products of the volume of a camouflet and the strength of the surrounding medium has been related to the heat of explosion of the charge which produces it.

3-3.5.3 SHAPED CHARGE

The lined shaped charge is one of the most effective means for the defeat of armor in terms of the ratio of thickness penetrated to diameter of round. Much information is available on the design of shaped charges[24,31]. Action of the shaped charge is sometimes referred to as the Munroe effect. Operation is as follows. At the detonation front, the metal liner is deflected inward. Converging symmetrically toward the centerline, the metal is deflected along this line. The slug of metal which accumulates at the center is squeezed by the continuing convergence to such high pressures that part of it emerges in a jet, like toothpaste from a tube.

Because the theory of shaped charges is based on a number of simplifying assumptions and because of unavoidable variations introduced during manufacture and loading, a large part of design and development of shaped charges has been empirical. The following rules of thumb on the design of shaped charges, are consistent with the theory although they might not be quantitatively predictable:

1. The optimum cone (included) angle, for most purposes, is about 42 deg.

2. Maxiumum penetration is obtained with a stand-off distance between charge and target of 2 to 6 cal.

3. The cone liner material that seems to have the best combination of properties is soft copper, although mild steel and aluminum have been used to advantage.

4. Optimum cone liner thickness is about 0.03 cal for copper.

5. Detonation pressure seems to be the most important property of an explosive affecting shaped charge performance.

6. In spin-stabilized projectiles, the centrifugal forces are sufficient to impair shaped charge performance significantly. This may be counter-balanced, at least to some extent, by use of fluted and trumpet shaped liners.

7. As the cone angle becomes larger, the velocity of the jet decreases and that of the slug increases. Shallow shaped charges in which the slug is the effective output are referred to as Misznay-Schardin charges. They are used extensively in land mines.

8. As the cone angle becomes smaller the velocity of the jet becomes higher and its mass becomes smaller until, for a tube, they approach infinity and zero, respectively.

9. Although penetrations by shaped charges in armor plate as high as 11 cal have been observed in the laboratory, the limit for practical ammunition is closer to four or five cone diameters.

For information on shaped charge scaling, see Ref. 32.

REFERENCES

a-k Lettered references are listed in the General References at the end of this handbook.

1. AMCP 706-180, Engineering Design Handbook, *Principles of Explosive Behavior.*

2. M. A. Cook, D. H. Pack, and W. A. Gey, "Deflagration to Detonation Transition in Solid and Liquid Explosives," Proc. Royal Society, Series A, **246,** 1245, 81 (1958).

3. N. A. Tolch, *Law of Similitude for Sympathetic Detonations,* BRL Report 385, Aberdeen Proving Ground, Md., 17 July 1943.

4. J. Savitt, *Investigation of Sympathetic Detonation and Evaluation* of *Structures for Ammunition Manufacture,* Final Report, Armour Research Foundation, Chicago, Ill. Contract DA-11-173-ORD-416, October 20, 1955.

5. W.M. Slie, *A Study of Output of Detonator Versus Internal Design Factors* of *Limited External Dimensions,* NAVORD Report 3593, Naval Ordnance Laboratory, Silver Spring, Md., 10 December 1953.

6. *Ultrasonic Inspection, Nondestructive Testing Inspection Handbook,* Quality Assurance Pamphlet AMCR 715-501, Watertown Arsenal, Watertown, Mass., 17 October 1960. (OBSOLETE)

7. E. H. Eyster, L. C. Smith, and S. R. Walton, *The Sensitivity of High Explosives to Pure Shocks,* Memo 10336, Naval Ordnance Laboratory, Silver Spring, Md., 14 July 1949.

8. *Sensitiveness of High Explosives,* Report OSRD 6629, (from Hercules Powder Co.) Office of Scientific Research and Development, March 1946.

9. L. D. Hampton, *Sensitivity and Pelleting Characteristics of Certain Desensitized RDX Mixtures,* NAVORD Report 4320, Naval Ordnance Laboratory, Silver Spring, Md., 25 June 1956.

10. S. Duck, G. W. Reynolds, and L. E. Starr, *Sensitivity of Explosives to Impact,* NAVORD Report 42 12, Naval Ordnance Laboratory, Silver Spring, Md., 1 May 1955 to 1 November 1955.

11. G. Svadeba, *Sensitivity of Explosives to Impact,* NAVORD Report 2940, Naval Ordnance Laboratory, Silver Spring, Md., 1 May 1953 to 1 July 1953.

12. J. N. Ayres, et al., *Varicomp, A Method for Determining Detonation-Transfer Probabilities,* NAVWEPS Report 7411, Naval Ordnance Laboratory, Silver Spring, Md., July 1961.

13. W. E. Dimmock, L. D. Hampton, and L. E. Starr, *Investigation of the Propagation of Detonation Between Small Confined Charges,* NAVORD Report 2385, Naval Ordnance Laboratory, Silver Spring, Md., 1, April 1952.

14 J. Smith, *Some Observations of the Growth of Detonation,* NAVORD Report 3753, Naval Ordnance Laboratory, Silver Spring, Md., August 25, 1954.

15 J. Savitt, *Effect of Acceptor Confinement Upon Acceptor Sensitivity,* NAVORD Report 2938, Naval Ordnance Laboratory, Silver Spring, Md., 13 November 1953.

6. J. Savitt, *Study of Parameters Affecting Fuze Explosive Train Performance,* Report 8, Armour Research Foundation, Chicago, Ill., Contract DA-1 1-022-501-ORD-2219, February 1957.

7. T. Orlow, E. Piacesi, and H. M. Sternbert, "A Computer Program for the Analysis of Transient Axially Symmetric Explosion and Shock Dynamics Problems", *Third Symposium on Detonation,* Report ACR-52, Office of Naval Research, Navy Dept., Vol. 1, September 26-28, 1959, pp. 226-40.

18. *Proceedings of Detonation Wave Shaping Conference,* Picatinny Arsenal, California Institute of Technology, Pasadena, California, 5-7 June 1956.

19. M. A. Cook, *Fundamental Principles of Wave Shaping,* Report TR 52, Utah University, Salt Lake City, Utah, Contract N7-ONR-45 107, August 1, 1956.

20. Robert W. Evans and D. K. Parks, *The Development of Equations for the Prediction of Explosive Effectiveness,* Report 8, Denver Research Institute, Contract DAI-23-072-501-ORD(P)-35, 15 March 1961 (AD-323 207).

21. S. D. Stein, *Effect of Confinement on Blast Performance of Explosives,* Report TR 2555, Picatinny Arsenal, Dover, N. J., November 1958.

22. R. W. Heinemann, R. W. Snook, and S. D. Stein, *The Effect of Casing Materials and Explosive Compositions on Blast,* Report DR-TR-1-60, Picatinny Arsenal, Ammunition Group, Dover, N.J., February 1961.

23. *Detonation of Cased Explosive Charges Inside F-47 Aircraft Aft Structures at a Simulated Altitude of 100,000 Feet,* Firing Record P-624 16, Aberdeen Proving Ground, Md., September 1956.

24. AMCP 706-245 (C), Engineering Design Handbook, *Ammunition Series, Design for Terminal Effects (U).*

25. AMCP 706-290 (C) Engineering Design Handbook, *Warheads – General (U).*

26. *Table of Initial Fragment Velocities Calculated from Sperui Formulas For Various Ratios and Explosive Energies,* NAVWEPS Report 7592, Naval Ordnance Test Station, China Lake, Calif., December 22, 1960.

27. R. Webster, D. Nathan, and G. Gaydos, *A Systems Effectiveness Analysis of the 105 mm M1 Shell Loaded with Five Explosives (U),* WASP Laboratory Report No. 53, Picatinny Arsenal, Dover, N. J. October 1970 (Confidential report).

28. E. A. Christian and E. M. Fisher, Eds., *Explosion Effects Data Sheets,* NAVORD Report 2986, Naval Ordnance Laboratory, Silver Spring, Md., 4 June 1955.

29. R. H. Cole, *Underwater Explosions,* Princeton University Press, N.J., 1948.

30. M. A. Cook, *The Science of High Explosives,* Reinhold Publishing Corp., N. Y., 1958, p. 83.

31. *Transactions of Symposium on Shaped Charges,* BRL Report 985, Aberdeen Proving Ground, Md., May 22-24, 1956.

32. O. A. Klamer, *Shaped Charge Scaling,* Report TM 1383, Picatinny Arsenal, Dover, N. J., March 1964.

33. AMCP 706-160 (S), Engineering Design Handbook, *Elements of Terminal Ballistics, Part One, Kill Mechanisms and Vulnerability (U).*

CHAPTER 4

ENVIRONMENTAL RESPONSE

4-1 MILITARY REQUIREMENTS

A military item must perform as intended after years of storage under conditions that may vary from tropical to arctic and from jungle to desert'. In the case of explosive materiel, the situation is aggravated first by the fact that explosives are of necessity metastable materials, and second by the irreversibility of their operation. While all military items are not subject to the same environmental conditions, the more common ones have been standardized and are listed in Table 4-1[2].

Thus, explosive material must endure operating temperatures of −50" to 125°F and storage temperatures of −70" to 160°F and remain operative. The Temperature and Humidity Test[J] tests over these temperatures. The most common hot surveillance or hot storage tests are conducted at 160°F. "Accelerated aging" tests are conducted at higher temperatures although interpretation of results is subject to question. Both bulk explosives and loaded items are subjected to hot storage, surveillance, or accelerated aging tests. After aging, materials may be weighed and analyzed to detect chemical decomposition or tested to determine changes in performance characteristics. Loaded items are sometimes dissected and their various components examined and analyzed. More often, they are tested functionally. Changes in functional characteristics may result from chemical deterioration of explosive or inert components, changes in state of aggregation (such as fusion and reconsolidation, sintering or redistribution of components of mixtures), or dimensional distortion.

In the course of their use, some explosive materiel is exposed to temperatures substantially higher than 160°F. Three common sources of such high temperatures are hot guns, heat transferred through metal parts from rocket motors, and aerodynamic heating. The hot gun problem, for the present, is somewhat simplified for the explosive charge designer because it is not difficult to find high explosives that are more temperature resistant than the propellants used in guns. Rocket propellants have flame temperatures far beyond that which any explosive can sustain so that the designer of rocket warheads must consider the heat transfer situation. As missiles are projected at higher velocities for longer times, the aerodynamic heating problem becomes more severe. At these higher temperatures, all effects are exaggerated and accelerated to a point where the deteriorations, which may take months or years in storage, may occur in minutes or seconds and the thermal decomposition of the explosive may become self-sustaining and run away to a thermal explosion. Such explosions are referred to as *cook-off.* In addition, the higher temperatures may cause damage of types which would never occur at lower temperatures.

In additon to temperature, explosives are subjected to other environments. One of these is the proximity with metals and other explosives that may be chemically incompatible.

In the course of military transportation, handling, and use, explosives and explosive charges are necessarily subjected to rather violent mechanical disturbances. From the viewpoint of analytical mechanics, the mani-

TABLE 4-1

ENVIRONMENTAL REQUIREMENTS FOR MILITARY MATERIEL

Condition	The Item Must Withstand:
Operating temperature	Temperatures ranging from an air temperature of 125°F (ground temperature of 145°F) in hot-dry climates to an air temperature of – 50°F (ground temperature of – 65°F) in cold climates. Temperatures can drop to – 80°F in bomb bays of high flying aircraft, and aerodynamic heating can raise the temperature of missiles launched from high speed planes above 145°F.
Storage temperature	Storage temperatures from – 70" to 160°F and be operable after removal from storage.
Humidity	Relative humidities up to 100%.
Rain	A rain storm and function as intended.
Water	In certain instances, water penetration, be waterproof, showing no leakage, and be safe and operable after immersion in water at 70" ± 10°F under a gage pressure of 15 ± 5 psi for 1 hr.
Rough treatment	The rigors of transportation (including perhaps parachute delivery), and rough handling.
Fungus	Fungus growth.
Surveillance	Storage in a sealed can for 10 yr (20 yr are desired) and remain safe and operable.

festations of these disturbances are compression, tension, and shear of the explosive which must be specified in time-dependent terms. However, problems associated with such disturbances are not usually considered in such terms. The usual approach is that of attempting to simulate conditions that may be experienced by explosive charges in service under quantitatively controlled conditions and in circumstances where behavior can be observed. Considered in these terms, the disturbances to which explosives may be subjected can be categorized as impact, acceleration, vibration, and friction.

The relative sensitivities of common military explosives according to standard laboratory tests are given in Table 4-2[d] while sensitivities to hazards of use are tabulated in Table 4-3[d]. For details of test procedures, see par. 12-2.1.

4-2 TEMPERATURE

4-2.1 HIGH TEMPERATURE STORAGE

4-2.1.1 CHEMICAL DECOMPOSITION

As indicated by the Arrhenius equation (Eq. 2-2), explosives are decomposing all the time. An important basis for the selection of military high explosives is the slow rate of this decomposition at storage temperatures. The Vacuum Stability Test[j] is the criterion of thermal stability which is used most frequently to predict storage life on an explosive.

Samples of TNT and tetryl, analyzed after storage for twenty years, showed no detectable chemical deterioration'. Assume an activation energy of 33,000 cal/mol and 1.0 cm^3 gas evolved in 40 hr at 120°C as the vacuum stability of tetryl; Eq. 2-2 extrap-

TABLE 4-2

RELATIVE SENSITIVITIES OF EXPLOSIVES ACCORDING TO STANDARD LABORATORY TESTS OF GROUND SAMPLES

	Impact Tests		Friction Tests		Bu Mines Static Elec. Tests'					50% Det. Sensitivity, 100-g Tetryl Booster	
Explosive	Picatinny Arsenal in.[a]	Bureau of Mines cm	Picatinny[b] (Steel Shoe) —	Hercules (4kg added) —	(Unconf.) Joule	(Confined) Joule	Explosion Temperature-5 sec. (Cook-off) °C	Min. Det. Chg. Lead Azide g	Wax Gap in.	Density g/cm³	Vacuum Stabil 40 hr, 120°C cm³
Amatol, 50/50	16(17)	95	U	–	–	–	265d	0.20	0.60	1.55	1.0
Baratol	11(24)	35	–	–	–	–	385[i]	0.20	0.32	2.55	–
Black Powder	16(16)	32	S	–	>12.5	0.8	427[i]	–	–	–	–
Composition A-3	16(17)	–	U	–	–	–	250[d]	0.25	1.70	1.62	0.6
Composition B	14(19)	–	U	38	–	–	278[d]	0.20	1.40	1.69	0.9
Composition C-3	14(33)	–	U	–	–	–	280[d]	0.20	1.36	1.62	1.21[e]
Composition C-4	19(27)	–	U	–	–	–	290	0.20	–	–	0.26[e]
Cyclonite (RDX)	8(18)	100+	E	25	–	–	260[d]	0.05	–	–	0.9
Cyclotol, 70/30	14(20)	75	U	–	–	–	265[d]	0.20	–	–	0.86
Cyclotol, 60/40	14(19)	100+	U	–	–	–	280[d]	0.20	–	–	0.29
Explosive D (Ammonium Picrate)	17(18)	100+	U	–	0.025	6.0	318[d]	0.20	1.27	1.54	0.4
Haleite (EDNA)	14(17)	32	U	27	–	–	189[d]	0.13	2.09	1.42	1.5
beta-HMX	9(23)	60	E	–	–	–	327	0.30	–	–	0.45
Lead Azide (pure)	3(30)	75	E	–	0.007	0.007	340	–	–	–	–
Lead Styphnate	8(22)	–	E	–	0.0009	0.0009	282	0.001	–	–	0.3
Minol-2[f]	13	35	U	–	–	–	435[i]	–	–	–	2.1
Nitroguanidine	26(7)	48	–	–	–	–	275[d]	0.20	0.67	1.41	0.44
Octol, 75/25	17(25)	–	U	–	–	–	350	0.30	–	–	0.39
Pentolite, 50/50	12(15)	34	U	19	–	–	220[d]	0.13	2.08	1.65	3.0[e]
PETN	6(16)	–	C	11	0.06	0.21	225[d]	0.03	3 g	1.6	0.5[e]
Picratol, 52/48	17(19)	17	U	–	–	–	285[d]	0.20	1.00	1.63	0.68
Picric Acid	13(17)	100+	–	–	–	–	320[d]	0.24	2 g	1.7	0.5
Tetryl	8(18)	26	C	26	0.007	0.44	257[i]	0.10	2.01	1.58	1.0
Tetrytol, 70/30	11(18)	28	U	–	–	–	320[i]	0.22	1.66	1.66	3.2[e]
TNT	14-15(17)	95+	U	–	0.06	0.44	475[d]	0.27	0.82	1.60	0.23
Torpex	9(15)	42	–	14	–	–	260[d]	–	–	–	1.0
Tritonal, 80/20	13(16)	85	U	–	–	–	470[d]	0.20	–	–	0.2

[a] Figures in parentheses are sample weights in milligrams
[b] E Explodes; C Crackles; S Snaps; U Unaffected
[c] Ref. 3
[d] Decomposes
[e] At 100°C, value at 120°C is > 11
[f] Ref. 4
[i] ignites

TABLE 4-3

SENSITIVITY OF EXPLOSIVES TO HAZARDS OF USE

Explosive	100 kg Drop Test[a] 10% Firing: Height, ft	Cast Density, g/cm³	60 mm Proj. Against Armor, ft/sec	T7 Bomb 'Max Safe Drop, ft	Setback[b] Critical Pressure, k psi	Rifle Bullet Test (Approx. percentage): E	P	B	U
Composition A-3	3.1	1.64[p]	–	–	–	0	0	0	100
Composition B	3.1	1.65	209	–	87.5	3	13	4	80
Composition C-3	–	–	–	–	–	0	40	0	60
Composition C-4	–	–	–	–	–	0	0	20	80
Cyclonite (RDX)	–	–	–	–	–	100	–	–	–
Cyclotol, 70/30	–	–	–	–	–	30	30	0	40
Cyclotol, 60/40	–	–	–	–	76.6	5	55	25	15
Explosive D (Ammonium Picrate)	–	–	–	–	–	–	–	30	70
Octol, 75/25	–	1.81	–	–	82.0	70	–	–	30
Pentolite, 50/50	1.5	1.59	170	–	–	72	20	–	8
PETN	–	–	–	–	–	100	–	–	–
Picratol, 52/48	7.1	1.50	–	10,000	–	–	–	40	60
Tetryl	2.8	1.57[p]	–	–	–	13	54	10	23
Tetrytol, 70/30	–	–	–	–	–	0	55	0	45
TNT	6.5	1.54	1100	5,000	86.0	40	–	–	60
Torpex	–	–	–	–	–	20	80	–	–
Tritonal, 80/20	3.8	1.67	509[c]	–	87.0	60	–	–	40

[a]Ref. 5
[b]Ref. 6
[c]100-micron aluminum
[p]Pressed, 10,000 psi

E Exploded
P Partially Exploded
B Burned
U Unaffected

olates to predict less than one percent decomposition in twenty years at 160°F. Most military explosives have vacuum stabilities at least as good as tetryl. The storage characteristics of PETN, although worse than those of most military high explosives, are not so bad as to outweigh its desirable properties for certain applications.

A very effective means for achieving long-term chemical stability is to develop new, high-temperature explosives. For some applications, such as the space program, it is the only choice. Recent efforts in this direction have produced hexanitrostilbene, **HNS,** (melting point of 600°F) and diaminohexanitrobiphenyl, DIPAM, (melting point of 580°F). Both have good stability when placed in a vacuum at 500°F for extended periods of time[8]

4-2.1.2 DIMENSIONAL CHANGE

Explosives, in general, have larger thermal coefficients of expansion than the metals in which they are usually loaded. This results in the expansion of the explosive charge and the exertion of a force of significant magnitude on the explosive container when stored for long periods at high temperatures. Under some circumstances, the pressure developed by this expansion is enough to bulge bulkheads or covers.

Some wave shaping systems (see par. **3-3.2**) involve the use of air spaces within or adjacent to explosive charges. At elevated temperatures, the gravitational forces are sufficient to induce creep at a rate such that the configuration, which is so critical in such applications, is modified within days to a point where the wave shaping effects are lost.

Materials, like Composition B, cyclotol, and Minol-2 which contain large percentages of TNT, are particularly susceptible to such distortion because the high storage temperatures are so close to their melting points. Temperature cycling causes such materials to "grow". The growing is a permanent expansion which is caused by the opening of. microscopic cracks due to thermal gradient stresses and the bridging of these cracks by fusion and refreezing of multiple component eutectics.

In general, plastic bonded explosives have better dimensional stability at high temperatures than castable materials. The dimensional stabilities of the resin binders of such materials provide reasonable clues regarding those of the mixtures.

4-2.1.3 EXPLOSIVE PROPERTY CHANGE

Some explosive properties, especially those associated with initiation and growth of detonation (see pars. 2-2 and **2-3),** are determined by the state of aggregation of an explosive as much as by its composition. Prolonged storage of an explosive at temperatures near its melting point can result in changes of structure and, in the case of mixtures, segregation of components.

Similarly, a bare tetryl booster in an unlined cavity in Composition B, or other TNT base material, may be desensitized by exudation of the TNT[g]. The fuzing system may not be adequate for the initiation of a desensitized tetryl booster pellet. **A** similar problem would exist if bare RDX and HMX boosters had been used.

4-2.1.4 EXUDATION

Usually TNT contains a group of impurities that can form very low melting multiple component eutectics. Much of the TNT used during World War I contained large enough fractions of such components that they exuded from the surfaces of charges. The exudate, which was an explosive and which could appear in unintended places, presented a hazard. TNT made in accordance with present specifications (set point 80.2°C) does exude at 160°F[d]. Pentolite, which has an eutectic of 170°F and tetrytol, eutectic 153°F, have greater tendencies to exude. Tetrytol exudes at 149°F. Composition B, which has an eutectic at **174°F** exudes slightly at 160°F.

During a study designed to prevent exudation, it was found that the addition of a small amount of calcium silicate* to charges containing TNT will keep exudation under satisfactory control[10]. While the exudation is controlled, the addition of the calcium silicate renders the explosive charge more brittle and prone to the development of cracks. The degree of increased hazard that this addition may cause has not yet been determined.

4-2.1.5 EFFECTS IN INITIATORS

The performance of initiators is determined as much by spatial configuration and the properties of inert components as by those of the explosive materials.

Bridgewires of electric initiators may be broken by the tension resulting from the thermal expansion of the plastic plugs that are often used in such items. Such failures have been observed[11]. In a test of a wirebridge initiator, substantially increased firing times after hot storage and temperature-humidity cycling were noted. Since the basic lead styphnate charge used is one of the most stable explosives known and is certainly well

*For example, Microcell E, registered trade name of Johns-Manville.

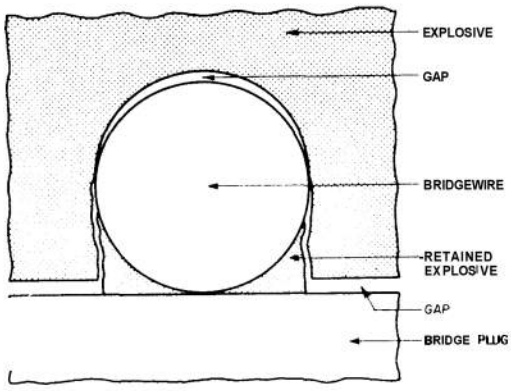

Figure 4-1. Postulated Condition for Initiator Failure Caused by Wire-explosive Separation

below any softening or phase transition point at 160°F, these changes in functioning time must be attributed to mechanical distortions. One such distortion, which may be visualized, is the compression of the explosive as a result of the difference in expansion coefficients of metal case and its plastic and explosive contents. When the initiator is returned to normal room temperature, the plastic and the explosive contract and a separation of bridgewire and explosive may result as shown in Fig. 4-1.

No systematic basis exists for the prediction or prevention of such deterioration of initiators. Hence, thorough testing in high temperature surveillance and cycling tests are indicated.

4-2.2 COOK-OFF

4-2.2.1 THRESHOLD CONDITIONS

Cook-off is the deflagration or detonation of explosive material by the absorption of heat from its environment. Usually it consists of the accidental and spontaneous discharge of ammunition or explosion in a gun or firearm caused by an overheated chamber or barrel igniting a fuze, propellant charge, or bursting charge. The cook-off temperature is that temperature to which a given quantity of explosive must be heated to obtain its ignition. As a condition that cook-off occur in any small volume element in the explosive, thermal energy supplied from an outside source and from chemical reaction must exceed energy losses by conduction and radiation. Ignition occurs as some temperature dependent upon the heating rate. Of all explosive processes of practical interest, cook-off is the most nearly ideal manifestation of the thermal explosion described in par. 2-1.1.

When an explosive charge is exposed to a high temperature environment, its temperature rises eventually above that of the surroundings. The temperature attained in the interior of the charge is enough higher than that of the surroundings so that the heat liberated by the reaction is carried off. Since the reaction rate is an exponential function of temperature, Eq. 2-2, a given increase in the temperature of the surroundings causes a larger than proportional increase of the temperature of the interior. A point is reached where equilibrium cannot be maintained. This temperature, referred to as the cook-off temperature, is not a constant property of an explosive but a property of a system that varies with charge size. thermal properties of surroundings, and time of exposure.

For any given environmental temperature, the interior equilibrium temperature increases with the size of the charge because heat flow depends upon a temperature gradient, and even the same gradient over a longer distance should give a higher temperature (but more heat is liberated per unit area in a large charge so that the gradient is steeper). Thus, the surface temperature that will result in a thermal explosion, the cook-off temperature, decreases as the size of a charge is increased. As a general rule of thumb, cook-off temperature is decreased about 100°F for each ten-fold increase in charge diamenter.

The use of thermal insulation, of course,

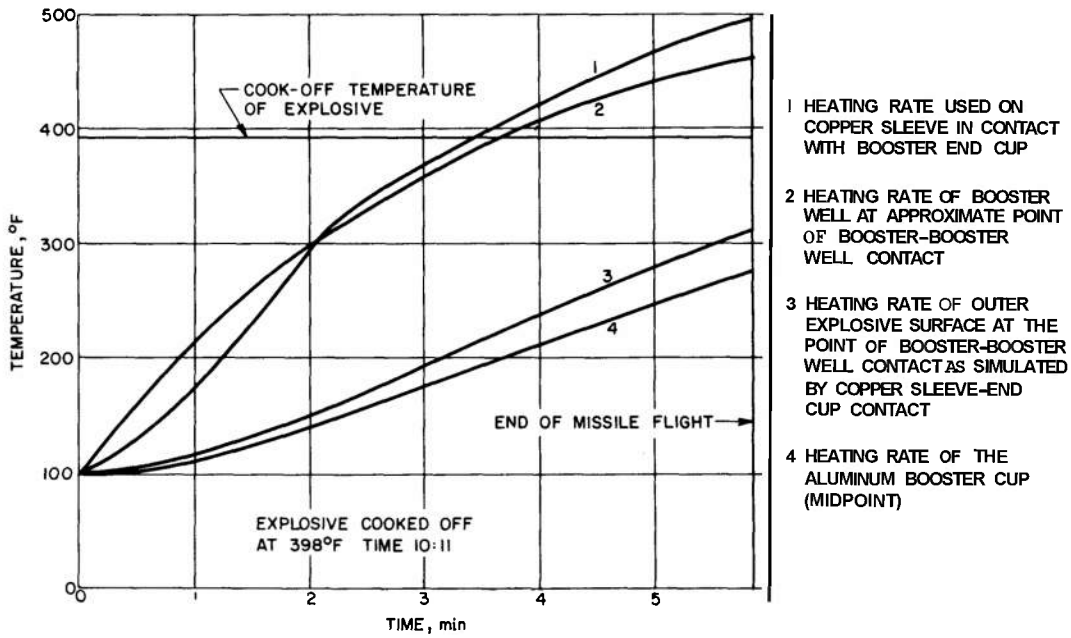

Figure 4-2. Test of a Booster in Simulated Missile Flight

retards the penetration of heat into an explosive charge and thus may forestall cook-off where the time of exposure is limited. However, since it also retards the dissipation of the heat evolved in the reaction, it tends to reduce the temperature that will result in eventual cook-off. Decisions regarding the use of insulation must be based on the type of exposure anticipated. The probability of cook-off is reduced by insulation of charges that are to be exposed for relatively short times to temperatures well above the cook-off temperatures. Charges to be exposed to marginal temperatures for times long enough to approach thermal equilibrium are more subject to cook-off if insulated than if not.

Under usual conditions, exposure to elevated temperature is for relatively short periods. Frequently a charge is detonated purposely after exposure to high temperatures for a few minutes. Under such circumstances, the environment to which the packaged explosive charge is exposed may be well above the cook-off temperature of the charge, but the explosive may be detonated before it reaches a dangerous temperature. Fig. 4-2[12], a plot of experimental data, illustrates a case where the explosive reaches the cook-off temperature after the end of expected life. Such situations may be predicted using conventional heat transfer analysis techniques, although experimental verification is necessary. Cook-off temperatures of common military explosives are listed in Table **4-2.**

4-2.2.2 COOK-OFF EXPERIMENTS

The complications of heat flow, phase changes, and reaction kinetics as applied to military explosive charges in service situations have driven many to the conclusion that the probability of cook-off can be assessed only by direct experiment. Tests using complete ammunition under service conditions is usually too expensive. Unless a charge is instrumented, such experiments can yield no more than a yes or no answer as to whether and when cook-off occurred under the particular conditions. Instrumentation of a missile or projectile involves telemetering, adding to the expense. The compromise that has been

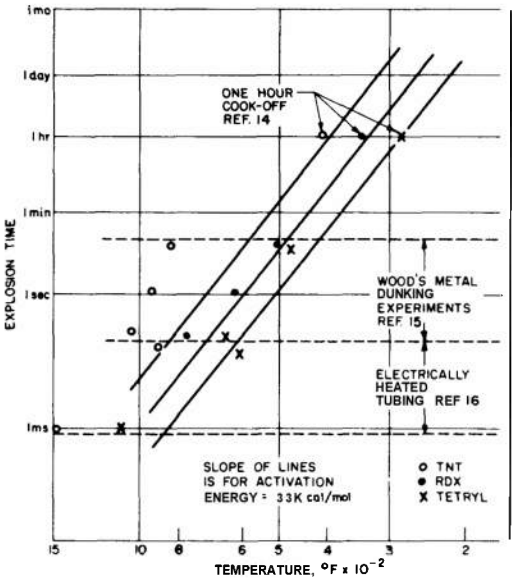

Figure 4-3. Cook-off Characteristics of Three Explosives

reached most often is that of simulating the thermal conditions of use as closely as is possible in static tests using live ammunition, modified only to the extent necessary for the installation of thermocouples (see par. 12-2.1.2.9).

Typical of the many cook-off experiments is one which was conducted to measure the cook-off temperature of the M47 Stab Detonator and to determine if this temperature could be raised by modifying its constituents. The M47, containing NOL 130 primer mix, an intermediate charge of lead azide, and a base charge of RDX, when heated in an oven, cooked off at 369°F (see Table 4-14[13]). Seven additional charge combinations were tested. The highest cook-off temperature for a complete detonator (all three charges) was 415°F.

The cook-off characteristics of TNT, RDX, and tetryl are plotted in Fig. 4-3. The curves are the composites of three separate experiments that show remarkably close agreement. Data were obtained in an oven; a Wood's metal bath, and in electrically heated tubing. Other experiments show that the cook-off threshold of military explosives is in the range of 350" to 450°F[7,18].

4-2.2.3 SIMULATION OF AERODYNAMIC HEATING

Temperature and other factors associated with aerodynamic testing are discussed in par. 1-2.1.2. In some missile applications, the stagnation temperature, **Eq.** 1-2, is well above the cook-off temperature of any known explosive, and the heating rate is limited mainly by the surface coefficient of heat transfer between air and missile. Such a situation is closely simulated by the use of a heating element of constant power in close thermal contact with the container of a charge. Data obtained in such an experiment are given in Fig. 4-4[14].

4-2.3 OTHER EFFECTS OF HIGH TEMPERATURE USE

4-2.3.1 MELTING OF EXPLOSIVES

The fact that an explosive charge reaches its target before cooking off is no guarantee that it is in the same condition as that in which it was launched. All of the effects of high temperature storage are exaggerated and accelerated at the higher temperatures which sometimes result from aerodynamic heating, etc. In addition, some effects that are negligible or nonexistent at 160°F may become important at higher temperatures.

The castable explosives in common military use are based on TNT as a vehicle. TNT melts at 178°F but most of the commonly used mixtures melt at slightly lower temperatures. One effect of the melting of TNT is the "thermal buffering" (heat of fusion) that prevents the temperature from rising above the melting point until it is completely melted. This effect may keep a tetryl booster, surrounded by TNT or a TNT mixture well

TABLE 4-4

COOK-OFF TESTS OF STANDARD AND MODIFIED M47 DETONATORS

Group Designation	Upper Charge Explosive	Upper Charge Wt, mg	Intermediate Charge Explosive	Intermediate Charge Wt, mg	Base Charge Explosive	Base Charge Wt, mg	Cook-Off Temp, °F
Standard	NOL 130 primer mix	13	Dextrinated lead azide	105	RDX	34	369
PAX-7	Dextrinated lead azide	115	RDX	40	RDX	40	370
PAX-9	NOL 130 primer mix	13	Dextrinated lead azide	105	Inert[a]	40	535
PAX-8	Inert[a]	10	Dextrinated lead azide	105	HMX[d]	36	435
PAX-11	NOL 130 primer mix	13	Dextrinated lead azide	105	HMX[b]	34	415
PAX-12	NOL 130 primer mix	13	Dextrinated lead azide	105	HMX[c]	34	405
DEX	Inert[a]	8	Dextrinated lead azide	105	Inert[a]	36	520
HMX	Inert[a]	10	Inert[a]	66	HMX[c]	34	460

[a] Inert charges consisted of CP grade sodium chloride.
[b] HMX, recrystallized, Lot PAE-E-23224, 2.5% RDX, max.
[c] HMX, recrystallized, Lot unknown, 2.5% RDX, max.
[d] HMX, laboratory recrystallized, Lot unknown, 2.5% RDX, max.

below its cook-off temperature until a weapon reaches its target.

Most effects of melting are somewhat less beneficial. Wave shaping systems, which depend upon accurate retention of charge configuration, may lose all of their effectiveness whith relatively slight distortion. The segregation of the components of mixtures such as HBX can result in serious changes in explosive properties. A region in which the RDX concentration is much higher may be appreciably more sensitive than the original mixture. A hazard associated with the melting of explosives is the possibility that the material will work its way into unintended locations.

In considering the effects of charge melting in use, a certain amount of common sense is necessary. A warhead full of molten explosive may be intolerable but a little melting at the corners might have no ill effect in some applications. Estimates of the quantity or degree of melting and the location at which it is anticipated should be considered in terms of tlleir consequences.

4-2.3.2 SENSITIZATION

As pointed out in par. 2-3.2, the initiation process is usually thermal. With increasing temperature, less additional temperature rise is needed to induce a self-propagating reaction. In other words, explosives tend to become more sensitive as they are heated. However, the effect is rather small until the cook-off temperature is approached. Impact data are available for TNT at various temperatures as listed in Table 4-5[19]. Note that there is a sharp increase in sensitivity at the set point (80.2°C).

TABLE 4-5

TNT IMPACT SENSITIVITY VARIATION WITH TEMPERATURE

Temperature, °C	50% Point, in.
30	23.6
50	22.0
70	17.0
75	14.2
85	4.73
90	5.12
110	3.54
130	3.15

Another effect is that of solid-solid phase transitions. An example of one explosive in common use is HMX which exhibits a marked

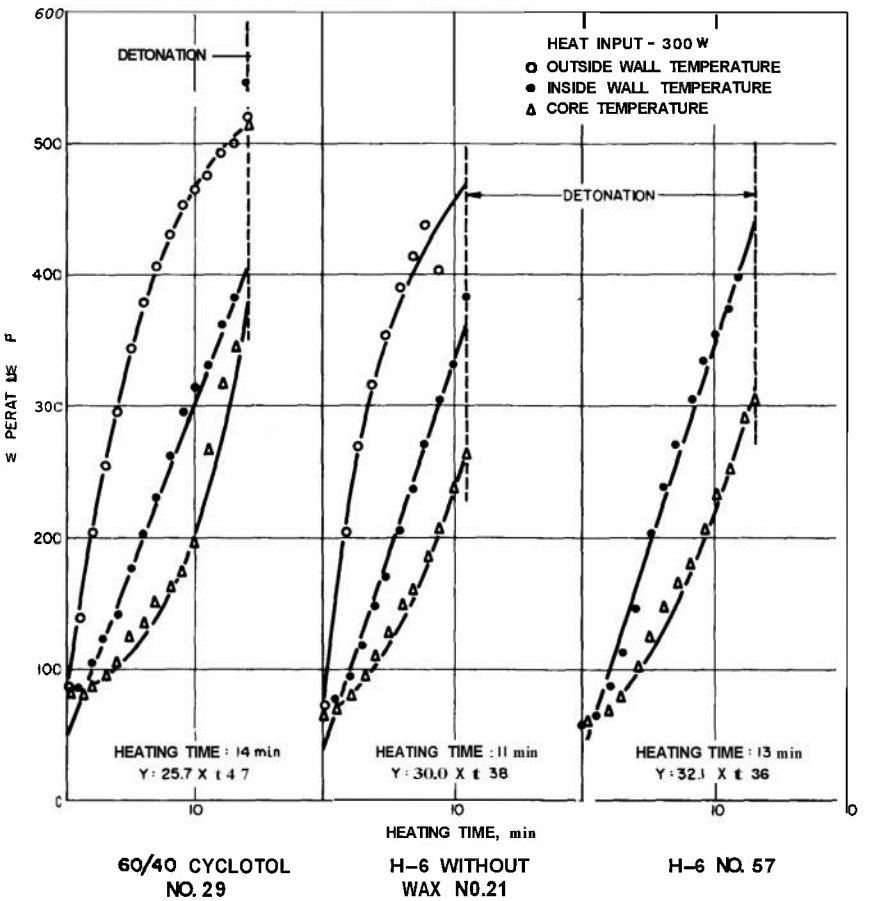

Figure 4-4. Simulated Aerodynamic Heat Test

change in sensitivity attributable to this cause[14]. However, because most projectiles and missiles are on their way to their targets before they are subjected to aerodynamic heating, this type of sensitization may be of more importance in reducing effectiveness due to deflagration on impact and similar defective operation than in contributing to the hazards of use. It might contribute to the hazards associated with the hangfires in hot guns and externally mounted weapons on high performance aircraft.

4-2.4 LOW TEMPERATURE STORAGE AND USE

Most deteriorative processes are slowed at low temperatures. Hence, low temperature storage is usually less harmful than storage at normal atmospheric or elevated temperature. Rapid heating after low temperature storage can induce thermal stresses that may have more than usual tendencies to crack some sealing materials which become brittle at low temperatures. Ammunition that depends upon organic seals to protect moisture sensitive materials should be subjected to the temperature-humidity test[J].

Burning, and the initiation, growth, and propagation of explosion are often retarded or prevented by very low temperatures. Tests of blasting caps at liquid nitrogen temperatures showed much decreased sensitivity.

The effect of low temperatures upon the sensitivities of initiators is usually quite small because the change from room temperature is only a fraction of the rise associated with initiation. However, systems that are marginal with respect to growth or propagation of explosive reaction will usually fail in the low temperature test.

Interestingly enough, the most noticeable effect of low temperature upon stable detonation results from the shrinkage in volume. Because of the higher density at low temperatures, detonation velocities and consequently detonation pressures are higher. The increases, of course, are too small to have practical significance. Where propagation time is critical and must be synchronized with a process that is independent of temperature, this effect, now accentuated by reduction in distance, can be a source of difficulty[20].

4-3 ENVIRONMENT

4-3.1 CHEMICAL INTERACTIONS

Table 4-6 gives the compatibilities of explosives with common metals used in military construction. More complete data regarding reactions of explosives with metals have been compiled in several studies[21,22].

Of the reactions of explosives with metals, that of lead azide with copper deserves special comment. Although this reaction is relatively slow, even in the presence of moisture, some forms of copper azide are so sensitive as to create a serious hazard even in minute quantities, particularly when in contact with lead azide. For this reason, containers of aluminum and stainless steel are now used exclusively. Picatinny Arsenal requires that all new fuzes be designed to contain no copper or copper alloys, with the possible exception of the electrical system; even here the copper must be coated for protection against the formation of hydrozoic acid[23]. Another prohibition is the use of lead thiocyanate in contact with aluminum.

The compatibility of explosives with a large number of plastics has also been studied[24-27]. It was shown that the following types of plastic have negligible effect on explosives and are themselves unaffected: acrylates, cellulosics, ethylenes, fluorocarbons, nylon, properly cured unmodified phenolics, and silicones.

An important class of explosive materials is that of mixtures of fuels and oxidants. Both fuels and oxidants are added to explosive compounds like TNT. Examples are tritonal, TNT/Al (80/20); amatols, TNT/NH_4NO_3 (20-80/80-20); and Minol-2, TNT/NH_4NO_3/Al (40/40/20). Although the compounding of explosive mixtures is beyond the scope of this handbook, a few remarks regarding the reactions of some of the oxidants may be useful as a guide to designers who specify mixtures containing them.

Many of the oxidants used are nitrates, chlorates, and perchlorates. Water solutions containing these ions are highly corrosive to metals. The alkaline metal salts, with the help of a little moisture, will pit aluminum quickly. The trend away from potassium chlorate in priming mixes is part of the effort to reduce corrosion in gun barrels. Where explosives are used that contain metallic nitrates, chlorates, or perchlorates in contact with metals, particular attention should be given the exclusion of moisture.

In delay compositions, these corrosion problems have resulted in widespread use of chromates that, in addition to being insoluble, tend to inhibit corrosion.

Mixture containing chlorates and perchlorates in combination with organic materials tend to be quite sensitive. There has been a general reluctance to use such mixtures except as primary explosives. Exceptions have been ammonium perchlorate, potassium perchlorates, and chlorates in composite propellants. smoke compositions, igniter compositions, and special applications such as piston motors.

TABLE 4-6

COMPATIBILITY OF COMMON EXPLOSIVES AND METALS

	Lead Azide	Lead Styphnate	PETN	RDX	Tetryl
Magnesium	N		B N S		
Aluminum	A N	A N	A N VS	A N VS	A N
Zinc	C N			A	B VS
Iron	N			A	B S
Steel	C N		B N VS	A VS S	C H
Tin	A N			A	A N
Cadmium	C				A
Copper	D N	A	B N VS	A S S	A N
Nickel	C			A	A N
Lead	N			A	A N
Cadmium plated steel			B N S	VS VS	A N
Copper plated steel	N		B N VS	B VS VS	A VS
Nickel plated steel	N		B N VS	A N S	A N
Zinc plated steel	N		B N VS	A N S	A N
Tin plated steel	N			A	B VS
Magnesium aluminum	VS		B N S		
Monel Metal	C N				
Brass	D N		B N S	A S S	B VS
Bronze	N			A	A VS
18-8 stainless steel	A N	A	A N N	A N N	A N
Titanium	N			N	N
Silver	N			N	N

CODE

A no reaction
B slight reaction
C reacts readily
D reacts to form sensitive materials
H heavy corrosion of metals
VS very slight corrosion of metals
S slight corrosion of metals
N no corrosion

4-3.2 SIMULATION OF IMPACT

4-3.2.1 LABORATORY IMPACT TESTS

The objection to the laboratory impact tests described in par. 2-3.3.1 is that the explosive sample does not simulate those in actual use. Hence, a standard machine was adapted to the testing of pressed and cast military explosives by the use of modified tools in which 1 x 1 in. cylindrical pellets are cast or pressed directly[4]. The data are given in Table 4-3. Other impact tests are described in par. 12-2.1.2.1.

4-3.2.2 BULLET IMPACT

The standard bullet impact test consists of shooting at a capped pipe nipple, loaded with the explosive to be tested, with a cal .30 rifle bullet fired from 90 ft. The test is described in par. 12-2.1.2.3 and data obtained are given in Table 4-3. Some of the uncontrolled variables have been eliminated by the use of a

TABLE 4-7

BULLET SENSITIVITY OF 50/50 PENTOLITE

Column Length, in.	Plate Thickness, in.	Avg Chg Density, g/cm^3	Observed Effects*				
			Unaffected	Smoke	Burning	Detonation Partial	Detonation Complete
1	0.146	1.68	0	10	0	0	0
1	0.250	1.66	0	9	1	0	0
1	0.375	1.69	1	2	7	0	0
2	0.146	1.58	0	0	3	6	0
2	0.250	1.67	0	0	0	9	1
2	0.375	1.63	1	1	0	4	4
3	0.146	1.62	0	0	3	7	0
3	0.250	1.63	0	0	0	6	4
3	0.375	1.65	0	0	0	2	8

'Sample size = 10

test bomb with flat target surfaces in which both thickness of the target plates and explosive column length may be varied conveniently. Some of the effects of such variations are shown in .Table 4-7[28]. Note that the sensitivity increases both with plate thickness and charge length.

In the bullet impact tests of other explosives, both aluminum and steel target plates were used in thicknesses ranging from 1/32 to 3/16 in. Most of the explosive specimens were 3-in. long, but 4-, 5-, and 6-in. columns were also tested. To the extent that it was significant, the effect of charge length was varied with the explosive and with the criterion used to determine whether or not a charge was initiated. The general trend toward more frequent and vigorous reaction with increasing target plate thickness, as noted in Table 4-6, seemed to apply to most explosives tested. Initiation was also more frequent with steel plates than aluminum. These effects of plate material and thickness were referred to as confinement effects.

Another interpretation is that the heavier plates serve as more effective anvils for the initiation of the explosives by squeezing or pinching as the explosive approaches the back plate. One aspect of this interpretation, that initiation sometimes occurs as the projectile approaches the rear plate, was the subject of another investigation' [9]

4-3.2.3 MASS IMPACT

In the course of use, military explosive charges are often brought to rest from high velocities by impact. Whether the impact is intentional or accidental, it is usually undesirable for an explosion to result. Explosion due to target impact is usually deflagration, low order detonation or, if high order, it starts from the wrong place or at the wrong time. The undesirability of explosion of accidentally dropped or jettisoned charges is obvious.

The armor plate impact test and bomb drop test, which are described in par. 12-2.1.2.7 and data from which are given in Table 4-3, are direct tests under particular sets of service conditions. Clearly, the velocity or drop height that will result in an explosion can be expected to vary substantially with such factors as the design and striking attitude of the ammunition and the nature of the surface it strikes.

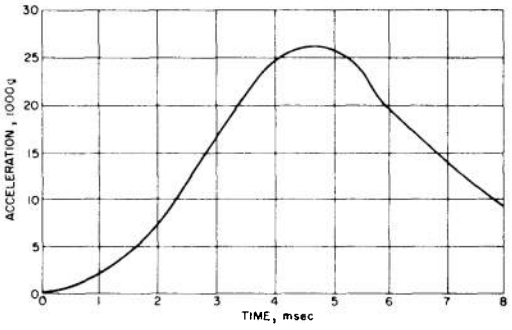

Figure 4-5. Typical Time-acceleration Curve for Projectile While in Gun

4-3.3 SETBACK ACCELERATION

4-3.3.1 THE OCCURRENCE OF SETBACK

Setback is the relative rearward force of component parts in a projectile. missile, or fuze undergoing forward acceleration during its firing or launching. This tendency to move is caused by the setback force, the rearward force of inertia that is created by the forward acceleration of the projectile or missile. The force is directly proportional to the acceleration and mass of the parts being accelerated.

Table 1-2 lists some typical magnitudes of acceleration to which weapons are subjected in the course of their use. More specific data are usually available to the designer of components for a particular application. Effects of these accelerations on inert components may be computed by conventional applied mechanics'!. Failure of mechanical components as a result of accelerztion-induced stresses may, of course, result in the application of impact of sufficient magnitude to initiate an explosive charge. Some types of explosive charge, including shaped charges for example, are strongly dependent upon both configuration and point of initiation for their effectiveness. The explosive material is part of the structure which maintains such configuration.

Typical setback accelerations experienced by projectiles are of the order of 30,000 times that of gravity[30]. The acceleration increases from zero to its maximum value (see Fig. **4-5)** in a few milliseconds.

In addition to this very specific acceleration that causes setback, there are several other accelerations of similar magnitude to which this discussion applies. The axial force in the direction opposite to setback has been designated as *setforward*. It is the forward force of inertia that is created when a projectile, missile, or bomb decelerates. Deceleration occurs on water entry and target impact. Setforward also occurs when projectiles are rammed into an automatic weapon. Present point-detonating, time, and proximity fuzes will withstand about 1000 g setforward. While weapon designers would like to double or triple the ram velocity, present fuzes cannot survive this forces.

A sideways acceleration occurs because of the practical inability to'acliieve perfect alignment between projectile and gun axis prior to firing. Therefore, upon firing, a sideways force results as the projectile aligns itself with the bore. For example, the 175 mm field gun and the 120 mm tank gun have such high lateral forces that fuze ogives have broken off. Hence, special fuzes had to be provided. These forces have not been measured or calculated to date. In air-gun and drop tests, damage was simulated by accelerations greater than 10,000 g. Worn gun tubes also produce greater than normal sideways acceleration; the word describing this motion is balloting.

The apparatus for the measurement of the sensitivity of explosives to initiation by rapidly rising pressure -such as that due to setback—is described in par. 12-2.1.2.6. Setback sensitivity data so obtained for various explosives are listed in Table 4-3.

4-3.3.2 THE SETBACK MECHANISM

The duration of the setback acceleration period is long compared with the transit time for a compression wave in the material, but

short compared with the time required for significant heat transfer. Thus the compression that results may be considered to be essentially adiabatic. As soon as the physical mechanism of setback is understood to be adiabatic compression, it becomes clear how explosives can be initiated by setback. Hot spots are caused by the adiabatic compression of minute air spaces within the explosive.

The adiabatic compression of the air results in a build-up of high temperatures. The temperatures reached can be approximated by treating the air as an ideal gas

$$\frac{T_2}{T_1} = \left(\frac{P_2}{P_1}\right)^{(\gamma - 1)/\gamma} \qquad (4\text{-}1)$$

where

T_2 = final temperature, °K

T_1 = initial temperature, °K

P_2 = final pressure, psi

P_1 = initial pressure, psi

γ = ratio of specific heats, dimensionless (1.4 for air)

Even at comparatively low setback pressures, some of the temperatures so calculated are considerably above the 5-sec explosion temperature of common explosives, see Table 4-8[5].

While the temperature reached by the compressed air is high, the total heat available in the thin layer of compressed air is minute. Hence, a minimum base separation must be present at any given pressure to initiate an explosive. The separation of the charge from the projectile was simulated by separation of a plunger from the specimen in a test apparatus. Critical setback pressures are substantially reduced as the separation is increased (see Table 4-9[5]).

If the explosive is considered to behave as a fluid, the pressure at the base of the charge cavity is essentially the weight of a column of explosive of unit area and length equal to that of the explosive charge, multiplied by the acceleration

$$P = 0.036\,\rho a L, \text{ psi} \qquad (4\text{-}2)$$

where

P = pressure at base of charge cavity, psi

ρ = density of explosive charge, g/cm^3

a = acceleration, number of g's

L = length of explosive charge, in.

TABLE 4-8

TEMPERATURES REACHED BY AIR WHEN COMPRESSED ADIABATICALLY

Setback Pressure, psi	Temperature, °F
1,000	1,480
2,000	1,910
5,000	2,620
10,000	3,330
20,000	4,120
50,000	5,490
100,000	6,800

TABLE 4-9

CRITICAL SETBACK PRESSURES OF EXPLOSIVES OF VARIOUS BASE SEPARATIONS

	Pressure, psi*		
Explosive	No Separation	1/16 in. Separation	1/8 in. Separation
Composition B	87,500	32,000	11,200
Cyclotol 75/25	82,000†	31,500	–
TNT	86,000	37,000	19,500
Tritonal 80/20	87,000†	–	–

*Maximum setback pressure at which explosive cannot be initiated at 125°F in 25 or more shots.
†Extrapolated 0% point.

In a typical projectile with an explosive charge of Composition B (ρ = 1.7), 10 in. long, the pressure at 30,000 g's would come to about 18,300 psi. Since this pressure is several times the 2,200 to 3,000 psi compressive strength for Composition B, the assumption of fluid behavior is quite valid.

The setback initiation pressure drops linearly with increasing temperature to zero at the cook-off temperature. This increase in sensitivity with increasing temperature can raise the probability of bore prematures where projectiles are left in hot gun chambers for appreciable periods before firing.

Findings that cavities such as bubbles, incidental to the casting process, and grit inclusions can cause substantial reduction in critical setback pressures have resulted in the following suggested provisions in projectile loading standards[4,31,32]:

1. No cavities should be permitted at the interface of explosive charge and inside base of the projectile.

2. No cavity should be permitted in the explosive charge close to its base.

3. No grit should be permitted in the projectile.

4. No projectile with deep gouges on the interior surface at the base area should be accepted.

4-3.4 OTHER EFFECTS

4-3.4.1 VIBRATION

No evidence is available which indicates that explosives *as* such are affected by vibration of the types to which military items may be subjected. As structural materials, of course, explosives may be severly damaged by vibrations. Included in such structural damage is crumbling, after which small particles of explosive, under the influence of strong vibration, may move considerable distances and become lodged in crevices where vibrational friction or repeated impact might result in initiation. The prediction of such conditions cannot be reduced to a formula. However, for items subject to vibration, some consideration should be given the resonant properties of explosive/inert structures combinations.

It has been shown that primer pellets can dust from the cup due to severe vibration. This dusting of the priming mixture can cause either misfires or hangfires and, conceivably, premature functioning in the cartridges[33].

A number of standard tests have been devised to simulate vibrations to which materiel is subjected[7].

4-3.4.2 FRICTION

The sensitivity of explosives to friction is well known from a qualitative point of view, but meaningful quantitative techniques for its measurement are not included in the standard explosive laboratory procedures. Some data are given in Table 4-2 and the test is described in par. 12-2.1.2.2. Their quantitative applicability to practical problems is not clear. Situations in which explosives are subject to frictional movement should be carefully avoided in design, as well as in handling and loading practices. At least one fatal accident has been ascribed to TNT in projectile fuze threads[34]

4-3.4.3 ELECTRICITY

The electrical influences to which materiel is exposed are discussed in par. 1-2.4. The most serious electrical problems stem from the possibility of initiation of electric initiators by spurious signals. Par. 5-2.4 contains information regarding the input characteristics of such items. Normally an electric initiator cannot discriminate between intentional and accidentally applied signals.

Static electricity can be a source of spurious signals for the initiation of electrical items and, in addition, is a hazard in the

loading of explosives. Sensitivities to static electricity of powdered explosives are given in Table 4-2 and tests are described in par. 12-2.1.2.10. Except for primary explosives, most explosives are quite insensitive to static electricity after loading. However, most pressed explosives (with the exception of plastic bonded explosive) are subject to a certain amount of crumbling and chalking at exposed surfaces. If such attrition of the surfaces is not prevented by appropriate coating or other covering, the powdered material can constitute a static hazard. Installations where initiators or bulk explosives are handled or stored should be made with conductive floors and bench tops and .all personnel should be properly grounded by conductive shoes, bracelets, or other means.

For details about hardening weapon systems against RF energy, see Ref. 35.

4-3.4.4 IRRADIATION

Most materiel is packaged to exclude infrared, ultraviolet, and visible radiation; and the likelihood of any appreciable dosage of X-rays or nuclear radiation seems remote.

Primary explosives, including lead and silver azide, decompose when exposed to visible and ultraviolet light. At intensities many times higher than that of direct sunlight, a number of investigators have been able to initiate some of these substances by such radiation[36]. The initiation is found to be basically thermal although there is some evidence of photochemical action in some cases. Decomposition under usual daylight or artificial illumination is too slow to affect these materials in the exposure times associated with ordinary loading. However in the loading plant, exposure of lead azide to direct sunlight is avoided. Decomposition of secondary explosives by visible or ultraviolet radiation is generally too slow to detect.

Data obtained on the effects of exposure to gamma radiation at an average rate of 10^5 R/hr are summarized in Table 4-10[36]. Note that the effects on most materials are quite small and that the greatest effects are those on lead azide.

REFERENCES

a-k Lettered references are listed in the General References at the end of this handbook.

1. AMCP 706-115, Engineering Design Handbook, *Environmental Series, Part One, Basic Environmental Concepts.*

2. AR 70-38, *Research, Development, Test and Evaluation of Materiel for Extreme Climatic Conditions,* Dept. of Army, May 1969.

3. F. W. Brown, D. J. Kusler, and F. C. Gibson, *Sensitivity of Explosives to Initiation by Electrostatic Discharges,* Report RI-3852, Commerce Dept., Bureau of Mines, 1946.

4. S. J. Lowell, M. E. Pollack, R. T. Schimmel, *Evaluation of Minol-2 as a Bomb Filler,* Report TR 3830, Picatinny Arsenal, Dover N.J., December 1968.

5. R. L. Wagner and M. E. Pollack, *Development of alt Impact Sensitivity Test for Cast and Pressed Explosives,* Report TR 2290, Picatinny Arsenal, Dover, N. J., June 1956.

6 R. W. Heinemann and R. T. Schimmel, *Sensitivity of Explosives to Setback Pressure,* Report TR 2572, Picatinny Arsenal, Dover, N. J., December 1958.

7 *Surveillance of High Explosives,* Report TR 986, Picatinny Arsenal, Dover, N.J., August 14, 1939.

8. M. J. Kamlet, *Perspectives and Prospects*

TABLE 4-10

DATA OBTAINED FROM EXPLOSIVES AFTER EXPOSURE TO GAMMA RADIATION

	TNT	Tetryl	RDX	Lead azide	Lead styphnate	Diazodinitrophenol	Nitroglycerin	PETN
Weight of sample, g	5	5	5	2	5	2	1	5
Volume of gas produced, ml/g, in the following times, days								
10	0.02	0.10	0.16	1.10	0.05	0.25	2.5	0.10
20	0.04	0.20	0.44	1.95	0.07	1.55	5.0	0.43
30	0.06	0.35	0.87	2.90	0.09	3.25	7.5	1.04
40	0.08	0.48	1.49	3.95	–	5.60	9.0	2.33
50	0.11	0.66	–	5.30	0.10	7.2	10.8	–
90	0.20	1.40	–	–	0.12	–	–	–
Total irradiation time, days	90	90	44	52	90	45	56	42
Purity of sample, by chemical analysis, %								
original material	–	–	–	93.08	–	–	–	–
irradiated material	–	–	–	89.04	–	–	–	–
Melting points, corrected, °C								
original material	82.1	128.8	204.8	–	–	–	–	140.8
irradiated material	80.9	127.8	204.8	–	–	–	–	137.0
Sensitivity to impact, Picatinny Arsenal machine, in.*								
original material	13	–	9	3	6	2	–	–
irradiated material	12	–	8	3	6	2	–	–
Sensitivity to impact, Bureau of Mines machine, cm"								
original material	95	25	40	65	20	4	–	–
irradiated material	95	26	25	75	22	3	–	–
Sand test, 200 g bomb, grams of sand crushed when sample was ignited by black-powder fuse only								
original material	–	–	–	20.5	14.1	22.1	–	–
irradiated material	–	–	–	18.7	14.3	14.1	–	–
Sand test, 200 g bcmb, grams of sand crushed when sample was initiated by 0.30g of lead azide								
original material	48.9	56.4	61.7	–	–	–	–	–
irradiated material	50.1	56.0	62.0	–	–	–	–	–

"Minimum height of fall of 2.0kg weight to produce at least one explosion in ten trials.

for Research in High Energy Chemistry in 1966-1975; I. Heat-Resistant Explosives (U), Report NOLTR 65-220, Naval Ordnance Laboratory, Silver Spring, Md., 24 May 1966 (Confidential report) (AD-373 129).

9. A. J. Pascazio, *The Suitability of a Bare PBX Booster Pellet in the 2.75-Inch Head M1 Rocket Head,* Report TR 2271, Picatinny Arsenal, Dover, N.J., November 1955.

10. R. W. Heinemann and S. J. Lowell, *Prevention oj Exudation from Ammunition Items,* Report TR 2675, Picatinny Arsenal, Dover. N.J., February 1960.

11. G. W. Peet and L. F. Gowen, *Evaluation Test Results on Service and Experimental Squibs,* NAVORD Report 6061, Naval Ordnance Laboratory, Silver Spring, Md., 4 March 1958.

12. B. 'J. Meleski, *Development of Flexible*

Explosive Lead, Mark 11 Mod 0, and Warhead Booster Mark 36 Mod I, NAVORD Report 6664, Naval Ordnance Laboratory, Silver Spring, Md., 30 June 1959.

13. R. L. Wagner, *Development of a Modified M47 Detonator Having Improved Cook-Off Characteristics,* Report TR 2519, Picatinny Arsenal, Dover, N.J., June 1958.

14. R. McGill and P. L. Holt, Eds., *Proceedings of the Gilbert B. L. Smith Memorial Conference on Explosive Sensitivity,* NAVORD Report 5746, Naval Ordnance Laboratory, Silver Spring, Md., 2 June 1958.

15. W. H. Rinkenbach and A. J. Clear, *Standard Laboratory Procedures for Sensitivity, Brisance, and Stability of Explosives,* Report TR 1401, Rev. 1, Picatinny Arsenal, Dover, N. J., February 1950.

16. *Third Symposium on Detonation,* Report ACR-52, Office of Naval Research, Navy Dept. September 26-28, 1960.

17. R. L. Wagner and R. W. Snook, *Thermal Stability of Several Electric Detonators,* Report TR 2482, Picatinny Arsenal, Dover, N.J., March 1958.

18. Gunther Cohn, *Cook-Off in Aircraft Guns, Summary 1952-1959,* Report F-A2144-2, The Franklin Institute, Phila., Pa., Contract DA-36-034-501-ORD-10RD, June 1960 (SPIA 20-688, AD-239 808).

19. *Physical Testing of Explosives, Part II – Sensitivity Studies With the Drop-Weight Impact Machine* Report OSRD 5744, Office of Scientific Research and Development, December 27, 1945.

20. G. V. Horvat and E. J. Murray, *Propagation of Detonation in Long Narrow Cylinders* of *Explosives at Ambient Temperature and at – 65°F,* Report TR 2389, Picatinny Arsenal, Dover, N.J., January 1957.

21. L. H. Eriksen, *Action of Explosives on Metals Used in Ammunition,* Report TR 1493, Picatinny Arsenal, Dover, N.J., 24 January 1945.

22. B. V. Zlotucha and .M. Baer, *The Reactivity of Explosives' With Metals and Protective Finishes,* Report TR 2288, Picatinny Arsenal, Dover, N.J., May 1956.

23. S. Urman and I. Kabik, *Hazards* of *Copper Azide (U),* Report NOLTR 72-1 13, U.S. Naval Ordnance Laboratory, Silver Spring, Md., 8 September 1972 (Confidential Report).

24. M. C. St. Cyr, *Compatibility of Explosives With Polymers,* Report TR 2595, Picatinny Arsenal, Dover, N.J., March 1959 (AD-7 14634).

25. N. E. Beach and V. K. Canfield, *Compatibility of Explosives With Polymers, II,* Report 33, Plastics Technical Evaluation Center, Picatinny Arsenal, Dover. N.J., April 1968 (AD-673 713).

26. N. E. Beach, *Compatibility* of *Explosives With Polymers: A Guide to the Reactions Reported in PATR 2595,* Note 22, Plastics Technical Evaluation Center, Picatinny Arsenal, Dover, N.J., October 1970 (AD-7 16 624).

27. N. E. Beach and V. K. Canfield, *Compatibility of Explosives With Polymers, III,* Report 40, Plastics Technical Evaluation Center, Picatinny Arsenal, Dover, N.J., January 1971 (AD-721 004).

28. S. D. Stein and M. E. Pollack, *Development of an Improved Rifle Bullet Impact Sensitivity Test,* Report TR 2247, Picatinny Arsenal, Dover, N.J., May 1956.

29. R. L. Jameson and J. S. Williams, *Velocity Loss of Projectiles Passing Through High Explosives,* BRL Memo 1127, Aberdeen Proving Ground, Md., October 1957.

30. AMCP 706-247, Engineering Design Handbook, *Ammunition Series, Section 4, Design For Projection.*

31. L. Jablansky, *Factors Affecting Sensitivity* of *Composition B to Setback,* Report TR 2433, Picatinny Arsenal, Dover, N. J., June 1957.

32. S. D. Stein, *Proposed Shell Loading Standards Based on a Statistical Study of Setback Sensitivities.* Report 63, Explosives Development Section, FREL, Picatinny Arsenal, Dover, N.J., May 1959.

33. D. J. Savory, *Development of Initiator XM41 and Supplementary Testing for Project Mercury,* Report 1709, Frankford Arsenal, Philadelphia, Pa., March 1964.

34. S. D. Stein and S. J. Lowell, *Initiation of Explosive in Shell Threads,* Report TR 2441, Picatinny Arsenal, Dover, N. J., July 1957.

35. AMCP 706-235, Engineering Design Handbook, *Hardening Weapon Systems Against RF Energy.*

36. F. P. Bowden (Leader), "A Discussion of the Initiation and Growth of Explosion in Solids", Proc. Royal Society, Series A. Mathematics and Physical Sciences, **246,** 1245 (1958).

PART TWO – DESIGN CONSIDERATIONS

CHAPTER 5

PRIMERS AND DETONATORS

5-1 DESCRIPTION AND SELECTION

5-1.1 INTRODUCTION

Explosive materiel serves its function only if exploded at the intended time and place. The fuze is the mechanism which senses these circumstances and initiates the explosive reaction in response to the stimulus generated by target impact, proximity, or some other circumstance or combination of circumstances to which the fuze is designed to respond.

The first explosive component or initiator is that explosive charge which starts the explosive reaction in response to the initiating stimulus. At the other end of the train is the main bursting charge that produces the desired effect at the target. The intervening components establish a detonation wave, introduce the desired delay, guide the detonation through the required path, and augment the detonation.

This part is concerned with each of the explosive charges which make up the explosive train. Each is described, its characteristics are specified and design procedures are given. In addition, there are presented a number of other explosive charges used as auxiliary devices, such as actuators and explosive bolts, or the related field of demolition devices. such as destructors. Finally, methods of loading and fabrication and techniques for evaluation procedures are discussed. Primers and detonators are treated in this chapter while the other components are covered in the chapters that follow. While a relay in the explosive train often follows the delay, it is more nearly related to a flash detonator. Hence, relays are discussed in par. 5-1.3.4.

5-1.2 FUNCTION AND CONSTRUCTION

The first element of the explosive train is the initiator. It responds to the target stimulus received by the fuze and starts the explosive reaction. Initiators are classified according to the nature of the stimulus to which they are designed to respond as stab, percussion, or electric and according to their output characteristics as primers, detonators, or squibs.

A primer is a relatively small sensitive explosive component used as a first element in an explosive train. As such it serves as an energy transducer converting mechanical or electrical energy into explosive energy. In this respect, the primer is unique among the other explosive components in a train. A primer, which is loaded with sensitive material, has a relatively small explosive output and will not reliably initiate secondary high explosive charges. Sometimes, however, the purpose of the primer is performed for convenience by a detonator. A squib is a type of electrically initiated primer.

A detonator is a small sensitive explosive component which is capable of reliably initiating high order detonation in the next high explosive element in the explosive train. In differs fron the primer in that its output will initiate reliably secondary high explosive

charges. It can be initiated by nonexplosive energy, in which case it includes the action of a primer, or by the output of the primer. Furthermore, when acted upon by sufficient heat, or by mechanical or electrical energy, it will detonate.

Primers and detonators are housed in cylindrical cups of aluminum or stainless steel. Copper and gilding metal are being phased out because of incompatibility of lead azide with copper. The open end is sealed with a closing disk of metal or of paper over which the end of the cup is crimped. In case of electric initiators, the cup is crimped over the plug which contains lead wires or contact pin. Primers contain an explosive priming mix while detonators contain three charges primary, intermediate and base although sometimes two of these are combined. The primary charge is near the input or acceptor end and the base charge is near the output end.

5-1.3 INITIATOR TYPES

5-1.3.1 STAB INITIATORS

The stab initiator is a rather simple item consisting of a cup loaded with explosives and covered with a closing disk. It is sensitive to mechanical energy. A typical stab detonator is shown in Fig. 5-1(A).

5-1.3.2 PERCUSSION PRIMERS

Percussion primers differ from stab initiators in that they are initiated and fired without puncturing or rupturing their containers. They are therefore used in fuzes mainly as initiators for obturated (sealed) delay elements. The essential components of a percussion primer are a cup, a thin layer of priming mix, a sealing disk, and an anvil. Initiation is accomplished by a blunt firing pin that squeezes the priming mix between cup and anvil. Typical percussion primers are shown in Figs. 5-1(B) and (C). In general, they are less sensitive than stab initiators (1 2 in.-oz is a typical "all fire" point). Percussion primer cups are constructed of ductile metals. commonly brass, in order to avoid rupture by the firing pin.

5-1.3.3 FLASH DETONATORS

Flash detonators are essentially identical in construction to stab initiators. They are sensitive to heat. A typical flash detonator is shown in Fig. 5-1(D). Flash detonators are considered to be initiators for convenience of grouping even though they are not the first element in the explosive train.

5-1.3.4 RELAYS

A relay is very similar to a flash detonator. Typical relays are shown in Fig. 5-2. While relays can be separate components, they can also be the last increment in a delay element. The input characteristics are essentially those of a flash detonator (see par. 5-2.3) while the output characteristics can be those of a primer or a detonator as desired (see par. 5-3).

The usual relay consists of an aluminum cup into which lead azide is pressed. In some relays, a sealing disk is crimped over the open end while in others, the end is left open, but the skirt left by partial filling is crimped to an angle. When such relays are inserted into delay elements and crimped in place, the crimp is compressed just sufficien ly to result in a firm and snug fit.

5-1.3.5 ELECTRIC INITIATORS

Electric primers and electric detonators differ from stab initiators in that t ıey contain the initiation mechanism as an integral part. They constitute the fastest growing class of explosive initiators.

Several types of initiation mechanism are commonly employed in electric initiators: hot wire bridge, exploding bridgewire. film bridge. conductive mixture, and spark gap. While these types, depending on specific design, may or may not provide initiators with large differences in input sensitivities, they do

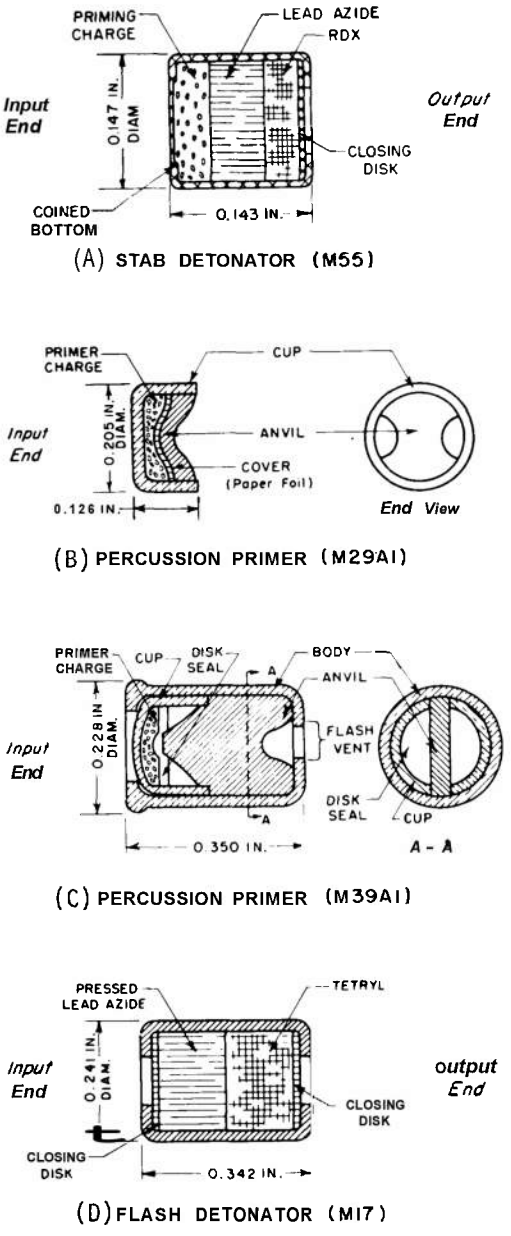

Figure 5-1. Typical Primers and Detonators (Mechanical)

exhibit different electrical characteristics. Typical electric initiators are shown in Fig. 5-3. Electrical contact is by means of two

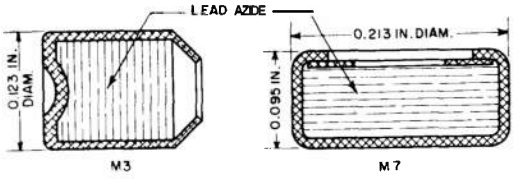

Figure 5-2. Typical Explosive Relays

wires, by center pin and case, or occasionally by two pins.

To indicate construction, let us examine a wire lead initiator. Two lead wires are molded into a cylindrical plug, usually of Bakelite, so that the ends of the wire are separated by a controlled distance on the flat end of the plug. This gap can then be bridged with a graphite film or a bridge wire.

Most detonators have diameters from 0.1 to 0.25 in. A typical example of a "mini" detonator is shown in Fig. 5-4. It has the standard components of a bridgewire electric initiator but its diameter is a mere 0.1 in.

5-1.3.6 SQUIBS

The operating parts of squibs are identical to those of electric initiators. However, squibs do not have outer metal cups. A typical squib is shown in Fig. 5-5. A low explosive, flash charge is provided to initiate the action of pyrotechnic devices.

5-1.3.7 GROUPING OF INITIATOR TYPES

Primers and detonators are commonly placed into two groups, namely, mechanical and electrical. Electrical includes those which are initiated by an electric stimulus while all others (except flash types) are mechanical. Therefore, the mechanical group includes not only percussion and stab elements that are initiated by the mechanical motion of a firing pin but also flash detonators that are included because of their similarity in construction and sensitivity. As a group, electric initiators are more sensitive and differ from the mechanical

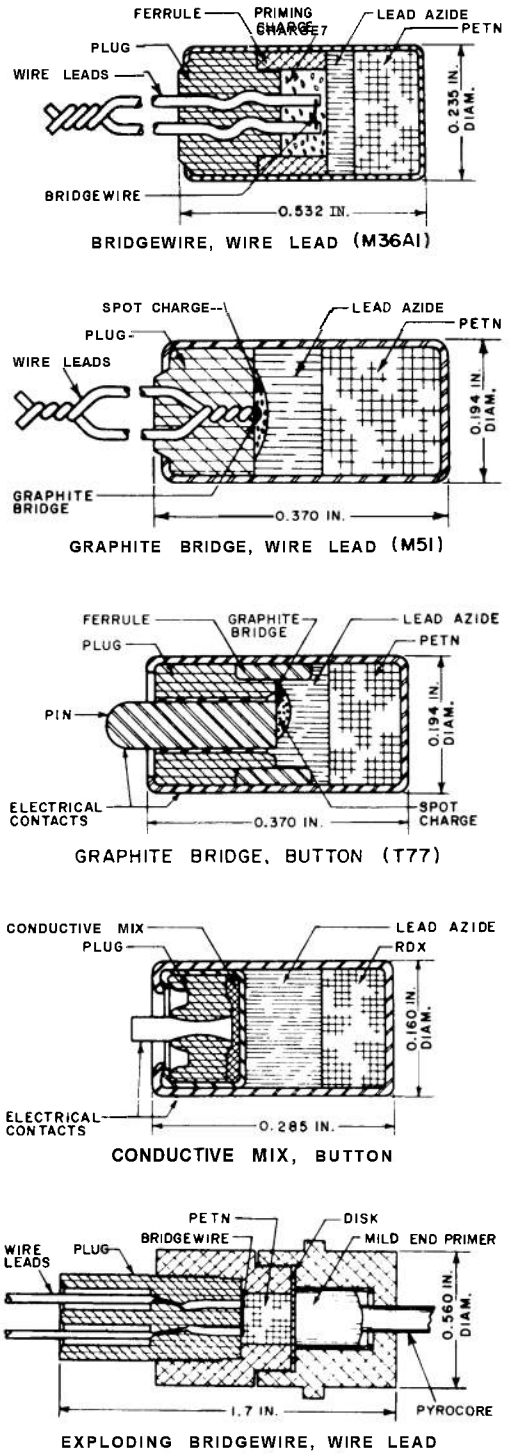

Figure 5-3. Typical Primers and Detonators (Electrical)

group in that they contain the initiating mechanism, the plug, as an integral part.

One interesting detonator cuts across the two groups, the stab-electric detonator. It is an adaptation of the button type electric initiator in which the pin is replaced by a small-diameter stab detonator (see Fig. 5-6). It is intended for use where a detonator is initiated either by means of a stab firing pin (which is centered) or by means of an electric pulse (applied to outside case and stab case as contacts). The two components are designed as conventional separate detonators except that the stab element is small. While this type detonator is developed, fuze designers have yet to find an application for its use.

Delay detonators are those initiators which contain a delay charge after the priming charge so as to introduce a time delay in the output detonation. These are discussed in par. 6-1.

5-1.4 BASES FOR SELECTING AN INITIATOR TYPE

In selecting an initiator for a specific task, one must consider two main criteria, input and output. For the latter, both type of output and time in which this output is to be delivered are important. In addition to these main criteria, size, weight, cost, and reliability should also be considered.

With regard to initiator input conditions, it is probable that the design of the rest of the system has already established whether an electric or mechanical initiator is to be used. If not, the designer is free to choose any system that solves his problem most easily. Mechanical initiators are usually simpler to use than electric ones. If the item is to be completely sealed, a percussion primer is indicated over a stab primer. The need for fast functioning times, less than a few hundred microseconds, or for functioning an initiator that must be remotely located from the source of power can be satisfied most easily by the electric type.

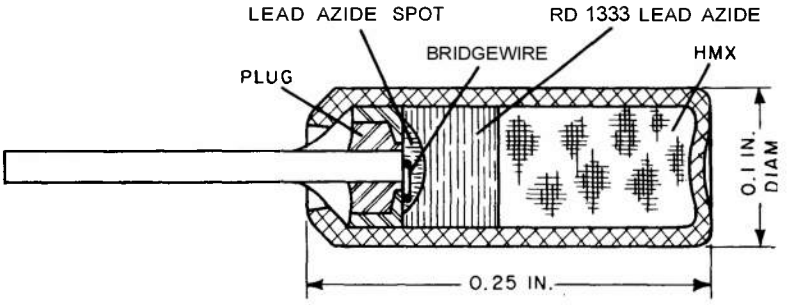

Figure 5-4. Electric ""Mini""Detonator

Once having selected the general method of initiation, the next consideration is that of sensitivity. As a general rule, the designer should use the least sensitive item available that meets his other requirements. Stab detonators are more sensitive than percussion detonators. Electric initiators can be made to fall anywhere in a wide range of sensitivities. Initiation by friction or spark cannot be closely controlled so that components initiated in this manner are rarely, if ever, used. They present both safety and sensitivity problems.

In the case of mechanieal initiators, the designer will select the firing pin so that he has complete control on the initiation mechanism. For electric initiators, on the other hand, the power source may be located elsewhere in the system and may have other functions to perform. In sueh instances, close coordination with the other systems people involved is mandatory so that the initiator will be certain to receive the eorreet stimulus.

For each initiator, definite firing input conditions are specified. It is wise to hold very closely to these conditions. For example, if the specified input should be designated as 300 V from a 0.001 μF capaeitor, then the designer should make certain that intervening circuitry between capacitor and initiator does not reduce the amplitude or modify the wave shape delivered to the initiator. The assumption that a similar amount of energy delivered from a different size capaeitor will fire the initiator is risky indeed.

At the same time the designer selects a type of initiation and an input condition that is compatible with his system, he must consider the type of output desired. As in the case of input, the first choice is relatively simple. The application of the system should indicate whether the output is to be a detonation, a flame, or a mechanical function. If, for example, the initiator is to be the first element of an explosive train leading to the detonation of high explosives, then the designer requires a detonation as an output, or a high-explosive train. On the other hand, a low-explosive train is called for when the output must be flame or gas. Unfortunately, available output data are more sketchy than input data so that firm, quantitative choices of output are difficult to make. Adequate testing is usually required. For more information about low-explosive trains, see Ref. 1.

In addition to the type of output, one is usually coneerned with the functioning time of the initiator, which is the interval from delivery of the input to the initiator until the output of the initiator is realized. If very fast initiation is required in an electric detonator, an initiator using lead azide as its initial charge probably will be necessary. Somewhat longer acceptable times may permit the use of lead styphnate as the initial charge. Functioning times usually are published as a function of the input stimuli[e].

In addition to these criteria, one must consider size, weight, and cost. The smallest and simplest deviee is the least expensive, and

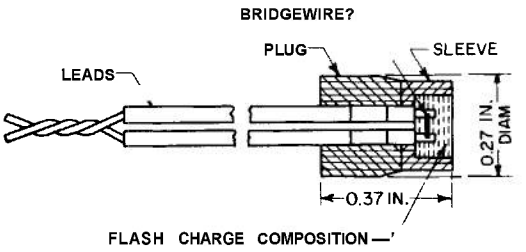

Figure 5-5. Electric Squib, M2

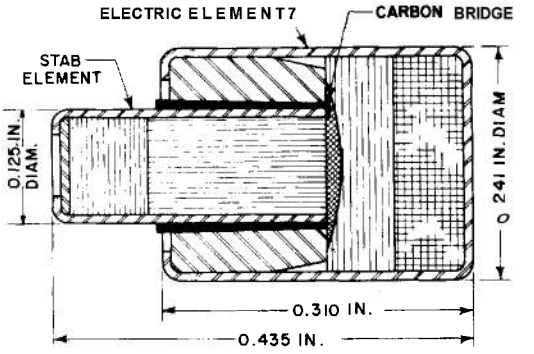

Figure 5-6. Stab-electric Detonator, T29

incidentally the most reliable, but it is limited in versatility, sensitivity, and functioning time. Size and weight are always of some importance but are relative. They can become critical in the case of a 20 mm fuze while they may be less important in a large missile. In the same manner, the unit cost of an item can be critical if the application calls for millions of devices while it may be of little concern if a relatively few items are to be made. High reliability is expensive but the designer has no choice but to meet this specification when it is required.

Hence, the bases for selecting initiators are not clear cut and require considerable engineering judgment. Two hints may be offered to simplify this task. First, initiators have been developed by the military agencies along certain family lines so that a specific input may be tied to a series of explosive components with different mounting systems, outputs, and functioning times. Conversely, a specific type of output can be traced back to an assortment of initiators requiring differing inputs. These family groups greatly facilitate final selection. Second, many explosive trains of different types exist which have a record of proven performance. Compilations of such past practice make for a good starting place'.

5-2 INPUT CHARACTERISTICS

5-2.1 STAB INITIATORS

5-2.1.1 INITIATION

The firing pin used for stab initiators, a truncated conical pin, is shown in Fig. 2-9. Firing pin characteristics and the relationship of firing pin velocity to sensitivity are discussed in par. 2-3.3.2.

Table 5-1 lists the compositions of common stab and percussion priming mixtures which are used by the Armed Forces.

5-2.1.2 EFFECTS OF DISK AND CUP THICKNESS

The energy required to fire stab initiators increases nearly linearly with the thickness of metal that the firing pin penetrates. The zero thickness intercept of the drop height curve may be presumed to be the energy necessary to pierce the metal. Although data are not on hand, it might be expected that use of stainless steel rather than aluminum in this application would result in a less sensitive initiator. There is every reason to expect that this relationship interacts with other variables such as firing-pin dimensions and tolerances and the composition and density of the priming mix.

5-2.1.3 EFFECTS OF TEST APPARATUS

Sensitivities of stab initiators are usually specified in terms of weight and height, measured with some standard test apparatus (see pars. 2-3.3.2 and 12-2.1.2.1). Often the firing pin is not changed in design when the dropped weight is varied. As the weight is reduced to approach that of the firing pin,

TABLE 5-1

COMMON PRIMING COMPOSITIONS

Ingredients	FA956	FA982	PA100	PA101	NOL60	NOL130	M31 Igniter Mix
	Composition, percent by weight						
Lead styphnate, basic	–	–	–	53	60	40	
Lead styphnate, normal	37	36	–	–	–	–	
Barium nitrate	32	22	–	22	25	20	
Lead azide	–	–	5	–	–	20	
Tetracene	4	12	–	5	5	5	
Lead dioxide	–	9	–	–	–	–	
Calcium silicide	–	–	–	–	–	–	
Aluminum powder	7	–	–	10	–	–	
Antimony sulfide	15	7	17	10	10	15	
PETN	5	5	–	–	–	–	
Zirconium	–	9	–	–	–	–	
Potassium chlorate	–	–	53	–	–	–	55
Lead thiocyanate	–	–	25	–	–	–	45

motion of the pin and energy distribution in the system become quite complex.

The support of the primer is also important. Cushioned support can make an item seem much less sensitive than it is.

Care must also be taken that the movement of the firing pin is not restricted so that its penetration is less than that which would result from free movement under the action of the drop weight. To overcome some of these problems, a new tester has been constructed in which a firing pin is attached to the moving weight. This arrangement appears to give more consistent results with small detonators[2].

5-2.2 PERCUSSION PRIMERS

5-2.2.1 INITIATION

Percussion primers are fired with round-nosed firing pins. A typical radius is about 0.050 in. but variations between 0.023-in. radius and flat had little effect of sensitivity in one investigation'. Other firing pin characteristics and the relationship of firing pin velocity to sensitivity are discussed in par. 2-3.3.3. Priming compositions are listed in Table 5-1.

5-2.2.2 SEALING DISKS AND CUPS

The material and thickness of sealing disks affect the sensitivity of percussion primers. As an example, data for the MARK 101 Primer are given in Table 5-2[a].

In a test of the effects of cup hardness, in which cups ranging from 31.2 to 105.7 Vickers Hardness were used, the trend toward higher drop heights with increasing hardness was apparent but was neither practically nor statisfically significant.

5-2.2.3 OTHER VARIABLES

Loading pressure has a negligible effect upon sensitivity of percussion primers in the range from 10,000 to 60,000 psi. Mixtures that do not contain highly soluble components are sometimes loaded as a paste without significant effect on input properties.

Although quantitative data are not avail-

TABLE 5-2

EFFECTS OF CUP OR SEALING DISK ON SENSITIVITY

Seal	Thickness, in.	50% Firing Height, in.	Std. Dev., in.
Paper disk	0.003	1.95	0.41
Tin disk	0.005	3.74	0.34
Copper disk	0.005	4.04	0.56
Tin cup	0.005	4.00	0.63
Copper cup	0.002	3.88	0.69
Copper cup	0.003	4.19	0.64
Copper cup	0.004	4.83	0.91
Copper cup	0.005	5.00	0.98

Primer MARK 101, 4-Ounce Ball

able, it is clear that firing energy requirements can be expected to increase with thickness and hardness of the primer cup, and with thickness of the layer of primer mix between anvil and cup. Movement of the anvil can drastically reduce the sensitivity to normal firing pin action, while increasing the sensitivity to accidental jars and vibrations. Firm support of the primer is essential (see par. 5-4.3.2).

5-2.3 FLASH DETONATORS

5-2.3.1 INITIATION

The input characteristics of flash initiators and relays are difficult to characterize in terms that are significant indications of performance under usual conditions. These items are usually initiated by the spit of a primer, the heat from a delay column, or other action of previous explosive elements. The exact mechanism of initiation varies with the application. In some cases, the flame may ignite the explosive; in others, either the impact or heat of solid particles or a shock wave may play important roles. No useful, quantitative results have been obtained with gap tests to determine sensitivity of the items. See pars. 2-3.2.4 to 2-3.2.6 on adiabatic compression theory.

5-2.3.2 EFFECT OF EXPLOSIVE AT INPUT END

Although U.S. flash detonators have lead azide at the input (also called sensitive) end, lead styphnate has been used in a number of foreign items and in our nonelectric military blasting cap (M7) to enhance sensitivity of functioning of the cap to a spit of a black powder fuze. Tests indicate that such items should be appreciably more sensitive than lead azide items. Although no data are at hand to support this view, possibly finer particle sizes and lower loading densities should result in more sensitive items. The fact that flash detonators are ignited by rather diffusely distributed heat might encourage the idea that materials like tetryl and PETN, which have rather low ignition temperatures, might be effective at the input end of a flash detonator. However, these materials are much less sensitive to heat pulses of short duration than lead azide or lead styphnate. One flash detonator, the M31, contains a primer charge of calcium chlorate/lead styphnate, apparently, to increase its flash sensitivity. This charge also increases its mechanical sensitivity to stab action. Normally, flash detonators (containing lead azide) cannot be initiated with a stab firing pin.

5-2.3.3 EFFECT OF CONSTRUCTION AT INPUT END

According to a gas blast tester, a flash detonator, in which the sensitive end was the unpierced bottom of an aluminum cup coined to 0.0003-in. thickness, required gas pressure about three times as high for initiation as one with a closure consisting of a paper disk 0.0015-in. thick held in place by an aluminum washer crimped into the cup. The sensitivity of flash detonators to initiation by hot gases is determined largely by the heat flow patterns and resulting thermal gradients. A factor that undoubtedly contributes to the insensitivity of the coined bottom detonator is the continuous metal path from the bottom around to the sides. Although the paper disk, as a better insulator, impedes the flow of heat

from the gas to the explosive, it also impedes the transverse flow to the edges which distributes the heat more easily.

5-2.4 ELECTRIC INITIATORS

5-2.4.1 INPUT SENSITIVITY

The input characteristics of electric initiators are subject to precise control over quite remarkable ranges. Items have been designed with threshold firing energies ranging from less than one erg to hundreds of thousands of ergs, with current requirements from hundredths to hundreds of amperes, and resistance from a few hundredths of an ohm to tens of megohms.

Determination of input sensitivity of electro-explosive devices requires sophisticated testing equipment and is considerably more involved than that of stab and percussion detonators. For a discussion of initiation theory, see par. 2-3.2; for details on testing the items, see par. 12-2.2.2. Specifications for military electric initiators are covered in MIL-I-23659[3], and input characteristics of specfic devices are recorded in the *Electric Initiator Handbook*[e].

Input sensitivity varies sharply with the type of transducer. Each type—hot bridgewire, exploding bridgewire, film bridge, conductive mix, and spark gap--must therefore be considered separately.

5-2.4.2 HOT BRIDGEWIRE INITIATORS

Of all initiators, those in which explosives are initiated by electrically heated wires behave most precisely in a manner that can be logically anticipated. For this reason, detonators of this type can be designed quite readily and precisely to any desired input characteristics, within the relatively broad limits imposed by properties of available materials, and the rather simple laws that govern their behavior.

5-2.4.2.1 FLASH CHARGE EXPLOSIVES

The explosive in direct contact with the bridgewire is known as the flash charge and sometimes as the spotting charge. Relative sensitivities of a number of explosives are given in Table 2-6. Normal lead styphnate has the broadest general use at present. For applications where extremely rapid response is needed, lead azide has been used. Lead azide is also finding application in initiators that are required to withstand extremes of temperatures over the extended ranges of modern missile applications (see pars. 4-2.2 and 4-2.3).

Since the sensitivity of hot bridgewire initiators is determined largely by heat-flow patterns, both particle size and loading density have important effects on sensitivity. Three aspects of heat-flow are involved: transfer between wire and explosive, dissipation through the explosive from the heated surface, and longitudinal flow through the wire (end effects). Of these aspects, sensitivity is increased by the first and decreased by the other two. The use of explosives of very fine particle size results in improved contact between explosive and wire and, at the same time, reduces the bulk conductivity of the explosive. Explosives have been ground in ball-mills, to take advantage of this tendency. It was found that milling for longer periods resulted in more sensitive initiators[4]. Both lead styphnate and lead azide have been manufactured by processes involving rapid precipitation. The materials so produced are referred to as *colloidal*. Information about these materials is given in MIL-L-757 for normal lead styphnate and MIL-L-3055 for lead azide. Basic lead styphnate, as procured under MIL-L-16355, has particle sizes in the range between 5 and 95 μ, which is highly satisfactory for flash charge use.

Loading density or pressure, as it is increased, may increase sensitivity by improving contact between wire and explosive or decrease it by increasing the rate of dissipation of heat through the explosive. In lead

styphnate, loaded at pressures between 1000 and 4000 psi, the latter trend apparently dominates. On the other hand, lead azide loaded at pressures between 3000 and 90,000 psi becomes more sensitive with increasing loading pressure.

5-2.4.2.2 BRIDGEWIRE RESISTANCE

The resistance of a bridgewire is given by

$$R = 0.0005 L r_w / d^2, \text{ ohm} \qquad (5\text{-}1)$$

where

R = wire resistance, ohm

L = wire length, mil

d = wire diameter, mil

r_w = wire resistivity, microhm-cm

Resistivities of common bridgewire materials are given in Table 5-3[5].

5-2.4.2.3 FIRING ENERGY AND POWER

As pointed out in par. 2-3.1, the assumption of a fixed initiation temperature is a valid approximation. In combination with the relatively small variation of volumetric specific heats of solids, this approximation can be extended to the general rule .that the firing energy requirement is proportional to the volume of the reaction nucleus and, further, the volume of the reaction nucleus is proportional to that of the bridgewire. Both the variation in critical temperature with size, and the effects of end losses are accounted for in the empirical equation

$$w_t = 25 + 450 d^2 L, \text{ erg} \qquad (5\text{-}2)$$

where

w_t = threshold firing energy (50% point), erg

d = wire diameter, mil

L = wire length, mil

This equation fits available data within ten percent for lead styphnate loaded either at 3000 to 5000 psi, or "buttered" or "spotted"[g,6].

On the basis of a fixed initiation temperature, the threshold power for initiation should be that required to attain equilibrium with the losses at that temperature. Experimental data indicate that, for short bridgewires where end losses dominate, the firing current requirement of lead styphnate loaded initiators is estimated from the equation[4,6]

$$I_s = 0.4/R_f \text{ (short bridgewire), A} \qquad (5\text{-}3)$$

where

I_s = current required for 50%functioning, A

R_f = bridgewire resistance at the firing temperature (assumed to be 500°C), ohm

Note that the current is independent of wire dimensions and material.

For long bridgewires a semi-empirical equa-

TABLE 5-3

RESISTIVITIES OF BRIDGEWIRE MATERIALS

Metal	Resistivity, microhm-cm at 20°C	Resistivity, microhm-cm at 500°C
Tungsten	5.5	20
Platinum	10	30
Platinum/Iridium		
90/10	24	39
80/20	31	43
Nichrome*	100	120
Tophet Ct	110	132

*Proprietary alloy of Driver-Harris Co., Newark, N.J.
†Proprietary alloy of Wilbur Driver Co., Newark, N.J.

tion has been derived which relates the current required to overcome the radial losses and which accounts for the tendency for larger wires to initiate any given explosive at a lower temperature[g]

$$I_\ell = 2.3d/\sqrt{r_w} \text{ (long bridgewire), A} \quad (5\text{-}4)$$

where

I_ℓ = threshold firing current for a lead styphnate loaded initiator with a bridgewire so long that end effects are negligible, A

d = wire diameter, mil

r_w = bridgewire resistivity at the initiation temperature, microhm-cm

Assumed values for $\sqrt{r_w}$ are 4.6 for tungsten and 11.5 for Tophet C.

The total threshold firing current I_t is given by

$$I_t = \sqrt{I_s^2 + I_\ell^2}, \text{ A} \quad (5\text{-}5)$$

However, either I_s or I_ℓ is usually so dominant that the other may be neglected. Hence, bridgewires are grouped into short or long class depending on which term dominates in Eq. 5-5.

As pointed out in par. 2-3.2.1, the hyperbolic relationship between power and energy applies quite accurately to wire bridge initiators. Details of the pulse shape are relatively unimportant. The average power, whether in the from of a damped RC discharge or an oscillatory discharge, is the important factor. The response of an initiator to complex sequences of electrical events is predicted by Eq. 2-20. The constants for Eq. 2-20 are determined from the limiting threshold energy and current (that can be calculated by means of Eq. 5-2 for w_t and **Eq.** 5-5 for I_ℓ) using the relations

$$CT_t = w_t \quad (5\text{-}6)$$

$$\gamma T_t = I_t^2 R \quad (5\text{-}7)$$

where

γ = cooling rate coefficient, W/°C

C = heat capacity of the thermal mass (including bridgewire and surrounding layer of explosive), W-sec/°C

For purposes of prediction of an absolute value of T_t, the temperature of initiators is not important if C and γ are computed by means of Eqs. 5-6 and 5-7. The quantity T_t may be taken as 500°C, which in practice has given reasonably accurate results.

5-2.4.2.4 RESPONSE TIMES

Condenser discharge firing times vary with flash charge material as well as with bridgewire characteristics and firing conditions. Table 5-4[7] gives functioning times obtained in one experiment. Fig. 5-6[e] shows functioning times of some typical military items. Azide loaded items, in general, have much shorter functioning times than those loaded with other primary explosives. Since the functioning time of a hotwire initiator is related to the ratio of the firing energy to the threshold firing energy, the variation of individual threshold energies within a lot (as indicated by the standard deviation of the mean) is reflected in functioning times.

In addition, such factors as particle size and porosity, which affect the growth of explosion, are contributing factors in the variability of functioning times. Precise control of these variables, and of those which determine threshold firing conditions, can result in highly reproducible functioning times. Careful control in test items has resulted in functioning times equal to calculated detonation transit times within a few hundredths of a microsecond (for firing conditions of 600 V discharged from a 0.01 μF capacitor, 18,000 ergs compared with a threshold of about 1300 ergs).

TABLE 5-4

FIRING TIMES OF HOT BRIDGEWIRE INITIATORS

Explosive	Milling Time, hr	Capacitance, μF 0.5	0.05	0.0047
Polyvinyl Alcohol Lead Azide	24	1.12- 1.26	1.09- 1.38	1.41- 5.00
Dextrinated Lead Azide	64	1.08- 2.43	1.12- 2.43	3.46- 4.95
Silver Azide	24	1.13- 1.47	1.17- 1.56	1.9 - 13.1
Silver Azide	64	1.23- 1.89	1.23- 2.36	1.3 - 43.1
Normal Lead Styphnate	24	11.8 -12.5	10.0 -20.6	13.1 -374.4
Normal Lead Styphnate	64	10.0 -13.7	10.6 -13.1	10.0 -381.2
Basic Lead Styphnate	24	10.6 -13.1	11.2 -23.1	20.0 -430.0
Basic Lead Styphnate	64	4.4 -13.0	12.5 -14.4	10.6 - 60.6
Diazodinitrophenol	24	8.33- 9.00	10.0 -13.8	91.2 -362.5

50 mg loads of explosives, voltage of 450 V. Times are in μsec.

Functioning times t at relatively low steady currents approach those predicted by Eq. 5-8 which is a solution of Eq. 2-20'.

$$t = \frac{C}{\gamma} \ln \left(\frac{I^2 R_f}{I^2 R - \gamma T_t} \right) \text{, sec} \qquad (5\text{-}8)$$

5-2.4.2.5 TYPICAL DESIGN PROBLEM

Design a hot wire initiator with a resistance of 2 ohms, an all-fire energy of 42,000 ergs, and a no-fire energy of 15,000 ergs.

Solution: Since firing probabilities tend to be normally distributed, with respect to the logarithm of input energy, the fifty percent point should be at the logarithmic mean of the all-fire and no-fire points

$$w_t^2 = 15{,}000 \times 42{,}000$$

$$w_t = 25{,}000$$

From Eq. 5-2

$$w_t = 25 + 450\, d^2 L = 25{,}000$$

$$d^2 L = 55$$

Assuming a Tophet C bridgewire (r_w = 110 microhm-cm from Table 5-3) and using Eq. 5-1

$$R = 0.0005 r_w L/d^2 = 2 = 0.0005 \times 110 \times L/d^2$$

$$L/d^2 = 36$$

Solving for L and d, we get

$$(L/d^2)(d^2 L) = L^2 = 55 \times 36$$

$$L = 45 \text{ mils}$$

and

$$d^2 = 55/45 = 1.2$$

$$d = 1.1 \text{ mils}$$

Thus, the requirements are met by an initiator with a lead styphnate flash charge and a Tophet C bridgewire 1.1 mils in diameter and 45 mils long. If the mechanical design of the item makes a longer bridgewire desirable, the requirements can be met with wires of lower resistivity. Where the length is fixed by other considerations, Eq. 5-2 may be solved for the diameter corresponding with

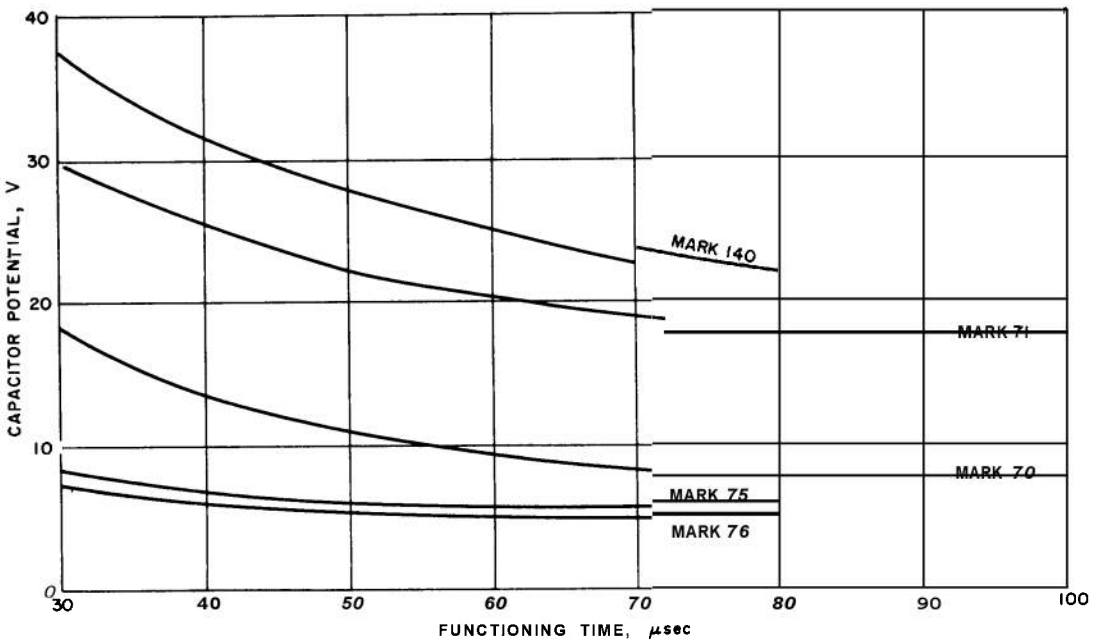

Figure 5-7. Functioning Times of Hot Wire Bridge Initiators

the given length. The bridgewire dimensions so obtained may then be substituted in **Eq.** 2-20 to determine the resistivity corresponding with the desired resistance. **A** suitable material may then be selected from Table 5-4. Should the value of resistivity be below that of available materials, "heat sinks" can be used which are essentially blind terminals to which the wire is soldered at one or more points along its length. The equations are applied to the design of such a system by considering each segment separately as a series element.

Note that while hot bridgewire initiators are more readily designed by calculation than most initiators, their exact input characteristics are affected by a wide variety of variables previously discussed as well as in par. 2-3.2.1. The formulas are empirical and in reasonable agreement with performance data **of** military fuze items loaded with colloidal or milled lead azide or lead styphnate. Since it is impractical to specify in complete detail some variables (such as particle shape, particle size distribution, and the degree of contact between explosive and bridgewire) that have been found to affect input characteristics, experimental verification of these characteristics is always necessary. If desired characteristics have been specified within close limits, it is well to be prepared to adjust one or another of the variables involved after tests of a preliminary sample.

5-2.4.3 EXPLODING BRIDGEWIRE INITIATORS

As pointed out in par. 2-3.4.3, exploding bridgewire (EBW) initiators are defined as those which fire only when subjected to electrical conditions conducive to explosion of their bridgewires. The initial charges of EBW initiators are secondary explosives such as PETN or RDX. Hence, they are relatively safe from initiation by direct application of heat and external mechanical influences **(im**pact or vibration) or from electrical input of most any kind except the highly specialized pulses for which they are designed.

If an EBW initiator is subjected to a gradually increasing current, the bridgewire can burn out at some point without exploding and initiating the explosive. The rate at which the current must rise (di/dt) to result in firing is an important characteristic of an EBW device. For typical EBW initiators, this rate must equal or exceed 10^9 A/sec. Remembering that this rate is equal to the quotient of voltage by inductance and that typical firing circuits have output voltages in the range of a few thousand volts, the maximum permissible inductance is of the order of a few microhenries, which is close to the minimum practical value for circuits usable by the military. The high rate of rise results in concentration in the outer layers of the bridgewire, and an increase in the effective resistance from the static value of a few hundredths of an ohm to a dynamic value of a few ohms. In addition to these electrical phenomena, the initiation of explosives by exploding bridgewires involves interactions of firing voltage and capacitance, bridgewire dimensions, melting point, boiling point, heats of fusion and evaporation, resistivity, coefficient of resistivity, heat capacity, surface tension in the liquid state, explosive composition, particle size and shape and the distributions thereof, charge dimensions and confinement, and some other factors. Hence, EBW initiators do not lend themselves to precise calculation[9].

5-2.4.3.1 BRIDGEWIRE DIMENSIONS AND MATERIALS

Clearly, the smaller the volume of a bridgewire, the less energy is required to cause it to explode. However, a given amount of energy in a given circuit will not necessarily result in increasingly vigorous explosions as the size of the wire is reduced. A smaller wire, for example, will generally vaporize sooner. If this occurs before the current approaches the maximum value, as determined by the circuit, most of the energy will be dissipated in an arc discharge, generally diffused in a volume much larger than that of the original wire. The resulting explosion may thus be less intense than that from a large wire. This effect, combined with the characteristics of practical firing circuits and the properties of explosives used, will cause the threshold firing energy or voltage of an EBW device to reach minima at optimum values of bridgewire diameter and length which have, unfortunately, not yet been defined.

Of the materials tested, platinum, gold, and copper have given the best results[**]. Nichrome, tungsten, and silver, under circumstances for which data are available, require more energy than the first named materials. Gold and platinum have been preferred because of their corrosion resistance.

5-2.4.3.2 EXPLOSIVE MATERIALS

PETN is, for the present, the mbst widely used initial charge material for EBW detonators. RDX and HMX, which are desirable because of their better thermal stability, are somewhat harder to initiate (see par. **2-3.4.3).**

5-2.4.4 FILM BRIDGE INITIATORS

Conductive films may be applied to the surfaces of insulators by a variety of techniques, including chemical precipitation; painting; drying of suspensions and solutions; writing, as with a pencil, crayon, or pen; plating; vacuum evaporation; sputtering; and spraying. Most of these techniques have been used at one time or other to produce bridges that can be heated or exploded to initiate explosive reactions.

5-2.4.4.1 INITIATION MECHANISM

The initiation mechanism of film bridge initiators is complex (see par. **2-3.2.2).** Hence film bridges cannot be designed by computation as can hot wire bridge initiators. Typical complications result from the fact that film thickness is much less uniform than is the diameter of a drawn wire and that various paths exist between the electrodes. Where the film is a semiconductor with a negative resistance coefficient, like carbon, variations

in film thickness and path length combine with the negative resistance coefficient to channel most of the current into one or a few preferred paths. Since the volume of material through which most of the current flows is only a small fraction of the film, initiators with carbon film bridges are the most sensitive in use.

Although some experimental results have been obtained with a variety of experimental film bridge initiators[1], the only type applied in standard fuzes has been the low-energy graphite bridge type.

5-2.4.4.2 GRAPHITE BRIDGE FILMS

Bridges of graphite bridge initiators are all made by essentially the same process. A droplet of a colloidal suspension of graphite in water is deposited on a surface that consists of two or more metal electrodes separated by, and often imbedded in, an insulator. The electrical and electrothermal characteristics of a bridge made in this manner are determined not only by such aspects of the design as spacing and configuration of the electrodes and specified dilution of the droplet but also by the manner of droplet application.

The input characteristics of graphite bridge initiators (both resistance and sensitivity) are determined, at least in part, by the chance distribution of the particles of graphite as they are deposited. Consequently, the item-to-item variation is quite large. The acceptable resistance range for Army items is 1000 to 10,000 ohms, while that for Navy items is 700 to 14,000 ohms. Generally, several hundred ergs of input energy are required for reliable initiation at potentials generally in excess of 100 V.

5-2.4.5 CONDUCTIVE MIX INITIATORS

By mixing explosives with metals or other conductive materials, mixtures can be prepared which are electrically conductive, and in which sufficient current density results in initiation of a self-propagating reaction of the explosive. The input characteristics are functions of electrode dimensions, spacing, configuration, particle size shape, distribution of each component of the mixture, and intimacy of the mixture, as well as its composition. Flaked or powdered metals as well as graphite and acetylene black have been used for the conductive component of the mixtures while both common primary and secondary explosives serve as the explosive component.

Conductive mix initiators are rarely used in fuzes. The permutations of the variables are so numerous that a systematic study of their results has not been completed. A number of these results are discussed in par. 2-3.2.2. In some cases, rather ritualized schedules of grinding, mixing, and loading are necessary to attain the desired characteristics[2].

5-2.4.6 SPARK GAP INITIATORS

Electric sparks of rather low energy content will initiate some explosives (see par. 2-3.4.2). The earliest electric blasting caps were spark gap or "high tension" caps. The high voltage necessary to fire spark gap initiators is still a limitation to their usefulness. As the gaps are reduced to lower the threshold firing voltage, the critical voltage varies so sharply with both gap length and electrode configuration that normal manufacturing variation makes input characteristics difficult to predict. This situation is not improved by the presence of a powdered explosive between the electrodes. For voltages above a few thousand volts, spark gap initiators can be made with more reproducible characteristics. Spark gap initiators are not presently used.

5-2.4.7 SQUIBS

From the standpoint of input, squibs are identical to other electric initiators. Since most squibs are wirebridge devices, they are designed like hot wirebridge initiators described in par. 5-2.4.2. The explosive is one of the flash charges listed in Table 5-1. Some squibs have a second charge of black powder

or similar material to initiate materials that are more difficult to ignite.

Squibs are used in pyrotechnic trains[3,14]. Initiators for propellants are also called squibs at times. However, these are larger components and should be called igniters. For design details on propellant trains, see Ref. 1.

5-2.5 THROUGH-BULKHEAD INITIATORS

The through-bulkhead initiator (TBI) consists essentially of three explosive input elements (see Fig. 2-11). The first of these, the initiator, can be any mechanical or electric detonator. It must be a detonator rather than a primer because a shock wave is required. The design of mechanical detonators is covered in pars. 5-2.1 and 5.2.3 while that of electric detonators is treated in par. 5-2.4. The key explosive elements of the TBI are the donor and acceptor charges separated by the bulkhead.

Rigorous design of TBI's has not yet been attempted, and all tests to date have used the Edisonian approach. However, some design guidance can be given. Initially tests were conducted to demonstrate the shock propagation through a thick barrier[5]. For the equations of shock wave propagation, see par. 2-2.2.

A typical TBI concept is shown in Fig. 5-7[16]. It is the initial configuration for the Saturn V launch vehicle where the requirement called for maintaining a firm seal after detonation that would withstand 10,000 psi pressure. The initiator in this instance is a length of detonating cord, donor and acceptor charges are both PETN, and body is type 303S stainless steel with the bulkhead 0.075 in. thick. The TBI was developed to initiate solid propellant rocket motors that are used during stage separation to control the ullage in the main propellant tanks and to provide retro thrust. The TBI ends are sealed so that the TBI will better withstand the temperature environment.

Any secondary high explosive can serve for donor and acceptor charges. PETN and RDX have been commonly used, the same explosive being used for both charges. The bulkhead material is usually dictated by the requirements of the housing material. The shape of the cavities has not yet been firmed. Full round cavities are not necessarily optimum anymore than full flat-bottom cavities are. The full round shape permits the bulkhead to be thinner because it produces a divergent shock wave.

A series of experiments served to evaluate various explosive densities and charge lengths as well as different bulkhead materials and thicknesses. Fig. 5-9[7] lists the parameters of two of the configurations. The significant pressures are defined as follows:

P_d = detonation pressure, atm

P_t = transmitted pressure, kpsi

P_a = shock pressure of acceptor charge at the 50% firing point, kpsi

Configuration A was tested but found to be of low reliability because the P_t/P_a ratio is less than unity. While configuration B was not tested, it is considered to be reliable because of its high pressure ratio.

5-3 OUTPUT

5-3.1 OUTPUT OF PRIMERS

The output of a primer includes hot gases, hot particles, a pressure pulse which, in some cases, may be a strong shock, and thermal radiation. Measurable quantities that have been used to characterize primer output include: the volume of the gas emitted, the impulse imparted to a column of mercury by the pressure pulse, the light output as measured by a photocell, the temperature rise of a thermocouple exposed to the output gases and particles, the ionic conduction between a pair of probes exposed to the output, the pressure rise in a chamber in

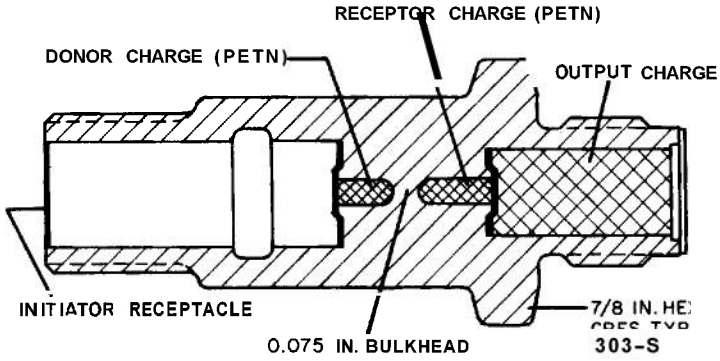

Figure 5-8. Initial TBI Configuration for Saturn V Launch Vehicle

which the output is confined, the propagation velocity of the air shock, the hangfire, namely the time lapse between supply of mechanical energy to the primer and initial primer output, the flame duration, the crushing of honeycomb elements, and the gasifying of inert polymers. Some of the more brisant primers emit pressure pulses of sufficient magnitude to give measurable results in the sand test and lead disk test (see par. 12-2.3.1). Each of these measurable quantities has been related to effectiveness in one or another application by experiment, theory, or intuition. However, no general quantitative relationship of value to a designer has been developed. The design of a primer for appropriate output must be based on precedent and the following generalities:

1. Both gaseous products and hot particles emitted by primers play important roles in ignition.

2. The effectiveness of the gaseous products in ignition increases directly with temperature and pressure. Since the pressure is related inversely to the enclosed volume, an increase in this volume or a venting of the system may call for primers of greater output.

3. It has been shown experimentally that the heat of an enclosed body of gas is distributed quite uniformly over the surface to which it is exposed'[8]. Thus, the insertion of baffles or the introduction of irregularities that increase the total surface, both inert and reactive, exposed to the primer gases may necessitate the use of a primer with more ouput energy.

4. Hot particles of solids or globules of liquids are particularly effective in the ignition of materials with high thermal diffusivities (such as those containing appreciable proportions of metal) or of those whose melting points are well below their ignition temperatures.

5. Hot particles and globules establish a number of reaction nuclei, rather than burning along a uniform surface. This action may be undesirable in short delay colums, or in propellant grains designed for programmed combustion. Where the particles or globules are large, or have high enough velocities to penetrate beneath the surface, serious problems may result.

6. The blast effects of pressure pulse and accompanying gas movement are both favorable and adverse in igniting by means of a primer. Although they result in more rapid heat transfer between gases and solid materials that are to be ignited, they may also "blow out the flame" by moving the hot gaseous products from contact with the combustible material.

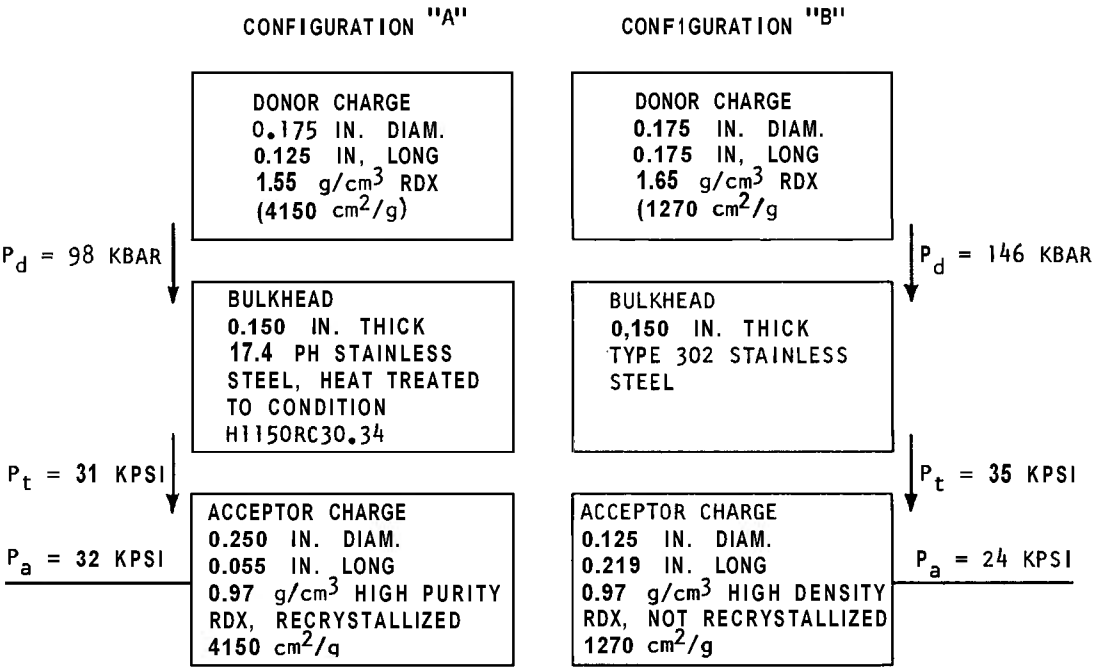

PRESSURE VALUES ARE TAKEN FROM THE RELATIVE SCALE OF THE PARAMETRIC TESTS

Figure 5-9. Comparison of TBI Parameters

7. In some applications, shock waves that are too strong may damage the structure of either reaction or inert material in such a manner that control of system behavior is lost.

8. The reproducibility of the time of a delay element is related to the reproducibility of the output of the primer which initiates it. The times of short obturated delay elements are particularly sensitive to variations in primer output.

9. When a primer is used to drive a firing pin (this combination is used where the sensitivity of a stab primer is needed in combination with a delay of the obturated type that requires a percussion primer), the important aspect of primer output is the momentum it is capable of imparting to the firing pin. Where the output gases are reasonably well contained, the impulse as measured in the gas volume and impulse machine is a reasonable gage of output. Where the system is essentially vented, blast type phenomena, perhaps as indicated in air shock velocity or the lead disk test, are more significant.

5-3.2 OUTPUT OF DETONATORS

5-3.2.1 PARAMETERS OF DETONATOR OUTPUT

As its name implies a detonator is intended to induce detonation in a subsequent charge. The two features of its output which are useful for this purpose are the shock wave it emits and the high velocity of the fragments of its case.

Although it is possible to envision detonator designs that are effective in inducing detonation without detonating themselves, the output effectiveness of detonators of current designs is directly related to the quantity of the explosive which detonates.

and to the vigor of this detonation. These quantities are somewhat less predictable than in most other components because the transitions from burning to detonation and from low order to high order detonation take place in the detonator.

These transitions, as pointed out in par. 2-2.1, can require anything from a hundredth of an inch to the whole length of a detonator, depending upon such factors as loading density, composition, particle size, confinement, and column diameter. However, recent developments in lead azide production have resulted in materials in which these transitions require so little explosive that the output of a detonator can be predicted with a fair degree of confidence.

The effective output of a detonator includes factors of pressure, duration, and area over which the pressure acts. Clearly a simple product of these quantities is inadequate as a characterization because a low pressure of either long duration or large extent obviously would be ineffective.

5-3.2.2 MEASUREMENT OF DETONATOR OUTPUT

Detonator output is difficult to characterize except in terms of the characteristics of a subsequent charge. This is to be expected because the transmission of detonation involves the interaction of quantities associated with the acceptor as well as with the donor.

Detonator output is measured by means by gap or barrier tests, sand test, copper block test, lead disk test, steel plate dent test, Hopkinson bar test, and in terms of the velocity of the air shock produced. These tests are described in par. 12-2.3.1.

No known measurement technique yields a quantitative measure of the output of an individual detonator which is usable, without reservation, as a criterion of the effectiveness of the detonator.

5-3.2.3 EXPLOSIVES USED IN DETONATORS

In the past, a detonator was considered to be incomplete unless it contained three charges of different explosives: a priming or flash charge for initiation, an intermediate charge in which the transition from burning to detonation takes place, and a base charge to maximize output. Recent trends have been toward the combination of these functions, but separate discussion is still appropriate. Priming and flash charges are discussed in par. 5-2 under input, priming compositions are listed in Table 5-1.

5-3.2.3.1 INTERMEDIATE CHARGES

The properties of a primary explosive which promote the growth of detonation have not been defined quantitatively. From a practical point of view, the superiority of lead azide over other aviailable explosives in this respect is such that no other explosive is used as the intermediate charge in a current detonator for fuze use (except in exploding bridgewire applications).

There are four forms of lead azide in current use[19] :

1. Dextrinated lead azide, the first US standard service type, is made by precipitation in the presence of dextrin. MIL-L-3055.

2. Colloidal lead azide is unadulterated lead azide of very small particle size (3-4 μ). MIL-L-3055.

3. PVA (polyvinyl alcohol) lead azide is made by precipitation in the presence of polyvinyl alcohol.

4. RD-1333 lead azide, a British development, is made by precipitation from a solution of sodium carboxymethyl cellulose. MIL-L-46225 (MU).

Dextrinated lead azide has a large lot-to-lot variation in the growth of detonation, partic-

ularly at the loading densities necessary for the output potential of this material. The beta form of lead azide is highly sensitive and unstable and is suspected of spontaneous detonation (see par. 2-3.4.5). RD-1333 and PVA lead azides are superior to the other forms in both chemical and functioning characteristics, and are preferred in modern design.

Although silver azide is an alternate material, it is not now commercially available and, furthermore, is not compatible with some presently used materials. In exploding bridgewire detonators, the function of the intermediate charge (as well as initial charge) is served by an exploding wire.

5-3.2.3.2 BASE CHARGES

It has been the practice to include base charges of booster type explosives at the output ends of detonators. The base charges of most electric detonators in current production are PETN. Those of flash and stab detonators of early designs are tetryl and of more recent designs, RDX. The difference between electric and nonelectric items is that the former evolved from commercial electric blasting caps, in which PETN is widely used, while the latter have a much longer history of development within military agencies. A number of experimental electric detonators have been made with RDX and HMX base charges to obtain better stability at high temperatures. However, the improvement in this respect was not as great as anticipated[20]. Meanwhile, the superiority of lead azide to any of these materials in thermal stability has combined with the considerations discussed in the paragraphs that follow to cause a trend toward the elimination of explosive base charges.

The limitation of the size of a base charge is generally that of the volume available. Thus, one criterion of the relative effectiveness of a base charge explosive is its volumetric heat of detonation. Another criterion is the detonation pressure. (Detonation velocity has often been used as a criterion but is probably involved mainly as a factor in the detonation pressure.) In Table 5-5[a] volumetric heats of explosion and detonation pressures of lead azide and various base charge explosives are given.

In general, the comparisioris made for the various explosives pressed at 10,000psi are of more practical significance than those made for voidless materials. Most detonators are loaded at pressures in this range which is a good compromise value for several practical reasons. Colloidal, PVA, or RD-1333 lead azide, loaded in place of a base charge at pressures of the order of 25,000 psi, may be expected to result in detonators similar enough in output to detonators of similar design with base charges of booster explosives to be indistinguishable from them. Some investigators report that RD-1333 lead azide and PETN base charges, loaded in the same volumes, have equal output. Others show an increase in output as a PETN base charge displaced lead azide[21]. The lot-to-lot variations in loading characteristics of both PETN and lead azide- probably account for part of this disagreement. Variations between test procedures and output criteria used by various investigators might also affect relative as well as absolute output of variously loaded detonators.

In substitution of base charge explosives, bear in mind that RDX and HMX are less sensitive than PETN. An intermediate charge that is adequate for reliable high order initiation of PETN may not be sufficient for maximum or reproducible results with these materials. Experimental investigations of such substitutions should be made in full cognizance of the effects of confinement on the growth and transfer of detonation, as outlined in pars. 2-3.1 and 3-1.2. Tests that are carried on with better confinement and consolidating pressures than occur in service may be misleading.

TABLE 5-5

HEATS OF EXPLOSION AND DETONATION PRESSURES

Explosive	Volumetric Heat of Explosion		Detonation Pressure	
	Voidless, cal/cm^3	Pressed at 10,000 psi, cal/cm^3	Voidless, kbar	Pressed at 10,000 psi, kbar
Lead Azide (dext.)	1450	970	317	158
Lead Azide (pure)	1760	1100	394	161
Tetryl	1900	1720	276	221
PETN	2440	2260	327	264
RDX	2330	2050	354	257
HMX	2580	2070	414	261

5-3.2.3.3 EXPLOSIVE QUANTITIES AND DIMENSIONS

The total energy released by a detonator is the sum of the products of the heats of detonation and the quantities of the various explosives used. Of this energy, only that from the explosive which detonates high order is effective output. In general, this includes the base charge and part of the intermediate charge. Where the intermediate charge is dextrinated lead azide, the fraction that detonates may vary appreciably with loading density, confinement, and lot-to-lot variations in the lead azide. The azide that actually detonates must be sufficient to initiate the base charge. In current detonator designs, this is assured by the use of at least 100 mg of lead azide. A rule of thumb calls for a 0.10 in. minimum column height. The necessary quantities of such materials as PVA, colloidal, and RD-1333 lead azide are considerably smaller than this. At this time, design practices have not developed to a point where a conservatively reliable minimum quantity of such materials can be specified.

Most detonators are considerably longer than their diameters. This configuration is dictated by both fuze and detonator design considerations.

5-3.2.3.4 LOADING DENSITY OF EXPLOSIVES

The growth of detonation is most rapid in explosives loaded at densities well below those usually used in military items. On the other hand, the effective output of stable detonating explosives increases sharply with density. Thus, a given quantity of intermediate or base charge explosive has a maximum effective output at some optimum density. The value of this optimum is affected by the composition and particle size of the explosive, the vigor with which it is initiated, the dimensions of the charge, and the confinement afforded by surroundings. For the conditions in the usual fuze application, the optimum density for dextrinated lead azide—and normally used base charge materials—is obtained by loading at between 10,000 and 20,000 psi. As indicated in the foregoing, the optima for PVA and RD-1333 lead azide are much higher. For most lots of these materials, in fact, the optimum loading pressure is beyond practical limits of production tools.

The optimum density for the initial charge of PETN in an exploding bridgewire detonator is less than 1 g/cm^3. For some such devices, it has been found advantageous to load by increments at varying densities, increasing in stages, as for example, 1.0, 1.2, 1.4, and 1.6 g/cm^3. Such gradual increases are less necessary in PETN than in RDX and other less sensitive explosives.

5-3.2.3.5 CONFINEMENT OF EXPLOSIVES

Confinement is an important factor in both the growth of detonation (see par. 2-3.1) and

the effective output of stable detonation (see par. 3-1.2). The confinement of a detonator is somewhat difficult to describe in quantitative terms, because different properties of the confining structure are involved in the promotion of detonation growth and in augmentation of the output of stable detonation, and because of the relative complexity of the structure and configuration of detonators. The confinement afforded by surrounding fuze structures as well as that of the detonator itself can contribute significantly to the effective output of a detonator.

In the early stages of the growth of detonation, the detonator case, closure, and the surrounding structure should be considered as a container of high pressure gases. At the earliest stages, ***tightness*** (the absence of leaks) is the most important factor. As the growth progresses, the strength of the container becomes more important while the importance of leaks diminishes.

As the detonation approaches its stable rate, the pressure exceeds the bursting strength of any feasible container and confinement is mainly a matter of inertia—the confining wall is to reflect as much energy back into the explosive as possible. In relatively thin-walled containers, the confinement afforded by the inertia of the case is related to the weight ratio of case to charge. For heavy walls (where the thickness equals or exceeds the charge radius), the shock impedance of the surrounding material (Table 3-1) is the best criterion of its effectiveness in confinement.

The confinement afforded by any component is related to its proximity to the explosives. For example, a heavy steel case surrounding a thick plastic charge holder contributes little to the confinement of the explosive inside the charge holder.

The rearward confinement afforded by the plug of an electric detonator can contribute significantly to its ouput. Some of the smaller electric detonators have appreciably greater output than have stab or flash detonators of nearly identical loading.

5-4 CONSTRUCTION AND FABRICATION

5-4.1 INITIATOR CUPS

Initiators usually consist of simple cylindrical metal cups into which explosives are pressed and various inert parts inserted. MIL-STD-320[h] describes design practices and specifies the standard dimensions, tolerances, finishes, and materials for initiator cups. In general, all initiator designs should conform to this standard. However, it is not the intent of the standard to inhibit the development of new concepts so that an occasional departure from the standard may be necessary for special circumstances.

An example of a deviation from standard design is a coined bottom cup. For flash and stab initiators, it is desirable for the input or sensitive end to be as thin as practical. Cups with standard holes are used in which the holes are covered from the inside with thin metal disks. However, this construction results in a sealing problem at both ends. Hermetic sealing of a thin disk in aluminum cups by ultrasonic welding has been achieved in initial experimental work. An alternative method, which has been used extensively in recent years, is use of a cup in which the central portion of the bottom is coined to an appropriate thickness (see Fig. 5-10). Another example of a special-purpose shape is the concave bottom of the "Mini" detonator (Fig. 5-4) that was designed to obtain a shaped charge effect. The optimum thickness and shape of the closure at the output end is known to affect the ability of a detonator to initiate the next element in the explosive train. Details in defining the optimum configuration have not yet been established.

After drawing, cups are punch trimmed. In this process, the cup is expanded by means of a punch, the diameter of which is slightly larger than the outside of the cup, to the point at which it is to be trimmed. The cup is

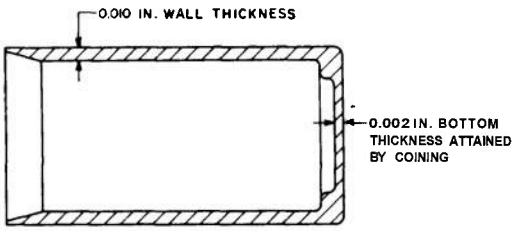

Figure 5-10. Coined Bottom Cup

then forced through a die that fits the punch, trimming off the expanded part (Fig. 5-11).

Initiators are usually closed by crimping with a succession of conical crimping tools (Fig. 5-12). Cups for flat ended cylindrical items should be made 0.030 in. longer than the finished length to allow for crimping.

In selecting one of the standard cup materials from MIL-STD-320, it is important to consider compatibility of metals with one another and with the explosives used (see par. 4-3.1).

5-4.2 EXPLOSIVE LOADING

Initiators are loaded by pressing powdered explosives into the cup. For details of loading procedures and considerations, see par. 10-3. For flash and spotting charges of electric initiators, see par. 5-4.4.5.

Most fuze initiators are loaded at between 10,000 and 20,000 psi. Exceptions include percussion and stab priming mixtures and delay compositions which may be loaded at 30,000 to 80,000 psi and the flash charges of electric initiators which are loaded at 3000 to 5000 psi, or sometimes are "buttered" into a cavity in the form of a paste, including solvent and binder.

As suggested in par. 5-3.2.3.4, experimental evidence indicates performance advantages may result from the use of loading pressures between 40,000 and 80,000 psi with **PVA,** colloidal, and RD-1333 lead azide.

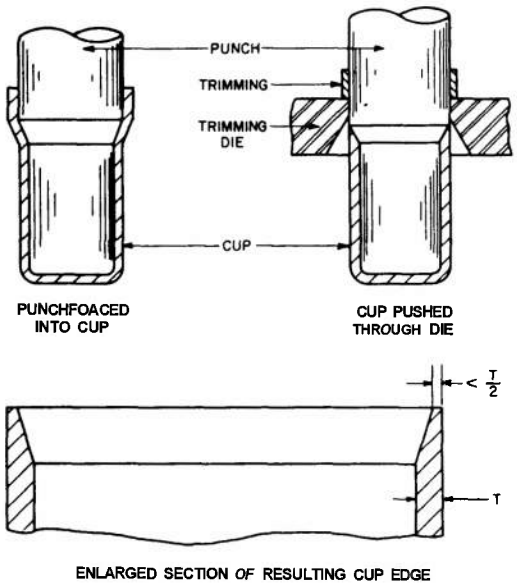

Figure 5-11. Punch Trimming of Initiator Cups

Where a charge of one explosive is longer than its diameter, the usual practice is to load it in increments not over one diameter long. Shorter increments are sometimes used for a precise control of density.

The base charge of electric detonators is loaded first, the initiator plug forming the closure. The usual practice for stab and flash uetonators is to load the sensitive end first. Some reasons for this practice are:

1. "Press blows" are most probable when pressing the priming mix. Both hazards and resulting damage are minimized if this is the only material present.

2. The greatest sensitivity of stab mixtures is obtained when they are loaded at pressures higher than those usually used for intermediate and base charges. By loading this material first, the charge may be loaded at any appropriate pressure without overpressing the other charges.

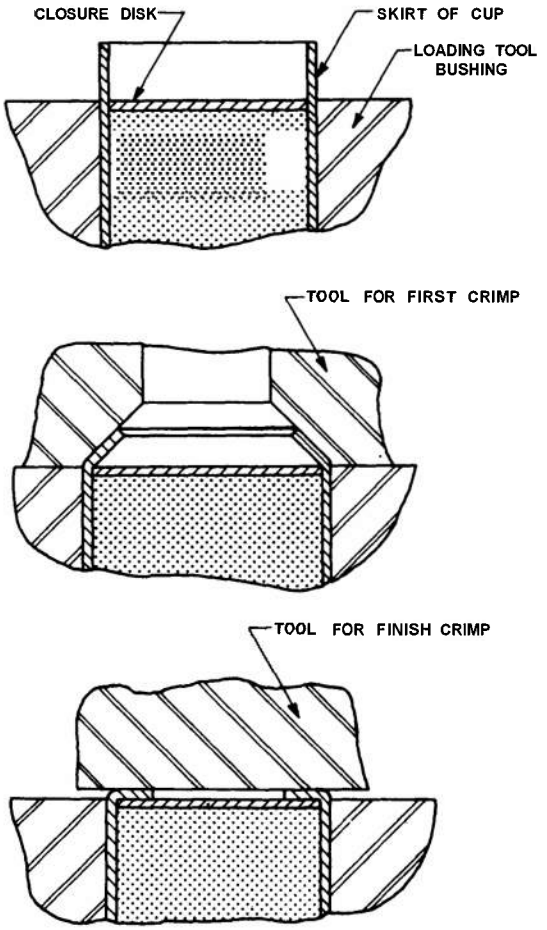

Figure 5-12. Initiator Cup Crimping

3. The priming mix, which is most vulnerable to moisture and other atmospheric gases, is farthest from the crimped end (in a solid bottom cup).

4. The base and intermediate charges have their density gradients in the most advantageous direction. The greatest density of a consolidated charge occurs at the punch interface end. The reaction propagates from the low density end, which is most sensitive to flame or detonation initiation, to the high density end, which has the most effective output.

5-4.3 MECHANICAL INITIATORS

5-4.3.1 STAB AND FLASH INITIATORS

Stab and flash initiators are the simplest explosive devices, consisting of a cup filled with the explosive charges. Where a pierced cup is used, the opening is covered with a disk. From the standpoint of compatibility, the best disk material is the same as that of the cup. However, thickness and material of the disk may be dictated by sensitivity requirements. Paper disks, usually supported by metal washers, have been used for the closure of relays where there is no sealing requirement because most of the sensitivity gained by the use of paper is lost if the paper is coated with sealant. The loading tool base has a protrusion to fit the pierced hole so as to form, with the remaining edge of the bottom, a flat surface for the support of the disk. Disks for the closure of the output end are, in general, somewhat heavier to make crimping more satisfactory. A commonly used thickness is 0.005 in.

It is the usual practice to paint the ends of stab and flash initiators with a lacquer type sealant. Although waterproof seals have been shown to be effective in most instances, moisture proofing according to the Temperature and Humidity Cycling Test[j] is seldom achieved.

5-4.3.2 PERCUSSION PRIMERS

A percussion primer consists of a cup, a small charge of priming mix, and an anvil. A disk of paper or foil is usually assembled between the primer charge and the anvil. The primer cup has an interference fit with the hole into which it is assembled. Most anvils are held in place only by a force fit and protrude beyond the edges of the cups. The final seating of the anvils takes place as they are assembled by pressing in place. This reconsolidation pressure reduces the height of the primer mix between anvil and cup to a minimum. Adequate square shoulders should be provided for the anvil support.

The relatively thin layer of priming mix used in percussion primers makes it possible to load these items wet with the expectation that they can be dried in a reasonable amount of time. Most of the primers used for small arms are loaded wet (as a paste).

5-4.4 ELECTRIC INITIATORS

5-4.4.1 INITIATOR PLUGS

Electric initiators differ in construction from mechanical initiators mainly in that they include plug assemblies that are essentially the means of supporting and insulating a pair of electrodes. The electric firing stimulus is carried through these electrodes to bridges or other means of converting electric energy into a form to which the explosive will respond.

Most plugs are molded of phenolic material or glass-to-metal seal heads. However, to alleviate the hazard of premature initiation or degredation due to spurious electrical signals (i.e., RF energy, lightning, or electrostatic charges), other materials have been substituted for the phenolic plug. These materials include powdered iron and Mn-Zn ferrites[22,23]

The plug may have a front region of reduced diameter onto which a ferrule or charge holder is forced to serve as a receptacle into which the flash charge is pressed or "buttered" (see Fig. 5-3). For wire lead assemblies, two wires are imbedded in a phenolic plug with the plug acting as the insulator. The button type assembly consists of two concentric stainless steel components, pin and ring shaped plug, cemented together and insulated from one another by a thin layer of synthetic resin adhesive. In addition to their ruggedness and adaptability to certain fuze designs, the plugs provide rearward confinement that significantly augments the output of the initiators. Glass-kovar plug assemblies and other metal ceramic seals provide a basis for the development of hermetically sealed units. Such assemblies have found widespread application in explosive actuated devices, discussed in par. 9-1.

5-4.4.2 BRIDGING TECHNIQUES

Most electric initiators are wire bridge items, and most of the remainder are film bridge initiators. Several techniques have been developed to apply wires to the electrodes of the wire bridge type.

5-4.4.2.1 SOLDERED BRIDGES ON RAISED TERMINALS

Soldering a bridgewire to a raised terminal is, of course, the obvious way to connect one wire to another. (See M36A1 Detonator, Fig. 5-3.) For quantity production, a large number of plugs are lined up in a fixture and a length of the bridging wire is stretched so as to bisect the tips of the terminals. The group is bridged by touching each tip with a properly tinned soldering iron. Subsequent operations include removal of all flux, trimming the ends of each bridge at the outside edges of the terminals, and pinching the terminals together to put a little slack in the wire. Although a hand process, it is reasonably fast. One of the principal disadvantages of this technique is that the suspended wire is easily broken by press loading of the explosive.

5-4.4.2.2 FLUSH SOLDERED BRIDGES

This fastening technique is similar to that with raised terminals, except that the lead wires are ground flush with the face of the plug. Explosives may be pressed against such a bridge. However, buttered or spotted charges may not contact a flush bridge over as large a fraction of its surface as they would cover a bridge on raised terminals.

5-4.4.2.3 WELDED BRIDGES

Where soldering is impractical, bridgewires may be resistance welded. In addition to eliminating the soldering flux, this technique reduces the number of metals involved to a minimum. The welding of bridgewires, in its

ultimate development, is ideal for high rate automatic production. Button type plugs when used with wire bridges usually are bridged by welding.

5-4.4.2.4 GRAPHITE FILM BRIDGES

Plugs for graphite bridge initiators are made by molding the plastic about a twisted pair of enameled wires, and then grinding the surface flush. This leaves a plastic surface with two metal islands separated by twice the thickness of the enamel. A droplet of a diluted colloidal suspension of graphite in water is applied over the point of closest approach of these islands and allowed to dry. While hand daubing of graphite film remains something of an art, a recently developed automatic bridging machine has permitted the application of fairly uniform films[24].

5-4.4.3 BRIDGEWIRE MATERIALS

Bridgewire is selected first for its resistivity. Next its adaptability to the bridging process and its compatibility with the explosive to be used must be considered. The very small size of the usual bridgewire results in a situation where an amount of corrosion, which might be negligible elsewhere, is sufficient to part the wire. These considerations limit the choice to relatively few materials (see Table 5-3).

Gold, platinum, and platinum-iridium are nearly impervious to chemical attack, and are relatively easy to solder. However, the low tensile strengths of these materials makes them difficult to handle without breakage in sizes much under a thousandth of an inch. They are extensively used in EBW devices (gold, however, can form a solid solution with certain types of solder; hence care must be taken here). Nichrome and Tophet C are similar to stainless steel in their corrosion resistance and compatibility characteristics. They can be soldered if plated, but usually are welded. Their higher strength, combined with favorable electrical properties, has resulted in their use in most hot wire initiators, in diameters down to about 0.4 mil. Its extremely high tensile strength makes tungsten the preferred material for extremely small bridgewires. It is available in sizes down to 0.1 mil and is not too difficult to work with in these sizes.

5-4.4.4 SPARK GAP PLUGS

A plug for a spark gap initiator is like a plug used for graphite film devices without the graphite film. The gap between the terminals is about 0.001 in. or less.

5-4.4.5 FLASH AND SPOTTING CHARGES

The explosive in intimate contact with the electric bridge is called a spotting charge. Only a small qunatity (on the order of 5 mg) is used. It is painted on the bridgewire and wire terminals. Milled lead styphnate or colloidal lead azide mixed with nitrocellulose lacquer currently are used as spotting charge. For flush bridging, dry pressed flash charges have been used in a number of initiators. The pure explosive and uniform density of pressed flash charges makes them more reproducible, particularly in functioning time.

The resistance of graphite film bridges is stabilized to some extent by covering them with a relatively thin layer of a lead styphnate lacquer mixture that is applied as a meniscus to the plug surface. Such a charge, known as a spotting charge, is used on some wire bridges as well as on most graphite film bridges. It has been found that faster functioning can be obtained by the use of lead azide, either milled or colloidal.

A ferrule usually is used to contain part of the next or intermediate charge of lead azide. It also provides some protection to the bridgewire during assembly of the loaded plug into the cup containig the base and other part of the intermediate charge.

REFERENCES

a-k Lettered references are listed in the General References at the end of this handbook.

1. AMCP 706-270, Engineering Design Handbook, *Propellant Actuated Devices.*

2. V. E. Voreck and E. W. Dalrymple, *Development of an Improved Stab Sensitivity Test and Factors Affecting Stab Sensitivity of M-55 Detonators,* Report TR 4263, Picatinny Arsenal, Dover, N.J., June 1972.

3. MIL-1-23659 (Wep), *Initiators, Electric, Design and Evaluation of,* Dept. of Defense, 18 March 1963.

4. R. H. Stresau, L. D. Hampton, and J. Kabik, *Firing Characteristics of Electric Initiators Made by the Spray Metal Process,* Memorandum 10771, Naval Ordnance Laboratory, Silver Spring, Md., 30 March 1950.

5. *Handbook of Chemistry and Physics,* The Chemical Rubber Publishing Company, Cleveland, 45th Ed., 1964-1965.

6. G. W. Peet and L. F. Gowen, *Evaluation Test Results on Service and Experimental Squibs,* NAVORD Report 6061, Naval Ordnance Laboratory, Silver Spring, Md., 4 March 1958.

7. W. K. Meyer and R. H. Stresau, *Initiation Times of Various Primary Explosives,* NAVORD Report 2644, Naval Ordnance Laboratory, Silver Spring, Md., 14 October 1952.

8. L. A. Rosenthal, *Electro-Thermal Equations for Electro-Explosive Devices,* NAVORD Report 6684, Naval Ordnance Laboratory, Silver Spring, Md., 15 August 1959.

9. *Exploding Bridgewire Surveys,* Journal Article 30.0 of the JANAF Fuze Committee, 23 October 1963 (AD-831 831).

10. W. G. Chace and H. K. Moore, *Exploding Wires,* The Plenum Press, New York, 1959.

11. W. M. Slie, *An Insensitive Substitute for Graphite Bridge Detonators for Laboratory Evaluation of Fuze Explosive Trains,* NAVORD Report 4512, Naval Ordnance Laboratory, Silver Spring, Md., 6 February 1957.

12. *The Use of Conductive Mixes in Electro-Explosive Devices,* Journal Article 48.0 of the JANAF Fuze Committee, 3 May 1967 (AD-829 731).

13. TM 9-1370-200, *Military Pyrotechnics,* Dept. of Army, September 1966.

14. AMCP 706-188, Engineering Design Handbook, *Military Pyrotechnics, Part Four, Design of Ammunition for Pyrotechnic Effects.*

15. Robert L. Wagner, *Shock Initiation Through A Barrier,* Report TR 3085, Picatinny Arsenal, Dover, N. J., September 1963.

16. L. W. Corwin and C. S. Greenough, "Development of the Saturn V Thru-Bulkhead Initiator", in *Proceedings of the 6th Symposium on Electroexplosive Devices,* The Franklin Institute Research Laboratories, Philadelphia, Pa., July 1969, pp. 1-4.1 to 1-4.22.

17. W. B. Freeman, "Through Bulkhead Initiator Design Margin Study", in *Proceedings of the 6th Symposium on Electroexplosive Devices,* The Franklin Institute Research Laboratories, Philadelphia, Pa., July 1969, pp. 2-12.1 to 2-12.18.

18. G. J. Bryan and E. C. Noonan, "Energy

Requirements for the Ignition of Seven Solid Explosives", Proc. Royal Society, Series A, Mathematical and Physical Sciences, **246,** 1245 (1958).

19. Robert L. Wagner, *Lead Azides for Use in Detonators,* Report TR 2662, Picatinny Arsenal, Dover, N. J., January 1960.

20. R. L. Wagner, *Development of a Modified M47 Detonator Having Improved Cook-Off Characteristics,* Report TR 2519, Picatinny Arsenal, Dover, N.J., June 1958.

21. W. Slie, *A Study of Output of Detonators Versus Internal Design Factors of Limited External Dimensions*, NAVORD Report 3593, Naval Ordnance Laboratory, Silver Spring, Md., 10 December 1953.

22. *RF Attenuation of Initiators,* Journal Article 46.0 of the JANAF Fuze Committee, 3 May 1967 (AD-828 308).

23. AMCP 706-235, Engineering Design Handbook, *Hurdening Weapon Systems Against RF Energy.*

24. J. F. Heffron and Paul F. Mohrbach, *Automatic Bridging Mechanism for Electric Detoiiators (U),* Report F-A2352, The Franklin Institute, Philadelphia, Pa., May 1961 (AD-326 667) (Confidential report).

CHAPTER 6

DELAY ELEMENTS

6-1 DESCRIPTION

6-1.1 FUNCTION AND CONSTRUCTION

Many tactical situations call for the introduction of a time delay between an input stimulus and firing. A variety of mechanical and electrical devices has been employed to delay the firing of explosive materiel[g]. However, we are concerned here with the prolongation of the burning phase to provide this delay. As pointed out in par. 2-2.1, burning forms an important part of the growth of detonation. Hence, it is one of the simplest means for providing delay. It is usually desirable to interpose a column of a special delay material in which the rate of burning is more readily controlled than in material predisposed to the growth of explosion. Since burning rates are affected by such conditions as pressure and temperature and their gradients, it is necessary to take these effects into consideration when designing initiators for delay columns and selecting inert components in which they are housed.

In its barest essentials, a delay element is a metal tube with an initiator (a primer) at one end (see par. 5-1.3), a delay column in the middle, and a relay or other output charge at the other end. In addition, depending upon the application and the delay material used, the element may include baffles, igniter mixes at one or both ends of the delay, a housing, and provision for internal free volume. Delay elements are subdivided according to construction into the two main divisions of obturated (sealed) and vented. Representative delays covering various time ranges have been compiled in a compendium[1].

6-1.2 DELAY TYPES

6-1.2.1 OBTURATED (SEALED) DELAYS

Obturated delay elements are so constructed as to retain all g a ~emitted by the initiator and the delay element until the relay or other base charge explodes. This class includes also the so-called "internally vented" delays[2].

Advantages of obturated delays include the inherent independence of these necessarily well sealed units from effects of pressure or humidity of the ambient atmosphere, and the absence of fumes that might have harmful effects on other components of a system. Obturation also helps in the design of short delays because the resulting increase in pressure increases the burning rate.

Obturated delays are either percussion or electrically initiated. The principal use of percussion primers in explosive trains is for the initiation of delay elements. In this application, their main advantage over stab primers is their adaptability to obturated systems. A typical percussion initiated obturated delay system is shown in Fig. 6-1". Note the heavy construction, to contain the pressure, and the expansion chamber. Some delays contain baffles beyond the primer to prevent erratic delay times caused by penetration of the delay column by hot primer particles, erosion by the action of the gas stream, or cracking by the shock wave.

The obturated delay elements that are electrically initiated are of two types. Some are essentially the same as percussion initiated

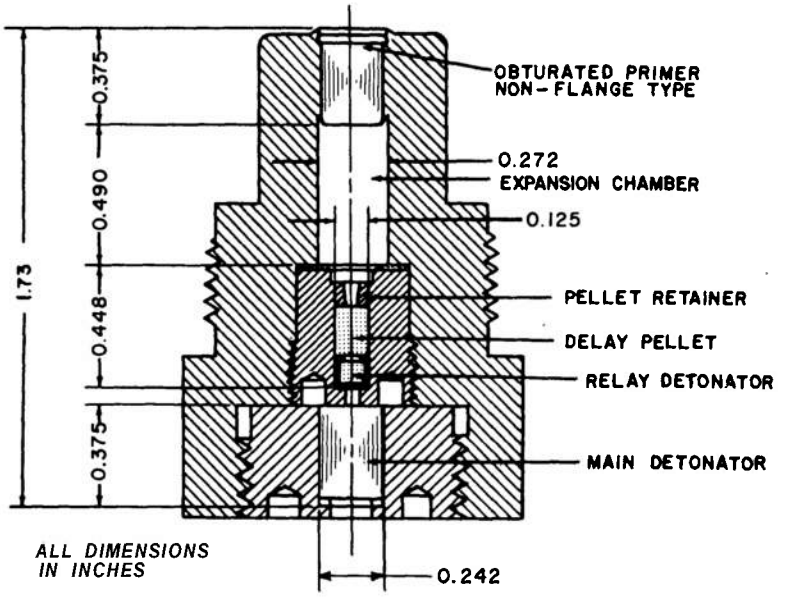

Figure 6-1. Obturated Delay Element of Bomb Fuze, ANM100A2

items with electric initiators in place of the percussion primers. Others are military adaptations of commercial delay blasting caps. The MARK *35* Detonator (Fig. 6-2[a]) is an example of such an adaptation. The delay powder is loaded, at bulk density, into a lead tube of larger than the intended finished diameter. The tube is then drawn to size, consolidating the explosive.

In the Electric Delay Detonator T65 (Fig. 6-3[3]) advantage is taken of the small size of spotting charges of recently developed electric initiators and of the modern gasless delay compositions to eliminate baffle and air space. There may be some question as to whether the T65 remains obturated throughout its delay period because the gas produced is enough to cause high pressure. Occasional fast times observed during development of T65 Detonators indicate that those which have satisfactory delay times do so only because they leak. However, the advantage of a sealed unit in storage is realized.

6-1.2.2 VENTED DELAYS

Vented delays have openings through which gases may escape. As delays become longer, the amount of gas they produce and consequently the internal volume needed in an obturated delay element increases to a point where the units become too bulky. In practice, before this point is reached, vented delays are used. These designs are usually more reproducible in functioning time than obturated delays because the tolerances in internal volume, size of priming charge, and gaseous impurities in the delay element have a cumulative effect of varying pressure and, hence, burning rate of the delay columns of obturated items.

Vents must be kept closed until the devices are fired to protect primer and delay column from moisture and other atmospheric deterioration. Fig. 6-4[a] shows two means for sealing vents. (A) covering them with disks, and (B) providing a soft plug to blow out under the action of the primer.

6-1.2.3 RING-TYPE DELAY

The ring-type delay is a special type of vented delay and is therefore discussed sepa-

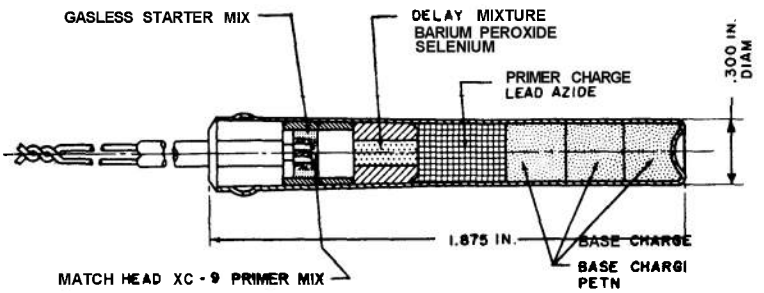

Figure 6-2. Electric Delay Detonator, MARK 35 MOD 1

rately. The delay consists of a column of black powder which is wound through the fuze cavity (Fig. 6-5[4]). The ring-type delay is generally so large as to comprise a large part of a fuze. The delay time of the M54 Fuze can be set at any desired value from 0.4 to 25 sec by rotating the calibrated ring, thus varying the length of the delay train which must be traversed by the flame between the primer and the output charge.

6-1.2.4 DELAYS ACHIEVED BY METHODS OTHER THAN CONTROLLED RATE BURNING

Ignition of one charge by another may be delayed by control of the heat transfer process. An experimental design in which primer and output relay were separated by a baffle with relatively small ports, to delay initiation of the relay until sufficient gas has passed through the ports, was not successful[5].

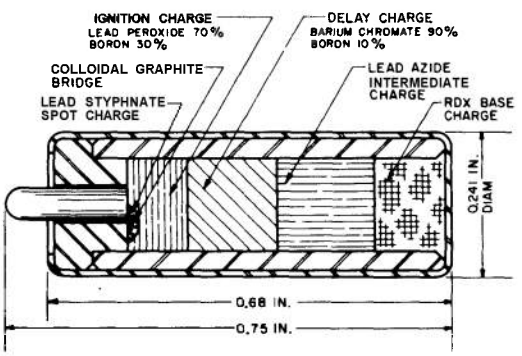

Figure 6-3. Electric Delay Detonator, T65

The pressure evolved by burning black powder can be used to give delays in the order of 1-6 msec. The principle involves a rapid build-up in pressure and terminates in the rupture of a disk. Designs based on this principle can be vented or obturated. Fig. 6-6[a] shows a delay based on this principle, using a vented type with baffle.

6-2 DELAY COMPOSITIONS

6-2.1 GAS-PRODUCING DELAY CHARGES

6-2.1.1 LOADING PRESSURE

Since the burning of gas producing materials depends upon the transfer of heat between the gaseous reaction products and the solid, the burning rate is a direct function of pressure. Thus, the delay times of such delays are greatly influenced by all factors that affect the gas pressure at the burning surface. The burning surface, of course, is all of the surface exposed to the gas, including that of

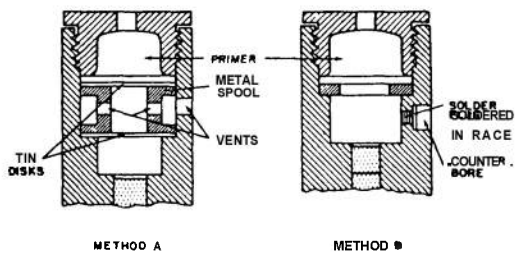

Figure 6-4. Sealing Methods for Vented Delays

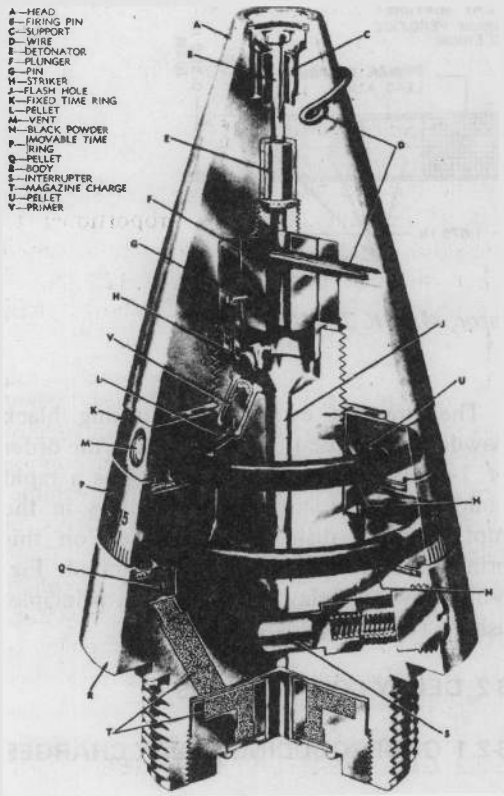

Figure 6-5. Fuze M54

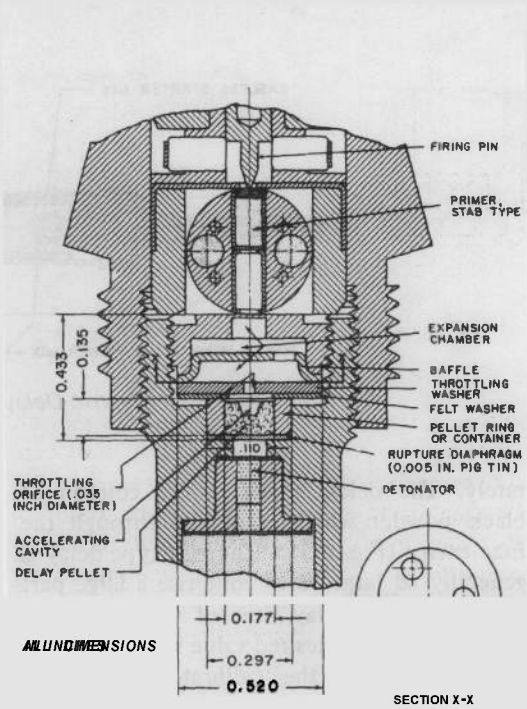

Figure 6-6. Pressure Type Delay

pores and cracks that the gas may penetrate. The largest class of gas producing delays are black powder elements[a].

Reproducible behavior of any delay requires that it burn as a continuous homogeneous substance. Porosity can result in a discontinuous relationship between interface pressure and burning rate. Black powder delays therefore are loaded at 60,000 psi or more. When a long column is required, it is pressed in increments, each pellet being no longer than its diameter (see par. 10-3.1.2).

6-2.1.2 PELLET SUPPORT

As a gas producing delay burns, the surface in frictional contact with the walls diminishes. In addition, for obturated (sealed) delays, the pressure increases as burning progresses. The point at which a cylindrical pellet would break free and initiate the relay would be determined by such random considerations as surface roughness. The time of breakthrough is made more definite by pressing an acceleration cavity in the output end of the pellet. The pellet is supported by a washer or the relay detonator cup (Fig. 6-7[a]).

6-2.1.3 EFFECTS OF MOISTURE AND TEMPERATURE

The effect of moisture on the burning rate of black powder is quite complex. For this reason, black powder delay elements must be kept dry. Effects of temperature extremes on performance of black powder delay elements vary appreciably from one delay to another. The spread of data almost invariably increases at extreme temperatures. It may be suspected that these variations are related to subtle design details.

6-2.1.4 OBTURATED DELAYS

In an obturated system, the pressure in the

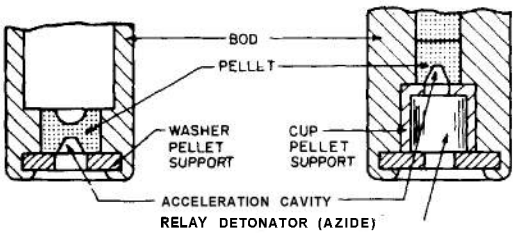

Figure 6-7. Support of Delay Pellet

enclosed free volume is increased, quickly at first, by the primer or flash charge and then progressively by the gas liberated by the burning of the delay column. The result is that the burning rate (which usually is nearly proportional to pressure) accelerates continuously. The burning rate does not increase directly with the column length unless the free volume is also increased. This requirement for a volume more or less proportional to the delay time limits obturated gas producing delays to about 0.4 sec with the common diameter columns of 0.1 to 0.125 in. The delay time of an obturated delay element, in addition to its direct relationship to the free volume, is inversely related to the gas volume and heat of explosion of the primer (Fig. 6-8[a]).

If the pressure rise in an obturated system is sufficient to cause bursting or significant leakage, the overall burning time will be greatly increased or the delay charge may not sustain its burning. The pressure may be calculated from thermodynamic consideration of heat and gas volume liberated by the primer and delay column and the enclosed free volume in which the gases are confined. For design test purposes, the following emperical equation gives a reasonable estimate

$$P = 30(W_p + W_d)/V, \text{ psi} \qquad (6\text{-}1)$$

where

P = pressure, psi

W_p = weight of priming composition, mg

W_d = weight of delay composition, mg

V = enclosed free volume, in?

6-2.1.5 VENTED DELAYS

The burning rate of a gas producing material is, in general, nearly proportional to pressure. At atmospheric pressure, a vented black powder delay column 0.125 in. in diameter, pressed at 65,000 psi, burns at an inverse rate of about 5.5 sec/in.

When mounted in fuzes, vented delays must be located so as to vent to the outside or to a relatively large volume. If other components of the fuze also occupy the volume, account must be taken of the effects of gaseous combustion products on these components.. Since the behavior of black powder is adversely affected by moisture, vents must be sealed until the delay is initiated. Two methods of sealing are shown in Fig. 6-4.

6-2.2 GASLESS DELAY CHARGES

6-2.2.1 DELAY COMPOSITIONS

The limitations of gas producing delay compositions and the inherent problems associated with their design have led to the development of gasless delay mixes. It is possible to write stoichiometric equations for many highly exothermal reactions that produce no gaseous products. A larger number of these have been considered and many subjected to experimental investigations[6-9]. However, most of them have been discarded for one or another of the following reasons:

1. Erratic burning rates

2. Too large column diameter necessary for reliable propagation

3. Large temperature coefficient of burning rate

4. Failure at low temperatures

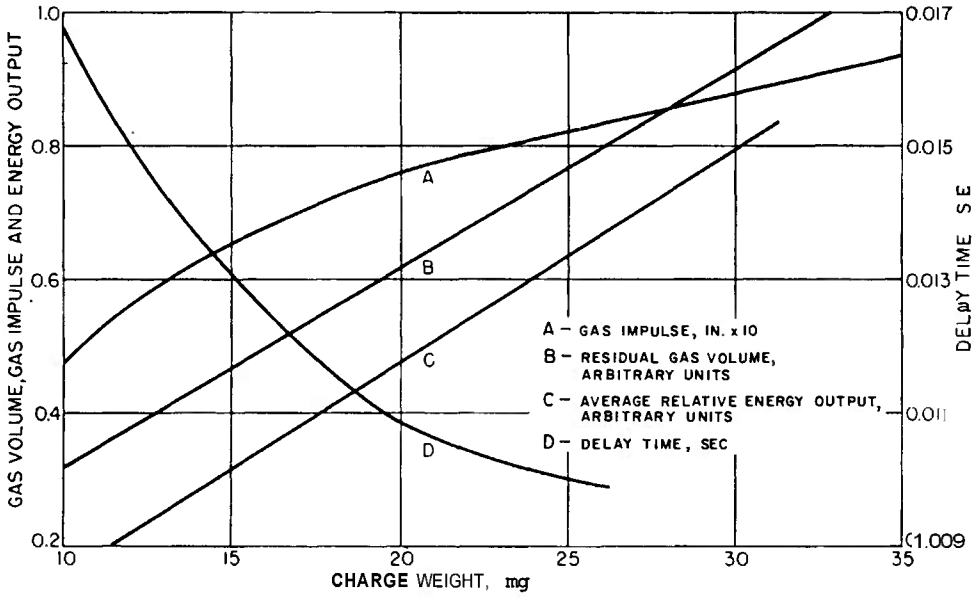

Figure 6-8. Characteristics of an Obturated Black Powder Delay Element

5. Hygroscopicity

6. Rapid deterioration

7. Unavailability of reproducible supply of raw materials

8. Large pressure coefficient of burning rate

9. Failure at low pressure

10. Reaction products liquid or otherwise subject to movement from acceleration during burning.

Table 6-1 lists the gasless delay combinations in current use. The range of compositions given for some of the combinations allows for adjustment of the burning rates over wide ranges.

6-2.2.2 IGNITION POWDERS

A column of gasless delay composition is usually preceded by a charge of igniter mix. Igniters are necessary when the delay compositions are too insensitive to be initiated directly by the agent used in the particular application. These ignition powders also can be used in systems requiring very short time (microsecond or millisecond) delays. Table 6-2 gives the compositions of igniter mixes used in gasless delay elements.

Note that these are all gasless mixtures that also have application as gasless delay mixtures. They differ from the mixtures of Table 6-1 in that they burn faster and are readily ignitible.

6-2.2.3 PROPERTIES OF DELAY AND IGNITION POWDERS

6-2.2.3.1 PROPERTIES OF INTEREST

In addition to burning rates, properties of delay powders of interest include variability of burning rate, temperature coefficient of burning rate, pressure coefficient of burning rate, effects of storage (both wet and dry), effects of column diameter, and obturation and mechanical properties. Other special problems may be associated with the use of

TABLE 6-1

GASLESS DELAY COMPOSITIONS IN CURRENT USE

Fuel	Oxidant		Inert
Boron	Barium chromate	Chromic oxide	None
4 to 11	89 to 96	–	
13 to 15	40 to 44	41 to 46	
Manganese	Barium chromate	Lead chromate	None
45 to 30	0 to 40	15 to 70	
20 to 50	70 to 40	10	None
Molybdenum	Barium chromate	Potassium perchlorate	
20 to 30	70 to 60	10	
Ni-Zr Alloy	Barium chromate	Potassium perchlorate	None
	60	14	
Ni-Zr Mix	Barium chromate	Poatssium perchlorate	None
5/31	22	42	
5/17	70	8	
Selenium	Barium Peroxide	–	Talc
84	16		0.5 (added)
Selenium	BaO_2	–	Tin/lead alloy powder
20	80		(15/85)
			20
Silicon	Red Lead	–	Celite
20	80		max. 8 parts by weight
Tungsten	Barium chromate	Potassium perchlorate	Diatomaceous earth
27 to 39	59 to 46	9.6	5 to 12
39 to 87	46 to 5	4.8	3 to 10
Zirconium	Lead dioxide	–	None
28	72		

one or another type of composition. Before discussing these properties, it should be stressed that they are affected by such variables as particle size, particle size distribution, intimacy and uniformity of mixture, relative distribution of components of a mixture, and impurities that are not readily detectable. To control these variables, relatively elaborate procedures have been established for the procurement, characterization, and treatment of raw materials, and the mixing and subsequent treatment of the ignition, and delay powders. It should not be assumed that similar properties will be observed in all mixtures of the same nominal chemical composition. The description of the compounding of delay compositions is beyond the scope of this handbook.

6-2.2.3.2 BURNING RATES

Table 6-3[10] gives the ranges of burning rates of current gasless delay compositions.

TABLE 6-2

IGNITION POWDERS FOR GASLESS DELAY ELEMENTS

Fuel	Oxidant	Inert
Boron (30)	Lead peroxide (70)	–
Boron (10)	Barium chromate (90)	–
Zirconium (41)	Ferric oxide (49)	Diatomaceous (10) earth
Zirconium (65)	Ferric oxide (25)	Diatomaceous (10) earth
Zirconium (33) Titanium (17)	Ferric oxide (50)	–

The variation of burning time within a lot of delay elements is expressed as a *coefficient of variation,* the standard deviation of the burning time expressed as a percentage of the total burning time. Under controlled laboratory conditions, the coefficients of variation of most of the materials listed are three percent or less.

Lot-to-lot variability may be compensated by adjusting the length of the delay column for each new lot of delay composition or by adding appropriate ingredients and remixing to speed up or slow down the mixture. Variation may be greatly reduced by careful control of raw materials and preparation procedures.

Coefficients of variation as small as three percent, however, cannot be expected in practical delay elements. Variations in other components than the delay column contribute to the variability. In general, these other variations affect the shorter delays most seriously.

6-2.2.3.3 EFFECTS OF TEMPERATURE AND STORAGE

Since the burning of a pyrotechnic delay composition is essentially a heat transfer process and since the peak temperatures are lower than those of most explosive reactions, it is to be expected that temperatures of −65° to +125°F, the usually specified operating range of military materiel, should have a significant effect. In general, the effect is more than is desirable, experimental results ranging up to 25% variation.

A number of delay compositions have been stored at both high and low humidity[**]. All those tested survived the low humidity

TABLE 6-3

BURNING RATES OF GASLESS DELAY COMPOSITIONS

Composition*	Designation	Approximate Inverse Burning Rate, sec/in.
$BaCrO_4/Cr_2O_3/B$	–	4.5-8.5
44/41/15		4.5
44/42/14		6.5
41/44/13		8.5
$BaCrO_4/B$	–	
(amorphous)		0.5-3.5
(crystalline)		9-12.5
9515		1.5
90110		0.6
$BaCrO_4/KClO_4/W$	–	
40110/50		12.5
70/10120		41
$BaCrO_4/KClO_4$/(Zr-Ni)(alloys)		3-11
60/14/9(70-30)/17(30-70)	Type II	6
60/14/3(70-30)/23(30/70)	Type III	11
$BaCrO_4/PbCrO_4/Mn$	D-16	2.5-12.5
0145155		2.17
30133137		9.45
30133137		16.58
BaO_2/Se/Talc 84/16/0.5 added	–	2.3
Red Lead/Si/Celite 80/20/3 *to* 7 added	–	4-11
PbO_2/Zr 28/72	–	< 0.5
$Zr/Ni/BaCrO_4/KClO_4$		
5/31/42/22	T-2	6.5
5/1717018	HP-25	17.8

*Numbers given are percentages

storage without failure whereas a number of mixes failed after high humidity storage. It was concluded that the mixes will survive storage in well sealed packages. Effect of surveillance on burning rates was inconsistent, some mixes slowing down 6% while others accelerated up to 30%. It is not clear whether the tests demonstrated the effectiveness of the seal or the moisture resistance of the delay composition.

6-2.2.3.4 EFFECTS OF REDUCED PRESSURE

In some applications, vented delay systems are required to operate at high altitudes. Many compositions are affected appreciably at low pressures. Some of the slower mixes with crystalline boron, for example, could not be initiated at pressures less than 50 to 2000 mm of Hg. One molybdenum mix at 40 mm, the lowest pressure at which it would ignite, doubled its burning time as compared with normal atmospheric conditions.

6-2.2.3.5 EFFECTS OF ACCELERATION

Delay elements are often subjected to very high accelerations while the delay composition is burning. If the structure of the material at or behind the reaction front is too weak, the accelerations may cause the hot products to lose contact with the unburned delay composition or a subsequent charge, and extinguish the reaction.

Although quantitative data regarding the resistance of delay compositions to this type of failure are not available, the "slag retention"—the fraction of the weight of the original charge remaining in an open ended delay column after functioning—has been used as a qualitative indication of this property and the relative gaslessness of the composition. Slag retentions are in the following descending order: Red lead, 90%-95%; tungsten, >88%; Ni/Zr, 80%-90%; Boron, 50%-90%.

6-2.2.3.6 PARTICLE SIZE

The effect of particle size on the inverse burning rates of delay compositions is nearly direct. In addition to increasing the burning rate (faster burning), reduction of the particle size tends to reduce the effects of temperature and pressure.

6-2.2.4 DESIGN, FABRICATION, AND LOADING

An ideal delay composition would be a material which, once ignited, would burn at a uniform rate that is independent of all surrounding conditions. This ideal has not been attained. Reasonable performance of a delay element demands that the design take into account the effects of various conditions upon the behavior of the composition.

6-2.2.4.1 LOADING PRESSURE

Data relating burning rate to density for barium chromate/boron compositions are given in Table 6-4. Similar results necessarily will not be found with other compositions. The rather small and systematic change of burning rate with loading pressure suggests that considerable latitude is available to the designer and that adjustment of pressure might be a convenient way to compensate for lot-to-lot variations in burning rate. However, considerations of ruggedness have resulted in the practice of loading gasless delays at pressures between 30,000 and 40,000 psi. In this respect, it should be borne in mind that a crack in a delay column can result in a "blow through" and instantaneous functioning. For best results, delay columns and igniter charges should be loaded in increments not over one-half diameter long.

6-2.2.4.2 COLUMN DIAMETER

Radial losses of heat can retard or extinguish the burning of a delay column. Such losses, of course, become more serious as the column diameter, burning rate, and ambient temperature are reduced, and these effects

TABLE 6-4

EFFECT OF LOADING PRESSURE ON $BaCrO_4$-B COMPOSITIONS

	Loading Pressure, 10^3 psi					
95/5 $BaCrO_4$-B	**36**	**18**	**9**	**3.6**	**1.3**	**0.5**
Mean burning rate, sec/in.	1.69	1.60	1.49	1.39	1.29	1.21
Mean burning rate, sec/g	0.648	0.655	0.645	0.642	0.646	0.693
% Coefficient of Variation	1.2	0.6	0.7	0.7	0.8	0.8
90/10 $BaCrO_4$-B						
Mean burning rate, sec/in.	0.670	0.653	0.619	0.586	0.558	0.544
Mean burning rate, sec/g	0.272	0.276	0.280	0.287	0.297	0.309
% Coefficient of Variation	1.5	0.9	1.1	1.6	2.0	1.8

combine to result in a failure diameter associated with delay mix and temperature (see Table 6-5). For practical manganese delay mixtures at −65°F, the quarter-inch diameter usually used is well above the failure diameter.

TABLE 6-5

FAILURE DIAMETER VARIATION OF MANGANESE COMPOSITIONS AT −65°F

Inverse Burning Rate, sec/in.	Failure Diameter, in.
3	< 0.109
10	0.125-0.156
12.5	0.156-0.203

6-2.2.4.3 WALL THICKNESS

The body into which a delay is loaded serves as a heat sink. Metals in general are much better conductors of heat than is the delay composition. Delay columns close to their low temperature failure diameters tend to have larger thermal coefficients as the surrounding wall thickness is increased. For materials well above their failure diameters, the effect of wall thickness becomes less important. It has been suggested that a body with very thin walls of a good thermal conductor might accelerate burning by preheating the column ahead of the burning front[1].

The strength of the delay body can be important. Yielding under the loading pressure has been found to result in erratic delay times[2]. Stress analysis of the body as a tube stressed hydraulically is a conservative means of assuring adequate strength. However, experience indicates that delay bodies will usually give satisfactory results under conditions such that calculated stress is well beyond the yield point.

6-3 DESIGN PRINCIPLES

6-3.1 OBTURATED VS VENTED DESIGN

The harmful effects of moisture and other atmospheric gases make sealed delay elements desirable in all cases and mandatory for situations where an element that must be exposed to normal storage and handling conditions contains materials that fail after humid surveillance. Obturated delays inherently are sealed.

Delay powders are divided into two categories, those whose reaction products are largely gaseous, and those known as gasless. All current design effort has been applied to

the latter that lend themselves to obturated design.

The term gasless must not be taken literally. Gasless delay compositions produce some gas, chiefly as a result of impurities. Gas quantity is much less predictable than that of gaseous delays. For this reason, it is the best practice to use an internal volume large enough so that the effect of pressure build-up on the delay time is negligible. This is quite practical in relatively short delays. However, as the length, and consequently the amount of delay powder increases, the required free volume also increases, so a delay element can get quite bulky. Such considerations often drive the designer to the use of a vented system.

6-3.2 DESIGN RULES OF THUMB

Because delay compositions are metastable materials containing all ingredients necessary for self-propagating reaction, their burning is metastable. The effect of any factor which tends to cause an increase or decrease in burning rate is exaggerated. For this reason, satisfactory performance requires accurate control of all such factors. Control must be maintained from the procurement of raw materials until the munition, of which the delay is a component, reaches its target. The following rules should govern the designer:

1. Use delay compositions prepared by a well established procedure from ingredients of known and controlled characteristics.

2. Use obturated or internally vented construction where practical.

3. Where obturated construction is impractical, use a seal that opens at ignition.

4. If a sealed unit is not practical, use delay compositions of demonstrated resistance to conditions of high humidity.

5. Calculate the effect of cumulative tolerances upon such pertinent factors as internal free volume.

6. Provide for adequate free volume in obturated units.

7. Analyze stresses induced by both internal and external forces which may be anticipated during loading, shipping, launching, and operation.

8. Make sure that all components will survive these stresses taking into account the elevated temperatures that result from burning of the delay column.

9. Specify adequate loading pressures (at least 60,000 psi for gas producing compositions and at least 30,000 psi for gasless delay powders) and short enough increments (one-half diameter).

10. Provide for proper support of delay column.

11. Use diameters well above failure diameter at **−65°F.** (Usual practice is 0.2 or 0.25 in. for gasless mixtures; 0.1 or 0.125 in. for black powder.)

REFERENCES

a-k Lettered references are listed in the General References at the end of this handbook.

1. *A Compendium* of *Pyrotechnic Delay Devices,* Journal Article 31.0 of the JANAF Fuze Committee, 23 October 1963, AD-474 833.

2. H. S. Leopold and E. E. Kilmer, *An Investigation* of *Internal Venting for Delay Actuators,* NAVORD Report 5724, Naval Ordnance Laboratory, Silver Spring, Md., 10 September 1957.

3. D. E. Seeger and R. E. Trezona, *Development of the 50 Millisecond-Delay* ***T65***

Electric Detonator, Report TR 2594, Picatinny Arsenal, Dover, N.J., April 1959.

4. TM 9-1300-203, Artillery Ammunition for guns, howitzers, mortars, and recoilless rifles. DA, 6 April 1967.

5. J. Squier and L. Zernow, *Short Delay Baffle Detonators for Antiaircraft Contact Fuzes,* BRL Report 690, Aberdeen Proving Ground, Md., February 1949.

6. David Hart, *Long-Range Development of Delay Powders for Ammunition Fuze Application,* Report TR 1733, Picatinny Arsenal, Dover, N.J., 7 June 1949.

7. Burton Werbel, *Development of Delay Powders,* Report TR 2249, Picatinny Arsenal, Dover, N.J., September 1955.

8. R. Comyn and R. Dwiggins, *Surveillance Characteristics of Gasless Igniters,* NAVORD Report 1774, Naval Ordnance Laboratory, Silver Spring, Md., 14 March 1951.

9. *Effect of Loading Variables on the Burning Characteristics of Delay Powders,* NAVORD Report 2262, Naval Ordnance Laboratory, Silver Spring, Md., December 1951.

10. M. F. Murphy, *A Comparative Study of Five Pyrotechnic Delay Compositions,* NAVORD Report 5671, Naval Ordnance Laboratory, Silver Spring, Md., 2 April 1958.

11. B. A. Breslow and R. K. Blanche, Sr., *Development of a Short-Time Interval Fuze Delay Element for 2.75-inch Folding Fin Aircraft Rocket,* NAVORD Report 3333, Naval Ordnance Test Station, China Lake, Calif., May 1954.

12. E. E. Kilmer, *The Development of the XE-57B Delay Primer for the Picket Bout Depth Charge Pistol,* NAVORD Report 6092, Naval Ordnance Laboratory, Silver Spring, Md., 13 October 1958.

CHAPTER 7

LEADS AND BOOSTERS

7-1 DESCRIPTION

7-1.1 GENERAL

Leads and boosters are those components of the explosive train whose functions are (1) the transmission of the detonation established by the detonator, and (2) its augmentation to a level such that the main charge is initiated reliably. They are the most flexible tools of the explosive train designer and they are the components most influenced in operation by his decision regarding the design of inert parts. They are relatively simple in function and fabrication.

The explosive contained in a booster is called a booster charge. In common usage, the term *booster charge* is abbreviated to *booster*. Actually, a booster consists of a housing and other metal parts, the booster charge and, as a special feature, an auxiliary arming device. We are concerned here only with booster charges.

Figs. 7-1 to 7-3 are sectional views of typical military items that illustrate the use of leads and boosters. Fig. 7-1[1] shows a complete booster, the M21A4, that is employed with point-detonating fuzes to effect the functioning of projectiles. The external threads screw into the projectile so that the booster rests in the fuze well. The internal threads hold the nose fuze, one of the M48 family.

The booster consists of two parts that thread together, (1) the booster charge N(a tetryl pellet) held in the aluminum booster cup *M* and (2) the brass housing *A* that contains detonator *E*, lead *L*, and a rotor as well as a variety of pins and springs which make up the auxiliary arming device. It is the purpose of the auxiliary arming device to prevent initiation of the booster in the event of a premature functioning of the fuze detonator. When armed by setback and centrifugal forces of firing, the booster detonator moves into line with the fuze detonator. The explosive train is then complete so that the detonator in the fuze initiates the booster detonator which in turn sets off lead and booster charge. This is an example of a complex booster. Usually the booster consists only of a booster charge and a housing. The safing and arming device normally is part of the fuze explosive train.

Fig. 7-2[2] illustrates the use of boosters in spit-back systems. Two booster charges are required for this application, the donor (auxiliary booster) at the end of the fuze explosive train and the receiver (booster) at the bottom of the projectile cavity. Operation of this fuze is discussed in par. 7-2.5.

Finally, Fig. 7-3[f] shows a typical small caliber fuze with booster charge. Because of the compactness of the 20 mm fuze, no lead is required. When the fuze is armed, the firing pin initiates the detonator that sets off the booster directly. This figure illustrates that booster design is not hard and fast. Here the booster acts as an auxiliary booster while the top-off charge loaded into the projectile acts as a booster (see also Fig. 1-2).

7-1.2 FUNCTIONS

7-1.2.1 LEADS

In some constructions, the separation between detonator and the next charge may be

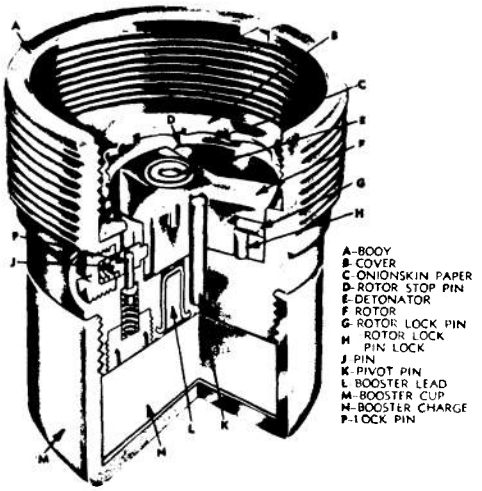

Figure 7-1. Booster, M21A4

short, while in others, the detonator is mounted remotely from the booster. A lead is used to transmit the detonation from detonator to booster when the gap is too large for direct transmission. Leads are also used when complexity or safety of the train demands them. These various circumstances have resulted in the evolution of a wide variety of leads. Some are simple cylindrical charges of relatively small length-to-diameter ratios and others are quite long. Some transmit detonation around corners or angles and others are flexible.

While the function of a lead is merely the transmission of a detonation, in practice leads are often used to augment the output of detonators. This is done because, for reasons discussed in par. **3-1,** boosters are generally harder to initiate than leads and because leads are often called upon to initiate subsequent charges across large gaps or through heavy barriers. On the other hand, **it** is possible to design detonators with output adequate for the direct initiation of boosters, even where gaps are appreciable, In fuzes for small arms, leads usually are not necessary (see Fig. **7-3).**

7-1.2.2 BOOSTERS

The main charges of high explosive materiel are as insensitive as it is practical to make them. Detonators and leads are as small as is consistent with reliability. In general, neither detonators nor leads are in themselves sufficient to initiate main charge explosives reliably. Boosters are elements of sufficient output to detonate main charges reliably when initiated by detonators or leads. Hence, the main function of the booster is to augment the detonation wave.

Generally, boosters are loaded with the same or similar explosives to those used in the base charges of detonators and in leads. Therefore, their intensity as characterized by velocity of propagation, pressure, temperature, and particle velocity is not distinguished from that of detonators and leads. However, since the booster charge is larger, its output is correspondingly greater.

7-1.3 EXPLOSIVES

For many years tetryl was the standard lead and booster explosive. It is still used in much service ammunition.. Many of the principal rules of thumb, practices, and procedures that serve as guides in the design and loading of explosive components and systems derive in part from the properties of tetryl. For this reason, tetryl has served as a standard of comparison for booster explosives. It has given rise to such design guidance as "no lead or booster shall be more sensitive than tetryl", at least in the U.S. Navy. Quantitative criteria for the acceptability of explosives below the train interrupter have not yet been established[3]. However, Ref. **4** is the result of efforts by the services, under the leadership of the Navy, in this direction.

There are a number of objections to tetryl. It is expensive to manufacture, causes air pollution, and has undesirable dye characteristics. For these reasons, the manufacture of tetryl is being terminated. However, a universally accepted substitute has not yet

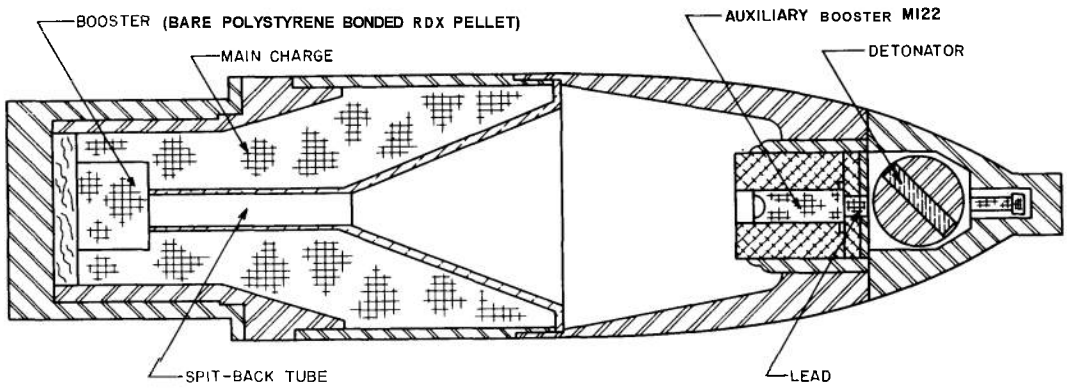

Figure 7-2. 2.75-in. HEAT Rocket With Spit-back Explosive System

been agreed upon. RDX containing a maximum of 2% wax (acting as a binder-lubricant) is used in many current Army designs. HMX and other explosives have been found to be advantageous for some applications. MIL-STD-1316[5] lists HNS, DIPAM, and CH6. All of these are expensive and, in addition, CH6 does not work well in trains[3]. Recently, Compositions **A-3,** A-4, and A-5 have been recommended as interim materials[4].

An essential feature of any military explosive item is the safety provision of the fuze. This feature would lose its purpose if the sensitivity of the leads and booster were not limited. On the other hand, the booster must be sensitive enough to detonate reliably when initiated by means of a detonator or explosive lead. Thus, maximum and minimum allowable limits of sensitivity must be closer together for lead or booster explosive than for other explosives. Considerations of design economy and of safety and reliability determinations tend to compress these limits still further.

The explosive material used in the booster is somewhat more sensitive than the main charge, is smaller than the main charge, and is less sensitive than the previous explosive components. It should be remembered that initiation sensitivity is a function of a number of variables of the experimental system including the agency of energy transfer, the confinement of the explosive elements, the state of aggregation of the explosive, and the dimensions of the explosive elements. The effects of these variables interact to make quantitative prediction difficult unless the experiment is a reasonably accurate simulation of the conditions of use. Fortunately, the design and loading practices for leads and boosters are well enough standardized that a relatively modest test schedule can be devised to include conditions representative of all but highly specialized applications.

Table 3-3 is a list of the sensitivities of various booster explosives as measured by several techniques. For comparison, a few typical main charge explosives have been included. Note that the presence of one or two percent of calcium stearate or wax has an adverse effect upon the sensitivity of RDX to initiation. Some designers have considered these materials only as binder-lubricants for the improvement of loading properties, overlooking their effects upon sensitivity. For this reason, notations appear in drawings or specifications indicating that "up to 1 percent" of these materials *may* be added. The variation allowed by such notations can result in a change in gap sensitivity by a factor of three or four. This is sufficient to make the difference between a highly reliable system and one that is almost completely inoperable.

In choosing an explosive material for a booster, both the design of inert parts and

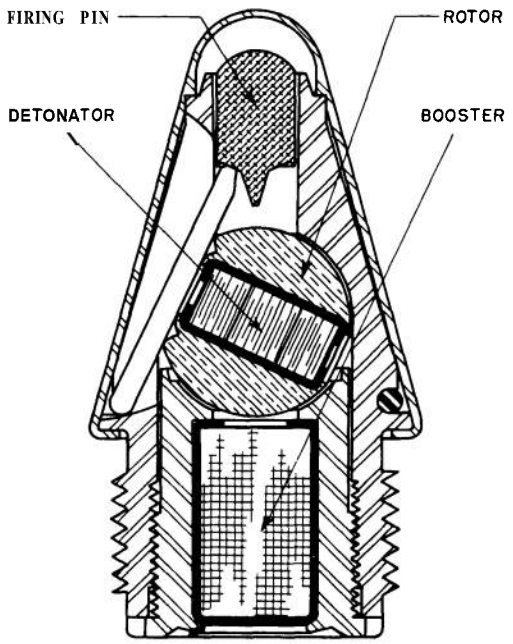

Figure 7-3. 20 mm Fuze, M505

special environmental conditions associated with the application must be considered. Sensitivity and output of explosives may be adjusted by varying their loading densities. Thus, in some applications, substitution is possible, without adverse effects upon established safety or reliability levels if the designer is free to specify the loading density of the substituted explosive. However, the loading pressure needed to attain the necessary density may exceed the strength of the container. On the other hand, if the necessary density is too low, the explosive may be subject to breakage, crumbling, or to other mechanical failure.

The need to consider cook-off and thermal decomposition at high temperatures is obvious. In the case of leads and boosters, the effects of temperature extremes upon explosive properties, in particular upon sensitivity, may be more serious than in other explosive charges. As is shown in pars. **4-2.2** and **4-2.3** these effects can be quite large. In these respects, RDX and many of its mixtures, particularly when plastic bonded[6], are markedly superior to tetryl.

Most boosters are pressed as pellets. Pure RDX forms low density, crumbly, pellets when pressed at 5,000-15,000 psi, and, at high pressures, the pellets are so brittle that they often break as they are pushed from the die. RDX Class C was developed to alleviate this difficulty that may be further reduced by the addition of one or two percent of a binder-lubricant.

Polystyrene bonded RDX 9/91 (PB-RDX) was origninally intended as a compound for hot molding as a plastic. However, it can be press loaded at ordinary room temperatures like other powdered explosives. When so loaded, its physical properties, although not as good as those of hot molded PB-RDX, are definitely superior to those of almost any other pressed powdered explosive usually 98/2 RDX/binder. The sensitivity of PB-RDX, when pressed at similar pressures, is almost identical with that of other booster explosives, while its output closely resembles that of tetryl. Improved physical properties and output can be obtained by hot pressing under vaccum—hot pressing alone can produce pellets that pop open like muffins when ejected from the die—higher loading pressures, or both, but at the expense of somewhat reduced initiation sensitivity.

7-2 DESIGN CONSIDERATIONS

7-2.1 RELATION TO FUZE DESIGN

As fuze components, dimensions of leads and boosters are largely determined by the necessities of fuze design. Similarly, the mechanical design of the fuze in which it is used is one of the important governing factors in the confinement afforded an item of this type. The fact of the matter is that the design of leads and boosters interacts with the mechanical design of fuzes to such an extent that the most practical arrangement is usually that in which these items are designed by the fuze designer.

The design of leads and boosters in not as complex as that of initiators. For this reason, many past designs have been evolved by copying a previous design that served its purpose satisfactorily. There is nothing wrong with such an approach provided improvements are added when possible, care is taken not to perpetuate errors, and due consideration is given to safety and reliability. Since lead and booster layout and materials affect other fuze design features to a large extent, it is best to give them careful consideration in early design stages before major dimensions are frozen. In the case of leads, standards have been established for dimensions and cups[h].

7-2.2 LEADS

7-2.2.1 LENGTH

When a lead is initiated by a detonator or another lead it is best to have no gaps or barrier at all. When there must be a gap, it is best to have the donor component end covered by a metallic disk on the order of 0.005-0.010 in. thick. When the lead has a closure at the output end, a small gap at the end may also increase the reliability with which it will initiate the succeeding element. Although a number of investigators have noted that detonation is more effectively transmitted by moving fragments than by shock, flame, or even by the direct contact of detonating explosive, the permutations of variables are so numerous as to have discouraged a quantitative study of their interactions to affect reliability.

Where a lead is used to augment the output of a relatively mild detonator or where it is initiated for use under adverse conditions such as across a large gap or through a heavy barrier, it may be necessary to make leads longer than they would be just for transmission. It has been found that the output of a lead that detonates high order for most of its length reaches a point of diminishing' returns when the length is about four or five diameters or more. The growth of detonation in marginally initiated leads has been observed to take place over as many as fifteen diameters but the reproducibility of this process is not well enough established to be relied upon, even if systems involving such gradual growth in leads had attractive design possibilities. At the present state of the art, the only valid reason for use of a lead more than four diameters long is the necessity arising from the mechanical separation of the components that it connects.

7-2.2.2 DIAMETER AND CONFINEMENT

The most usual combination of lead diameter and confinement in military usage is an explosive column between 0.150 and 0.160 in. diameter, heavily confined in brass or steel. Fig. 7-1 is an example of such a design. Failure diameters are listed in Table 7-1. It must be remembered, however, that failure diameters are highly dependent on particle size, density, and confinement.

As is indicated in par. 3-1.1, the most reliable transmission of detonation between a detonator and a confined lead occurs when the lead is close to the same diameter or slightly smaller in diameter than the detonator. Since a common diameter of detonators in military use in 0.192 in. OD and about 0.172 in. ID , the prevalent lead diameter is well chosen from this point of view.

The effect of lead diameter upon lead sensitivity is not usually of practical significance in the design of military materiel. Where it is, present practices are close to ideal.

The importance of diameter and gap to sensitivity is illustrated for idealized acceptors similar to leads in Fig. **3-2.** Effect of gap and confinement for actual service leads on initiation by detonators is shown in Fig. 7 4 .

The effect of the wall thickness of a confining tube upon the initiation sensitivity of leads or similar small columns, has not been quantitatively evaluated. In one experiment with 0.169-in. diameter leads, there

TABLE 7-1

FAILURE DIAMETERS OF LEAD AND BOOSTER EXPLOSIVES

Explosive	Bare, in.	Confinement, in. Fabric (Detonating cord)	Lucite[a]	Aluminum[b] (0.006 walls)	Lead (MDF)	Heavy Brass or Steel[c]
PETN	–	0.06	–	<0.05	<0.01	<0.05
RDX	–	–	–	–	<0.02	–
RDX/Calcium Stearate 98/2	–	0.14-0.17	–	0.08-0.12	–	–
Tetryl	<0.50	–	–	0.10-0.13	–	<0.08
TNT (Granular)	0.50-0.70	<0.63	0.50	–	–	<0.10
TNT (25 μ)			<0.10	–	–	–

[a]Ref. 7
[b]Ref. 8
[c]Ref. 9

(Dimensions are in inches.)

was no significant difference resulting from confinements between 0.500 and 12.25 in. OD.

An important aspect of lead confinement is the effect of clearance between the lead cup and the hole in which it is inserted. By resisting radial expansion, the confining medium directs a larger fraction of the energy along the axis toward the booster. In an experiment with a standard lead of 0.171 in. nominal diameter, three groups were tested under identical conditions except for clearance[10]. Of those with a snug fit, ten out of ten fired high order; of those with 0.004-in. diametral clearance, only four fired high order while all ten with 0.008 in. clearance failed. In view of these results, the designer has the following alternatives:

1. Call for force fits of leads

2. Load the cup in place. (This procedure is of value only when the loading pressure is substantially beyond the yield pressure of the cup.)

3. Evaluate reliability on the basis that only the lead cup provides confinement, and safety on the basis that the lead is well confined.

The foregoing remarks regarding diameter and confinement of leads are intended to apply to common arrangements where lead and booster are in contact or separated only by short gaps and thin diaphragms incidental to assembly and packaging within a single unit. If heavy barriers are necessitated by mechanical design or if lead and booster are mounted in separate structural units of a weapon system, larger leads should be used to insure reliability.

7-2.3 BOOSTERS

In general, boosters are so large compared with the leads or detonators which initiate them that the initiation may be considered as a local action that is affected by neither dimensions nor confinement[10]. Their dimensions are so much larger than the failure diameters of the explosives with which they are loaded that neither dimensions nor confinement are factors in propagation within a booster. All of the important effects of booster dimensions and confinement are those upon output.

The function of a booster is, of course, to provide adequate output for the reliable initiation of the main charge. The size of booster needed to initiate a main charge, as

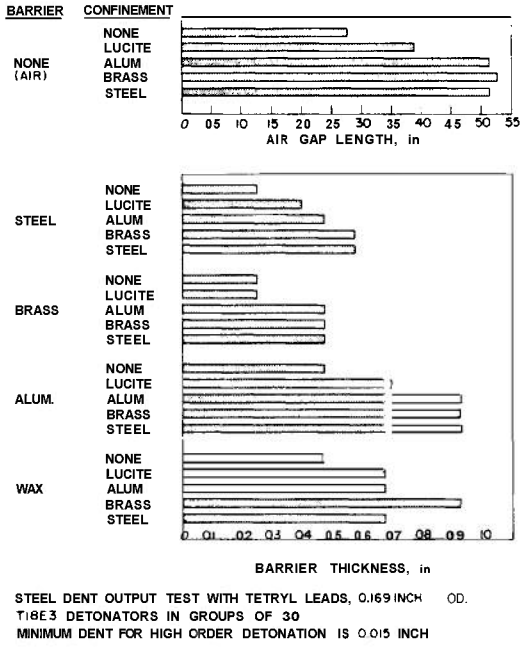

STEEL DENT OUTPUT TEST WITH TETRYL LEADS, 0.169 INCH OD.
T18E3 DETONATORS IN GROUPS OF 30
MINIMUM DENT FOR HIGH ORDER DETONATION IS 0.015 INCH

Figure 7-4. Critical Conditions for Detonation of Lead

pointed out in par. 3-1, depends not only upon the explosive material of the main charge, but upon its confinement, its state of aggregation as determined by manufacturing and loading procedures and conditions, and the location of the booster with respect to the main charge.

Although the design of a fuze or booster may be made with one particular main charge design in mind, boosters should be made as large and effective as possible to allow for maximum interchangeability and for future changes in main charge design, loading procedures, and explosive materials which may require more effective booster action.

If the process of making boosters as large as possible were carried to the extreme, one might ask, "Why not fill the whole round with a booster explosive and forget the booster?" This is essentially the way some small caliber rounds are loaded. The so-called boosters of most 20 mm fuzes (see Fig. 7-3) are closer to leads than to boosters in their size and function. For most high explosive materiel, however, the following motives apply for the reduction in the size of boosters so that the booster will be only a small fraction of main charge size:

1. Because of the greater sensitivity of booster explosives to friction, impact, and bullets, the booster should be protected by as much main charge explosive and metal and offer as small a target as possible.

2. Hazards such as cook-off and setback tend to increase with the mass of a charge as well as with the sensitivity of the explosive of which they are composed.

3. The larger the booster, the more it displaces of the main charge explosive, which was chosen for its special output properties.

In general, the mechanical design of a fuze leaves a certain amount of vacant space in the fuze cavity. If the designer fills this with as large a cylindrical pellet as practical, allowing for packaging the pellet and stand-off, he will be doing as well as possible. In this case, booster geometry is usually not critical.

While it might be possible to derive some notions from the data in par. 2-2.3 regarding an ideal length-diameter ratio, if such a ratio is attained by reducing the quantity of explosive in the booster, the improved ratio will result in a less effective booster.

The only reservation that might be expressed about filling the available space derives from the fact that metal fragments accelerated by the action of the booster may be more effective in the initiation of a subsequent charge than the direct action of the explosive. However, quantitative data on this effect have not evolved. Additional aspects of booster design are covered in Ref. 12.

7-2.4 CHARGE DENSITY EFFECTS

The sensitivities of most explosives reach

maxima at a specific density range. The optimum density varies with the explosive material as well as with the mode of initiation. For most situations encountered in military materiel, the optimum density is well below the range of densities at which military explosives generally are loaded. For most practical purposes, the sensitivity of explosives to initiation may be considered to decrease with increasing density. Output, of course, increases with increasing density, the rate of the increase ranging from linear to cubic depending upon the aspect of the output under consideration.

Booster and lead explosives for most military materiel are loaded at densities between 85 percent and 95 percent of voidless (corresponding with loading pressures between 5,000 and 20,000 psi). Within this range, the designer may adjust densities to attain needed compromises between sensitivity and output. If there is the need to employ explosives loaded at densities appreciably outside this range; loading, handling, and quality control problems discussed in pars. 10-3.2 and 10-6.2 should be considered.

In addition to the problems that are clearly in the province of production or quality control, the use of extremes of loading density introduces a group of propagation problems that must be taken into account. The longer reaction zones and more gradual growth and decay of detonation in lower density explosives result in a relatively large variation in detonation velocity, both stable and low order. These variations not only increase the probability of failure due to low order effects at corners, small sections, or abrupt changes, but often make it difficult to pinpoint the exact causes of such failures. In general, very low loading densities should be used only with larger than average charge dimensions.

The decrease in sensitivity with increasing density becomes more abrupt as the voidless density of an explosive is approached. Thus, small variations in density cause increasingly larger variations of sensitivity at very high densities. Before specifying densities in excess of 95 percent of voidless, a careful investigation should be made of factors in fabrication and loading which can affect loading density to determine the maximum density which can be anticipated in production. It should be determined that the preceding element is adequate for the initiation of lead or booster at this maximum density.

7-2.5 OUTPUT WAVE PROFILE

The output wave profile of the usual cylindrical booster or lead is a relatively simple curve, convex in the direction of propagation. For short boosters initiated by relatively small diameter leads or boosters, the front is essentially spherical, centered at the input lead. For longer charges, the curvature is determined by radial flow and shock propagation as described in par. 2-2.2. When the purpose of the lead or booster is only that of reliably initiating a subsequent charge, the gain in effectiveness which might result from a modification of this profile will usually be more than offset by the displacement of high performance explosive with lower performance explosive and inert materials used in such modification. However, main charges for many applications depend for their effectiveness upon the profiles of the wave fronts, which in turn are determined, at least in part, by the boosters that initiate them.

The techniques for the design of charges for the control of wave front profiles are described in par. 3-3.2. Charges of this kind are often called explosive lenses because of the close analogy between these techniques and those of geometric optics.

Most of the means used to shape wave profiles are present in all boosters. However, in most shaping applications in military materiel, the wave shaping features are included in the design of the main charge rather than the booster. In such instances the important requirement, so far as the booster is concerned, is that it initiates a wave with

reproducible and symmetrical profile in the main charge. Variable or asymmetrical initiation will, of course, defeat the best efforts at wave shaping[3].

Two alternate means are available to the designer for the reduction of variability and distortion of the wave front induced in the main charge: (1) specification of precise controls of all variables, or (2) design of a system to minimize their effects by the closest possible approach to the situation in which lead, booster, and main charge form a continuum of explosive through which the wave propagates as a continuous detonation. Of these, the latter is usually the easiest and most satisfactory. The following practices will help in this respect:

1. Use of the most effective lead feasible.

2. Use of a booster diameter that is large compared with the failure diameter of the main charge explosive.

3. Use of the most sensitive explosives compatible with safety.

4. Minimization of barrier thicknesses and densities, and of gaps between leads and booster, and between boosters and main charges. A bare booster in an unlined cavity is nearly ideal.

5. Use of explosives with the finest particle sizes available and compatible with reasonable loading procedures.

6. Use of explosives in a density range high enough for relatively rapid growth of detonation and low enough to avoid desensitization (90 to 95 percent of maximum theoretical density is a good range).

The shaped charge effect, as used in a **HEAT** round (see par. 3-3.5), results in the concentration of a substantial fraction of the axial output of an explosive charge in a rather small diameter jet. In most situations found in explosive systems, little advantage accrues from the use of shaped charge leads or boosters.

The most frequent use of shaped charges in explosive trains, except in the projectile charge, is in spit-back fuze systems (Fig. 7-2). In a spit-back system, the target is sensed by a nose fuze that initiates a booster at the rear of the explosive charge. Initiation of the main charge from the rear is essential for satisfactory performance of the shaped main charge. Note that the shaped auxiliary booster has a hemispherical rather than a conical liner, so as to have less degradation on spin and to provide a wider area of impact on target. Since reliable initiation of the booster in a spit-back system requires direct hits of the relatively small part of the booster exposed at the bottom of the spit-back tube, and since the slug or jet will be deflected by asymmetry of the liner or of the detonation front that projects it, close control is necessary of all dimensions of the auxiliary booster, of the fuze body that confines it, and in the loading procedure. In recent years, with the development of piezoelectric fuze systems, the interest in spit-back systems has waned[4].

7-3 CONSTRUCTION AND FABRICATION

7-3.1 LOADING TECHNIQUES

The design of leads and boosters, from the point of view of fabrication and construction, is largely determined by the loading procedure to be used. Three procedures are common:

1. Insertion of preformed pellets into containers

2. Reconsolidation of preformed pellets to conform to containers—used almost exclusively for boosters

3. Direct pressing of powdered explosive into containers. This method is used most extensively in the production of leads; volumetric charging by automatic equipment produces a pellet that is very uniform in both weight and size.

Of the three common techniques, the first is the simplest and most economical. Automatic machines are available which will produce pellets of any size suitable for use in leads or boosters. Most pellets are pressed at pressures between 5000 and 20,000 psi or to corresponding densities. It is the usual practice to limit pellet lengths to about one diameter because large density differences from one end to another are probable in longer pellets. Of course, when this technique is used, provision must be made for the retention of the pellets in their cavities. Clearances resulting from the accumulated tolerances of the cups and containers, requiring the use of inert padding—such as cardboard and felt disks to fill these clearances—may reduce the effectiveness of items loaded in this manner.

The third method, that of loading the powder directly, has the advantage that it can be used to fill a cavity to an exactly predetermined point, with a specified loading pressure (if the last increment is adjusted to compensate for tolerances of the container). This procedure may be expected to result in the most effective as well as the most reproducible performance. It is also the most expensive procedure. When inert components are designed for this type of loading, it is well for the designer at least to lay out a concept of a loading tool. In dimensioning the item, it should be remembered that the consolidating punches should fit the die with only a few thousandths of an inch clearance. Misalignment can initiate the explosive on the one hand or result in excessive binding on the other hand. Columns much over one diameter long are usually loaded in increments one diameter long or less.

The second method, although somewhat simpler and easier to tool for than the third and dispensing with some of the disadvantages of the first, can give trouble unless a means is provided of dealing with tolerances. If a pellet is reconsolidated at a fixed pressure, all of the tolerances in container, in weight or dimensions of the pellet, as well as any variations in compressibility of the explosive will combine to vary the length of the reconsolidated pellet. Similarly, if the pellet is pressed to a specified length, all of these tolerances and variations will be reflected in the density of the reconsolidated pellet, and consequently in the pressure it exerts on the walls of the container.

7-3.2 SHORT LEADS

Short leads are loaded by any of the techniques discussed in par. 7-3.1. When pellets are direct loaded, they may be retained by means of staked-in closure disks as shown in Fig. 7-5; by features incidental to the fuze design as in Fig. 7-6, or by a cup as in Fig. 7-7.

Where there is insufficient space for closure disks or cups, leads are loaded either by pressing powdered explosive or reconsolidating pellets directly into the cavity. An optional method that has proven useful in filling small lead holes nearly flush without adjusting weights for each individual item is that of loading somewhat more than enough to fill, and breaking off the excess as in Fig. 7-8. However, this method is never used for production. Where, as in Fig. 7-9[a], the open end of a lead is at a sliding surface, it is the usual practice to coat the ends with lacquer or varnish to prevent dusting. Onion skin disks are also used. Allowance should be made for the sealant in loading. Thic method involves the risk of gumming the surface so as to impede arming. The holes in which leads are to be loaded directly are sometimes scored to improve explosive retention.

Most leads are loaded into cups. Both flanged and straight cups of standardized dimensions are used[h]. Where leads completely packaged in metal are desired, closure disks are crimped in place. Moisture resistance is sometimes augmented by painting the crimped end with a lacquer, but the seals so obtained are not reliable.

Leads may be installed by crimping in place

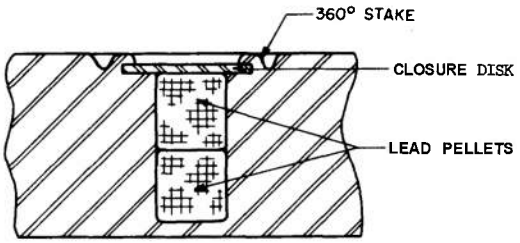

Figure 7-5. Lead Pellets Held in Place by Staked-in Closure Disk

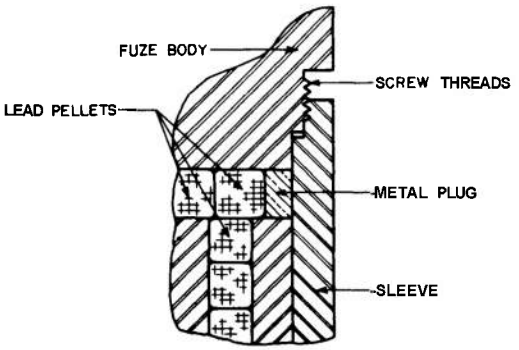

Figure 7-6. Lead Retained by a Feature of Fuze Design

(Fig. 7-10), securing with adhesive, force fitting, or by pressing the explosive into the cup after the cup has been inserted into the hole. The first method is the best adapted to economical production but should be specified only if the designer has taken into account the effects of clearances upon confinement as discussed in par. 7-3.1.

In designing for a force fit, the controlling dimension is the maximum cup dimension after loading. The diameter is slightly larger than the manufactured cup to allow for clearance between cup and loading tool. Since the hoop stress induced by the loading pressure is usually larger than the yield stress of the cup material, the cup expands to fit the tool. The cup may also expand slightly when removed from the loading because of residual stresses from loading. Therefore, when the lead cup is to be assembled as a force fit, diametral dimension and tolerance should be specified on the loading drawing of the lead.

7-3.3 LONG LEADS

Four types of construction have been used for explosive transmission between widely separated arming devices and boosters: (1) elongated leads or stacks of lead pellets of the types described in par. 7-3.2, (2) spit-back systems, (3) detonating cord, and (4) MDC (see par. 9-2.2.1).

Of the various adaptations of short lead fabrication practices to long leads, the reconsolidation of pellets is preferable. In loading loose pellets in a long hole, there is always a chance that one will jam, leaving a gap that can be detected only by X-ray or neutron radiography. Use of pellets without reconsolidation may lead to failures because of acceleration forces (setback) producing reconsolidation with resulting gap. The small ram clearances necessary for direct loading of powder, combined with a small deviation from straightness, can cause enough binding to seriously affect the reliability of the system.

Spit-back systems are discussed in par. 7-2.5. Essentially, a spit-back system consists of a small shaped charge that is initiated by a fuze system and that initiates a remote booster or receiver by the action of its jet. Most spit-back systems have been used to attain rear initiation of shaped charges from nose fuzes.

Detonating cord has the advantage that it can be bent around curves and may thus be used as the basis for flexible leads to transmit detonation along complex paths. As a very convenient form of a preloaded long explosive column, it also has been used for long straight leads. Detonating cord and MDC are described in par. 9-2.2.1.

7-3.4 BOOSTERS

Radial confinement is much less important

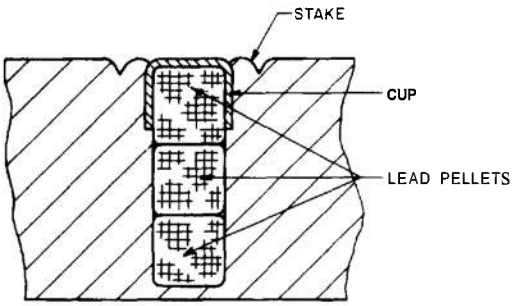

Figure 7-7. Lead Retained by a Cup

in its effect upon booster performance than upon lead performance. For this reason, unreconsolidated pellets are frequently used in booster construction. Cardboard disks and felt pads are sometimes used to take up tolerances, even though they detract from output if used at the bottom of a booster and from input sensitivity, if used at the top. An arrangement where the variations in pellet length may be taken up by screwing a cap to a snug contact with the pellet would be preferable if possible. A method of forming booster pellets to clear the fillets in the bottom of booster cups is illustrated in Fig. 7-11.

It is important that loading density of boosters be uniform. If density is allowed to vary unduly, this variability will be reflected in the profile of the wave front generated in the main charge. Most explosives vary in density from point to point with a resulting variation in detonation velocity. The small and reproducible gradient occurring between the ends of a pellet is not usually serious.

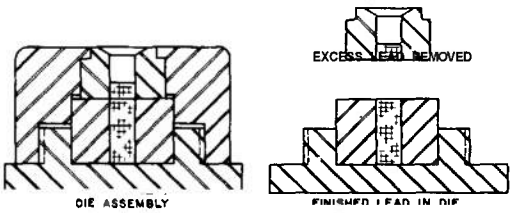

Figure 7-8. Explosive Loaded by Breaking Off Excess

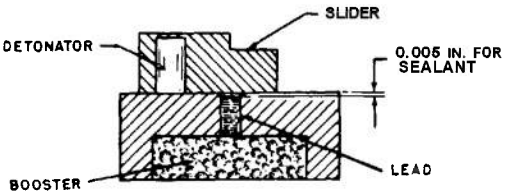

Figure 7-9. Lead End Coated With Sealant

However, with careless charging, it is possible for the explosive to stack obliquely against one side of mold or container as shown in Fig. 7-12. Explosives so stacked will not completely redistribute themselves under pressure so that the resulting pellet may be appreciably denser at one side than at the other causing asymmetry of the output wave.

Housings for boosters take many forms. They may be cavities machined into fuze bodies or they may be separate packages. Some booster charges have no housings at all and some are housed in thin drawn metal cups or thin-walled tubing with closure disks crimped in place. By far the most common housings are of the type shown in Fig. 7-1 which are simple cups, drawn, extruded, cast, or machined with walls thick enough to be threaded so as to screw into the fuze body. For the usual thread pitch, NS-16, the walls must be something over a sixteenth of an inch thick. Unless metal fragments are needed to defeat a heavy barrier, the walls through which the detonation is to be communicated

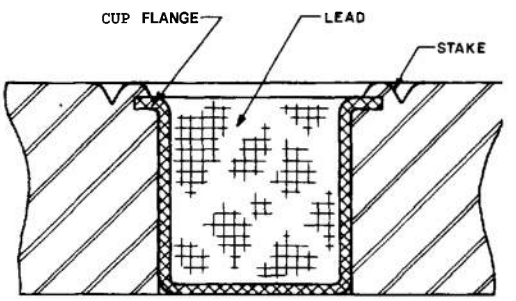

Figure 7-10. Lead Cup Crimped in Place

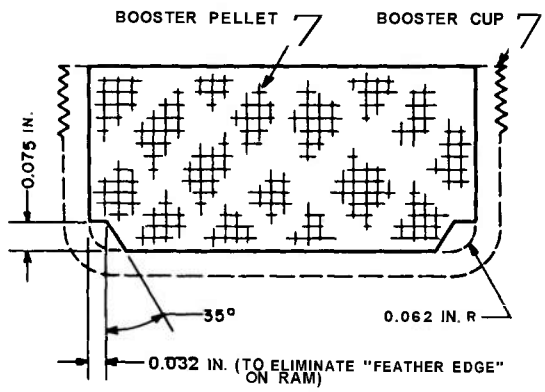

Figure 7-11. Chamfered Booster Pellet

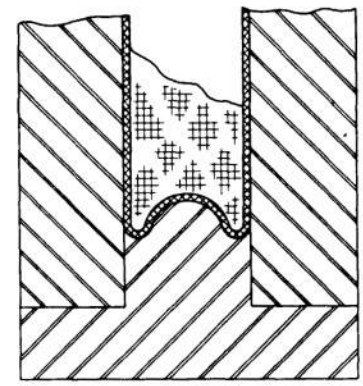

Figure 7-12. Improper Charging of Cup

to the main charge should be as light as consistent with mechanical strength.

Most boosters are closed merely by screwing the booster cup or cap into or onto the fuze. Others are closed by crimping a disk in place, cementing, or even soldering the cover on with low melting solder. Where covers or cups are screwed against surfaces close to a pellet, it is the usual practice to use a paper gasket to prevent explosive dust from being pinched directly between metal surface?. Where high spin accelerations are anticipated, it is a frequent practice to stake the threads heavily after the booster has been screwed closed. Threads and crimps are usually sealed. Another precaution is the use of left-handed threads.

REFERENCES

a-k Lettered references are listed in the General References at the end of this handbook.

1. TM 9-1300-203, Artillery Ammunition for Guns, Howitzers, Mortars, and Recoilless Rifles. DA, 6 April 1967.

2. T. Fruchtman, *Development of 2.75-Inch HEAT Rocket Head T20E1 (M1),* Report TR2252, Picatinny Arsenal, Dover, N.J., December 1955.

3. R. H. Stresau, "Confusion Concerning Lead and Booster Explosives", in *Proceedings of the Seventh Symposium on Explosives and Pyrotechnics,* held at The Franklin Institute, September 8-9, 1971, Paper 11-12.

4. *Safety and Performance Tests for Qualification of Explosives,* Report NAVORD OD 44811, Vol. 1, Naval Weapons Center, China Lake, Calif., 1 January 1972.

5. MIL-STD-1316, *Fuze, Design Safety, Criteria For,* Dept. of Defense, 17 September 1970.

6. A. J. Pascazio, *The Suitability of a Bare PBX Booster Pellet in the 2.75-Inch Head M1 Rocket Head,* Report TR2271, Picatinny Arsenal, Dover, N.J., November 1955.

7. *The Rate of Detonation of Various Explosive Compounds and Mixtures,* Report 5611, (from Explosives Research Laboratory) Office of Scientific Research and Development, OSRD, 15 January 1946.

8. L. D. Hampton, *Minimum Diameter for the Propagation of Detonation in Tetryl, RDX, and PETN,* NAVORD Report 4082, Naval Ordnance Laboratory, Silver Spring, Md., 1 August 1955.

9. L. D. Hampton, and R. H. Stresau, *Small Scale Technique for Measurement of Detonation Velocities,* NAVORD Report 2282, Naval Ordnance Laboratory, Silver Spring, Md., 27 December 1951.

10. M. J. White Jr., "Initiator Output Testing", in *Proceedings* of *the Electric Initiator Symposium,* held at the Franklin Institute 11-12 September 1957. Paper **XXXIII** (AD-153 579).

11. J. Savitt, *The Propagation of Detonation in Some Special Explosive Systems,* NAVORD Report 2844, Naval Ordnance Laboratory, Silver Spring, Md., 13 April 1953.

12. *Some Aspects* of *the Design of Boosters,* Journal Article 21.0 of the JANAF Fuze Committee, 20 June 1961 (AD-270 275).

13. G. M. Bryan, et al., "Effects of Asymmetry on Shaper Detonation Waves", in *Proceedings* of *Detonation Wave Shaping Conference,* Picatinny Arsenal, held at Jet Propulsion Laboratories, California Institute of Technology, Pasadena, California, 5-7 June 1956.

14. T. Fruchtman, *Development of the T2017E1 2.75-Inch HEAT Rocket Head,* Picatinny Arsenal, Dover, N.J., December 1955.

CHAPTER 8

MAIN BURSTING CHARGES

8-1 DESCRIPTION

8-1.1 FUNCTION

The purpose of the explosive train is achieved by initiating effective detonation on the main bursting charge of high explosive ammunition. The resulting detonation is the source of energy for the output effect of the item, designed to reduce or preferably destroy military targets.

For other types of military materiel, such as chemical ammunition, the main bursting charge (called *burster)* is designed to open the case and disseminate the contents of the round.

Each ammunition item is color-coded to indicate the type of loading according to MIL-STD-709[1] .

8-1.2 TYPICAL MAIN BURSTING CHARGES

8-1.2.1 HIGH EXPLOSIVE (HE) AMMUNITION

High explosive ammunition is designed to produce a blast or fragmentation effect. It is primarily a container filled with high explosive. Its size, shape, and construction are determined by ballistic and structural considerations that vary depending on whether the vehicle is a projectile, bomb, or other ammunition.

A typical high explosive projectile is shown in Fig. 8-1[2]. To withstand setback and spin forces, such projectiles usually have wall thicknesses and metal-to-charge ratios greater than optimum for blast or fragmentation characteristics (see pars. **3-3.3** and 3-3.4). Fuze seat liners are desirable to prevent the occurrence of loose explosive in the fuze well (which could constitute a hazard during fuzing, handling, and use).

The armor-piercing projectile shown in Fig. 8-2[2] is presented for historical interest. Now, projectiles of this type contain no explosive filler.

Because the forces to which mortar projectiles are subjected are much lower, they may be designed for more nearly optimum charge-to-weight ratios in accordance with principles outlined in pars. 2-2.3 and 3-3.2. The same holds true for rocket and missile warheads and, for that matter, grenades that are subject to relatively mild forces.

High capacity, high explosive bombs (Fig. 8-3[3]) are thin walled tanks, the thickness of which is no more than sufficient to withstand normal rough handling. As much as 70% of the total weight of such a bomb may be that of the main bursting charge. For fragmentation and target penetration, heavier cases are sometimes used. Land mines are merely packaged explosive charges with fuzing systems (Fig. 8-4[4]). The mine family is as versatile as other munitions, including antitank and antipersonnel mines. Some are armor defeating, some are blast type, while others are fragmenting.

Underwater mines, depth charges, and torpedo warheads are generally relatively thin-walled containers with shapes dictated by structural and pre-explosion functional considerations. These items are usually loaded

*Figure 8-1. High **Explosive** Projectile*

with aluminized explosives to produce high intensity shock waves.

8-1.2.2 HIGH EXPLOSIVE ANTITANK (HEAT) AND HIGH EXPLOSIVE PLASTIC (HEP) AMMUNITION

As pointed out in par. 3-3.5.3, the shaped charge effect of HEAT rounds'results from the progressive collapse of the liner as it is engulfed, from the rear, by the detonation wave (Fig. 8-5[2]). Thus, in addition to requiring a special configuration, a shaped charge must be initiated from the rear in order to form an axially symmetrical detonation wave. Initiation can be from a piezoelectric nose element to a base fuze or by means of a spit-back system as shown in Fig. 7-2. Axial symmetry of the explosive charge is particularly important in HEAT rounds.

The HEP round is one that deforms, to attain intimate contact with a large area of the armor which is attacked, before detonating. The detonation is transmitted to the armor as a shock wave which, upon being reflected, causes the inner surface to spall. Both case and filling of such rounds must deform. It is important that the explosive is initiated from the rear—which is accomplished by an inertia fuze.

8-1.2.3 CHEMICAL AMMUNITION

The main bursting charges of chemical ammunition are no larger than necessary to burst the case and disseminate the contents'. They are usually small diameter cylindrical charges which often extend the full length of the projectile (see Fig. 8-6[2]).

Pyrotechnic ammunition, a special class of chemical ammunition, is designed to produce heat, smoke, or light[6]. It is employed for incendiary effects, screening, illumiation, and signaling.

8-1.2.4 HIGH EXPLOSIVE INCENDIARY (HEI) AMMUNITION

A high explosive incendiary projectile contains an explosive, such as MOX-2B, that produces both an explosive (blast) and an incendiary effect. Its design is similar to that of the straight HE projectile (Fig. 8-1).

8-1.2.5 CLUSTER AMMUNITION

When it is desired to cover an area with an explosive effect, this end may be accomplished by packing a cluster of bomblets into a canister or dispenser. Each of the individual bomblets is a fuzed item of ammunition. The canister itself, acting like a bomb, is fuzed separately to dispense the ammunition. One type of canister fuze initiates a linear shaped charge to cut the canister in half longitudinally so that the bomblets can fall out.

8-1.3 SIZE AND WEIGHT

The total weight and bulk of weapon plus ammunition is limited by the capacity of the means of transportation. In modern warfare, the variety of such means and combinations which might be used is so great that such factors can be considered only in terms of overall operations analysis. The explosive charge designer will usually be given an upper limit of dimensions and weight of the ammunition. Under such circumstances, it is usually

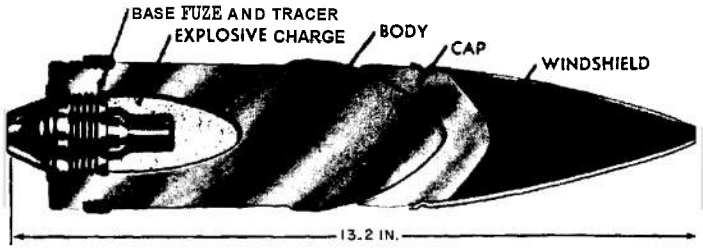

Figure 8-2. Armor-piercing Projectile

best to utilize as much of this weight and space as possible in the main charge. Where a definite tactical purpose is specified, the designer may make a worthwhile contribution if he can show how to accomplish this purpose with a significantly smaller or lighter round. This weight-saving may be used to increase the tactical effectiveness of the system by providing a larger complement of ammunition or by increasing its mobility. In these terms, the smallest and lightest round that will serve the specified purpose is the best design.

Size and weight often are limited by ballistic factors. In gun-fired projectiles, the outside diameter (caliber) is fixed. The length of the round is limited in spin-stabilized weapons 'by considerations of stability. Setback forces and still higher impact forces place such stringent demands on the structural properties of many rounds that only a small fraction of the total weight and space remain for the main charge.

In chemical, flechette, leaflet, and signal ammunition, where the function of the bursting charge is that of releasing and sometimes disseminating nonexplosive items, the bursting charge should be as small as is compatible with the performance of this function. Not only does a larger charge displace some of the principal cargo, it also increases the probability or magnitude of damage to the cargo. The size and composition of bursting charges for such items are determined by the interaction of considerations of case strength, desired area of dispersion, vulnerability of cargo to damage, etc. These considerations are clearly so specifically applicable to particular devices that formulas of general applicability are not feasible.

Let us consider for example, a marker projectile. It is intended to produce a con-

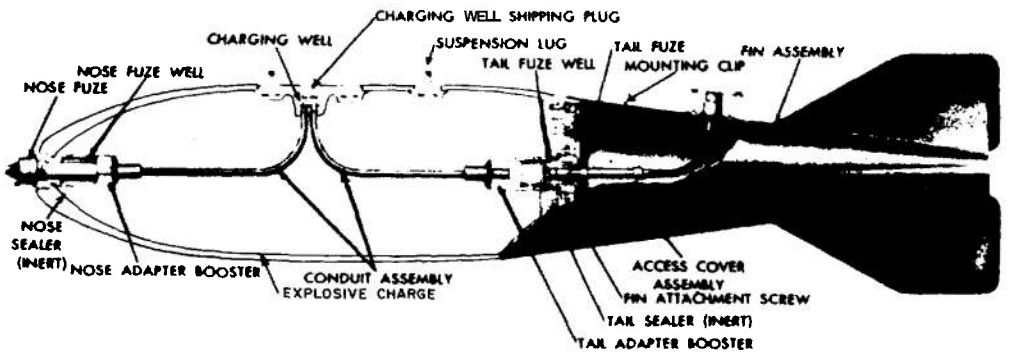

Figure 8-3. General Purpose Bomb

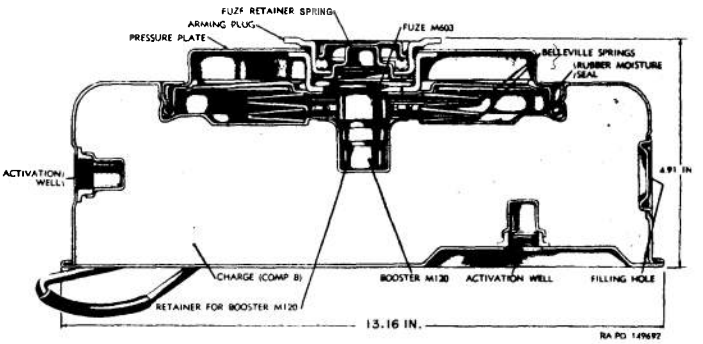

Figure 8-4. Antitank Mine, M 15

spicuous colored cloud, visible for a few minutes, to serve as a signal or marker for ground targets. Red, green, and yellow' markers are standard. Standard projectiles are used with a smoke-producing material. They are loaded by drilling a cavity in the pressed charge and inserting an axial bursting charge.

The smoke material consists of a fine powder, usually dye diluted with a non-reactive agent used as a coolant, such as sodium chloride pulverized to an average 10-micron particle, treated with an appropriate diluent. Typical smoke mixtures used in the 90 mm M71 Projectile are:

1. (Red) 80/20 1-methylamino-anthroquinone/sodium chloride

2. (Yellow) 50/50 dimethylamino-azobenzene/sodium chloride

3. (Green) 40/40/20 auramine hydrochloride/1,4-dimethylamino-anthraquinone/sodium chloride[7].

The bursting charge for this projectile is a cast cylinder of 67/33 baratol. A coating of acid-proof black paint is used on the inner surface of the smoke charge to prevent chemical interaction between it and the baratol bursting charge.

8-2 EXPLOSIVES

8-2.1 SELECTION

The design of explosives for main charges is complex and intimately associated with the terminal effects desired. Moreover, such design falls under the topic of explosive chemistry which is outside of the scope of this handbook. An explosive chemist must be consulted when an unusual application is required. Fortunately, however, sufficient guidelines can be given to permit the explosive charge designer to select the proper explosive for most applications. This is possible because many explosives have been optimized for a particular end use.

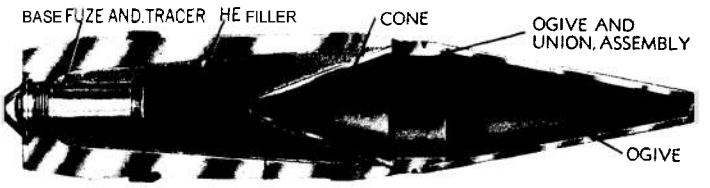

Figure 8-5. High Explosive Antitank Projectile

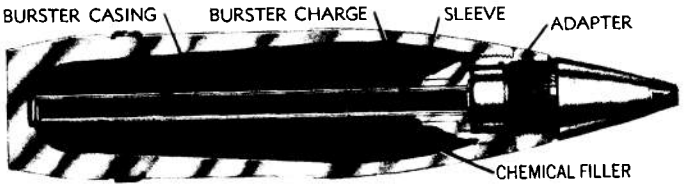

Figure 8-6. Burster Type Chemical Projectile

The common high explosives for main bursting charges are listed in Table 1-1. Their properties are included in AMCP 706-177[d]. Table 8-1 lists the explosives according to their preferred use.

The foregoing discussion is not to imply that the selection of explosives is routine. Due considerations must be given to the factors that follow:

1. Projectile wall thickness is the most important factor in blast vs fragmentation effects. The wall thickness must be matched to the explosive for optimum results. For more detail on the design of terminal effects, see AMCP 706-245[5].

2. For certain applications, plastic bonded explosives (**PBX**) are optimum. As their name implies, the explosives are bonded with a polymer to provide greater cohesive strength. The addition of a polymer permits the use of explosives having greater output without increasing the sensitivity at the same time.

3. Producing a high over-pressure, fuel-air explosives (FAE) are optimum for blast damage'.

4. Minol-2 has been used in place of tritonal as an emergency alternate fill. Forty percent of the TNT content of tritonal is replaced by ammonium nitrate at a reduction in cost without degradation in performance[g].

5. Pyrotechnic ammunition requires many different outputs including smoke, light, flame, and heat. For details, see AMCP 706-188[6].

6. Each particular kind of ammunition has its own special requirements. See AMCP 706-239[10] for small arms, · and AMCP 706-240[11] for grenades.

7. Several recent commercial explosive developments are being considered as alternates for bomb fillers. The utilization of gelled slurries would reduce the quantity'of TNT being used'[2]. Ammonium nitrate/fuel oil mixtures and a number of proprietary compositions are less sensitive. They require a critical diameter above **3** in. for propagation.

8. In rapid fire weapons, like the 30 mm machine gun, cook-off may be a limiting factor on the explosive selected. See par. 4-2.2.

9. Another critical factor is cost. Some of the explosives are very expensive. The designer's cost effectiveness analysis will determine whether the application calls for a cheap noisemaker or for the most effective—and hence most expensive—explosive available.

10. Main charges of some smaller munitions and submunitions are actually booster explosives. An example is Composition A-5 (98.5% RDX plus 1.5% stearic acid).

8-2.2 EXPLOSIVE LOADING

Voids, imperfections, and discontinuities in an explosive charge play an important role in the transmission and propagation of detonation. For example, cast charges, in which the voids tend to be fewer, larger, and farther apart, are appreciably less sensitive to initiation than pressed charges of the same com-

TABLE 8-1

PREFERRED USE OF MAIN EXPLOSIVES

Explosive	Optimized Use
Octol	shaped charge and fragmentation
Comp. B	shaped charge and fragmentation
Minol-2	blast
Tritonal	blast
Comp. A-3	HEP and fragmentation
H6	air blast
HBX3	underwater blast

position and density (Table 3-2). Casting procedures, such as "cream casting", which are conducive to the formation of fine, uniform crystal structure will sometimes increase sensitivity to initiation while improving charge quality at the same time. Other loading techniques are discussed in pars. 10-2 and 10-3.

In general, particle size and particle size distributions that are conducive to the best loading characteristics are also conducive to initiation difficulty. The tendency is for sensitivity to increase with uniformity of particle size and with decreasing particle size. Explosives tend to become less sensitive with increasing density, within the range used in military items. In taking advantage of modern techniques to approach maximum theoretically attainable densities, the designer may lose more in reliability than he gains in performance or safety.

When pouring the energetic binary explosive, consideration of the following factors will yield charges of high quality[3]:

1. The properties of the solid ingredient in TNT-based melts having the greatest influence on charge density and homogeneity are grain size, grain size distribution, and surface characteristics.

2. The viscosity of the colloid-like suspension in TNT-based melts is dependent on melt temperature, agitation, and melt duration, as well as de-aeration during melting and pouring.

3. Several casting methods may be employed, including the conventional pour, sedimentation cast, and vibrated sedimentation cast with and without programmed post-pour conditioning.

4. For critical applications, such as shaped charges, the more elaborate casting methods are superior.

8-2.3 INERT SIMULANTS

When ammunition is subjected to ballistic tests, it is desirable to replace the explosive filler with an inert substance not only for safety and convenience but also to permit recovery of the projectile. The inert simulant must match the physical properties of the explosive so that the ballistics of the projectile will not be changed. Properties of a number of materials having the same strengths and densities as explosives have been tabulated[4]; examples are gypsum, rochelle salt, and glycerides.

8-3 INITIATION

8-3.1 SENSITIVITY

An essential factor in the choice of an explosive for use in main bursting charges of military items is its insensitivity to stimuli incidental to handling, storage, and launching which are discussed in par. 4-3. Such insensitivity is, in general, inseparable from that to purposely applied stimuli. Hence, boosters are usually necessary for the reliable initiation of main bursting charges.

The initiation of a main charge explosive is not always a matter of simple fire-misfire reliability. All main charge explosives (including TNT) are capable of low order detonation under conditions where the probability of complete failure is low. Thus, the problem of main charge initiation is that of reliably initiating high order detonation. Experimental

investigations of this aspect should include output determinations, such as a fragmentation test'[4].

The design of boosters for the reliable initation of main charges is discussed in par. *3-3.2.* The relative booster sensitivity of various explosives is given in Table 4-2. Other comparisons appear in Tables 3-2 and 3-3. When a less sensitive explosive is to be substituted in a main charge, the adequacy of the booster must be verified.

8-3.2 BOOSTER POSITION

Since detonation is transmitted between charges through their adjacent surfaces, the reliability and effectiveness of transmission is directly related to the area of the surfaces (see par. 3-1.2). Hence a booster that intrudes into a cavity in the main charge is more effective, other conditions being equal, than one which can communicate only through its end.

Intuitive reasoning leads to the expectation that gaps and barriers will be detrimental to the transmission of detonation. However, as pointed out in par. 7-2.5, they have been observed under some circumstances to be useful means of increasing reliability and effectiveness. It may be suspected that the booster cups (provided primarily as containers) combine with the clearances provided for ease of assembly to make service items as effective as they are, although relatively few designs have been consciously optimized from this point of view. Where improvements in manufacturing techniques or design changes make it possible to reduce clearances between boosters and fuze wells, such reductions should be made only after determining that they will not affect reliability adversely. Similarly, changes in booster cup and fuze seat liner materials should be considered in this respect.

8-3.3 AUXILIARY BOOSTERS AND BOOSTED SURROUNDS

When fuzes of several intrusion lengths are to be used in a main charge, the fuze well must, of course, be deep enough to receive the longest fuze. In such cases, auxiliary boosters, usually pellets contained in thin-drawn sheet metal containers, are used to fill the space left when shorter fuzes are used. Where the boosters of existing fuzes are inadequate, auxiliary boosters may be used, or a relatively small fraction of the main charge, immediately surrounding the booster, may be loaded with a more sensitive explosive than the rest of the charge. These supplementary charges are sometimes referred to as boosted surrounds. TNT surrounds have been used with amatol main charges in 105 mm howitzer projectiles' and Composition A-4 boosted surrounds are used in 40 mm projectiles loaded with MOX type explosives'[6]. In these examples, the insensitive main charge explosives are employed for reasons other than safety (which would be adequate for the items named if they had been loaded entirely with the explosive used in the boosted surround). Relative advantages of various designs, from this point of view, must be considered in terms of desired terminal effects'.

8-3.4 CONFINEMENT

Confinement has a great effect on the sensitivity of an explosive charge (see par. 3-2.2.4). Because of the relatively high cost of statistical experiments with loaded full-scale ammunition, data are scarce. However, there is every reason to expect that the trends indicated in initiators also apply to larger charges. It is reasonable to expect that the same explosive similarly loaded will be more sensitive in projectiles than in bombs, and in armor-piercing projectiles than high capacity projectiles. For items as heavily confined as projectiles, smaller projectiles are probably more easily initiated than larger ones, if the booster diameter remains constant. On the other hand, for nonmetallic mines, that are rather poorly confined, the self-confinement provided by the surrounding explosive probably makes larger items more sensitive.

While it is thus clear that confinement enhances the explosive output, it should never be depended upon to help in cases of marginal performance.

REFERENCES

a-k Lettered references are listed in the General References at the end of this handbook.

1. MIL-STD 709, *Ammunition Color Coding,* Dept. of Defense, June 1960.

2. TM 9-1300-200, *Ammunition, General,* Dept. of Defense, October 1969.

3. TM 9-1325-200, *Bombs and Bomb Components,* Dept. of Army, April 1966,

4. TM 9-1345-200, *Land Mines,* Dept. of Army, May 1966.

5. AMCP 706-245 (C), Engineering Design Handbook, *Ammunition Series, Design for Terminal Effects (U).*

6. AMCP 706-188, Engineering Design Handbook, *Military Pyrotechnics, Part Four, Design of Ammunition for Pyrotechnic Effects.*

7. S. D. Stein and Paul B. Tweed, *Development of Shallow Cavity Red Marker Shell for 90 MM Guns,* Report TR 2294, Picatinny Arsenal, Dover, N.J., August 1956.

8. L. H. Smith, *Fuel Air Explosive Warhead Design Criteria (U),* Report NWC TP 4732, Naval Weapons Center, China Lake, Calif., September 1970 (Confidential report).

9. S. J. Lowell, M.E. Pollack, R. T. Schimmel, *Evaluation of Minol-2 as a Bomb Filler,* Report TR 3830, Picatinny Arsenal, Dover, N.J., December 1968.

10. AMCP 706-239 (S), Engineering Design Handbook, *Small Arms Ammunition (U).*

11. AMCP 706-240(C), Engineering Design Handbook, *Grenades (U).*

12. Shepherd Levmore, *Principal Characteristics of the Gelled Slurry Explosive DBA-22M,* Report TR 4237, Picatinny Arsenal, Dover, N.J., July 1971.

13. N. E. Berkholtz, *Pouring Explosive Charges of High Quality,* Honeywell, Inc., Hopkins, Minn., April 1970 (AD-869 273).

14. *The Physical Properties of Explosives and Inert Materials Whose Physical Properties Resemble Those. of Explosives.* Journal Article 17.0 of the JANAF Fuze Committee, 1 March 1960 (AD-468 070).

15. M. E. Pollack and D. E. Seeger, *Study of Initiation of High Explosives by Booster Pellets,* Report TR 1956, Picatinny Arsenal, Dover, N. J., 17 September 1953.

16. S. M. Adelman, P. B. Tweed, and J. D. Hopper, *Study of Loading of MOX-2B into 20 MM Shell and Acceptance Tests of Cartridge Containing Projectile Filled With This Explosive,* Report TR 1935, Picatinny Arsenal, Dover, N.J., 11 May 1953.

CHAPTER 9

OTHER EXPLOSIVE CHARGES

9-1 ACTUATORS

9-1.1 DESCRIPTION

Actuators are explosive devices that produce gas at high pressure in short periods of time into a confined volume for the purpose of doing work. They are small, reliable, one-shot devices well suited to remote control of small movements such as switch closures. Most actuators are electrically initiated. Hence, their initation mechanism and their input characteristics are those of electric initiators described in par. 5-2.4.

A dimple motor is similar in construction to an electric detonator except that the bottom is concave and the explosive is a small gas producing charge (Fig. 9-1). The pressure of the gas liberated by the reaction inverts the end to a convex surface. A typical dimple motor imparts a 0.10-in. movement against an 8-lb load. The relatively complex curvature of the dimple, as well as accurate control of metal condition, is necessary for reliable and satisfactory functioning[1].

The lower cups of bellows motors are metallic bellows'. A typical bellows motor (Fig. 9-2) moves 1 in. against a 10-lb load. In addition to linear movement, bellows motors may be used to give a rotary movement. They have been made to work against loads as large as 100 lb.

In a piston motor, the gases generated by the explosive push a piston in the cup or housing that acts as a cyliner. Piston motors can be as small as bellows motors or considerably larger, depending on the output desired. A larger driver (Navy nomenclature) is shown in Fig. 9-3. Gas is generated by two electrically-initiated actuators (Navy nomenclature for gas-producing squibs) that ignite propellant powder. The actuators are duplicated for increased reliability. The gas pressure pushes the piston out. There are two seals: (1) the thin frangible section ahead of the piston face protects the assembly during storage; it is sheared when the piston starts to move, and (2) the O-ring retains the gas behind the piston. The protective caps, added for handling purposes, are removed before operation.

Each of these motors has been used to open or close switch contacts or to provide other mechanical movement. A number of units have been designed containing a motor and a series of switch contacts within a single unit. The one shown in Fig. 9-4[f] has six double-pole, single-throw, normally-closed switches attached to the same slider. Other switches in the XM-60 series have other combinations of normally open and normally closed contacts. Devices designed for other mechanical functions are rarely if ever used in ammunition. Such devices—including cutters, pin pullers and pushers, valves, catapults, and ejectors—are treated in AMCP 706-270[3].

An interesting variation in a switch is the pyroswitch that has no moving parts, and hence, is not strictly an actuator. The pyroswitch (Fig. 9-5) is based on the fact that certain mixtures of gasless powders are nonconductors of electricity before burning but good conductors after burning. This is an open-to-closed switch. The reverse (closed-to-open) also has been developed.

Nonelectric actuators are based on pull-

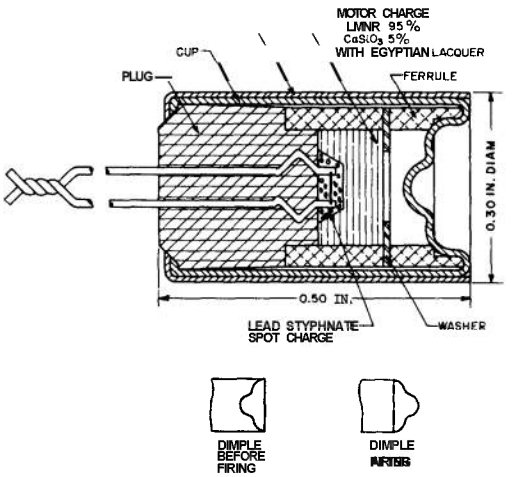

Figure 9-1. Motor, Dimple, T3E1

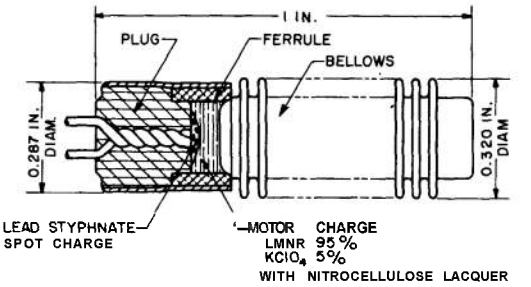

Figure 9-2. Motor, Bellows, T5E1

type igniters. They have been developed to perform delayed mechanical functions, as in parachutes.

A table has been prepared listing some sixty actuators used in fuzes[4].

9-1.2 OUTPUT CHARACTERISTICS

The usable output from the explosive charge of an actuator is the work accomplished by the expansion of the gases liberated as it burns. The magnitude of this output has been computed for propellant actuated devices based on assumptions of adiabatic conditions and no motion before powder burn-out[3].

For most design purposes, simple scaling of charge size to requirements from existing items will suffice. In such scaling, the quantity of charge should be proportional to the pressure or force desired for constant volume, to the volume for a constant pressure, or to the energy requirement. In dimple motors, the quantity of explosive used is so small that it presents measuring difficulties in production. One means of alleviating these difficulties is that of using a mixture containing a small percentage of a gas producing material (3% nitrostarch) with an essentially gasless mixture (lead selenium). Recent developments in the design and production of initiating elements have made it possible to use lead styphnate for dimple motor charges. Lead mononitroresorcinate, that produces only about one-third as much gas as lead styphnate, has been used for bellows motors.

In dimple and bellows motors, that have appreciable internal free volumes before movement, the rapid burning of materials like lead styphnate and lead mononitroresorcinate is tolerable. In the usual piston motor, however, the rapid buming of these materials within the small free volumes would cause the pressure to rise above the burning point. Smokeless powder of the sporting arm type has been effective'. Detonation, of course, would be disastrous in any actuators, so azides and other detonation-prone materials are avoided.

Often squibs can be used as actuators. Actuators can also incorporate one of the various delays discussed in par. 6-1.2.1.

9-1.3 EXPLOSIVE BOLTS

Explosive bolts are a convenient means for separating subassemblies which, up to the instant of desired separation, must be firmly attached. Stage separation of multistage missiles is a typical application. Explosive bolts are to two types, high-explosive and low-explosive.

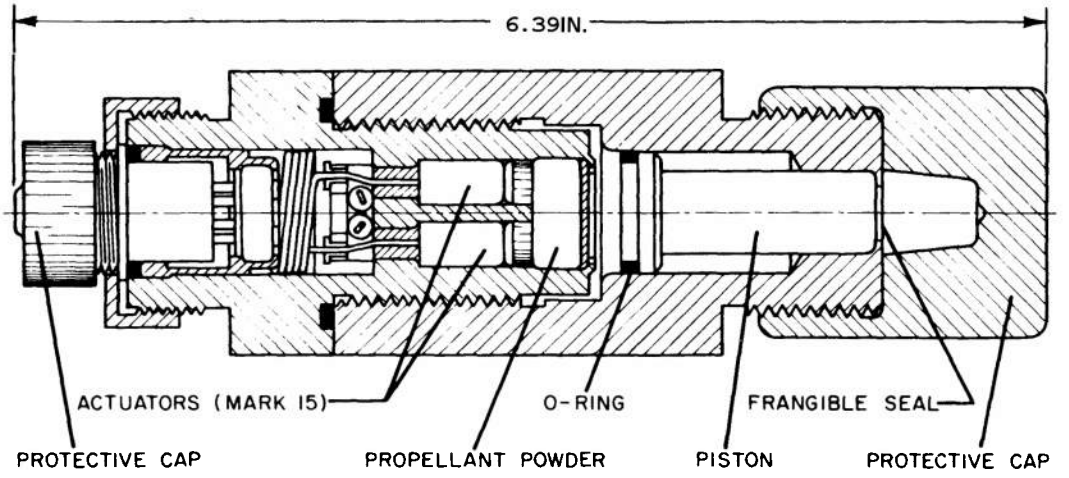

Figure 9-3. Driver, Explosive, MARK 12 MOD 0

9-1.3.1 HIGH-EXPLOSIVE BOLTS

As the name implies, a high-explosive bolt is a hollow bolt that contains a charge of high explosive. The charge may be permanently placed, or more conveniently, in a removable cartridge. When detonated, the high explosive generates a shock wave that will exceed the ultimate tensile strength of the bolt at the base of the bore thereby resulting in failure at that point. In its most rudimentary form, a high-explosive bolt would function by merely loading it with enough high explosive to shatter it upon firing. A bolt of this description might serve some purposes but, in most applications, its use would subject nearby components of the system to damage by fragments.

A more suitable type of bolt then is one that parts at a predetermined surface and is otherwise essentially intact. One method of attaining this end is that of so weakening the bolt at the intended breaking point that it may be severed by an explosion too weak to do other damage. A circumferential notch or groove will accomplish this purpose. Most high-explosive bolts have been designed by industry. Hence, little is known about the important parameters that affect the fracture mechanism. Data on notch position, depth, bottom radius, and on type and amount of explosive are not available.

By taking advantage of the interactions of reflected tension waves and the rarefactions that follow detonation induced shocks, it is possible to design an explosive bolt of nearly the full strength attainable in the diameter used that will break along a predetermined surface. A shock wave in a condensed medium is reflected from a free surface as a tension wave. The shock produced by a detonation tends to retain the pressure-time profile, and hence the pressure-distance profile of the detonation itself. This profile is sharply peaked, so that the shock is followed closely by a rarefaction. The interactions of these reflected tension waves with one another, and with the rarefaction waves behind the detonation, induce fracture[6]. Such interactions are utilized in the explosive bolt illustrated in Fig. 9-6.

Since all high-explosive bolts shatter, the danger of fragments is inherent. The military therefore prefer a low-explosive bolt.

9-1.3.2 LOW-EXPLOSIVE BOLTS

In contrast to a high-explosive bolt, the low-explosive bolt depends on the generation

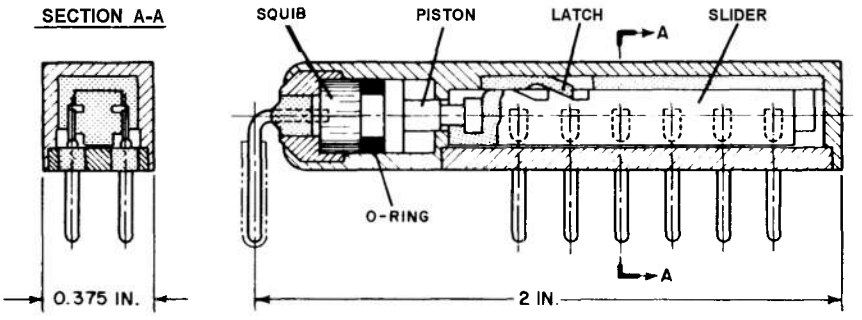

Figure 9-4. Switch, Squib Actuated, Non Delay, XM60

of pressure in the bolt cavity. Sufficient internal pressure will cause a tension failure in the bolt material as a result of the internal pressure working against the piston area represented by the cross section of the bolt bore. The low-explosive bolt then is in fact a special piston motor (see par. 9-1.1). It is designed like other actuators[3] and has also been the subject of special studies[7]. Low-explosive bolts generally result in a break having minimum swelling of the bolt parts and practically no fragments.

9-1.3.3 EXPLOSIVE NUTS

Explosive nuts are nuts housed in a bonnet that fractures in the same manner as explosive bolts.

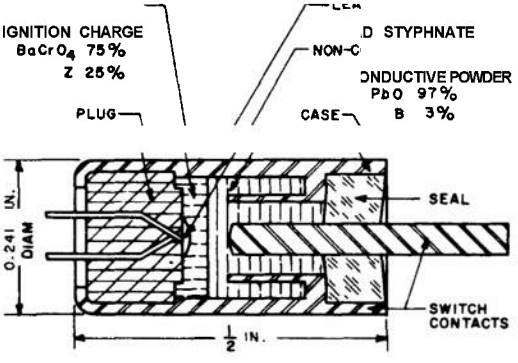

Figure 9-5. Pyroswitch

9-2 DEMOLITION DEVICES AND ACCESSORIES

9-2.1 DESTRUCTORS

The destruction of equipment, either to prevent it from falling into enemy hands or to halt further functioning of a missile that has gone out of control, is accomplished by explosive devices called destructors. Destructors are also used as complete initiating systems for improvised mines, demolition devices and the like. A wide variety of explosive destructors has been devised to accomplish such destruction. Destructors vary in size and shape depending upon their specific applications.

A typical destructor, the Universal Destructor M10, is shown in Fig. 9-7[8]. The principal portion is the pair of booster cups. The one nearer the activator bushing contains tetryl pellets with a center hole for the insertion of the activator while the other one contains solid tetryl pellets. A bushing with two different external threads permits the device to fit most fuze cavities. The input end of the destructor can accommodate a firing device and blasting cap combination, a firing device and activator combination or a blasting cap, electric or nonelectric.

Construction of such a manual destructor as the M10 differs greatly from that of destructors that are built into missiles or classified components. The large explosive

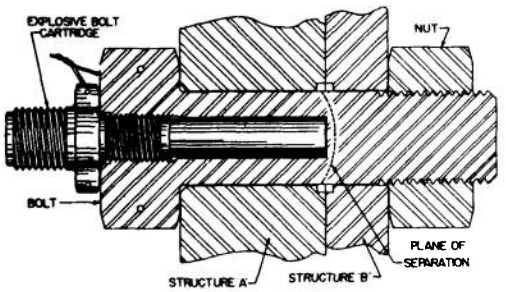

Figure 9-6. Explosive Bolt in Which Reflected Tension Waves Are Utilized

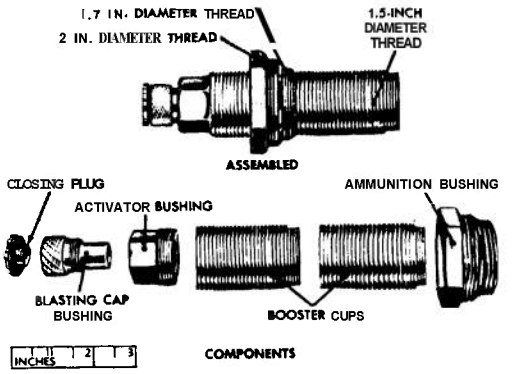

Figure 9-7. Destructor, Universal, M 10

charges required for these purposes must be as safe to handle as those of the main charges. Further, accidental functioning of such charges must be precluded as definitely as that of the main charges. For these reasons, large destructors are essentially special fuzing systems that have their own explosive trains and safety devices. Hence, destructors that form a part of a weapon system are designed in the same manner as the functioning components of the system. The destructor is usually tucked away into whatever free space is available.

9-2.2 EXPLOSIVE CORDS, CAPS, AND SHEETS

9-2.2.1 EXPLOSIVE CORD

For many years cordeau detonating fuse, a lead-bound TNT core fuse, had been used for detonating multiple charges with a single detonator. This fuse, now obsolete, was prepared by loading a lead tube with TNT and drawing the tubing down to a greatly reduced diameter. The detonation velocity of cordeau fuse, about 5000 m/sec, compares with a value of approximately 6500 m/sec for its replacement, a textile covered cord having a core of either PETN or RDX. The textile is waterproofed with water-resistant fillers and may be reinforced with a wire or cord binding and may be plastic coated. Because cordeau fuse has a weight disadvantage, requires an expensive tubing process, and contains TNT of comparatively low sensitivity, the new detonating cord has replaced almost completely the lead-bound fuse in the United States'. Core loading is from 20 to 400 grains/ft.

While the textile-covered cord has many advantages and is widely used in the blasting industry, its use cannot be tolerated where brisance and noise level are to be minimized. In such instances, a recently developed cord, initially designated low-energy detonating cord (LEDC) must be employed. This consists of an explosive detonation-conveying cord, comprising a metal sheath that encases a continuous core of high explosive. A covering of fabric or coating of a flexible plastic material may be employed around the plastic sheath. With PETN, this cord has been made in loadings from 0.1 to 50 grains/ft. Recently developed cords also offer increased resistance at higher temperatures.

The textile-covered cord has been assigned various names, depending on such factors as the degree of shielding of the cord and the user's prerogative, including for example, mild detonating cord (MDC), miniature detonating cord (MDC), mild detonating fuse (MDF), and flexible linear shaped charge (FLSC). These are all general designations that have been used to identify metal-sheathed material with or without fabric/plastic covering. Confined mild detonating cord (CMDC) refers to basic MDC overwrapped with alternating layers of a

fibrous yarn material and plastic. Shielded mild detonating cord (SMDC) refers to basic MDC covered with a thin fibrous overbraid and contained in a thin-walled metal tube. Of all these designations, the most common is MDC. MDC is covered by MIL-C-50697[10].

Except for flexible linear shaped charge (see par. 9-2.2.2), detonating cords simply detonate along their length. MDC is used principally as a transfer media in explosive trains and in explosive forming. FLSC is used in such special applications as cutting, welding, stage separation of rockets, and separation of special and large-caliber ammunition stages. The use of MDC in explosive testing is discussed in par. 12-2.1.3.1 .

Where MDC is to be used to transmit detonation between a detonator and a charge of booster explosive, the limitations of transmission of detonation between small and large columns of explosive, discussed in pars. 3-1.2 and 7-2.5, must be considered. A series of mild end primers is available for use with MDC.

9-2.2.2 FLEXIBLE LINEAR SHAPED CHARGE

When MDC is drawn into a V shape, it becomes a flexible linear shaped charge (FLSC): In this form its action is like that of a shaped charge operating along its entire length. The collapse mechanism of FLSC is complex. It consists of the formation of a discrete jet followed by a slug of housing material[1].

FLSC is used widely in metal cutting operations. In one application, it circles bomblet dispensers. When detonated, the charge cuts the canister in half so that the bomblets can fall out.

Although not flexible, linear shaped demolition charges operate on the same principle. For example, Charge XM184 consists of V-shaped pieces of Comp. B, 7.25 in. long. Specifically developed to fell large trees, several charge pieces are attached to ring the tree trunk[12].

9-2.2.3 BLASTING CAPS

Blasting caps are just like detonators but have a greater output to initiate dynamite and other insensitive main charges directly. They also are used in field assembly of an explosive train, mainly for demolition purposes. The nonelectric blasting cap is set off by the flash from a fuse, see par. 5-2.3 for input considerations. The electric blasting cap is initiated by a blasting machine, see par. 5-2.4 for input considerations. The output, discussed for detonators in par. 5-3.2, applies as well. The military blasting caps are designated M6[13] and M7[14] for electric and nonelectric types, respectively.

9-2.2.4 SHEET EXPLOSIVE

Flexible sheet explosive is a mixture of PETN with some additives. This material has the consistency of a vinyl floor covering and can be cut with a sharp knife or razor blade. Sheets can be obtained in various sizes and of various thicknesses. Extrusion in other shapes are also available. Blasting caps are recommended for initiation.

9-2.3 DEMOLITION BLOCKS

Composition C-4 and its variants are hand moldable mixtures of RDX with various other solids that form a putty-like moldable plastic explosive. Properties of these materials are given in Tables 3-2 and 4-2. The materials are available in bulk form and in the form of demolition blocks[15]. With reasonable care, the material from the demolition blocks may be remolded into almost any desired shape without appreciable reduction of density from the 1.50 g/cm^3 of the blocks. For mock-up experiments, Composition C-4 at this density resembles many of the standard main charge explosives closely enough in output characteristics (par. 3-3) that experiments with such mock-ups can be very useful for the early investigation of design concepts.

Where simulation of explosives of higher performance than that of Compostion C-4 at a density of 1.5 is desired, it can be consolidated to a density of 1.6 or higher, with relatively low ram pressures, if vacuum techniques are used. Where less brisant materials are desired, military dynamites LVD[16] and MVD[17] may be used.

REFERENCES

a-k Lettered references are listed in the General References at the end of this handbook.

1. F. K. Van Arsdel, *Development of an Improved M4 (T3) Explosive Dimple Motor,* Report TR 2689, Picatinny Arsenal, Dover, N.J., June 1960.

2. F. K. Van Arsdel, *Development of an Improved M6 Explosive Bellows Motor,* Report TR 2648, Picatinny Arsenal, Dover, N.J., October 1959.

3. AMCP 706-270, Engineering Design Handbook, *Propellant Actuated Devices.*

4. *A Survey of Explosively Actuated Devices Used in Fuzes,* Journal Article 20.0 of the JANAF Fuze Committee, September 1960 (AD-222 604).

5. E. E. Kilmer and M. J. Falbo, *The Development of the XE-16A Actuator, Explosive, as a Replacement for the MK 1 MOD O Actuator, Explosive,* NAVORD Report 6111, Naval Ordnance Laboratory, Silver Spring, Md., 26 May 1958.

6. J. Savitt, R. H. Stresau, and L. E. Star, "Compression Wave Velocity Experiments With Copper", J. Applied Physics, **10,** 1307-11 (1954).

7. R. C. Sutter, *Development of Release Bolt, Nonfragmentation,* Report R-1645, Frankford Arsenal, Philadelphia, Pa., June 1962 (AD-291 769).

8. TM 9-1375-200, *Demolition Materials,* Dept. of Army, January 1964.

9. *Mild Detonating Cord,* Joumal Article 44.0 of the JANAF Fuze Committee, 3 May 1967 (AD-816 229).

10. MIL-C-50697, *Cord, Detonating,* Dept. of Defense (Note: supersedes MIL-C-17124).

11. G. A. Hayes and T. L. Herling, *Optical Metallography of Linear-Shaped-Charge Fragments,* Report TP 4859, Naval Weapons Center, China Lake, Calif., July 1970.

12. POMM 1375-358-10 (PA-DCS), *Charge, Demolition: Shaped, Linear, XM184,* Picatinny Arsenal, Dover, N.J., July 1966.

13. MIL-C-45468 (MU), *Cap, Blasting, Electric, M6,* Dept. of Defense.

14. MIL-C-4569 (MU), *Cap, Blasting, Non-Electric, M7,* Dept. of Defense.

15. T. W. Stevens, D. E. Seeger, D. H. Stone, *Development of the M5 and M5A1 Demolition Blocks,* Report TR 2332, Picatinny Arsenal, Dover, N.J., August 1956.

16. B. J. Zlotucha, *Preparation of Low-Velocity Military Dynamite on a Semi-plant Scale,* Report TR 2576, Picatinny Arsenal, Dover, N.J., November 1958.

17. C. E. Jacobson and B. J. Zlotucha, *Development of a Military Dynamite Equivalent to Commericial Dynamite,* Report TR 2239, Picatinny Arsenal, Dover, N.J., February 1956.

CHAPTER 10

LOADING AND FABRICATION

10-1 PROCESS SELECTION

Most solid high explosives are manufactured by processes that yield granular material. Their bulk densities are generally somewhat less than 1 g/cm^3. They are used in military applications as solids of well defined configurations, usually at densities between 1.5 and 1.7 g/cm^3.

The two principal loading techniques are casting and pressing. All explosives in common military use can be pressed. However, those that are castable are usually cast because of the greater convenience and flexibility of this process. As a rule of thumb, main bursting charges of large caliber munitions are cast while small explosive components (initiators to boosters) are pressed.

More pounds of military explosive are cast than are loaded by all other processes. Essentially, the casting of an explosive involves only melting it and pouring it into a charge case or mold. In practice, like most fundamentally simple processes, the procedures necessary to cast charges of the quality needed for acceptable performance and safety can become quite elaborate. A suitable pour viscosity is of over-riding importance.

The most common procedure for pressing powdered explosives is that of pouring the powder into a mold and pressing it with a ram that fits snugly. The pressure most frequently specified for charges used in military items is 10,000 psi. Charges may be pressed directly into their containers or pressed into molds and ejected as pellets. Where they are pressed into containers of lengths greater than the diameter, the explosive is usually loaded in increments.

After pressing or casting, it is sometimes necessary to machine explosives, either to provide a smooth surface or a fuze cavity at the filling hole, or to produce complex contours required for some specialized purposes. In some cases, mating contours of two charges are cemented together. Cavities are also formed using a special tool on final pressing.

Of increasing importance are the plastic bonded explosives (PBX) These are exactly what the name implies, and like plastics can be obtained in many different forms. Hence, PBX's are available for casting, pressing, or extruding. They vary from rigid to rubbery consistencies depending on the type of plastic used as the binders–thermoplastic or thermosetting–and the degree of polymerization permitted. High mechanical strength and high thermal stability are possible'.

Other considerations for process selection include fabrication facilities and suitability of the explosive for its intended application.

10-2 CASTING

10-2.1 PROJECTILE PREPARATION

As part of the manufacturing process, the interior wall of the projectile is sprayed with paint or varnish, primarily to prevent rusting of the projectile in storage. The requirements of the coating are that it be compatible with the explosive, adhere well to the projectile wall, and offer a good bonding surface for the explosive. The latter requirement is necessary

to prevent rotation of the charge relative to the spinning projectile. The finished coating at the base of the projectile should be thin enough to assure thorough drying and be sufficiently smooth to eliminate irregularities that could otherwise form air pockets.

The molten explosive is usually poured through a funnel-former. This tool is specially designed to furnish the desired surface contour upon removal and to hold a sufficient reservoir of molten explosive to replenish the shrinking, cooling mass beneath it. A thin film of silicone grease is applied sometimes to the former to aid in its release when the explosive has solidified.

10-2.2 EFFECT OF CASTING PROCEDURE ON CHARGE CHARACTERISTICS

10-2.2.1 POROSITY AND CAVITATION

The porosity of an explosive charge is usually introduced by two principal causes, entrained air bubbles and dissolved gases, and shrinkage that occurs as the charge solidifies and cools. The higher the temperature of casting and the more fluid the melt, the larger is the fraction of the entrained air that forms into bubbles and floats out of the charge. On the other hand, these conditions maximize cavitation due to shrinkage. The most serious effect of shrinkage is that known to metal founders as "piping". The casting solidifies from the outside and consequent shrinkage is that of an isolated mass at the center where no additional material is available to fill the volume left by the shrinkage. The result is a single large void at the center of the casting.

In a cast charge (unlike in a pressed charge), both density and pore or cavity size are determined by the casting procedure. Both of these factors must be considered by the designer in terms of their effects upon safety, reliability, and performance.

10-2.2.2 CRYSTAL SIZE

The crystals of TNT in cast explosives may vary from microscopic size to a substantial fraction of the size of the charge, depending upon casting conditions and procedure. The approach known as cream casting (par. 8-2.2) results in very fine crystals. In mixed explosives, which usually are cast in the form of slurries, the solid particles tend to inhibit crystal growth, although TNT crystals sometimes apparently grow around the particles of the slurry. The effects of particle size on initiation sensitivity, failure diameter, and performance characteristics (see par. 3-2.2) also have been observed to apply to crystal size in cast TNT.

10-2.2.3 UNIFORMITY OF COMPOSITION

Most castable explosives are poured as slurries of RDX, aluminum, etc., in molten TNT. The instant a charge is poured, the particles of higher density than TNT start to settle, and those that are lighter start to rise. As a result, by the time the material solidifies, its composition varies from point to point within the charge. Another cause of non-uniformity of composition is the tendency of TNT to form essentially pure crystals, leaving other components of the mixture at grain boundaries and in the center of the charge that usually solidifies last. The most serious production problem of this kind is the settling of aluminum in larger charges of aluminized explosives. The use of aluminum and other additives in very fine particle sizes can help to alleviate this problem but also tends to increase pouring difficulties because of the higher viscosities of the melts.

10-2.3 STANDARD CASTING PROCEDURE

The most common procedure for filling a projectile or bomb case is to do so in a single pouring[2]. In loading projectiles, a funnel or sprue provides a reservoir of molten explosive to fill the volume left by the shrinkage. The explosive in the funnel must, of course, remain liquid and in communication with the center of the charge. When the filling hole is large enough, convective heat transfer main-

tains such conditions. In other instances, however, such conditions can be maintained only by means of steam heated funnels, steam finger, or hot probes.

Where the maintenance of a clear channel between sprue and the slowest freezing part of a charge is impractical, cavitation is avoided by casting charges in layers, each of which is allowed to "crust over" before pouring the next.

TNT melts at 81°C. It forms eutectics with RDX, tetryl (68°C), PETN (76°C), and other "impurities" in the mix and makes these materials more soluble at higher temperatures. Thus, there is a general tendency for the solid content and, hence, the apparent viscosity of most castable mixtures to decrease as the temperature is increased. However, a reversal of the tendency toward the reduction in viscosity has been noted in Composition B when it heated above 100°C.

From the eutectic or melting point, the composition of the liquid portion and its viscosity vary as heat is removed. It has been recommended that the heat content of any explosive be reduced, before pouring, to the minimum compatible with the avoidance of air entrainment. This practice can be followed when an experienced operator is available.

TNT may be cast after it has cooled to a point where a fairly large fraction of it has solidified to form a slurry of very small crystals. Such a slurry is obtained by stirring it as it cools, as in the making of chocolate fudge. TNT cast in this manner is labeled by some as creamed TNT. Some have applied the term creamed to all explosives that are cast after stirring until the last possible instant. Extreme caution must be taken to avoid air entrapment during stirring. This technique has the advantage of resulting in less shrinkage on cooling and solidification because a large portion of the TNT is already solid before casting.

10-2.4 SOME SPECIAL CASTING TECHNIQUES

10-2.4.1 PELLET CASTING

For very large charges, cooling time is reduced and shrinkage minimized by use of precast pellets. The best pellet casting technique is that of pouring a quantity of molten explosive into the case, and then pouring in pellets, slowly enough so that they are not in contact with one another to avoid entrapping interstitial air[2]. Although pellet casting reduces the total amount of shrinkage voids, it makes it nearly impossible to maintain channels to the pockets of molten material. The most important advantages of pellet casting is the reduction of cooling time and minimizing of shrinkage in large charges. Pellet casting is not used in loading artillery projectiles because of the development of cavities.

10-2.4.2 VACUUM MELTING AND CASTING

Entrainment of air may be avoided by melting and casting under a vacuum. Vacuum melting is a fairly straight-forward procedure in the vacuum kettles that are maintained by many loading facilities (see Fig. 10-1). Vacuum casting requires specially designed molds or a vacuum chamber large enough to contain both kettle and mold. The definite increase in the cast density should indicate without question the advantage of vacuum melting, namely, an increase in viscosity of the vacuum melted material. Nevertheless, a divergence of opinion exists regarding the value of vacuum melting followed by pouring in air. Some investigators report results nearly as good as those obtained with complete vaccum melting and casting. Others maintain that so much air is entrained in the casting process that the value of vacuum melting is negligible. A possible explanation for this difference of opinion is the difference in techniques that can be applied in various types of operation.

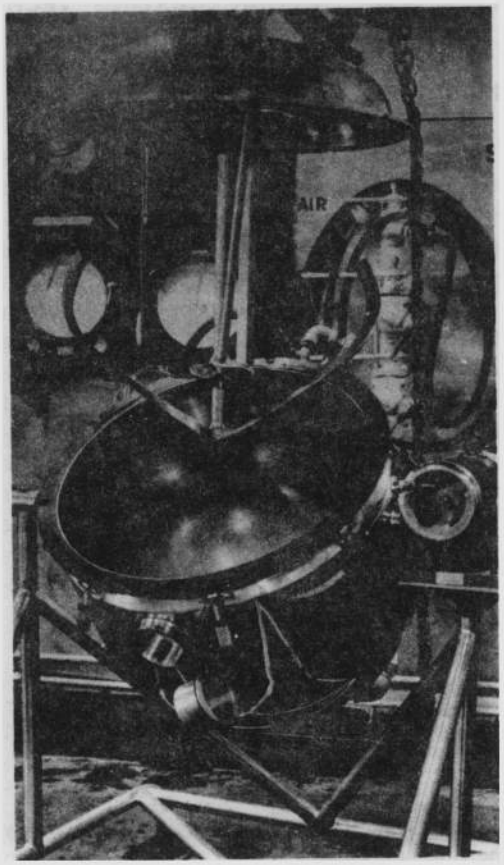

Figure 10-1. Vacuum Casting Kettle

10-2.4.3 VIBRATION, JOLTING, AND CENTRIFUGAL CASTING

Accelerating of a cast charge after pouring but before solidification will often expedite the movement of air bubbles to the surface[3]. Vibration and jolting often break the surface tension that causes bubbles to cling to surfaces[2]. Centrifugal acceleration, of course, also accelerates the settling of denser components of mixtures[2]. This has been used to advantage in loading **HEAT** ammunition where it is desirable to have a richer composition of the more energetic compounds (RDX and HMX) around the cone in cyclotol or octols.

10-2.3.3 CONTROLLED COOLING

If an explosive charge can be induced to cool from the bottom up, maintaining a nearly plane interface between liquid and solid, densities well in excess of 99% of maximum theoretical are attainable. In a complicated programmed cooling, the thermal cycle of preheating the mold, pouring, and cooling takes over forty hours[4]. At the other extreme is the use of strategically placed insulation to cause a charge to cool in the approximate desired pattern.

10-2.4.5 EXTRUSION

Extrusion may be considered a form of casting under pressure. In applications where cylindrical charges are required, some plastic bonded explosives can be extruded into the desired shape and then placed or pressed into the ammunition housing. Conventional extrusion tools are employed for this process.

10-2.4.6 LIQUID EXPLOSIVES

From the standpoint of casting, the pouring of liquid or slurry explosives is handled in the same manner as that of molten explosives. The process is simpler in that pouring takes place at ambient temperature. However, care must still be taken to avoid entrapment of air. Liquid filling can be speeded up by pumping. If slurries are to be gelled in the ammunition, the gelling agent is introduced just ahead of the cavity[5].

10-3 PRESSING

10-3.1 STANDARD PROCEDURES

10-3.1.1 MEASUREMENT OF EXPLOSIVE CHARGES

For small test quantities or for some premium quality production, direct reading one-pan balances are used. They are faster than analytical balances and provide an accuracy within one percent. Automatic weighing machines are also available.

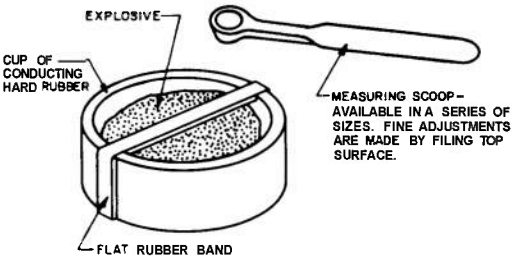

*Figure 10-2. **Scoop** Loading*

The desire is always to load a specific weight of explosive. This objective can be achieved to a sufficient degree of accuracy for many purposes by volumetric. control, as in commerical blasting caps and squibs. The two most common volumetric measuring devices are scoops and charging plates. Scoops (Fig. 10-2) are filled and leveled against a rubber band. Careful scooping is accurate within 4%. Charging plates (Fig. 10-3) lend themselves to production rates. After filling holes in the top plate and scraping off the excess, plates are aligned with cup holes. Since explosive quantities are usually specified by weight, it is left to the loading plant to adjust the volume measured so as to take into account bulk density. There are now several automatic volumetric loading devices for production loading of primer mixes and lead azide used in initiators.

10-3.1.2 DIRECT PRESSING IN CASE

A large proportion of explosive charges are loaded by direct pressing of explosive charges in cases (Fig. 10-4)[a]. Fits and tolerances of explosive charge cases and loading tools are determined by reconciliation of three opposing factors:

1. Production costs of components rise sharply as tolerances are reduced.

2. Powdered explosives tend to flow into the clearance between ram and case. In addition to creating a hazard, the explosives wedged in this space can increase the frictional resistance to ram movement, and substantially decrease real loading pressure.

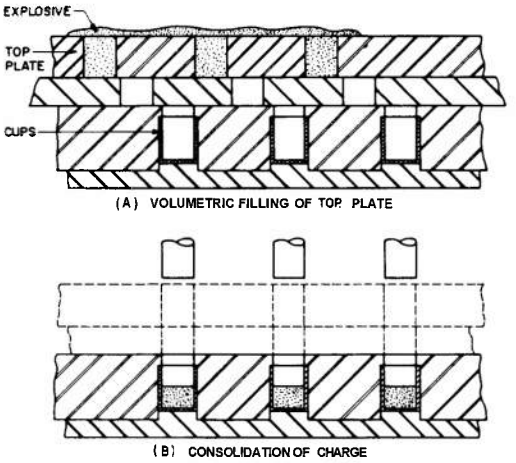

Figure 10-3. Charging Plate Loading

3. Interference between ram and case results in binding (which may be so severe as to prevent any pressing of the explosive), damage to the case, inclusion of chips of case material in the explosive, or all of these.

The cost of a set of loading tools may be distributed over a large number of items. For this reason, they are often made to fits and tolerances similar to those used for gages[6]. Where cases are made by processes such as forging, drawing, and extrusion, which use most of the tolerance in lot-to-lot variation, some loading activities have found it worthwhile to maintain a series of loading tools of graduated dimension, using those giving the, best fit possible with each lot of cases.

Production loading tools should be hardened (60 Rockwell C is common). The die should be ground, honed, and lapped or polished to an 8 or 16 rms micro-inch finish. Some claim better results if the final operation involves longitudinal rather than rotary motion.

The friction between the explosive and the

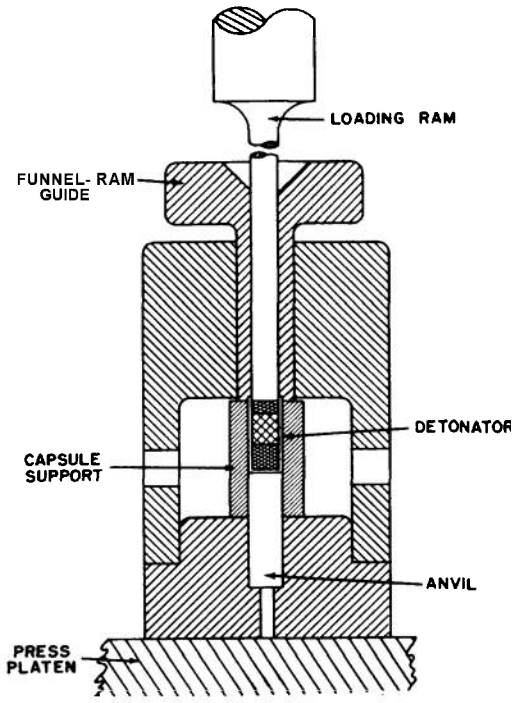

Figure 10-4. Detonator Loading Tool

walls causes a gradient of pressure, and hence density, decreasing from the face of the ram. The slope of this pressure gradient, of course, is proportional to the coefficient of friction between the explosive and the walls, which varies with both explosive and case material and also with the interior finish of the case[4]. As a general rule, the density variations due to these gradients are kept within reasonable bounds by adherence to the general rule-of-thumb that the length of an increment after consolidation should not exceed the diameter of the cavity.

The usual loading pressure of about 10,000 psi is well beyond the bursting strength of charge cups of any material that can be economically deep drawn. Hence, cups are supported by close fitting loading tools while being pressed. Most of the difference between the cup diameter before and after loading is accounted for by the expansion of the explosive component, relieving residual stresses, as it is pushed out of the tool. For this reason, loading tools should be made to fit the maximum outside diameter of the cup, within a few ten-thousandths of an inch. Standard dimensions and tolerances of cups are listed in MIL-STD-320[h]. Bore finish and hardness of the bushing are important factors in trouble-free ejection of finished cups. Lapped or honed bores are often specified. Where cases are heavier or where explosives are to be loaded directly into fuze cavities, the interactions of case and tool tolerances, which may be sufficient to cause interference between the ram and any of the bores through which it passes, should be considered carefully. In some situations, where explosives are to be loaded directly into fuze holes, the most practical way to attain alignment is to use a pin or dowel, similar to the loading ram, to hold the component in alignment with the ram guide while it is being clamped in place. It is best to use an alignment pin a thousandth of an inch or so larger than the loading ram. Fig. 10-5[a] shows a set-up for hand loading of leads making use of an alignment ram and a mandrel.

10-3.1.3 STOP VS PRESSURE LOADING

In production, it is possible either to press a controlled quantity of explosive to a controlled height (called stop loading) or to apply a given load to a loading ram of a given diameter (called pressure loading). The inherent variations in production material introduce a certain amount of error in the density obtained by either method.

The relationship between loading pressure and charge density for commonly pressed explosives is given in Table 10-1[a]. An approximation of the loading densities of six commonly used explosives is shown in the nomograph, Fig. 10-6[7]. The pressure-density relationship varies somewhat from lot to lot. In addition, loading density is affected by such factors as ram clearance and increment length.

From the usual cup tolerances, it has been

TABLE 10-1

LOADING DENSITY OF VARIOUS EXPLOSIVES

Explosive	Pressed (pressure kpsi) 3	5	10	12	15	20	Cast	Crystal Density
Composition A-3	1.47	–	1.61	1.65	–	–	–	–
Composition B	–	–	1.59	–	–	–	1.67	–
Cyclonite (RDX)	1.46	1.52	1.60	1.63	1.65	1.68	–	1.82
EDN-A (Haleite)	–	1.39	1.46	–	1.51	1.55	–	1.71
Explosive D	1.33	1.41	1.47	1.49	1.61	1.64	–	1.72
Lead Azide	2.46	2.69	2.98	3.05	3.16	3.28	–	4.68
(2 specimens)	2.62	2.71	2.96	–	3.07	–	–	–
Lead Styphnate (Norm.)	2.12	2.23	2.43	2.47	2.57	2.63	–	3.1
Pentolite, 50-50	–	–	1.59	–	–	–	1.65	–
PETN	–	1.48	1.61	–	–	–	–	1.76
Picric Acid	1.4	1.5	1.57	1.59	1.61	1.64	1.71	1.76
Picratol, 52/48	–	–	–	–	–	–	1.62	–
Tetracene	1.05	1.22	1.33	1.37	1.41	1.48	–	4.72
Tetryl	1.40	1.47	1.57	1.60	1.63	1.67	–	1.73
TNT	1.34	1.40	1.47	1.49	1.52	1.55	1.59	1.65

(Densities are in g/cm^3.)

calculated that the cross-sectional area of the explosive column of a detonator may vary by two or three percent. In normal production, a reasonable weighting tolerance for initiator charges is three or four percent. Thus, in stop loading, assuming that the height of an increment is exactly reproduced, the density may vary as much as seven percent.

The implication of the foregoing, that densities are more readily controlled by the control of loading pressure than by stop loading, has been borne out by experience. However, the production advantages of stop loading are sufficient to outweigh any theoretical disadvantages. It is important for stop loading to specify dimensions, quantities, and tolerances such that the maximum pressure is within limits imposed by tool strength. When items so loaded are used, safety and reliability determinations should take the effects of variable charge density into account. In either type of loading, a check of the loading density for each production lot is highly desirable.

When density is determined by pressure loading, variation in pressure, cross-sectional area, and charge weight each have an effect upon the column height. Usually, the length tolerances specified cannot be held merely by holding the various quantities mentioned within their tolerances. The weight of explo-

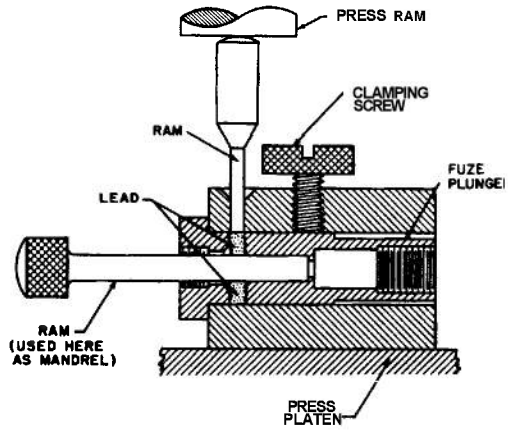

Figure 70-5. Tool for Direct Loading of Component

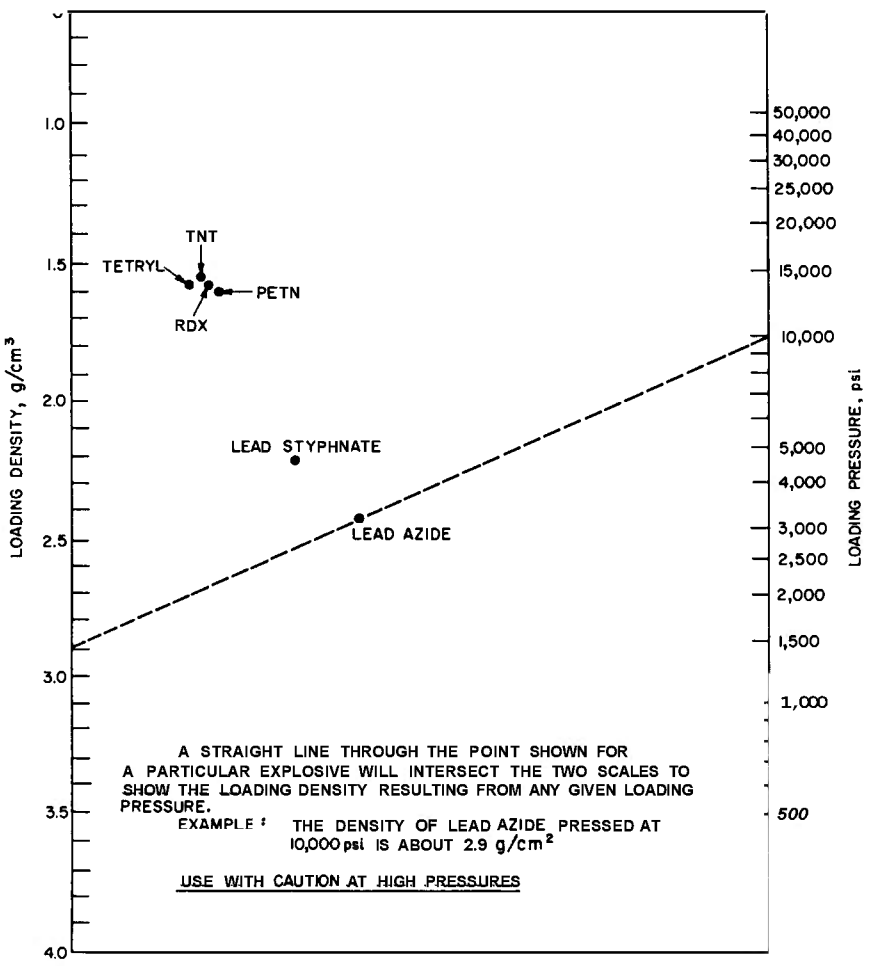

Figure 10-6. Nomograph of Loading Pressure and Density

sive must be adjusted to compensate for the other variables. Commonly, the last charge loaded is adjusted to fit the space remaining for it and the weight is specified as "approximate".

In addition to the pressing properties of the explosive as such, the relationship between loading pressure and density is affected by such factors as ram movement, clearances, increment size, and the coefficient of friction between explosive and case. The movement of the ram affects the relationship in two ways.

The first effect may be very serious. Where a balance or dead weight is used to determine the loading pressure, a rapid ram movement can result in a force due to acceleration of the masses moved which may vary from a substantial fraction to several times the force due to gravity. Analyses of some loading operations have revealed that the true loading pressure was three or four times that intended.

The second effect of ram movement usually works in the opposite direction (slower ram speeds plus a dwell at the peak pressure may

cause an increase in density). This effect is due to the-fact that, at loading pressures usually used, explosives are stressed beyond their yield points and creep or flow plastically. This effect, of course, becomes more important at very high pressures, such as those used for delays. In addition to increasing the density, slower speeds plus dwell of the ram result in a more uniform density.

10-3.1.4 PELLETIZING

Most powdered explosives that are to be pressed are prepressed into pellets. The die of the loading tool permits closer tolerances and better finishes than are reasonable for cases that are loaded by direct pressing. Exceptions are primer mixes, PETN, and lead azide, although lead azide is pelleted in Canada on a production basis.

Although pellets for experimental use are loaded by single operation methods in which weighed charges are pressed either by stop loading or by controlled pressure techniques, quantity production of pellets is accomplished in automatic pelleting machinery, in which the explosive is metered volumetrically by the controlled movements of punches (Fig. 10-7). Single stroke presses of the types used for explosives produce about 90 pellets per minute while rotary presses have rates of about 700 pellets per minute.

The density gradient resulting from wall friction, in addition to its effects on explosive performance, may adversely affect the handling properties of pellets. Pellets consolidated from powders at low densities tend to be weak in two ways; their resistance to body fractures is often less than desirable, and they may crumble at corners and chalk off at surfaces. On the other hand, some materials become brittle and develop residual strains at high densities.

The effect of density variation on mechanical properties of pellets may cause difficulties even though the variation in explosive properties is tolerable. On the other hand, the

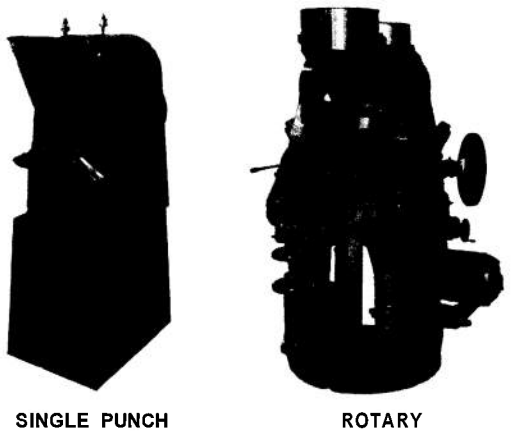

Figure 10-7. Pelleting Presses

general superiority of the finishes of pelleting molds over those of charge cases and the use of double acting loading equipment result in somewhat smaller density gradients in pellets than in direct loaded explosives. The result of these counterbalancing trends is that the one-to-one limiting ratio of length to diameter which applies to increment loading also applies to pellets. For some materials, somewhat shorter pellets are desirable, particularly in larger sizes.

The diameter of a pelleting die may be maintained to almost any tolerance specified. Similarly, the distance between the top and bottom punches of an automatic pelleting machine, or the punch-to-heel distance in a stop pressing tool, can be held to any desired tolerance. Thus, the dimensional variations are essentially the variations in expansion of the material, during and after ejection from the die. The immediate expansion upon ejection for a typical explosive used for pressed pellets is about 0.3%. Pellet-to-pellet variations are usually less than 0.1% but the expansion continues with storage at a rate that varies appreciably with conditions as well as with the composition of the explosive. Pellets of an explosive of known expansion characteristics, which are to be inserted into

cups within a few hours after pelleting, may be held to dimensional tolerances of the order of 0.1% or less. However, tolerances of 0.3 to 0.5% are more practical.

Variations in density reflect variations in dimensions with those of the bulk density and flow characteristics of the explosive, and those of the measured volume. With frequent pellet density determinations and occasional adjustment of the pelleting press, explosives with good flow properties can be pressed into pellets reproducible in density to **1%** in an automatic pelleting press.

10-3.1.5 RECONSOLIDATION

Frequently, when it is desirable to attain the close confinement and continuity characteristic of explosives loaded directly into their cases, it is difficult or inconvenient to do so. In such instances, pellets are inserted into the cavities and reconsolidated by pressing. In designing for reconsolidation, consideration must be given to the tolerances and variations of hole dimensions, pellet weight, and pressuredensity relationship that enter into the determination of the relative location of the surface through which the reconsolidation pressure is applied. Where this dimension is critical, the reconsolidation is done to a stop so ,that the tolerances appear in the density of the reconsolidated pellet. When reconsolidation is specified, the effects of these variations upon performance should be considered.

10-3.2 SPECIAL PROCEDURES

10-3.2.1 VACUUM PRESSING

In the usual pressing operation, in which a granular explosive is pressed from a bulk density of about half the crystal density to about 95% of the crystal density, the pressure rise in the interstitial gases (assuming isothermal compression and no leakage) may be in the neighborhood of 200 psi. The air may be presumed to diffuse out of the pellet, through the continuous pores, quite rapidly after the pellet is ejected or the ram is removed, if it has not already leaked through the clearance between ram and cavity during pressing.

When densities reach 99% of crystal density, the calculated pressure of the interstitial gases rises rapidly, limiting attainable densities. When under conditions of pressing, the explosive or some component of it is caused to flow plastically, the pores may be closed into individual bubbles in which the compressed gases are retained to cause excessive growth after pressure removal or pellets that pop open like muffins when ejected from the die. In an open pore material, the relatively mobile gases tend to increase density gradients by distributing pressure without a correspondingly even distribution of the solid explosive. For these three reasons, vacuum pressing is used where very high or uniform densities are required, or where significant plastic flow is anticipated during pressing.

Fig. 10-8[4] is a diagram of a vacuum loading tool. First, lower and top punches are advanced to a prepress position to compact the powder slightly. After evacuating to 1 mm Hg, full pressure is applied. Production of extremely high quality charges of TNT (pressed at elevated temperature) and Composition A-3 (both at elevated and room temperature) has been reported[4]. Density spreads within 6-in. diameter charges are 0.005 g/cm^3.

10-3.2.2 HOT PRESSING

The unique properties of plastic bonded explosives are realized most fully if they are pressed at elevated temperatures. Appropriate temperatures of course, are determined by the properties of the plastic bonding agents used and limited by the thermal instability of the explosives. Temperatures as high as 130°C have been used'. When heated to temperatures approaching their melting points, explosives and additives used in explosives, like most solids, are more prone to plastic flow. Equipment required for hot pressing of **PBX** has been found useful in the production of

high density charges of conventional explosives. TNT is pressed routinely to a density of 1.62 g/cm^3 at 70°C in the vacuum pressing process previously described, whereas cast densities this high are unusual[4]. Preheating of the explosive is more efficient than waiting for it to heat in the mold but cannot be used when thermosetting resins serve as binder.

10-3.2.3 HYDROSTATIC AND ISOSTATIC PRESSING

When an explosive is pressed in a die by means of a ram, the friction of the walls tends to cause pressure and density gradients. In addition, the onedimensional compression can result in an anisotropic structure and produce pellets with residual strains. Where dimensional stability, uniformity and high density are essential to performance, hydrostatic pressing and isostatic pressing have been used. In both of these processes, the explosive is compressed by the action of a fluid, from which it is separated by a rubber (or other elastomer) film.

In hydrostatic pressing, the explosive is placed on a solid surface and covered with a rubber diaphragm (Fig. 10-9). Although this process eliminates the gradients which result from wall friction, some directionality of compression remains which can result in anisotropic structure and residual strains. In isostatic pressing, the explosive is placed in a rubber bag (Fig. 10-10) that is surrounded by the pressurizing fluid so that the compression is essentially three dimensional.

In addition to the production of high quality charges, hydrostatic pressing and isostatic pressing can be used to consolidate explosives which are so sensitive that frictional contact with the walls of a conventional mold creates a hazard. Materials like pure RDX, of which it is difficult to make firm pellets except in small sizes, can often be pressed hydrostatically or isostatically' .

Hydrostatic pressing and isostatic pressing are usually applied to explosives that have

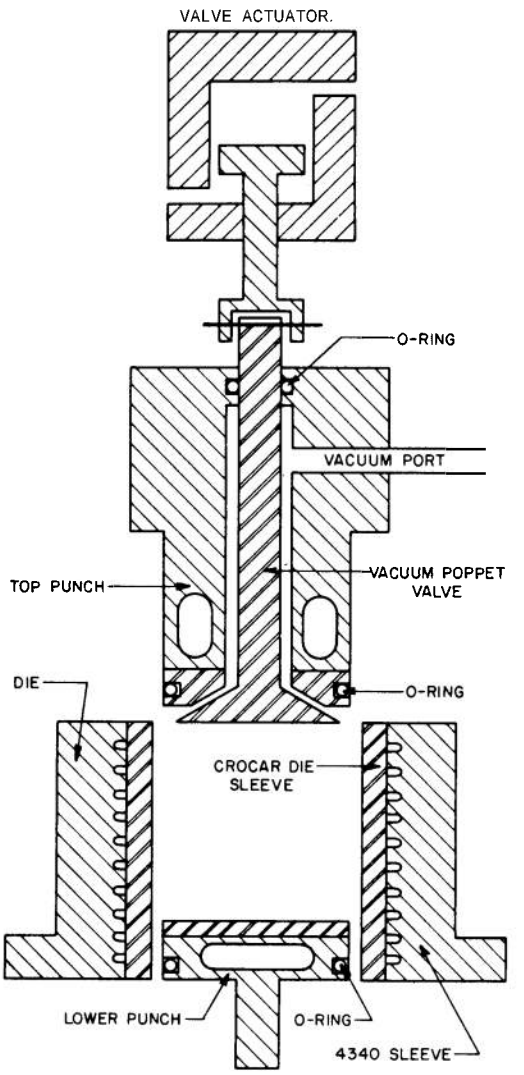

Figure 10-8. Vacuum Pressing Apparatus

been evacuated, frequently at elevated temperatures. Temperatures up to 130°C and pressures up to 30,000 psi have been used. The surfaces where pressure is applied through elastic membranes are, of course, of relatively poorly defined form and dimensions. Hence, these pressing processes must almost invariably be followed by machining.

10-3.2.4 PULSATING PRESSURES

Experiments have shown that pressures

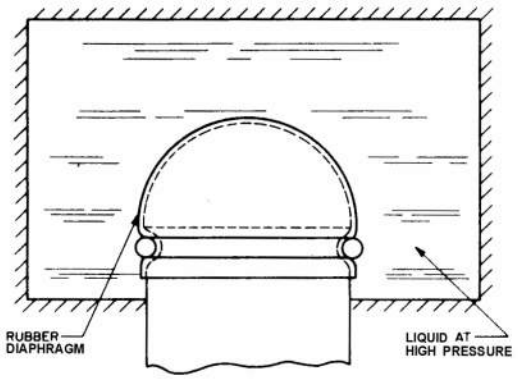

Figure 10-9. Hydrostatic Press Principle

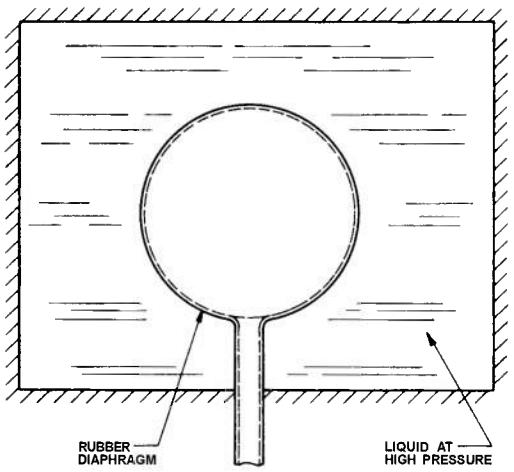

Figure 10-10. Isostatic Press Principle

which pulsate with an amplitude of a few percent of the static pressure and at a frequency of about 60 Hz, when used with conventional molding tools, make it possible to produce pellets four or five diameters long with negligible density gradients. The interesting possibilities of this technique in production of explosive charges have not yet been exploited.

10-4 FINISHING OPERATIONS

10-4.1 MACHINING

It has been found that the most uniform densities and compositions are attained by pressing or casting relatively large charges, and machining the charges needed from selected segments. Similarly, high quality charges can be made by isostatic or hydrostatic pressing, which also must be followed by machining operations. All standard machine shop operations--including milling, drilling, sawing, boring, and turning--are applied in this work.

Many cast loaded items are filled through the same hole as that into which the fuze is to be inserted. After casting, the sprue is broken off. Although it is a good plan to design the funnel to form a core for the fuze cavity, the problem of funnel extraction limits this practice to some extent. At best, then, the bottom of the fuze cavity is a rough, broken off surface and, generally, the cavity is not as deep as desired. The boring of fuze cavities to the specified depth and surface finish is a routine operation of production.

Profile lathes and forming tools may be used to form almost any desired surface of revolution. The special forms required for detonation wave shaping and other specialized output are often generated by such means. Explosives may be machined to the same tolerances as metals. Turning and milling to a thousandth of an inch is not difficult with a good machine. However, the practical applicability of such precision is limited by the dimensional instability of most explosive materials.

Safety is an important aspect in machining explosives. Since, as pointed out in par. 2-3.1, the sensitivity of an explosive has meaning only in terms of the specific initiating impulse, the practice mentioned of machining each explosive material by remote control is most desirable[4]. On the basis of test data it is considered safe to machine Composition **A-3**, Composition B, and TNT at 200 ft/min surface speed.

Cut-off tools and small drills are more

hazardous because of the poor cooling conditions. These operations, if necessary, should be performed at low speeds with intermittent cutting and frequent flushing. Water should be used wherever practical as a coolant, although tests at high speed under dry conditions are considered justification for dry machining where needed. The water keeps explosive dust out of the air and cools the cutting operation.

10-4.2 CEMENTING OF COMPOUND CHARGES

Explosives charges made of more than one explosive, in which the contour of the boundary is an important design parameter, often are fabricated from cast, pressed, or machined components that are cemented together.

Cements that harden by the loss of solvent generally are to be avoided because the solvent can be lost only by diffusion through the explosive. Diffusion may be slow and the solvent may modify the properties of the explosive. Two types of cement that have been used for this purpose are catalytic setting cements, like epoxy resins, and contact cements. Compatibility of the materials to be used should be checked. Compatibility of epoxy resins with most explosives depends upon the catalyst or hardener used[9]. Data regarding bond strengths and other pertinent properties also have been compiled[10,11].

Both surfaces to be cemented should be clean and fit accurately to one another. A minimum continuous layer of cement should be applied to each surface to be joined. Where catalytic resins are used, provision should be made to hold the members in firm contact for the curing period. When contact cements are used, mechanical means are desirable to assure that the elements are in the proper position and orientation when they make the first contact.

10-5 SUITABILITY

10-5.1 AVAILABILITY

The criteria upon which explosive materials and fabrication processes must be chosen are suitability for use in military materiel, availability, and suitability for a particular application.

Some materials and techniques are inherently more expensive than others and should be applied only where the advantages to be gained are clearly worth the added cost. In this respect, it is well to remember that such costs are reflections of demands on specialized manpower and strategic materials so that, in a total war, they represent proportional fractions of the total available military potential. In other cases, the most suitable materials and techniques are so new as to be available only for laboratory quantities of items.

Availability of an explosive involves more than the existence of plant capacity and raw materials suitable for economical production. The material must have been approved for military use and quality control criteria must exist. Government policy discourages the use of proprietary materials, especially those protected by trade secrets.

The explosives of military interest, with their properties and other details, are listed in Ref. d. The existence of a Purchase Description or Specification may be taken as evidence of the general availability of amaterial for military use. These purchase documents contain many details about the explosive including quality assurance criteria.

The production of a high explosive compound usually requires a specialized and often elaborate plant. Before specifying a compound or a mixture, the designer should assure himself that the necessary plants exist or will exist at the time the item he is designing reaches the production stage.

Mixtures are more easily made and generally require only the simplest apparatus. In a sense, the availability of a mixture may be considered that of its ingredients. The prevalence of this viewpoint is the reason many mixtures have been specified only by notes on drawings giving their compositions. Mixtures so specified usually perform satisfactorily. However, the properties of mixtures, particularly their sensitivities, may be affected by the mixing procedures. Also, in the absence of specified procedures and quality assurance mixtures may be less uniform than desirable. For this reason, some take the view that each mixture is a unique explosive. Whenever possible, it is wise to use mixtures that have been standardized[d]. The most common mixtures are listed in Table 10-3 while priming composition are shown in Table 5-1.

Pars. 10-2 to 10-4 describe casting, pressing, and finishing operations and, hence, indicate the kind of facility that must be available for fahrication.

10-5.2 OUTPUT CHARACTERISTICS

Explosives differ from other forms of stored energy in that the rates at which they liberate energy as well as the forms in which it is liberated are less subject to control by design and more uniquely by properties of the materials in which the energy is stored. For this reason, the total amounts of energy liberated in their reaction, although of importance in evaluating explosives, is not necessarily a final criterion of relative effectiveness in any particular application. Other properties, such as the detonation velocity or detonation pressure, combine with energy to define the effectiveness of an explosive. A number of these properties are tabulated in Table 10-2 for explosive compounds and in Table 10-3 for explosive mixtures.

Although the effectiveness of an explosive material in any particular application is the result of the interaction of quantities such as those listed in Tables 10-2 and 10-3, quantitative calculation of effectiveness in various applications is difficult and often impossible. Some of the quantities are directly determined by composition. Others are affected by the state of aggregation of the explosive which, in turn, is determined partly by loading techniques and conditions.

The aspect of the state of aggregation which has the most effect upon output is loading density (see pars. 3-2.2.1 and 10-3.1.3). In general, the effects of density are greatest in applications such as fragmentation and, in particular, shaped charges where the detonation pressure is an important factor.

10-5.3 SENSITIVITY

The term sensitivity is often applied as if it were some fundamental property of an explosive like its melting point. The fact is that sensitivity test results are meaningful only in terms of the test method employed (see par. 3-2.1.1). If one considers the complex series of events and the many factors involved in the initiation process, this is hardly surprising.

Sensitivity tests that are of interest to the designer are of two types: (1) general laboratory tests, chosen for convenience, reproduciblity, and correlation with experience whereby the sensitivity of various explosives to such stimuli as impact, friction, and static electricity may be evaluated, compared, and ordered, and (2) tests that are designed to simulate a specific hazard to which the explosives may be exposed. The results obtained in the two types of tests are tabulated in Tables 4-2 and 4-3. The various tests are described in par. 12-2.1.2.

Some of the tabular data are directly applicable to the design of safe and reliable materiel. Other aspects of safety are not subject to quantitative evaluation or prediction. Predicting the abuse to which ammunition may be subjected under extreme conditions of stress is a difficult task.

Even the more obvious data in the tables

TABLE 10-2

FUNDAMENTAL CHARACTERISTICS OF EXPLOSIVE COMPOUNDS

Explosive	Crystal Density g/cm³	Melting Point °C	Heat of Combination cal/g	Heat of Explosion cal/g	Gas Volume cc/g	Detonation Velocity m/sec	Loading Density g/cm³	Detonation Pressure Mbar	Failure Diameter[d] in.
Ammonium Nitrate	1.73	170	346	346	980	1000	0.9	–	–
Cyclonite (RDX)	1.82	204	2285	1280	908	8780	1.65	0.255'	–
Diazodinitrophenol	1.63	157	3243	820	865	–	–	–	–
Explosive D (Ammonium Picrate)	1.72	265[a]	2890	800	–	6850	1.55	0.145'	–
Haleite (EDNA)	1.71	175+[a]	2477	1276	–	7570	1.49	0.173'	–
Lead Azide	4.80	a	630	367	308	4600	3.0	0.922'	–
Lead Dinitroresorcinate (LDNR)	3.2	265[b]	–	270	–	–	–	–	–
Lead Styphnate	3.02	260-310[b]	1251	457	368	5200	2.9	0.126	–
Nitroglycerin (Liquid)	1.59[e]	2.2&13.2	1616	1600	715	8000'	1.6'	0.241'	–
Nitroguanidine	1.72	232	1995	721	1077	7650	1.55	0.160'	–
PETN (Pentaerythritol Tetranitrate)	1.77	141	1960	1385	790	8300	1.70	0.253'	–
Picric Acid	1.76	122	2672	1000	–	7350	1.71	0.187'	–
Tetryl	1.73	130	2925	1080-1130	760	7170	1.53	0.196[c]	<0.5
TNT (Trinitroluene) (Cast)	1.65	81	3620	1080	730	6825	1.56	0.170'	1

[a] Decomposes
[b] Explodes
'From Ref. 12 by interpolation
[d] From Ref. 13
[e] Density of liquid at 25°C

should be applied with caution. For example, given the maximum setback acceleration, it is possible to compute the maximum setback pressure by assuming the explosive to behave as a liquid and applying Pascal's Law. Comparison of this pressure with the setback sensitivity data of Table 4-3 might be expected to give some measure of the safety of the weapons against bore prematures. However as pointed out in pars. 4-2 and 4-3, the probability of such prematures is a function of a number of aspects of weapon design and loading procedure as well as the choice of explosive, condition of the explosive charge as a result of environmental conditioning, and existing ambient temperature.

Hence, the data presented in Tables 4-2 and 4-3 are offered as aids to, rather than substitutes for, judgment of the designer in the choice of explosives that will result in safe and reliable military materiel.

10-5.4 CHEMICAL AND PHYSICAL PROPERTIES

The fundamental chemical and physical properties of explosives are, of course, important in determining explosive characteristics. They are listed in Ref. d. Aside from these, the most important chemical characteristics to the designer are the reactions of explosives with other materials with which they may come into contact. For a condensation of compatibility data, including the more usual combinations, see Table 4-5.

An example of a compatibility problem is

TABLE 10-3

FUNDAMENTAL CHARACTERISTICS OF HIGH EXPLOSIVE MIXTURES

Explosive	Composition	Ratio	Density g/cm³	Melting Point °C	Heat of Combustion cal/g	Heat of Explosion cal/g	Gas Volume cc/g	Detonation Velocity m/sec	At Loading Density g/cm³	Detonation Pressure Mbar	Failure Diameter[c] in.
Amatol	NH_4NO_3/TNT	80120	1.46	[a]	1002	490	930	4500	1.46	0.074	–
Amatol	NH_4NO_3/TNT	50150	1.59	[a]	1990	703	855	6420	1.55	0.160	–
Baratol	$BaNO_3$/TNT	64/33	2.55	[a]	–	–	–	–	–	–	1.5
Composition A-3	RDX/Wax	91/9	1.65	–	1210	–	–	8100	1.59	–	–
Composition B	RDX/TNT/Wax	60/40/1	1.65	–	2790	1240	–	7840	1.68	0.243[b]	<0.5
Composition C-3	RDX/...	77/...	1.6	–	–	–	–	7626	1.6	–	–
Composition C-4	RDX/...	91/...	1.5	–	–	–	–	8040	1.59	–	–
Cyclotol	RDX/TNT	75/25	1.71	[a]	2625	1225	862	8030	1.70	–	–
Cyclotol	RDX/TNT	70130	1.71	[a]	2685	1213	854	8060	1.73	–	
Cyclotol	RDX/TNT	60/40	1.68	[a]	2820	1195	845	7900	1.72	–	–
Minol-2[d]	NH_4NO_3/TNT/Al	40/40/20	–	81	3160	1620	–	5820	1.68	–	–
Pentolite	PETN/TNT	50150	1.65	76	–	1220	–	7465	1.66	0.233[b]	–
Pentolite	PETN/TNT	10190	1.60	76	–	–	–	–	–	–	–
Picratol	Expl. D/TNT	52148	1.62	[a]	–	–	–	6970	1.63	–	–
Tetrytol	Tetryl/TNT	75/25	1.59	68	–	–	–	7385	1.60	–	–
Torpex	RDX/TNT/Al	42140118	1.79	[a]	3780	1800	–	7495	1.81	–	–
Tritonal	TNT/Al	80120	1.79	[a]	4480	1770	–	6475	1.71	–	1

[a]Essentially the melting point of the TNT component (81°C)
[b]From Ref. 12 by interpolation
[c]Ref. 13
[d]Ref. 14

lead azide that is subject to a certain amount of hydrolysis in the presence of moisture. The hydrazoic acid formed reacts with most metals to form metallic azides. The safest practice is to avoid contact of azide with any metal except the preferred stainless steel and aluminum alloys.

Exudation is a phenomenon related to the chemical characteristics of TNT bearing explosives against which safeguards must be taken (see par. 4-2.1.4). Because of the similarity of many of the impurities to the parent explosive, multiple component eutectics are formed which melt at ordinary storage temperatures and exude from the charge in an oily form.

Physical properties pertain to the structural strength of the explosive. Plastic bonded explosives were developed for their physical properties that are far superior to those of cast or pressed nonplastic bonded explosives.

10-6 QUALITY ASSURANCE

10-6.1 BASES FOR TOLERANCES

Safety, reliability, and performance of an explosive charge are determined by such design quantities as dimensions, composition, and loading density. Limits or tolerances must be stated for each quantity specified. The designer's responsibility with respect to tolerances does not stop with the assurance that

the specified tolerance will be satisfactory. It includes determinations of the maximum limits or tolerances compatible with requirements for safety, reliability, and performance. The tolerance specified should be determined in the light of the following considerations:

1. Production costs are inversely related to tolerance limits. The form of this relationship varies with quantity specified, complexity of the item, process used, and equipment available. Small tolerances should be specified only on the basis that the benefits which accrue are worth the cost.

2. Where compliance with tolerances required for satisfactory performance is too expensive in terms of the cost and value of the item, an investigation should be made of possible design modifications to permit greater variations in the quantity considered.

3. The measurement of quantities which may be specified in a design is limited in precision.

The designer will often be called upon to classify defects as critical, major, or minor, and to specify AQL levels for various defects. The basis and procedure for such classification and specification, as well as the sampling procedures that are used in inspection, are given in MIL-STD-414[15]. In essence, as applied to most explosive charges, critical defects are those that result in hazards to users, major defects are those that cause failure, and minor defects are those that do not materially affect usability.

10-6.2 FACTORS AFFECTING QUALITY OF EXPLOSIVE CHARGES

10-6.2.1 DENSITY

The density of a pellet may be determined by measuring its dimensions with a micrometer and its weight with an analytical balance, and calculating its weight-to-volume ratio. If it is impervious to water, the chemist's method of weighing in air and in water can be used. Both of these methods are somewhat slow for repetitive operations, such as those of quality assurance. For impermeable charges, one of the most convenient means of checking density is the preparation of two solutions of a dense salt, one of density equal to the upper limit and the other at the lower limiting density. If a pellet floats in the former and sinks in the latter, its density is within the specified tolerance.

The density of a cased charge may be determined by weighing the case empty, filled with water, and after loading. The density in g/cm^3 is then the ratio of the net explosive weight to the net water weight. This method becomes impractical for small cased charges like those of leads and detonators. Here, the density may be determined from the weight as determined by weighing the case before and after loading, and from the volume as calculated from the dimensions.

A scheme for continuous quality assurance is that of pressing at some constant pressure or dead load and measuring the intrusion of the ram in each item. Variations in cavity dimensions, charge weight, or pressure-density relationship can be detected by this method. Of course, the method is incapable of distinguishing among these variations, and errors of one kind can compensate for errors of another. However, in a well-controlled process, the probability of each type of error is low enough that the probability of simultaneous occurrence, either compensating or not, is negligible. The type of data to be collected in each instance, to avoid erroneous conclusions, can usually be determined by study of the problem.

A relatively new nondestructive densitometer makes use of a radioactive source. A scanning system moves a detonator or other explosive device through a collimated gamma-ray beam while the intensity of radiation is being measured. Accuracies of ± 5% have been achieved[6].

10-6.2.2 CRACKS AND CAVITIES

In cast charges, the possible presence of cracks, cavities, and base separations cannot be ruled out. Such defects can be detected by means of X-ray or neutron radiation photographs. When such inspection is called for, as it should be in most cases, a defect classification chart should be prepared, including full scaled illustrations of minor, major, and critical defects. Such classification should be based on quantitative determinations of the effects of defects on safety and performance. X-rays should be made in at least two charge orientations.

10-6.2.3 COMPOSITION VARIATION

When homogeneity is critical, determinations of density and composition from point to point within a charge are made from samples obtained by sectioning the item[7]. This is a destructive test, at least for the explosive charge itself, and can be done only on a sampling basis. Variations in aluminum content of aluminized explosives may be detected in the X-rays that are made to detect cracks and cavities.

REFERENCES

a-k Lettered references are listed in the General References at the end of this handbook.

1. D. Kite, Jr., A. K. Behlert, and E. Jercerzewski, *Plastic Bonded Explosives for Use in Ammunition (U),* Technical Memorandum 2-2-62, Picatinny Arsenal, Dover, N.J., March 1962 (Confidential report).

2. M. J. Margolin and E. A. Skettini, *Ammunition Loading Techniques,* Report 43, Explosives Development Section, Picatinny Arsenal, Dover, N.J., December 1958.

3. G. D. Clift, *Centrifugal Casting of Explosive Charges for HEAT Shell,* Report TR 2381 Picatinny Arsenal, Dover, N.J., November 1956.

4. E. James, Jr., "Charge Preparation for Precise Detonation Velocity Studies", *Second ONR Symposium on Detonation,* Office of Naval Research, Navy Dept., February 9-11, 1955, pp. 1-17.

5. Shepherd Levmore, *Principal Characteristics of the Gelled Slurry Explosive DBA-22M,* Report TR 4237, Picatinny Arsenal, Dover, N.J., July 1971.

6. AMCP 706-248, Engineering Design Handbook, *Ammunition Series, Section 5, Inspection. Aspects of Artillery Ammunition Design.* (OBSOLETE)

7. *Explosion Effects Data Sheets,* NAVORD Report 2986, Naval Ordnance Laboratory, Silver Spring, Md., June 1955.

8. C. C. Misener, *Capabilities of Explosive Loading Group of the Chemical Engineering Division (W.E.),* NAVORD Report 6873, Naval Ordnance Laboratory, Silver Spring, Md., 27 April 1960.

9. M. C. St. Cyr, *Compatibility of Explosives with Polymers* Report TR 2595, Picatinny Arsenal, Dover, N.J., March 1959.

10. M. J. Bodnar, *Bonding of Explosives to Metal with Adhesive,* Report TR 2412, Picatinny Arsenal, Dover, N.J., June 1957.

11. M. J. Bodnar, E. R. Kelly, and W. J. Powers, *Adhesive Bonding of High Explosives to Metals,* Report TR 2538, Picatinny Arsenal, Dover, N.J., August 1958.

12. E. A. Christian and H. G. Snay, *Analysis*

of *Experimental Data on Detonation Velocities,* NAVORD Report 1508, Naval Ordnance Laboratory, Silver Spring, Md., February 1951.

13. G. V. Horvat and E. J. Murray, *Propagation* of *Detonation in Long Narrow Cylinders of Explosives at Ambient Temperature and at –65°F.,* Report TR 2389, Picatinny Arsenal, Dover, N.J., January 1957.

14. S. J. Lowell, M. E. Pollack, R. T. Schimmel, *Evaluation of Minol-2 as a Bomb Filler,* Report TR 3830, Picatinny Arsenal, Dover, N.J., December 1968.

15. MIL-STD-414, *Sampling Procedures and Tables for Inspection by Variables for Percent Defective,* Dept. of Defense.

16. W. E. Voreck and J. W. McCahill, *Scanning Gamma Ray Densitometer System for Detonators,* Report TR 4239, Picatinny Arsenal, Dover, N.J., September 1971.

17. L. Jablansky and S. D. Stein, *Specific Gravity Study and Composition Analysis* of *Composition B-Loaded 77mm T50E2 Shell,* Report TR 2338, Picatinny Arsenal, Dover, N.J., February 1957.

CHAPTER 11

PACKING, STORING, AND SHIPPING

11-1 PACKING

11-1.1 GENERAL

Military materiel is packaged to insure that items are in a condition to perform their intended functions when the time comes for their use. Packaging must protect an item from the time of production, through transport and storage, until delivery to its ultimate user. During transportation, which includes both handling and carriage, the Department of Tranportation (DoT) regulations must be strictly observed for movement within the U.S. Items may be stored for indefinite periods of time'in both protected and unprotected storage. During this period, the package must protect the item against physical damage and environmentally induced deterioration. In some instances, provisions must be incorporated for inspecting and performing maintenance on stored materiel.

The most damaging environments during transportation by truck, rail, ship, or aircraft are shock and vibration. The package must protect the materiel against these forces. Package design is in the purview of the packaging engineer.

It is the aim of military packaging to achieve a high degree of protection in a uniform, efficient, and economic manner. In general, this requires that similar items be preserved, packaged, and marked in a similar way; and that the number and type of packaging requirements and packaging materials used be kept to the minimum consistent with the desired protection. The resulting uniformity facilitates efficient procurement, receipt, storage, inventory, shipment, and issue of supplies and equipment.

Before materiel is packaged, it must first be cleaned, dried, and preserved. It is then ready for the unit pack which may 'be wrapping paper or a cardboard carton depending on the size and complexity of the item. Additional packaging consists of wooden boxes, crates, metal drums, and waterproof wrapping– depending again on the item and on fhe protection level required. Each package must be properly marked or labeled. Three military protection levels have been established:

1. Level A. Preservation and packaging that will afford adequate protection against corrosion, deterioration, and damage during world-wide shipping, handling, and open storage.

2. Level **B.** Preservation and packaging that will provide adequate protection against known conditions that are less hazardous than Level A is designed to meet but provides a higher degree of protection than Level C. The design of Level B is based on firmly established knowledge of the shipping, handling, and storage conditions to be encountered and on the determination that the costs of preparation are less than Level A.

3. Level *C*. Preservation and packaging that will afford adequate protection against corrosion, deterioration, and damage during shipping from the source of supply to the first receiving activity for immediate use or for storage under controlled humidity.

The topics of package design, limits imposed by the distribution system, transportation environments, cleaning, preservation, container, cushioning and barrier materials, and fasteners are treated in detail in Ref. 1.

11-1.2 PACKING OF EXPLOSIVE TRAIN COMPONENTS

11-1.2.1 HAZARD CLASSIFICATION

Hazardous materials are arranged into eight levels according to their storage hazard (see par. 11-2.1), and explosives are divided into three levels according to their shipping hazard (see par. 11-3.1). The proper hazard classification of each item must be known before it can be packed because affixing the correct shipping label is a part of the packaging process. It must be known before a package can be designed because the package affects the hazard level. If the package is capable of containing a portion of the explosive output in the event of inadvertent detonation, the hazard class may well be lower than without such protection.

Item hazard classes are contained in packing drawings and specifications. If the hazard level of a particular explosive component has not been established, it must be obtained by means of standard test devised for this purpose[2].

11-1.2.2 PACKING CONSIDERATIONS

Explosive components like other military materiel also must be suitably packaged at minimum cost. These components, as well as the munitions of which they are a part, are subject to another important requirement: they must be safe during packing, storing, and shipping.

Explosive devices can be shipped and stored safely if they are handled correctly and carefully, and with all of the necessary precautions. The excellent safety record of both the military and the explosives industry is a result of careful preparation, not chance. Explosives are set off by energy concentrations such as sparks, friction, impact, hot objects, flame, chemical reactions, and excessive pressure. Established safety practices will avoid these conditions in order to minimize hazards.

The basic reference for safety is the *Safety Manual*[3]. It contains detailed discussions of the established safety practices for packing as well as shipping and storing. The safety regulations have been slightly abbreviated and rearranged in two volumes for Department of Defense agencies[4] and their contractors[5] for convenient reference.

The wide range in the sensitivity stability, and hyroscopicity of explosive components has required the development of appropriately varied types of packing. At times, the packing must be very complex and costly. On the other hand, the relative insensitivity of some devices permits the use of reusable cardboard cartons for interplant shipment of short-term storage.

Packing drawings and specifications have been prepared for essentially all military items containing hazardous materials. The drawings and specifications cover all applicable details of wrapping, boxing, bracing, palleting, and handling. If such drawings and specifications are not available for a particular item, Department of Transportation regulations apply and they specify minimum requirements. Packing for different levels of protection are discussed in par. 11-1.1. Like all military materiel, packages containing explosive components must be marked as to contents (item, quantity, lot, date). In addition, containers of hazardous materials must be conspicuously marked and labeled to indicate the hazard.

11-1.2.3 PACKING OF SMALL EXPLOSIVE COMPONENTS

Many explosive components are cylinders of relatively small size and light weight. Included in this group are such items as primers, squibs, detonators, and delays. They contain a sufficiently small amount of explosive that packages have been designed to contain their explosive output. This means that if a component were to be initiated while in its package, little damage would result apart from the destruction of a part of the package. Since the items are small,' it is

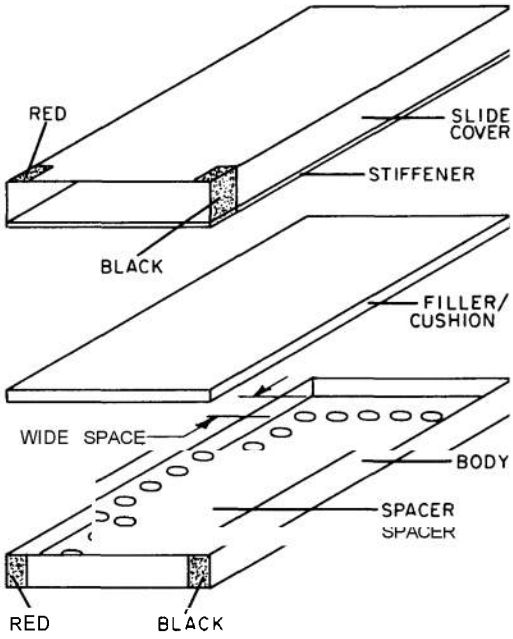

Figure 11-1. Packing Box for Small Explosive Components

desirable to pack many units in one box. To contain the output within the package, it is important that the detonation of one component not be propagated to any other device in the same package.

Fig. 11-1 shows the packing box in current use for most Army detonators. The box, of Kraft paper board, contains fifty items and varies in size depending on the size of the detonators. Components are held in a spacer in ten rows of five units each, the spacer being from 1/8 to 3/4 in. thick to match the length of the detonator. After the detonators are placed in the spacer holes, they are covered by a filler/cushion, about 3/16 in. thick. The assembly is completed by sliding the cover over the body. The cover has a 3/16-in. thick stiffener fastened to its bottom. Thus each detonator is surrounded by a substantial thickness of Kraft board on all sides.

The packing box itself serves for interplant and other Level C shipment. For higher level shipments, up to twenty boxes are placed into a cardboard box, the number depending on the size of the detonators. Ten cardboard boxes are packed into a wooden box. Additional safety is obtained by alternating the packing box direction in each layer, one layer with the red-black marking in front, the next with the red-black marking in the rear. This arrangement assures that two adjacent detonators are not directly in line. This feature is achieved by the way the holes are arranged in the spacer. The first row is near the red-black end but there is a wider space at the other end. Detonators packaged in this manner are accepted for shipping Class C.

11-1.3 PACKING OF RELATED MATERIAL

11-1.3.1 BULK EXPLOSIVES

The sensitivity of bulk explosive material varies even more widely than that of explosive components. Some initiating explosives are so sensitive to initiation that they can only be shipped in quantity in a wet condition. On the other extreme are insensitive main bursting charges that are poured into 50-lb kegs. For details of packing explosive materials, see Ref. b.

11-1.3.2 ASSEMBLED AMMUNITION

Explosive components are often assembled into fuzes and sometimes into other ammunition assemblies. The assembly then defines the hazard class and the method of packing. It is not possible here to specify the packing for all the assemblies containing explosive components. This information is tabulated in the AMC *Safety Manual*[3], which lists fuze and ammunition hazard classes, and in the Navy *Safety Handbook*[6], which lists transportation data for all fuzes and munitions by Federal Stock Number.

11-2 STORING

11-2.1 HAZARD CLASSIFICATION

For the purpose of storage, hazardous materials are arranged into eight classes

TABLE 11-1

EXCERPT FROM QUANTITY-DISTANCE TABLES

(Distance in feet)

	Inhabited Building		Highway & or Railway		Intraline		Above Ground Magazine	
Explosive, lb	bar.	unbar.	bar.	unbar.	bar.	unbar.	bar.	unbar.
			Class 1					
No limit	100		100		100		80	
			Class 7					
1	40	80	25	50				
10	90	180	55	110	30	40		
100	190	380	115	230	40	80	28	51
1,000	400	800	240	480	95	190	60	110
10,000	865	1730	520	1040	200	400	130	235
100,000	1855	3630	1115	2180	415	830	280	510
500,000	4510	4510	3245	3245	715	1430	475	875

according to their level of hazard. Explosive components are divided into classes 1 and 7 depending on whether they merely burn or whether they can detonate. Class 1 items are those that have a high fire hazard but no blast hazard and for which virtually no fragmentation or toxic hazard exists beyond the fire hazard clearance distance ordinarily specified for high-risk materials. In contrast, class 7 items are those for which most items of a lot will explode virtually instantaneously when a small portion is subjected to fire, severe concussion, impact, the impulse of an initiating agent, or considerable discharge of energy from an external source[5].

11-2.2 STORAGE CONSIDERATIONS

Hazardous materials are stored in accordance with quantity-distance requirements. These requirements are defined as "the quantity of explosives material and distance separation relationships which provide defined types of protection. These relationships are based on levels of risk considered acceptable for the stipulated exposures and are tabulated in the appropriate quantitydistance tables. Separation distances are not absolute safe distances but are relative protective or safe distances"[4].

Quantitydistance tables are contained in the safety manuals[3-5]; a typical excerpt is shown in Table 11-1[3]. The largest minimum distances are required where a hazard exists to personnel, i.e., inhabited buildings. Intra-line refers to the minimum distance between any two buildings within one operating line or assembly operation. The magazine distances given in the excerpt are for above-ground storage, which is the least desirable. Earth-covered, arch type magazines are preferred because they are safer; their required separation distances are much less than those of above-ground magazines. Note that separation distance is roughly proportional to the quantity of explosive, and that a barricade of proper construction cuts in half the distance used for unbarricaded storage.

To determine distances between different types of magazines Ref. 4 is the easiest to use.

It contains a group of diagrams, like Fig. 11-2, which states that the minimum distance from a barricaded above-ground magazine to the door and of an earth-covered, arch. type magazine is found in Table 5-6.3, column 5 in the reference:

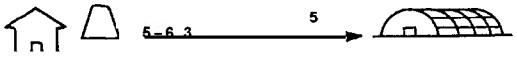

Figure 11-2. Illustration of Data in Ref. 4

In addition to quantity-distance, compatibility must also be considered in storage. Only compatible hazardous items may be stored together in one magazine. Compatibility is established by consideration of the following factors[3] :

1. Effects of explosion of the item
2. Rate of deterioration
3. Sensitivity of initiation
4. Type of packing
5. Effects of fire involving the item
6. Quantity of explosive per unit.

Storage regulations for specific explosive components are contained in the item specification. For detailed storage information, see Ref. 3.

11-3 SHIPPING

11-3.1 HAZARD CLASSIFICATION

For the purpose of shipping, explosives are divided into three classes according to their level of hazard[6] :

1. Class A. Chemical compounds, mixtures, or devices (mass detonating, spark initiated, or shock sensitive) with maximum shipping hazard. Examples are black powder, PETN, and explosive ammunition.

2. Class B. Explosives that function by rapid combustion rather than detonation. Examples are gun propellants and certain rocket motors.

3. Class C. Devices that may contain Class A or Class B explosives or both, but in restricted quantities, and certain types of fireworks. Examples are electric squibs, explosive bolts, and small arms ammunition.

11-3.2 SHIPPING CONSIDERATIONS

The safe transport of hazardous materials is the responsibility of the shipper. It has become expedient to pack and label hazardous cargo to meet requirements for all kinds of transportation. The Navy is the largest shipper of military cargo because most of it ultimately ends up aboard ship. If a commercial shipper is used, he should be properly licensed in all states and countries involved. Shipping regulations are complex, and a qualified shipper is needed to cope with them.

All safety regulations are enforced in the shipment of hazardous materials to protect life, property, and the cargo itself. All cargo must be properly blocked and braced during shipment. For some hazard classes, the vehicle must be placarded and inspected. Mixed shipments in the same vehicle must be compatible. In case of an accident on any mode of shipping, Form F5800 must be filed with the Department of Transportation when the incident involves death or serious injury, $50,000 property damage, or continuing danger.

Shipping regulations for specific explosive components are contained in the item specification. General regulations are covered by the Department of Transportation, Code of Federal Regulations, Title 49, Parts 170-9. For detailed information of shipping explosives, see Ref. b and on shipping ammunition

containing explosive components, see Ref. 6. In addition to these regulations, state and municipal laws, local ordinances, and harbor regulations must be observed where they apply.

11-3.3 CONSIDERATIONS FOR SPECIFIC MODES OF SHIPPING

11-3.3.1 RAIL TRANSPORT

Railroad shipment of hazardous materials is covered in Department of Transportation Tariff No. 23[7].

11-3.3.2 TRUCK TRANSPORT

Motor vehicle shipment of hazardous materials is covered in Department of Transportation Tariff No. 11[8]. Motor vehicle shipment is more complex than rail shipment. A train is made up of many cars watched over by the engineer in front and caboose personnel behind. The engineer is in voice communication with the tower. The railroad controls traffic flow over its route. It provides trained inspectors. In contrast, each truck solos. It has no control over traffic on the public highway and the driver must cope with any situation that may arise.

For these reasons, drivers of hazardous materials are given careful training and detailed instructions (e.g., Ref. 9), and the vehicle is carefully inspected for safety (e.g., lights and brakes) and compliance with local laws (e.g., weight limit).

11-3.3.3 SHIP TRANSPORT

All water shipment is regulated by the Coast Guard[10]. There are many restrictions to the transport of hazardous materials by ship that must be taken into account. Some dangerous articles are not permitted on passenger carrying vessels. Also, many ports do not permit the anchorage of vessels carrying dangerous articles. The Army Corps of Engineers therefore has established suitably isolated explosives anchorages at various ports.

11-3.3.4 AIR TRANSPORT

Aircraft shipment of hazardous materials is covered by Department of Transportation Tariff No. 6-D'[1]. As in ship transportation, dangerous cargo is prohibited on passenger carrying craft. For considerations when materiel is to be airdropped, see Ref. 12.

REFERENCES

1. AMCP 706-121, Engineering Design Handbook, *Packaging and Pack Engineering.*

2. TB 700-2, *Explosives Hazard Classification Procedures,* Dept. of Army, 19 May 1967.

3. AMCR 385-100, *Safety Manual,* Army Materiel Command, April 1970.

4. DOD 4145.27M *DOD Ammunition and Explosives Safety Standard,* Dept. of Defense, March 1969.

5. DOD 4145.26M, DOD *Contractors' Safety Manual for Ammunition, Explosives and Related Dangerous Material,* Dept. of Defense, October 1968.

6. OP 2165, *Navy Transportation Safety Handbook,* Naval Ordnance Systems Command.

7. Tariff No. 23, *Regulations for Transportation of Explosives and Other Dangerous Articles by Land and Water in Rail Freight Service and by Motor Vehicle (Highway) and Water, Including Specifications for Shipping Containers,* published by Agent T. C. George, 2 Penn. Plaza, New York, N.Y. 10001.

8. Tariff No. 11, *Regulations for Transportation* of *Explosives and Other Dangerous Articles by Motor, Rails, and Water, Including Specifications for Shipping Containers,* published by Agent F. G. Freund, American Trucking Assoc., Inc., 1616 P St., N. W., Washington, D.C., 20036.

9. OP 2239, *Drivers Handbook–Ammunition, Explosives, and Other Dangerous Articles,* Naval Ordnance Systems Command.

10. CG 108, *Rules and Regulations for Military Explosives and Hazardous Munitions,* U.S. Coast Guard.

11. Tariff No. 6-D, *Official Air Transport Restricted Articles Tariff,* published by C. C. Squire, Airline Tariff Publishers, Inc. Agent, 1825 K St., N. W., Washington, D.C. 20006.

12. AMCP706-130, Engineering Design Handbook, *Design for Air Transport and Airdrop* of *Materiel.*

CHAPTER 12

EVALUATION PROCEDURES

12-1 CONSIDERATIONS IN EVALUATIONS

12-1.1 SAFETY AND RELIABILITY PROCEDURES

12-1.1.1 STATISTICAL INFERENCES

If each type of materiel could be perfectly made, its properties could be accurately described by measuring one of each type. Since this ideal can never be realized in practice, one can measure the properties of either every item or a sample that is truly representative of that type. The simplest, most direct, and least questionable way to demonstrate the safety or reliability of an explosive charge is to test enough items under actual service conditions. This will enable one to determine the reliability or safety of the charge under actual conditions.

Absolute assurance can never be given unless all of the units are tested. A quantitative measure, however, can be obtained in terms of a probability that can be qualified with a confidence level. As an example, with a low failure rate, the number of trials without a failure to establish (with 95% confidence) any specified reliability or safety level is

$$n = 2.3/\gamma \qquad (12\text{-}1)$$

where

n = number of trials

γ = failure rate

Thus, to establish 99.9% reliability at 95% confidence, it is necessary to test 2300 items without a failure, and to establish a safety of one explosion or less in a million exposures, 2,300,000 trials would be needed.

The designer's task, however, is to provide sound estimates of what can be expected in terms of safety and reliability with relatively few samples. To do so he must be able to recognize the significant parameters and treat the measurements on a sound statistical basis. Hence, the discussion that follows should be considered as a general guide. It should not be followed slavishly at the expense of sound engineering practice. It is strongly recommended that the reader supplement his background by studying the referenced texts[1-6]. A review of the normal, binomial, and Poisson distributions would be particularly helpful. It is important to realize, on the other hand, that correct design of experiment and performance of statistically significant tests is a specialty that calls for the services of a qualified expert.

When computing safety and reliability by statistical extrapolations of sensitivity data, the following points will serve as a general guide:

1. All safety and reliability determinations are estimates. As such, they should be accompanied by assessments of their accuracy and confidence levels.

2. Safety and reliability determinations apply specifically to the conditions for which they were determined. It is part of the function of a designer to determine, as completely as possible, the range of conditions which may be expected to prevail in service and to assure himself of safety and reliability over the whole range.

3. The surest way to establish safety and reliability is to test a large enough quantity under the exact conditions of use. The quantities necessary for such tests are, however, prohibitive, particularly in the design and development phase.

4. *All fire* points are not what their name implies. The only way to be sure that all charges of a kind will fire under any given set of conditions is to fire them all under these conditions. When this is done, none will be left to use in ammunition. If *all fire* data are accompanied by a 50% point or a *no fire* point, and the numbers of trials involved in *all fire* and *no fire* determination are specified, they may be used with a statistical lever technique to compute safety and reliability levels.

5. All extrapolations are based on assumptions, depending on the nature of the underlying distribution. Hence, predicted values should be accompanied by a clear statement of the assumptions made and, whenever possible, a justification for their use.

6. The sensitivity of a charge is determined by its design and that of its surroundings, as well as by the explosive materials of which it is composed. Thus, safety and reliability must be re-evaluated when the design of either explosive charges or inert parts is altered. Seemingly small changes are sometimes important.

7. Both safety and reliability are related to the ratio of the difference between the expected service condition and the mean sensitivity to the standard deviation of the sensitivity. Either may be improved by increasing this difference or by reducing the standard deviation.

8. Although, as shown in par. 2-3.1, the initiation process often depends upon the nonhomogeneity of explosives, so that sensitivity is perhaps more inherently statistical in nature than most quantitative properties, it has been found that the variability of the sensitivity of most explosive charges is due mainly to variations in such quantities as dimensions, density, and confinement. Thus, the standard deviation of the sensitivity can usually be substantially reduced by improved control of these quantities.

12-1.1.2 FREQUENCY DISTRIBUTIONS

Observations will usually take the form of variables or attributes. Data consisting of measured characteristics are said to be expressed by variables. Attributes are specific qualities possessed by the item, such as color, cracked, fired, or not fired. Hence, in general, the item examined either conforms or does not conform to some quality, standard, or specification. Attributes in the form of *go* and *no-go* data, such as fired and not-fired, are often referred to as quantal response data; the event either occurs or does not occur upon the application of a stimulus. It is often advantageous to express the latter as a percentage of occurrence for a given stimulus. In effect, this is a means of transforming quantal data to a variable form.

One of the methods that can be used to present the results of a series of observations is a graphical plot of the frequency of each occurrence with respect to the independent variable. This plot is a visual display of the pattern of variation for the observations. With a graphical technique it is usually more convenient to plot the cumulative frequency as a function of the independent variable. An example of cumulative frequency distribution, the probability of functioning of an electric initiator, is shown in Fig. 12-1(A). So many types of experimental data fit a pattern of this type (also known as a *normal* distribution) that a special graph paper (probability paper) is made on which this function will plot as a straight line (Fig. 12-1(B)). When a distribution of observations fits such a pattern, it can be described by its mean (the average or 50% value) and a standard deviation (the root mean square of the deviation from the mean).

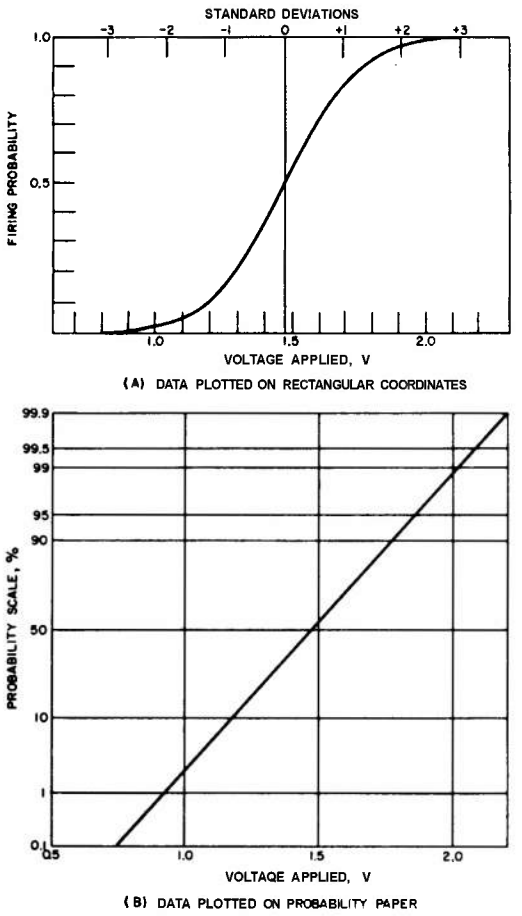

Figure 12-1. Cumulative Frequency Distribution for a Normally Distributed Population

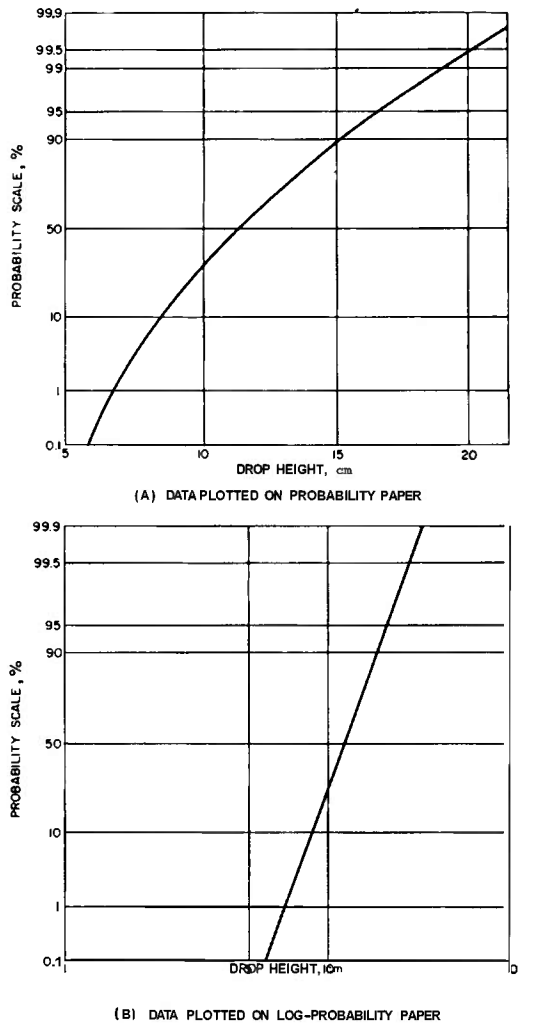

Figure 12-2. Skewed Frequency Distribution Typical of Impact Sensitivity Data

There are cases when the data will yield a curve on probability paper as shown in Fig. 12-2(A). It is wise in cases of this type to find a suitable mathematical transform for the independent variable which will give a straight line to take advantage of the properties of the normal distribution which are well defined. The transform (or normalizing function) that has been successfully applied to input sensitivity is the logarithm of firing stimulus, Fig. 12-2(B). The probability that mechanical detonators will fire has been found to be nearly normally distributed with respect to the logarithm of drop height that is related to the energy required for functioning. The analogy applies as well to initiation by another explosive charge, the probability of which is related to the logarithm of gap length. The logarithmic relationship has also been found to be useful for wirebridge electric initiators with respect to such energy parameters as current or voltage.

The assumption that statistical quantities are normally distributed, or may be made that way by the choice of a normalizing function of the physical variable, has formed the basis for most statistical methods and treatments. Most quantitative statements of the variability of experimentally determined quantities are in these terms. For this reason, we discuss the variables in terms of this assumption even though recent experiments have cast some doubt on its applicability to safety and reliability problems.

Probability paper may be used to extrapolate from experimental data to predictions of safety and reliability. Consider, for example, that 23 of 25 electric detonators of a given design fire when subjected to the discharge of a 1-μF capacitor charged to 50 V and only one in 25 fires when the potential is reduced to 25 V. Suppose that the firing circuit to be used in service uses a 1-μF capacitor that will be charged to at least 65 V. Assuming that the firing probability of the initiator is normally distributed with respect to the logarithm of the firing voltage, the noted frequencies (92 and 4%) are plotted on log-probability paper versus the voltages at which they occurred (50 and 25 V). A straight line plotted through these points gives the most probable relationship between firing voltage and reliability. When extrapolating this line to 65 V, the most probable reliability is found to be 99.45%.

12-1.1.3 CONFIDENCE LEVELS

Although the most probable reliability, as indicated by constructions such as in Fig. 12-2, is a valid estimate of the performance that may be anticipated, the true reliability has as much chance of being lower as it has of being higher. For purposes of system evaluation or operations analysis, it is necessary to quote reliabilities with confidence levels. Confidence levels are quantitative statements of the reliance that may be placed upon the statement of a statistical quantity. In the foregoing example, it is certainly true that the 23 out of 25 that fired at 50 V is exactly 92% of that group of 25. It is also obvious that, if this group were drawn from a lot of 1000, the fact that 92% of the sample fired does not establish 92% as the reliability of the whole lot at this level. There is a possibility that by a remote coincidence of selection, either the only 23 in the lot which would have fired or the only two that would have failed were those used in the test. Thus, the only statement that can be made with absolute certainty (100% confidence level) is that somewhere between 2.3 and 99.8% of the lot fired at this level. To assess the effect of reliability of the initiator upon that of the system, the reliability must be quoted as a confidence level somewhere between the 50% level (which states that 92%, more or less) will fire and the 100% level, which gives limits so broad as to be useless. Statisticians generally settle for 95% confidence level (19/1 odds that the statement is correct).

12-1.1.4 RELIABILITY DETERMINATION FROM MEAN AND DEVIATION

The standard statistical techniques used in the conduct and analysis of many sensitivity tests yield data expressed in terms of a mean and standard deviation. The mean is the point at' which 50% explosions are observed or anticipated. The deviation(s) of the sensitivity of an individual charge is the difference between the magnitude of the initiating impulse that is just sufficient to initiate it and the mean for the population from which it is drawn. The standard deviation of the population is the root of the mean square of the deviations of the whole population.

Where the correct normalizing function and the true standard deviation of the sensitivity of a charge, as well as the magnitude of the initiating impulse to be expected in use, are known, safety or reliability calculations are quite simple. A graphical method, as shown in Figs. 12-1 and 12-2, can be used but is not usually needed. It is only necessary to divide the difference between mean and anticipated operating condition to obtain the deviation is standard deviation units and interpolate on a

TABLE 12-1

SAFETY AND RELIABILITY RELATED TO DEVIATIONS FROM THE MEAN

No. of Std. Deviations From Mean	Probability of Occurrence,% For Positive* Deviation	For Negative* Deviation
0.253	60	40
0.524	70	30
0.842	80	20
1.000	84.13	15.87
1.282	90.0	10.0
1.500	93.32	6.68
1.645	95.0	5.0
2.000	97.73	2.27
2.054	98.0	2.0
2.327	99.0	1.0
2.500	99.38	0.62
2.575	99.5	0.5
2.875	99.8	0.2
3.000	99.87	0.13
3.09	99.9	0.1
3.29	99.95	0.05
3.50	99.98	0.02
3.73	99.99	0.01
4.00	99.997	0.00317
5.00		2.87×10^{-5}
6.00		1.0×10^{-7}
7.00		1.3×10^{-10}
8.00		6.4×10^{-14}
9.00		1.2×10^{-17}
10.00		8.0×10^{-22}

*Positive and negative are meant to imply deviations toward and away from more probable occurrence.

table (see Table 12-1[6]) to find the reliability. For example, if it is known that the mean sensitivity of a stab initiator is 4 in. when dropping a 2-oz ball (in this example, 8 in.-oz) with a standard deviation of 1 in. (2 in.-oz) and if the expected firing impulse is at least 7 in. (14 in.-oz) the deviation of the expected firing impulse from the mean sensitivity is 6 in.-oz. This is three standard deviations above the mean and the predicted reliability is 99.87%.

It is well to note that the statement of this example starts with the qualifying phrase *if it is known.* Many reported sensitivity data are obtained by the use of experimental and analytical techniques whose validity rests upon that of a series of assumptions which may or may not apply to the situation under consideration. In some cases, careful investigations have been made to validate these assumptions. Usually not. The fact that the standard deviation is quoted in inch-ounces implies that the probability of firing is normally distributed with respect to the energy of impact. Suppose that the true distribution is normal with respect to the logarithm of the energy. The log of the mean sensitivity is 0.903 with a standard deviation of about 0.1 log units, while the log of the expected firing energy is 1.146, or 0.243 log units above the mean. The expected firing condition, assuming the log-normal distribution, is 2.43 standard deviations above the mean. Interpolating on Table 12-1, the predicted reliability is only 99.23%. This one change in assumptions changes the expected failure rate significantly. Further, it is not correct to assume that a 14 in.-oz energy obtained by dropping a 7-oz ball 2 in. is equivalent to the example.

The determination of the statistical distribution function of the sensitivity of a given type of charge to a given type of initiating impulse obviously requires the test firing of large numbers of charges, each under closely controlled conditions. For some relatively inexpensive and easily tested items, such programs have been carried out.

In view of the high costs of many items and the relatively low rate at which they can be tested, it is too much to hope that all aspects of the sensitivity of all types of charge will ever by characterized in this respect. Where the designer is faced with the necessity of

predicting safety or reliability of an item for which the distribution function is not known, the most prudent approach is to assume the function that gives the most pessimistic prediction (in the case of the last mentioned example, the log-normal distribution).

12-1.1.5 OPTIMIZATION

Optimization theory encompasses the quantitative study of optima and methods for finding them. Although many phases of optimization theory have been known to mathematicians since ancient times, the tedious and voluminous computations required prevented their practical application. The recent development of high-speed computers not only has made older methods attractive but also resulted in new advances in optimization methods. Since optimization involves finding the best way to do things, it has obvious applications in military design where sometimes small changes in efficiency spell the difference between success and failure.

The application of optimization theory involves three distinct steps' :

1. Complete, accurate, and quantitative understanding of how the system variables interact. This step is most important because there is obviously little point in optimizing a model that does not truly represent the system.

2. Selection of the single measure of system effectiveness that can be expressed in terms of system variables. This step involves value judgment and can be most difficult to accomplish. A goal of minimum total cost, for example, can be clearly defined to include the costs of production, packing, shipping, storage, maintenance, and delivery to the target. However, some goals can be conflicting and some, such as reliability, require a great deal of judgment to pinpoint their precise meaning in a particular application.

3. Selection of those values of the system variables that yield optimum effectiveness. In this step, optimization theory is applied to rational decision making.

A comprehension of optimization theory in idealized, quantitative situations not only will determine optima but also fumish insight into the underlying structure of rational decisions. This understanding helps in those instances where problems are not entirely mathematically describable. While optimization plays a definite role in the design of explosive trains, a description of the mathematics is beyond the scope of this handbook. See Ref. 7 for the basic mathematics or, for more information, a bibliography'.

12-1.2 STATISTICAL TEST METHODS

12-1.2.1 GENERAL CONSIDERATIONS

The sensitivity of an explosive charge is the magnitude of the minimum stimulus which will result in its initiation. Stimuli too weak to initiate charges can still alter them, sometimes quite obviously, at other times in ways that can only be detected in terms of changed sensitivity. Hence, subjecting each charge to gradually increasing stimuli until it fires is not a satisfactory means for determining sensitivity.

In recognition of this variability, a number of statistical plans have been devised for sensitivity studies. Some of these plans are designed to characterize the entire distribution, others to characterize it in terms of an assumed normal distribution, and still others to determine some point in the distribution which was felt to be of particular interest. Before these plans may be applied, sampling procedure and criteria of acceptance must be established.

It is a basic assumption regarding any test of a limited sample that the sample is representative of the population from which it is drawn. Unless some effort is made at randomization, this may not be the case. Many of the variables that affect sensitivity

may vary progressively or periodically as production, proceeds. Selection of a sample for test by any systematic means might conceivably produce a biased sample, one in which all items are more similar in some respect than is the whole batch or lot. A positive plan of randomization should be adopted, such as use of a table of random numbers.

While most explosive charges used by the military function with nearly maximum vigor, some vary appreciably in output as the vigor of initiation is varied. Even within groups of items for which output is usually independent of input, an occasional individual item, when initiated marginally, will explode with significantly less than its maximum vigor. For these reasons, it is necessary to prescribe in advance the criterion of fire. Both the quantity associated with output and its magnitude should be specified. A shift of criterion part way through a test reduces the data to uselessness. Sometimes such shifts are inadvertent. For example, when plate dent output is used as a criterion, the supply of plates may be exhausted before completion. The replenished supply may come from a different heat of metal with a different response in terms of the dent it sustains.

The criterion of fire generally will depend upon the purpose of the test. If it is a reliability test, the charge should be considered to have fired only if it detonated high order in the sense that its output cannot be distinguished from the maximum of which a charge of its type is capable (due allowance having been made for statistical fluctuations in this quantity). For safety tests, on the other hand, any evidence of burning, scorching, or melting of the explosive should be considered to be the criterion of fire.

12-1.2.2 STAIRCASE METHOD, THE BRUCETON TEST

A staircase testing technique is one in which a predetermined set of steps in the magnitude of, the initiating stimulus is established before starting and in which the magnitude used for each trial is determined by results of previous trials. A number of staircase techniques have been proposed. Of these, the simplest and most used is the Bruceton test[7]. In the Bruceton test, the magnitude of stimulus used in each trial is determined by the result obtained in the immediately preceding trial. If the preceding trial resulted in a misfire, the stimulus to be used in the present trial is one step higher than that in the previous trial. If it fired, the stimulus of the present trial should be of a magnitude one step lower. The test is continued in this manner for a predetermined number of trials. For maximum likelihood equations and FORTRAN program, see Ref. 10.

The validity of the results of this procedure depends on whether the assumption is valid that the steps are of uniform size in a system in which the frequency of explosions is normally distributed. The Bruceton test is most applicable to systems for which extensive tests have established the nature of a generic normalizing function. Unfortunately, it is often applied to systems for which it is not economically feasible to carry on such a program. The logarithm of the initiating stimulus has frequently been assumed as a normalizing function (giving a geometric progression of step sizes) on the logical basis that this distribution predicts zero probability of functioning at zero input and that a positive stimulus is required for any finite probability of firing. This choice has been supported by such observations as the relative constancy of standard deviations of similar systems over large ranges of sensitivity. In some cases, rundown tests have also supported this choice.

It should be noted that the analytical technique for Bruceton data was originally devised with much larger tests in mind (100 trials or more) than those which have been used in most safety and reliability investigations. It seems to have been grasped as a straw by evaluators drowning in the impossible problem of predicting reliabilities to the

99.9+% level from samples as small as twenty-five samples. It is probable that those who have so little appreciation of the impossibility as to assign such a problem will accept solutions that depend on so many untenable assumptions.

The Bruceton experimental technique is often used as a convenient means for the collection of data in situations where the assumption of normality is known to be false and where it is intended to use other methods of analysis. An objection which has been raised to this practice is that the strong tendency of the Bruceton technique to concentrate testing near the 50 percent point reduces the value of the data in estimating the nature and deviation of the distribution. In answer, it may be pointed out that the sample sizes available when this technique is used are usually so small that a reasonable estimate of the mean and a rough guess of the deviation is the most that can be expected.

12-1.2.3 FRANKFORD RUN-DOWN METHOD

A run-down method has been developed at Frankford Arsenal, which, at the expenditure of a much larger sample, makes possible a much better assessment of the distribution of the underlying population[1]. Beginning at any convenient level of the independent variable (drop height, voltage, barrier thickness or the like) between 0% and 100% of the expected functioning level, a minimum of 25 trials is made at each of several levels above and below the starting level, using increments equal to or less than the expected standard deviation. The test is continued in both directions in this manner until the 0% and 100% functioning levels are reached as indicated by 0% and 100% functioning in 25 consecutive trials. A cumulative probability plot is then drawn from the results of the test which is considered to be the frequency distribution of the parent population.

12-1.2.4 PROBIT, NORMIT, AND LOGIT PROCEDURES

These procedures are not data collecting schemes but rather analytical procedures for the estimation of distribution. They can use data collected by any of a number of schemes. They may be used with data collected by the Bruceton experimental technique using nonuniform steps or with incomplete or abbreviated versions of the rundown method[2].

Each of these procedures is based upon the transformation of the observed frequency of fire or misfire into a number related to the deviation in terms of an assumed distribution function. In the probit, for example, the mean is assigned a probit value of five, the 15.87% level (the mean minus one standard deviation) a value of four, the 84.13% point a value of six, and so forth[3].

The normit differs from the probit procedure only in that a value of zero is assigned to the mean. This necessitates the use of negative values but frequently simplifies both thinking and arithmetic.

The logit system is similar but assumes the logit distribution function[4]. In addition to fitting certain data better than the normal curve, this function has the advantages of being somewhat more conservative in its predictions and of being simple enough to apply without special tables.

12-2 TESTING TECHNIQUES

12-2.1 EXPLOSIVE MATERIALS

12-2.1.1 GENERAL

Explosive compounds or mixtures are evaluated for acceptance as standard materials on the basis of programs in which their explosive properties are determined. Many tests have been standardized to describe these explosive properties. In addition, special tests have been developed to take care of unusual conditions or to simulate a particular use.

This paragraph describes the purpose, nature, and key features of the tests on explosive materials. For a detailed discussion of the tests, the explosive charge designer should consult one of the handbooks on explosives[b,d,15,16]. The tests covered here are included partly for general information and partly because some of the tests have been applied to explosive charges. It is important to realize, however, that the performance of a loose explosive sample may differ greatly from that of the same explosive when pressed or cast into its end item.

Tests of explosive materials are conveniently placed into four groups. Descriptions of tests pertaining to sensitivity, output, and stability follow. Test sequence sometimes is specified[6]. The fourth group is made up of chemical tests designed primarily to verify composition and state of aggregation. As such, these tests are not included in this volume but can be found in handbooks on explosives[b,d,15]. Included in this group are such tests as flammability, hygroscopicity, volatility, molecular weight, and oxygen balance.

12-2.1.2 SENSITIVITY

The tests grouped under sensitivity measure how easily explosive materials are initiated. They simulate the various stimuli that are capable of setting off the explosive. The stimulus used most widely is that of impact sensitivity. In addition to the tests that follow, the sand bomb test, listed under brisance output, is also a measure of sensitivity to initiation.

12-2.1.2.1 IMPACT TEST

The impact test consists of dropping a weight on a sample of explosive. The two most prevalent impact tests are those by Picatinny Arsenal (PA) and by the Bureau of Mines (BM)[6,17]. The PA apparatus is shown in Fig. 12-3[b].

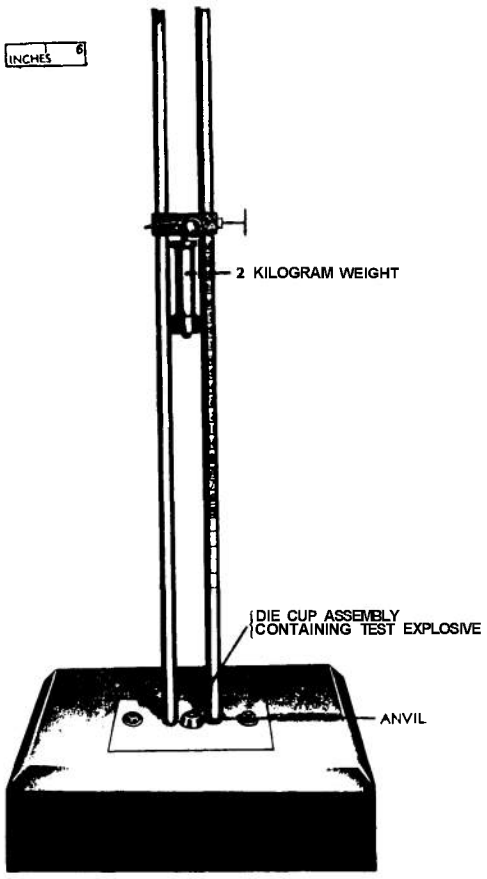

Figure 12-3. Picatinny Arsenal Impact Test Apparatus

In the test, a sample of explosive is subjected to the action of a falling weight, usually 2 kg. A 20-mg sample is always used in the BM apparatus while the PA sample weight is stated for each case. The minimum height at which at least one of 10 trials results in explosion is the impact test value. For the PA apparatus, the unit of height is the inch; for the BM apparatus, it is the centimeter.

In the PA apparatus, the sample is placed in the depression of a small steel die cup, capped by a thin brass cover in the center of which is placed a slot-vented cylindrical steel plug, slotted side down. In the BM apparatus, the explosive is held between two flat and parallel hardened steel surfaces. In the PA apparatus the impact is transmitted to the sample by the

vented plug, in the BM case by the upper flat plate. The main differences between the two tests are that the PA test (1) involves greater confinement, (2) distributes the translational impulse over a smaller area, and (3) involves a frictional component. Hence, PA test values are greatly affected by sample density.

Some additional impact tests differ primarily in the construction of the sample holder. The tests also have been modified to accommodate cast and liquid explosives[7]. A new tester has been developed for small stab detonators in which the firing pin is attached to the falling weight[8].

12-2.1.2.2 FRICTION PENDULUM TEST

To measure the sensitivity to friction, a 7 g sample, 50-100 mesh, is exposed to the action of a steel or fiber shoe swinging as a pendulum at the end of a long steel rod[k]. The behavior of the sample is described qualitatively to indicate its reaction to this experience, i.e., the most energetic reaction is explosion and—in decreasing order of severity—snaps, cracks, and unaffected.

Friction is difficult to measure quantitatively. Additional methods have been used, such as the disk test[5,19]. The rifle bullet impact test (see par. 12-2.1.2.3) is also a measure of sensitivity to frictional impact.

12-2.1.2.3 RIFLE BULLET IMPACT TEST

The traditional bullet sensitivity test consists of firing a cal .30 rifle into the side of a 3-in. pipe nipple, loaded with approximately 0.5 lb of the explosive being tested, and capped at both ends[k]. Because of the curved surface presented as a target, the angle of incidence, and consequently the test results, can be greatly affected by the condition of the weapon and characteristics of the ammunition. An improved test with a flat target plate was devised at Picatinny Arsenal[20]. Projectile impact could be substituted for the rifle bullet. Here the velocity of the projectile that is shot out of a small bore gun is varied in a Bruceton type test. Results therefore are quantitative as compared with the go/no-go nature of the rifle bullet.

12-2.1.2.4 EXPLOSION TEMPERATURE TEST

A 20-mg sample of secondary explosive or a 10-mg sample of primary explosive, loose loaded in a No. 8 blasting cap cup, is immersed in a Wood's metal bath. The temperature determined is that which produces explosion, ignition, or decomposition of the sample in 5 sec[17]. The DTA test gradually is replacing this test. See par. 12-2.1.2.11.

12-2.1.2.5 GAP TESTS

The sensitivity of explosives to initiation by a booster is characterized in terms of the thickness of a gap introduced into the test set-up, see Fig. 12-4. There are two gap tests both using standard components[6]:

1. Small Scale Gap Test. The gap consists of an 0.005-in. air space.

2. Large Scale Gap Test. Lucite sheets are used here to attenuate the shock wave. (At one time the gap was filled with wax rather than Lucite.)

12-2.1.2.6 SETBACK PRESSURE TEST

To simulate the conditions experienced by the filler of a projectile during acceleration in a gun, the apparatus shown in Fig. 12-5[21] was developed. By the action of the propellant, a pressure pulse is transmitted to an explosive specimen through the piston system that closely resembles setback. The criterion for each explosive tested is the maximum pressure at which the explosive cannot be initiated, when at an initial temperature of 125°F, in 25 or more trials.

12-2.1.2.7 IMPACT VULNERABILITY TEST

A 2-in. diameter by 0.75-in. thick steel plate is assembled at the bottom of an 8-in.

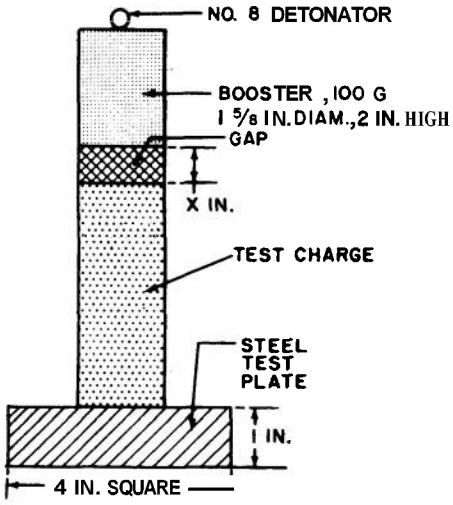

Figure 12-4. Gap Test Set-up

long sleeve that is filled with a propelling charge. When the charge is ignited, it drives the plate at a velocity of 400 ft/sec across an 1-in. air gap against a sample of explosive that rests on a witness plate. The test is passed when there is no damage to the witness plate. For obvious reasons this test is also called the flying plate test[16].

12-2.1.2.8 BOMB DROP TEST

Bomb drops are usually made with bombs assembled in the conventional manner, but containing either inert or simulated fuzes. The target is usually reinforced concrete[k].

12-2.1.2.9 COOK-OFF TEMPERATURE TESTS

Cook-off data generally are obtained by one of two methods: (1) the minimum cook-off temperature test or (2) the constant heating rate test. In the minimum cook-off temperature test, an explosive sample or component is submerged into a constant temperature environment, and time-to-explosion , versus environmental temperature is recorded and plotted. At some minimum critical temperature, the relationship becomes asymptotic. This asymptotic temperature is called the minimum cook-off temperature. It has significance because it sets the limits of safety.

In the constant heating rate test, the explosive sample or component is heated at a constant rate from a selected initial temperature. The cook-off temperature, in this case, is reported as that environmental temperature at which ignition occurs. Cook-off temperature as defined in this manner depends chiefly on the initial temperature level, and increases as the heating rate increases. While this method is widely used, it has obvious disadvantages. Cook-off temperatures obtained are somewhat higher than the minimum cook-off temperature. Constant heating rate test results are not easily correlated with actual conditions. Rate of heating, location of thermocouple, and simulation of heat transfer to other charges and weapon parts all affect the cook-off temperature so that results vary with different apparatus. The various means of determining cook-off temperatures are discussed in Ref. 22.

12-2.1.2.10 ELECTROSTATIC SENSITIVITY TEST

To determine the sensitivity to electrostatic discharge, a 15-mg sample of the explosive is placed into a phenolic holder positioned on an electrode. It is subjected to 8 voltage levels up to 7500 V discharged from capacitors of four different sizes. These data may be related to hazards by keeping in mind that the human body, on a dry winter day, may store as much as 0.05 J of static electrical energy[16,17].

12-2.1.2.11 DIFFERENTIAL THERMAL ANALYSIS

Differential Thermal Analysis (DTA) is a technique by which the reaction of a material to temperature can be followed by observing the heat absorbed or liberated. While this analytical method has been known for many years, it has been applied only recently when improved instrumentation has become available. DTA is especially suited to studies of

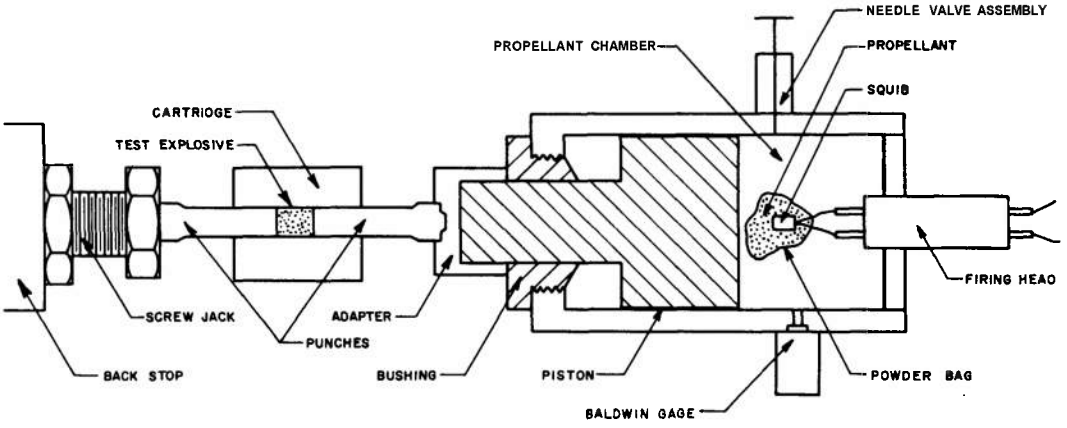

Figure 12-5. Apparatus Which Simulates Setback Pressure

structural changes within a solid at elevated temperatures where few other methods are available[23]. Heat effects, associated with chemical or physical changes, are measured as a function temperature as the material is heated or cooled at a uniform rate. As the sample temperature is varied, it will undergo a variety of changes, each being accompanied by the release or absorption of energy. Melting, sublimation, phase changes, dehydration, and boiling generally produce endothermic effects while crystallization, oxidation, and decomposition produce exothermic reactions.

In a typical apparatus, one set of thermocouple junctions is inserted into an inert material that does not change over the temperature range to be tested. The other set is placed in the sample. With constant heating, any transition or thermally induced reaction in the sample will be recorded as a change in an otherwise straight line. DTA records, called thermograms, have been collected for primary explosives[24] and high explosives[25].

Fig. 12-6 shows a thermogram of ammonium nitrate. Peaks A, B, and C are due to transitions in the crystal lattice. Peak A is the transition from Rhombic I to Rhombic II form; Peak B, from Rhombic II to Tetragonal; and Peak C, from Tetragonal to Cubic. Peak D represents the melting of the material at 175°C. The series of exotherms beginning near 250°C represents decomposition of the sample. Actually, the first strong exotherm is caused by decomposition of an organic contaminate in this sample. Samples of pure ammonium nitrate do not show this exotherm in DTA examinations.

12-2.1.2.12 THERMOGRAVIMETRIC ANALYSIS

Another approach to the study of phase transitions is provided by the instrument known as a thermobalance that permits continuous recording of the weight of a sample while it is being heated in a furnace at a constant, linear rate. The weight change vs temperature curve obtained provides information about the thermal stability and composition of the original sample, of intermediate compounds formed, and of the residue. Like DTA, thermogravimetric analysis (TGA) recently has been refined with modern instrumentation[23].

TGA is extensively used to determine changes in composition due to dehydration, decomposition, and reaction with the experimental atmosphere. It also has been employed for the determination of reaction kinetics. Records for high explosives are collected in Ref. 25.

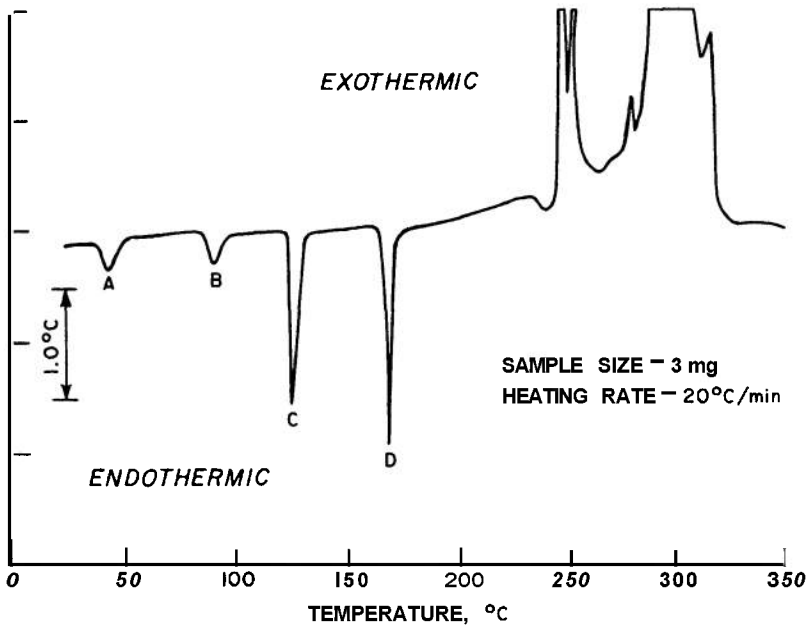

Figure 12-6. Thermogram of Ammonium Nitrate

12-2.1.2.13 HOT WIRE IGNITION TEST

The explosive charge is loaded into a squib against a tungsten bridgewire and placed explosive side down on an aluminum witness plate. Twelve volts are applied from an automotive battery of 45 A-hr capacity. The test is passed when the wire burns out but does not ignite the sample[16].

12-2.1.2.14 THERMAL DETONABILITY TEST

An explosive sample is loaded into a 2-in. black pipe nipple below a thermite charge. The test is passed when the burning thermite fails to detonate the sample[16]. This is also called the bonfire test.

12-2.1.3 OUTPUT

The tests grouped under output measure the effect that an explosive produces. As do the sensitivity tests, output tests measure a particular result that is judged to simulate performance.

12-2.1.3.1 DETONATION VELOCITY

Of the fundamental quantities associated with detonation, the propagation velocity is the most readily and directly measurable[k,16]. While it is not a complete characterization of the output properties of an explosive, it is a good criterion of performance in many applications. Since the detonation velocity varies with both density and charge dimensions, results must be accompanied by accurate data regarding these quantities. Detonation velocity may be measured by optical techniques, by electrical measurements, and by comparison with the known velocity of detonating cord.

The optical technique involves the use of a high speed camera. Streak cameras that have been used in detonation velocity measurements include rotating mirror cameras, rotating drum cameras, high-speed roll film cameras, and electronic image converter tube cameras[26]. Fig. 3-1 is a record obtained by a streak camera. A high speed framing camera has also been developed which will take full

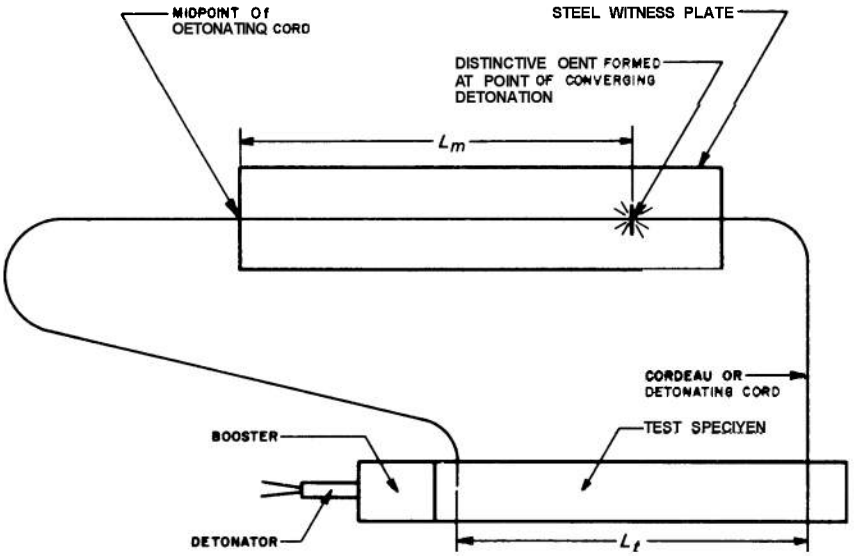

Figure 12-7. Method of d'Autriche for the Measurement of Detonation Velocity

image pictures at rates higher than four million frames per second.

The material within a detonation zone is highly ionized and, hence, an excellent electrical conductor. Thus a pair of electrical probes, placed in or close to an explosive charge, become electrically connected when a detonation, or the shock emitted by a detonation, engulfs them. Time intervals between such signals are measured with oscilloscopes and any of several types of interval timers[27]. Another technique developed by the Bureau of Mines involves a continuous electrical recording of the detonation progress by use of a resistance wire embedded parallel to the longitudinal axis of the explosive charge. As detonation proceeds, the resistance wire is shorted out, resulting in a dynamic resistance proportional to the rate of detonation.

The d'Autriche method (Fig. 12-7) depends upon the augmentation of radial output at the point where two waves in a cylindrical charge converge. The method is attractive in that it uses inexpensive instrumentation and has the reliability inherent in its extreme simplicity. The recent use of mild detonating fuse[28] has improved the precision of the results. Detonation velocity is computed by (see Fig. 12-7)

$$D_t = \frac{L_t}{t} = \frac{2L_t D_c}{L_m}, \text{ft/sec} \qquad (12\text{-}2)$$

where

D_t = detonation velocity of test specimen, ft/sec

D_c = detonation velocity of reference cord, ft/sec

L_t = active length of test specimen, ft

L_m = measured length from midpoint of cord to point of converging detonation, ft

t = time, sec

12-2.1.3.2 DETONATION PRESSURE

Detonation pressures are too high to measure directly with any ordinary pressure gages. The pressures of shocks induced by detonations in metals may be determined

from measurements of the movement of the metal and of shock velocity in the metal. From such data and the laws of shock interaction, it is possible to deduce detonation pressure[k,26,29]. Detonation pressure may also be determined from detonation velocity and the density within the detonation zone, which may be measured by means of flash X rays.

12-2.1.3.4 BRISANCE

The shattering power of an explosive, as distinguished from its total work capacity, is termed brisance. Brisance is measured in sand, plate dent, or fragmentation tests.

In the sand test, a 0.4-g sample of the explosive under test pressed at 3000 psi into a No. 6 cap, is initiated by lead azide in a sand test bomb containing 200 g of "on 30 mesh" Ottawa sand". The sand is resieved and is considered to have been crushed if it passes a No. 30 sieve. The significance of the sand test is difficult to state in physical terms. However, it does correlate, generally, with overall performance characteristics.

Plate dent tests, as used in brisance measurements are made with charges long enough compared with their diameters that the detonation head can reach a stable configuration. The standard specimen is 1-5/8 in. in diameter by 5 in. long. The depth of dent produced in the steel plate is compared with that produced by TNT. Plate dent brisance for bare charges correlate rather well with detonation pressure.

The fragmentation test is the most direct measure of the brisance of explosives. It consists of loading a projectile with the sample explosive, detonating the charge, and recovering the fragments. The projectile is placed in a wooden box that is buried in sand and fired electrically. Recovery of fragments and their classification into weight groups permit evaluation of the charge[5]. A new test titled the "expanding cylinder test" is presently used for characterizing the fragmenting ability of an explosive.

12-2.1.3.5 BLAST

Blast pressures and impulses are determined almost exclusively with piezoelectric gages and the necessary specialized electrical circuits. Results are obtained by an analysis of oscillograms[29].

12-2.1.3.6 BALLISTIC MORTAR

A number of tests compare the effectiveness of explosives as propellants[5]. In general, to preserve the mortars used, the charges are relatively quite small (for example, 10 g in a 10-in. bore mortar). The quantity of the explosive being tested which gives the same recoil as 10 g of TNT is used as the basis for expressing the relative output of the explosive. Although ballistic mortar test data tend to correlate with usable output for many explosives, there are enough inversions to inspire serious questioning of the meaning and validity of this type of data. Ballistic mortars have not been used extensively in recent years.

12-2.1.3.7 TRAUZL TEST

In a Trauzl block test, a sample of explosive (on the order of 10 g) is exploded in a cavity in a lead block. The increase in volume of the hole is the criterion of output[5]. It usually is related to TNT. The Trauzl test is a direct measure of the mechanical work performed by the explosive. It tends to correlate with the heat of explosion, although the small sample size is rather small for complete reaction of TNT. More sensitive materials, which react more completely, tend to have larger Trauzl block values than might be expected.

12-2.1.3.8 UNDERWATER SHOCK

Underwater explosive effects are more complicated than those in air. The energy released by detonation is partitioned into that

in the shockwave, that dissipated in the water during travel of the shockwave from the charge to the gage, and that remaining in the oscillating bubble formed by the detonation products. Shockwave energy is calculated from the deflection of a diaphragm gage placed 3.5 ft away and facing the side of the charge. Relative bubble energy is the ratio of the period constants cubed; period constants are determined by measuring the bubble period[29].

12-2.1.4 STABILITY

The vacuum stability test is the most widely used stability test for explosives. A 5-g sample (1 g in the case of primary high explosives), after having been thoroughly dried, is heated for 40 hr in vacuum at the desired temperature (100° or 120°C). Temperatures and the volume of gas evolved (in cm^3) are quoted[16,17,30].

Other tests are the heat tests in which samples are heated for 48 hr and the effects noted. Actually, stability of explosives under conditions of service is too complex to be characterized completely on the basis of standardized laboratory tests. Tests like that for cook-off, which are tailored to simulate conditions of use, are often necessary.

12-2.2 INPUT

12-2.2.1 MECHANICAL INITIATORS

Most mechanical sensitivity tests, whether for stab or percussion items, consist of dropping weights from various heights onto the appropriate firing pins. The most common means to this end is to release a weight from a magnet. The weights used in the testing of stab and percussion initiators are usually steel balls that are dropped free from the points of conical magnets. Impact machines include convenient means of adjusting the height of the magnet between drops and means for rapid and precise determination of the free fall distance (Fig. 12-3). In some machines, the height adjustment includes indexing stops for even intervals of height (usually fractions of an inch or centimeter). In others a dial, counter, or scale is provided for rapid reading of the drop height. The latter have the advantage, in Bruceton type testing, that the step intervals may be varied to suit the appropriate normalizing function.

The drop test is performed in a manner similar to that used for explosive materials (par. 12-2.1.2.1). A given weight (perhaps 2 oz) is dropped from various heights on the firing pin and the results noted. Height steps are varied by the Bruceton technique (par. 12-1.2.2).

12-2.2.2 ELECTRIC INITIATORS

Depending upon the application, the sensitivity of electric initiators is characterized in terms of the threshold current, voltage, power, energy, or some combination of these[31]. A specification in terms of only one of them may be misleading. However, in many applications, one or another of these quantities' is so much more significant than the others that it is appropriate to characterize the sensitivity of the initiator in its terms. The sensitivity response can be defined more rigorously in most cases by controlling the time as well as the magnitude of the applied stimulus.

12-2.2.2.1 CONDENSER DISCHARGE TEST

The sources used to fire electric initiators in many military applications emit pulses in which both current and voltage exceed, by many times, the threshold conditions for firing the initiator but for a very short duration. In many instances, the quantity that expresses limitation of output is the available energy. For this reason, it is a common practice to express the sensitivity of an electric initiator in terms of its energy requirement. The energy that is stored in a charged capacitor can be conveniently expressed by a simple equation that works only with the particular units given

$$w = 5CE^2, \text{ erg} \quad (12\text{-}3)$$

where

w = energy, erg

C = capacitance, μF

E = voltage, V

This total energy stored on a capacitor is frequently used to characterize the sensitivity of initiators. However, only in very specific instances would all of this energy be required to produce initiation. On the other hand, many initiators are fired from a charged capacitor in actual systems. In these instances, capacitor discharge data can be applied directly. It is *not* a valid procedure to use known sensitivity data at one voltage and capacitance and extrapolate to a different combination of voltage and capacitance on the basis of equal stored energy.

The energy sensitivities of most of the electric initiators now in military use were determined by using circuits similar to that shown in Fig. 12-8. Either voltage or capacitance may be varied to vary the energy. In many cases, convenience has been the basis for the choice. However, where a particular application is under consideration, the choice might be made on the basis of the limitations of the firing circuit in the fuze.

12-2.2.2.2 VOLTAGE SENSITIVITY

Where the firing circuit is a very low voltage source, the impedance of which is low compared with that of the initiator (as for example in some types of battery), the threshold voltage for firing may be the most important criterion of sensitivity. Test firing circuits for the determination of threshold firing voltage, similarly, should be very low impedance circuits. A type of variable source that has proven useful in this respect is a high capacity storage battery shunted by a relatively low resistance potentiometer. The resistance of the potentiometer should be low compared with that of the initiator but not so low as to overtax the battery. Aside from this, the circuit should provide for switching and connecting with a minimum of resistance. Contact potentials and inductive surges have been misleading in such circuits. As for capacitor discharge, a test set is also available for both constant voltage and constant current tests.

12-2.2.2.3 STEADY CURRENT FUNCTIONING

Where the firing source is of high impedance and limited current capacity, such as the high voltage supply of an electronic device, the firing current may ,be the most significant aspect of the sensitivity of an electric initiator. A test circuit for the determination of threshold firing current of an electric initiator should have an impedance that is high compared with the maximum resistance of the initiator at least up to the time of initiation. A high voltage supply with a dropping resistor (a ratio of 10 to 1 desirable) meets these requirements. The current may be varied from trial to trial by varying either the voltage or the resistance. In such circuits, if the switch is in series with the dropping resistance and the initiator in the wrong order, the distributed capacitance of the circuit can get charged to the supply voltage and discharged with an initial surge sufficient to fire the initiator. One means of insuring against such spurious effects is that of shunting the initiator with a switch that is opened to fire the initiator.

12-2.2.3 GAPS AND BARRIERS

The relative sensitivity of various explosives to initiation by detonation of nearby charges can be determined from the results of trials with varying gaps or barriers interposed[32]. In such evaluations, determinations are made of the mean and deviation of the gap or barrier using data collection schemes and statistical procedures similar to those described in par. 12-1.2. The result is a threshold value of gap or barrier which will result in detonation.

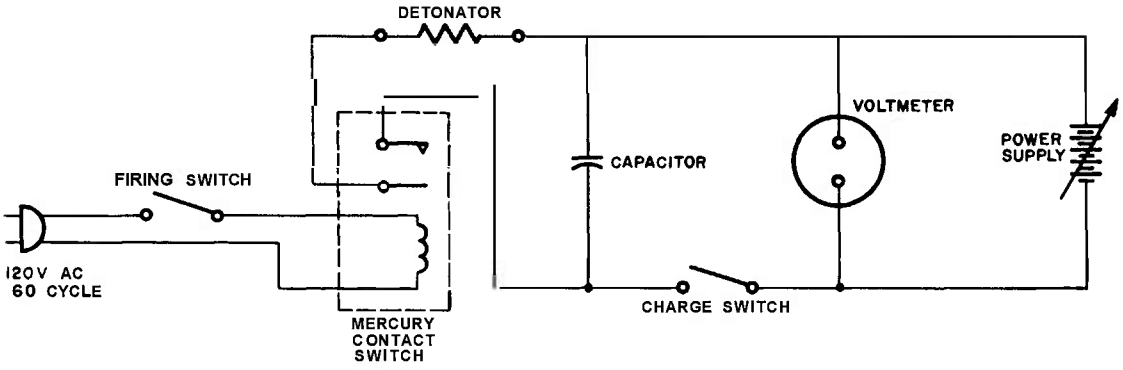

Figure 12-8. Typical Condenser Discharge Firing Circuit for Testing Electric Initiators

It must be remembered, however, that the use of gap or barrier tests to evaluate the reliability of systems in which gaps or barriers are not part of the intended design is dubious at best. As pointed out in pars. 3-2.2.5 and 7-2.2.1 gaps and barriers, particularly when combined, may actually improve a system.

The Varicomp technique has been devised for this reason[33]. Here, construction, materials, and spatial configuration of a system under investigation are as nearly identical with those of the intended design as it is practical to make them. The probability of transmission between two consecutive components is reduced by the substitution of a less sensitive material in the acceptor element in the transfer under investigation. By the use of a series of explosives of graded sensitivity, using the sensitivity or composition as the independent variable in a data gathering system like the Bruceton technique, data may be obtained from which it is possible to determine the sensitivity or composition for 50% functioning and its standard deviation.

Performance of explosives subjected to large scale gap tests has been compiled[34]. Explosives of varying sensitivity also have been used to estimate the reliability with which main charges may be expected to be initiated by means of boosters (see par. 12-2.1.2.5).

12-2.3 OUTPUT

12-2.3.1 DETONATION

The output of detonators, leads, and boosters consists of a shock wave and high velocity hot particles. A number of indirect output tests are in use which are designed to give a quantitative measure of the ability of the test component to propagate the detonation in the next component. In addition to the tests listed, gaps and barrier tests (par. 12-2.2.3) may be used for this purpose.

12-2.3.1.1 SAND TEST

The sand test, in which the output is characterized in terms of the amount of sand which is crushed by a detonator, gives a quantitative result for each trial. Early investigator~~found good correlation between sand test results for blasting caps and their effectiveness in initiating dynamite. More recently, it has been found that detonators that give good sand test results may fail to initiate booster charges. The trend is away from sand tests for evaluation of explosive components.

12-2.3.1.2 LEAD DISK TEST

This test consists of firing a detonator in direct end-on contact with a lead disk, in

accordance with test 302 of MIL-STD-331[j]. The size of the hole produced in the disk is a measure of the output. Hole sizes are measured by means of taper gages. In general, the lead disk test is a reasonably useful quality control test that correlates with the effectiveness of detonators. Significance in terms of physical quantities is difficult to assess. At least one situation has been experienced in which modifications in loading procedure which increased output according to the lead disk test decreased effectiveness in initiating subsequent charges.

12-2.3.1.3 STEEL DENT TEST

The steel dent test consists of firing a detonator in direct end-on contact with a steel block in accordance with Test 301.1 of MIL-STD-331[j]. The depth of dent, determined by a dial indicator, is a measure of output. Explosive components may be either unconfined or confined in polystyrene, brass, aluminum, or steel. The depth of dent correlates well with initiating effectiveness. The low rate detonation, which crushes nearly as much sand as high order detonation, means no dent whatever in a steel plate. It has been shown that the depth of dent is proportional to the excess of pressure over the yield strength of the steel of the dent block, integrated over the volume of the detonation head.

It has been found that a detonator of 0.190-in. diameter or larger, which produces a dent 0.010 in. deep in a mild steel block, will initiate a lead of tetryl or RDX under favorable conditions. Specification dent requirements for detonators to be used in fuzes are usually at least 0.015 to 0.020-in. deep and many produce dents up to 0.060 in. deep.

Dent tests also are used to measure the output of leads and boosters, and to determine whether token main charges have been caused to detonate high order. Plates used for this purpose are sometimes referred to as witness plates.

12-2.3.1.4 ALUMINUM'DENT TEST

The output test using an aluminum block is performed in accordance with Test 303 of MIL-STD-331[j]. This test is identical in all respects with the steel dent test except that the dent block is made of aluminum. Substitution of the softer metal allows testing of components whose output is insufficient to dent steel.

12-2.3.1.5 HOPKINSON BAR TEST

In this test, the output of a detonator is characterized in terms of the velocity imparted to a steel time piece that is in intimate contact with one end of a steel bar when the detonator is fired at the other end (see Fig. 12-9). The velocity of the time piece is a measure of the average pressure over the time it takes for the shock to traverse its length and the tension wave to return'[5]. For steel, this time in microseconds is almost exactly equal, numerically, to the length of the time piece in centimeters (since both shock and tension waves propagate at 0.5 cm/μsec).

Although the velocity of the time piece is a precise and rigorous measure of the momentum of the shock in the bar, the relationship between this shock and the output of the explosive charge which induced it is less clear. The coupling between the output of the detonator and the input end of the bar is necessarily quite poor. Direct exposure of the bar to the action of the detonator results in damage with each shot and progressively changing characteristics. The effect of attenuators (to protect the bar) on output has not been established. Hence, the test is only in experimental use. However, it is used extensively in the U.K.

12-2.3.1.6 VELOCITY OF THE AIR SHOCK

Since the velocity of an air shock is a direct measure of its strength, measurements of air shock velocity may seem to be an attractive means of measuring detonator output. However, at the short range over which the blast

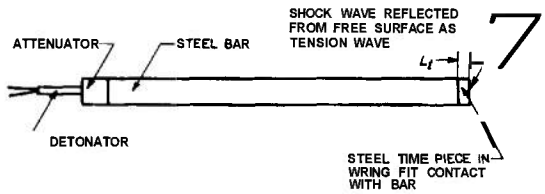

Figure 12-9. Principle of Hopkinson Bar Measurement of Detonator Output

output of a detonator is effective, a larger part of the effectiveness is attributable to the kinetic energy of the reaction products which support the shock than to the shock itself. In this respect, an inversion results from the nonideality of the reaction product gases. Hence, velocity of the air shock is not a suitable output measure.

12-2.3.1.7 DETONATION PRESSURE MEASURED BY MEANS OF SHOCK TRANSDUCERS

The output of detonators may be determined by measuring detonation pressure waves[36]. Two types of solid state transducers are used to record the intense stress waves involved. One, based upon changes in electrical conductivity of materials normally considered as insulators, provides not only a reading of the peak intensity of the wave but also a record of pressure variation with time. The second transducer utilizes the polarization of molecular solids to provide a device more capable of resolving the very steep shock fronts often produced by explosives of high brisance.

The explosive item to be tested is placed with its output end on the transducer and initiated in the normal manner. When the detonation wave passes through the transducer, a signal proportional to the magnitude of the pressure is produced which is recorded on an oscilloscope or other electronic device thus indicating the output of the explosive.

12-2.3.2 NONDETONATING ITEMS

The output of nondetonating explosive charges requires entirely different measuring techniques from those of detonating charges. On the one hand, detonating output is more difficult to measure but on the other hand more work has been done with detonators and more tests have been standardized. Nondetonating output includes the output of flames and other parameters (primers, squibs, delay columns) and mechanical output (explosive actuators).

12-2.3.2.1 PRIMER OUTPUT

An experimental setup used for the testing of primer output is a manometer connected to a closed chamber into which the primer fires. The output pulse of the primer imparts momentum to the liquid (Hg) in the manometer, causing it to displace to a maximum and recede. The maximum displacement is proportional to the momentum and is referred to as the impulse of the primer. The volume of gas emitted may, of course, be measured after the manometer reaches equilibrium.

A thermocouple placed in the flame gives some measure of temperature although the question may be raised as to whether it ever reaches equilibrium. Perhaps, in many applications, the temperature reached by such a thermocouple, which is proportional to the quantity of heat transferred to a solid by the flame, is more pertinent than the actual flame temperature.

Light output, as measured by a photocell, has also been used as a measure of primer output. If the light is mainly blackbody radiation, it may be quite significant. However, the presence of some elements such as sodium, which have strong spectral output, might bias such results unduly.

The lead disk test, employed for detonating output has been used for primers.' Primer output does not puncture the disk; rather the volume of the dent becomes the measure of output. Softer materials, such as styrofoam, also have bedn used experimentally for this purpose to achieve a larger volume.

12-2.3.2.2 SPECIAL PRIMER OUTPUT PARAMETERS

The pressure-time output of primers provides a quantitative measure of total energy. A test fixture has been designed which has the ability to integrate this output[37].

A series of experimental primer output measurements included a unique test to determine the effect of primer output on an inert propellant (acrylic polymer) in a cased round. A noticeable weight loss occurred after firing the primer that was associated with "unzippering" of the inert polymer into a gasous manometer. The amount of polymer gasified was considered to be a function of such parameters as available chemical energy and rate of gas production[38].

Primer times have been measured in attempts to characterize primer lots and assess deviations of individual primer samples from other members of a lot. Primer time has been defined as the interval between primer initiation (as recorded by impacting of a firing pin or delivery of the required input energy pulse) and the occurrence of some measurable event (such as the ionization of primer reaction products or the severing of electrically conductive pencil lead).

Photographic measurements of the extent (length, width, and height) of the primer flame have also been employed in attempts to assess ignition capabilities of primers. However, no direct correlations have been reported to date.

12.2.3.2.3 MECHANICAL OUTPUT

The series of mechanical actuators includes dimple motors, bellows motors, piston motors, and switches. The output of these devices is usually specified in terms of pushing a given weight through a given distance. Use of a test fixture employing dead weights is therefore best.

Output tests have often been performed by having the actuator push against a spring. Since the spring force is not constant, it is important to specify in this case whether the given force is measured at the start or end of the stroke. In the case of switches, it has been suggested that the initial hump in the load curve of a switch can be simulated by having a pin rupture a metal foil.

12-2.4 ENVIRONMENT

Explosive charges must not only perform as intended; they also must be safe and operable in the environment in which they are expected to perform. Encompassing deep water to outer space, the range of military environments is indeed formidable. A series of tests has been developed to simulate the various conditions to which ammunition may be subjected.

Most of the tests have been standardized to assure uniform conditions. The bulk of the tests of interest to the explosive charge designer are contained in MIL-STD-331[j]. A convenient summary of descriptions and use of these tests has been compiled for fuze components[g].

The explosive charge designer faces more severe testing problems than the fuze designer because of the relative smallness of his components in the system. For some of the components, the MIL-STD tests are frankly meaningless. There is no reason, for example, to subject a booster charge pellet to the jumble test. On the other hand, it is dangerous to introduce an untested component, particularly a new concept, into the military environment. In some instances, other system components may help (confinement, structural strength, sealing, cushioning); in other instances, they may hinder (incompatible materials, unplanned electric paths, stress concentrations). This problem must be resolved by sound engineering judgment. If, for example, detonators are to be subjected to a drop test, they can be placed within a jig that permits positioning and introduces confinement[39].

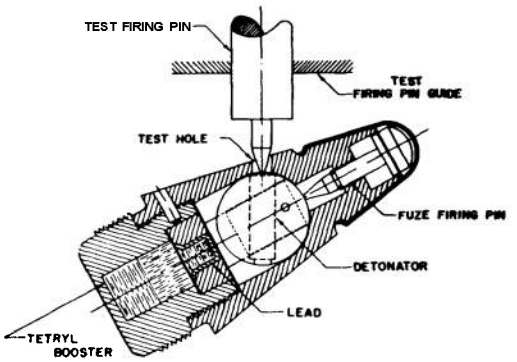

Figure 12-10. Arrangement for Detonator Safety Test

The chief purpose of environment tests is to insure safety during rough handling and surveillance. The safety tests are of two types, destructive and nondestructive. Operability is *not* required after destructive tests, such as jolt; while operability is required after nondestructive tests, such as transportation-vibration. All surveillance tests are nondestructive.

It is important to ;understand that MIL-STD tests are never specified unless they serve a definite purpose. The selection of tests for application in a particular case requires engineering judgment. Tests must not be applied indiscriminately. On the other hand, once a standard test is prescribed, it is mandatory that it be performed precisely as specified without deviation. MIL-STD-33 1 includes a number of tests that apply only to special conditions, such as the jettison tests.

Four tests in MIL-STD-331 apply specifically to explosive components. The Static Detonator Safety test (Test 115) determines whether the rest of the train will be set off when the detonator is initiated in the unarmed position. The fuze or test fixture must be modified so that the detonator may be initiated in the safe position. A typical modification is shown in Fig. 12-10. The test is successful if no explosive charge beyond the arming device functions, chars, or deforms. The detonator output tests by lead disk, steel dent, and aluminum dent are discussed in par. 12-2.3.1.

As in performance tests, programming is important in the environmental series. It may be desirable to combine several tests sequentially or to add tests to introduce such special conditions as acceleration that can be performed in air gun or centrifuge. Sufficient samples must be tested to assure significant results. As a rule of thumb, no fewer than five samples should ever be tested. The quantity depends on the criteria for test acceptance, the destructive test (criterion: did this item explode?) requiring fewer samples than the nondestructive test (criterion: is performance affected?). For electric initiators, specific guidance for test selection is given in MIL-STD-322' and MIL-I-23659[3].

REFERENCES

a-k Lettered references are listed in the General References at the end of this handbook.

1. G. W. Snedecor and William G. Cochram, *Statistical Methods,* Iowa State University Press, Ames, 1967.

2. **AMCP** 706-110, Engineering Design Handbook, *Experimental Statistics, Section I, Basic Concepts and Analysis of Measurement Data.*

3. AMCP 706-111, Engineering Design Handbook, *Experimental Statistics, Section 2, Analysis of Enumerative and Classificatory Data.*

4. AMCP 706-112, Engineering Design Handbook, *Experimental Statistics, Section 3, Planning and Analysis of Comparative Experiments.*

5. AMCP 706-113, Engineering Design Handbook, *Experimental Statistics,* Sec*tion* **4,** *Special Topics.*

6. AMCP 706-114, Engineering Design Handbook, *Experimental Statistics, Section 5, Tables.*

7. D. J. Wilde and C. S. Beightler, *Foundations of Optimization,* Psentice Hall, Inc., Englewood Cliffs, N.J., 1967.

8. A. Leon, "A Classified Bibliography on Optimization", in A. Lavi and T. Vogl, Eds., *Recent Advances in Optimization Techniques,* John Wiley & Sons, Inc., New York, 1966, pp. 599-649.

9. *Statistical Analysis for a New Procedure in Sensitivity Experiment,* AMP Report. 101.1R SRG-P No. 40, Statistical Research Group, Princeton University, Princeton, N.J., July 1944 (ATl-034-558).

10. L. Shainheit, *Estimating the Mean and Standard Deviation from a Bruceton Statistical Analysis,* Report TR 3413, Picatinny Arsenal, Dover, N.J., August 1966.

11. C. W. Churchman, *Statistical Manual, Methods of Making Experimental Inferences.* Pitman-Dunn Laboratories, Frankford Arsenal, Philadelphia, Pa., 1951.

12. D. E. Hartvigsen and J. P. Vanderbeck, *Sensitivity Tests for Fuzes,* NAVORD Report 3496, Naval Weapons Center, China Lake, Calif., March 1955.

13. D. J. Finney *Probit Analysis, A Statistical Treatment of the Sigmoid Response Wave,* Cambridge University Press, Mass., 1952.

14. J. Berkson "A Statistically Precise and Relatively Simple Method Estimating the Bio-Assay with Quantal Response", J. Am. Statistical Assoc., **48,** 263, 565-99 (1953).

15. Basil T. Fedoroff, et al., *Encyclopedia of Explosives and Related Items, Vol. 1,* Picatinny Arsenal, Dover, N.J., 1960, "Physical Tests Used to Determine Explosive Properties", pp. VII - XXVI (AD-257 189).

16. *Safety and Performance Tests for Qualification of Explosives,* Report NAVORD OD 44811, Vol. 1, Naval Weapons Center, China Lake, Calif., 1 January 1972.

17 A. J. Clear, *Standard Laboratory Procedures for Determining Sensitivity, Brisance, and Stability of Explosives,* Report TR 3278 Rev. 1, Picatinny Arsenal, Dover, N.J., April 1970.

18. V. E. Voreck and E. W. Dalrymple, *Development of an Improved Stab Sensitivity Test and Factors Affecting Stab Sensitivity of M-55 Detonators,* Report TR 4263, Picatinny Arsenal, Dover, N.J., June 1972.

19. *Manual of Sensitiveness Tests,* Canadian Armament R&D Establishment, Val Cartier, Quebec, 1967 (AD-824 359L).

20. S. D. Stein, *Quantitative Study of Parameters Affecting Bullet Sensitivity of Explosives,* Report TR 2636, Picatinny Arsenal, Dover, N.J., September 1959.

21. Louis Jablansky, *Laboratory Scale Test Device to Determine Sensitivity of Explosives to Initiation by Setback Pressure,* Report TR 2235, Picatinny Arsenal, Dover, N.J., September 1955.

22. *Determination of Cook-Off Temperatures,* Journal Article 43.0 of the JANAF Fuze Committee, 3 May 1967 (AD-816 238).

23. W. W. Wendlandt, *Thermal Methods of Analysis,* Vol. 19, Chemical Analysis Series, Interscience Publishers, New York, N.Y. 1964.

24. E. E. Mason and D. H. Zehner, *The*

Development of Techniques to Detect and Determine the Effects of Heat on Selected Primary Explosives, R&D Report 81, Naval Weapons Station, Yorktown, Va., 22 January 1962.

25. E. E. Mason and H. A. Davis, *Application of Differential Thermal and Thermogravimetric Analyses to Military High Explosives,* NAVORD Report 5802, Naval Weapons Station, Yorktown, Va., 22 January 1962 (AD-232 625).

26. *Second ONR Symposium on Detonation,* Office of Naval Research, Navy Dept., February 9-11, 1955, papers 15-17, pp. 209-64.

27. L. D. Hampton and R. H. Stresau, *Small Scale Technique for Measurement of Detonation Velocities,* NAVORD Report 2282, Naval Ordnance Laboratory, Silver Spring, Md., 27 December 1951.

28. U.S. Patent-3,528,280, T. Q. Ciccone and J. F. Kowalick, *Apparatus and Method for Measuring Detonation Velocity in Explosives,* 15 September 1970.

29 Donna Price, "Dependance of Damage Effects Upon Detonation Parameters or Organic High Explosives", Chemical Reviews, ***59,*** 801-25 (1959).

30. H. T. Simmons, Sr., *The Vacuum Thermal Stability Test for Explosives,* Report NOLTR 70-142, Naval Ordnance Laboratory. Silver Spring, Md., 28 October 1970.

31. MIL-1-23659 (WEP), *Initiators, Electric, Design and Evaluation of,* Dept. of Defense, 18 March 1963.

32. *Proceedings of the Electric Initiator Symposium (U),* held at The Franklin Institute, Philadelphia, Pa., September 11-12, 1957, papers XXIII and XXXIII (AD-153 579) (Confidential report).

33. J. N. Ayers, et al., *Varicomp, A Method for Determining Detonation-Transfer Probabilities,* NAVWEPS Report 7411, Naval Ordnance Laboratory, Silver Spring, Md., July 1961.

34. I. Jaffe, et al., *The NOL Large Scale Gap Test, Compilation of Data for Propellants and Explosives, II (U),* Repbrt NOLTR 65-177, Naval Ordnance Laboratory, Silver Spring, Md., 15 November, 1965 (Confidential report).

35. C. G. Storm and W. C. Cope, *The Sand Test for Determining the Strength of Detonators,* Technical Paper 125, Bureau of Mines, Dept. of Interior, 1916.

36. R. J. Eichelberger and G. E. Hauver, "Solid State Transducers for Recording of Intense Pressure Pulses", *Les Ondes de Detonation,* Editions du Centre National de la Recherche Scientifique, Paris, 1962.

37. M. L. Schimmel and V. W. Drexelius, "Measurement of Explosive Output", in *Proceedings of the Fifth Symposium on Electroexplosive Series,* held at The Franklin Institute, Philadelphia, Pa., June 13-14, 1967, pp. 1-5.1-.20 (AD-720 454).

38. M. P. Devine, et al., *A Comparison of Several Types of 5.56mm and 7.62mm Primers,* Report R1932, Frankford Arsenal, Philadelphia, Pa., July 1969.

39. R. E. Trezona and E. L. Miller, *Forty-Foot Drop Test for Detonators (U),* Report 28, Explosives Development Section, Picatinny Arsenal, Dover, N.J., May 1958 (Confidential report).

GLOSSARY

This Glossary is an excerpt from *Nomenclature and Definitions in the Ammunition Area,* MIL-STD-444, 9 July 1964. Definitions are often abbreviated and only terms pertaining to explosive charge design are included.

Actuator. An explosive device that produces gas at high pressure in short periods of time into a confined volume for the purpose of doing work. Dimple motors, bellows motors, and switches are examples of actuators.

Booster. An assembly of metal parts and explosive charge provided to augment the explosive components of a fuze to cause detonation of the main explosive charge of the ammunition. It may be an integral part of the fuze. (This term is often used as an abbreviation for booster charge).

Booster Charge. 1. The explosive charge contained in a booster. It must be sufficiently sensitive to be actuated by the small explosive elements in the fuze and powerful enough to cause detonation of the main explosive filling. 2. The amount or type of explosive used to reliably detonate the bursting charge of ammunition.

Brisance. The ability of an explosive to shatter the medium which confines it; the shattering effect shown by an explosive.

Combustion. The continuous rapid combination of a substance with various elements such as oxygen or chlorine or with various oxygen bearing compounds, accompanied by the generation of light and heat.

Cook-Off. The deflagration or detonation of ammunition by the absorption of heat from its environment. Usually it consists of the accidental and spontaneous discharge of, or explosion in, a gun or firearm caused by an overheated chamber or barrel igniting a fuze, propellant charge, or bursting charge.

Deflagration. A very rapid combustion sometimes accompanied by flame, sparks, or spattering of burning particles. A deflagration, although classed as an explosion, generally implies the burning of a substance with self-contained oxygen so that the reaction zone advances into the unreacted material at less than the velocity of sound in the unreacted materials.

Delay. An explosive train component that introduces a controlled time delay in the functioning process.

Detonation. An exothermic chemical reaction that propagates with such rapidity that the rate of advance of the reaction zone into the unreacted material exceeds the velocity of sound in the unreacted material. The rate of advance of the reaction zone is termed detonation velocity. When this rate of advance attains such a value that it will continue without diminution through the unreacted material, it is termed the stable detonation velocity. When the detonation velocity is equal to or greater than the stable detonation velocity of the explosive, the reaction is termed a high order detonation. When it is lower, the reaction is termed a low order detonation.

Detonator. An explosive train component which can be activated by either a nonexplosive impulse or the action of a primer and is capable of reliably initiating high order detonation in a subsequent high explosive component of train. When activated by a nonexplosive impulse, a detonator includes the function of a primer. In general detonators are classified in accordance with the method of

initiation; such as percussion, stab, electric, flash, etc.

Explosion. A chemical reaction or change of state which is effected in an exceedingly short time with the generation of a high temperature and generally a large quantity of gas. An explosion produces a shock wave in the surrounding medium. The term includes both detonation and deflagration.

Explosive. A substance or mixture of substances which may be made to undergo a rapid chemical change, without an outside supply of oxygen, with the liberation of large quantities of energy generally accompanied by the evolution of hot gases.

Explosive Train. A train of combustible and explosive elements arranged in an order of decreasing sensitivity. Its function is to accomplish the controlled augmentation of a small impulse into one of suitable energy to cause the main charge of the munition to function. It may consist of primer, detonator, delay, relay, lead, and booster charge, one or more of which may be either omitted or combined.

Firing Pin. An item in a firing mechanism of a fuze which strikes and detonates a sensitive explosive to initiate an explosive train.

High Explosive (HE). An explosive which when used in its normal manner detonates rather than deflagrates or burns; i.e., the rate of advance of the reaction zone into the unreacted material exceeds the velocity of sound in the unreacted material.

Igniter. A device containing a specially arranged charge of a ready burning composition, usually black powder, used to amplify the initiation of a primer.

Initiator. A device used as the first element of an explosive train, such as a detonator or squib, which upon receipt of the proper mechanical or electrical impulse produces a burning or detonating action. It generally contains a small quantity of a sensitive explosive.

Lead. (Rhymes with "feed") An explosive train component which consists of a column of high explosive, usually small in diameter, used to transmit detonation from a detonator to booster charge.

Low Explosive (LE). An explosive which when used in its normal manner deflagrates or burns rather than detonates; i.e., the rate of advance of the reaction zone into the unreacted material is less than the velocity of sound in the unreacted material. Low explosives include propellants, certain primer mixtures, black powder, and delay compositions.

Primary High Explosive. An explosive that is extremely sensitive to heat and shock and is normally used to initiate a secondary high explosive. A primary explosive is capable of building up from a deflagration to detonation in an extremely short distance and time; it can also propagate a detonation wave in an extremely small diameter column.

Primer. A relatively small and sensitive initial explosive train component which on being actuated initiates functioning of the explosive train and will not reliably initiate high explosive charges. In general, primers are classified in accordance with the methods of initiation; such as percussion or stab.

Relay. An explosive train component that provides the required explosive energy to cause the next element in the train to function reliably. It is especially applied to small charges that are initiated by a delay element and, in turn, cause the functioning of a detonator.

Secondary High Explosive. A high explosive which is relatively insensitive to heat and shock and is usually initiated by a primary high explosive. It requires a relatively long distance and time to build up from a deflagration to detonation and will not propagate in extremely small diameter columns.

Secondary high explosives are used for boosters and bursting charges. Sometimes called noninitiating high explosives.

Squib. **A** small explosive device, similar in appearance to a detonator, but loaded with low explosive, so that its output is primarily heat (flash). Usually electrically initiated, it is provided to initiate action of pyrotechnic devices.

GENERAL REFERENCES

R-1 INTRODUCTION

A number of general references on the subject of explosive trains are here combined for the convenience of handbook users. Specifically listed are (1) general references consisting of handbooks, manuals, and compilations, (2) JANAF Journal articles, and (3) Military Specifications. The general references are identified by letter to make multiple referral simpler. Note that specific references used for the material discussed in this handbook are listed at the end of each chapter.

Much of the information for this handbook was obtained from an earlier handbook, Ref. a, par. R-2.

It is an underlying assumption that the reader has some knowledge of military explosives. For this reason, details of explosive materials are not treated in this handbook. Such data are contained in Refs. b, c, and d. Ref. d contains the most up-to-date collection of physical properties. Refs. e and f contain design data for specific explosive components, and Ref. g treats the design of fuzes of which explosive components are a part. Ref. h covers dimensioning while Refs. i and j are test procedures. Ref. k is the encyclopedia volume dealing with detonations and detonators.

The JANAF Fuze Committee wrote a series of 53 Journal articles of which a dozen pertain to explosive components. These are listed in par. R-3. Finally, in par. R-4 there are listed the Military Specifications covering explosives and explosive compositions.

R-2 GENERAL REFERENCES

a. *Ordnance Explosive Train Designers' Handbook,* Report NOLR 1111, U.S. Naval Ordnance Laboratory, White Oak, Md., April 1952 (AD-029 151).
A handbook of research results, data, and tests on explosives and explosive components.

b. TM 9-1300-2 14, *Military Explosives,* Dept. of Army, November 1967.
A manual about the common military explosives, covering descriptions, properties, tests, and handling methods.

c. AMCP 706-106, Engineering Design Handbook, *Elements* of *Armament Engineering, Part One Sources* of *Energy.*
A handbook on fundamental facts about chemical energy including theory of explosive reactions and properties of explosives.

d. AMCP 706-177, Engineering Design Handbook, Explosive Series, *Properties* of *Explosives of Military Interest.*
Lists the properties and characteristics of over 100 explosive compounds and mixtures.

e. *Electrical Initiator Handbook (U),* 3rd Ed., The Franklin Institute, April 1960 (AD-3 19 980) (Confidential report).
Has performance characteristics of 25 electric initiators, with curves of input sensitivity and functioning time.

f. MIL-HDBK-137, *Fuze Catalog, Volume 3, Explosive Components (U),* Dept. of Defense, 20 February 1970 (Confidential report).
A compilation of military and technical data on all standard and developmnetal fuze explosive components.

g. AMCP 706-2 10, Engineering Design Handbook, Ammunition Series, *Fuzes.*

A handbook for the designer of fuzes and fuze components.

h. MIL-STD-320, *Terminology, Dimensions and Materials* of *Explosive Components for Use in Fuzes,* Dept. of Defense, July 1962.
Establishes terminology, dimensions, and preferred structural materials for explosive components.

i. MIL-STD-322, *Basic Evaluation Test for Use in Development* of *Electrically Initiated Explosive Components for Use in Fuzes,* Dept. of Defense, 15 October 1962.
Provides a uniform evaluation of input, output, and environmental response of initiated explosive elements prior to their use in military items.

j. MIL-STD-331, *Fuze and Fuze Components, Environmental and Performance Tests For,* Dept. of Defense, 1 June 1971.
Specifies the development and production of fuzes and fuze components.

k. B.T. Federoff and O.E. Sheffield, *Encyclopedia* of *Explosives and Related Items, Vol. 4, Detonation to Detonators,* Report TR 2270, Picatinny Arsenal, Dover, N.J. 1969 (AD-795 472).
Contains more than 1000 pages of detailed entries pertaining to all aspects of detonations and detonators.

R-3 JOURNAL ARTICLES OF THE JANAF FUZE COMMITTEE PERTAINING TO EXPLOSIVE TRAINS

13.0 *The Sensitivity* of *Explosive Initiators,* 13 February 1958, AD-2.08 252.

14.0 *A Discussion* of *the Need for Study* of *the Causes* of *Unintentional Initiations* of *Explosive Devices Such as Are Used in Fuze Explosive Trains,* 13 February 1958, AD-210 743.

17.0 *The Physical Properties* of *Explosives and Inert Materials Whose Physical Properties Resemble Those of Explosives,* 1 March 1960, AD-468070.

20.0 *A Survey* of *Explosively Actuated Devices Used in Fuzes,* September 1960, AD-222 604.

21.0 *Some Aspects of the Design* of *Boosters,* Richard Stresau and Milton Lipnick, Diamond Ordnance Fuze Laboratories, (now U.S. Army Harry Diamond Laboratories), Washington, D.C., 20 June 1961, AD-270 275.

22.0 Some Aspects of Pyrotechnic Delays, 5 December 1961, AD-270 444.

30.0 *Exploding Bridgewire Surveys,* Explosives Component Subcommittee, 23 October 1963, AD-831 831.

31.0 *A Compendium of Pyrotechnic Delay Devices,* Explosives Components Subcommittee, 23 October 1963, AD-474 833.

43.0 *Determination* of *Cook-Off Temperatures,* Explosive Components Subcommittee, 3 May 1967, AD-816 238.

44.0 *Mild Detonating Cord,* Explosive Components Subcommittee, 3 May 1967, AD-816 229.

46.0 *RF Attenuation* of *Initiators,* Explosive Committee, 3 May 1967, AD-828 308.

48.0 *The Use* of *Conductive Mixes in Electro-Explosive Devices,* H.S. Leopold, Naval Ordnance Laboratory, White Oak, Md., Explosive Components Subcommittee, 3 May 1967, AD-829 731.

R-4 MILITARY SPECIFICATIONS ON EXPLOSIVES AND EXPLOSIVE COMPOSITIONS

MIL SPEC NO.	*TITLE*
A-159C	Antimony Sulfide
B-162D	Barium Nitrate
D-204A	Dinitrotoluene for Use in Explosives
P-223B (MU)	Powder, Black
N-244A (MU)	Nitrocellulose
N-246	Nitroglycerin
T-248A (MU)	TNT
T-339B	Tetryl
P-387B	PETN
R-398C	RDX
C-401D	Composition B
C-427A	Composition C-3
C-440B	Compositions A-3 and A-4
N-494	Nitrogoanadine (Picrite)
A-512A (MU)	Aluminum Powder, Flaked, Graded, Atomized
L-757A	Lead Styphnate, Normal
L-3055A	Lead Azide
C-13477B (MU)	Cyclot01
T-13723	Tetranitrocarbazole

MIL SPEC NO.	*TITLE*
M-14745 (MU)	Minol-2 Composition
E-14970A (MU)	Explosive Composition A-5
P-14999	Powder, Molding Compound Explosive (PBX)
L-16355C	Lead Styphnate, Basic
R-21723	RDX Composition CH6
E-22267A	Explosive Compositions, HBX type
C-45010A	Composition C-4
C-45113A (MU)	Composition B-3
D-45413A	Dynamite, Military
H-45444A (Ord)	HMX
O-45445A (Ord)	Octol
P-45447 (Ord)	Powder, Molding, PBX 9010
P-45486A (MU)	Pellets, RDX
L-46225C (MU)	Lead Azide, RD-1333
P-46464A (Mu)	Pellets, Tetryl
E-46495	Explosive Composition, HTA-3
L-46496 (Ord)	LMNR
C-46652 (Mu)	Composition B-4
T-46938 (MU)	Tetracene
E-81111	PBXN-5

INDEX

Acceleration, 1–9, 4–2, 4–14, 6–9
Acoustic wave, 2–10
Activation energy, 2–2
Actuator, 9–1, 12–21
Additive effect on sensitivity, 3–6
Adiabatic compression, 2–20, 4–15
Aerodynamic heating, 1–7, 4–8
Air
  gap test, 3–4, 3–8
  shock velocity, 12–19
  transport, 11–6
Aluminum dent test, 12–19
Ammunition, 8–1, 11–3
Arming, 1–12, 1–15
Arrhenius equation, 2–2
Auxiliary booster, 8–7
Availability, 10–13

Ballistic mortar, 12–15
Barrier, 3–4, 3–6, 7–6, 12–17
Base charge, 5–20
Bases for explosive charge selection, 1–4, 5–4, 6–10
Bellows motor, 9–1, 12–21
Blast, 3–13, 12–15
Blasting cap, 9–6
Bolt, 9–2
Bomb, 8–1
Bomb drop test, 4–13, 12–11
Bonfire test, 12–13
Boosted surround, 8–7
Booster
  auxiliary, 8–7
  charge, 7–1
  construction, 7–11
  description, 7–1
  design, 7–6
  explosive, 7–2
  function, 7–1
  loading, 7–9
  output, 7–8
  position, 8–7
  sensitivity test, 3–3, 12–10
Bridgewire, 2–17, 4–5, 5–10, 5–14, 5–25, 5–26. *See also:* EBW
Brisance, 12–15
Bruceton technique, 12–7
Bullet impact test, 4–4, 4–12, 12–10
Bureau of Mines impact test, 12–9
Burning, 2–1, 2–5, 4–6, 6–7
Burning rate, 2–6, 6–7

Carbon bridge, 2–19, 5–14, 5–25
Casting, 10–1
Cavity, 4–15
Cementing, 10–13
Centrifugal casting, 10–4
Chapman-Jouguet condition, 2–12
Characteristics of explosives, 10–15
Charge configuration effect, 3–10
Chemical
  ammunition, 8–1
  decomposition, 4–2
  interaction, 4–11, 10–15
Cluster ammunition, 8–2
Column diameter, 3–1
Compatibility, 4–11, 10–15
Condenser discharge test, 12–16
Conductive explosive mix electric initiator, 2–19, 5–15
Conductive film electric initiator, 2–18, 5–15, 5–26
Confidence level, 12–4
Confinement, 1–11, 3–3, 3–6, 5–21, 6–10, 7–5, 7–11, 8–7
Considerations in design, 1–13
Construction. *See:* specific explosive charge
Continuity equation, 2–9
Controlled fragmentation, 3–16
Cook-off, 4–6, 12–11
Cost effectiveness, 1–15
Cost factor, 10–13
Cup, 5–6, 5–22, 6–10

d'Autriche method, 12–14
Decibang test, 3–5
Decomposition of explosive, 2–1
Definitions, 1–1, G–1
Deflagration, 2–1, 2–5, 4–6, 6–7
Delay charge
  composition, 6–3
  description, 6–1
  design, 6–10
  loading, 6–9
  output, 6–3
Demolition block, 9–6

INDEX (Con't.)

Demolition device, 9–4
Density, 10–15, 10–17. See *also:* Loading density
Design considerations, 1–1, 1–13, 5–1, 5–16, 6–10, 7–4, 7–6, 8–1, 9–1
Destructor, 9–4
Detonating cord, 3–12, 9–5
Detonation
  actual, 2–13, 3–10
  detonator output, 5–18
  front, 3–1, 3–10
  growth, 2–7
  ideal, 2–5, 3–9
  pressure, 2–9, 5–21, 10–15, 12–14
  spontaneous, 2–26
  transfer to another charge, 3–1, 12–18
  transition from deflagration, 2–1, 2–6
  velocity, 2–7, 2–9, 2–12, 2–14, 3–10, 10–15, 12–13
  wave, 2–11, 7–8, 12–18
Detonator
  construction and fabrication, 5–1, 5–22
  design problem, 5–12
  function, 5–1
  output, 5–18, 12–13
  packing, 11–2
  selection, 5–4
Dextrinated lead azide, 2–7
Differential thermal analysis, 12–11
Dimensional change, 4–4
Dimensional interaction, 3–1
Dimple motor, 9–1, 12–21
Disk thickness, 5–6
Driver, 9–1
Drop test, 2–21, 4–4
Dual arming safety, 1–12, 1–14

EBW, 2–24, 5–13, 5–26
Economics, 1–15
Electric
  aspects, 1–13, 4–16, 12–11
  initiation, 1–13, 2–17, 5–2, 6–1
  initiator, 5–2, 5–9, 12–16. *See also:* specific explosive charge
  spark initiation, 2–24, 4–16
Electrostatic sensitivity, 1–13, 12–11
Energy-power relationship of initiators, 2–10
Environment
  electrical, 1–13
  military requirements, 4–1, 12–21
  response, 4–1, 12–21
Equation of state, 2–11
Evaluation procedure, 3–3, 4–12, 12–1
Exploding bridgewire, 2–24, 5–13, 5–26
Explosion temperature, 2–2, 2–21, 4–2, 12–10
Explosive
  bolt, 9–2
  characteristics, 10–15
  cord, 9–5
  material, 1–4, 2–7, 2–13, 2–24, 3–6, 4–2, 4–11, 5–14, 5–19, 6–3, 7–2, 8–6, 12–8
  nut, 9–4
  sheet, 9–6
  train, 1–1
Explosive charge. See *also:* specific explosive charge (actuator, booster, delay, detonator, lead, main bursting charge, primer, relay, squib)
  bases for selection, 1–4, 5–4, 6–10
  design considerations, 1–1, 1–13, 5–1
  fabrication, 10–1
  general description, 1–1, 5–1, 6–1, 7–1, 8–1, 9–1
  location with respect to target, 1–12
  packing, 11–3
  purpose, 1–1
  shipping, 11–5
  storing, 11–3
  system approach aspects, 1–7
  testing, 12–8
Extrusion, 10–4
Exudation, 4–5, 10–16

Fabrication, 10–1. *See also:* specific explosive charge
Failure diameter, 6–10, 7–6, 10–15
Failure rate, 12–1
Film bridge electric initiator, 2–18, 5–14, 5–26
Finishing operation, 10–12
Firing energy and power, 5–10
Firing pin, 2–21, 2–23, 5–7
Firing time, 5–12

INDEX (Con't.)

Flame output, 5--16, 12–20
Flash charge, 5–9, 5–26
Flash detonator, 5–2, 5–8, 5–24, 12–16
Flexible linear shaped charge, 9–6
Flying plate test, 12–10
Fragmentation, 1–11, 3–14, 12–15
Frankford run-down method, 12–8
Frequency distribution, 12–2
Friction, initiation, 2–23, 4–3, 4–16, 12–10
Functioning, 1–11, 5–1, 6–1
Functioning time of initiators, 5–11
Fundamental principles, 1–1
Gamma radiation, 4–18
Gap and barrier, 3–4, 3–6, 7–5, 12–10, 12–17
Gas
  law, 2–12
  transmission, 2–19
  volume, 10–15
Gasless delay compositions, 6–5
Glossary, G–1
Graphite film bridge, 2–18, 5–15, 5–26
Grouping of initiator types, 5–3
Growth of detonation, 2–7
Gurney constant, 3–14

Hazard classification, 11–2, 11–3, 11–5
HEAT ammunition, 8–2
Heat
  initiation, 2–3, 2–15, 2–17
  of combustion, 10–15
  of explosion, 5–21, 10–15
  transfer, 2–5
HEP ammunition, 8–2
High explosive
  ammunition, 8–1
  material, 1–4, 2–7, 2–13, 2–24, 3–6, 4–2, 4–11, 5–14, 5–19, 7–2, 8–6, 9–2, 12–8, 12–20
  train, 1–2
High order detonation, 2–6
High temperature effect, 4–2
High temperature explosive, 4–4
Hopkinson bar test, 12–19
Hot gas transmission, 2–19
Hot particle transmission, 2–20
Hot pressing, 10–10
Hot spot theory of initiation, 2–3
Hot wire electric initiator, 2–17, 5–2, 5–9
Hot wire ignition test, 12–13
Hugoniot curve, 2–10
Human factors engineering, 1–16
Humidity environment, 4–2
Hydrostatic pressing, 10–11

Ignition. *See also:* Initiation
  energy, 2–24
  powder, 6–6
  temperature, 2–2, 2–18
Illustrations, list, xiii
Impact
  initiation, 2–21, 4–12
  sensitivity, 2–21, 3–4, 4–3, 4–9
  simulation, 4–1, 4–12, 12–9
  values of explosives, 4-3
  vulnerability test, 12–10
Inert simulant, 8–6
Initiation
  by cook-off, 4–6
  by heat, 2–3, 2–17, 5–8
  by impact, 2–21, 4–12
  by other means, 2–23
  by stray energy, 1–13
  effectiveness, 3–1
  electric, 2–17
  general, 2–15, 3–1
  propagation, 3–1
  sensitivity, 2–18, 2–22, 3–3, 4–3, 4–9, 5–6, 6–4, 7–4, 8–6, 10–14, 12–9
  threshold conditions, 2–15
Initiator. *See:* specific explosive charge
Input characteristics, 2–3, 5–6, 12–16
Irradiation, 4–17
Isostatic pressing, 10–11

Journal articles of the JANAF Fuze Committee, R–2

Laser initiation, 2–26
Large-scale gap test, 3–4, 12–10
Lead
  construction, 7–10
  description, 7–1
  design, 7–4
  explosive, 7–2
  function, 7–1

INDEX (Con't.)

Lead (continued)
  loading, 7–9
  output, 7–8
Lead azide, 2–7, 2–26, 4–11, 5–19, 5–21, 10–15
Lead disk test, 12–18
Lead styphnate, 2–7
Lethality of fragments, 3–15
Lightning, 1–13
Line wave generator, 3–12
Liquid explosive, 10–4
Loading
  density, 2–8, 2–14, 2–22, 3–5, 5–7, 5–23, 6–3, 6–9, 7–7, 10–7
  operation, 5–23, 6–9, 7–9, 8–5, 10–1
  process selection, 10–1
Location of explosive with respect to target, 1–12
Logit procedure, 12–8
Lot-to-lot variation, 3–5
Low explosive
  ammunition, 8–1
  material, 1–4, 6–3, 9–2, 12–20
  order detonation, 2–6
  train, 1–2
Low temperature effect, 4–10
Lucite gap test, 3–8

Mach number, 1–8
Machining, 10–12
Main bursting charge, 1–13, 8–1
MDC, 3–12, 9–5
Mechanical aspects, 1–11
Mechanical output, 12–21
Mechanical initiator. *See:* specific explosive charge
Melting, 4–8
Melting point, 10–15
Mild detonating cord, 3–12, 9–5
Military
  environment, 4–2
  requirements, 4–1
  Specifications, R–3
  Standard tests, 12–21
Mine, 8–1
Mini-detonator, 5–3, 5–22
Misaligned charge, 3–7, 7–10
Moisture effect, 6–4, 6–10
Munroe effect, 3–17

Normit procedure, 12–8

Obturated delay, 6–1, 6–10
Optimization, 12–6
Out-of-line safety, 1–12, 1–14
Output, 3–8, 5–16, 6–3, 7–8, 8–4, 9–2, 10–14, 12–13, 12–18

Packing, 11–1
Particle
  size, 2–7, 6–9
  transmission, 2–20
  velocity, 2–13
Pellet casting, 10–3
Pelletizing, 10–9
Percussion initiation, 2–22, 5–7, 6–1
Percussion primer, 5–2, 5–7, 5–24, 12–16
Picatinny Arsenal impact test, 12–9
Piston motor, 9–1, 12–21
Plastic-bonded explosive, 7–2, 8–5
Plate dent test, 12–15
Plug for electric initiator, 5–25
Porosity of cast charge, 10–2
Press blow, 5–23
Pressing, 5–23, 10–4
Pressure, 2–6, 6–5. *See also:* Detonation pressure
Primary high explosive, 1–4, 2–7, 4–5, 4–12
Primer
  construction and fabrication, 5–1, 5–22
  design problem, 5–12
  function, 5–1
  output, 5–16, 12–20
  packing, 11–2
  pellet, 4–16
  selection, 5–4
Priming composition, 5–7
Principles, 1–1
Probit procedure, 12–8
Projectile, 8–1
Projectile preparation, 10–1
Propagation of detonation, 3–1
Punching and trimming of cups, 5–22
Purpose, 1–1
Pyroswitch, 9–1
Pyrotechnic ammunition, 8–2

INDEX (Con't.)

Quality assurance, 10–16
Quantity-distance table, 11–4

Rail transport, 11–6
Ramming, 4–14
Reaction
  establishing self-propagating rate, 2–15
  kinetics, 2–2
  rate, 2–2
Reconsolidation, 10–10
References, 1–16, 2–27, 3–18, 4–17, 5–27, 6–11, 7–13, 8–8, 9–7, 10–18, 11–6, 12–22, R–1
Relay, 5–2
Reliability, 1–14, 12–1, 12–4
Resistivity of wire bridge, 5–10
Response time, 5–11
RF energy, 1–13, 4–16, 5–25
Rifle bullet test, 4–4, 4–12
Ring delay, 6–2
Rocket propellant, 2–6, 4–1

Safety, 1–12, 1–14, 11–2, 12–1
Safing and arming device, 1–12
Sand test, 12–18
Sealed delay, 6–1, 6–10
Sealing disk, 5–6
Secondary high explosive, 1–4, 2–7, 2–13, 2–24, 3–6, 4–2, 4–11, 5–14, 5–19, 7–2, 8–4, 9–2, 12–20
Seismic wave, 3–17
Sensitivity test, 2–21, 3–3, 10–14, 12–9
Sensitivity to initiation, 2–18, 2–22, 3–3, 4–3, 4–9, 5–6, 6–4, 7–4, 8–6, 10–14, 12–9
Sensitization, 4–9
Setback acceleration, 1–9, 4–4, 4–14, 12–10
Setforward acceleration, 4–14
Shaped charge, 3–17, 7–8
Sheet explosive, 9–6
Shipping, 11–5, 11–6
Shock
  temperature, 2–10
  through a bulkhead, 2–26
  transducer, 12–20
  tube, 2–19
  velocity, 3–4, 3–11
  wave, 2–9, 3–12
Sideways acceleration, 4–14
Simulation of aerodynamic heating, 4–8
Simulation of impact, 4–12
Slurry, 8–5, 10–4
Small-scale gap test, 3–4, 12–10
Smoke mixture, 8–4
Sound velocity, 2–10
Spark gap electric initiator, 5–15, 5–26
Spit-back system, 7–9
Spontaneous detonation, 2–26
Spotting charge, 5–26
Spurious electrical signal, 1–13, 4–16
Squib, 5–3, 5–15
Stab initiation, 2–21, 5–6, 6–1
Stab initiator, 4–8, 5–2, 5–6, 5–24, 12–16
Stability, 12–16
Stagnation temperature, 1–8, 2–10
Staircase technique, 12–7
Standardization, 1–15
Static detonator safety test, 12–22
Static electricity, 1–13, 2–24, 4–3, 4–16
Statistical test method, 12–1, 12–6
Steel dent test, 12–19
Stop and pressure loading, 10–6
Storage at high temperature, 4–2
Storing, 11–3
Streak camera record, 3–1
Strength of explosive, 1–10
Structural aspects, 1–10
Suitability, 10–13
Surveillance environment, 4–2
Switch, 9–1
Symbols, list, xviii
Systems approach to ammunition, 1–7

Tables, list, xvi
TBI, 2–26, 5–16
Temperature
  adiabatic compression, 2–20, 4–15
  cook-off, 4–6, 12–11
  decomposition, 2–2
  effect, 1–7, 4–2, 4–9, 6–4, 6–8
  explosion, 2–2, 2–21, 4–3, 12–10
  high, 4–2
  ignition, 2–2, 2–18
  low, 4–10
  military requirement, 4–1
  reaction rate effect, 2–2

INDEX (Con't.)

Temperature (continued)
  sensitization, 4–9
  shock, 2–10
  stagnation, 1–8, 2–10
  storage, 4–2
Test
  environment, 12–21
  evaluation considerations, 12–1
  explosive materials, 12–8
  input, 12–16
  output, 12–18
  safety and reliability procedures, 12–1
  statistical test methods, 12–6
Thermal decomposition, 2–1
Thermal detonability test, 12–13
Thermodynamic heat transfer, 2–5
Thermogravimetric analysis, 12–12
Through-bulkhead initiation, 2–26, 5–16
Transfer of detonation from one charge to another, 3–1, 12–18
Transition from deflagration to detonation, 2–1, 2–6
Transmission of hot gas, 2–19
Transmission of hot particles, 2–20
Trauzl test, 12–15
Truck transport, 11–6
Underground output effect, 3–17
Underwater output effect, 3–16, 12–15

Vacuum
  casting, 10–3
  pressing, 10–10
  stability, 4–3, 12–16
Varicomp technique, 12–18
Vehicular aspects, 1–7
Vented delay, 6–2, 6–10
Vibration, 4–16
Voltage sensitivity, 12–17

Warhead fragmentation, 3–16
Water detonation, 3–16
Water environment, 4–2
Wave shaping, 3–12, 4–5, 4–9
Wax gap test, 3–12, 4–3
Wire bridge
  bridging, 5–25
  EBW, 2–24, 5–13, 5–26
  initiation, 2–17
  material, 5–10, 5–14
  separation, 4–5

FOR THE COMMANDER:

OFFICIAL:

JOHN LYCAS
Colonel, GS
Chief, HQ Admin Mgt Ofc

JOSEPH W. PEZDIRTZ
Major General, USA
Chief of Staff

DISTRIBUTION:
Special

ENGINEERING DESIGN HANDBOOKS

Available to AMC activities, DOD agencies, and Government agencies from Letterkenny Army Depot, Chambersburg, PA 17201. Available to contractors and universities from National Technical Information Service (NTIS), Department of Commerce, Springfield, VA 22151 (UNCLASSIFIED HANDBOOKS ONLY).

No. AMCP 706-	Title
100	Design Guidance for Producibility
104	Value Engineering
106	Elements of Armament Engineering, Part One, Sources of Energy
107	Elements of Armament Engineering, Part Two, Ballistics
108	Elements of Armament Engineering, Part Three, Weapon Systems and Components
109	Tables of the Cumulative Binomial Probabilities
110	Experimental Statistics, Section 1, Basic Concepts and Analysis of Measurement Data
111	Experimental Statistics, Section 2, Analysis of Enumerative and Classificatory Data
112	Experimental Statistics, Section 3, Planning and Analysis of Comparative Experiments
113	Experimental Statistics, Section 4, Special Topics
114 **	Experimental Statistics, Section 5, Tables
115	Environmental Series, Part One, Basic Environmental Concepts
116	*Environmental Series, Part Two, Natural Environmental Factors
120	Criteria for Environmental Control of Mobile Systems
121	Packaging and Pack Engineering
123	Hydraulic Fluids
125 **	Electrical Wire and Cable
127 *	Infrared Military Systems, Part One
128(S)	Infrared Military Systems, Part Two (U)
130	Design for Air Transport and Airdrop of Materiel
132	*Maintenance Engineering
133	*Maintainability Enaineering Theory and Practice
134	Maintainability Guide for Design
135	Inventions, Patents, and Related Matters
136 **	Servomechanisms, Section 1, Theory
137	Servomechanisms, Section 2, Measurement and Signal Converters
138 **	Servomechanisms, Section 3, Amplification
139 **	Servomechanisms, Section 4, Power Elements and System Design
140	Trajectories, Differential Effects, and Data for Projectiles
150	Interior Ballistics of Guns
160(S)	Elements of Terminal Ballistics, Part One, Kill Mechanisms and Vulnerability (U)
161(S)	Elements of Terminal Ballistics, Part Two, Collection and Analysis of Data Concerning Targets (U)
162(SRD)	Elements of Terminal Ballistics, Part Three, Application to Missile and Space Targets (U)
165	Liquid-Filled Projectile Design
170(S)	Armor and Its Applications (U)
175	Solid Propellants. Part One
176(C)	Solid Propellants, Part Two (U)
177	Properties of Explosives of Military Interest
178(C)	+Properties of Explosives of Military Interest, Section 2 (U) (REPLACED BY -177)
179	Explosive Trains
180	Principles of Explosive Behavior
181	*Explosions in Air, Part One
182(S)	*Explosions in Air, Part Two (U)
185	Military Pyrotechnics, Part One, Theory and Application
186	Military Pyrotechnics, Part Two, Safety, Procedures and Glossary
187	Military Pyrotechnics, Part Three, Properties of Materials Used in Pyrotechnic Compositions
188	*Military Pyrotechnics, Part Four, Design of Ammunition for Pyrotechnic Effects
189	Military Pyrotechnics, Part Five, Bibliography
190	*Army Weapon System Analysis
191	System Analysis and Cost-Effectiveness
195	*Development Guide for Reliability, Part One, Introduction, Background, and Planning for Army Materiel Requirements
196	*Development Guide for Reliability, Part Two, Design for Reliability
197	*Development Guide for Reliability, Part Three, Reliability Prediction
198	*Development Guide for Reliability, Part Four, Reliability Measurement
199	*Development Guide for Reliability, Part Five, Contracting for Reliability
200	*Development Guide for Reliability, Part Six, Mathematical Appendix and Glossary

*UNDER PREPAMTION--not available
**REVISION UNDER PREPARATION
+OBSOLETE--out of stock

No. AMCP 706-	Title
201	*Helicopter Engineering, Part One, Preliminary Design
202	*Helicopter Engineering, Part Two, Detail Design
203	Helicopter Engineering, Part Three, Qualification Assuracce
204	*Helicopter Performance Testing
205	*Timing Systems and Components
210	Fuzes
211(C)	Fuzes, Proximity, Electrical, Part One (U)
212(S)	Fuzes, Proximity, Electrical, Part Two (U)
213(S)	Fuzes, Proximity, Electrical, Part Three (U)
214(S)	Fuzes, Proximity, Electrical, Part Four (U)
215(C)	Fuzes, Proximity, Electrical, Part Five (U)
235	Hardening Weapon Systems Against RF Energy
238	*Recoilless Rifle Weapon Systems
239	*Small Arms Weapon Systems
240(S)	Grenades (U)
242	Design for Control of Projectile Flight Characteristics (REPLACES -246)
244	Amnunition, Section 1, Artillery Ammunition--General, with Table of Contents, Glossary, and Index for Series
245(C)	Ammunition, Section 2, Design for Terminal Effects (U)
246	+Ammunition; Section 3, Design for Control of Flight Characteristics (REPLACED BY -242)
247	Ammunition, Section 4, Design for Projection
248	+Ammunition, Section 5, Inspection Aspects of Artillery Ammunition Design
249	Ammunition. Section 6, Manufacture of Metallic Components of Artillery Ammunition
250	Guns--General
251 **	Muzzle Devices
252	Gun Tubes
253	*Breech Mechanism Design
255	Spectral Characteristics of Muzzle Flash
260	Automatic Weapons
270	**Propellant Actuated Devices
280	Design of Aerodynamically Stabilized Free Rockets
281(SRD)	Weapon System Effectiveness (U)
282	+Propulsion and Propellants (REPLACED BY -285)
283	Aerodynamics
284(C)	Trajectories (U)
285	Elements of Aircraft and Missile Propulsion (REPLACES -282)
286	Structures
290(C)	Warheads--General (U)
291	Surface-to-Air Missiles. Part One, System Integration
292	Surface-to-Air Missiles, Part Two, Weapon Control
293	Surface-to-Air Missiles, Part Three, Computers
294(S)	Surface-to-Air Missiles, Part Four, Missile Armament (U)
295(S)	Surface-to-Air Missiles, Part Five, Countermeasures (U)
296	Surface-to-Air Missiles, Part Six, Structures and Power Sources
297(S)	Surface-to-Air Missiles, Part Seven, Sample Problem (U)
327	Fire Control Systems--General
329	Fire Control Computing Systems
331	Compensating Elements
335(SRD)	*Design Engineers' Nuclear Effects Manual, Volume I, Munitions and Weapon Systems (U)
336(SRD)	*Design Engineers' Nuclear Effects Manual, Volume II, Electronic Systems and Logistical Systems (U)
337(SRD)	*Design Engineers' Nuclear Effects Manual, Volume III, Nuclear Environment (U)
338(SRD)	*Design Engineers' Nuclear Effects Manual, Volume IV, Nuclear Effects (U)
340	Carriages and Mounts--General
341	Cradles
342	Recoil Systems
343	Top Carriages
344	Bottom Carriages
345	Equilibrators
346	Elevating Mechanisms
347	Traversing Mechanisms
350	Wheeled Amphibians
355	The Automotive Assembly
356	Automotive Suspensions
357	Automotive Bodies and Hulls
360	*Military Vehicle Electrical Systems
445	Sabot Technology Engineering

(continued)

No. AMCP 706-	Title
117	*Environmental Series, Part Three, Induced Environmental Factors
118	*Environmental Series, Part Four, Life Cycle Environments
119	*Environmental Series, Part Five, Glossary of Environmental Terms
124	*Reliable Military Electronics
126(S)	*Vulnerability of Communication-Electronic (C-E) Systems to Electronic Countermeasures (except Guided Missiles) (U)
129	*Electromagnetic Compatibility (EMC)
192	Computer Aided Design of Mechanical Systems
300	Fabric Design
361	*Military Vehicle Power Plant Cooling

☆ U.S. GOVERNMENT PRINTING OFFICE: 1974 O - 540-808 (6929A)