AD-775 705

FULLY PROCEDURALIZED JOB PERFORMANCE AIDS. VOLUME II. HANDBOOK FOR JPA DEVELOPERS

Reid P. Joyce, et al

Applied Science Associates, Incorporated

Prepared for:

Air Force Human Resources Laboratory

December 1973

DISTRIBUTED BY:

NTIS

National Technical Information Service
U. S. DEPARTMENT OF COMMERCE
5285 Port Royal Road, Springfield Va. 22151

NOTICE

When US Government drawings, specifications, or other data are used for any purpose other than a definitely related Government procurement operation, the Government thereby incurs no responsibility nor any obligation whatsoever, and the fact that the Government may have formulated, furnished, or in any way supplied the said drawings, specifications, or other data is not to be regarded by implication or otherwise, as in any manner licensing the holder or any other person or corporation, or conveying any rights or permission to manufacture, use, or sell any patented invention that may in any way be related thereto.

This final report was submitted by Applied Science Associates, Box 158, Valencia, Pennsylvania 16059, under contract F33615-73-C-4033, project 1710, with the Advanced Systems Division, Air Force Human Resources Laboratory (AFSC), Wright-Patterson Air Force Base, Ohio 45433. Mr. Robert C. Johnson was the Laboratory contract monitor.

This report has been reviewed and cleared for open publication and/or public release by the appropriate Office of Information (OI) in accordance with AFR 190-17 and DoDD 5230.9. There is no objection to unlimited distribution of this report to the public at large, or by DDC to the National Technical Information Service (NTIS).

This technical report has been reviewed and is approved.

GORDON A. ECKSTRAND, Director
Advanced Systems Division

Approved for publication.

HAROLD E. FISCHER, Colonel, USAF
Commander

Unclassified

SECURITY CLASSIFICATION OF THIS PAGE (When Data Entered)

AD-775 705

REPORT DOCUMENTATION PAGE

READ INSTRUCTIONS BEFORE COMPLETING FORM

1. REPORT NUMBER
AFHRL-TR-73-43(II)

2. GOVT ACCESSION NO.

3. RECIPIENT'S CATALOG NUMBER

4. TITLE (and Subtitle)
FULLY PROCEDURALIZED JOB PERFORMANCE AIDS: HANDBOOK FOR JPA DEVELOPERS

5. TYPE OF REPORT & PERIOD COVERED
Final 1 April - 31 August 1973

6. PERFORMING ORG. REPORT NUMBER

7. AUTHOR(s)
Reid P. Joyce
William J. Mallory
Andrew P. Chenzoff
Joseph F. Mulligan

8. CONTRACT OR GRANT NUMBER(s)
F33615-73-C-4033

9. PERFORMING ORGANIZATION NAME AND ADDRESS
Applied Science Associates
Box 158
Valencia, Pennsylvania 16059

10. PROGRAM ELEMENT, PROJECT, TASK AREA & WORK UNIT NUMBERS
62703F 17100422

11. CONTROLLING OFFICE NAME AND ADDRESS
HQ Air Force Human Resources Laboratory
Brooks Air Force Base, Texas 78235

12. REPORT DATE
December 1973

13. NUMBER OF PAGES
130

14. MONITORING AGENCY NAME & ADDRESS (if different from Controlling Office)
Advanced Systems Division
Wright-Patterson Air Force Base, Ohio 45433

15. SECURITY CLASS. (of this report)
Unclassified

15a. DECLASSIFICATION/DOWNGRADING SCHEDULE

16. DISTRIBUTION STATEMENT (of this Report)
Approved for public release; distribution unlimited.

17. DISTRIBUTION STATEMENT (of the abstract entered in Block 20, if different from Report)

18. SUPPLEMENTARY NOTES

19. KEY WORDS (Continue on reverse side if necessary and identify by block number)
job performance aids
technical data presentation
maintenance task analysis
training/technical data tradeoff
Fully Proceduralized Job Performance Aids
Fully Proceduralized Troubleshooting Aids

Reproduced by
NATIONAL TECHNICAL INFORMATION SERVICE
U S Department of Commerce
Springfield VA 22151

20. ABSTRACT (Continue on reverse side if necessary and identify by block number)

This volume provides guidance for the development of Fully Proceduralized Job Performance Aids (JPAs) for the organizational and intermediate maintenance of Air Force equipment. It contains detailed instructions to the contractor for preparing fully proceduralized JPAs in accordance with the Draft Specification (Volume I of this technical report). It includes instructions for performing the behavioral task analysis, for development of the Job Guides and Fully Proceduralized Troubleshooting Aids (FPTAs), and for insuring quality and accuracy assurance. The very important validation and verification activities are also thoroughly discussed. Personnel types and qualifications required for efficient development of JPAs are also included. In addition, this volume presents a strategy and guidance for developing supervised practice exercises designed to produce the skills required for

DD FORM 1 JAN 73 1473 EDITION OF 1 NOV 65 IS OBSOLETE

Unclassified

SECURITY CLASSIFICATION OF THIS PAGE (When Data Entered)

Item 20 (Continued):

preparing fully proceduralized JPAs.

ia

SUMMARY

PROBLEM:

A series of research efforts conducted by the Air Force Human Resources Laboratory has resulted in the development of a new type of maintenance data known as fully proceduralized Job Performance Aids (JPAs). Available evidence suggests that application of fully proceduralized JPAs to the maintenance of Air Force systems will significantly increase maintenance effectiveness. A well-defined technology has been developed for the preparation of fully proceduralized JPAs. This technology differs significantly from the techniques used to develop conventional technical orders. And, since relatively few JPAs have been developed, very few people have been trained in the technology. As a result, only a very limited capacity exists in the industry to produce fully proceduralized JPAs. A method was needed to increase this capacity.

APPROACH AND RESULTS:

As an approach to the problem, the materials presented in this three-volume technical report were developed to provide specifications and guidance for the development and procurement of fully proceduralized JPAs. Volume I provides a draft specification for the procurement of JPAs. Volume II provides guidance for JPA developers. Volume III provides guidance both for Air Force data managers charged with the responsibility for monitoring the procurement of JPAs, and for training specialists who design JPA-coordinated training.

This volume (Volume II) provides detailed instructions for preparing fully proceduralized JPAs in accordance with the requirements of the draft specification (Volume I). It provides instructions for performing the behavioral task analysis, preparing job guides, and developing fully proceduralized troubleshooting aids (FPTA). In addition, it provides a strategy and guidance for developing supervised practice exercises designed to produce the skills required to prepare fully proceduralized JPAs.

This Handbook for JPA Developers and the draft specification alone are not sufficient to ensure high quality job performance aids. Supervised practice in the preparation of intermediate products should be provided for those not skilled in such efforts.

PREFACE

This report represents a portion of the Exploratory Development program of the Advanced Systems Division of the Air Force Human Resources Laboratory. The report was prepared under Contract F33615-71-C-4033 by the Applied Science Associates, Inc., Valencia, Pennsylvania. Mr. Thomas K. Elliott was the Principal Investigator and Mr. Reid P. Joyce was the Project Director.

Identification of the effort by the Air Force was Work Unit 1710 04 22, "Consolidating and Updating Specifications and Handbooks for Developing Fully Proceduralized Job Performance Aids." The Task was 1710 04, "Job Performance Aids for Air Force Maintenance." The Project was 1710, "Training for Advanced Air Force Systems." When the effort was initiated, Dr. John P. Foley was the Work Unit Scientist and the Task Scientist. Soon after initiation, Mr. Robert Johnson assumed the duties of Work Unit Scientist and Mr. John Klesch assumed those of Task Scientist. Dr. Ross L. Morgan was the Project Scientist.

TABLE OF CONTENTS

Section		Page No.
I	INTRODUCTION	1-1
	Scope of the Handbook	1-1
	Purpose and Limitations of the Handbook	1-1
	Summary of the JPA Development Process	1-3
II	MAINTENANCE TASK ANALYSIS	2-1
	Basic Concepts	2-1
	Overview of the Task Analysis Process	2-3
	Recommended Personnel Qualifications	2-9
	Preliminary Task Identification Matrix (PTIM) (3.2.6)	2-10
	Analogous User Assessment (3.2.8)	2-14
	Modified User Description (3.2.9)	2-16
	JPA/Training, Trade-off Ground Rules (3.2.10)	2-17
	TIM Annotated for JPA/Training Trade-off (ATIM) (3.2.11)	2-19
	Validation of the ATIM	2-20
	Level of Detail Guide (3.2.12)	2-23
	Test Equipment and Tool Use Form (3.2.13)	2-25
	Preliminary Information Worksheets (3.2.14)	2-28
	Task Description and Information Index (3.2.15)	2-30
	Detailed Step Description Worksheets (3.2.16)	2-32
	Generalized Task List (3.2.17)	2-36
III	JOB GUIDE DEVELOPMENT	3-1
	Overview of Job Guide Development	3-1
	Recommended Personnel Qualifications	3-3
	Group Tasks Into Activities	3-3
	Assign Activities to Volumes	3-5
	Draft Index Volume	3-6
	Draft Front Matter for Each Volume	3-6
	Format Job Guide Activities	3-6
	Draft Maintenance Support Information Manual	3-8
	Contractor Review by Activity	3-15
	Job Guide Validation	3-17
IV	FULLY PROCEDURALIZED TROUBLESHOOTING AID DEVELOPMENT	4-1
	Overview	4-1
	Recommended Personnel Qualifications	4-1
	Develop List of Components and Failure Modes (LCFM) and List of Malfunction Symptoms	4-3
	Develop the Checkout Procedure	4-5
	Develop Action Trees	4-15
	Checkout and Action Tree Validation	4-19
V	QUALITY AND ACCURACY ASSURANCE	5-1
	Overview	5-1
	JPA Quality Assurance Plan	5-2
	Quality and Accuracy Assurance Organization	5-3
	Quality Control Responsibilities	5-5
	Technical Quality Control	5-13
	Production Quality Control	5-14
	Validation	5-16
	Verification	5-17
	APPENDIX A	A-1
	Guidelines For The Preparation of General Exercise Specifications	A-1
	General Exercise Specification	A-11
	APPENDIX B	B-1
	Suggested Task Step Description Style Guide	B-1
	INDEX	I-1

LIST OF ILLUSTRATIONS

Figure Number	Title	Page Number
1-1	JPA Development Process	1-4
2-1	Maintenance Task Analyses Development Process	2-4
2-2	Sample of Technical Data Identifying Test Equipment and Tools Used in Organizational Maintenance	2-26
2-3	Sample of Technical Data Identifying Supplies Data	2-29
2-4	Equipment Condition Information in a Technical Order	2-31
3-1	Job Guide Development Process	3-2
3-2	Maintenance Frame with Illustrations Too Large and Image Area Poorly Utilized	3-9
3-3	Maintenance Frame with Illustrations Too Small and Overcrowded Image Area	3-10
3-4	Maintenance Frame with Illustrations Proper Size and Image Area Well Utilized	3-11
3-5	Maintenance Frame with Illustrations Proper Size but Image Area Poorly Utilized	3-12
3-6	Maintenance Frame with Illustrations Proper Size and Image Area Well Utilized	3-13
3-7	Maintenance Frame with Illustrations Proper Size and Image Area Well Utilized	3-14
3-8	Review Outline	3-16
4-1	FPTA Development Process	4-2
4-2	Format for Failure Mode Analysis	4-4
4-3	Mechanical System for Illustrative Purposes	4-6
4-4	Sample Failure Mode Analysis	4-7
4-5	Sample Failure Mode Analysis Continued	4-8
4-6	Hardware Item Flow Diagram, For Illustrative Purposes	4-10
4-7	Failure Mode Analysis for Illustrative Purposes	4-12
4-8	List of Malfunction Symptoms	4-13
4-9	Checkout Procedure for Illustrative Purposes	4-14
4-10	Action Tree for Illustrative Purposes	4-18
5-1	The QA Review Evaluation Guide	5-7

SECTION I

INTRODUCTION

1.1 Scope of the Handbook

This handbook covers the preparation of the task analysis and of the two major types of fully proceduralized Job Performance Aids (JPAs) in accordance with the requirements of the draft specification contained in Volume I of this technical report. The two major types of JPAs are Job Guides and Fully Proceduralized Troubleshooting Aids (FPTA).

Job Guides provide instructions for fixed-procedure tasks such as adjustment, removal and installation, and repair. The instructions are presented in a step-by-step format and are supported by detailed illustrations.

Fully Proceduralized Troubleshooting Aids provide instructions for troubleshooting tasks in a step-by-step format. The step-by-step instructions are presented in a "scrambled-book" form which provides the technician with the steps to follow to isolate malfunctions to replaceable or repairable units.

The procedures described in this handbook are built around the requirements of the draft specification. Therefore, the user of this handbook should be thoroughly familiar with the requirements of the specification and should have a copy available for reference. JPA developers will also find the information provided in the JPA Manager's Handbook (Volume III of this Technical Report) useful since it describes the procedures to be used in reviewing and evaluating the JPAs produced.

1.2 Purpose and Limitations of the Handbook

This handbook is intended to assist in development of JPAs in accordance with the requirements of the draft specification. The handbook provides guidance to its user. It does not reduce the development of JPAs to a clerical task, although many relevant procedural and format aids are given. It does not necessarily enable persons who have never developed these types of JPAs before to do an effective job by merely following the procedures outlined in the handbook. The task is not that simple. Certain qualifications are required to prepare effective job performance aids that can enhance maintenance effectiveness. It is possible to prepare JPAs that meet only the superficial criteria of format and identifiable types of content, but which would lead to ineffective maintenance. If JPAs are prepared by individuals without

the required qualifications, such a result is likely. The kinds of qualifications that have been found to be suitable are suggested in the handbook.

Generally speaking, the handbook is intended for use by persons and organizations with substantial capability in producing conventional technical orders. It therefore emphasizes the unique requirements for development of the fully proceduralized job performance aids called out in the draft specification. Relatively little attention is given to graphic arts techniques and to general management and administrative matters. Capability is assumed in these areas. On the other hand, it should not be assumed that expert capability in developing conventional TOs is sufficient to permit effective development of fully proceduralized JPAs without substantial practice.

It is anticipated that organizations which prepare JPAs for the first time will have difficulty obtaining personnel with the recommended skills and abilities. Such capability will not exist in the work force for some time because so few JPAs have been prepared. If the capability cannot be hired, it must be trained. And because of the sizable difference between preparing JPAs and preparing conventional technical data (it is assumed that those currently employed in preparing technical data will be the ones who will ultimately prepare JPAs), the training problem must not be taken lightly. Although the specification and handbook do provide procedures and guidance for preparing JPAs they do not provide an opportunity to practice and obtain additional skills required to produce effective JPAs.

As an attack on this problem, Appendix A provides a strategy and specific guidance in development of supervised practice exercises designed to produce the skills required to perform the operations which are described in the handbook. Example practice exercises and supporting materials are provided, and the specific JPA development skills in which training will be required are identified. This Appendix is not, however, a course. Considerable development will be required to produce one from the guidance provided. Therefore, the Appendix is addressed to a different audience, perhaps, than the remainder of the handbook; namely, training developers rather than technical data developers.

The handbook describes all development processes as though they are to be performed only once, from beginning to end straight through, and in neat sequence. The descriptions and explanations are presented in this way for clarity. In practice, many iterations and revisions of steps may be required. Several developmental steps may be in process at one time. Updating is, of course, a recycling process that can be treated as separate from the initial development process.

The process of "Task Analysis" has been separated from preparation of the JPAs. Task analysis consists primarily of locating and assembling in proper form the essential data about fixed-procedure tasks.

Preparation of the JPAs for these tasks consists mainly of converting the information in the data base to the proper JPA format. The form in which at least some of the basic task analysis data are stored has, therefore, been influenced by specific JPA format requirements. The task analysis intermediate products for Job Guides contain information useful to a training specialist and are presented in a form that can be considered rough draft Job Guide. A new feature of the revised specification (Volume I of this Technical Report) with which this handbook deals is the addition to the Task Analysis section of:

a) A careful description of the JPA user, aimed toward helping the analyst to select an appropriate level of writing detail.

b) A series of interactions between JPA developers and training developers, aimed toward ensuring complete and adequate support of the technician by the combination of JPAs and training--i.e., ensuring that nothing "falls through the cracks."

Troubleshooting aids are a special case. The task analysis almost always requires creation of the tasks. In the fully proceduralized aids, the task analyst must literally solve all of the troubleshooting problems that the maintenance technician is likely to encounter. These solutions are documented in the form of action trees and result in the description of branched-procedure tasks. Development of the action trees is described in Chapter 4 on Fully Proceduralized Troubleshooting Aids, although it could just as easily been called "task analysis" and put in that section.

The specification calls out a number of forms that are used in collecting and storing data and in presenting intermediate products for review by the Procuring Agency. Other forms are suggested in the handbook to assist in the development process. Throughout this handbook it is assumed that the blank forms will be prepared when needed for the various steps in the JPA development process. The preparation of forms, therefore, is generally not included in the description of the JPA development process in the handbooks.

1.3 Summary of the JPA Development Process

Development of the JPAs in accordance with the draft specification has several salient features that differ in degree or in kind from development of conventional technical orders.

The overall process of developing advanced-type job performance aids is shown in Figure 1-1. The process begins with development of a data base through a process called "Task Analysis," which consists of several identifiable components. The first is preparation of a Preliminary Task Identification Matrix (PTIM). The PTIM is a matrix of all equipment end items maintainable at the maintenance levels under consideration (organizational and/or intermediate) versus possible kinds

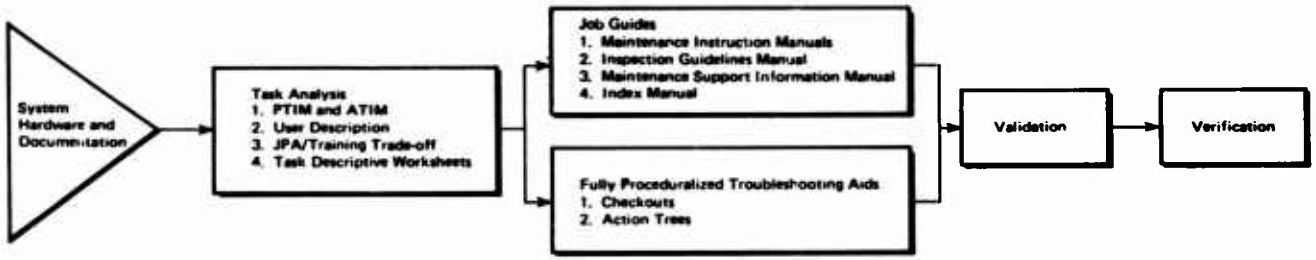

Figure 1-1. JPA Development Process

of maintenance tasks. Cell entries in the matrix identify all of the theoretical possibilities for tasks and indicate the level of maintenance at which each task is performed.

Next the expected user of the JPA is carefully described in terms that will help writers to gauge the appropriate level of detail of written instructions.

Following the development of the JPA user description, the JPA developer and the training developer jointly establish rules for deciding whether various tasks in the PTIM require JPA coverage, training coverage, or both (the "JPA/Training trade-off"). The PTIM is then annotated to indicate how every identified task is to be treated. The resulting product is called the "TIM Annotated for JPA/Training Trade-off" (ATIM).

Finally a series of task descriptive worksheets is filled out for every task identified as requiring JPA coverage. The analyst uses all information resources at his disposal (including existing documentation, interviews with engineers or maintenance personnel, and the hardware itself) to develop, in effect, drafts of job guide tasks.

Job guide preparation follows and is based entirely on the task descriptive worksheets prepared for each task. Tasks are grouped into activities, assigned to volumes, and the text and illustrations from the task descriptive worksheets are arranged in job guide format.

Fully proceduralized troubleshooting aid development also depends on the TIM and the JPA user description from the task analysis. Further FPTA development requires considerable technical expertise in applying troubleshooting strategies and in knowledge about the particular equipment system involved. Checkout procedures are devised to "exercise" the hardware and give it an opportunity to display every observable malfunction symptom. A troubleshooting procedure is then prepared for each symptom to isolate the malfunctioning component. The checkout procedures and troubleshooting procedures are then prepared in a format identical to that used for Job Guides.

SECTION II

MAINTENANCE TASK ANALYSIS

2.1 Basic Concepts

2.1.1 The Importance and Difficulty of Task Analysis. The function served by JPAs is to provide detailed work guidance and the necessary support (reference) information to maintenance technicians in the field. A major contribution of JPA resides in its rational, systematic, task analytic foundation. The more complete, accurate, and understandable the task analysis, the more useful is the JPA.

To prepare JPAs which present optimal work methods requires a careful analysis of tasks to identify and describe what the man perceives and what he should do. There are procedures for making this analysis, but the procedures by themselves do not ensure that an effective set of steps will be clearly described. The procedures focus the attention of the task analyst on small steps, *but it is the analyst who must communicate a set of steps that will permit the technician to achieve task goals.*

The difficulties in doing task analyses are not in following the prescribed procedures; they are in the resistance the task analyst encounters in gaining access to equipment, getting permission to have equipment disassembled, and forcing himself to require detailed graphics and to make detailed descriptions when grosser descriptions might superficially appear to be adequate.

Furthermore, the process of task analysis is not so much following a procedure as it is determining how the job is performed by those who use the most efficient procedures and describing these methods. The more completely the analyst understands what he reads about the job, what he is told, and what he observes, the better is the analysis. The analyst will find that most tasks can be performed in several ways and that much task relevant information can be interpreted in more than one way. However, he must constantly concentrate upon determining the methods that work best in the field and upon communicating those methods in sufficient detail to guarantee effective task performance.

The difficulties that a task analyst encounters and solves in this process are the very difficulties that men in the field would encounter and have to solve many times over if the task analyst had not done it once and produced a JPA designed to avoid those problems.

In the preparation of fully proceduralized troubleshooting aids, the process of task analysis is largely a matter of defining and designing the maintenance tasks. In those cases, task analysis becomes more of a technical/engineering/analytic effort than a writing effort. This is true even when working from existing conventional Technical Orders or Technical Manuals, since they may not contain much of the information required for JPAs.

Conventional technical manuals are directed to an audience presumed to be generally more sophisticated in relevant technology and more familiar with the subject equipment than is presumed in the case of the typical JPA user. Furthermore, the major emphasis of conventional technical manuals is on description of the subject equipment. The focus of JPAs is on instructions for the tasks the user must perform. JPAs include equipment descriptive information only in the places and to the extent required in connection with performance of particular steps in particular tasks. As a result, the task descriptive information not found in the technical manuals must be developed, the detail of that which the manuals do contain must frequently be increased, and the point of view of the equipment descriptive information must be modified to serve the needs of the prospective users. All of this must be done within the task analysis phases of the JPA development process.

Task analysts are never able to develop adequate JPA job guide materials from technical manuals alone. Heavy reliance must be placed on direct interaction with the equipment itself by analysts capable of "putting themselves in the place of the user," on direct observation of "hands-on" task performance, and on interviews with task performers.

2.1.2 Level of Detail. A persistent question in task analysis is: "To what level of detail should tasks be analyzed?" The answer, of course, depends upon the intended use of the end product. In doing task analysis in support of JPA development, the level of detail required in the task analysis depends mainly on the level of capability of the intended user of the resulting JPA.

Specific assumptions must be made about the capabilities, skills, and knowledges possessed by the user of the JPA. The JPA contractor and the Procuring Agency determine the level of capability, skill, and knowledge to which the JPA will be aimed. This decision has significant effects on the kind and level of detail of task analysis data that must be collected. For example, if it can be assumed that the users will have adequate capability in the use of common hand tools, then the JPA need not contain instructions on how to use them. Consequently, the task data need only indicate that common hand tools are required in a given task. On the other hand, if it must be assumed that the JPA users will not know how to use an oscilloscope, for example, then the JPA must contain adequate directions for the operation of the oscilloscope in each specific task. This information must, therefore, be obtained during task analysis, and included as part of the task description data each time use of the oscilloscope is required in a task.

It must be remembered that if the capabilities of the JPA user are overestimated, the users will not be able to follow the instructions in the JPA. If the instructions merely state "Check the waveform at Pin 21001," and the technician does not know where Pin 21001 is, what the waveform should be, how to check it, or what the equipment state should be before making this check, he cannot perform this task. It is better to err on the safe side and include more information than may be necessary in the JPA and, therefore, in the task analysis data base.

This does not mean, however, that a fine level of description is the ideal. Too much detail in a JPA slows down task performance. It can also increase errors in performance because the user may tend to avoid using the JPA if it forces him to wade through a lot of detail. In the worst case, the JPA will be rejected altogether by the intended user, with potentially disastrous effects on maintenance. Arriving at the proper level for the JPA instructions, and therefore the proper level for task analysis, is difficult.

Before the task analyst can write step descriptions that will communicate with the intended user of JPA, he needs to know something about that user. This is the reason that the JPA development process requires an user description to be prepared and verified. This description is stated in terms of aptitudes, experience, and the job relevant skills and knowledges assumed to be possessed after training. On the basis of this description of the JPA target user characteristics, a set of ground rules is developed, stating how much and what kind of detail needs to be provided when various types of task actions are described.

2.1.3 Ensuring Complete Coverage. Fully proceduralized JPAs need to contain sufficient instructions to permit a graduate of the appropriate course of training to perform every task the maintenance man may have to perform on the job. One problem is to ensure that all tasks are considered, and that none are unintentionally omitted from the task analysis (and, therefore, from the JPA). The basic tool for preventing such omissions is the Preliminary Task Identification Matrix. Development of this document is really a precursor to the in-depth analysis of individual tasks, but is included under the overall heading of "task analysis" for convenience.

The PTIM identifies all organizational- and intermediate-level tasks that are theoretically possible on the system. Those tasks that are not actually to be performed are eliminated, leaving a list of tasks that must be performed, and for which JPAs must be prepared.

2.2 Overview of the Task Analysis Process

2.2.1 The Process. The task analysis process (depicted in Figure 2-1) begins with the preparation of a Preliminary Task Identification Matrix (PTIM). The PTIM shows each maintenance function that needs to be performed on each equipment item in the system. It depicts the total set

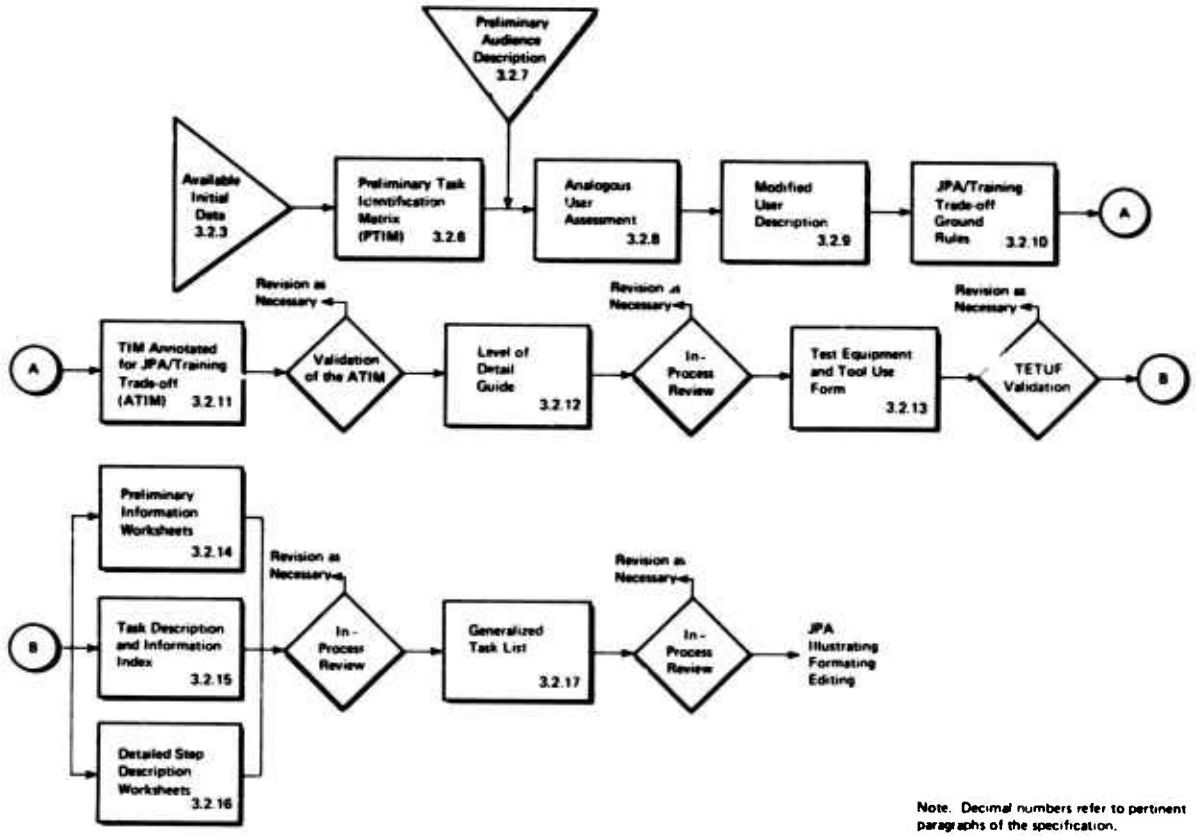

Figure 2-1. Maintenance Task Analyses Development Process

of maintenance tasks that can be performed in the system and the level of maintenance at which each task is performed. The purpose of the PTIM is to present for consideration a complete picture of the tasks that might have to be described by JPAs.

Some subset of these tasks is chosen for coverage by JPAs. Whenever a maintenance manual is written, some tasks are covered and others are omitted from coverage. The PTIM assures that all system tasks are explicitly considered, and that none is inadvertently omitted.

When the PTIM is annotated for JPA/Training trade-off, decisions are made concerning which tasks need to be described in JPAs and which do not. Tasks may be excluded from JPA coverage on the basis that they will be completely mastered during training or that they are already known (or can be very quickly acquired on the job) by personnel of the type who will maintain the equipment. But we are getting ahead of the process sequence.

In order to determine the type of personnel who will be assigned to maintain the equipment (the intended users of the JPAs), a three-stage process has been set up. First, the Procuring Agency supplies a Preliminary User Description (PUD) which covers the aptitudes, experience, and task relevant skills and knowledges that will be available in the intended JPA users. This document (PUD) reveals the assumptions made about the types of individuals who will be assigned to the subject system, what they will know and be capable of doing before and after training. Second, a representative of the Air Training Command and a representative of the JPA contractor observe and describe a population of maintenance technicians analogous to the intended JPA Users. Third, any differences between the Preliminary User Description and the findings of the Analogous User Assessment are considered and resolved.

At this point, having learned in general what the maintenance technicians will be called upon to do and what they will be capable of doing, a set of JPA/Training Trade-off Ground Rules are formulated. This document consists of a set of policy statements stating which kinds of tasks will be described in the maintenance manuals (JPAs) and which will not.

Both training and JPAs exist for the purpose of facilitating task performance. In performing a task, a maintenance technician needs to know what to do next, where to do it, how to do it; and in addition he needs certain basic skills and reference information. All of these necessary factors can be provided through training, but it is seldom economical to do so because of the complexity of modern equipment systems. Therefore, some are provided at the work site through the medium of JPA. The set of decisions concerning which aspects of the task are to be covered by training, which by JPA, and which by both is collectively called the "JPA/Training trade-off."

Once the JPA/Training Trade-off Ground Rules are agreed upon, the next step is to apply these rules to the specific equipment items in the system. The result of this process is reflected in the TIM Annotated for JPA/Training Trade-off (ATIM).

The next stage of the process involves the preparation of two documents that establish how much the JPA will tell its users about their tasks. One of these documents is the Level of Detail Guide, which indicates the kind of information that needs to be provided about the various types of activities found in typical maintenance tasks. The second is the Test Equipment and Tool Use Form, which establishes the level of detail of procedural instructions and task step details that need to be included for each item of test equipment and special tools. The latter form also indicates what training coverage needs to be provided for test equipment and special tools.

Three kinds of worksheets are next prepared on those tasks for which JPAs will be written. They establish task preconditions, describe the tasks, and list the task steps. The task steps are written in accordance with the level-of-detail guidance found in the Level of Detail Guide and the Test Equipment and Tool Use Form. Thus these task descriptive worksheets are, in essence, drafts of the Job Guides that will ultimately be produced.

The last intermediate task analytic product to be prepared is the Generalized Task List. This document groups those tasks that can be described with the same set of steps.

2.2.2 General Data Sources. The sources of data for the task analysis will consist of written documentation and information which is obtained from interviews with, and observation of maintenance activities by, vendor and user personnel. If the task analysis is being performed for a system still under development, the initial stages of the analysis will be similar to the process currently used in development of conventional technical data. The analyst will have to depend heavily on engineering data and interviews with designers; he may even participate in equipment design decisions. But unlike the writer of conventional technical data, he cannot be satisfied with hardware descriptions. He cannot complete his analysis until he has complete and accurate descriptions of tasks. The design of individual hardware items, the overall system design, the maintenance philosophy--all must be complete enough to permit detailed task descriptions before the task analysis can be completed.

The system documentation available for the preparation of maintenance task analyses may vary among systems. In all cases, the Task Analyst should obtain the most recent issues of system documents.

2.2.3 Data Available for New Air Force Systems. Air Force systems engineering management procedures require that the following types of documentation be prepared for each new system:

a. Maintenance Engineering Analysis Record (MEAR)--A comprehensive set of worksheets that establish maintenance procedures at each maintenance level and the optimum mix of logistic support resources and capabilities.

b. Group Assembly Parts List (GAPL)--Contains a complete breakdown, in disassembly sequence, of units and assemblies within the equipment systems. The Numerical Index of the GAPL is extremely helpful when it records the provisioning decisions that have been made.

c. Functional Flow Block Diagram--Identifies and sequences the system element functions that must be accomplished in order to achieve system/project objectives.

d. Requirement Allocation Sheet (RAS)--Defines the requirements and constraints pertaining to each of the flow diagram functions and apportions these requirements to equipment, facilities, personnel, and procedural data.

e. Trade-off Study Report--Documents the trade-offs and backup rationale pertaining to the functional diagram and requirements developed on the RAS, design sheet, schematic, time line sheets and other system engineering documentation.

f. Time Line Sheet--Presents system functions against a time base in their required sequence of accomplishment.

g. Schematic Block Diagram--Schematically identifies and represents hardware, computer programs, and facility subsystem/end item/component functional interfaces and interrelationships.

h. Design Sheet--Identifies hardware, computer program, and facility end item performance design requirements.

i. Facility Interface Sheet--Identifies functional and physical interfaces between equipment and facilities on an end item basis.

j. End Item Maintenance Sheet (Manual)--Summarizes maintenance requirements on a specific end item, subassembly, and component basis.

k. Maintenance Sheets (Automated)--Summarizes maintenance requirements on a specific end item, subassembly and component basis. Provides data for configuration management, computer program and detail maintenance data elements. May be modified for manual use.

l. Maintenance Loading Sheet--Correlates Maintenance functions and task (including frequency of occurrence, time for accomplishment, etc.) with personnel, aerospace ground equipment (AGE), and spares.

m. Maintenance Ground Equipment (MGE) and Aerospace Ground Equipment (AGE) Requirements Documents--Identify quantity of ground equipment by specific use location.

n. Personnel Utilization Sheet--Identifies maintenance personnel effort by specific maintenance location.

o. Calibration Requirements Summary--Summarizes equipment calibration requirements at each echelon of calibration.

p. Optimum Repair Level Analysis (ORLA)--Determines whether each equipment item should be discarded or repaired and whether repair should be at the depot, intermediate or organizational level.

2.2.4 Data Available for Existing Air Force Systems. The following types of system documentation should be available for existing Air Force systems:

a. Technical Orders (T.O.s) and Technical Manuals (T.M.s)
b. Engineering Reports
c. Standard Operating Procedures (SOPs)
d. End Item Parts Inventories
e. Special Tools and Test Equipment Manuals
f. Illustrated Parts Breakdown (IPB)
g. Other drawings; e.g., photographs, engineering drawings, etc.

2.2.5 System Modifications. Hardware end items are often modified during the operational life of the system. Operational and maintenance philosophies may also change. Hence, changes are required in the JPAs to reflect these modifications. These modifications are documented by the Air Force in Time Compliance Technical Orders (TCTOs).

2.2.6 Interviews and Observations. When JPAs are to be prepared for systems already in existence, the task analyst has the advantage of being able to observe and interrogate experienced maintenance technicians on the job. Such data sources are extremely important for the verification of any documented data on maintenance procedures, and for collection of data on tasks for which no written documentation exists.

2.2.7 Other Data Sources. Task analyses may have been prepared to serve the needs of personnel subsystem development efforts. The task analyst is, therefore, advised to check with the System Project Office (SPO) responsible for the system for which JPAs are being prepared to

determine if additional documentation is available. Such personnel subsystem documentation requirements are described in the following specifications, regulations, standards, and handbooks:

DH 1-3, Personnel Subsystem

MIL-D-262339A, Data, Qualitative and Quantitative Personnel Requirements Information

MIL-STD-1472, Human Engineering Design Criteria for Military Systems, Equipment, and Facilities

2.3 Recommended Personnel Qualifications

The following personnel types are recommended for all intermediate products in Section II.

2.3.1 Task Analyst. The preparation of maintenance task analyses requires persons who are highly skilled in identifying the behaviors comprising satisfactorily performed tasks. They must be able to identify critical discriminations, decisions, contingencies, and responses required of the task performer, and document this information in the form of instructions which may be followed with a minimum of error. This requires that the task analysts have considerable knowledge of the users of the instructions so that they can safely omit from documentation detailed description of those behaviors which are within the capabilities of the users. Further, they must be fully familiar with electronic and mechanical systems, their nomenclature and their functions. The task analysts must also be resourceful in ferreting out the data required by task analyses-data which may exist in wide variety of forms and locations--and must be able to synthesize tasks when documentary data about them does not exist.

The task analysts who collect and process the task data for JPA preparation should have, as a minimum, the equivalent of a Bachelor's degree in some field of applied psychology, such as human engineering or education. In addition, they should have a strong background in some field of engineering, or one (1) year or more experience as a technician. The preparation of most JPA packages will require more than one task analyst to handle the large amounts of data and it is advisable for at least one of these persons to have performed task analyses for other systems.

2.3.2 Data Collection Assistant. Since the collection, processing, and formatting of task data can be standardized to a large extent, the task analyst can be assisted by one or more assistants. Data collection assistants should have at least two years of college and at least one year of experience in behavioral task analysis. Experience with electronic and mechanical systems will be most helpful. Typical "technical writers" are likely to be ideally suited for this work.

In subsequent paragraphs each intermediate product is considered in turn and guidance is provided for its preparation. The decimal numbers that follows the name of each intermediate task analytic product refers to the major paragraph of the specification where that intermediate product is treated.

2.4 Preliminary Task Identification Matrix (PTIM) (3.2.6)

2.4.1 Recommended Personnel Types. Task Analyst, Data Collection Assistant.

2.4.2 Overview of the Preliminary Task Identification Matrix. The Preliminary Task Identification Matrix (PTIM) is a device for identifying all maintenance tasks that are theoretically possible in the subject system.

The PTIM is a "first-cut" statement of the total set of maintenance tasks that are performed on the system, and the level of maintenance at which each is performed. Between the time the PTIM is created and the time it is annotated for the JPA/Training trade-off and submitted for approval, any necessary changes do not require approval from the Procuring Agency.

The headings across the top of the matrix (column headings) are the maintenance functions specified in 3.2.6.6 of the draft specification. These terms are as defined in 6.2 of the draft specification. The headings down the side of the matrix (row headings) consist of the names and reference designators of all systems, assemblies, and subassemblies which can be disassembled, replaced, and repaired in the end article. The reference designators are unique identifiers which distinguish various identical equipment items in terms of their location and function within a system. For many systems, reference designators are set forth in schematic diagrams. The intersection of each row and column defines a theoretically possible task. The cell entries indicate the actual tasks performed on each hardware item and the maintenance level at which each task is performed.

2.4.3 "Found in Troubleshooting" Column. For each troubleshooting task that is identified, some number of subordinate hardware items have check marks entered in the "Found in Troubleshooting" column. These check marks indicate the components that can cause an equipment malfunction, and that can be found to be malfunctioning when the troubleshooting routine is applied to the next higher assembly in the top-down breakdown. Not all component items will have a check in the "Found in Troubleshooting" column. Guidance from the Procuring Agency will be provided concerning classes of items that need not be found in troubleshooting. For the most part, these will be items whose failure cannot conceivably disrupt the normal system data flow (using "data flow" in its broadest sense) or items so numerous and reliable that the preparation of troubleshooting routines to cover such malfunctions would not be economically feasible.

2.4.4 "Code" Columns. The code columns are intended to show relationship and subordination, in the manner specified in MIL-M-008910A(AS), except that physical indentation will not be used. No effort should be made to assign the same number of code numbers to similar items in different subsystems. For example, not all attaching parts will have the same number of filled code columns.

2.4.5 The Body of the Matrix. The matrix cell entries, made in the upper left half of each matrix cell, indicate the presence of tasks and the maintenance level at which these tasks are performed. The following codes are used, as appropriate:

— - (dash) no maintenance task of this type is performed on this hardware item

O - a maintenance task of this type is performed at the organizational level

I - a maintenance task of this type is performed at the intermediate level

D - a maintenance task of this type is performed at the depot level

The levels of maintenance for which the code letters stand are defined as follows:

Organizational maintenance is that maintenance which is the responsibility of, and performed by, a using organization on its assigned equipment. Its phases normally consist of inspecting, servicing, lubricating, adjusting, and the replacement of parts, assemblies, and subassemblies.

Intermediate maintenance is that maintenance which is the responsibility of and performed by designated maintenance activities for direct and general support of using organizations. Its phases normally consist of calibration, repair or replacement of damaged or unserviceable parts, units or assemblies or subassemblies; the emergency manufacture of non-available parts; and providing technical assistance to using organizations. Intermediate maintenance is normally accomplished in fixed or mobile shops.

Depot maintenance is that maintenance which is the responsibility of and performed by designated maintenance activities, to augment stocks of serviceable material, and to support organizational and intermediate maintenance activities by the use of more extensive shop facilities, equipment and personnel of higher technical skill than are available at the other levels of maintenance. Its phases normally consist of repair, modification, alteration, modernization, overhaul, reclamation, or rebuilding of

parts, assemblies, subassemblies, units and equipment (end items); the emergency manufacture of nonavailable parts; and providing technical assistance to using activities and intermediate maintenance organizations. Depot maintenance is normally accomplished in a permanent maintenance installation.

2.4.6 Identifying Hardware Items for the PTIM. Omission of any hardware item from the PTIM can result in omission of one or more tasks from the data base, and hence from the JPAs. It is, therefore, critical that the list of hardware items be prepared with great care.

2.4.7 Inputs

a. Group Assembly Parts Lists, Numerical Indexes, and the SM&R Codes therein contained.

b. Optimum Repair Level Analysis.

c. Level of Repair Analysis in compliance with MIL-STD-1390(NAVY).

d. Provisioning List.

e. End Item Maintenance Sheets or Maintenance Sheets system documentation.

f. Technical Orders for the system may reflect a more recent, more operational philosophy about the hardware items on which organizational level maintenance is performed.

2.4.8 Process of Determining Cell Entries. The foundation for the level of repair entries in the PTIM will be a set of SM&R (Source, Maintenance, and Recoverability) codes found in inputs a through d above. These codes are used to identify the source of spares, repair parts, and items of support equipment, and the levels of maintenance authorized to maintain, overhaul, or condemn them. The codes are assigned at provisioning conferences. They conform with the Logistic Support Plan for the end article.

The task analyst will be most vitally interested in the maintenance codes of the SM&R codes. The maintenance codes indicate the lowest maintenance level authorized to:

a. Remove and replace the item.
b. Repair the item.
c. Condemn the item.

When the maintenance code indicates that an item is removed and replaced at a given level, that same level is entered in the corresponding cell of the Remove/Install column of the PTIM. When a maintenance code indicates that an item is repaired at a given level, that same level is

entered in the corresponding cell of the PTIM. However, the analyst should be alert to the possibility that the definition of "repair" used during the provisioning conferences was somewhat different from the definition used in the JPA specification. The definition of "repair" that appears in the verb list of the JPA specification is as follows: "To restore an equipment item to operable condition by means other than total replacement of a part... In accomplishing repair, no items are drawn from supply except consumables, attaching parts, or reinforcing parts."

For each item checked in the "Found in Troubleshooting" column, there will be a Remove/Install task and a Checkout/Troubleshooting task for the next higher assembly.

The preponderance of tasks associated with an equipment system are typically revealed by the SM&R codes. Aside from those tasks identified by the SM&R codes, the others are identified through existing equipment description or task descriptive data, in combination with the analysts' experience with similar equipment items.

The process by which this is done cannot be fully specified, and requires many judgments to be made. A strategy that might be employed is:

a. Fill in all the cells where tasks are known. Reference to the data sources cited earlier will identify many of these tasks. Comparison with other, similar equipment may suggest other tasks that should be performed.

b. A search for apparent internal inconsistencies may identify other tasks. Deviations from common practice may also identify otherwise overlooked tasks--for example, a gear box or bearing with no "lubricate" task, or an IF strip with no "align" task.

c. After these entries have been made, those cells can be marked where it is known that no task will be performed. An example of such a cell might be "align the airframe."

d. At this point some cells may remain with no entries. Presumably these cells represent theoretically possible tasks, but no information has been found to support designating a task in them. An attempt should be made to find reasons why each of these cells represents a nontask intersection. If a sufficient rationale can be developed, then the cell to which it applies should be appropriately marked.

One reason for a nontask condition for a given hardware item is that a certain type of task is performed on that item as an integral part of that type of task performed on the next higher assembly. For example, it may be that the IF strip is never replaced by itself. It

is, rather, replaced when the receiver in which it is found is replaced. This depends upon the maintenance concept that has been adopted.

Similarly, a nontask situation may exist because a particular type of task is not performed on a given hardware item itself, but upon its components. That type of task on that hardware item is made up of the collection of the same kind of task on those components. For example, a total engine might never be "adjusted," so that the intersection of "engine" and "adjust" would not define a task. The adjustment of the engine is made up of adjust tasks on lower-level components that make up the engine, such as fuel pump or oil pressure regulator.

2.4.9 Update of the PTIM. Since subsystems are frequently modified after they become operational, it may occasionally be necessary to update the affected portions of the matrix.

For Air Force systems, modifications to equipment will be flagged by Time Compliance Technical Orders (TCTOs). These should be made available by the Procuring Agency to the JPA Contractor who is responsible for updating the JPAs.

All hardware items affected by a change order should be located on the PTIM, and the change order's effect on each cell for each item should be assessed by cycling through the process described in the above paragraphs.

2.5 Analogous User Assessment (3.2.8)

2.5.1 Recommended Personnel Types. Task Analyst, Data Collection Assistant.

2.5.2 Overview of the Analogous User Assessment. The Procuring Agency will provide the JPA contractor with a Preliminary User Description (PUD). The PUD is a statement of the type of maintenance technician who will be working on the subject system. It describes the technician who will be the prime target user of the JPAs in terms of his aptitudes, experience, and job related skills and knowledges. At the same time, the Procuring Agency will specify an existing military population that is most analogous to the users of the JPAs to be written.

An assessment team, consisting of a representative of the Air Training Command (ATC) and a representative of the JPA contractor will visit the analogous population and will perform the Analogous User Assessment. In essence, this assessment consists of collecting sufficient data to permit description of the analogous population in terms of the same dimensions used in the PUD (the dimensions listed in 3.2.7 of the specification).

The purpose for conducting the Analogous User Assessment is twofold. In the first place, it tests the reality and internal consistency of the PUD. It answers such questions as: "Can there be an

actual population such as that described in the PUD" and "Is it possible for a population with the aptitude and experience profile shown in the PUD to know as much (or as little) about their job as the PUD states that they know." Secondly, the process creates two experts in the properties of the user population--one who can help in JPA preparation and another who can help in designing the appropriate training.

2.5.3 Process of Conducting the Analogous User Assessment. The sources of information for the Analogous User Assessment are primarily three:

- Service records
- Interviews with technicians and their supervisors
- Direct observation of technicians at work

Service Records--Before visiting the analogous population of technicians, the assessment team should obtain or prepare a statistical description of the population, based on types of personnel data that can be obtained from service records. As many as possible of the user-descriptive factors should be assessed before conducting interviews or observations. The statistics that are gathered should be more detailed than, for example, average time in military service or average AFQT score.

The suggested form for the prime data is a table in which each member of the military organization is identified by an arbitrary unique number and each member's descriptive data is listed beside his identification number. The descriptive data to be listed are:

a. Aptitude profile
b. Reading level
c. Intelligence
d. Time in active military service.
e. Prior military training
f. Prior military work assignments

On the basis of these prime data, any desired measures of central tendancy or measures of variability can be computed. The required data concerning job-relevant skills, knowledges, and duties can best be gathered through on-site investigation. If some class of information is unavailable (e.g., reading level), arrangements should be made to obtain those data before or during the visit. For instance, standard reading tests could be administered to the analogous population.

Interviews and Observation--The prime purpose of visiting the military installation where the analogous population works is to explore any differences that may exist between the statement of

skills, knowledges, and duties in the Preliminary User Description and those existing in the analogous population. This purpose can be accomplished through a visit of one or two weeks duration, given a system of moderate complexity.

A series of interviews with supervisors and maintenance technicians will generally prove to be the most valuable portion of any visit to an operational site. The assessment team should interview as many technicians and supervisors as they can. The greater the number of individuals that are interviewed, the more reliable the data will be. Although some of the discussion will necessarily pertain to equipment functioning, the assessment team should try to steer the interviews into a discussion of the tasks a maintenance technician performs and the abilities and knowledges the technician must possess.

Observation of maintenance technicians in the actual performance of their duties is one of the most important techniques for learning what skills and knowledges they employ. Before making the site visit, the assessment team should familiarize itself thoroughly with available system documentation, including applicable maintenance manuals, job inventories, maintenance engineering analyses, and previously compiled task analysis data. From such sources the assessment team should attempt a first-cut description of the skills and knowledges of the technicians in the analogous population. This ground work serves to channel the investigation into profitable areas of inquiry. The team will better know what tasks they need to observe and what questions need to be posed in the interviews.

2.5.4 Product of the Analogous User Assessment. The report of the user assessment team will be stated in terms of the same dimensions that are used in the Preliminary User Description. It will be presented in such a way as to facilitate a point-by-point comparison with the PUD.

2.6 Modified User Description (3.2.9)

2.6.1 Recommended Personnel Type. Task Analyst.

2.6.2 Overview of the Modified User Description. Any differences that exist between the Preliminary User Description and the product of the Analogous User Assessment are discussed at a conference attended by a representative of the Procuring Agency (the JPA Manager) and the analogous user assessment team. The purpose of the conference is to produce a Modified User Description that expresses an exhaustive and realistic set of assumptions about the types of individuals who will be using the JPA manuals that are to be produced. Of course, there is no need for the Modified User Description to differ in any way from the Preliminary User Description unless the Procuring Agency agrees that some of the

assumptions stated in the PUD are unrealistic or that the set of assumptions needs to be augmented. However, each point at which differences exist should be considered and a determination should be made whether the PUD needs to be changed or augmented. In evaluating the differences, cognizance should be taken of the fact that the analogous population typically has a somewhat greater degree of experience with equipment similar to that in the subject system than has the population of intended JPA users.

The expectation is that a more complete and realistic statement of the JPA target audience will issue from this meeting. The decisions of the Procuring Agency concerning the contents of the Modified User Description will be final.

2.7 JPA/Training Trade-Off Ground Rules (3.2.10)

2.7.1 Recommended Personnel Types. Task Analyst (Procuring Agency should provide assistance from an ATC Training Specialist).

2.7.2 Overview of the JPA/Training Trade-Off Ground Rules. The JPA/Training Trade-off Ground Rules consist of a set of statements pertaining to the classes of tasks that will be conveyed to the technicians through training alone, through JPA alone, and through both. The application of these ground rules to the tasks in the subject system (as found in the TIM) accomplishes the "JPA/Training trade-off." How the "JPA/Training trade-off" fits into the total JPA process has been discussed on page 2-5.

2.7.3 Generating the Ground Rules. In deciding what combination of training and JPA will be used to support job performance requirements, the following factors should be considered:

a. Ease of learning
b. Ease of communication by book
c. Task criticality
d. Task difficulty (how prone to inadequate performance)
e. Importance of reaction time or response rate
f. Frequency of task performance
g. Number of similar tasks
h. Psychomotor skill component of task
i. Rate of stimulus input
j. Rate of response output
k. Equipment complexity
l. Equipment accessibility
m. Environmental considerations
n. Mission criticality
o. Consequences of improper step performance on task performance
p. Personnel hazards
q. Audience career orientation
r. Number of individuals who perform a task

There is no known way to proceduralize the formation of JPA/Training trade-off ground rules. Many factors need to be simultaneously considered, but they are considered in a rather imprecise way. It is still an art and not a science. However, the following general rules should be helpful. These rules apply across systems. The task analyst and the training specialist must create system specific rules by identifying classes of system tasks that possess the named attributes. Two sets of rules are presented--one for tasks that belong in the training program; the other for tasks that should be described in JPA. Classes of system tasks that have attributes falling under rules in both sets should be covered by both training and JPA.

Put in training:

a. Tasks that are not very easy to learn on the job.

b. Tasks that are hard to communicate with words.

c. Tasks that need a great deal of practice for acceptable performance to be established.

d. Tasks where there is little room for error.

e. Tasks where consequences of error are serious.

f. Tasks that do not take exorbitant sums of money to train.

g. Tasks which are performed frequently on the job.

h. Tasks in which the required speed or response rate does not permit referring to a manual.

i. Tasks performed by a large proportion of the individuals in a given specialty.

Put in Job Performance Aids:

a. Behavior sequences that are long and complex.

b. Tasks that are rarely performed.

c. Tasks that involve readings and tolerances.

d. Tasks that can be mentally rehearsed before the need to perform them arises.

e. Tasks that are aided by the presence of illustrations.

f. Tasks that utilize reference information, such as tables, graphs, flow charts, and schematics.

g. Tasks with branching step structures.

The data sources to be used in creating JPA/Training Trade-off Ground Rules are the total set of system descriptive and task descriptive documentation that the task analyst has been able to gather. In addition, a great deal of useful information and insight will be obtained from participation in the Analogous User Assessment.

The JPA/Training Trade-off Ground Rules and the JPA/Training trade-off itself, as accomplished in the next stage by annotating the TIM, are always accomplished on the basis of imperfect and incomplete information. However, the JPA process provides for revisions in the trade-off to be made on the basis of information developed in the task descriptive worksheets--more specifically the Task Description and Information Index and the Detailed Step Description Worksheets. At that point the task analyst may learn for the first time how critical a task is to mission success or that a task is so simple that written instructions would be superfluous. The training specialist, for his part, could discover, while planning a course of instruction, that performance aid support for a task would be beneficial, even though it had not been earlier contemplated.

2.8 TIM Annotated for JPA/Training Trade-off (ATIM) (3.2.11)

2.8.1 Recommended Personnel Types. Task Analyst, Data Collection Assistant.

2.8.2 Overview of the Process. Preparation of the Preliminary Task Identification Matrix requires that level-of-maintenance decisions be recorded in the upper-left portion of the matrix cells. The PTIM becomes the ATIM when the JPA/Training trade-off decisions are recorded in the lower-right portion of the same matrix cells. The entries that are possible are the following:

— - (dash) no maintenance task of this type is performed on the hardware item.

H - performance of this task will not be described in detail in the JPA.

B - performance of this task shall be described in the JPA and it shall not be one of the specific behavioral objectives for training.

J - performance of this task shall be described in the JPA and shall also form one of the behavioral objectives to be achieved through training.

The H, B, and J or the above coding stand for head, book, and joint coverage, respectively. It should be noted that, as the codes are defined, the JPA developer is responsible for covering all B and J tasks; but the content of training is not totally assigned at this point. All of the J tasks will receive training coverage. However, it is likely that some of the H tasks will be judged by the designers of training to be in the behavior repertoire of the input trainee and thus will not need training.

The operation of annotating the TIM to reflect the JPA/Training trade-off decisions should, if possible, be performed by an analyst who performed the Analogous User Assessment and developed the JPA/Training trade-off ground rules. There are two types of problems that require special attention:

a. It may be unclear in some cases how specific tasks fall into the task classes set up in the ground rules.

b. The ground rules may fail to be exhaustive of the total population of tasks in the system.

When either of these conditions exists, the task analyst has to make decisions about individual tasks.

2.9 Validation of the ATIM

2.9.1 Recommended Personnel Type. Task Analyst.

2.9.2 New System Procedure. Divide the ATIM into subsystems and assign subsystems to validation team members who are acquainted with maintenance of the kind of hardware represented by the subsystems.

Interview personnel familiar with each subsystem to validate cell entries. Request cell-by-cell confirmation of task or non-task. For example, you might ask, "Do you adjust the _____ (name the hardware item)?" Confirm level-of-repair codes by checking against the official provisioning list. Confirm JPA/Training trade-off codes by checking each entry against the JPA/Training Trade-off Ground Rules. Submit validated ATIM segments, as completed, to the Air Force JPA Manager for review.

2.9.3 Existing System Procedure. Be sure that the JPA Manager obtains concurrence with all ATIM entries from the Air Materiel Area (AMA) which provisions the system. If there is more than one AMA for the system, divide the ATIM as appropriate and request confirmation of the completed ATIM segment which applies from each AMA. Although the JPA Manager has ultimate authority in decisions regarding the JPA contract, the AMA for an existing system has ultimate authority regarding maintenance of the system. It is in the JPA contractor's interest to see that conflicts are resolved to the mutual satisfaction of the JPA Manager and the AMA.

While still working with the AMA for confirmation of the ATIM, determine what personnel in the field are to be used for field validation. It will be necessary to determine what subsystems, maintenance levels, and maintenance tasks are attended to by which personnel at the site of ATIM field validation. Assign the AMA-confirmed ATIM to the personnel who actually perform the maintenance tasks.

2.9.4 Procedure for Both New and Existing Systems. Make up the field validation team, taking into consideration the number of people needed to completely cover the ATIM within the time allotted for validation. Team members assigned to validate ATIM segments should be persons acquainted with the maintenance of the kind of hardware items or subsystem to which they are assigned. Personnel must also be familiar with the ATIM format and symbol usage.

Brief the validation team with information about:

a. The field validation procedure.

b. The time scheduling.

c. Questions to ask field personnel.

d. Records needed.

e. Answers to questions.

f. Differences between field practice and the cell entries already on the ATIM.

g. Resolution of differences if made in the field.

h. Verification of cell-by-cell validation.

Have each member of the field validation team perform the following procedure:

a. Utilize an ATIM with cell entries made as determined by existing maintenance documentation, and approved by the appropriate AMA(s).

b. Enter differences in field practice and the approved maintenance concept entry by marking the new symbol over the old within the appropriate cells.

c. Use a questioning procedure. For each hardware item and maintenance, ask the respondent:

"Do you _____ the _____?"
maintenance function hardware item

If the answer if "yes," there should be an entry indicating the appropriate level of maintenance. Question the respondent to determine if his "yes" is actually in reference to the function being done on a different level of equipment. He may volunteer the information with his answer (e.g., "yes, but it's done as part of _____").

If the respondent answers "no" to a question, request more information with such questions as:

"Why isn't it done?"

"Is it done by someone (or somewhere) else?"

"Can it be done?"

Note the answers to these questions to indicate that it is not done because, for example:

"It's not applicable to that item."

"Parts or equipment are not available in the field to do that maintenance function."

Questioning a "no" answer is especially important if the cell of the ATIM already indicates the presence of a task. In these cases, a reconciliation between field practice and maintenance concept must be made. Only the Procuring Agency has the authority to resolve such a difference in favor of some peculiar field practice. In addition, a respondent may answer "no" incorrectly for various reasons. Further questioning will usually clarify such cases.

If it is necessary to reconcile differences between field practice and the maintenance concept, request a meeting attended by AMA representatives and representatives of the using command. Present differences for resolution and document how the differences were resolved.

Some ATIM segments may be submitted to the Air Force JPA Manager prior to other segments if AMA approval and field validation are completed on them. When the validated ATIM is submitted, the JPA Manager should have available to him:

a. Documents used to produce the ATIM.

b. Approval documentation from the AMA(s).

c. Documentation of field validation including resolution of differences.

2.10 Level of Detail Guide (3.2.12)

2.10.1 Recommended Personnel Type. Task Analyst.

2.10.2 Overview of the Level of Detail Guide. The Level of Detail Guide is a statement of how detailed the information provided in JPA needs to be, based upon what is known about the target audience and what is known about the equipment systems. It consists of a set of coverage rules stating what needs to be told the technician and how deeply the JPA should go into each matter.

How to describe the following types of task actions is treated by the Level of Detail Guide:

Discriminations and Perceptions

a. Observing Gross Indications--If a technician must respond to a gross indication such as a light being on or a meter being out of an acceptable band of values, will the task step merely name the indicator or meter and state the value to be observed? Will there always be an illustration that shows the indicator in the "on" state or the meter in an out-of-tolerance condition? How much of the context will be illustrated and how much will be described in words?

b. Reading Quantitative Values--When a technician must respond to a precise value on a meter (plus or minus some tolerance), will the meter face always be illustrated? Which meters will be treated differently? Will counters be treated the same as scales? Will some meters require special instructions on how they are to be read (e.g., how to make interpolations)?

c. Noting Relative Motion--Will instruments be used to detect relative motion between components? How much will have to be said concerning the use of these instruments? If instruments are not used, how much should be said about the technicians point of observation? Will the illustrations indicate the direction of motion?

d. Reading or Interpreting Oscilloscope Patterns and Waveforms--How will standards for comparison be presented? What dimensions of the waveforms will be specified? How much will be said about the appropriate methods for determining amplitude, frequency, and shape of the waveforms?

e. Noting Visually Detectable Physical Defects--Will standards for comparison be presented or will it be assumed that these judgments will be mastered in training? Will illustrations show only obviously acceptable and obviously unacceptable conditions, or will various degrees of marginally acceptable conditions be shown and evaluated?

f. Detecting Presence or Absence of Sounds and Vibrations--Will the sounds or vibrations be characterized in words, or will they merely be named? Will tactual detection be used for vibrations?

g. Discrimination of Pitch or Other Characteristics of a Sound--In what term will pitch be described? In what terms will other characteristics of sound be described?

h. Discrimination of Odors--How will significant odors be described?

Problem Solving and Decision Making

a. Selection of Appropriate Next Step or Task--Will guidance be provided for each decision that arises? In what situations will the next step or task not be specified?

b. Performing Calculations--What sorts of calculations will be explained in detail? In what cases will tables or nomographs be substituted for each calculation?

c. Exercising Judgment--What sorts of judgments will the technician be required to make without the aid of JPA? When judgments are aided, what sort of aid is provided?

d. Conversion of Data from One Form to Another--Will conversions (e.g., binary to decimal or Farenheit to Centigrade) be aided by tables or graphs? Will complete instructions and examples accompany any tables or graphs that are presented?

Motor Actions

a. Activating Switches--Will the desired setting for the switch be illustrated as well as being specified in the text? Will the location of the switch be illustrated, described in the text, or neither?

b. Adjusting Continuous and Multiposition Controls--Will the desired setting for the switch be illustrated as well as being specified in the text? Will the location of the switch be illustrated, described in the text, or neither? Will the direction of operation be specified (e.g., clockwise, to the left).

c. Performing Coordinated Gross Body Movements--Will the movements required for moving and positioning hardware items be described or merely named?

d. Performing Actions Requiring Fine Psychomotor Coordination--Will task instructions offer coaching in the performance of fine psychomotor coordination?

Of course the set of questions advanced above is only suggestive of the ones that should be answered in the Level of Detail Guide. Additional questions will need to be answered for most systems, and some of the above may not apply to a given system. Answers to questions about what kinds of information should be provided should be inferred from the characteristics of the JPA user population, as established in the Modified User Description, and from decisions about the content of training, as stated in the JPA/Training Trade-off Ground Rules.

2.11 Test Equipment and Tool Use Form (3.2.13)

2.11.1 Recommended Personnel Types. Task Analyst, Data Collection Assistant.

2.11.2 Overview of the Test Equipment and Tool Use Form. The primary purpose of the Test Equipment and Tool Use Form (TETUF) is to record the kinds of information that need to be provided about tools and test equipment and the level of detail at which the information is to be provided. Secondly, the TETUF records the decisions that are made about how tools and test equipment are to be covered in training. In these two objectives it combines the functions of the Level of Detail Guide and the JPA/Training Trade-off Ground Rules, but instead of speaking of tasks it treats the use of special tools and test equipment. A third purpose of the TETUF is to consolidate in one place the data concerning special tools and test equipment. This promotes easy access to the information, easy revision of the information when special tools and test equipment are later changed, and a consistency in the level of detail.

2.11.3 Process of Preparing a Test Equipment and Tool Use Form. The following process will produce an acceptable TETUF:

a. Indicate the name and number of each item of test equipment or special tool used. A special tool is any tool not in the mechanic's normal tool kit, as defined by the Procuring Agency. Such information usually is obtainable from the General Requirements Section of relevant T.O.s or T.M.s as illustrated in paragraph 2.2 of Figure 2-2.

b. For each tool or item of test equipment, list all of the functions for which the device is used (e.g., an oscilloscope may be used for measuring both frequency and amplitude). Such information is found in the technical manuals that describe each of the special tools and items of test equipment. It can also be based upon the analyst's general knowledge of the typical uses for the tool or instrument in question.

c. For each tool or instrument function, enter the general categories of task description data which will have to be supplied to the JPA user to enable him to operate the tool or instrument. This

CHAPTER 2

MAINTENANCE INSTRUCTIONS

Section I. GENERAL REQUIREMENTS

2-1. Scope of Organizational Maintenance

The maintenance duties assigned to the organizational maintenance repairman of the helicopter electronic equipment configuration are listed below, together with references to the applicable paragraphs covering the specific maintenance functions. These maintenance duties supplement the daily, intermediate, and periodic preventive maintenance checks and services contained in the organizational maintenance manual of the helicopter (TM 55-1520-210-20). The procedures covered in this manual will be performed concurrently with the helicopter periodic preventive maintenance checks and services. The results of the preventive maintenance checks and services will be recorded on applicable maintenance forms in accordance with instructions in TM 38-750.

a. Periodic preventive maintenance checks and services (para 2-7).

b. Cleaning and repainting (para 2-8).

c. Servicing (par 2-9).

d. Troubleshooting (paras 2-10 and 2-11).

e. Repair (para 2-12).

f. Adjustment (para 2-85).

2-2. Tools, Test Equipment, and Materials Required

A list of parts authorized for organizational maintenance of the helicopter electronic configuration appears in TM 55-1520-210-20P and TM 11-1520-210-20P. Major electronic equipment components, when removed from the helicopter for higher category maintenance are replaced by serviceable components from maintenance float stock or on a direct exchange (DX) basis from higher category maintenance organizations (direct support maintenance). Tools, materials, and test equipment required for organizational maintenance are listed below.

a. *Tools.*

(1) Tool Kit, Electronic Equipment TK-105/G (SM 11-4-5180-R).

(2) Tool Kit, Battery Service TK-90/U (SM 11-4-5180).

(3) Apron, Battery workers (FSN 8415-234-9253).

(4) Goggles, industrial type (FSN 4240-521-6586).

b. *Test Equipment.* The following chart lists the test equipment required for organizational maintenance and the applicable manual for each test equipment:

Test equipment	Technical manual	Required for:
Multimeter AN/URM-105	TM 11-6625-203-12	ALL facilities
Test Set, Electrical power AN/UPM-98.	TM 11-6625-203-12	Ac power source
Test Set, Transponder Set AN/APM-156 or Test Set, Transponder AN/APM-128.	TM 11-6625-560-12	IFF
Test Oscillator BC-375-(*)	TM 11-6625-523-15 or -15/1	Marker beacon
Decca test sets:		
Decca LRO-1		Navigation Set, Position Fixing AN/ASN-72.
Decca Model 570		

2-1

Figure 2-2. Sample of Technical Data Identifying Test Equipment and Tools Used in Organizational Maintenance

entry will require a judgment on the part of the task analyst, based upon his knowledge of the tool or instrument, how it is operated in performing the function in question, and the information requirements of the task performer. Whenever possible the analyst should construct a "standard statement" that sets forth as many as possible of the actual words to be used when a certain category of data is supplied in the JPA. The following are some illustrative standard statements:

Using Tektronix 454, connect input to _____( ).
Connect scope chassis to equipment frame.

Set VOLTS/DIV switch to _____.
Set TIME/DIV switch to_____.
Set TRIGGERING SOURCE to _____.

Check that displayed waveform is similar to ( ).
If not, go to _____.

The decisions about what is to be said in the JPA are made by considering what will be acquired during training (also recorded on the TETUF), what attributes the JPA users will have (as expressed in the Modified User Description), and how complex and difficult is the operation of the special tools and test equipment.

d. For each tool or instrument function, enter the general categories of task descriptive data that will be conveyed in training. Making these decisions is similar to, and should be consistent with, the making of the JPA/Training Trade-off Ground Rules. The analyst should reread the description of that process in this handbook. As in the earlier trade-off, the analyst should not hesitate to indicate that a given class of information (e.g., safety precautions) will be covered by both JPA and training.

It is important to note that entries in the columns "Information to be Included in JPA" and "Information to be Given in Training" are made <u>for each function</u>, rather than for each tool or instrument.

2.11.4 <u>TETUF Validation</u>. The Test Equipment and Tool Use Form is usually validated concurrently with the validation of the ATIM. The same AMA personnel that are involved in ATIM validation for existing systems can give approval to TETUF entries. The SPO should provide such approval for new systems. The contractor needs to be able to show that the TETUF satisfies the following requirements:

a. It reflects the approved list of tools and test equipment procured for use in field maintenance.

b. The ATIM maintenance functions can be performed with the specific items listed in the TETUF.

c. The standard statements to be included in the JPA are appropriate for the specified using population.

2.12 Preliminary Information Worksheets (3.2.14)

2.12.1 Recommended Personnel Type. Data Collection Assistant.

2.12.2 Overview. One Preliminary Information Worksheet (and its continuation sheets, if any) is prepared for each task. The worksheet is later used as a draft for the Preliminary Information Page of the Job Guide.

2.12.3 Preparation of Preliminary Information Worksheets. A complete description of the type of information to be entered in these worksheets is found in paragraph 3.2.14 of the specification. The remarks that follow are intended to provide supplementary guidance for those items that might present some difficulties.

a. Special Tools and Test Equipment--All special tools and test equipment are listed on the Test Equipment and Tool Use Forms. The Preliminary Information Worksheets associate the special instruments and tools with the specific tasks in which they are employed. A few items of special tools and test equipment may be uncovered during the preparation of Detailed Step Description Worksheets. In that case, the TETUF will have to be supplemented.

b. Supplies--Enter sufficient nomenclature and part numbers for unique identification of all supplies used in the task. Supplies are all expendable items, consumable items, and non-accountable replacement parts that are customarily brought to (or are available at) the task site. This type of information is often found in the introductory sections of maintenance technical orders (see Figure 2-3).

c. Personnel Requirements--The minimum number of technical personnel required to perform the maintenance task should be identified. Each of these technicians should be identified by job title and level(s). The location of each of the technicians when performing the task should be identified: e.g., "Technician A is in the cockpit, Technician B is on the ground at the tail of the aircraft." The communication requirements between technicians are also to be indicated, including the method of communication and the information exchanged. Requirements for assistants to help the maintenance technicians in performing a task and requirements for specialists to perform a task segment should be specified in much the same way.

Test equipment	Technical manual	Required for:
Decca Model 305 Test facilities kit (Laboratory for Electronics #101675) Decca model 306		

c. *Materials.*

(1) Cleaning compound, FSN 7930-895-9542.

(2) Clean, dry, lint free cloths.

(3) Lubricating oil, general purpose, preservative.

(4) Fine sandpaper No. 000.

(5) A soft bristle brush.

(6) The following safety wire can be requisitioned:

Description.	Diameter	Unit of issue
Safety wire, steel, corrosion-resistant, annealed.	0.047	Spool
Safety wire, steel, corrosion-resistant, annealed.	0.063	Spool
Safety wire, steel, corrosion-resistant, annealed.	0.032	Spool

2-3. Fuse and Circuit Protective Device Locations

The only fuses in the electronic equipment configuration that are accessible without removal of electronic equipments from the helicopter are the fm liaison set fuses located on the front of Dynamotor DY-107(*)/AR (fig. 2-2). The push-pull type, dc circuit breakers are mounted on the overhead console. The ac circuit breakers are mounted on the right-hand forward side of the pedestal. The chart below lists the locations of all accessible fuses and circuit breakers that provide circuit protection for the electronic equipment.

Equipment	Rating	Location	Figure No.
Radio Set AN/ARC-44	150V, 0.5 amp	Dynamotor DY-107/AR	2-2
	300V, 0.5 amp	Dynamotor DY-107/AR	2-2
	10 amp	DC circuit breaker panel	2-1
Radio Set AN/ARC-54	15 amp	DC circuit breaker panel	2-1.2
Radio Set AN/ARC-58	25 amp	DC circuit breaker panel	2-1
Radio Set AN/ARC-51	15 amp	DC circuit breaker panel	2-1.2
Radio Set AN/ARC-73 (XMTR)	10 amp	DC circuit breaker panel	2-1.2
(RCVR)	5 amp	DC circuit breaker panel	2-1.2
VHF Emergency Transmitter T-806A/ARC	5 amp	DC circuit breaker panel	2-1.2
Radio Set AN/ARC-102	50 amp	DC circuit breaker panel	2-1.2
Intercommunications			
Signal Distribution Panel SB-329/AR	5 amp	DC circuit breaker panel	2-1
Control Intercommunication Set C-1611(*)/AIC (PILOT-CREW) (STA R.H.)	5 amp	DC circuit breaker panel	2-1.2
Control Intercommunication Set C-1611(*)/AIC (COPILOT-CREW) (STA. LH.)	5 amp	DC circuit breaker panel	2-1.2
Radio Receiving Set AN/ARN-60	5 amp	DC circuit breaker panel	2-1
Radio Receiving Set AN/ARN-82	5 amp	DC circuit breaker panel	2-1.2
Direction Finder Set AN/ARN-59 (Radio Compass)	5 amp	DC circuit breaker panel	2-1
Direction Finder Set AN/ARN-66 (LF NAV ADF)	5 amp	DC circuit breaker panel	2-1.2

2-2

Figure 2-3. Sample of Technical Data Identifying Supplies Data

d. Forms--Self-explanatory.

e. Equipment Condition--Before the technician can begin or complete the task, the system may, for example, need to be on jacks, or to have seats removed. In most cases such prerequisite task requirements will be documented in the Technical Orders and Manuals as shown in Figure 2-4. For each task, the task analyst should verify whether the task can be performed without other tasks having been completed, e.g., "Disconnect battery." In some cases, possible "nonallowable" conditions may exist and it will be necessary to document these conditions for the technician, e.g., "Aircraft must not be on jacks for this task."

f. Notes, Cautions, and Warnings--The notes, cautions, and warnings listed on this form are ones that apply to the task as a whole. They apply to points that need to be made clear before a task is begun and to factors that need to be kept in mind throughout task performance. Those associated with specific steps are fully treated on the Detailed Step Description Worksheet.

g. Replacement Parts and IPB Reference--These are the spares that should be readily available at the time a task is performed. For example, some disassembly tasks may require that a certain spring always be replaced with a new one. That spring should be listed, together with the IPB page where it is illustrated.

h. Short Task Summary--A few words that distinguish this task from other similar tasks should be written. The task aim and the means for accomplishing that aim should be concisely stated.

2.13 Task Description and Information Index (3.2.15)

2.13.1 Recommended Personnel Types. Data Collection Assistant, Task Analyst.

2.13.2 Overview. This task descriptive worksheet consolidates general information concerning a task. One such worksheet is prepared for each task identified with a "B" or "J" entry in the Annotated TIM. For some data items (e.g., description of equipment and operation) it references other documents where the information can be found. Some of the data recorded on this form are data that were considered in making JPA/Training trade-off ground rules (e.g., criticality, frequency, adverse environmental conditions). Therefore, the task analyst may want to alter some of the earlier trade-off decisions that were made if earlier assumptions prove false. The assignment of a specific task to training or to JPA (or both) on the Annotated TIM can be modified, with the approval of the Procuring Agency.

6-15. TESTING HYDRAULIC SYSTEM WITH GROUND TEST STAND.

6-16. A portable hydraulic test stand can be used to provide pressure to test or bleed the hydraulic system without operation of the helicopter engine. Prior to use, the test stand shall be thoroughly clean and serviced with hydraulic fluid (item 4, table 1-2). The stand shall be equipped with a 10-micron filter and a calibrated pressure gage with a capacity of 1500 psig. The stand shall be capable of producing pressure to 1500 psig and have a minimum flow rate of 6 gallons per minute.

6-17. PREPARATION FOR TEST - PRESSURIZED RESERVOIR SYSTEM.

Note

The following information applies to YUH-1D and UH-1D/H, Serial No. 60-6028 through 64-13901 helicopters.

a. Position ground test stand by right-hand side of engine compartment.

b. Open right-side engine cowling and remove caps from the ground test couplings located on a bracket at forward firewall of engine compartment. Connect test stand hoses.

c. Apply electrical power to helicopter.

d. Position HYD CONTROL switch to ON.

Note

A complete visual inspection of the hydraulic system shall be accomplished before the functional test is performed to insure that all the components and lines are attached, secure, and appear capable of satisfactory operation.

6-18. PREPARATION FOR TEST - GRAVITY FEED SYSTEM.

Note

The following information applies to UH-1D/H, Serial No. 66-9565, and subsequent, helicopters.

a. Position ground test stand by right-hand side of engine compartment.

b. Open right side engine cowling, remove cap and break disconnect at ground test couplings located on a bracket at forward firewall of engine compartment. (Use portable hydraulic test reservoir.)

c. Cover end of removed hose to prevent entrance of foreign matter.

d. Connect test stand hoses.

e. Apply electrical power to helicopter.

f. Position HYD CONTROL switch to ON.

Note

A complete visual inspection of the hydraulic system shall be accomplished before the functional test is performed to insure that all components and lines are attached, secure, and appear capable of satisfactory operation.

6-19. BLEEDING HYDRAULIC SYSTEM USING GROUND TEST STAND - PRESSURIZED RESERVOIR SYSTEM.

Note

The following information applies to YUH-1D and UH-1D/H, Serial No. 60-6028 through 64-13901 helicopters.

a. Set test stand pressure at 5 to 20 psig.

b. Cycle tail rotor pedals rapidly until reservoir is full.

Caution

Do not depress indicator rod bleed valve if system pressure exceeds 25 psig.

c. Depress bleed valve on top of indicator rod to release any air trapped in that portion of the system.

6-9

Figure 2-4. Equipment Condition Information in a Technical Order

2.13.3 Preparation of Task Description and Information Index. The remarks of the following paragraphs are intended to supplement the instructions of paragraph 3.2.15 of the specification, and to provide additional guidance. Those items that might present difficulty in interpretation or completion are treated below:

a. Criticality--A task is critical, semi-critical or not critical depending upon whether improper task performance can degrade system functioning to an unacceptable level, and whether effective steps can be taken to prevent jeopardizing mission success.

b. Frequency--The frequency of scheduled tasks is stated in terms of either calendar hours or operating hours. (In calendar hours, 1 week=168; 1 month=720, 1 year=8760.) Unscheduled frequency is expressed in "times per year." State how often, on the average, the named maintenance function is performed on the named equipment item. A task that may be expected to occur twice a week within a system will have "104" in the "Frequency" blank and a check mark in the "Per Year" blank. The answer should describe frequency of occurrence per one system (e.g., per one helicopter, per one early warning radar set).

c. Memory Requirement--Fully explained in 3.2.15.7 of the specification.

d. Adverse Environmental Conditions--Pay especial attention to adverse environmental conditions the maintenance m must be taught to overcome and conditions that could make the use of maintenance manuals at the work site impractical.

e. Number of Steps--Fully explained in 3.2.15.9 of the specification.

f. Description of Equipment and Operation--Lengthy descriptions that exist in other documents may be referenced. If no description can be found in other documents, one must be prepared.

g. Task Initiation--A scheduled task need not have an entry for "Basis for Task Initiation."

h. Equipment Drawings--Indicate the location of as many different views as can be located.

i. Follow-On Tasks--Some tasks occur in groups--in pairs, in invariant chains of tasks. If the subject task is part of such a chain, indicate those tasks that follow the subject task.

2.14 Detailed Step Description Worksheets (3.2.16)

2.14.1 Recommended Personnel Types. Data Collection Assistant, Task Analyst.

2.14.2 Overview. The primary purpose of the Detailed Step Description Worksheets is to serve as a first draft for JPA Job Guides. Therefore, the step descriptions should be written at a level appropriate to the population characteristics, as set forth in the Level of Detail Guide. All writing requirements set forth in 3.3.7.3 of the specification must be met. Only verbs from the standard verb list (6.3) may be used. Generic nouns from the Generic Noun/Object List must be used in accordance with their stated definitions.

The data called for in this worksheet are the keystone of the task analysis. Obtaining good data will really test the capability of the task analyst.

For some tasks, the task steps will be documented in some detail in existing technical data. In other cases, the steps will have to be synthesized. *In every case, the Task Analyst must obtain a step-by-step description of the task, and identify all of the cues available to the maintenance man and all of the responses he must make.*

Starting from this information, JPAs can be developed which focus the maintenance man's attention on the proper cues, and tell him how to make the proper responses.

2.14.3 Preparation of the Detailed Step Description Worksheet. Most of the required procedures will probably not be found in Technical Orders. Those that are will probably be incomplete, and will have to be rewritten and have information added to meet the requirements of the draft specification. It is the task analyst's job to make certain that all of the information required to rewrite the procedure in accordance with the specification is in the data base.

In order to do this, he must examine the information available about a task and judge whether it is adequate to provide instructions at the level of detail required by the Level of Detail Guide. The required level of detail is a function of the capabilities and experience of the technician who must use the procedure to perform the task. Each of the step statements must be clear enough and include enough descriptive information to allow the reader to perform the step adequately.

One of the most important abilities a task analyst can have is skill in imagining how the novice will perceive the real equipment and how he will relate to it using the JPA as his representation of reality. In writing step descriptions, the analyst must mentally put himself in the place of the maintenance technician who will perform the task in the field. He examines the written documentation; he goes through the process of performing each step; he continually considers what the maintenance man sees and what this perception should cue the man to do.

The analyst must visualize performance of the task and conceptualize the JPA that will be prepared to meet the stated requirements. He must then judge whether the needed data are in the data base. Finally, he must obtain any missing information and complete the task data base. Consider the following example: the task step, as documented in a T.O. is:

> "Disconnect the electrical connectors
> and the antenna cable from the receptacles
> on the front of the receiver-transmitter."

The task analyst must determine what specific actions are required by the maintenance man in order to perform the step as stated. Some questions the analyst must answer are:

a. How will the maintenance man know which are electrical connectors, and which is the antenna cable? Is an illustration required? Is there a suitable one in the data base?

b. Are there any other lines to be disconnected? If so, see a above.

c. Where is the Receiver-Transmitter?

d. How is the Receiver-Transmitter recognized?

e. What steps are required to gain access to it?

f. How are the connectors removed? What is the right action verb?

g. Are any "cautions," "warnings," or "notes" required? What are they?

h. How does the maintenance man know when he has performed the required action correctly?

i. What errors are likely to be made, and what information is needed to prevent them?

j. Are the connectors safety-wired? Does it make any difference whether they are, or has it been decided that removal of safety-wire will be covered in a general instruction, and therefore not have to be mentioned?

k. What tools, if any, are required? Are they in the normal tool kit of the particular type of maintenance man who will perform this task? If not, what information is needed to describe or illustrate the use of the tool in this task in accordance with the requirements of the Test Equipment and Tool Use Form?

Rarely will the available data base of written documentation be adequate to answer all of the required questions. Even the best technical data systems do not provide information on every detail, every specification, every view of the equipment which the task analyst will require (and he may not be fortunate enough to be working with one of the best). In the case of typical illustrations in T.O.s, for example, the line of regard, the angle of the view, and the perspective can conceal much information. An Illustrated Parts Breakdown is designed to show which pieces are connected to which pieces and (sometimes) in what order. The IPB is generally provided in lieu of assembly and disassembly instruction. If the task analyst is attempting to write or, at least, conceive these instructions, he is severely handicapped if he has only the IPB to work with, for it will not show him the relative size of parts or tools and the openings through which they must pass, or the other possible positions of parts as the equipment performs its operating cycle. It will also probably fail to show what will fall off the other side if the technician removes bolt "B"; that gear "C" is pressed onto shaft "D"; that if pin "R" is removed, spring "L" will unwind, propelling shims "N & P" out of the work area; that when nut "Q" is removed, bolt "R" will fall into an adjacent unit and break three vacuum tubes, etc.

Even when the required information is present it can be difficult to convert into a usable form. Consider, for example, the use of a mechanical assembly drawing of a piston engine and the difficulty of determining the position of the #8 exhaust valve cam lobe when the crank is rotated from the position shown to bring the #1 piston to top dead center.

Skill in recognizing and dealing with such difficulties comes slowly and with considerable experience. The burdens placed on the human imagination are great; these burdens create conditions under which errors are likely.

The result may be procedures with necessary steps, notes, cautions, and warnings left out, tasks and steps which cannot be performed as stated, incomplete and inaccurate illustrations, and in some cases, much more cumbersome procedures than would otherwise be required.

It must be obvious that the cost of identifying and correcting these conditions during validation will be high, and will be compounded by the wasted effort in putting material which will have to be reworked into a form suitable for validation. The remedy is to validate the task analysis in process by working directly with the equipment throughout the task analysis phase.

The equipment and its requirements are the ultimate criteria for the accuracy of the task analysis and the adequacy of the resultant task instructions and supporting illustrations. The equipment itself

is the only completely reliable source of information about it. The task analysis phase of any JPA development, therefore, must be planned to incorporate frequent and substantial interaction with the subject hardware.

2.14.4 Special Treatment of Notes, Cautions, and Warnings. Technical Orders and Manuals ordinarily will provide some of the notes, cautions, and warnings statements required for JPA job procedures. However, in many cases it will be necessary for the task analyst to verify or add new statements by means of interviews with user personnel or observation of their performance of the task. In almost all cases it will be necessary to augment T.O. information with additional detail. Warnings and cautions must state specifically: 1) the hazard, 2) the likely result if it happens, 3) specific steps to take to avoid it.

For example, a conventional T.O. might contain a statement like the following, which contains insufficient indication to the user of action he should take to avoid injury:

WARNING

Some terminals on TB101 carry up to 400 VAC. Exercise extreme caution when working near TB101.

The task analyst must, in such a case, develop a statement like the following, which meets the criteria stated above:

WARNING

The top two terminals on TB101 ( ) carry 440 VAC direct from the generator. If they are touched, death will be instantaneous. Before continuing, pull and tag GEN circuit breaker ( ); disconnect and tag generator cable ( ). Never touch TB101. Never work alone on this unit.

This sort of information is almost never found in conventional technical data.

2.15 Generalized Task List (3.2.17)

2.15.1 Recommended Personnel Type. Data Collection Assistant.

2.15.2 Preparation of the Generalized Task List. The preparation of this document, once the Detailed Step Descriptions have been completed, is exceedingly simple. It is a matter of listing those tasks whose step descriptions are not discriminably different. The difficulty of

this operation, such as it is, lies in the discrimination between those task pairs that are similar but actually different in some of the steps that must be performed versus those task pairs that are objectively identical even though different words are used to describe them. Tasks of the latter class belong on the Generalized Task List. Tasks of the former class do not.

A generalized task list should be begun when two tasks are judged alike. Any further tasks identical to the first two should be added to the list as they are found.

One type of task that might be represented on the Generalized Task List is relamping. The replacement of a lamp on one control panel may be identical in every way to the replacement of an identical lamp on a different panel.

As the analyst reads through slightly different versions of identical task descriptions, he may find one set of steps to be superior to the others in some ways. In that case, he should make the superior task the one named in the heading of the Generalized Task Form when it is prepared in its final form.

SECTION III

JOB GUIDE DEVELOPMENT

3.1 Overview of Job Guide Development

Job Guides contain illustrated, step-by-step instructions for the performance of all intermediate and organizational maintenance functions except troubleshooting. Scheduled inspections and clean, lubricate, and service tasks are provided in Job Guide format within the Inspection Guidelines Manuals; all other maintenance functions are provided in Job Guide format within the Maintenance Instruction Manuals.

Following the Task Analysis (Section II), in which all necessary task-related data are collected, indexed, and stored, the Job Guide development process is one of 1) organizing the task data (by subsystem and activity); 2) arranging the activity text and illustrations into frames; and 3) producing a final draft set of Job Guides for a system, ready for validation and verification.

A supplement to the set of Job Guides for a system, the Maintenance Support Information Manual, can be developed in parallel with the rest of the Job Guides. The contents of this manu vary across systems, so that considerable time may have to be spent in devising special formats for special information.

Figure 3-1 depicts the Job Guide development process, including various intermediate steps and quality control points. All points in the process at which contractor or Procuring Agency reviews are performed are treated in detail in the body of the chapter.

Unlike conventional technical data, which is hardware-descriptive, Job Guides may often be unaffected by hardware changes (in cases where the changes have no implications for task performance). Decisions about the handling of changes will have to be made on an individual basis. If, for example, the only necessary change to the Job Guide is on an illustration, the page to be changed can simply be cycled through the illustration process. If, however, the change is one that will require rewriting of the task steps, then the affected page or pages should first be given to a task analyst, who should decide on the content of the revised steps. The pages should then be recycled through the entire development process for reformatting, illustration revisions, and validation.

Decisions on the disposition of each new change, both during the JPA development and after the JPAs are put into service, should be made by an individual or individuals experienced in both task analysis

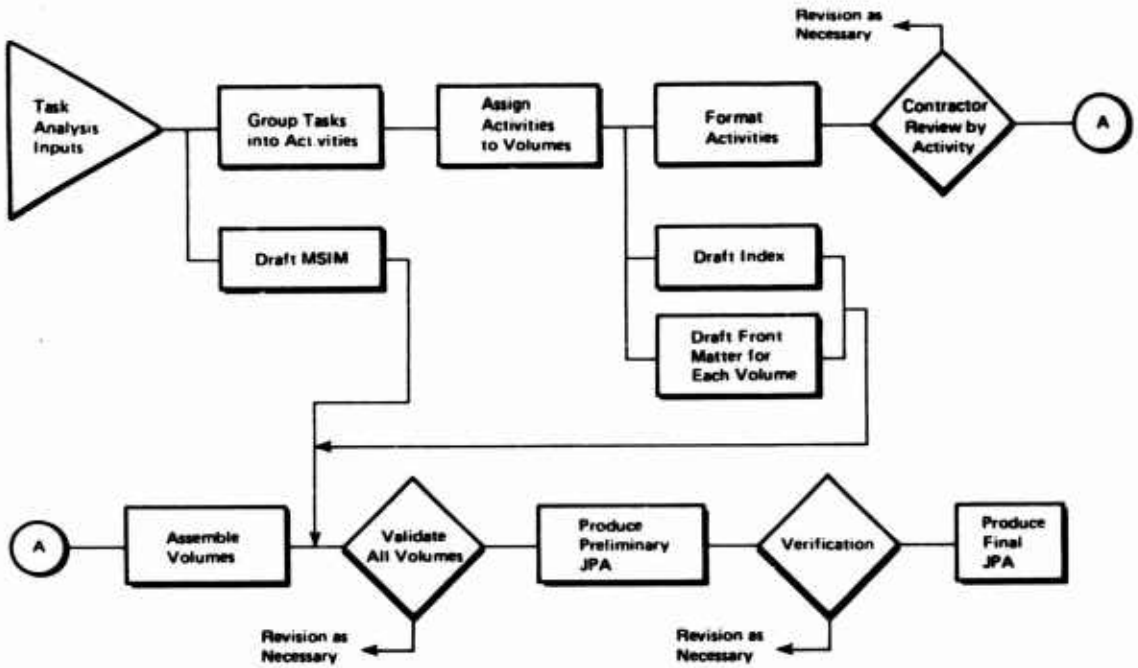

Figure 3-1. Job Guide Development Process

and JPA formatting. This individual must be able to assess the impact of the change on the performance of the task, and to determine whether the change will require an extensive rewrite or a relatively simple change of a few words or an illustration. He should be capable of implementing minor changes himself, in the proper format, and should have access to all necessary means for getting change pages produced in final form.

3.2 Recommended Personnel Qualifications

The recommended prerequisite skills and knowledge for personnel types performing the process steps described in this chapter are presented below.

3.2.1 Technical Writer. A technical writer with at least 2 years general technical writing experience; 1 year experience writing maintenance materials for the general type of system being described (e.g., helicopters); and 6 months experience with the specific system (e.g., the UH-1H), if the system is already in existence. He should have at least 6 months experience writing activities in the JPA format and be thoroughly familiar with sections 1, 2, and 3 of the draft specification. In addition, this individual should possess knowledge of (a) system and subsystem geography and nomenclature and (b) the structure and functional interrelationships of all elements of the system down to the level of the line replaceable item.

3.2.2 Formatter. The formatter's qualifications are identical to the qualifications for Technical Writer.

3.2.3 Technician/Observer. The Technician/Observer should have at least 5 years actual maintenance experience on the class of system and 2 years on the specific system concerned. The maintenance experience should include as many subsystems as possible. It should include system and subsystem geography and nomenclature and the purpose and functional interrelationships of all subsystem components down to the level of line replaceable item. The Technician/Observer should have 6 months experience teaching the above for the system concerned and should be competent in verbally communicating maintenance instructions. He should be familiar with the maintenance approach exemplified by equipment package and should have personally performed the activities he observes at least twice.

3.3 Group Tasks Into Activities

3.3.1 Recommended Personnel Type. Technical Writer.

3.3.2 Overview. All tasks in each subsystem are grouped into activities. An activity is defined as a single task or a group of tasks

which are usually performed in sequence. Tasks that are always performed in sequence with other tasks are grouped with those other tasks for assembly into a multi-task activity. Tasks that may be initiated or followed by a variety of other tasks are considered single-task activities.

3.3.3 Check for Completeness. Check the Task Descriptive Worksheets for each subsystem against the ATIM and verify that there is a set of worksheets for each non-Checkout/Troubleshoot "B" or "J" entry in the ATIM.

3.3.4 Group Sequenced Tasks into Multi-Task Activities

a. Using the Task Description and Information Index Worksheets, separate all tasks with no prerequisite tasks listed under Task Initiation (Item 11) and only a single follow-on task (Item 13). Each of these will be the first task in a multi-task activity.

b. Separate all remaining tasks with only a single prerequisite task (Item 11) and only a single follow-on task (Item 13). These tasks will be intermediate tasks in the sequence of some multi-task activity.

c. Separate all remaining tasks with only a single prerequisite task (11) and no follow-on tasks (13). These tasks will each be the last task in the sequence of a multi-task activity.

d. Sort all three groups of tasks into sequences in which each is referenced as a follow-on task by the one preceding it in the sequence, and as a prerequisite task by the one following it in the sequence.

e. Assign titles to multi-task activities. The task title specifies the type of maintenance to be performed and the hardware item that is to receive the maintenance. If none of the ATIM maintenance functions adequately conveys to the JPA user the nature of the task to be performed, the colloquial task name may be used.

f. Record the titles and list the contents of each multi-task activity.

3.3.5 List Remaining Tasks

a. The remaining tasks are all to be treated as single-task activities. They will, however, be of two types: those with no antecedent or subsequent tasks; and those with multiple antecedent or subsequent tasks. Every effort should be made to

reduce the number of isolated activities of the latter sort. Several means can be used to accomplish this reduction; the means are listed in order of preference below:

(1) Incorporate such an activity into each larger activity of which it is a part--this is particularly desirable when the single task is short.

(2) Include reference to such an activity in the input conditions of activities which follow it.

(3) In situations where a large number of identical steps are required to gain access to several different components in different tasks, it will frequently be advantageous to write the access information once, either as a separate activity or as a special instruction, and reference it in the various tasks. The reference may appear either in the Equipment Conditions section of the Preliminary Information Page or in the text of the task. Clearly, a tradeoff must be made between economy of space (a lengthy string of steps presented only once) and ease of use (the user constantly flipping pages to find the referenced material).

b. Add all remaining single-task activities to the list of titles of multi-task activities.

3.4 Assign Activities to Volumes

3.4.1 Recommended Personnel Type. Technical Writer.

3.4.2 Overview. All single- and multi-task activities are assigned to particular volumes within Maintenance Instruction Manuals, Inspection Guidelines Manuals, or Maintenance Support Information Manuals.

3.4.3 Maintenance Instruction Manuals. Assign all adjust, align, calibrate, disassemble/assemble, operate, remove/install, and repair activities to Maintenance Instruction Manuals, then divide into volumes in accordance with 3.3.3.2 of the specification.

3.4.4 Inspection Guidelines Manuals. Assign all clean, inspect, lubricate, and service activities to Inspection Guidelines Manuals and divide into volumes in accordance with 3.3.4.3 of the specification.

3.4.5 Maintenance Support Information Manual. Assign all activities considered by the Procuring Agency to be standard procedures to the Maintenance Support Information Manual.

3.5 Draft Index Volume

3.5.1 Recommended Personnel Type. Technical Writer.

3.5.2 Prepare the Data Coverage Plan. The structure of the Plan (3.3.6.3 in the Specification) is straightforward for Checkout/Troubleshoot tasks, but extra care must be exercised to be sure all adjust and align tasks referenced by or included in the Checkout/Troubleshoot tasks are also included in the Plan.

3.5.3 Prepare the Equipment Alphabetical Listing. Using the ATIM as the standard for completeness, list every combination of hardware item and maintenance function that has one or more "B" or "J" cell entries. Check the Preliminary Information Worksheet for each "B" or "J" cell entry in the ATIM. Add to the list all colloquial task names (item 6 on the PIW). Arrange the hardware names in alphabetical order. Under each hardware name, list the task verbs (alphabetically) for all "B" or "J" entries for that hardware item. Opposite each task entry that is exactly the same as the name that the JPA task bears, give the volume number and page number of the Preliminary Information Page for the activity of which that task is a part. If a task is called by its colloquial name in the JPA, the "official" task name (maintenance function and hardware entry from the ATIM) should be followed by a reference to the colloquial name instead of volume and page numbers.

3.6 Draft Front Matter for Each Volume

3.6.1 Recommended Personnel Type. Technical Writer.

3.6.2 Prepare all front matter for each volume in accordance with 3.3.7.2 of the specification.

3.7 Format Job Guide Activities

3.7.1 Recommended Personnel Type. Formatter.

3.7.2 Overview. Two of the task analysis intermediate products have been designed to be used as draft job guide material. The Preliminary Information Worksheet contains all of the information needed for that task on the first page of an activity, the Preliminary Information Page. If an activity consists of more than one task the Preliminary Information Worksheets for each task in the activity must be combined so that the Preliminary Information Page covers all of the tasks in the activity. The Detailed Step Description Worksheets and attached illustrations represent unformatted drafts of each of the tasks. The material from these worksheets is assembled for each activity and prepared by the formatter in the job guide format.

3.7.3 Format Preliminary Information Page. For single task activities, simply transcribe the information contained in the Preliminary Information worksheet in the sequence and format required by 3.3.3.5 of the specification. For such an activity, the activity index (3.3.3.5.i) will have only a single entry bearing the same name as the activity title. For multi-tasks activities, this page must combine the information contained in all of the individual Preliminary Information Pages for the tasks making up the activity. It is important that the entry under Equipment Conditions (3.3.3.5.h) is the one required to precede the first task in the activity. The activity index will contain an entry for each of the tasks making up the activity with the beginning page number listed for each task.

3.7.4 Format Maintenance Instruction Frame

3.7.4.1 Establish Proper Illustration Size. Before the actual formatting of a frame, it is important that the formatter determine the proper size for each illustration used in the activity. The final size of the illustration will be determined by the type of illustration it is (locator, enlargement, or exploded view), level of detail presented (refer to 3.3.7.4.d), and the reduction quality of the illustration (refer to 3.3.7.4.c). It is important that the formatter balance all three of these points to arrive at the proper size. If the chosen final size of the illustration is too large as in Figure 3-2, it will not only be occupying excessive space but consequently be increasing production cost. On the other hand, if the chosen final size is too small as in Figure 3-3, it may encourage crowding, in addition to sacrificing the detail and illustration quality. Figure 3-4 illustrates what would be considered a balanced proper size for illustrations presented in that particular frame. The illustration sizes have been chosen to convey necessary detail required by accompanying task steps, without being either unnecessarily large or too small to reproduce properly.

3.7.4.2 Lay Out the Text/Illustration Frame. In writing the activity, the analyst has tried to minimize the changing of one illustration to another. For this reason, as the formatter starts to construct a frame by reading the task steps in the Detailed Step Description Worksheet (DSDW), he should keep track of the number of different illustrations referred to in the text. After encountering approximately five different illustrations in the text, the formatter should examine the attached illustrations that go along with the task steps. As he examines the illustrations he should check to see if any needs a general locator. The formatter should then gather final size copies of the illustrations including any general locators. The text and illustration should be laid out as described in 3.3.3.6.d of the specification. Special

attention must be paid to the relationship between locators as described in 3.3.7.4.e, f, and l. The frame should now be examined to see if it is acceptable for final copy. Figure 3-5 illustrates an example of a frame in which there is excessive unutilized space. In a case such as this, the formatter should continue to add text and illustrations until more of the frame becomes filled as in Figures 3-4, 3-6, and 3-7. It is also important to note that all text columns must start at the top border of the image area. Note that the second column of the example in Figure 3-2 violates this rule. Figure 3-3 illustrates an example of a frame that has become overcrowded with information, especially on the second page. When laying out the text and illustrations, the formatter must allow adequate space for callout arrows and callout numbers. The crowding of callout numbers and arrows in Figure 3-3 could easily lead to errors in reading the illustration. The spacing of illustrations, arrows, and callout numbers should be balanced as in Figures 3-4, 3-6, and 3-7. When the layout of a frame is considered to be suitable, callout arrows and callout numbers should be applied in accordance with 3.3.7.4.j and k. After the arrows and numbers have been applied to the illustration, the proper callout numbers must be inserted in the text. The only step left in completing the frame is the insertion of the bold line between the text columns, which should be accomplished in accordance with 3.3.3.6.a of specification.

3.7.4.3 Quick Check of Each Frame. As each frame is completed it is important that the formatter make a quick review for errors. Here are some important areas to check:

a. Illustration identification number is identical in both Detailed Step Description Worksheet (DSDW) and on layout sheet.

b. Correct item has been darkened, outlined, or circled in the general locator.

c. Locator arrow touches general locator area that is darkened, outlined, or circled.

d. Callout arrows point to right places.

e. Callouts on illustrations match those in the text.

f. Test columns all start at the top of image area.

3.8 Draft Maintenance Support Information Manual

3.8.1 Recommended Personnel Type. Technical Writer.

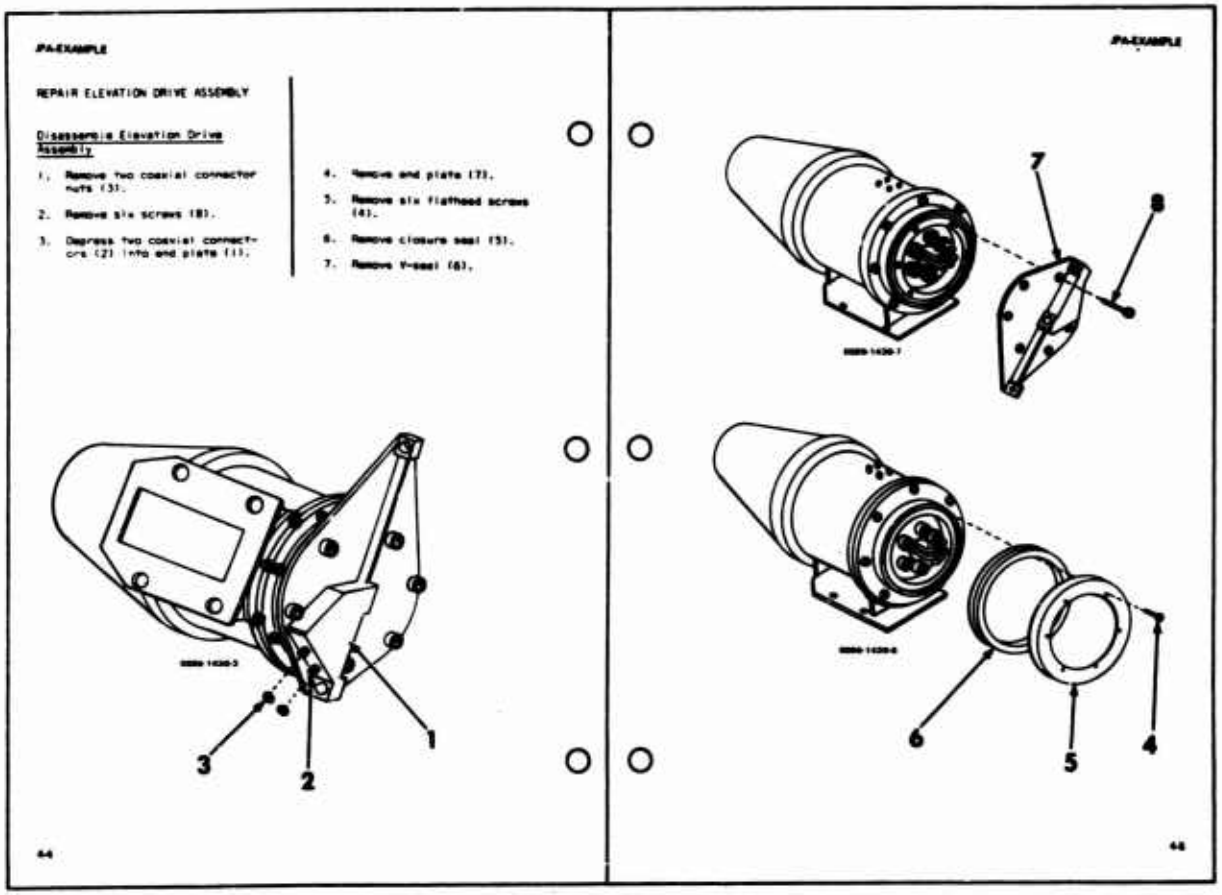

Figure 3-2. Maintenance Frame with Illustrations Too Large and Image Area Poorly Utilized

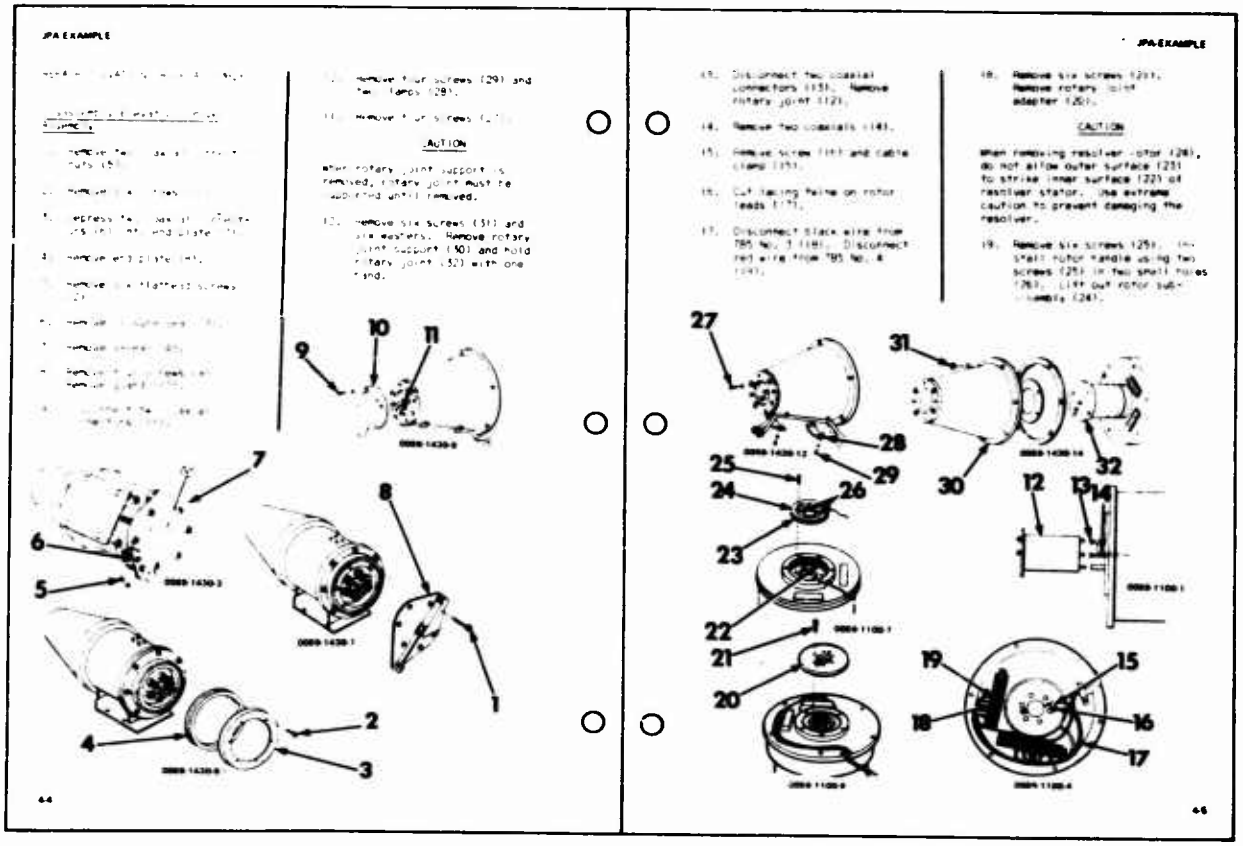

Figure 3-3. Maintenance Frame with Illustrations Too Small and Overcrowded Image Area

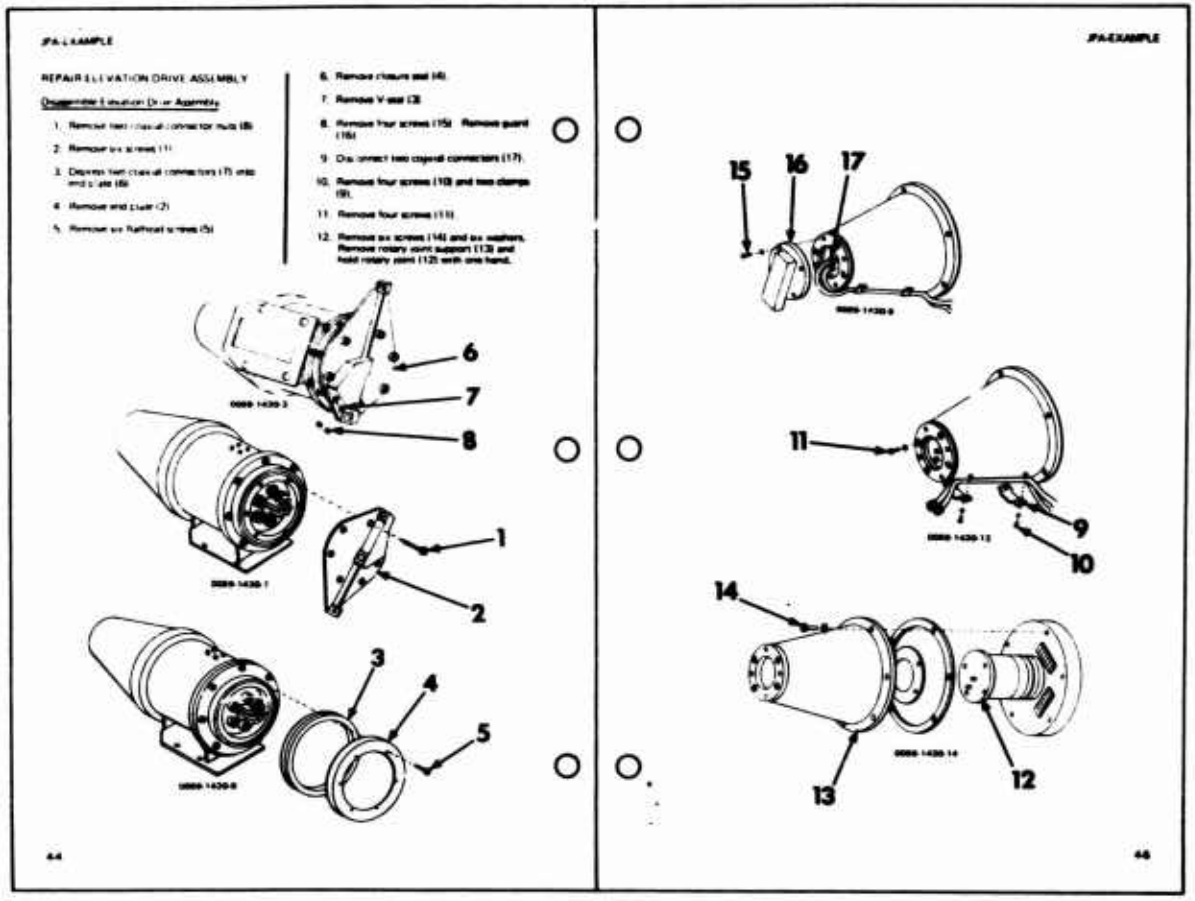

Figure 3-4. Maintenance Frame with Illustrations Proper Size and Image Area Well Utilized

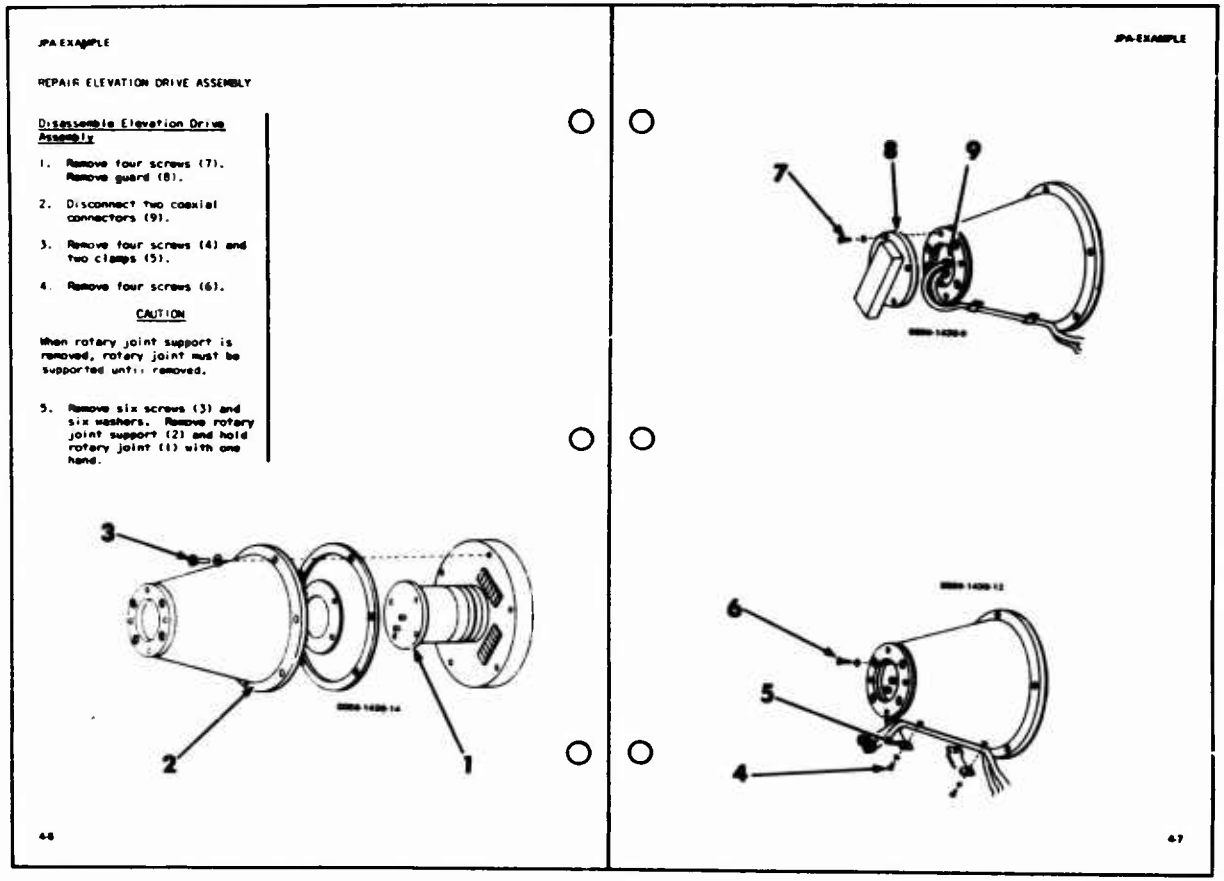

JPA EXAMPLE

REPAIR ELEVATION DRIVE ASSEMBLY

Disassemble Elevation Drive Assembly

1. Remove four screws (7). Remove guard (8).
2. Disconnect two coaxial connectors (9).
3. Remove four screws (4) and two clamps (5).
4. Remove four screws (6).

CAUTION

When rotary joint support is removed, rotary joint must be supported until removed.

5. Remove six screws (3) and six washers. Remove rotary joint support (2) and hold rotary joint (1) with one hand.

46

JPA-EXAMPLE

47

Figure 3-5. Maintenance Frame with Illustrations Proper Size but Image Area Poorly Utilized

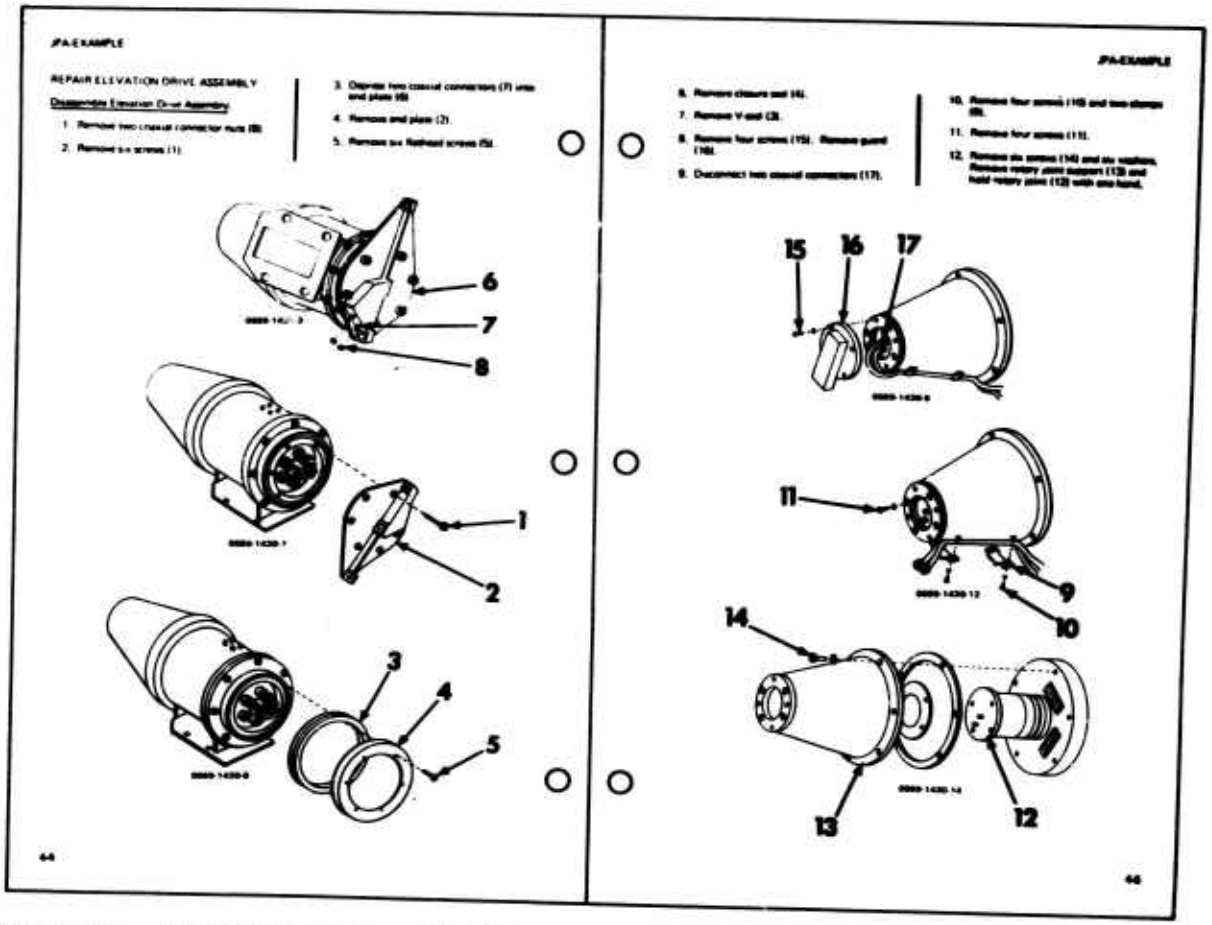

Figure 3-6. Maintenance Frame with Illustrations Proper Size and Image Area Well Utilized

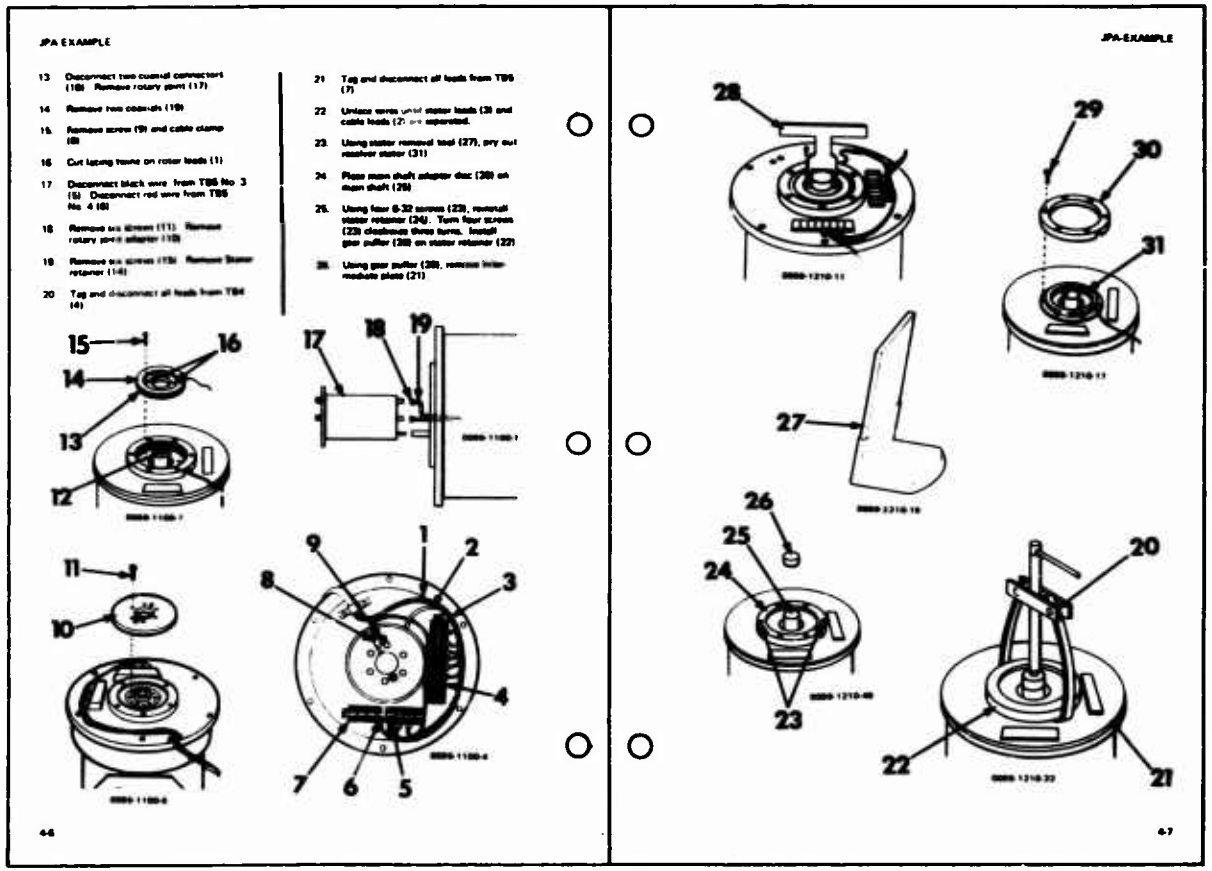

Figure 3-7. Maintenance Frame with Illustrations Proper Size and Image Area Well Utilized

3.8.2 Overview. The Maintenance Support Information Manual contains, in addition to standard procedures prepared exactly like job guide tasks, a variety of kinds of information that may not be compatible with the job guide/maintenance instruction frame format.

3.8.3 Format All Standard Maintenance Procedures. Some of the tasks identified on the generalized task list (3.2.17 of the specification) may be desired by the Procuring Agency to be presented as standard maintenance procedures. Any such tasks appearing in the Maintenance Support Information Manual will be formatted in exactly the same manner as other job guide tasks, including a Preliminary Information Page and Maintenance Instruction Frame.

3.8.4 Established Formats for Non-Maintenance-Instruction Material. All DSDW entries under Item 7 (3.2.16.7 in the specification) are to be included in the Maintenance Support Information Manual. This manual is included with the job guides for each system as a repository for information that is useful to the maintenance technician but that is not readily adaptable to the format of the Maintenance Instruction Frame. It will be the responsibility of the contractor to decide, for each entry in the manual, whether to adopt an existing format or to devise a new one. All formats used must be approved by the Procuring Agency.

3.9 Contractor Review by Activity

3.9.1 Recommended Personnel Type. Technical Writer. The review of any activity should not be performed by an individual who participated either in the task analysis or the formatting of that activity.

3.9.2 Overview. When the formatting of the job guide activity is completed it is necessary to check the format against the draft specification requirements and also to check the content for accuracy and completeness. To accomplish this the frame text and illustrations are given to a reviewer who follows a comprehensive step-by-step outline (Figure 3-8) in examining them. Any corrections and suggestions resulting from the review must be incorporated in the activity before validation.

3.9.3 Check Each Activity Against the Outline

a. The reviewer should proceed topic-by-topic through the outline (Figure 3-8), comparing the text and illustrations of the activity under review with the specification requirements as summarized in the outline. He should refer to the Task Descriptive Worksheets as sources of specific information in making the comparison. For each outline topic the activity should be reviewed for completeness (i.e., all required information from the Task Descriptive Worksheets are present in

TOPIC	COMPLETENESS AND ACCURACY CHECK	SPECIFICATION COMPLIANCE CHECK
Preliminary Information Pages		See Figure 6
1. Activity Title	Preliminary Information Worksheet (PIW) Section 6	3.3.3.5.a
2. Section Heading	See Figure 6 of specification	3.3.3.5.b
3. Introduction	PIW Section 15	3.3.3.5.c
4. Applicable Serial numbers	PIW Section 7 for all tasks	3.3.3.5.d
5. Special Tools and Test Equipment	PIW Section 8 for all tasks	3.3.3.5.e
6. Supplies	PIW Sections 9 and 11 for all tasks	3.3.3.5.f
7. Personnel Required	PIW Section 10 for all tasks	3.3.3.5.g
8. Equipment Conditions	PIW Section 12 for all tasks	3.3.3.5.h
9. Notes, Cautions, Warnings	PIW Section 13 for all tasks	3.2.14.3 and 3.3.3.6.a.4
10. Activity Index	Index includes name and page number for each task in activity	3.3.3.5.i
11. Replacement Parts	PIW Section 14	3.3.3.5.j
Maintenance Instruction Frames		See Figure 8 for example
12. Activity Title	See Preliminary Information Page Title	
13. Task Title	See Activity Index	3.3.3.5.a
14. Task Steps	Detailed Step Description Worksheet (DSDW) Section 6	3.3.3.6.a and 3.3.7.3
15. Keying Text to Illustrations	Check callouts in text against callouts on illustrations. Use DSDW and attached art for review.	3.2.15.12
16. Layout of Text and Illustrations		3.3.3.6.d
17. Illustration Quality		3.3.7.4.c
Front Matter		
18. Front Matter		3.3.7.2 except that the cover will not be reviewed

Figure 3-8. Review Outline

the activity); accuracy (i.e., the meaning of the information contained in the activity should be the same as that contained in the source documents); and compliance with the draft specification (i.e., the format in which the information is presented should correspond to the format requirements as summarized in the outline). Upon completion of the review of each activity all activity indexes should be checked against the ATIM to verify that each task with a "B" or "J" entry appears by itself or as part of a multi-task activity.

b. Notes for using the outline (Figure 3-8). The outline is divided into three columns. The first column lists 18 topics arranged in a sequence designed to facilitate the review of an activity. Topics 1 through 17 cover every important item from the Preliminary Information Page to the last maintenance instruction frame. Topic 18 has been included to aid in the review of front matter for each Maintenance Instruction Manual volume. The outline contains a second column comprised of notes and references applicable to the accuracy and completeness check. Information in the activity should be checked against the information sources listed in this column to be sure that all information has been accurately included in the activity. The third column provides references for checks for format and content compliance with the specification. The notes in the second and third columns are self-explanatory except for the following:

(1) If the note "for all tasks" appears along with a reference to one of the Task Descriptive Worksheets in the completeness and accuracy column this means check the category of information for all tasks in the activity. For example, Item 7 in the Preliminary Information Worksheet must be checked for all tasks in the activity to assure that all serial numbers to which the activity is applicable are included under "Applicable Serial Numbers" on the Preliminary Information Page.

(2) Where a number appears without further identification in the specification compliance column it refers to the draft specification in Volume I of this technical report. Figure numbers, likewise, refer to the specification.

3.10 Job Guide Validation

3.10.1 Recommended Personnel Type. Technician/Observer.

3.10.2 Overview. The specification requires 100 percent validation of Job Guides. "Table-top" validation, sometimes considered acceptable for conventional technical data, is not adequate to establish

the technical quality of JPA. "Hands-on" performance of the tasks, using the JPA, is necessary to demonstrate JPA validity.

3.10.3 Arranging for Validation. Section 4.4 of the specification deals in detail with requirements for arranging, conducting, and documenting validation. The magnitude of the problem of arranging for "hands-on" validation is to some extent a function of the size of the system for which Job Guides are written, and the number of people who will be inconvenienced while the hardware is tied up. It is demonstrably more difficult to get an aircraft taken out of service and committed to several days of "unproductive" JPA validation on the flightline than it is to get a small motor-generator from a production line to carry away for validation in the contractor's shop. As soon as it becomes possible to estimate dates when activities will become available for validation, the Procuring Agency should be notified of the starting date, duration, and support equipment requirements. If expendable materials will be needed, arrangements must be made for the proper amounts to be on hand. If support from Air Force or hardware contractor maintenance personnel will be required, individuals should be identified and assigned for the planned time.

3.10.4 Conduct of the Validation. The specification (4.4.9) requires 100 percent validation of procedural task steps. Every procedural step of every activity should be performed exactly as described in the Job Guide text, using all tools, test equipment, and supplies called for by the book. The individual performing a task for the purpose of validation should not be the individual who wrote the procedure, but it is useful for the writer to be present to note deviations from the intended procedure. When the performance of a task step fails to achieve the desired outcome, or when the observer notices the step being performed in error, a judgment should be made on the spot about the cause of the error, and a procedural correction should be formulated and validated before the validation is resumed. All procedural changes must be recorded and effected before the preliminary manuals are submitted for verification.

SECTION IV

FULLY PROCEDURALIZED TROUBLESHOOTING AID DEVELOPMENT

4.1 Overview

The specification in Volume I of this report requires that Checkout Procedures and Action Trees be based on the equipment data flow and employ the most efficient strategy given a particular data flow. The purpose of this section in the handbook is to provide a proven method for efficiently developing the information necessary to prepare the Checkout and Action Trees required by the specification, and also to create the necessary intermediate products, as depicted in Figure 4-1.

There are several concepts upon which the method is founded; they are as follows:

a. Each hardware component with a place in the data flow is related to one or more hardware output(s).

b. Each of a component's failure modes (3.4.2.4 in the specification) may cause a different malfunction symptom (3.4.2.3).

c. All components which produce the same malfunction symptom must be considered as possible causes of the malfunction.

A Checkout Procedure contains two elements.

a. The straight-line checkout (SLC), which checks each of the hardware items outputs.

b. Symptom-pattern completion, which identifies all the possible malfunction symptoms associated with each negative outcome in the straight-line checkout. Symptom pattern completion then completes identification of each malfunction symptom and establishes the set of possible causes to be dealt with by the associated Action Tree.

The first step in preparation of fully proceduralized troubleshooting is to associate components through their failure mode(s) to a malfunction symptom.

4.2 Recommended Personnel Qualifications

The following qualifications are recommended for individuals performing all operations in this section.

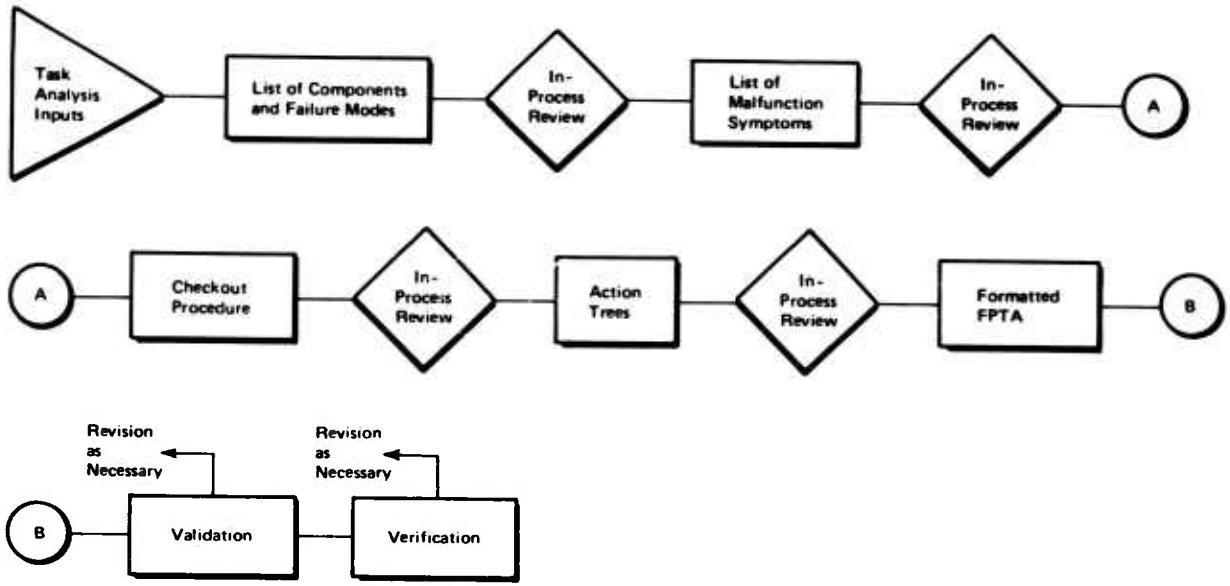

Figure 4-1. FPTA Development Process

4.2.1 Technician. A technician with at least 3 years of experience in a position of primary (key) responsibility for maintaining the operational readiness of similar military or government equipment. The technician should have extensive experience in performing corrective maintenance activities on such equipment, including troubleshooting and repair.

In addition, he should have satisfactorily completed a minimum of one year of college training relevant to critical reading and writing, or have demonstrated an equivalent ability.

4.3 Develop List of Components and Failure Modes (LCFM) and List of Malfunction Symptoms

4.3.1 Develop List of Components and Failure Modes. Figure 4-2 represents the suggested format for a working document, which when completed will contain all malfunction symptoms and a listing of each component's failure modes (3.4.3 and 3.4.4 in the specification).

To complete the analysis using Figure 4-2, perform the following steps:

a. Enter the component's name and reference designator from the ATIM. Each component checked in the ATIM as "found in troubleshooting" that is part of the hardware item to be troubleshot must be listed. It is recommended that all information for each component on the form be completed before entering the next component, to ensure that adequate space is available to complete the form. (Some components have more than one failure mode or are related to multiple outputs.) When the form is completed, it should be checked against the ATIM to ensure that no components were accidentally omitted.

b. Identify and list the related outputs. Examine hardware item drawings, schematics, and operating principles to determine which outputs are related to the component. Related outputs may be determined by theoretically removing the component from the hardware item and by observing which of the hardware item's outputs are affected (or are downstream of the component in the data flow).

c. Enter the component's failure modes (3.4.2.4 in the specification).

d. Enter the names of all outputs that would be incorrect as a result of each failure mode and describe the way in which the output would be measurably incorrect. Each failure mode of a component represents some physical change in the

Component Name	Reference Designator	Related Outputs	Failure Modes	Outputs Affected and Nature of Change

Figure 4-2. Format for Failure Mode Analysis

properties of the component (e.g., a broken piece of linkage). Hypothesize the effect of this physical change (in the component's nature) on the system data flow and note the adverse effects on downstream outputs.

For example, if a connecting linkage were configured in a "Y" with an output connected to each branch of the "Y" and the input connected to the main stem, it would be possible for each branch to break separately and disable only one of the outputs or for the main stem to break and disable both outputs.

Figure 4-3 depicts a simple mechanical system using the "Y" connecting link to simultaneously pull two flags in front of two windows.

Figure 4-4 illustrates the correct association of a component (the "Y" Link) to its malfunction symptoms.

Note that in Figure 4-4 the description of the affected outputs contains three different malfunction symptoms.

In Figure 4-5, some additional components of the mechanical system shown in Figure 4-3 have been added to the failure mode analysis to illustrate how several components may be related to the same malfunction symptom.

4.3.2 Develop List of Malfunction Symptoms. Notice that the "Y" link's failure modes produce one symptom that is unlike any of the others and two other patterns that are the same as those produced by the strings. In this example, when "the B flag doesn't move when key is depressed" both the "Y" link and string B are possible causes. When the form is completely and accurately completed it contains all possible malfunction symptoms. The possible causes of any symptom are all of the components for which the symptom is listed.

The completed form (Figure 4-2) will meet the requirements for a List of Components and Failure Modes. The next step is to sort the malfunctions in the right-hand column and list every unique symptom. In the example noted above, there were three unique symptoms: The first symptom could be caused only by the "Y" link, but both the link and one of the strings were possible causes of the other two symptoms. Finally, list for each symptom all components that could cause the symptom.

4.4 Develop the Checkout Procedure

4.4.1 Overview. The Checkout Procedure contains two separate elements: The straight-line check and the symptom-pattern

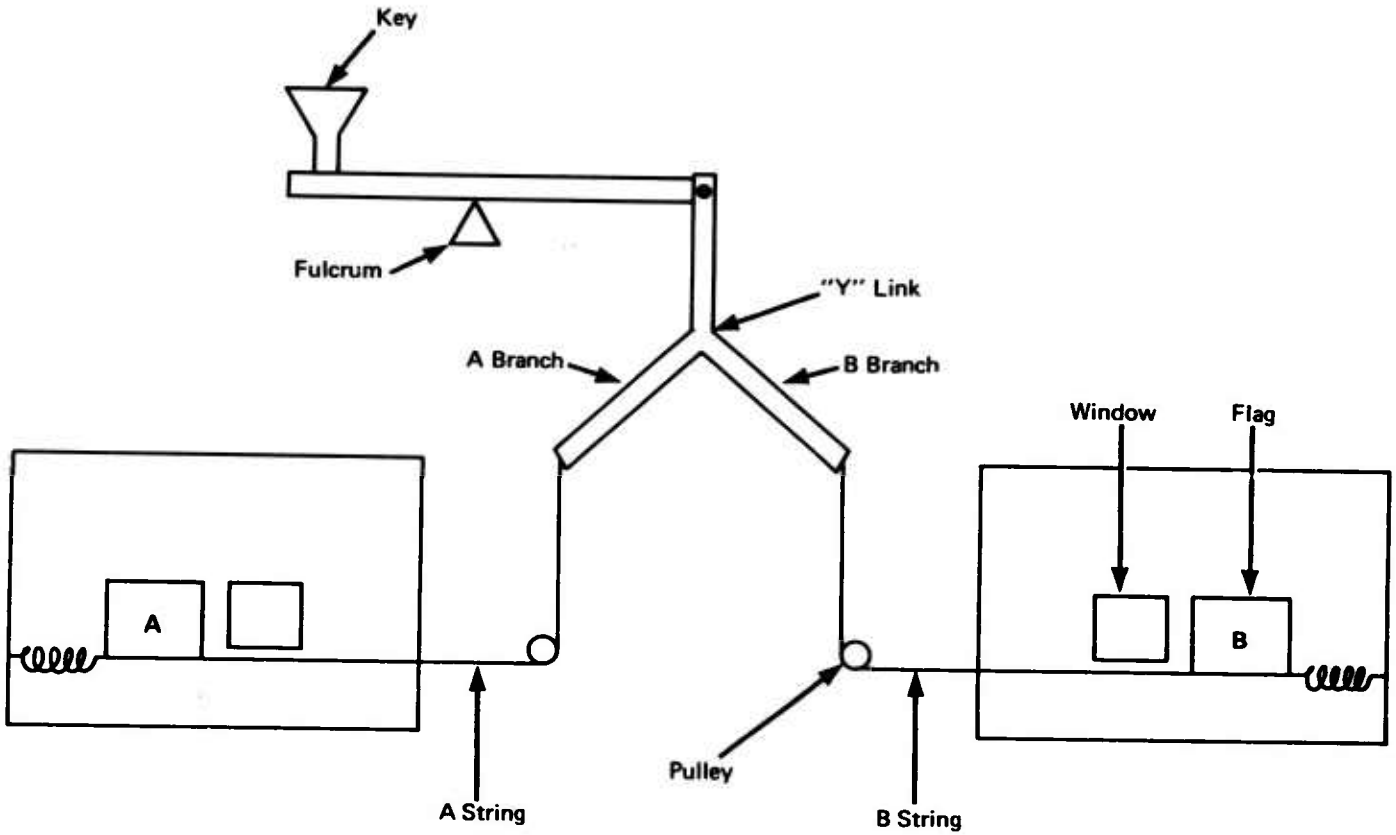

Figure 4-3. Mechanical System for Illustrative Purposes

Component Name	Reference Designator	Related Outputs	Failure Modes	Outputs Affected and Nature of Change
"Y" Link	Y-LNK-1	A & B	Break main stem	A & B - flags don't move when key depressed
			Break A branch	A - the A flag doesn't move when key depressed
			Break B branch	B - the B flag doesn't move when key depressed

Figure 4-4. Sample Failure Mode Analysis

Component Name	Reference Designator	Related Outputs	Failure Modes	Outputs Affected and Nature of Change
String A	ST-1	A	Break	A - the A flag doesn't move when key depressed
String B	ST-2	B	Break	B - the B flag doesn't move when key depressed

Figure 4-5. Sample Failure Mode Analysis Continued

completion. The straight-line check has two important functions, which are to:

a. Note the condition (in or out of tolerance) of all hardware item outputs.

b. Establish the system state (data flow configuration) prior to each test of an output.

In preparing the checkout, the straight-line checks obviously come first and provide the necessary foundation for symptom-pattern completion. The symptom-pattern completion will identify all malfunction symptoms and provide reference to the action tree which will solve the problem.

4.4.2 Straight-Line Checkout (SLC). The hardware item's normal operating procedure(s) should provide the sequence for the SLC (3.4.5.2 in the specification). For an existing system, normal operating procedures may be found in system technical manuals and/or may be available through the operator training facility. In a developing system at any given point in time, the hardware designers have the responsibility for establishing the start-up and operating sequences.

Generally speaking, the SLC should test the hardware item as quickly and efficiently as possible. This objective is usually achieved by:

a. Using checks early in the procedure that take advantage of front panel indicators and BITE (3.4.5.2.a in specification). Tests requiring connection of external test equipment should appear late in the checkout, since these tests are more difficult and take longer to perform. The BITE tests may also reduce the required number of external tests.

b. Checking outputs which are common to more than one system state in the most cost-effective configuration to test (i.e., considering required test equipment, location, access, test difficulty, etc.).

Figure 4-6 represents a familiar system. Let's trace a typical FPTA development through the SLC preparation for this system.

Note that Figure 4-6 contains a statement of the existing input conditions. All of the test/decision results in the SLC and associated action trees depend upon the availability of those inputs. Equipment input conditions must be specified (and noted) prior to SLC development.

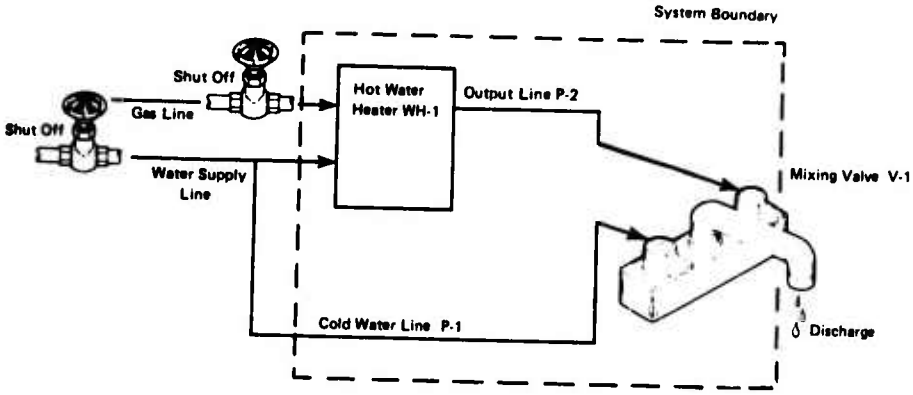

Input conditions:

1. Adequate gas pressure is available to system
2. 60PSI water supply available to system
3. Water heater thermostat set to 135° F.

Figure 4-6. Hardware Item Flow Diagram, For Illustrative Purposes

Figure 4-7 represents the association of components with malfunction symptoms for this system. Note that all components exhibit more than one failure mode and that several components may cause more than one malfunction symptom. Also note that the requirement for a list of components and failure modes is satisfied by the figure. Figure 4-8 is a list of Malfunction Symptoms for the example system.

Steps 1 through 8 in Figure 4-9 represent a SLC for the example system. Steps 3, 4, and 7 are the test/decision steps which check all system output parameters. Steps 1, 2, 4, and 6 are procedural steps which reconfigure the system data flow and permit further testing. Step 8 restores the system to the standard at-rest configuration.

We must conclude, if Steps 1 through 8 in Figure 4-9 are performed and the results of Steps 3, 4, and 7 are affirmative, that the system is completely checked and all outputs are within tolerance. Thus the objectives of the SLC are met.

4.4.3 Symptom Pattern Completion. The symptom pattern(s) for each negative outcome in the SLC must be completed by: reconfiguring the hardware item data flow (by repositioning operating controls), and subsequent testing, to identify each of the possible malfunction symptoms. Once a malfunction symptom is completely identified, reference is made to the action tree which will be written to isolate the malfunctioning component from the list of components associated with the malfunction symptom. If there is only one possible cause of the symptom, a repair or replace instruction may be provided in the checkout.

The sequence of tests employed in symptom pattern completion should follow the guidelines suggested above in paragraph 4.4.2 (a & b).

The sample checkout in Figure 4-9 has handled all four symptoms in the following way:

a. Affirmative checks at Steps 3, 5, and 7 constitute successful completion of the checkout.

b. Affirmative outcomes at 3 and 5 and negative at 7 (cold and hot pressures OK, temperature bad) is symptom number 3. Symptom 3 has only one cause, so the "replace" instruction appears here in the checkout.

c. Affirmative at 3 and negative at 5 (only hot pressure bad) is symptom number 1. An Action Tree reference is provided.

Component Name	Reference Designator	Related Outputs	Failure Modes	Outputs Affected and Nature of Change
Hot water heater	WH-1	Hot water at discharge	Water flow obstructed	Hot water - not available at discharge or low pressure
			Leaking	Hot water - not available or low hot water pressure
			Proper output temperature not maintained	Hot water - incorrect water temperature at discharge
Output line	P-2	Hot water at discharge	Obstructed	Hot water - not available or low pressure
			Leaking	Hot water - not available or low pressure
Cold water line	P-1	Cold water at discharge	Obstructed	Cold water - not available or low pressure
			Leaking	Cold water - not available or low pressure
Mixing valve	V-1	Hot and cold water at discharge	Hot water side obstructed	Hot water - not available or low pressure
			Hot water side leaking	Hot water - not available or low pressure
			Cold water side obstructed	Cold water - not available or low pressure
			Cold water side leaking	Cold water - not available or low pressure
			Outlet obstructed	All flow - not available or low pressure
			Outlet leaking	All flow - not available or low pressure

Figure 4-7. Failure Mode Analysis for Illustrative Purposes

Malfunction symptoms	Possible causes
#1 H.W. not available or low pressure	WH-1, P-2, V-1
#2 C.W. not available or low pressure	P-1, V-1
#3 Incorrect H.W. temperature	WH-1
#4 All flow restricted or low pressure	V-1

Figure 4-8. List of Malfunction Symptoms

SLC

1. Set HOT and COLD Mixing Valve controls to OFF.
2. Connect Pressure Gauge to discharge.
3. Set COLD control to ON. Check that Pressure Gauge indicates between 59.9 and 60.1 PSI. If not, go to step 9.
4. Set COLD control to OFF. Disconnect guage, allow pressure to bleed off. Reconnect Pressure Gauge.
5. Set HOT control to ON. Check that Pressure Gauge indicates between 59.9 and 60.1 PSI. If not, go to step 21 (Action Tree for Symptom #1).
6. Set HOT control to OFF. Disconnect Pressure Gauge.
7. Set HOT control to ON. Place bulb end of thermometer in hot water discharge. Check that thermometer indicates between 130 and 140° F. If not, replace WH-1 and go to step 1.
8. Set HOT control to OFF.

CHECKOUT ENDS HERE

SPC

9. Set COLD control to OFF. Disconnect gauge, allow pressure to bleed off. Reconnect Pressure Gauge.
10. Set HOT control to ON. Check that Pressure Gauge indicates between 59.9 and 60.1 PSI. If not, go to (Action Tree for Symptom #4).
11. (This will be the first step in the Action Tree for Symptom #2.)

Figure 4-9. Checkout Procedure for Illustrative Purposes

d. A negative outcome at Step 3 requires a branch to a point beyond the end of the SLC for completion of the pattern without disruption of the SLC. Another negative at step 10 identifies symptom number 4 (both hot and cold pressures bad). An Action Tree reference is provided.

e. A negative outcome at 3 and positive at 10 (only cold pressure bad) indicates symptom number 2, so step 11 should be the first step in the Action Tree for symptom number 2.

4.5 Develop Action Trees

4.5.1 Overview. An action tree is prepared for each malfunction symptom identified and referenced by the checkout procedure. The action tree must be written to isolate any of the components that can cause the malfunction symptom. The action tree determines which component has malfunctioned through further manipulations of hardware item data flow written as procedural steps, further component and parameter testing written as test/decision steps, and component replacement written as replacement steps as require in 3.4.6.1 a, b, and c in the specification.

4.5.2 Develop a Component Block Diagram. If there is an existin energy flow diagram (schematic representation of functional relationships among components in the system), such a diagram may be used. If such a diagram is not available, prepare a schematic diagram that depicts the energy flow relationships among all of the components listed as possible causes of the malfunction sympt for which the Action Tree will be prepared.

4.5.3 Develop the Test Sequence. Write Test/Decision Steps as necessary to complete the Action Tree. Develop the branching Act Tree by choosing test instrument, type of test, and location of t for each Test/Decision step (3.4.6.1.c of the specification). Re to the Test Equipment and Tool Use Form. Items on this list are officially authorized for use by maintenance personnel. Selectio of test instruments is thus limited to those items found on this form. The form will also provide a list of the test equipment settings that must be specified whenever special test equipment is called for.

Selection of the correct test locations is of primary importa Test locations should be selected in such a way as to divide the blocks on the component block diagram into two segments with equal

(as nearly as possible) probability of containing the malfunction. For the component block diagram shown below, assuming for the

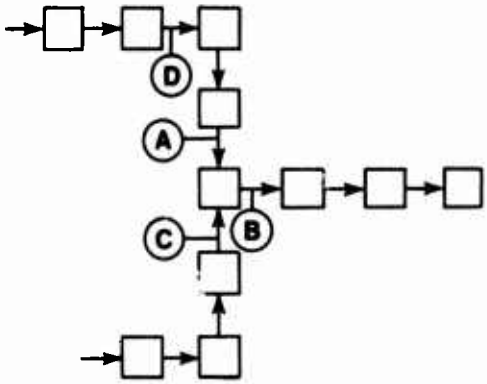

moment that all components have equal failure probability and are equally accessible, the first test location would be at point (A) since the choice permits dividing the components most nearly in half. No other test point permits better than an 8-3 split. If a "good" indication is found at (A), the second test should be at (B) or (C). If a "bad" indication is found at (A), the second test should be at (D). Each check eliminates about half of the components from consideration. These components are known to be "good." The choice of test location between the suspect components should be such that the check be made at the mid-point of the chain, and each succeeding check be made at the mid-point of the remaining portion of the chain. Thus, assuming each component has an equal probability of failure, the branching proceeds by halfing the probabilities that the malfunctioning component lies on one side or the other of the check. This strategy defines the half-split technique of troubleshooting.

The pure half-split technique described above is seldom the most economical for 100 percent of the checks, because of practical constraints. The half-split strategy should be modified by introducing the following considerations:

a. Reliability. Checks for items with high failure rates should precede checks for items with lower failure rates.

b. Accessibility. Checks that are "quick and easy" should precede checks that involve extensive or time-consuming disassembly.

c. Probability of Malfunction Introduction. Those checks which involve activities with high probability of accidental malfunction introduction should be deferred toward the end of the procedure. Whenever a static check (power off) and a dynamic check can reveal roughly the same diagnostic information, the static check is preferred.

d. Location of the Technician. Other things being equal, the sequence of checks should minimize the movement of the technician from one location to another.

e. Test Equipment Setup. An unusually time-consuming test equipment setup should be weighed against information gained from the use of the equipment to consider whether its use should be presented earlier or later in the check sequence.

Include procedural steps where changes in equipment condition are required to permit a check, when method of access must be specified, or when test equipment settings must be specified. Refer to the Test Equipment and Tool Use Form each time a procedural step calls for the use of a special tool or piece of test equipment. Be certain that the procedural steps contain all control settings or other operating instructions required by the form each time a special tool or piece of test equipment is used.

Include a Repair or Replace step at the end of each Action Tree branch. Identify the malfunctioning component as required by 3.4.6.1.b of the specification.

4.5.4 Example of an Action Tree Development. Examination of Figure 4-9 and Figure 4-6 tells us that malfunction symptom #1 is isolated in step 5 of Figure 4-9. According to Figure 4-7, the resulting action tree must determine whether WH-1, P-2, or V-1 is the cause of malfunction.

The first step in Action Tree development is to devise a series of checks following the modified half-split troubleshooting strategy. In the sample system illustrated in Figure 4-6, two tests are required to completely test the related components. Assuming that in this case the probability of failure is equal for the three components, we will elect to test at WH-1 first, since its connections are exposed and V-1's connections are not. Considerations such as possible malfunction introduction and test equipment setup apply uniformly in this case since the same test will be performed at two locations. While the location of the technician does change if we test at WH-1 first, the minor inconvenience associated with moving is offset by the easier access to the point of test.

Figure 4-10 represents the completed Action Tree referred to by Step 5 of Figure 4-9.

AT

21. Set HOT control to OFF. Disconnect Pressure Gauge.

22. Shut OFF gas to WH-1.

23. Shut OFF water supply.

24. Set HOT control to ON. Allow pressure to bleed off.
Set HOT control to OFF.

25. Disconnect P-2 from WH-1. Connect Pressure Gauge to WH-1 outlet.

26. Turn water supply ON. Check that the Pressure Gauge indicates between 59.9 and 60.1 PSI. If not, go to Step 33.

27. Shut OFF water supply. Disconnect Pressure Gauge from WH-1.
Reconnect P-2 to WH-1.

28. Disconnect P-2 from V-1. Connect Pressure Gauge to P-2.

29. Turn ON water supply. Check that Pressure Gauge indicates between 59.9 and 60.1 PSI. If not, go to Step 31.

30. Shut OFF water supply. Disconnect Pressure Gauge. Replace V-1 and go to Step 32.

31. Shut OFF water supply. Disconnect Pressure Gauge. Replace P-2 and go to Step 32.

32. Reconnect P-2 and V-1. Turn water supply ON, go to Step 1.

CAUTION

33. Shut OFF water supply. Replace WH-1. Be sure to reconnect P-2 before turning water supply ON.

34. Turn Water supply ON. Go to Step 1.

Figure 4-10. Action Tree for Illustrative Purposes

By reading the Action Tree we find 3 different paths through it, one to each possible malfunctioning component. The paths are:

A. Steps 21, 22, 23, 24, 25, 26, 33, 34, lead to WH-1.

B. Steps 21, 22, 23, 24, 25, 26, 27, 28, 29, 30, 32, lead to V-1.

C. Steps 21, 22, 23, 24, 25, 26, 27, 28, 29, 31, 32, lead to P-2.

Note that the Action Tree contains the information required by 3.4.6.1 in the specification and that the strategy employed conforms to 3.4.6.2 in the specification.

4.5.5 Action Tree Review for Completeness. The contractor must be able to demonstrate during an in-process review (IPR) that each Action Tree has a repair or replace action for every component listed as a possible cause of the malfunction symptom for which the Action Tree was written.

4.6 Checkout and Action Tree Validation

4.6.1 Overview. The specification (4.4.10) requires that, with few exceptions, checkouts and action trees be completely validated by actual task performance and physical simulation of all component failure modes.

4.6.2 Process

a. A simulated malfunction must be designed for each component found by the action tree. The simulated malfunction must be functionally the same as the actual mode of failure. It also must be physically located in an identical position within the energy flow. For example, if the component and mode were a "hydraulic line - broken," the simulated malfunction might be a fitting and a valve which would allow bleeding a controlled amount of fluid off to simulate a break until the malfunction symptom occurred. The correct physical location would be in the line itself.

b. Tolerances for power supplies and checks of individual components independent of their data flow context may be entered in the checkout procedures and action trees in accordance with 3.4.6.3.a, b, c, and d of the specification.

c. For all operating parameters of the assembly under test, the tolerance range must be determined empirically, by simulating

the malfunction. Suppose that, in the above example, the hydraulic system fluid capacity was 5 gallons, the malfunction symptoms occurred at 3 gallons, and the bleed-off was stopped at 2.8 gallons. In this example, the lowest value in the tolerance range would be obtained by returning very small amounts of fluid, rechecking for the malfunction symptom each time until it disappeared, then taking the fluid level measurement. The accuracy in this case is dependent on the quantity of fluid added each time. Accuracy in excess of 95 percent should be the goal in all cases.

d. The designer of the simulated component malfunctions should avoid any possibility of designing a destructive malfunction. Destructive malfunctions are characteristic of components that generate new energy forms. The method recommended for detecting destructive malfunctions is to analyze the energy generator and its design characteristics to see if it can tolerate the overload or overrating that it may be subjected to, given the type of component malfunction simulation required. If it can tolerate the malfunction, continue with the simulation procedure. If the malfunction is clearly destructive, terminate the procedure and record the manufacturer's tolerance data.

e. An alternative approach to avoiding damage from a destructive malfunction is to use an appropriate indicating device to display the aspects of the energy generator's output which are subject to overload or overrating. Insert the potentially destructive simulated malfunction to the degree that causes the energy generator to be subject to 100 percent of its design load or rating. Quickly perform the measurement required by the Test/Decision step and deactivate the simulated malfunctioning component.

The second type of destructive malfunction is an accidental (and possibly undetected) damaging of the hardware. The method of minimizing this is to use extreme care when working with energized equipment. Another is to perform an operational check-out after each simulated malfunction has been removed.

4.6.3 <u>What Must Be Demonstrated by Validation</u>. The records maintrained during validation must provide evidence that:

a. Every component failure mode found in an Action Tree produces, in the checkout procedure, the symptom for which the Action Tree was written.

b. The Action Tree logic isolates every component for which the tree was written.

c. The tolerance range for all operating parameters has been empirically established, unless it can be shown that the necessary malfunction simulation would be destructive.

d. All procedural steps have been followed in the process of validating the procedures, and have been demonstrated to meet the same criteria as those established for job guide validation (4.4.9 of the specification). Exceptions to 100 percent hands-on validation of action trees must qualify under 4.4.10.b of the specification.

SECTION V

QUALITY AND ACCURACY ASSURANCE

5.1 Overview

In the preparation of standard technical orders on technically complex equipment, the number of details that can be incorrect approaches infinity. This is even truer in the preparation of JPA manuals because the depth of coverage is greater, the level of detail is greater and much more analysis and writer research is necessary. Many types of errors or omissions by the writer, typist, or illustrator can be extremely costly and time consuming to find and correct. As the writer constructs the logic of an action tree, for example, a simple misconception may have a "ripple effect" on many other procedural steps. Similarly, a changed or incorrect reference not caught early enough can have serious effects later.

Experience shows that in conventional technical orders and, of course, in JPA production, even the most knowledgeable and qualified writers, illustrators, and typists will make errors that may not be caught in their normal checking. It is the task of competent quality control personnel to catch these errors and to prevent their propagation into other data. The quality control personnel must also eliminate quality deficiencies during the entire preparation and production cycle.

A dedicated quality and accuracy assurance (QA) program for JPA manual preparation must also establish the standards against which the quality of the JPA products will be measured as they are being developed. For example, the program must address and define:

a. The various kinds of inspections to be accomplished
b. The responsibilities for evaluating quality and accuracy
c. Means of recording and controlling quality control procedures
d. Means for solving problems of deficiencies in quality.

Merely being able to point out unacceptable data does not accomplish quality assurance; there must also exist an ongoing organizational approach to correcting the procedural deficiencies that create unacceptable data.

The contractor's Quality Assurance Plan must be designed to ensure both quality and accuracy in the finished product. This section describes the organization, procedures, and personnel

necessary to monitor all stages of a project: planning, development, inspection, review, validation, verification, and final production. Format, typography, and art are three areas which require substantial QA attention. Even more vital is the technical accuracy, completeness, and substance of JPA products. It is, therefore, vital for the contractor to be sure that his quality control organization is adequately staffed with personnel qualified to evaluate both production and technical quality.

This Section provides sets of QA guidelines for the contractor. First, it discusses the content of the Quality Assurance Plan that he must prepare for the Procuring Agency to explain his understanding and intended plans for JPA quality and accuracy assurance. Next, it provides a description of the recommended organization and responsibilities of the contractor's quality assurance personnel. The control of technical accuracy in intermediate and final products is described and then the basic requirements of production quality control is explained. Finally, the guidelines for the involvement of QA personnel in the processes of contractor validation and government verification are provided.

5.2 JPA Quality Assurance Plan

When the JPA Quality Assurance Plan is contractually required by the Procuring Agency, its purpose is to assure the customer that the contractor has all of the requisites for a thorough and successful JPA development program. As emphasized throughout this handbook, the JPA specification requires significantly greater discipline and depth of detail than are required in development of conventional technical orders. As a result, even a quality assurance organization that is experienced in controlling conventional military technical manuals programs may require considerable organizational and procedural adjustment in order to control the quality and technical integrity of JPA manuals. If the contractor does not have an ongoing publications QA capability, the task of assembling one which will satisfy all contractual requirements of JPA and ensure its success is a significant one.

Note that Quality Assurance Plans are given serious consideration by the Procuring Agency, because they reflect the contractor's knowledge and capability to perform the complex JPA development task. Plans that are too general in content to address the specific quality control problems of JPA preparation are symptomatic of a lack of attention by a contractor to the importance of quality assurance. Such plans will be considered unacceptable by the Procuring Agency.

For a firm without a formal QA structure, the QA Plan must provide substantive detail in explaining the contractor's understanding of the

JPA Specification and its writing, illustrating, validation, and other quality requirements. It must explain how the contractor will select personnel to perform QA on technical literature, their background for the assignment, and the organizational support they will receive in their task.

Elaborate or costly QA Plans are neither anticipated nor desired. Artwork should consist of neat, readable pencil sketches. In order to decrease the cost of preparation of the plan, avoid the use of binders, heavy cover stock, boilerplate text and elaborate illustrations.

As indicated in the specification, receipt of the QA plan by the Procuring Agency is required within fifteen days after contract award. This is necessary because work on the JPA intermediate products must begin very early in the contract to ensure timely completion. To ensure against costly false starts, the QA Plan should be reviewed and approved by the Procuring Agency before the research and task analysis by writers begin in earnest. Note that if the plan as first submitted is unacceptable to the Procuring Agency, contract schedules must still be met, so it is incumbent on the contractor to plan, organize, and describe a thorough QA organization immediately upon award.

Copies of the approved plan should be distributed to all potential participants in the JPA development program so that each can become familiar not only with his expected role, but also with the fact that all of his products will be subjected to thorough QA inspections. Thereafter, each participant should use his copy of the plan as a guide to quality assurance procedures.

5.3. Quality and Accuracy Assurance Organization

Ideally, a contractor for a JPA development program should have an existing QA department that is an arm of management and is independent of the department responsible for JPA development. The QA department ensures that problems of quality and accuracy are found and corrected early enough to forestall schedule delays and cost increases, i.e., long before they appear in a deliverable document. In this way the contractor ensures that his product reflects a constant level of high quality and technical accuracy.

Even an existing, knowledgeable QA organization can prove inadequate in ensuring JPA writing and production quality if it is oriented toward random surface checks or sampling the data for minor inconsistencies and errors. In order to forestall quality and accuracy problems, a contractor should review the type of publications work its QA department normally controls and compare their normal findings with the detailed JPA specification and review requirements set forth in the specification and this handbook.

Whether the quality control personnel are permanent, full-time employees of the QA department or are temporarily assigned, they should should be carefully selected to perform their important roles. A JPA manual reviewer should be conscientious, meticulous with regard to detail, and convinced of the importance of the QA function to a quality product and customer satisfaction. The reviewer should be diplomatic because he will frequently interface with the customer and, as a constant critic, must liaison with publications personnel in a friendly but persuasive manner.

It is important that personnel who will review the technical quality and accuracy be interested more in the technical substance of procedural data than in semi-technical or editorial details. Others can find cross-referencing errors and "typos," but checks for technical quality require that the technical reviewer care about the way in which the procedures instruct the user--do they reflect the best way to perform maintenance, do they indicate the appropriate tools to be used, and do they reflect the most logical approach to troubleshooting. Unfortunately, some technical reviewers are satisfied with their contribution when they find any kind of error. If their time, however, is taken up by inspecting for trivia, a review for substance sometimes occurs only at verification, which is, of course, much too late in the JPA development cycle to be learning that the manual has serious technical deficiencies.

It is essential that the QA staff include well qualified technical personnel who can assess the technical validity of data by means of review of the intermediate and final products, even in the early stages of development. It may, for example, prove necessary to temporarily assign a cognizant engineer to the QA function in order to ensure accuracy of intermediate and final products. Such a technical reviewer should be knowledgeable of the equipment and its maintenance philosophy (test equipment, logistics support, training, etc.), and should be capable of analyzing each step in the JPA development and quickly detecting technical inconsistencies and misconceptions.

All personnel assigned to JPA quality control must be familiar with the entire JPA process and know the purpose of each intermediate product and its effect on final product accuracy, correctness, and completeness. Aside from the technical accuracy reviewer(s), the quality function should include personnel skilled in detailed checking of data so that they can read the material and illustrations for substance and clarity and quickly discern cases where a writer's logic has produced inconsistencies and confusion. Editorial correctness must be checked by personnel trained to test the readability of the procedural writeups against the capability and background of the intended reader/user.

Illustrations are often overlooked in the review for quality. If they seem to adequately portray the equipment and have no apparent

technical errors they may pass the reviewer's test for quality. One illustration may, however, be much less appropriate and helpful to the technician than another which depicts the equipment from a different angle of view or one which contains less detail, or one which is larger in size. As indicated earlier, it is very important that the quality inspector be well-versed in the best techniques and methods of JPA writing and illustrating.

5.4 Quality Control Responsibilities

The quality control function in any company should be a quality "watchdog" rather than a quality producer. All too often, the person originating the material in a publication (e.g., writer, editor, typist, illustrator) stops short of completing his function, because he knows that downstream there is a QA function that will make a thorough check and correct errors. Therefore, he reasons, it is foolish for the originator to spend time checking his own work. This philosophy is applied at its worst when the originator relies on the QA reviewer, who is known to be thorough, to do all his checking, proofreading, etc. If a company QA reviewer knows that the customer reviewer is also thorough and "will find problems anyway" he may cut his QA time and let the customer find all the errors. Admittedly, this "passing the buck" saves time and money for the reviewer but defeats the concept of Quality Assurance and frequently results in customer dissatisfaction.

It is true that the QA reviewer must make a thorough check of the publication for all types of errors, but it is unreasonable to give him unchecked or marginal quality material and expect him to perfect it. If a QA reviewer can establish that an originator has provided a complete document that is relatively devoid of errors, he can spend valuable QA time reviewing the material for substance and content, or moving to another QA task more quickly.

Quality Assurance personnel must be able to communicate their corrections and critiques on the text and illustrations of a manual to the originators in such a way that the types of errors will not recur in future documents. If well-established and understood, the following rules will greatly improve the quality output.

a. QA reviewers should refuse to accept material for review that has not been checked for accuracy and completeness and approved by the originator's supervisor.

b. When the reviewer finds quality and accuracy problems, he should not only explain the inaccuracies and return them to the originator's supervisor but he should also recommend the way in which that type of error could be permanently eliminated. This can be accomplished with QA Review Evaluation Guide

forms (Figure 5-1) that are easy to fill out and which expose and record recurring quality deficiencies. Such forms should be tailored to the type of manual being prepared.

A good practice in improving overall quality is for the QA reviewer to initiate meetings for all originators, so that they understand the various reasons for rejection, and also understand what kind of improvement is needed. At the meetings, discussion and examination of problems will help to prevent them. Good communication between the QA reviewer and the originating writers, editors, typists, and illustrators is helpful in improving quality throughout the program; so, too, are meetings prior to or during the early stages of the preparation cycle. As explained before, the JPA content and format requires much more inspection discipline than do conventional tech orders. The specification often requires modifications to a contractor's existing routines and techniques of presentation and preparation. For this reason, all contributors, supervisors, and quality assurance personnel should meet immediately after award to discuss the specifications, their implications, and their impact on present methods. At that time, recommendations concerning normal procedures that must be revised or adjusted to fit the JPA requirement can be discussed and implemented. Similarly, periodic meetings throughout the program ensure continuing, effective communications and significantly reduce the costly error rate.

5.4.1 Standards and Specifications Quality Control. Although editors or quality assurance reviewers will not become deeply involved until writing has begun in earnest, it is important that the reviewers, the writers, and the illustrators begin to think as a unit with regard to JPA standards and specifications, at the outset of a contract. Supervisors, writers, editors, and illustrators should be introduced to the contract immediately after award. At meetings early in the program, all prospective participants should review the contract and its specifications, particularly recent amendments, waivers, or changes. Discussion of future quality control problems and how they can be avoided should be considered, as well as refinements to procedures, controls, or skills, or increased attention to specific quality areas. All personnel should be expected to maintain an ongoing interest in those aspects of the JPA specifications which are potential quality control problems.

Early in the JPA development program, quality assurance supervisory or review personnel should examine the JPA specification (Volume I of this technical report), and all specifications and standards invoked therein by reference. Some of these requirements may require deviation from normal in-house practice. Writing, editing, and illustrating supervisors should examine each document and note those items which require changes from normal methods. At this time in the program, quality assurance review forms such as the QA Review Evaluation Guide (Figure 5-1) should be prepared and disseminated to all

QA Review Evaluation Guide

Subsystem/Equipment_____ Reviewer(s)_____

Manual Title_____ Date_____

Volume No./Publication No._____

Review Task	Reviewer--Initial & Date			Customer Approved?	Comment
	YES	NO	NA		
1. PTIM was prepared in accordance with (IAW) approved CAPL, including source coded Numerical Index.					
2. PTIM includes all replaceable components.					
3. PTIM reference designators, part codes, and part descriptions are accurate, complete, and comply with 3.2.6.					
4. Each PTIM cell is checked with appropriate repair entries.					
5. Test Equipment & Tool Use Form (TETUF) is based only on customer-approved equipment.					
6. TETUF is filled out IAW 3.2.7.					
7. ATIM is annotated to reflect agreed JPA/Training trade-off (3.2.11).					
8. A Preliminary Information Worksheet (PIW) has been prepared for every "B" or "J" entry in the ATIM.					
9. Each PIW is correctly filled out IAW 3.2.14.					
10. A Task Description and Information Index worksheet (TDII) has been prepared for every "B" or "J" entry in the ATIM.					
11. Each TDII worksheet is correctly filled out IAW 3.2.15.					
12. A Detailed Step Description worksheet has been prepared for every "B" or "J" entry in the ATIM (except as noted in 3.2.17).					
13. Each Detailed Step Description worksheet is correctly filled out IAW 3.2.16.					

Figure 5-1. The QA Review Evaluation Guide

QA Review Evaluation Guide

Subsystem/Equipment _____ Reviewer(s) _____

Manual Title _____ Date _____

Volume No./Publication No. _____

Review Task	Reviewer--Initial & Date			Customer Approved?	Comment
	YES	NO	NA		
14. Each major subsystem is supported by one or more separate volumes of Maintenance Instructions with appropriate front matter.					
15. Customer-assigned publication numbers are used for numbering of Maintenance Instruction manual volumes.					
16. Each section of each Maintenance Instruction volume has an activity title, a section heading, and a Preliminary Information Page.					
17. References from a task step or a note to another task have been checked and are correct.					
18. The Preliminary Information Page of each section is prepared IAW 3.3.3.5.					
19. Frame format is IAW 3.3.3.6.a, b, c, and d.					
20. A separate Inspection Guidelines volume has been prepared for each category of maintenance selected from 3.3.4.1.					
21. Each major subsystem is covered in Inspection Guidelines volumes by its own sections.					
22. A Maintenance Support Information Manual prepared IAW 3.3.5 exists for each series of Maintenance Instruction Manuals.					
23. The format for the Maintenance Support Information manual has been approved by the customer.					

Figure 5-1. The QA Review Evaluation Guide (cont'd.)

QA Review Evaluation Guide

Subsystem/Equipment _____ Reviewer(s) _____

Manual Title _____ _____ Date _____

Volume No./Publication No. _____

Review Task	Reviewer--Initial & Date			Customer Approved?	Comment
	YES	NO	NA		
24. An Index has been prepared IAW 3.3.6 and has been checked for completeness and accuracy of references and the Troubleshooting Data Coverage Plans.					
25. Job guide title pages comply with MIL-M-38784.					
26. A List of Effective Pages has been prepared IAW MIL-M-38784.					
27. The Job Guide Table of Contents has been prepared and formatted IAW 3.3.7.					
28. Job guide text has been edited to ensure that the writing requirements of 3.3.7.3 have been complied with and corrected as necessary.					
a. Second person imperative mood employed.					
b. Sentence structure IAW 3.3.7.2.b.					
c. Only verbs from the standard verb list or new, customer-approved verbs are used in text.					
d. All nouns and nomenclature are IAW 3.3.7.3.d, e, and f.					
e. Where task steps are similar, standard statements are prepared and utilized, except for unique data.					
f. Job guide text has been edited for compliance with rules of capitalization, numbers, and colerances in 3.3.7.3.h, i, and j.					
g. Job guide text has been edited for proper referencing, maximum number of sentences (3), maximum words per step (30), and maximum words per sentence (15).					

Figure 5-1. The QA Review Evaluation Guide (cont'd.)

QA Review Evaluation Guide

Subsystem/Equipment_____ Reviewer(s)_____

Manual Title_____ Date_____

Volume No./Publication No._____

Review Task	Reviewer--Initial & Date			Customer Approved?	Comment
	YES	NO	NA		
h. Warnings, Notes, and Cautions are IAW MIL-M-38784.					
i. Where tasks involve more than one technician, instructions are written IAW 3.3.7.3.a.					
j. The completion of every activity is indicated by an END OF ACTIVITY notation.					
29. Only line art illustrations have been used.					
a. Each illustration is properly logged in an art file.					
b. Each illustration is identified on the page by its identifying file number.					
c. Illustration quality is IAW 3.3.7.4.c and d.					
d. Equipment is illustrated IAW the actual technician's proper perspective.					
e. Arrow styles and callouts in illustrations are IAW 3.3.7.4.i, j, k, and l.					
30. Typography of text and artwork complies with 3.3.7.5.					
Fully Proceduralized Troubleshooting Aids (FPTA)					
31. A Checkout Procedure has been written for every Checkout/Troubleshoot cell entry in the ATIM.					
32. The number of components in the ATIM that are checked in the "Found in Troubleshooting" column equals the sum of the number					

Figure 5-1. The QA Review Evaluation Guide (cont'd.)

QA Review Evaluation Guide

Subsystem/Equipment_____ Reviewer(s)_____

Manual Title_____ Date_____

Volume No./Publication No._____

Review Task	Reviewer--Initial & Date			Customer Approved?	Comment
	YES	NO	NA		
of components listed in the List of Components and Failure Modes for all Checkout/Troubleshoot tasks.					
33. The List of Malfunction symptoms includes all symptoms that can occur during startup or operation for each checkout task.					
34. All active outputs of a hardware item are checked by its checkout procedure.					
35. There is an Action Tree for every malfunction symptom.					
36. Action trees are prepared IAW 3.4.6.					
Validation					
37. The ATIMhas been validated IAW 4.4.7.					
38. The TETUFs have been validated IAW 4.4.8.					
39. The text and illustrations for every Job Guide have been completely validated on the actual equipment IAW contract requirements and the criteria explained in 4.4.9.					
40. The checkout procedures and Action Trees have been validated IAW 4.4.10.					
41. A Validation Record has been signed by contractor and government personnel attesting to the completion of the validation process.					

Figure 5-1. The QA Review Evaluation Guide (cont'd.)

QA Review Evaluation Guide

Subsystem/Equipment _____ Reviewer(s) _____

Manual Title _____ Date _____

Volume No./Publication No. _____

Review Task	Reviewer--Initial & Date			Customer Approved?	Comment
	YES	NO	NA		
42. Quality assurance personnel were aware and involved in validation and are satisfied that it was carried out as required by the contract. When corrected, the JPA procedures will be essentially correct and ready for full AF verification.					
43. Errors, omissions, and improvements required as a result of validation have been properly incorporated prior to forwarding verification copies to the procuring agency.					
44. QA personnel have received a copy of comments and corrections from government verification and are satisfied that they are incorporated into JPA repro copy prior to prepublication review.					

Figure 5-1. The QA Review Evaluation Guide (cont'd.)

participants in the effort so that the nature of QA review will be common knowledge. Each participant in the JPA development should familiarize himself with the Quality Assurance Plan, particularly as it involves his function in JPA development and production.

5.4.2 Quality Assurance Feedback. Properly coordinated, the relationship between quality reviewers and the JPA Publications personnel can produce a continually improving technical data function. In order to achieve future benefits from a quality control program, errors must be brought to the attention of those who made them, and if they continue, their supervisors, as well. Unless the errors or shortcomings are pointed out and explained to those who caused them, similar mistakes will continue. For example, if a publications supervisor or a QA reviewer continually corrects a technical misconception in a JPA writer's procedural copy, or an editor's misuse of nomenclature, or a typist's misspelling of particular words without notifying the responsible individuals, he assures himself of having to correct similar problems in the near future. Instead, the supervisor/reviewer should point out the error to the originator and, if possible, suggest a method for guaranteeing that the error will not recur. The JPA writer can solve his own technical problem by obtaining explanations from a technical expert and then have another writer review his JPA draft before introducing it into the production system. The editor can solve the nomenclature problem by learning the assembly hierarchy of the equipment or system from an IPB or design documentation and post a nomenclature summary in his work area for a constant reminder. The typist/proofreader can, if necessary, post frequently mistyped words near the keyboard as a reminder. No matter what the solution, interested, well-motivated publications personnel will welcome the critical comment from QA personnel.

5.5 Technical Quality Control

It is just as important that JPA technical accuracy be assessed and controlled at the beginning of the writer's task analysis effort as it is during the later stages of validation and verification. The output of the task analysis phase of JPA development is a set of intermediate products which must be thoroughly reviewed for technical accuracy, consistency, and completeness before the preparation of final job guides or troubleshooting aids is begun.

Intermediate products, therefore, are the method by which the writer organizes the logical, accurate approach to the problems of maintenance. The efforts of writers in preparing the intermediate products such as Preliminary Information Worksheets, Task Description and Information Index, List of Malfunction Symptoms, List of Components and Failure Modes, Checkout Procedures, and Action Trees must be reviewed for technical quality while they are in progress.

Technical quality control methods to be employed by JPA supervisors and reviewers in assessing the technical accuracy of task analysis, intermediate products, job guides, and FPTA are described in detail in Sections 2, 3, and 4, respectively. It is important to note here that the role of task analysis and preparation of intermediate products is first to ensure the in-depth study necessary to completely define and design the maintenance and troubleshooting tasks, and then to form the basis for day-to-day technical review of the data. The quality control reviewer should use the QA Review Evaluation Guide (Figure 5-1) to ensure that task analysis and the preparation of intermediate products have been performed with technical thoroughness, completeness, and compliance with the specification.

5.6 Production Quality Control

Production quality control is the phase of JPA development intended to ensure that the technical accuracy and completeness which was checked and approved during in-process technical reviews is not compromised by production errors. The nature of JPA is such that several types of production quality deficiencies are capable of seriously detracting from the technical integrity of the products. The inspections and review for production quality must be more thorough and painstaking than with most other forms of documentation. Personnel assigned to quality assurance must examine many aspects of JPA text and illustration quality. Many such checks can be performed by a qualified editor or technical writer who has a working knowledge of the purpose, use, intent, and detailed requirements of the specification in Volume I. The QA editor must be provided sufficient time to examine various aspects of each volume for which he is responsible. An attempt to inspect for the many different aspects in one overall edit increases the probability that some errors will be overlooked. It is preferable that the QA reviewers make several passes through the manual, each time watching for a particular category of production quality errors, such as those categories described below.

a. Writing Style--It is, of course, very important that the writing style of the JPA be consistent from frame to frame and from volume to volume. This can be assured by involving the QA editor early in the JPA development so that he can ensure that writers use the standards specified for sentence structure in JPA procedural writing, and that verbs and nouns appropriate to the specification requirements and the comprehension level of various readers are selected for use in the text.

b. Step Continuity and Numbering--The QA editor must ascertain that there are appropriate references from

step to step and frame to frame. Each step must be checked to ensure that it is referenced from some other part of the procedure. Step numbering must be checked to eliminate repeated or omitted step numbers. It is very important to monitor each change to the JPA procedures. The addition or deletion of a step, for example, may cause correction to numerous other steps which are referenced from or to the changed step. The QA reviewer must therefore become cognizant of all changes to the JPA.

c. Completeness of Step--Each step must be checked for completeness, to make certain that it has not ended prematurely, and has provided, if appropriate, a "right" and "wrong" branch.

d. Nomenclature Consistency--Every mention of a system, subsystem, or equipment name (including assemblies, subassemblies, parts) must agree with the official nomenclature established for the program, or must conform with restrictions on use of colloquial nomenclature (3.3.7.3.f. in the Specification).

e. Text Composition and Formatting--The manuals must be checked for compliance with the format parameters of the specification (e.g., typography, page dimensions, placement of task titles and page numbers, etc.).

f. Formatting of Warnings, Cautions, and Notes--The content of these items must be checked for compliance with the specification.

g. Clarity and Level of Writing--Editorial experts must inspect the text for appropriateness for the JPA user described by the Contractor and the Procuring Agency, and for compliance with the Level of Detail Guide (3.2.12 in the Specification).

h. Use of Capitalization and Numbers--The JPA text and illustrations must be checked for capitalization and number usage. Capitalized words and numbers must be treated consistently through the manual and must be in compliance with the specification rules for usage.

i. Overall Organization and Front Matter--The QA editor checks the organization of all draft and final JPA products to ensure that organization of data into Volumes and Sections and the preparation of front matter is in complete agreement with the requirements of the specification.

j. Illustration Quality--The quality of illustrations must be checked thoroughly during all phases of the program. First, a check should be made to determine whether or not the illustration is appropriate to the text (i.e., contains no more or less detail than is necessary). Second, the detailed agreement of the illustration and the equipment is ensured by visual examination. Third, the illustration line weight is examined and improved if necessary.

5.7 Validation

The contractor's program office, contract department, publications department, or a similar group may be responsible for formulation of the validation team and the validation process. Validation, however, is essentially a Quality and Accuracy Assurance function by means of which the contractor gains assurance that what has been written and illustrated against contract requirements is complete and accurate, and represents a quality product. The contractor's Quality Assurance department should, therefore, schedule, organize, and monitor the entire validation process if no other group is responsible for it. A quality assurance inspector should be a member of the validation team throughout validation to ensure that it is proceeding in accordance with all contract requirements, including Section 4 of the JPA specification. The Quality Assurance member of the validation team should be alert to prevent the deterioration of the validating effort if it should last for many days. Sometimes when validation is a lengthy process and the same team members participate throughout, there is a tendency to assume the correctness of some JPA material rather than actually testing it. QA personnel should guard against this, especially in the latter stages.

5.7.1 Preparing for Validation. Good planning is essential to a successful JPA validation. Planning and preparation should consist of the following steps:

a. Consult the approved Quality Assurance Plan. If any changes are anticipated that change the schedule, conditions, personnel, etc., advise the Procuring Agency before proceeding.

b. Make certain that the JPA product to be validated is in fact complete and ready for review. It should be checked for completeness, accuracy, and compliance with the specification before proceeding.

c. Determine that the equipment involved is:

1) Available for validation.

2) Reserved for use by the validation team during specific periods.

3) In its normal operating mode (i.e., functioning properly, properly aligned, etc.).

d. Determine that all ancillary equipments (e.g., test equipment, tools, interfacing subsystems, etc.) are assigned and operable. Test equipment should be checked for calibration before being used.

e. Notify the Procuring Agency of the date and place of validation at least 45 days in advance of validation, unless otherwise specified by the contract.

f. Assign and schedule the participants of the contractor's validation team (see Section 4.4.5 of the specification) well in advance so that they will be committed to the validation.

g. Prepare and circulate a detailed agenda for the validation (if one has not been included in the QA plan). The agenda should provide fairly detailed scheduling, such as: "From 9 a.m. to 12 p.m.--Validate entire Display Monitor Job Guide." Circulate the agenda in time for participants to comment, if necessary.

h. Obtain the Validation Record forms from the contracting officer and have them available for signature by the contractor and the government personnel. Validation Records are explained in the Data Item Description, DI-M-3408.

5.7.2 After Validation. After JPA products (ATIM, Job Guides, FPTA) have been validated, the Validation Certificates should be copied and forwarded to the contracting officer. Also, QA personnel should make certain that all corrections, improvements, or additions are quickly satisfied in the preliminary manual and are re-validated if data has been changed or added.

5.8 Verification

Normally, the contract will require contractor publications and/or technical personnel to participate in the government verification. Even if the contract does not require contractor presence, it is in his best interests to send someone on his staff who is familiar with the JPA products. He can usually reduce the number of comments by being present to explain why certain approaches were taken. Where discrepancies are found during verification, he can prescribe changes or corrections that will obviate formal, time-consuming correspondence which often includes a typed set of comments, some of which the contractor may have to respond to with formal documentation.

The contractor will find that the government verification process will proceed more quickly, smoothly, and diplomatically if he is represented by the person most technically cognizant of JPA content.

Quality assurance personnel should obtain a copy of or access to the master correction copy used at verification. Normally, the government verification team will make and keep a master correction copy, and the contractor keeps his own copy. QA personnel should review the corrections made to make certain not only that all comments were satisfied but also that in changing no new errors were inserted.

Particular care should be given at this time to the quality of the deliverable documents. If the deliverable item is a reproduced document, the quality of all printed copies should be carefully checked to ensure against missing pages, improper collation, printing deficiencies, etc. If the deliverable item is photolithographic negatives, careful attention should be paid to the production specification to ensure that it has not been violated in terms of negative quality, mortising, etc. The final phase of QA involvement in a successful JPA program should be during prepublication review by the government personnel when QA personnel show the changes made to the JPA products to reflect the verification comments.

APPENDIX A

GUIDELINES FOR THE PREPARATION OF GENERAL EXERCISE SPECIFICATIONS

Introduction

The development of JPAs is a process that requires many skills not commonly found in the preparers of conventional technical data. Even individuals who meet the recommended personnel requirements for the various development tasks will probably require some training and some opportunity to demonstrate these new skills before being assigned to JPA development for the first time. Supervised practice in key skills will be required both for development of the skills and for demonstration of proficiency in their application.

This handbook alone cannot guarantee the adequate development of some skills, especially if the skills are dependent upon a new or different view of the world of maintenance. Nor can the handbook provide a course of instruction in JPA development. The handbook does, however, through this Appendix, provide some guidance toward the preparation of supervised practice exercises that will help in both development of key skills and assessment of JPA-developer capabilities.

The process of producing practice exercises begins with completion of a General Exercise Specification (GES), a structured description of a practice exercise for a particular operation. An operation is defined here as a step or group of steps described in the handbook, the performance of which results in an identifiable product. A completed GES serves as a blueprint for development of materials and procedures for the exercise which it describes. To be most effective these exercises should require the student to practice task behaviors which are similar to those they will have to perform on the job.

A sample General Exercise Specification has been developed and follows the guidelines discussed below. This sample will serve to illustrate the directions presented in the guidelines and, along with them, aid in implementing the GES concept.

Qualifications for Preparers of General Exercise Specifications

The preparers of General Exercise Specifications should have the following qualifications:

a. Minimum of a Bachelors degree in Experimental Psychology or a related area.

b. Minimum of two years experience working in development of technical training for operation and maintenance of military hardware. This experience should include:

1) Behavioral task analysis
2) Training requirements development
3) Training materials development

c. Minimum of two years experience in flight line maintenance of military aircraft. The individual should have a working knowledge of military technical data systems (i.e., ability to read technical data, and use technical documentation as source materials).

GES Preparation Guidelines

The GES provides the following information about the planned exercise:

a. Exercise Title
b. Exercise Objectives
c. Exercise Input Conditions
d. Student Activities
e. Instructor Activities
f. Performance Dimensions and Measures
g. Overall Exercise Score and Associated Criteria
h. Performance Feedback and Remedial Activities

Definitions of the above GES dimensions and guidelines for using them are provided below.

a. Exercise Title. The title of the exercise should identify the operation the student will be practicing by naming the resulting product e.g., "Prepare the List of Components and Failure Modes."

b. Exercise Objectives. The exercise objectives are the specific behaviors the student will practice in the exercise, which should be similar to the behaviors required of a JPA developer on the job. The following are guidelines for developing and presenting exercise objectives:

1) Locate the handbook sections covering the operation to be practiced.

2) Review the steps included in the operation and the qualifications prescribed for the individual who will

perform it. Identify the steps and substeps in the operation which (considering his experience and training) the recommended task performer is not likely to perform adequately without structured practice. In some cases this judgment will be straightforward. For example, many of the steps performed in the maintenance task analysis will clearly be new to the handbook user and consequently should be practiced (e.g., developing the Level of Detail Guide). On the other hand, some of the steps will clearly be routine and will not require practice (e.g., securing documents from the technical library). In addition, some of the steps will require behaviors which are not new to the performer but because of new working definitions, information requirements, and/or overall philosophy of the operation may require practice to assure adequate performance. For example, some of the operations in the handbook require the use of source documents to acquire specific information (e.g., completion of a set of task descriptive worksheets). Although the content and format of the source materials are likely to be familiar to the task performer, the information requirements he is trying to satisfy (i.e., as stated in the draft specification) will be new to him. Therefore, the relevant steps should be practiced.

3) Briefly summarize the steps or groups of steps to be practiced in terms of directly observable and measurable behaviors. Whenever a nonobservable behavior is included in the steps to be practiced (e.g., learn the definition of "output") incorporate it into an observable behavior (e.g., "Search source data and locate information describing equipment outputs as defined in 3.4.2.2 of the draft specification.")

c. Exercise Input Characteristics. This section of the specification describes the materials and instructions the student receives initially and during the exercise. The topics to be covered here are instructions, materials-media, and materials-content.

1) Instructions--Briefly describe the content of the exercise instructions. Since most exercises will require students to follow the procedures presented in the handbook, and because of the desire to maintain a job-like situation, instructions should be kept to a minimum. If the procedure followed by the students will be different from that called out in the handbook, a

special instruction will be required and that requirement should be identified here. For example, some of the steps in an operation may not be practiced because they require no new skills. In such cases, the student's completion of the step may be simulated and the products of the step provided as input for practice of the remaining steps in the operation.

Also, if any special requirements exist concerning the administration of instructions, they should also be described here. For example, it may be necessary to specify when in the sequence of student activities a particular instruction should be presented (i.e., at the outset, after step x, on request, at the exercise conclusion).

2) Materials-Media--Describe the physical form of the materials with which students will work. In order to maintain job-relevance, the media for exercise material (i.e., source data, previously completed products) should be functionally similar to the materials students will use in the work situation. That is, working with the exercise materials should impose no new skill requirements on the students as a result of media characteristics.

Printed matter (hard copy) will be the medium used most frequently in the handbook exercises. Video tapes or films may be used to present complex, dynamic information (e.g., to practice observation of maintenance activities for task analysis). Also tape recorded interviews with maintenance personnel, illustrators, etc., may be useful for practice of certain steps.

3) Materials-Content--Describe the content of the input materials the student will work with in the exercise. The content should be functionally similar to that of the materials students will use in the field to perform the operation being practiced. The "input" sections of the handbook for the steps to be practiced will provide the basic information required to complete this portion of the exercise specification.

The types of content which could be specified for exercises include the following:

a) Hardware Technical Data (e.g., Technical Manuals or Technical Orders).

b) Military Standards and Specifications (e.g., the draft specification).

c) Special illustrations (e.g., photos or films of technicians performing maintenance tasks).

d) Partially completed products to be completed by the student (e.g., a PTIM Detailed Step Description Worksheet, or List of Failure Modes).

e) Completed products of preceding steps (e.g., Test Equipment and Tool Use Form).

If certain materials for an exercise have special characteristics which influence their preparation or acquisition, these characteristics should be recorded here. For example, the exercise developer may wish to purposely select deficient technical data to allow students to practice recognizing and rejecting inadequate source materials. A description of the modifications should be included in the specification.

If the materials are to be presented to students in some definite sequence or in relation to student performance, the order should be described. For example, in completing the Detailed Step Description Worksheet, the student may request, secure, and search specific data sources as a function of the item on which he is currently working. The order of distribution of these should be described.

In preparing this segment of the GES it is highly desirable to locate and attach samples of the type of material prescribed for the exercise. These samples will aid the producer of specific exercise content to satisfy GES requirements.

d. Student Activities. This portion of the General Exercise Specification provides a description of the student's activities in the exercise and the sequence in which they will be performed. The following types of information concerning student activities should be included (when appropriate):

1) The handbook reference (page and paragraph numbers) describing the operation to be practiced.

2) An indication of differences between the student's activities in the exercise and those called out in the handbook.

a) The student may not be asked to completely perform all the steps covered by the relevant handbook section. For example, in practicing preparing a job guide, it may be judged unnecessary for students to produce front matter which is completely specified by the draft specification (e.g., title pages).

b) Occasionally, it may be useful to include student activities in the exercise which are not specifically called out by the handbook but which are implied by it. For example, a number of operations described in the handbook require the task performer to search existing technical data for particular information. The exercise for such an operation could include practice in selecting the proper source documents, locating the required data, and determining whether the data located is appropriate to the task (i.e., in terms of completeness, level of detail, and accuracy). If the materials are found to be inadequate the student could then request further documentation.

c) Differences in the sequence of student activities between the exercise and the handbook should be identified.

e. Instructor Activities. List the instructor's activities in the exercise. Because of the requirement to make the exercises as job-relevant as possible, the instructor should be limited to a supportive and relatively passive role. The types of instructor activities which may be used in exercises include the following:

1) Distribute materials.

2) Provide instructions and answer procedural questions.

3) Operate exercise-related support equipment (e.g., signal generating devices used to support practice of readings and tolerance data collection).

4) Perform exercise-related tasks which aid in simulating realistic job conditions (e.g., perform maintenance activities for student observers practicing task analysis procedures).

5) Evaluate student performance and provide feedback.

6) Answer questions related to student performance feedback.

7) Record student performance scores.

f. Performance Dimensions and Measures. Describe the dimensions of student performance to be evaluated in the exercise and the measures of performance adequacy to be applied for each dimension. The following are some general guidelines for completing this segment of the exercise specification:

1) Consider the basic characteristics (or dimensions) of the student's performance which should be evaluated to assess its adequacy. Characteristics such as the following should be considered:

a) accuracy
b) completeness
c) performance time required
d) consistency
e) responsiveness to specified requirements

Note that it is possible to evaluate a given performance in terms of more than one dimension or combination of dimensions. For example, in defining illustration requirements for a job guide, the student's performance could be evaluated in terms of accuracy, completeness, and responsiveness to the draft specification.

In determining which dimensions or combinations of dimensions to utilize, it will be important to consider factors such as:

a) The relative importance of a dimension for overall performance adequacy. For a given operation the accuracy with which a specific step is performed may be far more critical for successful completion of the operation than the adherence to consistency requirements.

b) The degree of independence of performance dimensions. If two performance dimensions are highly correlated, typically it will not be necessary to measure both of them. If they are independent it may be useful to measure both of them.

c) The difficulty and cost involved in securing a reliable and valid measure of the dimension for the step in question.

The task of identifying dimensions for measurement is clearly a complex one and frequently will require weighing factors such as those above against one another in an effort to make the most cost-effective selection.

2) Identify a method of measuring the relative acceptability or adequacy of the student's performance on each of the selected dimensions. These measures can be quantitative or qualitative.

For example, a quantitative measure of completeness for the illustration requirements would be the proportion of the total number of hardware items mentioned in the text which are called out in the student's suggested illustration (within specified limits). A qualitative measure of the student's responsiveness to the draft specification would be the instructor's judgment of the acceptability of the illustration with regard to level of detail. When such judgments are described in this segment of the specification, define the responses available to the instructor (e.g., "excellent, satisfactory, weak, and poor") and identify the section of the draft specification which provides criteria for the judgment.

In selecting a measurement technique attempt to maximize the degree to which the measure will accurately reflect the performance dimension being assessed and will provide a relatively precise indication of performance level on that dimension.

g. Overall Exercise Scores and Associated Criteria. The purpose of this portion of the specification is to define a means of assigning a grade to the student's overall performance for an exercise. The previous discussion was concerned with a molecular evaluation of the students performance along particular dimensions to identify specific behavioral inadequacies. The overall grade is a more gross measure used to determine whether or not the student's performance in the exercise was acceptable and if further practice is required.

1) A quantitative composite score--The composite is a weighted average of the quantitative scores on each of the performance dimensions used in the exercise. The weights for each dimension are assigned as a function of relative importance of that dimension as compared to the others under consideration. For example, the accuracy with which a particular task is performed

may be judged to be twice as important as the speed dimension and therefore the accuracy score would be weighted twice as heavily as the speed score.

The weighted composite score is most easily employed when all the component dimensions are quantifiable. However, if one or more of the component measures is a subjective judgement the composite exercise score could still be used. For example, if an "acceptable/nonacceptable" judgment was used for the dimension, assign an arbitrary number of points to the "acceptable" judgment, and fewer points to the "nonacceptable" judgment, weigh them accordingly, and compute a composite score for the exercise.

If a quantitative composite score is used it is necessary to establish a criterion of acceptable performance, i.e., the score which the student must exceed to "pass" the exercise. The specific cut-off score depends upon the possible range of scores, but should be high enough to assure that students who pass will be able to perform acceptably in the field. Record the cut-off score at this point in the specification.

2) A Qualitative Composite Score--This is a qualitative judgment of the student's overall performance for the exercise (e.g., "pass/fail"). The instructor should make a judgment based on his subjective assessment of particular performance characteristics. A composite subjective score is most useful in assessing performance on large, complex, and difficult operations which the student is not likely to perform adequately the first time through and which will require several iterations before the student completes the problem correctly. (E.g., development of a relatively complex action tree).

The criterion for acceptable performance here is the instructor's judgment of overall student performance in the exercise. If the instructor rates the performance "acceptable," the student has passed.

h. Performance Feedback and Remedial Activities. It is required that all exercises contain feedback to the student regarding the adequacy of his performance, both overall and for specific steps in the exercise. The steps for which feedback will be provided should be listed. Also, the materials which must be produced to allow the instructor

to evaluate student performance should be described. These materials will include the following:

1) Correct versions (properly executed examples) of all products to be produced by the student in the exercise.

2) A reference to the draft specification description relevant to the student's products.

3) Examples of typical incorrect student responses and suggestions for correcting them.

In addition to describing the feedback procedures, this portion of the specification should also identify the remedial routine to be used for students whose overall exercise performance was below criterion. Select one or a combination of the following approaches:

1) The student works through additional problems similar to the initial set but utilizes different specific content. The student continues practicing (with feedback) until he satisfies minimum requirement.

2) The student revises the portion(s) of the exercise which he originally performed inadequately. Eventually, his product must meet minimum adequacy requirements.

The former approach (No. 1) should be used when the exercise deals with a brief operation (three or fewer steps) and/or results in a relatively simple product (e.g., a list of hardware functions). The latter approach should be used in cases when the operation practiced contains four or more steps and/or results in a complex product. If an exercise contains both types of student activities then a combination of feedback routines may be possible.

Sample General Exercise Specification

A sample exercise specification has been attached to this appendix to aid in implementing the guidelines presented above. It is suggested that the format illustrated in the sample be followed although it is not necessary to adhere to the narrative writing style used.

GENERAL EXERCISE SPECIFICATION

a. Exercise Title: Development of a List of Malfunction Symptoms

b. Exercise Objectives. The objectives of this exercise are to provide practice and performance feedback for the following task behavior:

1. Identify all unique patterns of out-of-tolerance ouputs resulting from failure modes of all components of the hardware item under test.

2. List the symptoms and relate each symptom to all of its possible causes.

c. Exercise Input Characteristics

1. Instructions. Instructions to the students will cover the basic elements of the exercise:

a) The student will receive an initial list of components containing statements of the effect of each component failure mode on its related outputs.

b) The student will be given a reference to the appropriate sections of the draft specification and the handbook.

2. Materials-Media. The source data for this exercise will be printed material in hard copy form.

3. Materials-Content. The list, a) will name all components for an item, b) will name all outputs that could be affected by any of the component's failure modes, c) will name all of the failure modes of each component, and d) will describe the effect of each failure mode on all affected outputs.

d. Student Activities. Upon receiving the initial data package each student (or team of students) will follow the instructions in the handbook for the step. Students will be able to request further data if they feel it is required. At the completion of the step the students will receive feedback which will indicate the adequacy of their performance.

e. Instructor Activities. The instructor's role in this exercise will be to:

1. Distribute materials.
2. Provide instructions and answer procedural questions.

3. Evaluate student performance and provide feedback.
4. Answer questions related to student performance feedback.
5. Record student performance measures.

f. Performance Dimensions and Measures. Each problem performed by the student will be evaluated in terms of the following:

1. Accuracy in identification of all unique symptoms. The student must not list any patterns of out-of-tolerance outputs more than once; he must not omit any unique patterns, and he must not fail to list each single-output symptom.

2. Completeness in listing all possible causes of each symptom. The student must list all component failure modes that can produce each listed symptom.

g. Overall Exercise Scores and Associated Criteria. The practice exercise will contain five practice problems. Each problem will require the student to construct a complete List of Symptoms. The overall exercise score will be the percentage of problems in the exercise satisfactorily completed by the student. To complete a problem successfully, the student must meet the criteria described above (in f). The criterion of acceptable overall performance for this exercise will be 80 percent. That is, in order to perform acceptably the student will have to produce a perfect list of symptoms in four of the five problems.

h. Performance Feedback and Remedial Activities. Each instructor will be provided with a key to the correct answer for each problem in the exercise. The key will enable him to evaluate student performance and provide feedback including:

1. The correct list of symptoms for each list of components and failure modes.

2. The correct list of causes of each symptom in each list.

Students will receive feedback concerning their performance in terms of:

1. Overall exercise performance (i.e., percent of problems answered correctly).

2. Performance of each problem.

Students who do not meet criterion will be required to perform remedial exercises to determine the extent to which they have profited from the feedback. These problems will be similar to the initial set but will concern different lists of components and failure modes.

APPENDIX B

SUGGESTED TASK STEP DESCRIPTION STYLE GUIDE

1. Be consistent with the use of fractions or number of significant digits in numbers with decimal components: "The case is 2.75 inches by 6.50 inches by 10.54 inches," (not 2-3/4 inches by 6.5 inches by 10.54 inches).

2. Always precede the decimal point with a zero in expressions less than unity: "0.056 volt ac."

3. Panel-mounted tip jacks shall be designated as test jacks; multipin jacks and plugs shall be designated as either plugs or jacks.

4. When referring to a pin on a multipin connector, separate the connector number from the pin designation by a hyphen (J5-F, J6-4, PS-F, P6-4).

5. Open or close access doors and panels.

6. Remove or reinstall covers.

7. Open or close drawers

8. Secure or release fasteners and latches.

9. Tighten nuts and bolts. When required, tighten them to a specific torque. (Tighten nut to 500 pound-inches torque.)

10. Install or remove screws

11. Remove or install components; replace a component or part if a new or a repaired one is to be installed.

12. Set or release brakes

13. Connect auxiliary equipment to test jacks, filler valves, etc.

14. Apply pressure to ports, valves, cyclinders, etc.

15. Output or input is applied or measured between test jacks, test points, etc.

16. Meters and dials indicate. (They do not read.)

17. Open or close and set or reset circuit breakers.

18. Rotary and toggle switches are set to a position. (Set power switch to ON.)

19. Depress and release pushbutton switches. Momentarily depress self-test switch. Depress and hold self-test switch. Release self-test switch.

20. Controls are adjusted for a given response: "Adjust amplifier gain control for indication of 15 volts ac on voltmeter;" or rotated to a specific position: "Rotate signal output control clockwise to 15MA."

21. An indicator light comes on or goes off.

22. Capacitors charge or discharge. (Do not use the term "condenser" for a capacitor.)

23. Gates are opened or closed.

24. Data flows.

25. The words "shall" or "will" indicate mandatory requirements. "Should" indicates a nonmandatory desire or a preferred method of accomplishment. The word "may" indicates an acceptable or suggested means of accomplishment.

26. When writing instructions to perform several similar actions on several similar items in succession, do not write one sentence to include all actions. Write the task steps for one complete action, then write the same task steps for the next action. For example:

    1. Remove lens (1)
    2. Remove bulb (2)
    3. Install new bulb
    4. Reinstall lens (1)
    5. Remove lens (3) etc.,

    is preferred over:

    1. Remove lenses (1), (3), (5), (7)
    2. Remove bulbs (2), (4), etc.

27. Switch setting to establish an observable equipment condition can take the following forms: "Momentarily depress POWER switch ( ), lighting ON light ( )." "Depress and release PRINT switch ( ) when READY light ( ) comes on." "Depress ERASE switch ( ), release when screen ( ) is blank."

28. Lights that automatically come on and go off, flash, e.g., "check that the warning light is flashing."

INDEX

Accuracy assurance, Section V, 5.5, 5.6
   Overview 5.1
   Validation 5.7

Action tree 4.1, 4.4.3
   Component block diagram 4.5.2
   Development 4.5.1
   Example of development 4.5.4
   Review for completeness 4.5.5
   Sample 4.4.2
   Text sequence 4.5.3
   Validation 4.6

Analogous User Assessment 2.2.1, 2.7.3
   How to conduct 2.5.3
   Overview of 2.5.2
   Purpose of 2.5.2
   Recommended personnel 2.5.1

Aerospace Ground Equipment (AGE) requirements documents 2.2.3

Analyst task 2.1.1, 2.7.3, 2.14.2
   Qualifications 2.3.1

Assistant, data collection qualifications 2.3.2

Audience, description of 1.2, 1.3, 2.1.2, 2.5.2
   See: Analogous User Assessment
        Modified User Description
        Preliminary User Description

Body movements, coordinated 2.10.2.c

Calculations, performance of 2.10.2.b

Calibration requirements summary document 2.2.3

Capitalization 5.6.h

Cautions in JPA text 2.12.3.f, 2.14.4

Checkout procedures 4.1, 4.4
   Straight line checkout 4.1, 4.4
   Symptom pattern completion 4.1, 4.4.1

Command, air training 2.2.1, 2.5.2

Component block diagram 4.5.2

Components, list of 4.3.1

Consistency, nomenclature, 5.6.d

Contents, table of Page 5

Controls, adjusting 2.10.2.b

Criticality of task 2.13.3.a

Data coverage plan 3.5.2

Decision-making 2.10.2

Defects, noting 2.10.2.e

Depot maintenance definition 2.4.5.

Design sheet document 2.3.h

Detailed step description worksheet 3.7.2
- How to prepare 2.14.3, Appendix B
- Overview of 2.14.2
- Purpose of 2.14.2
- Recommended personnel 2.14.1

Developers
- JPA training 1.1, 1.2, 1.3, Appendix A

DH 1-3, personnel subsystem 2.2.7

Discriminations 2.10.2.g-h

Drawings of equipment 2.13.3.h

End item maintenance sheet (manual) document 2.2.3.j, 2.4.7.e

End item parts inventory document 2.2.4.d

Engineering reports document 2.2.4.b

Environmental conditions of task performance 2.13.3.d

Equipment alphabetical listing 3.5.3

Equipment-descriptive information 2.1.1, 2.13.3.f

Equipment pre-conditions 2.12.3.e, 3.7.3

Equipment systems
- Existing 2.2.2, 2.2.4, 2.9.3
- Modifications 2.2.5
- New 2.2.3

Facility interface sheet document 2.2.3.i

Failure modes
- Analysis of 4.4.2
- List of 4.3

Follow-on tasks 2.13.3.i

Format
Adherence to specification 5.6.e, 5.6.f
Job guides 3.7
Maintenance instruction frame 3.7.4
Maintenance procedures 3.8.3
Non-maintenance instruction material 3.8.4
Preliminary information page 3.7.3

Formatter 3.7.4.1, 3.7.4.2, 3.7.4.3

Forms for intermediate products 1.2

Found in troubleshooting column on PTIM 2.4.3

Frame, layout 3.7.4.2

Frequency of task performance 2.13.3.b

Front matter 5.6.i

Functional flow block diagram document 2.2.3.c

General exercise specification Page A-1
Preparation guidelines Page A-2
Qualifications for preparers Page A-2
Sample Page A-10

Generalized task list
Description of 2.2.1, 2.15.2
How to prepare 2.15.2
Purpose of 2.15.2
Recommended personnel 2.15.1

Graphic arts 1.2

Group Assembly Parts List (GAPL) document 2.2.3.b, 2.4.7.a

Half-split troubleshooting strategy 4.5.3

Handbook for JPA managers and training specialists (Volume III of this set) Page 1-1

Hardware items
Identification of 2.4.6
Inputs to list of 2.4.7

Illustrated Parts Breakdown (IPB) document 2.2.4.f

Illustrations, examples 3.7.4.2, 3.7.4.3
List of Page 6
Quality assurance 5.3, 5.6.j
Size 3.7.4.1

Indications, observing 2.10.2.a

Inspection guidelines manual 3.1, 3.4.4

Intermediate maintenance definition 2.4.5

Intermediate products Page 2, 1.2, 2.3.2
   See: Detailed Step Description Worksheet
        Generalized Task List
        JPA/Training Trade-off Ground Rules
        Level-of-Detail Guide
        Modified Audience Description
        Preliminary Information Worksheet
        Preliminary Task Identification Matrix (PTIM)
        Task Description and Information Index
        Task Identification Matrix (TIM) Annotated for JPA/
         Training Trade-off
        Test Equipment and Tool Use Form (TETUF)

Introduction 1.1, 1.2, 1.3

Job guides Page 2, 1-1, 1-3, Section III
   Contractor review 3.9
   Definition of 3.1
   Flowchart of development 3.1
   Format 3.7
   Overview of preparation 3.1
   Recommended personnel for preparing 3.2
   Validation 3.10

JPA, general background Page 2
   Development process, summary 1.3

Judgment 2.10.2.c

Layout, frame 3.7.4.2
   Samples 3.7.4.2

Level of detail 2.1.2
   Description of 2.10.2
   Guide 2.14.2
   How to prepare 2.10.2
   Recommended personnel 2.10.2

List of components and failure modes 4.3.1
   Sample analysis 4.3.1
   Sample format 4.3.1

List of malfunction symptoms 4.3.1, 4.3.2, 4.4.2

Maintenance Engineering Analysis Record (MEAR) document 2.2.3.a

Maintenance Ground Equipment (MGE) requirements documents 2.2.3.m

Maintenance instruction frame format 3.7.4

Maintenance instruction manuals 3.4.3

Maintenance loading sheet document 2.2.3

Maintenance sheets (automated) document 2.2.3.k

Maintenance support information manual 3.1, 3.4.5, 3.8.4

Malfunctions, simulated for validation 4.6.1, 4.6.2

Malfunction symptoms, list of 4.3.1, 4.3.2, 4.4.2

Management of JPA development 1.2

Managers, data Page 2

MIL-D-262339A data, qualitative and quantitative personnel requirements information 2.3

MIL-STD-1390 (NAVY) level of repair analysis 2.4.7.c

MIL-STD-1472, human engineering design criteria for military systems, equipment, and facilities 2.2.7

Modified User Description 2.6
- How to prepare 2.6.2
- Overview of 2.6.2
- Purpose of 2.6.2
- Recommended personnel 2.6.1

Motion, noting 2.10.2.c

Motor actions 2.10.2.d

Next step, selecting 2.10.2.a

Nomenclature consistency 5.6.d

Notes in JPA text 2.12.3.f, 2.14.4

Nouns, generic 2.14.2

Numbering of steps 5.6.b

Odors, discrimination of 2.10.2.h

Optimum Repair Level Analysis (ORLA) document 2.2.3.p

Organizational maintenance definition 2.4.5

Oscilloscope waveforms 2.10.2.d

Perceptions 2.10.2

Personnel, quantity needed to perform task 2.12.3.c

Personnel required for developing JPA
   Data Collection Assistant 2.3.2
   Qualifications 1.2, 2.3.1, 2.3.2, 3.2, 4.2
   Task Analyst 2.3.1
   Technical Writer 3.2.1
   Technician 4.2.1
   Technician/Observer 3.2.3
   Training of Appendix A

Personnel subsystem DH 1-3, 2.2.7

Personnel utilization sheet document 2.2.3.n

Personnel who are to use JPA (see audience) 1.2, 1.3, 2.1.2, 2.5.2

Preface Page 3

Preliminary User Description 2.2.1, 2.5.2, 2.6.2

Preliminary information page 2.12
   Format 3.7.3

Preliminary information worksheet 3.7.3
   How to prepare 2.12
   Overview of 2.12
   Purpose of 2.12
   Recommended personnel 2.12.1

Problem-solving 2.10.2

Procuring agency 2.2.1

Provisioning list 2.4.7

Psychomotor coordination 2.10.2.d

Quality assurance Section V
   Feedback 5.4.2
   Meeting specifications 5.4.1
   Organization 5.3
   Overview 5.1
   Plan 5.2
   Production 5.6
   QA review evaluation guide 5.4
   Responsibilities 5.4
   Technical accuracy 5.5
   Validation 5.7
   Verification 5.8

Quality assurance plan 5.2

Replacement parts 2.12.3.g

Requirement allocation sheet (RAS) document 2.2.3.d

Review for completeness of action trees 4.5.5

Schematic block diagram document 2.2.3.g

Scope of this handbook 1.1

Scrambled book 1.1

Sequence, troubleshooting 4.5.3

Service records, use of 2.5.3

Sound, detecting 2.10.2.f

Source, maintenance, and recoverability (SM&R) codes 2.4.8

Special tools and test equipment manual document 2.2.4.e

Specification, draft, for JPA (Volume I of this set) Page 2, 1.2, 5.4.1

Standard Operating Procedure (SOP) document 2.2.4.c

Standard statement examples 2.11.3.c, 2.11.4.c

Straight line checkout 4.1, 4.4.2

Summary of this handbook Page 2

Switches, operating 2.10.2.a

Symptom pattern completion 4.1, 4.4.3

System Project Office (SPO) 2.2.7

Task analysis Page 2, 1.1, 1.2, Section II
- Data sources 2.2
- Difficulty of 2.1.1
- Flowchart 2.2
- Helpful Air Force documentation 2.2.4
- Importance of 2.1.1
- Interviewing 2.2.6, 2.5.3
- Observation 2.2.6, 2.5.3
- Overview of 2.2
- Writing task descriptions 2.14.3

Task Description and Information Index (Worksheet)
- How to prepare 2.13.3
- Overview of 2.13.2
- Purpose of 2.13.2
- Recommended personnel 2.13.1

Tasks, grouping into activities 3.3

Task Identification Matrix annotated for JPA/Training trade-off 1.3, 2.2.1
How to prepare 2.8.2
Overview of 2.8.2
Purpose of 2.8
Recommended personnel 2.8.1
Validation 2.9

Task Identification Matrix, Preliminary (PTIM), description of 1.3, 2.1.3, 2.4.2
How to prepare 2.4
Purpose of 2.2.1
Recommended personnel 2.4.1
Review and approval 2.4.9
Updating 2.4.10

Technical orders 1.2, 2.1.1, 2.2.4.a, 2.4.7.f, 2.14.3

Technician 4.2.1

Technician/observer 3.2.3, 3.10.1

Test Equipment and Tool Use Form (TETUF) 2.12.3.a
How to prepare 2.11
Overview of 2.11.2
Purpose of 2.11.2
Recommended personnel 2.11.1
Validation 2.11.4

Time Compliance Technical Order (TCTO) document 2.2.5, 2.4.10

Time line sheet document 2.2.3.f

Tolerance 4.6.2.b

Trade-off, JPA/Training 2.2.1
Ground rules 2.2.1
How to derive 2.7.3
Overview of 2.7.2
Purpose of 2.7.2
Recommended personnel 2.7.1

Trade-off study report document 2.2.3.e

Training, JPA-coordinated Page 2, 1.2

Training of JPA developers Page A-1

Training specialists Page 2, 1.2, 1.3, 2.7.3

Troubleshooting aids, fully proceduralized Page 2, 1.2, 1.3
Flowchart of development 4.1
How to develop 4.3
Purpose 4.1
Review for completeness 4.5.5
Recommended personnel for preparing 4.2
Validation 4.6

Troubleshooting factors
Accessibility 4.5.3.2
Location of technician 4.5.3.4
Probability of malfunction 4.5.3.3
Reliability 4.5.3.1
Test equipment setup 4.5.3.5

User of JPA (see audience)

Validation
As quality assurance 5.7
Certificate 5.7.2
Of Annotated Task Identification Matrix 2.9.2
Of fully proceduralized troubleshooting aids 4.6
Of job guides 3.10
Of test equipment and tool use form 2.11.4
Preparing for 5.7.1

Values, reading quantitative 2.10.2.b

Verification 5.8

Vibration, detecting 2.10.2.f

Warnings in JPA text 2.12.3.f, 2.14.4
Examples 2.14.4

Worksheets, task-descriptive 1.3, 2.2.1
See: Detailed Step Description Worksheet
Preliminary Information Worksheet
Task Description and Information Index

Writer, technical 3.2.1, 3.8.1

Writing style, level, clarity 5.6.a, Appendix B