AD-773 114

THE ACODAC DATA PROCESSING SYSTEM. VOLUME I

Constantine D. Tollios

Woods Hole Oceanographic Institution

Prepared for:

Office of Naval Research

September 1973

DISTRIBUTED BY:

NTIS

National Technical Information Service
U. S. DEPARTMENT OF COMMERCE
5285 Port Royal Road, Springfield Va. 22151

UNCLASSIFIED 9/26/73

SECURITY CLASSIFICATION OF THIS PAGE (When Data Entered)

REPORT DOCUMENTATION PAGE

READ INSTRUCTIONS BEFORE COMPLETING FORM

1. REPORT NUMBER: WHOI-73-59
2. GOVT ACCESSION NO.:
3. RECIPIENT'S CATALOG NUMBER:
4. TITLE (and Subtitle): THE ACODAC DATA PROCESSING SYSTEM
5. TYPE OF REPORT & PERIOD COVERED: Technical
6. PERFORMING ORG. REPORT NUMBER:
7. AUTHOR(s): Constantine D. Tollios
8. CONTRACT OR GRANT NUMBER(s): N00014-71-C-0057
9. PERFORMING ORGANIZATION NAME AND ADDRESS: Woods Hole Oceanographic Institution, Woods Hole, Massachu[illegible] [illegible]2543
10. PROGRAM ELEMENT, PROJECT, TASK AREA & WORK UNIT NUMBERS: NR 292-047
11. CONTROLLING OFFICE NAME AND ADD.: Office of Naval Research, Code 480
12. REPORT DATE: September 1973
13. NUMBER OF PAGES: 151
14. MONITORING AGENCY NAME & ADDRESS (if different from Controlling Office):
15. SECURITY CLASS. (of this report): Unclassified
15a. DECLASSIFICATION/DOWNGRADING SCHEDULE:
16. DISTRIBUTION STATEMENT (of this Report): Approved for public release; distribution unlimited.
17. DISTRIBUTION STATEMENT (of the abstract entered in Block 20, if different from Report):
18. SUPPLEMENTARY NOTES:

Reproduced by
NATIONAL TECHNICAL INFORMATION SERVICE
U S Department of Commerce
Springfield VA 22151

19. KEY WORDS (Continue on reverse side if necessary and identify by block number):

1. ACODAC Digital Data Processing
2. Ambient Noise Analysis

20. ABSTRACT (Continue on reverse side if necessary and identify by block number)

This report describes the methods and computer programs employed in the processing of ambient noise data resulting from the deployment of ACOustic DAta Capsules during the period of 1971 to 1973. It summarizes the techniques and programs used to analyze third octave ambient noise, and narrow band frequence spectra, as well as high speed analog-to-digital processing. A detailed discussion of the ACODAC system can be obtained from the W.H.O.I. report submitted by Daubin, Berteaux, Bitterman, et al, reference: W.H.O.I.-72-164

DD FORM 1 JAN 73 1473 EDITION OF 1 NOV 65 IS OBSOLETE
S/N 0102-014-6601

UNCLASSIFIED 9/26/73

SECURITY CLASSIFICATION OF THIS PAGE (When Data Entered)

Best
Available
Copy

20. 87, dated November, 1972.
Volume II is a description of the hardware, interconnections, system schematics, program listings, and program flow diagrams. This volume is scheduled to be in print by mid-October 1973.

WHOI-73-59

THE ACODAC DATA PROCESSING SYSTEM

By

Constantine D. Tollios

WOODS HOLE OCEANOGRAPHIC INSTITUTION
Woods Hole, Massachusetts 02543

September 1973

DDC
RECEIVED
JAN 24 1974
B

Volume I

TECHNICAL REPORT

Prepared for the Office of Naval Research under Contract N00014-71-C-0057; NR 292-047.

Reproduction in whole or in part is permitted for any purpose of the United States Government. In citing this manuscript in a bibliography, the reference should be followed by the phrase: UNPUBLISHED MANUSCRIPT.

Approved for public release; distribution unlimited.

Approved for Distribution Earl E. Hays

Earl E. Hays, Chairman
Department of Ocean Engineering

THE ACODAC DATA PROCESSING SYSTEM

by

Constantine D. Tollios

Volume I

ABSTRACT

This report describes the methods and computer programs employed in the processing of ambient noise data resulting from the deployment of ACOustic DAta Capsules during the period of 1971 to 1973. It summarizes the techniques and programs used to analyze third octave ambient noise, and narrow band frequence spectra, as well as high speed analog-to-digital processing. A detailed discussion of the ACODAC system can be obtained from the W.H.O.I. report submitted by Daubin, Berteaux, Bitterman, et al, reference: W.H.O.I.-72-87, dated November, 1972.

Volume II is a description of the hardware, interconnections, system schematics, program listings, and program flow diagrams. This volume is scheduled to be in print by mid-October 1973.

ACKNOWLEDGEMENTS

Acknowledgement is given to the following persons for their contributions in the development of parts of the data processing system:

To Scott C. Daubin for his original ideas and concepts that led to the development of the ACODAC system, Earl E. Hays whose persistence in exactness and accuracy guided the development of the ACODAC analysis system through to a successful conclusion, and to Melvin A. Rosenfeld for his work in developing the statistical analysis methods that Donna Ekstrand put into a working program.

To Roger Goldsmith and Larry Kendricks who struggled with the third octave ambient noise analysis data to obtain an acceptable editing process which was later streamlined by Gene Mitchell; and to George Power and Mary Hunt for their work in developing the narrow band ambient noise system on Sigma 7.

To Lincoln Baxter for this versatile graphic display programs for ambient noise data and to Dick Nowak, James Doutt, James Adams, and Maxine Jones for their work on the shot analysis program.

To Ken Peal and David Bitterman for their work in developing instrumentation for the data processing system, and especially to Robert Kennedy for his ideas and assistance which helped in defining fundamental concepts used throughout the data processing system, and lastly, to Betty Stuermer for her illustrations, to Karen Pires for her excellent work in typing this report, and to Jess Stanbrough for his editing skills.

TABLE OF CONTENTS

Page

1. General 1

1.1 The Acodac System. 1

1.2 Computer Analysis Programs 4

1.3 Summary of Output Data 5

1.3.1 Third Octave Analysis of Ambient Noise Using a Hewlett Packard Computer with a General Radio RMS Detector. 5

1.3.2 CW Analysis 5

1.3.3 Editing Process of Third Octave Digital Magnetic Tapes. 6

1.3.4 Processing Ambient Noise Data From Clean Tapes. 7

1.3.5 Transmission Loss Data From CW Sources. 7

1.3.6 Narrow Band Analysis (Sigma 7 Computer) 8

2. Data Acquisition System 8

3. Analysis of Ambient Noise Data Using Third Octave Filters and 10 Second RMS Averages. 11

3.1 The Third Octave Analysis System 11

3.1.1 The General Radio Analyzer. 11

3.1.2 Time Code Reader. 13

3.1.3 Gain State Decoder. 17

3.1.4 Control Function Indicator. 19

3.1.5 The HP 2100 Digital Computer. 21

3.1.6 The Brush Analog Plotter. 21

3.1.7 Sangamo Playback Analog Tape Recorder 22

3.2 Input Data 22

3.3 Third Octave Data Output 22

TABLE OF CONTENTS (Cont.) Page

4. Internal Computer Processing of Ambient Noise Data. 25

4.1 The Acoustic System Equation 25

4.2 Pre-Process Calibration. 29

4.3 Automatic Calibration. 31

4.3.1 Obtaining the Initial Value Transfer Function 41

4.3.2 Selecting the Transfer from either the 50 or 200 Hertz Signals 41

4.4 Post Calibration Summary 43

5. Third Octave Analysis Program Description 47

5.1 General Specifications 47

5.2 Computer Timing. 49

5.3 Integration Timing Control 49

5.4 Playback Process Time and Throughput Rate. 51

5.5 Digital Output Magnetic Tape Data Records. 52

5.5.1 Data Recording. 52

5.5.2 Data Record Format. 53

5.6 Program Modes. 57

5.6.1 Idle Mode 57

5.6.2 Acquisition Mode. 57

5.6.3 Initialization Mode 58

5.6.3.1 Data Array Entries 58

5.6.3.2 Hydrophone Sensitivity 61

5.6.4 Test Mode 70

5.6.5 Termination Mode. 70

5.7 Command Keyboard Entries 70

5.8 Program Error Diagnostics. 70

5.9 Analog Plots of Third Octave Bands 72

TABLE OF CONTENTS (Cont.) Page

5.9.1 Determining Validity of Ambient Noise Data Derived from Brush Recordings 77

6. Analysis of Continuous Wave Signals Using Third Octave Filters and One Hertz Notched Filters to Obtain Transmission Loss Data 81

6.1 Input Data 81

6.2 Calibrating the Narrow Band System 83

6.3 Computing Transmission Loss 83

6.3.1 System Equations 83

7. Editing Process for Third Octave Ambient Noise Tapes 89

7.1 Purpose 89

7.2 Editing Options 39

7.3 Non-optional Editing 91

7.4 Data Validity Test Criteria 91

7.4.1 Band Level Test 91

7.4.2 Erroneous Gain Level Shifting and Shot Energy Detection 92

7.5 Data Averaging 94

7.6 Error Summary Printout 94

7.7 Processing from the Edited Tape 96

8. Statistical Summary 96

9. Acodac Ambient Noise Plot 96

10. Program Specifications for the Narrow Band Analysis Program (Sigma-7) 100

10.1 Program Specifications 100

10.2 Digitizer Sampling Rate 104

10.3 Frequency Resolution 105

10.4 Analog Filtering and Aliasing 105

TABLE OF CONTENTS (Cont.) Page

10.5 Initializing Parameters 106

10.6 Sampling Control 107

10.7 Digital Output Magnetic Tape Records 110

10.8 Duty Cycle Considerations 110

10.9 Digitizing Data from One to Six Hydrophones 112

11. Time Series Analysis of Narrow Band Spectra 112

12. Digital Processing of Transmissions Loss (Shot Analysis) 112

12.1 Background 112

12.2 Phase I - Analog-to-Digital Conversion 114

12.3 Phase II - Data Analysis 115

APPENDIX A Instructions for Using Program Anplot to Plot ACODAC Ambient Noise 118

APPENDIX B Program Description: ACOSTAT 124

APPENDIX C ACODAC Sigma 7 Third Octave Data Editing Program 131

APPENDIX D Stand Alone General Purpose Aid Conversion Program for Ambient Noise Analysis Using High Speed Multiplexer Digitizer 133

APPENDIX E Principals of RMS Measurements Using the General Radio 1926 Analyzer 149

LIST OF FIGURES

Figure		Page
1	Acodac Mooring System	2
2	Acodac Electronics Block Diagram	3
3	Acodac Third Octave Ambient Noise Analysis	12
4	Acodac Time Code Format (IRIG Standard Format C)	14
5	IRIG Standard Format D	16
6	Data Reduction Block Diagram	20
7	Pre-Process Calibration System Transfer Function	30
8	Acodac Calibration Phase for Five Minute Duration	38
9	Typical Time Spacing for 50 & 200 Hz Calibration Signals	38
10	Post Calibration Summary Printout	44
11	Post Calibration Summary Printout	45
12	Third Octave Ambient Noise Analysis System	48
13	Sample Ambient Noise Brush Analog Plot Output	74
14	Calibration Sequence Recorded on a Brush Plotter	79
15	Acodac System Diagram for CW Analysis	84
16	Acodac Continuous Wave Analysis	85
17	Sample Printout for Continuous Wave Analysis Using Narrow Band Filters	88
18	Flow Diagram of Ambient Noise Editing Process	90
19	Error Summary Printout	95
20	Station Identification	97
21	Statistical Summary of Ambient Noise for Selected Third Octave Bands	98
22	Frequency Histogram for a Third Octave Band	99
23	Ambient Noise Plot of Selected Third Octave Bands	101
24	Sigma 7 - Narrow Band Analysis System for Ambient Noise	102

LIST OF FIGURES (Cont.)

Figure		Page
25	Burst Mode (Ambient Noise Analysis)	109
26	Digitizing with Discontinuous Duty Cycle.	111
27	Acodac - Sigma 7 Narrow Band Ambient Noise and Time Series Analysis System	113
28	Typical Computer Oscilloscope Display of Shot Energy. . . .	116

LIST OF TABLES

Table		Page
1	Acodac Control Signals	10
2	Time Code Reader-Output Pin Assignments	18
3	Gain Bit Assignments	18
4	Post Analysis Calibration Summary (4 sheets)	32-35
5	Calibration Signal Input Levels	43
6	Acodac Header Label	54-55
7	Data Record Format	56
8	Spectrum Level Corrections for 1/3 Octave Filters	59
9	Center Frequencies for the Third Octave Bands	60
10	Delta Function Array for Hydrophones 1 Through 6 for Acodac System 1A1	62
11	Free-Field Voltage Sensitivity	63-65
12	Sample Printout of Initialization Data Entered in Third Octave Processing Program	66-68
13	Command Keyboard Entries	71
14	Error Message Summary for Program ACDI	73
15	Transmission Loss Computations for 130 Hz Towed Source	82

1. GENERAL

1.1 The ACODAC System

The ACODAC system, figure 1, consists of six hydrophones in a vertical array suspended in the ocean. The instrument pressure vessel, IPV, the heart of the system, contains the necessary electronics to actuate, maintain, and suspend the operation of the six hydrophones. Acoustic signals are recorded on a magnetic tape at a speed of 15/160 inches per second. Each hydrophone is recorded on a separate channel of the recorder for a total of six channels using direct recording methods. A seventh channel records an IRIG-C time code generator track using a 50 hertz carrier. The time code is generated continuously and records days, hours, and minutes along with control bits representing the gain state of each of the six hydrophone data amplifiers and system identification. Figure 2 shows the ACODAC system electronics used.

Since the hydrophone array can be deployed in the ocean for a period of a few days up to six months, the recorder electronics has the capability of cycling on and off at a rate dictated by the duty cycle selected prior to launch. To date, the 100 per cent duty cycle has been used for most of the deployments. This gives 10.66 days continuously. During the recording phase, control signals are injected on the six data tracks of the recorder indicating hydrophone overload conditions.

A 200 hertz control signal is modulated on the 50 Hz time code carrier to indicate the start of the calibration every six hours. The calibration frequencies, 50 and 200 Hz, are then recorded on the separate hydrophone data channels through each of the six hydrophone data amplifiers for a five minute period. Any duty cycle other than 100 per cent is detected on playback by control signals modulated on the time code carrier indicating start of data and end of data.

Once the system is recovered, the magnetic tape is removed and played back

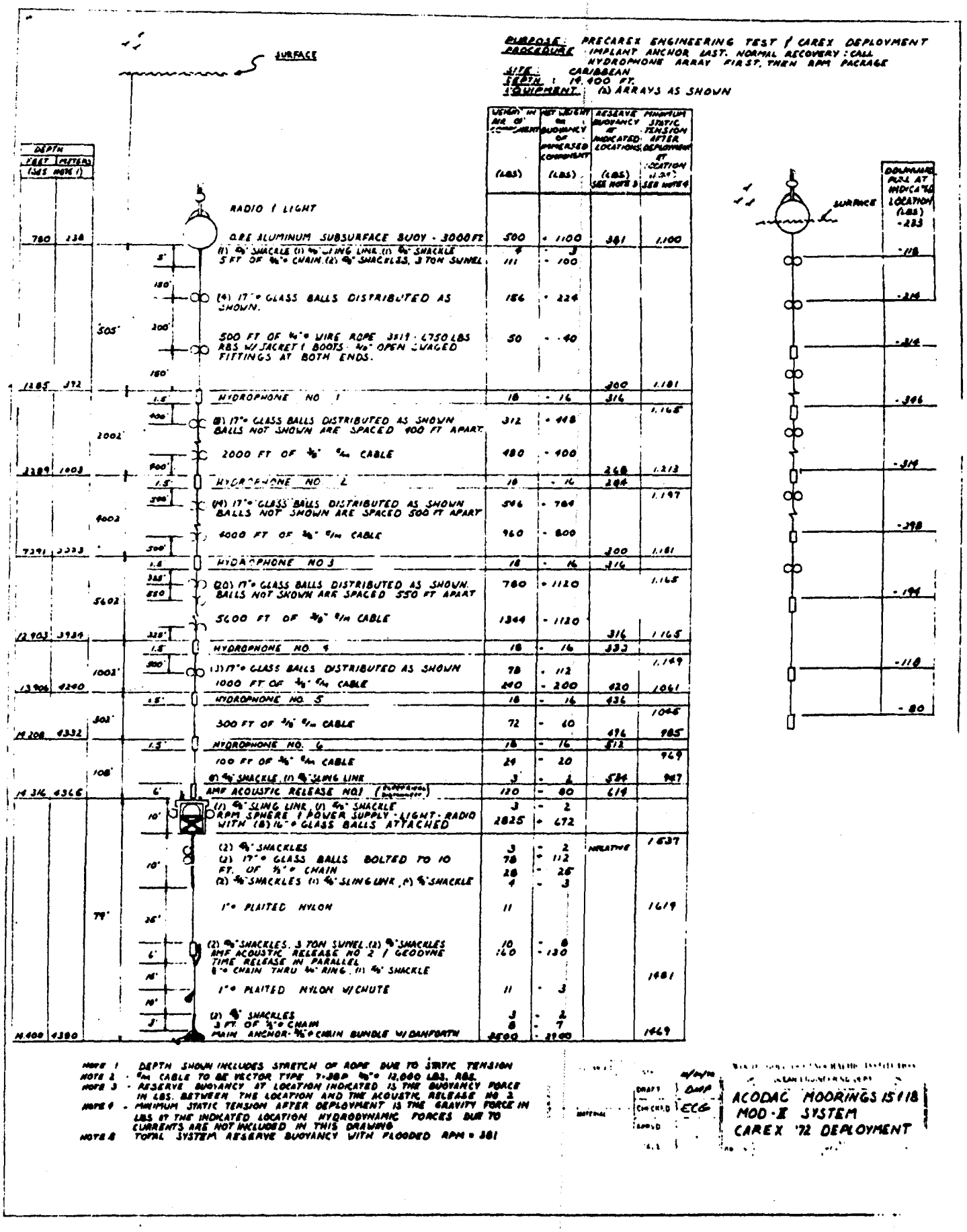

Figure 1. Acodac Mooring System

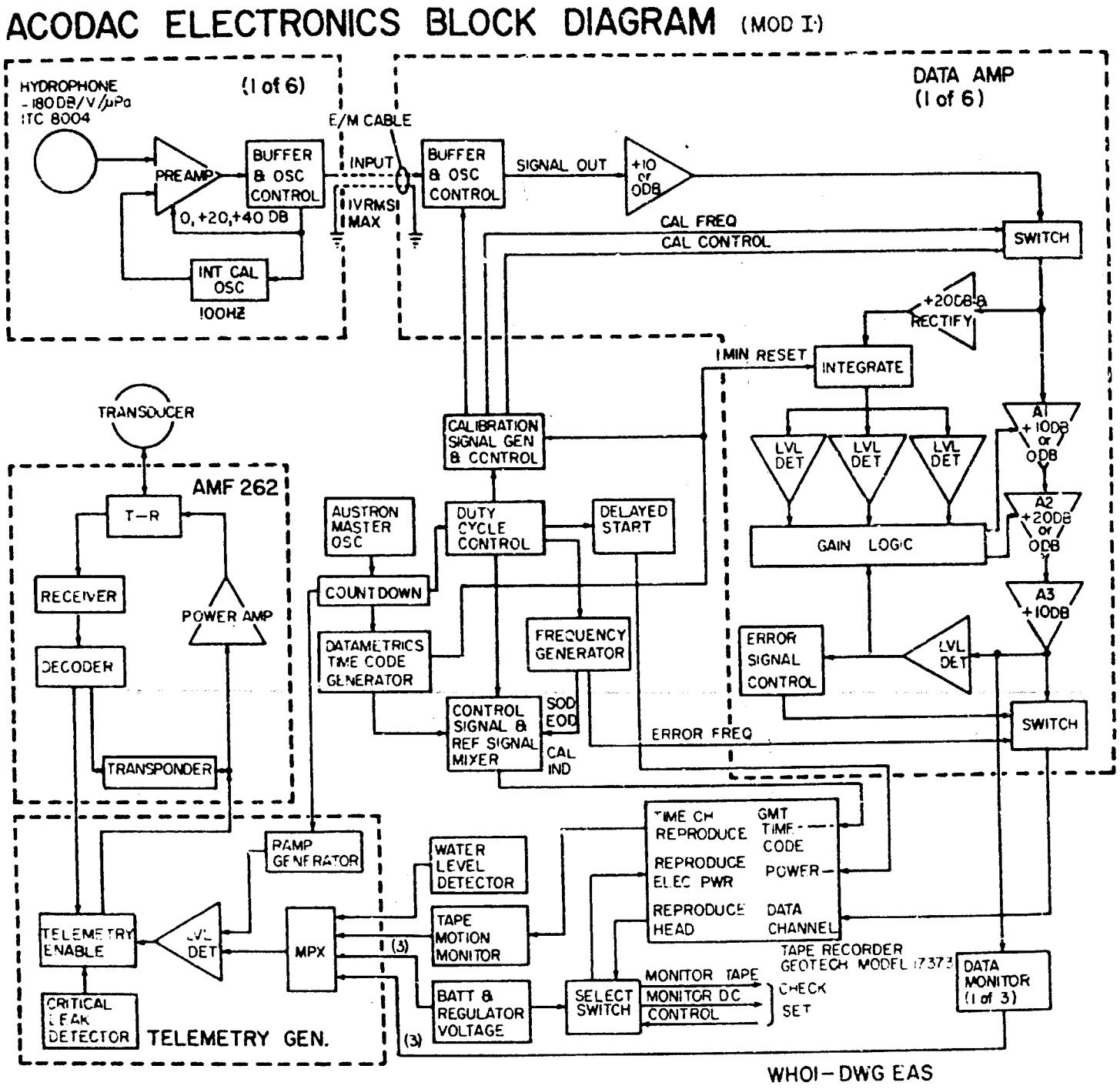

Figure 2. Acodac Electronics Block Diagram

to a Hewlett Packard 2100 digital computer through a General Radio Type 1921 Real-Time Analyzer.

1.2 Computer Analysis Programs

Four general methods are employed for the analysis of ambient noise data from ACODAC deployments using digital computer techniques:

(1) A third octave analysis using a General Radio analyzer with a Hewlett Packard 2100 computer to obtain average spectrum levels reference a microbar at the desired third octave bands.

(2) A narrow band analysis using the Sigma 7 analog-to-digital converter to obtain narrow band frequency spectra of a continuous time series.

(3) A continuous wave analysis system using one hertz bandwidth filters to determine transmission loss.

(4) A high speed digitizing process on the Hewlett Packard 2100 computer to analyze explosive shots to obtain transmission loss data.

Computer programs and techniques were developed to reduce the raw ACODAC ambient data to meaningful graphic plots and statistical information which were representative of the ambient noise conditions during the deployment phase. The type of output data was carefully chosen after considerable study to provide only the necessary information for objective acoustic analysis.

It should be emphasized that initial attempts of automatic data processing yielded large volumes of data resulting both from the editing phases and from the final stages of processing which were thought necessary in the analysis of the system. From this experience, the interim data processes were drastically reduced to provide only that information which was thought absolutely necessary to ascertain the quality and accuracy of data.

This report establishes the techniques employed in converting the raw ambient noise data into formats that can be used with the appropriate statistical subroutines to obtain the desired acoustics analysis.

1.3 Summary of Output Data

The following represents a summary of the output data available from the various data processing systems followed by a brief discussion of the methods used to produce each of the data outputs. It is intended that the data described below constitutes a "standard data package" available with the processing of each ACODAC deployment at the Woods Hole Oceanographic Institution.

It is realized that there can be varied presentations of acoustic data in the form of graphical displays and tabular statistical summaries depending upon the methods of analysis and results desired. However, the formats presented have been chosen to aid in the general acoustic analysis of the ACODAC deployments because of the large volumes of data available.

1.3.1 Third Octave Analysis of Ambient Noise Data Using a Hewlett Packard 2100 Computer with a General Radio RMS Detector

1. Digital magnetic tape of ambient noise data - 10 second average spectrum levels corrected to microbar levels.
2. Calibration summary tape.
3. Brush analog plots of ambient noise - 10 second average spectrum levels corrected to microbar levels.
4. Error diagnostic message printout.

1.3.2 CW Analysis

1. Digital magnetic tape of ambient noise data - 10 second averages corrected to microbar levels.

2. Brush analog plots of narrow band levels.

3. Error diagnostic message printout.

1.3.3 Editing Process for Third Octave Digital Magnetic Tapes

1. Produces edited or "clean" tape of the digital input ambient noise data from the third octave General Radio system. All shots and spurious signals are eliminated during the editing process. During the editing process, the 10 second averages can be corrected for the following:

a. change relative time to Greenwich Mean Time

b. insert a band level correction for all 10 second averages, or for a selected time window.

c. insert a level correction for all bands for all 10 second averages, or for a selected time window.

d. correct the 10 second averages for a transfer function shift for the selected six hour period desired using the transfer function computed and stored in the data record for that period.

e. select option to include all shot intervals on the "clean" tape.

During the editing process (producing a "clean" tape), any combination of 15 averages can be obtained with the high speed printer for the entire digital tape. The averaging base is selectable at run time and the editing program has been made flexible to include any averaging period desired. Also, during the editing process, a summary is printed tagging any signal level that exceeds the ambient noise window such as shots or gain changes not corrected for by the digitizing program. These diagnostic messages are later cross checked with the Brush plots of the same data to determine the nature of the excessive levels.

1.3.4 Processing Ambient Noise Data from Clean Tapes

Once the editing process has been completed, several options are available to the user as final data formats:

a. The user can select to produce two and ten minute averages of the average spectrum levels for the entire edited tape or for selected time windows. The data averaging base can be selected at process time and any averaging period can be computed, i.e., one and six hour averages, one minute, ten minute, and sixty minute time averages, etc.

b. The user can select to obtain 1 2 hour statistical information such as mean, standard deviation, kurtosis, and frequency histograms. These statistics are available for all frequency bands of interest. See figure 21 for sample of printout.

c. The user can select to produce a digital plot of the average spectrum levels for the entire period of the deployment or for a selected time window. Data are plotted using a one minute mean of the 10 second averages. Normally, three to four bands are plotted as a function of time; however, the program can plot the entire 15 bands. Figure 23 shows a sample plot.

1.3.5 Transmission Loss Data From CW Sources

A transmission loss table can be obtained using the edited copy of the narrow band system data tape as input. The program computes the transmission loss of the narrow band levels of a particular source along with the ambient noise based upon a two minute mean. The table provides the information to correlate transmission loss from a particular CW source with a ship's track.

1.3.6 Narrow Band Analysis (Sigma 7 Computer)

The narrow band analysis method requires the following programs:

a. An analog-to-digital conversion program to input ambient noise data from the Sangamo recorder via the A/D converter to the Sigma 7 computer. All six channels are digitized sequentially at a 54 KHz sampling rate, transmitted to the computer, and then dumped onto magnetic tape.

b. A media conversion program which inputs digital tape produced in a. (above) along with a gain tape produced from the third octave digitizing system, merges and re-formats the data to make it compatible with existing time series analysis programs.

c. The data produced from the media conversion is then processed through a time series analysis program to produce standard plots of frequency distributions, cross, and auto correlation studies.

2. DATA ACQUISITION SYSTEM

The ACODAC system consists of six hydrophones suspended in a vertical array with a data capsule (Instrument Pressure Vessel) containing all the required electronics to record acoustic signals onto magnetic tape from the hydrophone array. Referring to figure 1, the electronics contain data amplifiers, overload detecting circuits, calibration circuits, and a master clock to control the internal timing of the system.

The automatic gain control circuits are capable of injecting four levels of gain to permit recording within the dynamic range between the hydrophone

and the instrument recorder. All internal timing is derived from the master clock which generates IRIG-C time code information with a 50 hertz carrier for continuous recording of days, hours, and minutes on to the time code track of the recorder.

Gain state information is injected on the time code via the control function bits in the IRIG-C minute frame. Two gain bits per hydrophone plus two additional redundant gain bits are injected. The gain level injection occurs once per minute. The gain level of each data amplifier is determined by a circuit that integrates the incoming signal for one minute. A decision is made to determine which of the four gain levels the amplifier gain should be set to. The gain state is then switched at the end of the minute and the gain bits injected on the time code carrier.

The incoming signal once amplified is recorded on a magnetic tape recorder at a speed of 15/160th inches per second using the direct recording method. Seven tracks are recorded: six data tracks and one time code track. The electronics has the capability of discontinuous recording selectable prior to launch. This method can be used to increase the deployment time. Normally, a 100 per cent duty cycle is employed, but a 5 per cent duty cycle has been used (1 minute on and 19 minutes off).

A calibration sequence is also employed in the IPV electronics to allow injections of 50 and 200 hertz calibration signals once every six hours. These calibration sequences are used later in the data processing system to determine dynamic changes in the instrumentation and recording media. Table 1 shows a list of the control signals being used.

TABLE 1

ACODAC CONTROL SIGNALS

SIGNAL	HOW RECORDED	INPUT TO COMPUTER AND ACTION REQUIRED
Start-of-Data	50 Hz + 150 Hz for 4 sec.	Positive pulse for .05± .01 seconds - Integrations shall begin after delay of .013 seconds
End-of-Data	75 Hz + 150 Hz for 4 sec.	Positive pulse for .05± .01 seconds - stop integrations; if pulse comes during integration period data shall be rejected and noted on readout tape.
Error	75 Hz + 200 Hz for 100 milliseconds (real time) minimum.	Positive pulse for duration of error signal (1.25 ms min.) - Data during integration period shall be rejected and noted on readout tape.
Calibration Signal	50 Hz for 1 min. at 4 amplitudes, 200 Hz for 1 min. at 4 amplitudes	Positive pulse for duration of calibration signal - Process normally but note as calibration signal on readout tape.
Calibration Sequence Indication	200 Hz modulated on time code for 5 min.	Indicates calibration sequence.
Time Code	Continuously on track 7 for first 30s of each min	Parallel BCD (21 bits) in days, hours, minutes - Record on readout tape once per minute.
Data Amplifier Settings	Included in time/state code. Follows time code on edge track. Occupies part of second 30s of each min.	Two Bits - Record on readout tape once per minute. 00 corresponds to 10 db gain 01 corresponds to 20 db gain 10 corresponds to 30 db gain 11 corresponds to 40 db gain

3. ANALYSIS OF AMBIENT NOISE DATA USING THIRD OCTAVE FILTERS AND 10 SECOND RMS AVERAGES

3.1 The Third Octave Analysis System

Figure 3 shows the instrument connections for the third octave analysis system. The selected hydrophone signal from the Sangamo direct recording playback unit is passed through the control function indicator (CFI) panel where calibration and overload signals are detected through band pass filters. See table 1 for detection frequencies. From the CFI panel, the wide band signal enters the General Radio 1926 third octave Multifilter through bands 31 to 44. These bands correspond to the frequencies of interest of 15 to 300 hertz at an 80:1 playback rate. The signals are then fed into the General Radio 1921 Analyzer for digitizing. The wide band signal is also connected to band 45 but bypasses the miltifilter before it enters the GR analyzer. The output accumulators of these 15 bands are then connected directly to the Hewlett Packard 2100 computer through a 16 bit microcircuit interface card.

3.1.1 The General Radio Analyzer

Each hydrophone channel of the analog tape is played separately through the General Radio 1921 analyzer to convert the data from analog to digital. In the analyzer, or more precisely, the rms detector, the data once bandpassed through the series of third octave filters are sampled and fed through digital circuits that are time shared on all channels. The rms detector simultaneously computes the rms levels for each filter band taking a maximum of 1024 samples per band and converting each sample to a digital binary number and squaring it. The squared values are accumulated in memory registers until the end of the selectable integration period. At the end

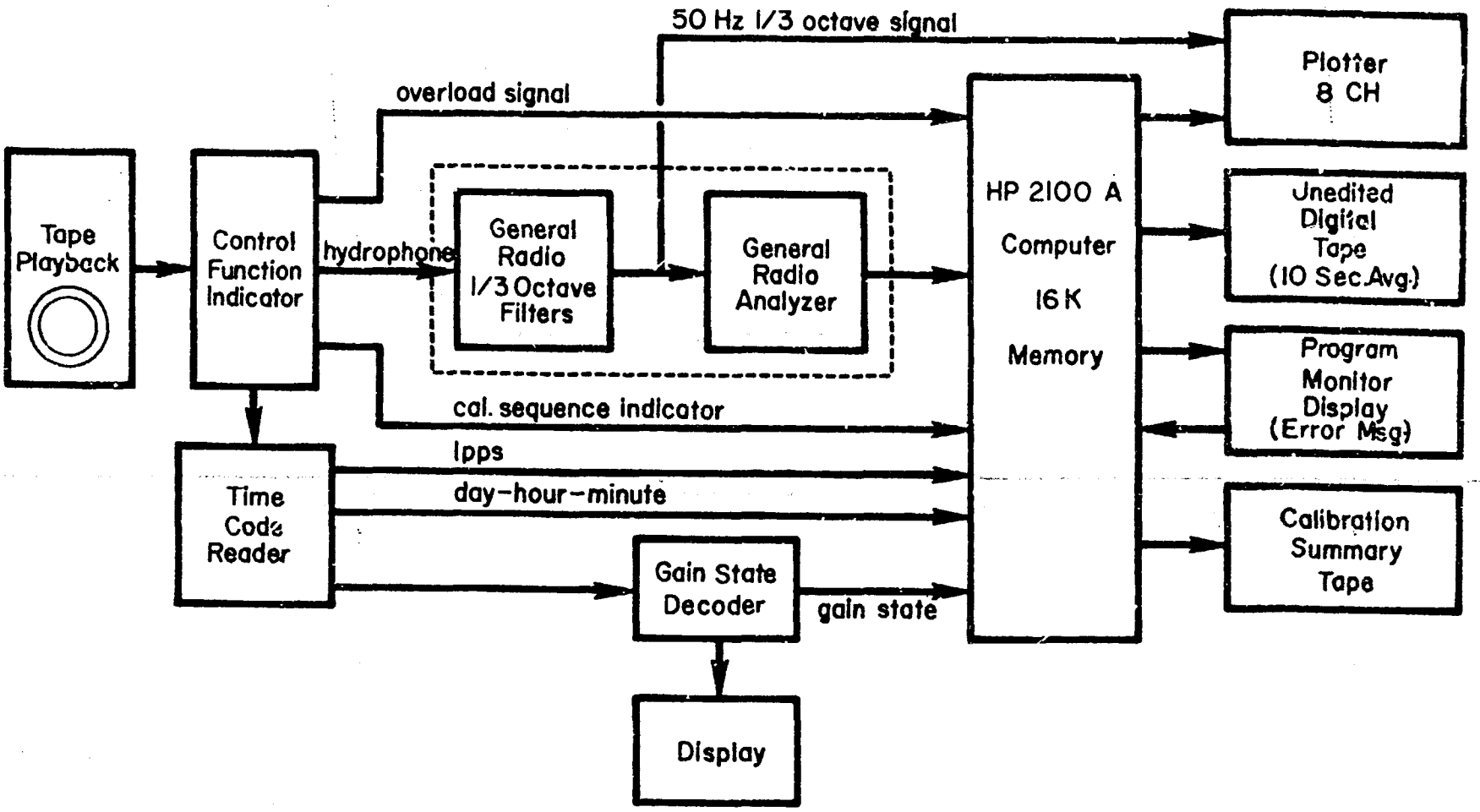

Figure 3. Acodac Third Octave Ambient Noise Analysis

WHOI '73
DWG EAS

of the integration period the sum-of-squares value is converted to decibels for output presentation to the computer. The analyzer performs the above operations by solving the equation:

$$rms = 10 \text{ Log}_{10}\{\frac{1}{N} \sum_{i=1}^{N} [\frac{V_{ti}}{V_o}]^2\}db \qquad (3.1\text{-}1)$$

where V_o is the voltage at the reference level, and N is the number of samples.

At this time, the computer is ready to strobe in the rms value of each band. See Appendix E for more detailed discussion of the General Radio.

3.1.2 Time Code Reader

The ACODAC processing system employs a Datametrics model 344 time code reader that converts IRIG-C serial time code with a modulated 50 hertz carrier to parallel BCD days, hours, and minutes time-of-year information. The BCD data is connected through a back panel connecter to the computer through a 32 bit TTL interface card. A read strobe pulse is transmitted to the computer once per minute from the time code reader so that the computer knows when to read valid BCD information. The strobe occurs at the on-time reference marker of the minute frame. Twenty-three binary digits represent days, hours, and minutes. See figure 4 for IRIG-C format.

The Datametrics time code reader accepts IRIG-C serial code from track 7 of the ACODAC ambient noise analog tape. Time of the year information is transmitted continuously in patterns of ones and zeros using amplitude modulation. The time code reader decodes the bit patterns by using envelope detection. A one bit

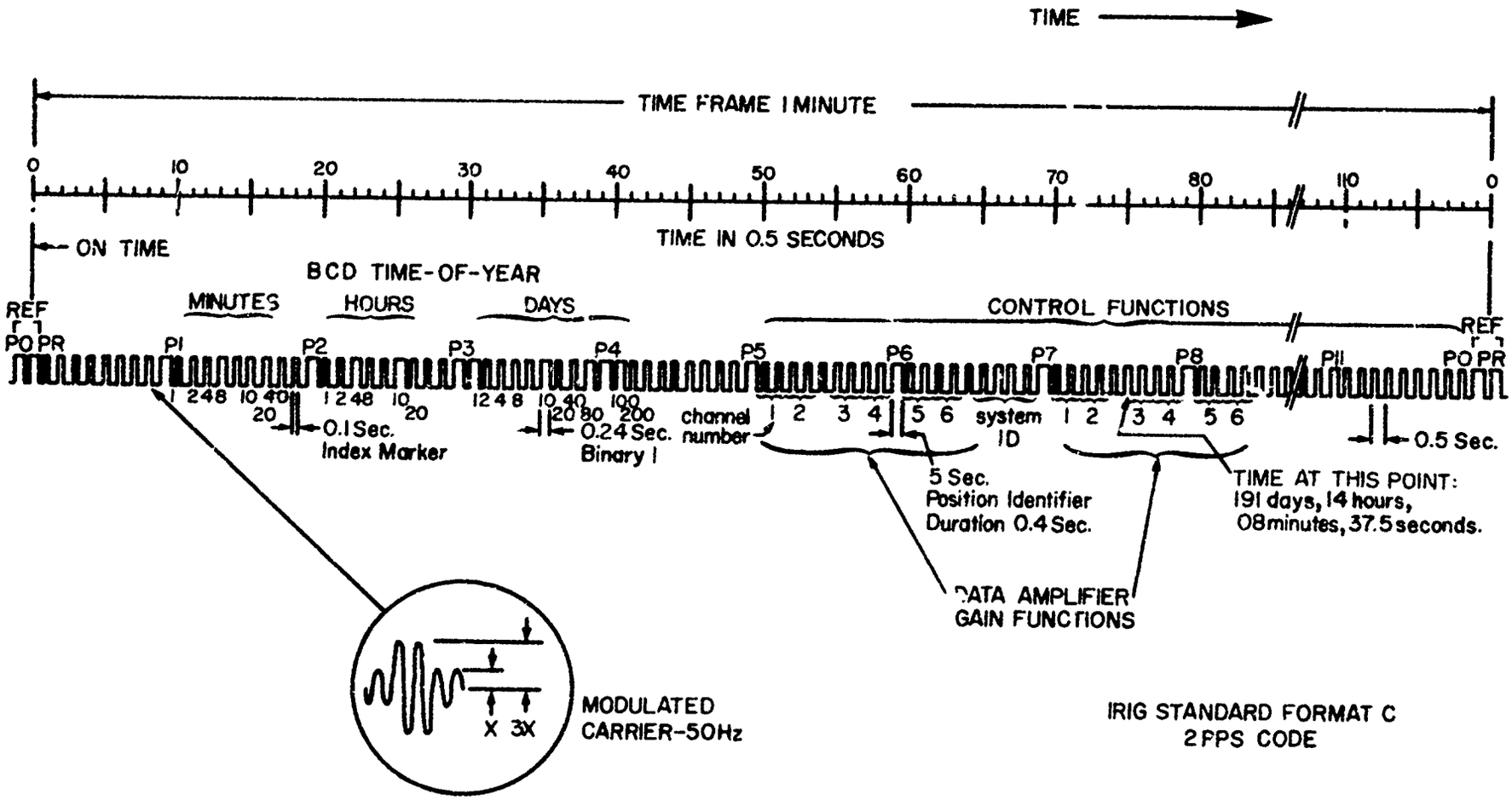

Figure 4. Acodec Time Code Format (IRIG Standard Format C)

DWG - EAS WHOI '73

is represented by a series of five cycles of the carrier having a ratio of 3:1 amplitude from a zero bit pattern. Three of the five cycles of the bit pattern must be detected in the envelope with an amplitude ratio of 3:1 with respect to a zero bit pattern in order to decode the envelope as a "one" bit.

The BCD time of year code can be transmitted in the first 21 seconds of the minute frame. The remainder of the minute time frame from 25 seconds to 60 seconds is used to transmit control functions, and in the case of ACODAC is used to transmit the gain states of the six hydrophone data amplifiers.

Computer program timing is obtained by a one pulse per minute signal coming from the time code reader. This signal is derived from the 50 hertz carrier being read from the IRIG-C time code track. Selectable playback rates are provided by a rotary switch on the front panel. Rates of 80:1, 8:1, 10:1, and 1:1 are selectable although present methods employ an 80:1 playback rate (the Datametrics reader also accepts 100 Hz carriers).

The hydrophone amplifier gain states transmitted in the control function part of the time code minute frame are detected in the time code reader and output through a rear panel connector directly to the gain state decoder panel.

An IRIG-D slow code (one hour code frame) is generated in the time code reader and available as an output through a BNC connector on the rear panel. The one-hour time frame is used as a timing reference marker on the Brush analog recorder. See figure 5 for the IRIG-D format.

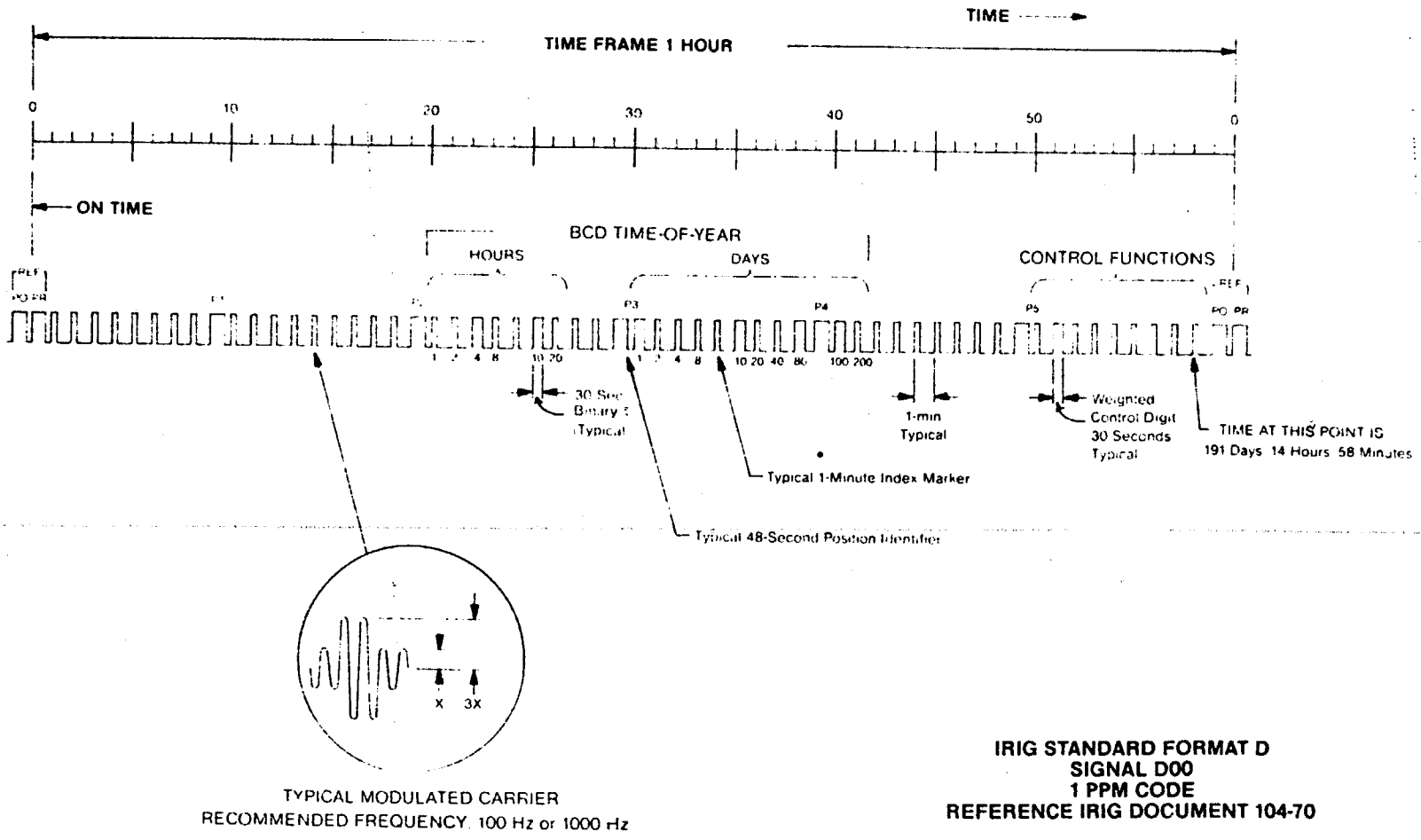

TYPICAL MODULATED CARRIER
RECOMMENDED FREQUENCY. 100 Hz or 1000 Hz

IRIG STANDARD FORMAT D
SIGNAL D00
1 PPM CODE
REFERENCE IRIG DOCUMENT 104-70

Figure 5. IRIG Standard Format D

Best Available Copy

3.1.3 Gain State Decoder

As was stated above, the gain states of the six hydrophone data amplifiers are transmitted on the IRIG-C carrier in the control function position. Each hydrophone data amplifier gain state is represented by two bits indicating the gain setting of a particular hydrophone during that minute interval. Since the IPV electronics can only change the data amplifier gain settings once during the minute, the amplifier gain remains constant during the entire minute. The change occurs at the zero second reference mark of the minute frame. Since the decoding of gain bits is so important, the system has been designed to transmit gain by using two sets of two bits for each hydrophone. A total of 24 bits is recorded on the time code carrier for six hydrophones. Each hydrophone has a range of 40 db of programmable gain range arranged as follows:

Bits	Gain (db)
00	10
01	20
10	30
11	40

The gain state decoder performs three functions: 1) checks the redundant gain bits from all hydrophone channels, 2) displays the gain bits and the gain error bit from one hydrophone channel, and 3) reads the time code during playback into the computer.

The gain bits are read from the state code bits according to the pin assignments of table 2 and table 3.

1. The gain error bit (E) for any channel is "1" when $A \neq AR$ or $B \neq BR$ for that channel. This can be expressed as

TABLE 2

TIME CODE READER

OUTPUT PIN ASSIGNMENTS - GAIN INFORMATION

(Connector J4)

Pin #	Function	Pin #	Function
1	Ch 1 - A1	26	Ch 1 - A1R
2	Ch 1 - B1	27	Ch 1 - B1R
3	Ch 2 - A2	28	Ch 2 - A2R
4	Ch 2 - B2	29	Ch 2 - B2R
5	Ch 3 - A3	30	Ch 3 - A3R
6	Ch 3 - B3	31	Ch 3 - B3R
7	Ch 4 - A4	32	Ch 4 - A4R
8	Ch 4 - B4	33	Ch 4 - B4R
9	Ch 5 - A5	34	Ch 5 - A5R
10	Ch 5 - B5	35	Ch 5 - B5R
11	Ch 6 - A6	36	Ch 6 - A6R
12	Ch 6 - B6	37	Ch 6 - B6R

TABLE 3

GAIN BIT ASSIGNMENTS

Gain	+10 db	+20 db	+ 30 db	+ 40 db
A	0	1	0	1
B	0	0	1	1

Computer bit	15	14	13	12	11	10	9	8	7	6	5	4	3	2	1	0
First word	0	E4	B4	A4	0	E3	B3	A3	0	E2	B2	A2	0	E1	B1	A1
DSI pin assignment	10	Z	X	R	N	F	D	2	8	6	V	T	L	J	B	4
Second word	0	0	0	0	0	0	0	0	0	E6	B6	A6	0	E5	B5	A5
DSI pin assignment									9	7	W	U	M	K	C	5

$$E = \text{Gain error bit} = A \cdot \overline{AR} + \overline{A} \cdot AR + B \cdot \overline{BR} + \overline{B} \cdot BR$$

The output to the computer for each channel is A, B and E. The 18 bits are assigned to the DSI inputs as shown in table 3.

2. A front panel switch selects AR, BR and E from the indicated channel to drive three panel lights (light on = "1").
3. Every time the time code data goes from 59 minutes to 00 minutes a one-second-long tick is generated on the Brush recorder event marker.

3.1.4 Control Function Indicator

The Control Function Indicator Panel (CFI) is used to detect control frequencies injected on either the hydrophone data track or the IRIG-C time code track of the analog tape recorder during deployment. The CFI panel contains band-pass filters and associated digital logic to detect these control frequencies injected. Any combination of four bits can be set to inform the computer that a control frequency has been injected. These are:

Bit 0 - Start of Data (Duty cycling only)

Bit 1 - End of Data (Duty cycling only)

Bit 2 - Error - overload indication

Bit 3 - Calibration sequence (injected once per six hours)

Figure 6 shows a block diagram of the CFI panel. A control interrupt informs the computer when any bit has been set by the CFI panel. The computer then strobes all four bits into the computer from the CFI output register, stores the bit configuration in the computer program, and then resets the output register so that a bit set can only be read once.

During the deployment phase, the error or overload signal will be injected through the hydrophone data amplifier and

ACODAC DATA REDUCTION SYSTEM BLOCK DIAGRAM

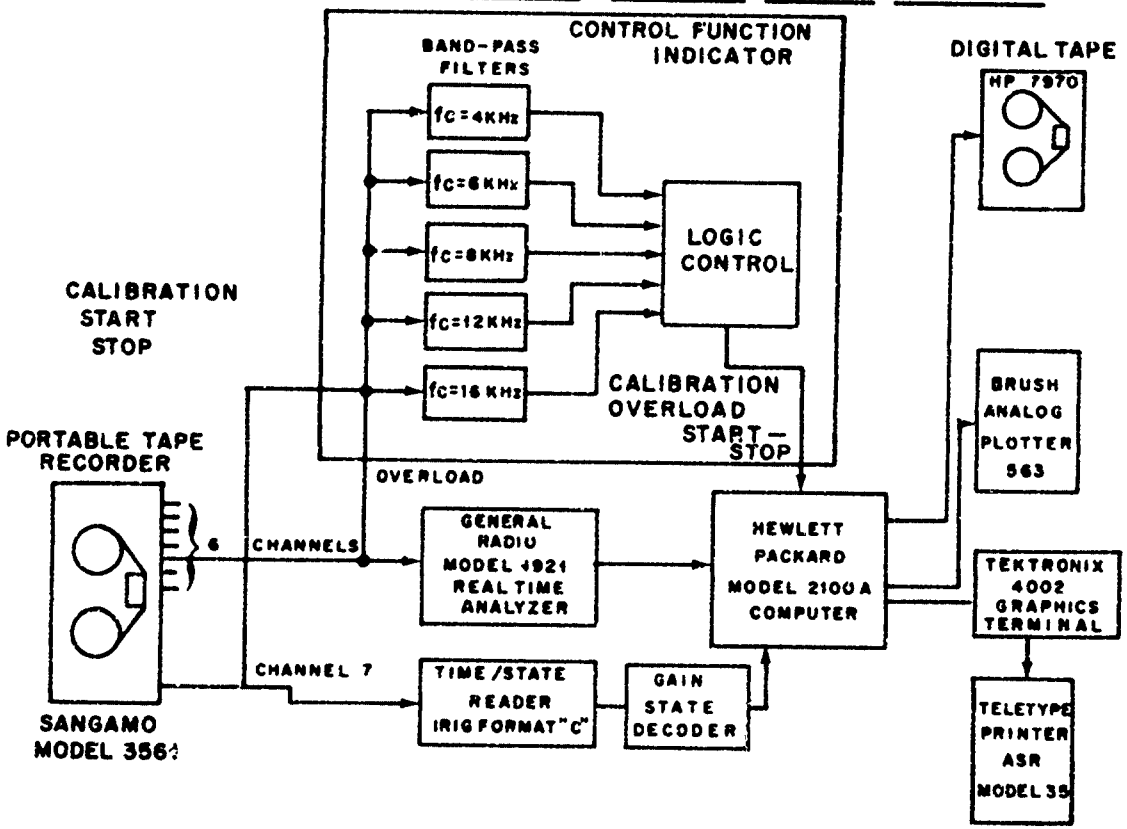

ACODAC DATA FORMAT

	RECORDED	PLAY-BACK
1. NO. OF CHANNELS	7 - ET.	7-ET
2. SPEED - I.P.S.	15/160	7.5
3. "ON" BLOCK	7.25 MIN	5.4375 SEC.
4. "DATA" BLOCK	7 MIN	5.25 SEC
5. GUARD BLOCK		
START	10 SEC	125 SEC.
STOP	5 SEC	.0625 SEC.
6. CONTROL SIGNALS		
START	150 Hz	12 KHz
	200 Hz	16 KHz
STOP	75 Hz	6 KHz
	150 Hz	12 KHz
OVERLOAD	100 Hz	8 KHz
CALIBRATION	200 Hz	16 KHz
	200 Hz	16 KHz

Figure 6. Data Reduction Block Diagram

recorded on the analog tape when the input hydrophone signal overloads the data amplifier. The remaining three signals, end-of-data, start-of-data, and calibration are injected on the time code carrier since they are common to all six hydrophones.

3.1.5 The HP 2100 Digital Computer

The Hewlett Packard 2100 digital computer is a standard general purpose digital computer used to control and process the ambient noise data recorded on analog tape. The computer has 16,000 words of memory and employs a priority interrupt system to service external devices. Two direct memory access channels are available for transfer of high speed data to and from the computer. One channel is used to strobe in data from the General Radio analyzer. The other channel is used to output ambient noise data records to digital magnetic tape. Some of the standard peripheral equipment attached to the computer are:

Model HP 2748A High speed reader

Model HP12925A High speed paper tape punch

Model HP 7970B 9-track digital magnetic tape (800 BPI, 45 ips)

Tektronix 4002 Input-output CRT display and graphics console

Model 365 Calcomp Plotter (digital)

Model ASR-35 Input-output console (backup)

Model 486 Brush analog recorder

3.1.6 The Brush Analog Plotter

The eight channel Brush analog plotter, Gould Instruments, model 486, is connected to the computer through digital-to-analog output interface cards. Data points representing 10 second averages of corrected ambient noise data (re: db/microbar) for selected third octave frequency bands are converted to analog signals and

plotted on the Brush recorder. The data points are plotted continuously through the entire hydrophone process period. The Brush plotter has eight amplifiers, model 134214-00, capable of operating in the log or linear mode. The present configuration requires the amplifiers to operate in the linear mode with an input range of 10 volts full scale representing an output dynamic range of 50 db.

3.1.7 Sangamo Playback Analog Tape Recorder

The Sangamo analog recorder playback tape unit, model 3561, is used to reproduce the acoustic signals recorded on the Geotech tape recorder. The Sangamo tape unit is equipped with 7 data tracks and 7 direct reproduce amplifiers to play back 6 hydrophone data channels and IRIG-C time code. The tape unit has a selectable speed dial capable of recording and playback of analog tapes of speeds from 1 7/8 ips to 30 ips.

3.2 Input Data

This method involves the analysis of a single hydrophone data channel at an 80:1 playback rate (recorded at 15/160 ips and played back at 7.5 ips). A hydrophone channel is played through a General Radio 1921 Analyzer System to obtain 10 second averages (1/8 second in playback) every 12 seconds. An IRIG-C time code track, recorded during deployment, is channeled through a gain state decoder to obtain the data amplifier gain settings once per minute. The following information is obtained from the data channels recorded during the deployment phase.

1. Wide band ambient noise data from 15 to 300 Hz.
2. Overload injection from data capsule (75 and 200 Hz signals) indicating signal saturation above minimum gain of 10 db.

3.3 Third Octave Data Output

The following forms of output data are obtained from the third octave

analysis process:

(1) Digital magnetic tape record. Each record contains seven minutes of data or 35 integrations for each of 15 bands (15-300 Hz). The sample base is 10 second averages. Each data minute contains a five word header providing the day number, hour and minute, gain setting, data type, and transfer function.

(2) Analog output plot. An analog plot containing 8 channels of data continuously recorded for the entire processing period of the hydrophone through the third octave system. The analog channels record the following information:

Channels 1-4: any four out of 15 bands selected for plotting.

The average spectrum levels, in 10 second averages, are in microbars. Generally, the selected third octave bands are:

Channel 1: 50 Hz

Channel 2: 100 Hz

Channel 3: 75 Hz

Channel 4: 200 Hz

Channel 5: is the computer output gain state level of the hydrophone being processed. Range in dc level represents data amplifier gains of 10, 20, 30, or 40 db.

Channel 6: Hydrophone gain as read directly from the time code reader. This redundancy has been useful to detect incorrect gain state decoding via the computer processing. If channels 5 and 6 do not agree, problems exist either in the computer processing program or system hardware.

Channel 7: Uncorrected wide band signal from processing hydrophone through the 50 Hz third octave filter plotted directly on the Brush plotter (not through computer). Channel 7 is used to check validity of data being processed through the computer. Visual checks are made between the uncorrected 50 Hz signal level of channel 7 with the corrected 50 Hz signal level being recorded on channel 1 from the

computer. In order to compare the levels of channel 7 with channel 1, a process can be used to convert the uncorrected 50 Hz signals of channel 7 and then to compare these results with the signal level of channel 1. If discrepancies occur, then the third octave process should be discontinued until the problem is resolved. Incorrect parameters inserted in the computer program during initialization are indicative of discrepancies between these two channels.

Channel 8: This channel is used to provide a suitable time base when analyzing the Brush plots. An IRIG-D time code is used from the time code reader which represents a one-hour repetition rate. Each DC level excursion represents one minute of hydrophone time, and the code frame repeats every hour.

(3) Post-Calibration summary tape. This calibration summary tape is used to analyze the data computed during the calibration cycle once every six hours. The post calibration analysis tape provides useful information to determine the quality of calibration data obtained during the five minute calibration sequence every six hours of deployment time. At the completion of processing a hydrophone, the summary tape is read into the computer and then printed out on the high speed printer. Figures 10 and 11 show a typical output from this process.

(4) Hydrophone gain tape. This digital output tape is optional. If selected for output, the program writes the hydrophone gain states for all the six hydrophones in the deployment onto magnetic tape once per hydrophone minute. In addition, day number, hour and minute, and transfer function are written in the record. This output tape is used in the narrow band analysis to provide hydrophone gain information along with digitized ambient noise data to a fast Fourier transform program.

(5) Summary error message printout. All errors detected or abnormal indications encountered during the processing of the hydrophone through the third

octave system are recorded on hardcopy. These printouts provide information with respect to the state of processing at any given time. For example, overload indications are recorded as messages once per minute of clock time (80 minutes of hydrophone time) to inform the operator as to the state of processing. It also proivdes a hard copy of all the parameters inserted in the computer program during processing. At present, there are 30 types of error messages that can be printed as a result of the third octave process.

(6) Third octave data dump. This program provides a sequential listing of all ten second averages obtained during the hydrophone third octave run. It is used to cross-check the results of the third octave process prior to releasing the digital tape for further processing. The ten second averages are arranged in one minute blocks and tagged with day number, hours and minutes, gain state, and transfer function.

4. INTERNAL COMPUTER PROCESSING OF AMBIENT NOISE DATA

4.1 The Acoustic System Equation

The computer inputs data from one hydrophone via 15 bands (15 through 300 Hz) through the third octave filters and the RMS detector to form 10 second average spectrum levels for each band. The spectrum levels are then corrected to microbars using the following correction equation:

$$(LS)_j = X_j - S_h - G_c - (delta)_j - (BWC)_j - (T'_{50}) \qquad (4.1\text{-}1)$$

where $(LS)_j$ - is corrected band spectrum levels re: microbar/volt/Hz for band j.

X_j - is uncorrected computer ambient noise level for band j.

S_h - is hydrophone sensitivity.

G_c - is gain setting of data amplifier.

$(delta)_j$ - is a correction factor for band j to account for the frequency response of a given hydrophone within the dynamic range of 15 to 300 Hz.

$(BWC)_j$ - is the bandwidth correction for band j.

(T'_{50}) - is the system transfer function obtained during six hour calibration cycle.

The system transfer function is computed from the 50 and 200 Hz signals injected every six hours for five minutes. The program stores the 50 and 200 Hz 10 second averages for four minutes and from previous knowledge of the levels injected along with the appropriate gain settings of the hydrophone, determines the following equation:

$$T'_{50} = \langle X'_{50} \rangle - (C')_n - Gc'_n \qquad (4.1\text{-}2)$$

where X'_{50} - is the ensemble average of the 50 Hz level obtained during the 5 minute calibration sequence.

C'_n - is the injected 50 Hz level applied during minute n.

Gc'_n - is the data amplifier gain state level for minute n.

Typical level injection and gain states for a calibration cycle are:

Minute 2: -41 db level, 40 db gain

Minute 3: -31 db level, 30 db gain

Minute 4: -21 db level, 20 db gain

Minute 5: -11 db level, 10 db gain

Note that minute 1 of the calibration cycle is not used. The first minute is used to allow the data amplifiers to seek the proper gain for the first level injection.

The corrected 15 bands of data in the form of 10 second averages are then written out onto digital magnetic tape arranged in seven one-minute blocks as the record length. Each minute represents five integrations tagged with day, hour, minute, data amplifier gain state, and transfer function obtained during the six hour calibration interval. It should be noted that one transfer function is used during the entire process period of one hydrophone. The current transfer function computed during any six hour interval is stored in the one minute data record but not used. Dynamic changes in the system affecting the overall transfer function should be examined carefully and, if necessary, corrections then would be applied in later processes (when the clean third octave tape is made).

The general equation is determined from the acoustic system below:

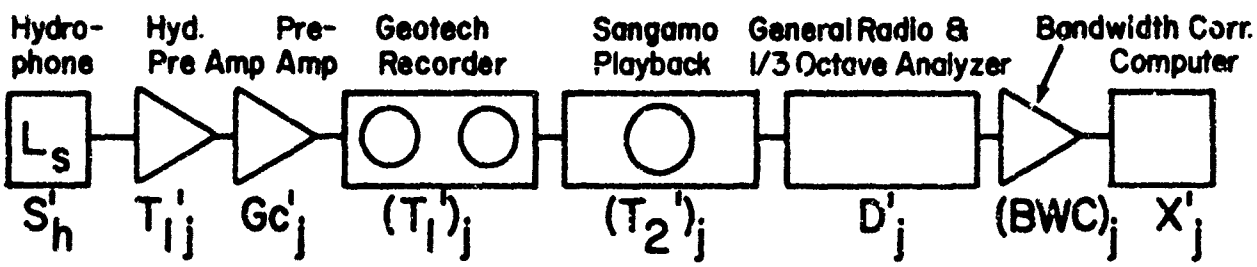

For a given input signal (L_s) from the hydrophone, the computer stores the average spectrum level, X_j, in db for each third octave band selected. The equation representing this system is:

$$X_j = (L_s)_j + S_h + (G_c)_j + (T_1)_j + (T_2)_j + D + (BWC)_j \qquad (4.1\text{-}3)$$

where X_j = computer raw value for band j

S_h = hydrophone sensitivity @ 50 Hz (Temp. and pressure)

G_c = gain setting of data amplifier

T_1 = transfer function of hydrophone preamp

T_2 = transfer function of recorder and playback system

D = transfer function of third octave filter bank plus General Radio RMS detector

BWC = bandwidth correction factor computed from 10 log BW, where BW = bandwidth.

For purposes of the playback analysis, the transfer functions of the Geotech recorder, Sangamo playback, and General Radio detector and third octave filter are combined as T.

$$T_j = (T_1)_j + (T_2)_j + D_j \tag{4.1-4}$$

The equation becomes:

$$X_j = L_{sj} + S_h + G_{cj} + T_j + (BWC)_j \tag{4.1-5}$$

During the calibration phase, a calibration signal at a fixed frequency (50 and 200 Hz) is recorded on tape. The playback system is then represented by:

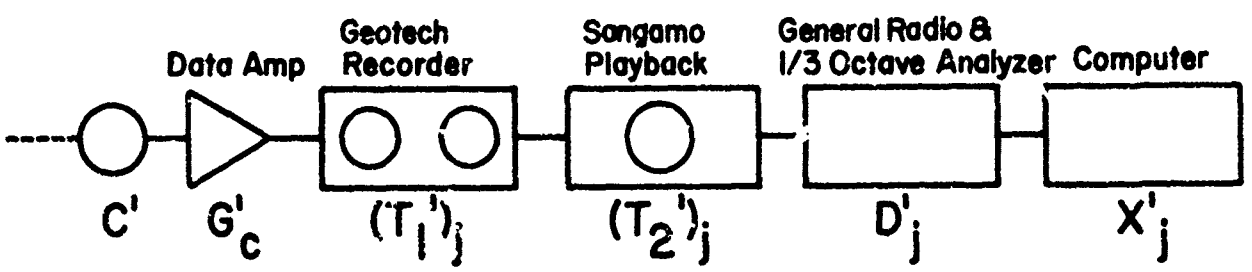

Combining the transfer functions of the Geotech and Sangamo recorders and the General Radio Analyzer yield an overall transfer function, T'_j, during the calibration cycle. This can be expressed as:

$$T'_j = (T_1')_j + (T_2')_j + D'_j \tag{4.1-6}$$

The overall equation becomes:

$$X'_j = C'_j + G'_c + T'_j \tag{4.1-7}$$

where C' = calibration frequency @ 50 and 200 Hz at four signal levels

j = 1/3 octave bands for 50 and 200 Hz signals

Solving for the unknown transfer function represented by the Geotech, Sangamo, and General Radio yields

$$T'_{50} = \langle X'_{50} \rangle - (C'_n - Gc'_n) \qquad (4.1\text{-}8)$$

where n = 1, 2, 3, or 4 for the four signal levels and gain settings.

$\langle\ \rangle$ = ensemble average

Since the calibration signal levels, C', and gain settings, G'_c, are known, T' represents the new computed transfer function of the recorder systems for a given calibration period at the reference frequency of 50 Hz.

4.2 Pre-Process Calibration

Now, to obtain a relationship between the transfer function of the overall system at the 50 Hz reference frequency to any third octave center frequency, a calibration tape must be prepared and played through the system applying a calibration signal input at each of the third octave center frequencies from 10 to 300 Hz. The plot of figure 7 shows the transfer function of the system with a constant signal level applied to the input of the hydrophone pre-amplifier and the output read from the computer.

Using the 50 Hz calibration signal as a reference, it can be seen that at any given frequency, j, the overall transfer function T_j' is:

$$T_j' = T'_{50} + \Delta_j \qquad (4.2\text{-}1)$$

where j = the particular third octave center frequency. Since the hydrophone sensitivity, S_h, varies as a function of frequency, the Δ_j term applys a correction factor to account for the frequency response of a given hydrophone within the dynamic range. The Δ_j term is then an array of values for each third octave center frequency applied to the correction equation.

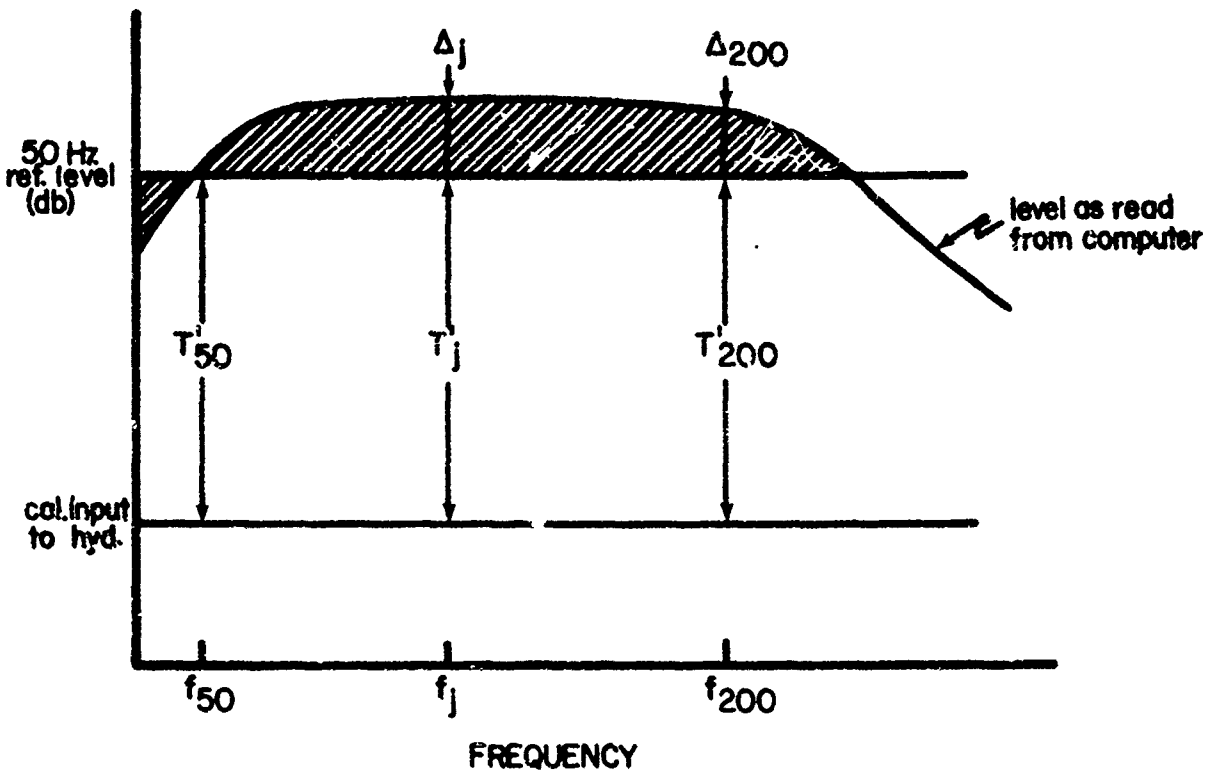

$T'_j = T'_{50} + \Delta_j$

Figure 7. Pre-Process Calibration System Transfer Function

Table 4 shows a typical calibration table prepared from an injection of a constant voltage at the center frequencies of the third octave bands of interest.

Returning to the general equation, for any given frequency the equation becomes

$$(LS)_j = X_j - S_h - G_c - (T_1)_j - T'_j - (BWC)_j \qquad (4.2\text{-}2)$$

Substituting equation (4.2-1) yields:

$$(LS)_j = X_j - S_h - G_c - T'_{50} - \Delta_j - (BWC)_j \qquad (4.2\text{-}3)$$

Since the automatic calibration period determines the transfer function at the 50 Hz reference frequency every six hours, equation (4.1-8) can be substituted for T'_{50} to give the general equation:

$$(LS)_j = X_j - S_h - G_c - \Delta_j - (BWC)_j - [X'_{50} - C'_n - G'_{c_n}] \qquad (4.2\text{-}4)$$

Equation (4.2-4) is implemented by the computer program and converts each of the third octave band outputs to average spectrum levels reference to a microbar.

4.3 Automatic Calibration

The program performs automatic calibration of two calibration frequencies once every six hours. The two mixed frequencies, 50 and 200 hertz are band-passed through the third octave filters (bands 36 and 42 on 80:1 playback) and detected through the General Radio analyzer using a 10 second average.

The calibration sequence lasts for a period of 5 minutes. The program detects the calibration phase by a frequency modulated on the time code carrier. This frequency passes through a narrow band filter on the control function indicator board and into the computer as a bit indication. Once this bit is set, the program enters a calibration sequence for a five minute period, the duration of the calibration sequence. The mixed 50 and 200 hertz frequencies which passed through the third octave filters are averaged on the

ACODAC SYSTEM "A" CALIBRATION

TABLE 4

Sheet 1

TIME				FREQUENCY (Hz)	HYDROPHONE #1			HYDROPHONE #2			HYDROPHONE #3		
Start		Stop											
Hr.	Min.	Hr.	Min.		V_1	V_2	V_3	V_1	V_2	V_3	V_1	V_2	V_3
0	00	0	05	12.5	.503	.243	.355	.503	.250	.4	.503	.237	.368
0	05	0	10	15.7	.505	.279	.462	.505	.286	.478	.505	.280	.490
0	10	0	15	19.8	.503	.340	.725	.503	.341	.722	.503	.345	.753
0	15	0	20	25.	.503	.363	.836	.503	.358	.830	.503	.368	.868
0	20	0	25	31.4	.503	.393	1.027	.503	.390	.990	.503	.395	1.059
0	25	0	30	39.5	.503	.412	1.162	.503	.393	1.111	.503	.417	1.192
0	30	0	35	49.8	.503	.427	1.265	.503	.407	1.188	.503	.435	1.295
0	35	0	40	62.5	.503	.441	1.35	.503	.418	1.285	.503	.461	1.370
0	40	0	45	79.0	.504	.456	1.424	.504	.413	1.366	.504	.460	1.441
0	45	0	50	92.0	.504	.568	1.462	.504	.452	1.395	.504	.471	1.481
0	50	0	55	125.	.501	.490	1.518	.501	.465	1.421	.501	.497	1.526
0	55	1	00	157.	.503	.499	1.528	.503	.477	1.433	.503	.505	1.534
1	00	1	05	198.	.503	.519	1.496	.503	.500	1.409	.503	.527	1.497
1	05	1	10	250.	.504	.527	1.452	.504	.508	1.364	.504	.529	1.449
1	10	1	15	314.	.504	.535	1.342	.504	.517	1.258	.504	.539	1.334
1	17	1	22	CAL									

NOT ORIGINAL DATA

NOTES: Hydrophone #3 would read zero output on occasions and return to normal after moving connecting wires. Hydrophone #6 seems to have a higher gain than the others

At 62.5 Hz and 125 Hz the readings would drift possibly due to 60 Hz pick up.

ACODAC SYSTEM "A" CALIBRATION

TABLE 4

Sheet 2

TIME Start Hr.	TIME Start Min.	TIME Stop Hr.	TIME Stop Min.	FREQUENCY (Hz)	HYDROPHONE #1 V_1	HYDROPHONE #1 V_2	HYDROPHONE #1 V_3	HYDROPHONE #2 V_1	HYDROPHONE #2 V_2	HYDROPHONE #2 V_3	HYDROPHONE #3 V_1	HYDROPHONE #3 V_2	HYDROPHONE #3 V_3
0	00	0	05	12.5	.503	.260	.373	.503	.234	.332	.503	.695	.332
0	05	0	10	15.7	.505	.293	.492	.505	.265	.440	.505	.639	.445
0	10	0	15	19.8	.503	.348	.739	.503	.319	.671	.503	.677	.707
0	15	0	20	25.	.503	.359	.842	.503	.336	.722	.503	.687	.822
0	20	0	25	31.4	.503	.383	.999	.503	.359	.932	.503	.760	1.006
0	25	0	30	39.5	.503	.395	1.11	.503	.376	1.050	.503	.743	1.145
0	30	0	35	49.8	.503	.407	1.198	.503	.390	1.145	.503	.690	1.248
0	35	0	40	62.5	.503	.421	1.26	.503	.404	1.22	.503	.7	1.325
0	40	0	45	79.	.504	.441	1.34	.504	.442	1.296	.504	.679	1.390
0	45	0	50	92.	.504	.448	1.379	.504	.438	1.339	.504	.688	1.436
0	50	0	55	125.	.501	.478	1.434	.501	.464	1.401	.501	.696	1.478
0	55	1	00	157.	.503	.491	1.446	.503	.475	1.418	.503	.702	1.472
1	00	1	05	198.	.503	.517	1.411	.503	.499	1.398	.503	.665	1.441
1	05	1	10	250	.504	.513	1.362	.504	.506	1.358	.504	.648	1.390
1	10	1	15	314	.504	.525	1.247	.504	.518	1.253	.504	.594	1.266
1	17	1	22	CAL									

See sheet 1 for further information

NOT ORIGINAL DATA

ACODAC SYSTEM "B" CALIBRATION

TABLE 4

Sheet 3

TIME Start Hr.	TIME Start Min.	TIME Stop Hr.	TIME Stop Min.	FREQUENCY (Hz)	HYDROPHONE #8 V_1	HYDROPHONE #8 V_2	HYDROPHONE #8 V_3	HYDROPHONE #9 V_1	HYDROPHONE #9 V_2	HYDROPHONE #9 V_3	HYDROPHONE #10 V_1	HYDROPHONE #10 V_2	HYDROPHONE #10 V_3
0	00	0	06	12.5	.506	.234	.355	.506	.246	.368	.506	.246	.367
0	06	0	11	15.7	.505	.267	.454	.505	.280	.479	.505	.286	.483
0	11	0	16	19.8	.506	.325	.698	.506	.333	.719	.506	.331	.728
0	16	0	21	25.	.506	.342	.812	.506	.352	.832	.560	.351	.841
0	21	0	26	31.4	.506	.365	.977	.506	.374	.990	.506	.370	.996
0	26	0	31	39.5	.506	.380	1.10	.506	.389	1.109	.506	.383	1.106
0	31	0	36	49.8	.505	.396	1.193	.505	.402	1.199	.505	.395	1.193
0	36	0	41	62.5	.506	.410	1.274	.506	.421	1.277	.506	.410	1.268
0	41	0	46	79.0	.506	.430	1.350	.506	.442	1.357	.506	.430	1.340
0	46	0	51	92.0	.505	.455	1.394	.505	.455	1.398	.505	.442	1.381
0	51	0	56	125.	.505	.472	1.461	.505	.479	1.451	.505	.467	1.439
0	56	1	01	157.	.505	.484	1.473	.505	.494	1.462	.505	.482	1.449
1	01	1	06	198.	.505	.508	1.444	.505	.515	1.419	.505	.504	1.410
1	06	1	11	250	.505	.516	1.399	.505	.521	1.366	.505	.514	1.361
1	11	1	16	314	.505	.527	1.283	.505	.529	1.241	.505	.523	1.236
1	16	1	21	CAL	NOTE:	THIS	CAL MAY BE	BAD.					
1	22	1	27	CAL									

NOT ORIGINAL DATA

NOTE: At 62.5 Hz and 125 Hz there was a lot of 60 Hz pickup and the data had to be estimated in the last place.

NOTE: Input #4 was disconnected during initial portion of the 62.5 Hz test.

NOTE: V_1 = input to hydrophone; V_2 = output from hydrophone; V_3 = output from amplifiers.

ACODAC SYSTEM "B" CALIBRATION

TABLE 4

Sheet 4

TIME				FREQUENCY (Hz)	HYDROPHONE #11			HYDROPHONE #12			HYDROPHONE #13		
Start		Stop											
Hr.	Min.	Hr	Min.		V_1	V_2	V_3	V_1	V_2	V_3	V_1	V_2	V_3
0	00	0	06	12.5	.506	.226	.350	.506	.266	.393	.506	.277	.379
0	06	0	11	15.7	.505	.260	.436	.505	.307	.520	.505	.313	.498
0	11	0	16	19.8	.506	.315	.677	.506	.364	.800	.506	.366	.746
0	16	0	21	25.	.506	.337	.796	.506	.387	.938	.506	.383	.863
0	21	0	26	31.4	.506	.362	.996	.506	.413	1.125	.506	.401	1.022
0	26	0	31	39.5	.506	.380	1.085	.506	.428	1.260	.506	.414	1.134
0	31	0	36	49.8	.505	.397	1.173	.505	.440	1.350	.505	.422	1.215
0	36	0	41	62.5	.506	.415	1.550	.506	.455	1.422	.506	.434	1.280
0	41	0	46	79.0	.506	.433	1.550	.506	.470	1.488	.506	.448	1.343
0	46	0	51	92.0	.505	.446	1.363	.505	.477	1.517	.505	.458	1.375
0	51	0	56	125.	.505	.471	1.422	.505	.494	1.552	.505	.479	1.420
0	56	1	01	157.	.505	.485	1.437	.505	.504	1.556	.505	.489	1.428
1	01	1	06	198.	.505	.508	1.398	.505	.522	1.489	.505	.508	1.391
1	06	1	11	250.	.505	.516	1.349	.505	.527	1.428	.505	.516	1.342
1	11	1	16	314.	.505	.525	1.240	.505	.534	1.300	.505	.525	1.229
1	16	1	21	CAL			BAD CALIB	RATION					
1	22	1	27	CAL									

For additional information, see notes at bottom of Sheet 3.

NOT ORIGINAL DATA

General Radio RMS detector. The following describes the sequence of events that occur for the five minute calibration period.

Minute 1 Idle phase: gain settings are indeterminable. System allows one minute for gain to be settled in preamplifier.

Minute 2 Gain-1: highest gain setting, lowest signal level. Five 10-second averages collected for one minute.

Minute 3 Gain-2: next lower gain setting, next higher signal level. Five 10-second averages collected for one minute.

Minute 4 Gain-3: next lower gain setting, next higher signal level. Five 10-second averages collected for one minute.

Minute 5 Gain-4: lowest gain setting, highest signal level. Five 10-second averages collected for one minute.

At the start of the calibration period, the program sets up a one minute wait period to allow for the settling of the capsule preamps to the highest gain setting and the lowest signal level. At the start of minute 2, the program starts the 10 second integration cycle of the General Radio Analyzer. At the completion of the 10 second period, the program temporarily stores the integrated values of the 50 and 200 Hz signals, waits two seconds and starts the next integration cycle. This process continues for four minutes storing the results of a 10-second integration period for the 50 and 200 Hz bands. The program then computes the mean μ_G for each of the gain settings and for each frequency. Thus, for the first gain setting of minute 2 (gain 1), the mean, μ_G, is:

$$\mu_{G1} = \frac{1}{N} \sum_{N=1}^{5} [B_j(36)_1]_N \tag{4.3-1}$$

from the general equation:

$$\mu_{Gk} = \frac{1}{N} \sum_{N=1}^{5} [(B_j)_k]_N \tag{4.3-2}$$

where:

B_j = the output of the General Radio Analyzer in db

j = Band 36 for 50 Hz and Band 42 for 200 Hz

k = 1, 2, 3, 4 representing the four gain settings of the preamplifier

N = 5, the number of integrations

Figures 8 and 9 illustrate the timing of the integration periods for the 10 second averages.

The purpose of the calibration is to determine the value of the transfer function of the Geotech recorder and Sangamo playback unit where a given input signal is applied to the data amplifier and is recorded at a known gain. If any dynamic changes have occurred between the recording and playback of an input signal from the hydrophone, the calibration of a known signal on the same recording shall also be subjected to the same level change. Since the true level of the calibration signal is known, then the ambient noise signal coming from the hydrophone can be corrected to reflect this dynamic change. Therefore, the true hydrophone signal can be reconstructed without distortion from recording and playback.

If no dynamic changes have occurred from recording to playback, or if no hardware malfunctions have occurred, the four calibration levels for the two frequencies should not vary more than $\underline{.5}$ to $\underline{1}$ db through the entire range from the expected values of the cal levels and gain settings. If this is true, then all 20 values (5 integrations times 4 levels) for each frequency will be averaged together to obtain one value which will then be

Minute 1 Idle Phase	Minute 2 Gain-1	Minute 3 Gain-2	Minute 4 Gain-3	Minute 5 Gain-4
No Processing	Highest Gain Lowest Level	Next Lower Gain Next Higher Level	Next Lower Gain Next Higher Level	Lowest Gain Highest Level

Figure 8. Acodac Calibration Phase for Five Minute Duration

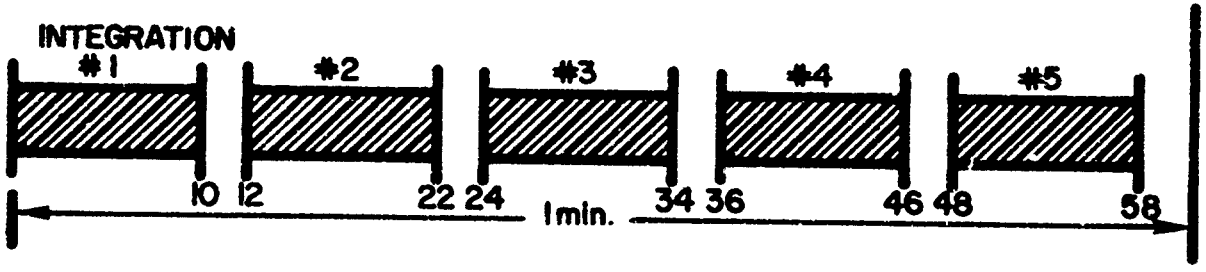

Typical time spacing for 50 and 200 Hz calibration signals at 10 second intergration periods through the General Radio Analyzer.

Figure 9. Typical Time Spacing for 50 & 200 Hz Calibration Signals

used in the calibration equation to determine the transfer function of the Geotech and Sangamo recording systems.

However, the five integration results for each level are first tested to observe if these values are within the tolerance range of the expected value (obtained from a knowledge of the gain setting and the voltage level). If the five integrated values for any given level fall beyond this tolerance range, then the particular cal level will be suspect of malfunction and excluded from the running average. This event will be flagged in the program and the values printed on the teletype. This is one method of determining hardware electronic malfunctions in the ACO-DAC capsule.

Once the calibration data is acquired and the transfer functions computed, a calibration summary will be printed on the teletype for purposes of operator examination. See Fig. 10 for sample printout.

Two tests are applied to the calibration data to insure validity of information during the calibration phase.

(1) The results of the five integrations within the minute interval are summed, and the sum is compared to each of the five - 10 second integrations of that interval. If any of the 10 second averages are greater than the applied tolerance, in this case 1 db, the entire one minute interval is rejected. If the interval passes the tolerance test, the mean of the five integration values is computed and is used in the computation of the transfer function.

(2) A gain check is then made to insure that the proper gain level was applied at the correct minute interval. This check is necessary since the calibration signal level injected at the specific minute interval forces the gain to switch to the proper range corresponding to the level of the signal. That is, an injected -41 db cal level should cause the amplifier to switch

to the highest gain range of 40 db. An injected level of -31 db should correspondingly cause the gain to switch to a 30 db level. If the computer program were not in sync with the level switching, then improper gain settings would be applied to the cal signal levels thus resulting in an erroneous transfer function value.

During the early development stages of the third octave analysis program, the transfer function resulting from a six hour calibration sequence was injected into the system equation when converting raw ambient noise data to microbar levels. The choice was left to the operator during the playback phase to decide whether to allow the new transfer function to be inserted into the system equation, or to keep the previously computed transfer function. The operator's decision was based on a quick analysis of the calibration summary printout (now called Post Analysis Summary Printout, Fig. 10). It was felt that the analysis of the data required more acoustical knowledge of the system than might be available at the level of the operator to make valid decisions. The program was then changed to print out the computed transfer function during the calibration phase, store the transfer function in the current digital output record and then proceed automatically ahead digitizing the raw ambient noise data.

The current program prints out the following calibration sequence message:

```
1200 CALIBRATION IN SEQUENCE
TRANSFER FUNCT:  OLD = 38.2  NEW = 38.5
TOL USED = 1.0
CALIBRATION COMPLETE
```

The printout shows the operator the previously computed six hour calibration transfer function as well as the current computed value along with the value of the tolerance, in db, used to accept or reject signal levels in

computing the mean of the levels. If all of the four minute intervals (20 data points total for each frequency) of either the 50 or 200 hertz signal levels are unable to pass the tolerance test, then the program will print:

NO USABLE 50 HZ DATA

NO USABLE 200 HZ DATA

CALIBRATION COMPLETE

If the above condition occurs, the program will store the last good computed transfer function in the output data record.

4.3.1 Obtaining the Initial Value Transfer Function

The initial value for the system transfer function is inserted in the program during the initialization phase and prior to the playback phase. This value is obtained by actually playing the ambient noise tape through the system at various six hour calibration intervals through the whole deployment to obtain a mean value for the transfer function. This value is then inserted in the program and used through the entire acquisition phase.

Plans are being implemented to record the pre-calibration signal levels directly on the deployment data tape prior to system deployment along with at least two calibration sequences. This will preclude the necessity of preparing a pre-calibration tape on a separate recording which has been done in the past. There will still be a requirement to generate the same calibration data on a recording after the system has been recovered. Usually, there is insufficient tape remaining on data tapes to make this type of recording.

4.3.2 Selecting the Transfer Function from Either the 50 or 200 Hz Signals

As was previously stated, the transfer function can be computed using the 50 hertz or 200 hertz calibration levels.

Normally the 50 Hz signal is used if at least one of the four minute intervals passes the tolerance test. If all the four minute 50 Hz intervals fail to pass, the 200 Hz signal is used for the transfer function computation providing again that at least one of the four minute 200 Hz intervals passes the tolerance test.

If the 50 Hz signal is used, the transfer function, TF, computed is:

$$TF = T'_{50} = \frac{\sum_{n=1}^{4} (\overline{X}_{50})_n}{n} \qquad (4.3.2\text{-}1)$$

where n = the no. of minute intervals used in the mean; ($n \leq 4$). When the 200 Hz signal level is used, the transfer function must compensate for the difference in frequency response between the 50 Hz reference and the 200 Hz signal. This is done by subtracting the delta function value (Δ_j) at 200 Hz from the computed mean using the 200 Hz signal, or

$$TF = T'_{200} = \frac{\sum_{n=1}^{4} (\overline{X}_{200})_n}{n} - \Delta_{200} \qquad (4.3.2\text{-}2)$$

where $\overline{X}$ = 50 Hz mean of the minute interval n, n = 1 to 4

$\overline{X}_{200}$ = 200 Hz mean of the minute interval n

Δ_{200} = Term applied in db for the difference in frequency response between the 50 Hz reference and 200 Hz signal injected through system during pre-process calibration run.

The following table gives the calibration signal input levels for each of the data amplifier gain settings during the calibration sequence.

TABLE 5

CALIBRATION SIGNAL INPUT LEVELS

Minute During Cal Sequence	Input Level to Data Amplifiers 50 Hz	200 Hz	Amplifier Gain
1	0.0 VRMS	0.0 VRMS	N/A
2	.009V = -41DB	.009V = -41DB	+40 DB
3	.028V = -31DB	.028V = -31DB	+30 DB
4	.090V = -21DB	.090V = -21DB	+20 DB
5	.283V = -11DB	.283V = -11DB	+10 DB

(For the 1973 field operations, pre-emphasis at the higher frequencies was added to the two ACODAC Mod I systems. The new values for the 200 Hz calibration are -46 db, -36 db, -26 db, and -16 db rather than the above.)

4.4 Post Calibration Summary

The post calibration summary printout is used to evaluate the quality of calibration data used in the computation of the system transfer function. The evaluation is done subsequent to a hydrophone third octave process run and is used primarily to assist in the detection and analysis of hardware problems that may have occurred in the system either during the deployment or playback phase. Figures 10 and 11 show typical printouts. Figure 11 shows obvious problems from the number of 99.9's that appear in various columns.

A considerable amount of information is presented to assist the analyst in determining system performance. For example, the mean of each minute interval is given for both the 50 and 200 hertz signals along with the computed

POST CALIBRATION SUMMARY PRINTOUT

MED.IA2
HYD.2

```
CAL TIME:        57

50 HZ
MINUTE:        1        2        3        4

MEAN:
               37.6     40.6     40.3     40.3

TP5:           99.9     41.6     41.3     41.3

NO. INTERVALS USED:    3

TP50=  41.4

GAIN:        40.0     30.0     20.0     10.0

GAIN ERROR:  0        0        0        0

ERROR(50 HZ):    I1       I2       I3       I4       I5

MINUTE(1):     -28.8      6.9      7.7      7.2      6.9

MINUTE(2):       .0       .0       .0       .0       .0

MINUTE(3):       .0       .0       .0       .0       .0

MINUTE(4):       .0       .0       .0       .0       .0

200 HZ
MINUTE:        1        2        3        4

MEAN:
               34.3     41.2     40.7     42.0

TP2:           99.9     42.2     41.7     42.0

NO. INTERVALS USED:    3

TP50(F(200))=        42.0

ERROR(200 HZ):    I1       I2       I3       I4       I6

MINUTE(1):     -28.1      7.7      6.9      6.9      6.4

MINUTE(2):       .0       .0       .0       .0       .0

MINUTE(3):       .0       .0       .0       .0       .0

MINUTE(4):       .0       .0       .0       .0       .0

DELTA(200)(CAL)=     .5   DELTA(200)(PRECAL)= $$$$$

TP50=     -.6   TP50=    -2.0

OLD TP50= -10.3  NEW TP50=  41.4
OLD VAL USED
```

Figure 10. Post Calibration Summary Printout

POST CALIBRATION SUMMARY PRINTOUT

MED. IA2
HYD. 2

```
CAL TIME:        57

50 HZ
MINUTE:        1        2        3        4

MEAN:
               33.2     40.6     40.4     40.1

TP5:           99.9     41.6     41.4     41.1

NO. INTERVALS USED:    3

T'50=  41.4

GAIN:        40.0     30.0     20.0     10.0

GAIN ERROR: 0         0        0        0

ERROR(50 HZ):     I1       I2       I3       I4       I5

MINUTE(1):      -28.9      7.3      7.3      7.3      7.1

MINUTE(2):        .0       .0       .0       .0       .0

MINUTE(3):        .0       .0       .0       .0       .0

MINUTE(4):        .0       .0       .0       .0       .0

200 HZ
MINUTE:        1        2        3        4

MEAN:
               34.1     41.1     40.6     40.7

TP2:           99.9     42.1     41.6     41.7

NO. INTERVALS USED:    3

TP50(F(200))=        41.8

ERROR(200 HZ):    I1       I2       I3       I4       I6

MINUTE(1):      -28.6      6.9      7.2      7.2      7.2

MINUTE(2):        .0       .0       .0       .0       .0

MINUTE(3):        .0       .0       .0       .0       .0

MINUTE(4):        .0       .0       .0       .0       .0

DELTA(200)(CAL)=     .5  DELTA(200)(PRECAL)= $$$$$

T'50=     -.6  T'50=    41.8

OLD T'50= -10.3  NEW T'50=  41.4
OLD VAL USED

CAL TIME:      201

NO USABLE 50 HZ DATA
```

Figure 11. Post Calibration Summary Printout

transfer functions for each minute interval. That is:

TP5 = 50 Hz transfer function

TP2 = 200 Hz transfer function

The injected gain for each minute interval is given. If the proper gain level is not injected or detected during playback for the right minute interval, the program prints a 99.9 in the associated minute column for both the gain and the transfer function, since the transfer function for the particular minute interval cannot be computed without the correct gain. The gain error printout indicates whether the system had a gain redundancy error in decoding the gain bits. If this occurs, a negative gain is printed on this line for any minute interval in error.

Along with the mean for the 50 and 200 hertz signals, information is provided that show the amount each integration interval varies from the tolerance used. Since the levels for each of the five 10-second integration intervals should be the same for each minute, with only slight variations, any large variations of levels around the mean value indicate possible problem areas in the IPV electronics system. Also, it is noted that the system transfer function can be computed using the 200 hertz signal if it is found that the 50 hertz signal levels exceed tolerance limits. If the 200 hertz signal is used, an important factor in the computation of the transfer function is the selection of the delta function value for the 200 hertz signal. Since the 50 hertz signal is the reference, and since the delta function value accounts for the system frequency response at 200 hertz, the computed transfer function would be in error if the delta function were in error.

5. THIRD OCTAVE ANALYSIS PROGRAM DESCRIPTION

5.1 General Specifications

The playback system, figure 12, is designed to be controlled by the digital computer using a single hydrophone channel input connected to the system for processing through the GR 1921 Real Time Analyzer (1/3 octave). Analog data from the hydrophone channel is digitized through the analyzer and provided to the computer for further processing. The computer executes a sequence of events to convert the raw ambient noise data from 15 third octave bands represented by 10 second average spectrum levels to ambient noise levels reference to a microbar. The events are as follows:

(1) Initiate and stop integration cycles in the analyzer at specific intervals of time dictated by the analog data timing sequence.

(2) Shift 15 channels of data from outputs of the analyzer accumulator sequentially.

(3) Detect and act upon control signals coming from the playback channel which represent (a) start of data signals, (b) overload signals, (c) calibration signals, and (d) end of data signals.

(4) Read time in days, hours, and minutes each minute from the time code read.

(5) Read state codes from the time code reader.

(6) Convert and correct the incoming data to average spectrum level reference to a microbar.

(7) Identify and tag all values from any integration cycle that may contain bad data.

(8) Perform automatic system calibration every six hours and store the results on hard copy printout and on digital magnetic tape.

(9) Provide error diagnostic message printout on system performance.

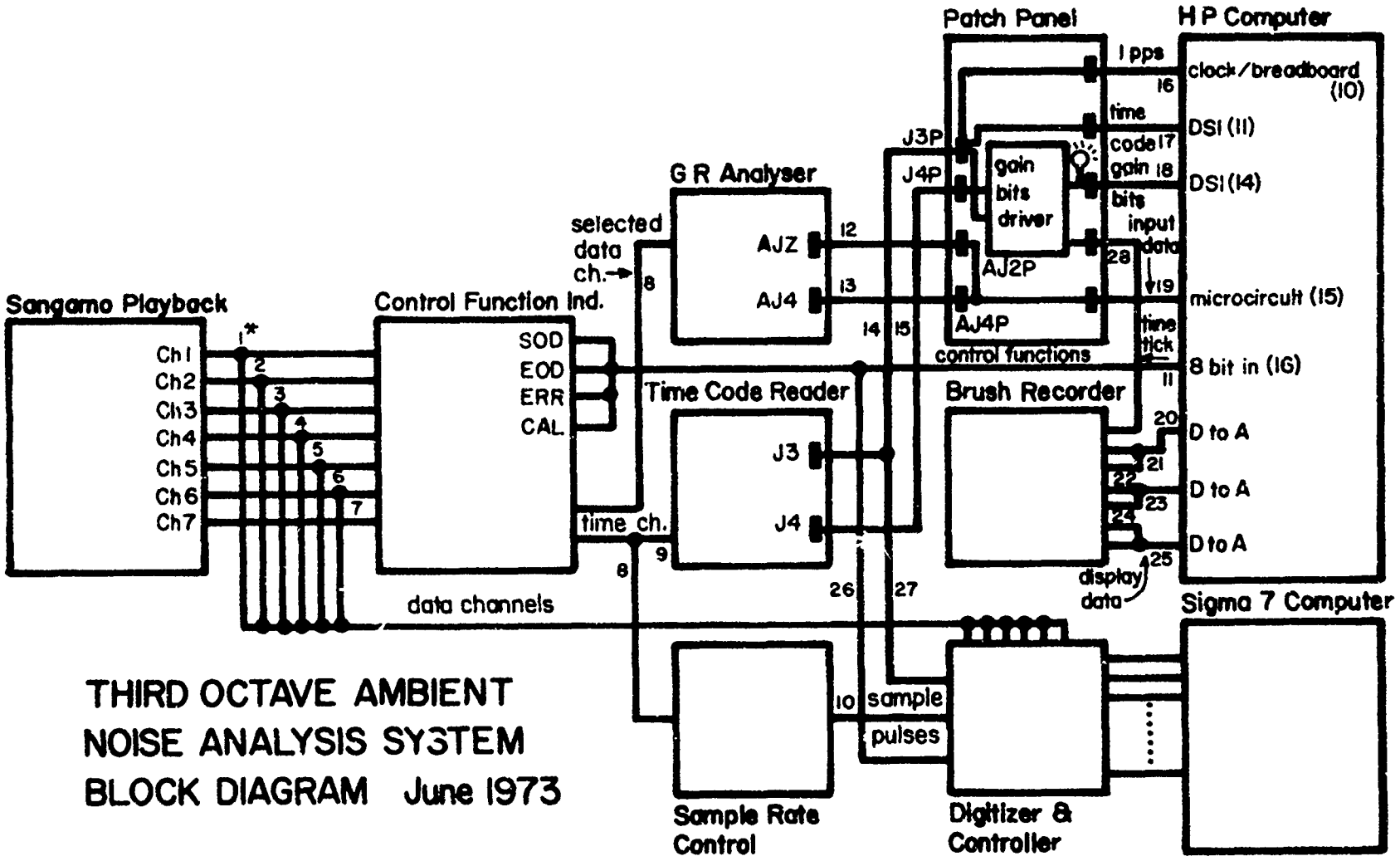

*Small numbers refer to cable numbers

Figure 12. Third Octave Ambient Noise Analysis System

(10) Plot the corrected spectrum levels of selected third octave bands on an analog plot device.

(11) Dump 7-minute block records of data onto digital magnetic tape.

These events are controlled by a program employing a real time executive which operates in a foreground-background mode in order to schedule the various internal sequences. The foreground section of the program responds to all active interrupts from the devices. The priority interrupt system is used to schedule the servicing of each device according to the rate at which information is flowing to and from the computer. Higher speed devices are given higher priority servicing over slower speed devices. The background mode performs the necessary conversion and correction of data, initiates or terminates various program modes of operation, and monitors the operator console for command inputs.

5.2 Computer Timing

A one pulse per second (1 pps) signal is supplied to the computer from the IRIG-C time code track of the ACODAC Analog tape by the time code generator. This signal is the basis for all the computer timing and is used to schedule all events such as starting the integration cycle, printing out error messages, and plotting analog data.

The 1 pps signal to the computer appears in playback time as a signal generated each 1/80th of a second, or 80 pps (.0125 secs). This is because the analog tape recorded at 15/160 inches per second is played back at 7.5 inches per second - a speed up of 80.

5.3 Integration Timing Control

Part of the one pulse per second interrupt routine is used to start successive 10 second integrations every 12 seconds by sending out a control pulse to the General Radio 1921 Real Time Analyzer. The analyzer in turn uses its internal clock to start the 10 second integration rate. During

this time, the analyzer operates by sampling each input channel from the GR 1925 Multifilter (a part of the GR 1921 system) and supplies these samples to the digital circuits that are time shared on all channels. The detector simultaneously computes the rms level for each filter channel by taking 128 samples during the 1/8 second integration period (10 seconds in hydrophone time). The samples are converted to digital binary numbers and squared. The squared values are accumulated in a memory register where spaces are provided for all channels. At the end of the integration period, the sum-of-squares value is converted to decibels for output presentation. At this time the computer receives an interrupt enabling transfer circuits to strobe the data into the computer. This process is repeated continuously while the program is in the acquisition phase.

During this process, five integrations are accumulated every minute and stored for conversion and correction to microbar levels. Since the data amplifiers can shift gain with respect to the level of the input ambient noise signal, pr se synchronization must be maintained between the integration process and the IRIG-C time code frame. This is necessary since the input signal to the data amplifiers, during the deployment phase, is integrated over a minute period to determine the gain range for the amplifier. At the end of the minute frame, if the signal level exceeds the dynamic range of the present gain setting, the electronics in the instrument pressure vessel (IPV) automatically switches the amplifier gain range and at the same time injects the new gain setting, represented by two bits per hydrophone, into the time code bit stream in the control function position of the time frame.

Since the program reads the time code and gain settings at the start of the new minute frame, the program now applies the new gain settings to

the new set of five integrations which will be completed at the end of the new minute frame.

However, if synchronization is not maintained between the five integrations and the reading of the gain bits, an improper gain correction will be applied to the raw ambient noise data. This phenomenon will appear as a step function in the data if observed on the Brush analog plot.

Many conditions have been observed which cause program timing to loose synchronization. Time code bit drop-out is a possible occurrence resulting in the computer dropping a clock pulse and thus losing the 60 second count during the minute frame. Although redundant gain bits were added to the electronics for each hydrophone amplifier to detect gain bit errors, if a gain bit error is detected, the program must reject the present gain setting and use the previous minute gain setting. This of course can result in erroneous spectrum levels from the five integrations.

Therefore, it should be noted that no foolproof method has been devised to account and correct for all possibilities occurring, although the program does make elaborate synchronization checks. It is necessary for a trained analyst to examine the data output to verify the computations.

5.4 Playback Process Time and Throughput Rate

Most ACODAC moorings have been deployed for periods of 10 days (The maximum data acquisition time is actually 10 2/3 days - 7200 feet of magnetic tape at 15/160 inches per second). Because of the long deployment duration and the use of slow recording speeds of the analog recorder (15/160 ips), an 80:1 time compression ratio has been used to accelerate ambient noise processing.

In the accelerated process, each second of hydrophone time is represented by .0125 seconds. The 10 second (hydrophone time) integration period would then be completed in .125 seconds.

There is a minimum of 150 msecs to read in 15 bands (16 bits/band) of data and convert and process the data before a new integration can be started. This period is broken down as follows:

Integration period	.125 seconds
Time between integrations	.025 seconds
Total time	.150 seconds

The throughput rate then becomes:

$$\frac{15 \text{ words}}{.15 \text{ secs}} = 100 \text{ words/sec.}$$

It can be seen that at this slow throughput rate there remains considerable time in the background to accomplish many job tasks such as data conversion, correction, analog plotting, and error detection.

5.5 Digital Output Magnetic Tape Data Records

5.5.1 Data Recording

Data records represent a 7 minute (hydrophone time) period. Each record is 1092 words long and are written at 800 bpi. As an example, assume there are a total of 10 days of recorded data on the analog ambient noise tape. Since this period represents 10 days X 24 hours/day X 60 min/hour = 14,400 min, the total number of data records per hydrophone channel is:

$$\frac{14400}{7} = 2057 \text{ records}$$

At a recording density of 800 bpi, each record occupies:

$$1092/800 = 1.36 \text{ inches}$$

plus an inter-record gap of .75 inches, or a total record length of 2.11 inches.

The total length recorded on tape per hydrophone will be:

2057 recs X 2.1 inches = 4320 inches

or approximately 400 feet.

At this rate, approximately 6 hydrophone data channels could be recorded on one reel.

In practice, one hydrophone is recorded on a 1200 foot reel since the data tape is then submitted to other computer processes for editing.

5.5.2 Data Record Format

Data records are arranged with a general header label, table 6 of 120 words written at the beginning of the tape representing vital statistics of the hydrophone being processed and containing pertinent information with regards to the ACO-DAC deployment.

Each succeeding record represents actual data arranged in a 1092 word record. See table 7. Each minute of the data record contains a six word header identifying the date-time group, data type (0 for ambient noise data, 1 for calibration data), gain setting (2 bits), and transfer function computed for the p[illegible]ar six hour interval. The header is then followed by five integrations for that specific minute arranged in successive 15 bands for each integration. Each integration represents a 10 second average for each of 15 bands in db re: microbar. This procedure is repeated for the next successive six minutes. Therefore, for a seven minute record, there are five integrations per minute, or a total of 35 integrations.

TABLE 6

ACODAC HEADER LABEL

Word	Variable Name	Function	Field	Type
1,2	MOOR	Mooring type: A=0, B=1	2 alpha	A format
3,4	IDEPLO	Deployment number	2 alpha	A format
5,6	ISHIP	Launch ship	2 alpha	A format
7,8	ICRUZ	Cruise number	2 alpha	A format
9,10	ISTA	Hydrophone station (1-6)	2 alpha	real
11,12	HYSER	Hydrophone serial number	4 digit	real
13,14	DEPTH	Hydrophone depth	4 digit	real
15,16	HYCAL	Hydrophone sensitivity	(-xx.x)	real
17,18	TPRIM	Pre-calibration transfer function	(xx.x)	real
19,20	DDAY	Deployment launch day number	(xxx.)	real
21,22	DYEAR	Deployment launch year	(xx.)	real
23,24	SDAY	Recorder start time: day number (GMT)	(xxx.)	real
25,26	SHOUR	Recorder start time: hours (GMT)	(xx.)	real
27,28	SMIN	Recorder start time: minutes (GMT)	(xx.)	real
29,30	GSYNC	GSYNC=1 means time recorded with data output which has been converted to GMT. GSYNC=0 means time is in relative time.	(x.)	real
31,32	EDAY	Recovery day number	(xxx.)	real
33,34	EGMT	Recovery time (GMT)	(xxxx.)	real
35,36	AMINB	Minimum 1/3 octave band displayed	(xx.)	real
37,38	AMAXB	Maximum 1/3 octave band displayed	(xx.)	real

ACODAC HEADER LABEL (cont.)

Word	Variable Name	Function	Field	Type
39,40	ONTIM	Capsule recorder on-time	(xx.)	real
41,42	DUTY	Recorder duty cycle	(.10-1.0)	real
43,44	TZONE	Local time zone (at deployment)	±x.	real
45,46	DRIFT	Time drift constant	1 E -6	real
47,48	DLAT	Deployment latitude: Degrees	xx.	real
49,50	XLAT	Deployment latitude: minutes	xx.x	real
51,52	DLON	Deployment longitude: Degrees	xx.	real
53,54	XLON	Deployment longitude: minutes	xx.x	real
55,84	BEC(15)	Band equalization correction 15 bands	xx.x	real
85,114	DELTA(15)	Pre-calibration delta function 15 bands	xx.x	real
115,116	ATAPL	Analog tape ID	xxxxx.	real
117,118	DTAPE	Digital tape ID (data)	xxx.	real
119,120	GTAPE	Digital tapeID (gains)	xxx.	real

TABLE 7

DATA RECORD FORMAT ACODAC OUTPUT FROM ACDI

Digital Magnetic Tape Record of analog to digital conversion process using General Radio 1921 Analyzer.

Word	Variable	Type
	Minute #1	
1	Day	Integer
2	Hour & Minute (24 hour clock)	Integer
3	Data Type (0 or 1)	Integer
4	Gain setting (0, 1, 2, or 3)	Integer
5,6	Transfer Function T'	Floating Point
7-156	Integrations #1-5 (5 integrations per minute for 15 third octave bends), 75 values total. Each 10 second integration period results in 15 band values in db re: 1 volt/microbar.	Floating Point
	Minute #2 through #7 Same format as above.	
	Total number of words = 1092	

where:

Day, hour, and minute are read from the time code reader.

Data type equals 1 for calibration data (5 minutes per 6 hours) or 0 for acoustic data.

Transfer function (T) is computed from the calibration data during the calibration phase.

Gain settings are read from the state codes by the Time Code Reader and are either 0, 1, 2, or 3 representing 10, 20, 30, or 40 db respectively. A negative integer (-1, -2, -3) indicates that the previous 1 minute gain setting was used. Since a "-0" cannot be represented, a gain of 10 db (both bits 0) will be represented by a -32767 which is equivalent to setting bit 15, sign bit, to one.

Integrations 1 through 5 represent the average spectrum level in db of 15 filter bands. This represents a total of 75 values for the 5 integration periods, or 150 words in floating point since the values can range from 35 to -95 db.

The above format is repeated for each minute interval for 7 minutes. The entire record length is thus representative of a 7 minute period and is recorded as 1092 words on magnetic tape for each record. A double end-of-file is written at the end of the deployment.

If signal overload occurs during any integration period, the program will replace all actual band values with a 99.9 for all 15 bands.

A double end of file is inserted at the end following the last data record.

5.6 Program Modes

The program modes of operation are:

IDLE (ID)

ACQUISITION (AQ)

INITIALIZATION (IN)

TEST (TE)

TERMINATION (EN)

5.6.1 IDLE Mode

The IDLE mode is used as an interim mode between acquisition, test, or initialization. During this phase all active equipment interrupts are turned off, pointers and counters reset, and the program enters a wait loop for an operator command. No clock timing is available during IDLE since all program timing is obtained while the playback tape is in motion. Normally the tape unit is turned off during IDLE.

5.6.2 ACQUISITION Mode

The ACQUISITION phase is selected to start the ambient noise data processing of one hydrophone through the 1921 General Radio Analyzer system. ACQUISITION is the main program loop which schedules the digitizing and processing of the ambient noise data, services all active interrupts from the equipment, provides diagnostic error message summaries to the operator, and plots the corrected third octave frequency bands. While in

this mode a digital magnetic tape is written containing the 10 second averages corrected to microbar levels.

Continuous data integrations through the GR analyzer will be sequenced as long as this mode is selected and the analog tape is in forward motion.

5.6.3 INITIALIZATION Mode

This mode is used to enter various initialization parameters to the program via the teletype keyboard. These data are entered and stored in memory and also printed as a header label record on the magnetic digital data tape.

Table 12 shows a list of all entries required to complete the initialization phase. The operator has an option to go back and correct any particular line if the entry was made in error prior to the information being written on tape.

5.6.3.1 Data Array Entries

Two important data arrays are required as input during the initialization: (1) bandwidth corrections and (2) delta functions.

(1) The bandwidth corrections are applied as an array of numbers for the effective frequencies of interest being processed. Table 8 shows a table of third octave frequencies being used along with the bandwidth and the bandwidth correction. The bandwidth correction (BWC) was computed using the equation:

$$BWC = 10 \log \text{Bandwidth (BW)}$$

Table 9 shows the center frequencies for a standard set of third octave bands.

TABLE 8

SPECTRUM LEVEL CORRECTIONS FOR 1/3 OCTAVE FILTERS

Frequency	BW	10 log (BW)
10	2.31	3.6
12.5	2.77	4.6
16	3.69	5.6
20	4.62	6.6
25	5.76	7.6
32	7.37	8.6
40	9.23	9.6
50	11.50	10.6
63	14.50	11.6
80	18.40	12.6
100	23.05	13.6
125	27.7	14.6
160	36.9	15.6
200	46.2	16.6
250	57.6	17.6
320	73.7	18.6
400	92.3	19.6
500	115.0	20.6
630	145.0	21.6
800	184.0	22.6
1,000	230.5	23.6
1,250	277.0	24.6
1,600	369.0	25.6
2,000	462.0	26.6
2,500	576.0	27.6
3,150	739.0	28.6
4,000	923.0	29.6
5,000	1,150.0	30.6
6,300	1,450.0	31.6
8,000	1,840.0	32.6
10,000	2,305.0	33.6

TABLE 9

CENTER FREQUENCIES FOR THE 1/3 OCTAVE BANDS

Standard Band	Center Frequency (Hz)	Standard Band	Center Frequency (Hz)
5	3.162	28	631.00
6	3.981	29	796.30
7	5.022	30	1000.00
8	6.310	31	1259.00
9	7.944	32	1585.00
10	10.00	33	1995.00
11	12.59	34	2512.00
12	15.85	35	3162.00
13	19.95	36	3981.00
14	25.16	37	5010.00
15	31.63	38	6310.00
16	39.81	39	7944.00
17	50.22	40	10.00 KHz
18	63.10	41	12.59
19	79.44	42	15.85
20	100.00	43	19.95
21	125.90	44	25.22
22	158.50	45	31.62
23	199.50	46	39.81
24	251.20	47	50.10
25	317.00	48	63.10
26	398.10	49	79.44
27	501.00		

Actual filter characteristics are not ideal in the sense of completely rejecting signal components outside the nominal passband. The effective bandwidth of an actual filter such as the 1000 hertz third octave filter being used in the system is about 23% of the center frequency and the filter extends from 891 to 1122 hertz. This is approximately equivalent in determining the effective bandwidth of a third octave filter by injecting a white noise signal in the input. The white noise signal is uniform over a power-per-hertz bandwidth over a very wide frequency range. The effective bandwidth is then the total output power divided by the output power for a one-hertz bandwidth at the frequency of maximum response.

(2) The delta function is an array of numbers obtained during a pre-process calibration run (see paragraph 4.2) which is a correction factor to account for the frequency response of a given hydrophone within the dynamic range. Table 10 shows the delta function array used for a typical ACODAC deployment.

5.6.3.2 Hydrophone Sensitivity

The hydrophone sensitivity value used in the acoustic equation, equation 4.1-3, and entered during initialization was obtained from data derived from a calibration performed by the Underwater Sound Reference Division, Naval Research Laboratory, Orlando, Florida. Each hydrophone, ITC Model 8004, used in the ACODAC system was calibrated at temperatures and pressures shown in table 11. The hydrophone sensitivity value used in the initialization

TABLE 10

DELTA FUNCTION ARRAY FOR SYSTEM 1A1 (November 1972)

Third Octave Band No.	f/80	Hydrophone #1	#2	#3	#4	#5	#6
31	15.7	-7.0	-2.5	-5.0	-5.0	-8.0	-5.0
32	19.8	-3.5	0.0	-2.0	-3.0	-5.0	-2.0
33	24.9	-2.5	0.0	-1.0	-1.5	-4.0	-1.0
34	31.4	-1.5	.5	0.0	-2.0	-2.0	-.5
35	39.5	-.5	0.0	.5	0.0	-1.0	0.0
36	49.8	0.0	0.0	0.0	0.0	0.0	0.0
37	62.6	0.0	-.5	0.0	0.0	0.0	0.0
38	78.9	0.0	-1.0	-.5	-.5	0.0	-.5
39	99.3	0.0	-1.0	-.5	-.5	0.0	0.0
40	125.0	-.5	-.5	-.5	0.0	0.0	0.0
41	157.4	-1.0	0.0	-.5	0.0	0.0	0.0
42	198.1	-3.5	-.5	-2.0	.5	-1.0	1.0
43	249.4	-5.5	0.0	-3.5	0.0	-2.0	1.0
44	315.25	-10.0	-2.0	-8.5	-1.0	-5.5	-.5

NOTE: The Delta function arrays listed above for hydrophones 1 through 6, system 1A1, represent a system calibration during a run conducted in November 1972 and is only shown for illustrative purposes. These values will vary with respect to adjustments made to recorder/playback amplifier settings and head re-alignments.

TABLE 11

FREE-FIELD VOLTAGE SENSITIVITY
(Decibels re one volt per micropascal)
(Sensitivity values negative) - ITC Model 8004 Hydrophones - Unbalanced
Voltage across 470 ohm resistor at output of amplifier

	Serial 1				Serial 2				Serial 3			
	3°C		22°C		3°C		22°C		3°C		22°C	
Freq (Hz)	3.5 kPa	6895 kPa	3.5 kPa	6895 kPa	3.5 kPa	6895 kPa	3.5 kPa	6895 kPa	3.5 kPa	6895 kPa	3.5 kPa	6895 kPa
10	142.6	142.7	143.4	144.7	141.4	141.7	142.5	142.5	141.7	141.9	142.2	142.9
20	140.3	140.6	140.0	141.6	138.9	139.1	139.2	139.3	139.1	139.3	139.2	139.4
50	139.1	139.7	138.6	139.8	137.8	138.0	137.6	137.7	137.9	138.1	137.7	138.0
100	138.4	139.5	138.1	139.1	137.6	137.7	137.3	137.4	137.7	137.9	137.4	137.5
200	138.4	139.5	138.3	138.7	137.6	137.6	137.2	137.4	137.6	137.8	137.2	137.4
500	138.4	139.5	138.3	138.4	137.5	137.6	137.0	137.3	137.5	137.7	137.1	137.4
800	137.4	139.5	138.3	138.4	137.5	137.6	136.4	136.8	137.5	137.7	137.0	137.1
1000	138.4	139.5	138.3	138.4	137.5	137.6	135.5	136.8	137.5	137.7	137.0	137.1

	Serial 5				Serial 7				Serial 8			
10	141.8	142.0	142.8	143.3	141.9	142.1	142.7	142.7	142.0	143.1	142.3	143.3
20	139.3	139.2	139.3	140.9	139.4	139.6	139.4	139.5	139.0	140.2	138.9	140.3
50	137.9	138.0	137.7	139.4	138.3	138.2	137.8	137.8	138.2	138.8	137.7	139.2
100	137.8	137.9	137.3	139.0	137.8	138.0	137.5	137.6	137.9	137.9	137.6	138.8
200	137.6	137.7	137.2	138.9	137.8	137.9	137.5	137.5	137.8	137.8	137.5	138.7
500	137.6	137.7	137.1	138.5	137.8	137.7	137.5	137.5	137.8	137.8	137.5	138.4
800	137.6	137.7	137.1	138.4	137.7	137.6	137.2	137.2	137.8	137.8	137.1	137.8
1000	137.6	137.7	137.1	138.4	137.7	137.6	137.2	137.2	137.8	137.8	137.1	137.8

	Serial 9				Serial 10				Serial 11			
10	142.4	142.8	142.5	143.7	141.6	141.8	142.8	142.3	141.9	142.2	143.3	144.5
20	139.5	140.5	139.4	140.5	139.5	139.7	139.3	139.5	139.2	140.7	139.5	140.1
50	138.1	139.4	137.8	138.8	138.6	138.7	138.1	138.3	138.0	139.7	138.0	139.3
100	137.3	139.1	137.4	138.8	138.5	138.5	137.9	138.1	137.9	138.8	137.7	138.7
200	137.5	138.7	137.1	138.2	138.4	138.4	137.8	138.0	137.3	138.6	137.5	138.7
500	137.5	138.7	137.1	138.5	138.4	138.4	137.8	137.9	137.8	138.6	137.5	138.6
800	137.5	138.7	137.0	138.5	138.4	138.4	137.8	137.9	137.7	138.4	137.5	138.5
1000	137.5	138.7	137.0	138.5	138.4	138.4	137.8	137.9	137.7	138.4	137.5	138.5

(continued)

TABLE 11 (continued)

Freq (Hz)	Serial 12				Serial 13				Serial 14			
	3°C		22°C		3°C		22°C		3°C		22°C	
	3.5 kPa	6895 kPa	3.5 kPa	6895 kPa	3.5 kPa	6895 kPa	3.5 kPa	6895 kPa	3.5 kPa	6895 kPa	3.5 kPa	6895 kPa
10	141.7	141.8	141.3	142.3	141.9	142.0	142.7	142.4	141.3	141.4	141.8	142.1
20	139.4	139.7	139.5	139.8	139.6	139.7	140.0	139.8	138.9	138.9	138.8	139.0
50	138.5	138.8	138.4	138.6	138.5	138.5	138.8	138.4	137.7	137.9	137.4	137.6
100	138.5	138.6	138.1	138.4	138.4	138.4	138.4	138.2	137.5	137.6	137.3	137.4
200	138.5	138.5	137.9	138.1	138.4	138.3	138.4	138.1	137.5	137.5	137.0	137.4
500	[illegible]	138.4	137.9	138.0	138.4	138.2	138.1	137.9	137.3	137.3	136.9	137.3
800	138.0	137.9	138.0	138.2	138.2	137.6	137.6	137.9	137.2	137.0	136.9	136.9
1000	138.0	137.9	137.9	138.0	138.2	138.2	137.4	137.9	137.2	137.0	136.9	136.9

TABLE 11

FREE-FIELD VOLTAGE SENSITIVITY

(Decibels re one volt per micropascal)

Freq (Hz)	Serial 4				Serial 6			
	3°C		22°C		3°C		22°C	
	3.5 kPa	6895 kPa	3.5 kPa	6895 kPa	3.5 kPa	6895 kPa	3.5 kPa	6895 kPa
10	141.8	141.6	142.0	142.1	141.8	141.8	142.1	142.2
20	139.4	139.3	139.0	139.1	139.3	139.4	139.0	139.2
50	138.8	138.7	137.8	137.8	138.2	138.3	137.9	138.0
100	138.6	138.0	137.6	137.6	138.0	138.1	137.6	137.6
200	138.2	138.0	137.6	137.6	137.9	137.9	137.6	137.6
500	137.8	138.0	137.6	137.6	137.9	137.9	137.6	137.6
800	137.8	138.0	137.6	137.6	137.9	137.9	137.6	137.6
1000	137.8	138.0	137.6	137.6	137.9	137.9	137.6	137.6

ITC Model 8004 Hydrophones

Voltage across 470 ohm resistor at output of amplifier

Unbalanced

(Sensitivity values negative)

TABLE 12

SAMPLE PRINTOUT OF INITIALIZATION DATA ENTERED IN 1/3 OCTAVE PROCESSING PROGRAM

CARE X 12/72
II A4-1
processed 1/8/73
G.K.G.
X A 21


```
   0
CC ?
ID
   0
IDLE
   0
CC ?
IN
    MT UR:(DATA,GAIN):
    ENTER 0 FOR NO GAIN TAPE OUTPUT: 7,0

    LP UR #= 2

CAL DUMP UR=?
8

JUMP TO LINE CHANGE?

NO

1.  MOORING TYPE,DEPLOYMENT NO: 2A4  0019

2.  SHIP,CRUISE NO: NS   72-5

3.  HYDRO STA,SER NO, & DEPTH: 1 0001 0852

4.  HYDROPHONE SENSITIVITY:  -50.0

5.  PRE-CAL TRANSF. FUNCT. (TPRIM):  45.0

    CAL TOL=1.0

4 CAL LEVELS ARE:

-41.0  -31.0  -21.0  -11.0

ENTER CHANGE 1-4 (X,XX)
OR 0 FOR NO CHANGE

0

6.  DEPLOYMENT LAUNCH DAY NO, YEAR:  334,72

7.  RECORDER START TIME:(DAY #,HR,MIN:  3[illegible],[illegible]

    PROCESS IN RELATIVE TIME OR GMT
    RT=0 AND GMT=1:  0

8.  RECOVERY DAY NO., TIME(GMT):  349,1332

9.  MIN & MAX BAND DISPLAY:  31,45

10. LOC TIME ZONE, TIME DRIFT CONST:

11. DEPLOYMENT LAT (DEG,MIN):  18,49.0
```

```
12. DEPLOYMENT LONG (DEG,MIN):  -79,52.7

13.  HYDRO MFGR (6 ALPHA):  ITC

14.  HYDRO MODEL NO. (8 ALPHA):  ITC-8020

15. PLAYBACK TIME COMPRESSION (8 OR 80:1):  80

16. ANALOG TAPE ID:  1272

17. PRE-CAL DELTA FUNCTION
     ENTER ACTIVE BANDS ONLY; TERMINATE LIST WITH BAND NO=0
     BAND NO. (XX), VALUE (XX.X DB)

0

18.  BANDWIDTH CORRECTION: (50 BANDS VS 50.0 DB MAX
     ENTER ACTIVE BANDS ONLY; TERM LIST WITH BAND #=0
     XX,XX.X

31,5.62
32,5.
33,6.62
34,7.62
35,8.62
35,9.62
36,10.62
37,11.62
38,12.62
39,13.62
40,14.62
41,15.62
42,16.62
43,17.62
44,18.62
45,24.50
0

19. PARAMETER INSERTION SECTION
ENTER MAX 15 VALUES.
TERM WITH LINE=0


DEFAULT VALUES USED:
3,15 =MIN FRAME SYNC
4,36 50 HZ REF BAND NO
14, 1 HYD STA NO

0

20.  OBSERVATION ON-TIME & OFF-TIME
0,0 FOR CONTINUOUS (IN MIN): 0,0

DUTY CYCLE=100<-- CONTINUOUS


21. DIGITAL TAPE ID:(DATA & GAIN):  XA21

22. WANT BRUSH PLOT OUTPUT?

YES

ENTER SELECTED BAND # FOR EACH CHAN
AND LOWER PLOT LIMIT (DB); 4 BANDS MAX
FORMAT : XX,YY  WHERE X=BAND NO & Y= RANGE LOWER LIM(DB)
```

```
BRUSH CHAN:  1  BAND #,LOW LIM  36,-30.0

BRUSH CHAN:  2  BAND #,LOW LIM  39,-30.0

BRUSH CHAN:  3  BAND #,LOW LIM  38,-30.0

BRUSH CHAN:  4  BAND #,LOW LIM  42,-30.0

SELECTIONS MADE:

BAND #: 36  LIM: -30.0
BAND #: 39  LIM: -30.0
BAND #: 38  LIM: -30.0
BAND #: 42  LIM: -30.0

CAL LEVEL LOW LIM

0.0

ACCEPT ALL INPUT VALUES?

YES

INPUT DATA COMPLETE


   0
@  0
IDLE
```

phase of the program was that value taken at a temperature of 3°C, at a pressure of 6895 KPa, and at a frequency of 50 hertz for the particular hydrophone being used. This value, as can be seen from the table, does not compensate fully for the effects of actual temperature and pressure of the hydrophone at a specific depth and for the frequency response through the third octave filters.

The actual hydrophone sensitivity value, N_j, required by the acoustic equation can be expressed as:

$$N_j = S_h + \Delta_j + K_j \qquad (5\ 6.3.2\text{-}1)$$

where j = third octave band number

S_h = hydrophone sensitivity obtained from the table

Δ_j = the correction applied to account for the frequency response of a given hydrophone within the dynamic range for band j

K_j = correction factor applied to compensate for actual temperature and pressure of a hydrophone at a given depth and at the center frequency of the third octave band.

The acoustic equation accounts for the parameters S_h and Δ_j which are entered in the program during initialization. However, the "K" factor, K_j, is introduced as a correction during the editing phase of the third octave analysis process rather than during initialization. This was done to expedite third octave processing because of the computations involved.

5.6.4 TEST Mode

The TEST mode is used to check system operation prior to entering the data acquisition phase. The main difference between this and the ACQUISITION mode is that no output data records are written on the digital magnetic tape.

5.6.5 TERMINATION Mode

TERMINATION is used to complete the acquisition phase by terminating the digital magnetic tape records with a double end-of-file. Once a double end-of-file is written, the program backs over the last end-of-file in preparation for processing another hydrophone.

5.7 Command Keyboard Entries

The operator can at all times communicate with the program regardless of the program mode currently in execution. The operator interacts with the program by initiating keyboard commands via the teletype or CRT display unit. The commands allow the operator to change modes of operation. request information to be printed onto hard copy and dynamically change or read out specific memory locations. Program operation is not interrupted during this process since the entire conversation is accomplished in background. A list of keyboard commands is shown in table 13.

5.8 Program Error Diagnostics

The program prints out error diagnostics once every minute, 80 minutes in hydrophone time. These messages provide dynamic status with respect to the state of processing during acquisition. The messages inform the operator when unusual conditions exist such as time synchronization errors occurring, time and gain code errors detected, and plot limits exceeded. The messages take the form of a three or four character mnemonic to identify the exact error diagnostic. The format printed is:

TABLE 13

COMMAND KEYBOARD ENTRIES

Program ACDI - Ambient Noise Processing

Keyboard Command	Description
*D@X	Dump memory location at octal location X
*C@A,@A	Change memory location X to octal value A
IN	Start initialization
AQ	Start acquisition
EN	Terminate deployment
AB	Abort deployment
TE	Start test mode
ID	Start idle
TS	Resynchronize 24 hour clock to time code
RD	Raw data printout - TE mode
CD	Corrected data printout - TE mode
BN	Select third octave band for printout
CG	Print out current value of hydrophone gain
SD	Stop test data printout
SY	Re-synch days, hours, and minutes to time code
TC	Compare computer time with time code reading
CA	Start calibration (special test)
DC	Dump current 15 bands of corrected data
DU	Dump current 15 bands of uncorrected data
RC	Change range of brush plot
SB	Start brush plotting
SP	Stop brush plotting
TT	Dump calibration data
IC	Print integration count

1220

3

STC 2

ERBD 5

meaning that at relative time 1220, day 3, two types of errors were detected: two gain code errors (STC) and five hydrophone amplifier overloads (ERBD). These errors were detected within the time period of 80 minutes since the last error message printout. Table 14 shows a list of error messages currently being used. If no errors occurred during the 80 minute hydrophone period, only the time will be printed.

5.9 Analog Plots of Third Octave Bands

Figure 13 shows a sample Brush analog plot of ambient noise data. The analog plot contains 8 channels of data continuously recorded for the entire period of the hydrophone through the third octave system. The analog channels contain the following information:

Channels 1-4: any four out of 15 bands selected for plotting. The average spectrum levels, in 10 second averages, are in microbars. Generally, the selected third octave bands are:

Channel 1: 50 Hz

Channel 2: 100 Hz

Channel 3: 75 Hz

Channel 4: 200 Hz

Channel 5: is the computer output gain state level of the hydrophone being processed. Range in dc level represents data amplifier gains of 10, 20, 30, or 40 db.

Channel 6: Hydrophone gain as read directly from the time code reader. This redundancy has been useful to detect

TABLE 14

ERROR MESSAGE SUMMARY FOR PROGRAM ACDI

Error Mnemonic	Description
MINI	A minute interrupt was not detected after 5 integrations
IRGD	Day code error
IRGM	Minute code error
IRGH	Hour code error
OVSH	Integrations not in sync with minute time frame
ERBD	Hydrophone overload detected
I O	Input exceeding output
STC	Gain code error
RSYC	Synchronization error
UBX	Brush channel X upper limit exceeded where X = Brush channel 1 thru 4
LBX	Brush channel X lower limit exceeded where X = Brush channel 1 thru 4

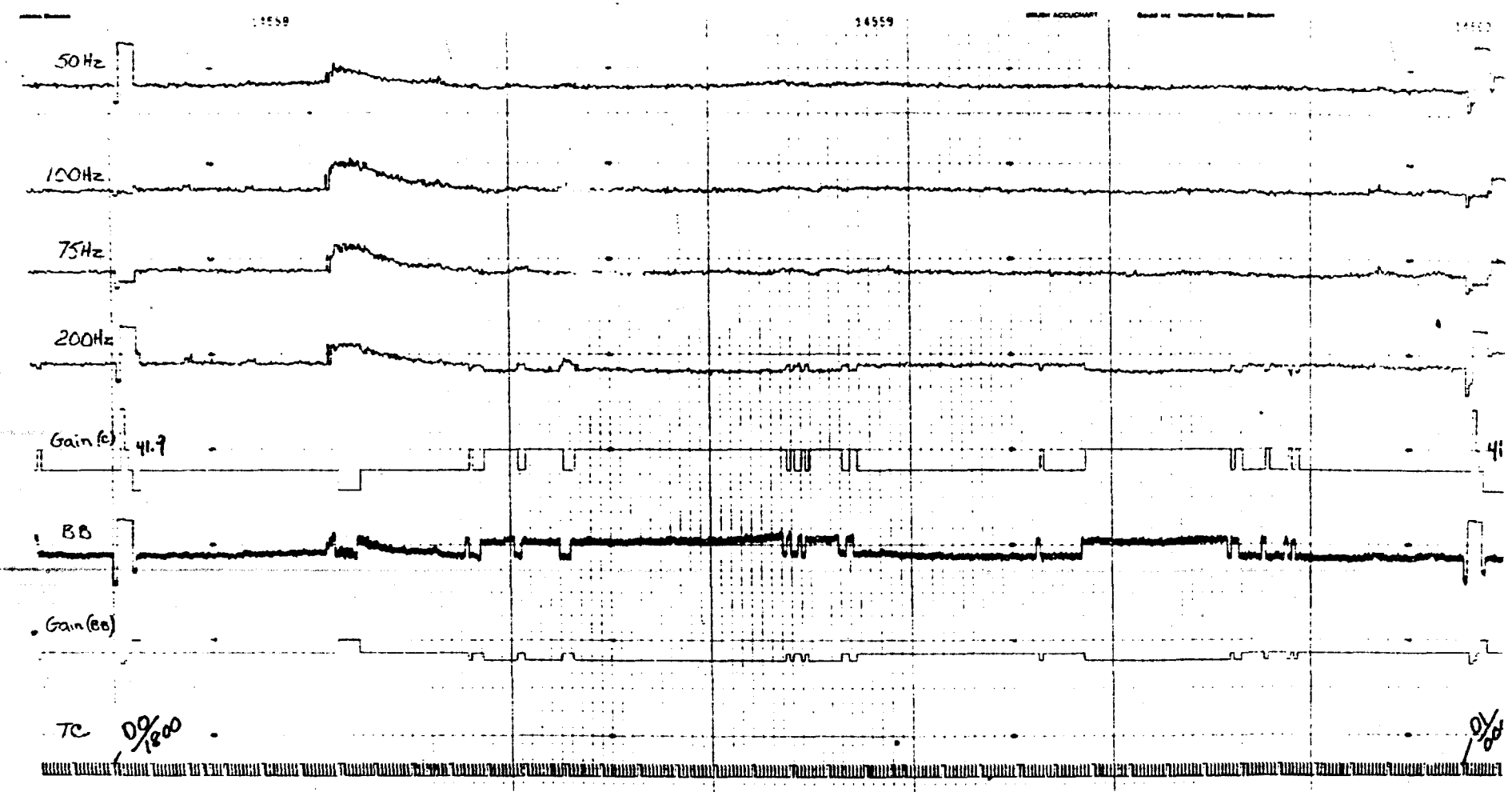

Figure 13. Sample Ambient Noise Brush Analog Plot Output

Best Available Copy

incorrect gain state decoding via the computer processing. If channels 5 and 6 do not agree, problems exist either in the computer processing program or system hardware.

Channel 7: The uncorrected signal from the processing hydrophone, through a 50Hz third octave filter, is plotted directly on the Brush plotter (not through computer). Channel 7 is used to check validity of data being processed through the computer. ual checks are made between the uncorrected 50 Hz signal level of channel 7 with the corrected 50 Hz signal level being recorded in one of the first 4 channels from the computer. In order to compare the levels of the two 50 Hz signals, a process can be used to correct the uncorrected 50 Hz signals of channel 7 by comparing it with the signal level of channel 1. If discrepancies occur, then the third octave process should be discontinued until the problem is resolved. Incorrect parameters inserted in the computer program during initialization are indicative of discrepancies between these two channels.

Channel 8: This channel is used to provide a suitable time base when analyzing the Brush plots. An IRIG-D time code is used from the time code reader which represents a one-hour repetition rate. Each DC level excursion represents one minute of hydrophone time, and the code frame repeats every hour.

Referring back to the initialization printout, table 12, the program asks the operator to input scale factors for each of five channels to be used for plotting data on the Brush recorder. The program stores the lower limit of each band selected and automatically sets the upper range of the Brush plot 50 db higher than the lower limit. An example of bands to be plotted are as follows:

36, -40.

37, -40.

39, -40.

45, -40.

The above entry indicates that the operator wishes to plot third octave bands 36, 37, 39, and 45 all using -40 db as the lower plot limit.

Since the output to the Brush recorder through the digital-to-analog converter is a 10 volt dc level with full scale being represented in 256 bits, the scale factor applied would be:

$$SFAC = \frac{50 \text{ db (dynamic range)}}{256 \text{ bits}} = .2 \text{ db/bit} \qquad (5.9\text{-}1)$$

Then scaled data point XC_i, represented by a 10 second average spectrum level $(BJ)_j$ in db re: microbar/Hz, would be scaled as follows:

$$XC_i = \frac{(BJ)_j - LIM_1}{SFAC} \qquad (5.9\text{-}2)$$

where:

XC_i = the scaled data point to be plotted on channel i, where i = 1 to 4.

BJ_j = average spectrum level for band j, where j = 31 to 45.

LIM_1 = lower limit of a 50 db dynamic range of the Brush recorder.

SFAC = Brush recorder scale factor applied through a D-A output converter where 10 volts represents full scale.

The program has the ability to change the lower limit of any selected band in the event that an error message indicates that out of bound values are being recorded. This change is done dynamically while the program is in process of plotting data points.

5.9.1 Determining Validity of Ambient Noise Data Derived from Brush Recordings

The analog Brush recorder output generated from the third octave analysis program contains plots of selected third octave ambient noise data referenced to microbar levels. Eight brush channels are recorded: six channels plotted directly from the computer, one represents the gain of the hydrophone from the gain state decoder, one from the IRIG-D slow code (hour code) from the time code reader, and the eighth from the recorded broadband signal through a third octave 50 Hz filter to the brush recorder.

A selection of 1/3 octave bands for a particular hydrophone is shown below. This is typical output plot sequence on a Brush recorder of the ambient noise data from an ACODAC deployment.

Brush Channel	Signal	Origination	Band Number (80:1)
1	50 Hz	computer	36
2	100 Hz	computer	39
3	75 Hz	computer	37
4	200 Hz	computer	42
5	Hydro gain	computer	
6	Gain	gain state decoder	
7	50 Hz	broadband through 50 Hz filter	
8	time code	IRIG-D slow code	

Note that two amplifier gain state channels are displayed. This redundancy has been used as a cross-check on the hydrophone amplifier gain setting on playback to insure that the computer program is detecting the gain states properly with respect to the gain state being decoded from the time code envelope.

One purpose of the Brush recorder output data is to assist in determining the validity of data as the data is being digitized, integrated by 10 second averages, corrected to microbar levels, and written onto digital magnetic tape for further processing.

The following procedure should be used to verify that all system constants have been inserted during the initialization phase of program execution, and that all hardware connections, including proper hydrophone selections, have been made.

Calibration Phase

Figure 14 represents a Brush recording of a typical calibration sequence which was recorded during the deployment phase of ACODAC once every six hours. During the calibration phase, a 50 Hz and 200 Hz signal is injected at the input to the hydrophone data amplifier with the hydrophone input disconnected. Four levels are generated for each signal in the capsule, each lasting one minute. These levels are: -41, -31, -21, -11 db. The levels are selected to force the amplifier gain states to switch to the four dynamic ranges of the amplifier, thus allowing a test of the amplifier gain ranges while at the same time providing a calibration level for ambient noise analysis.

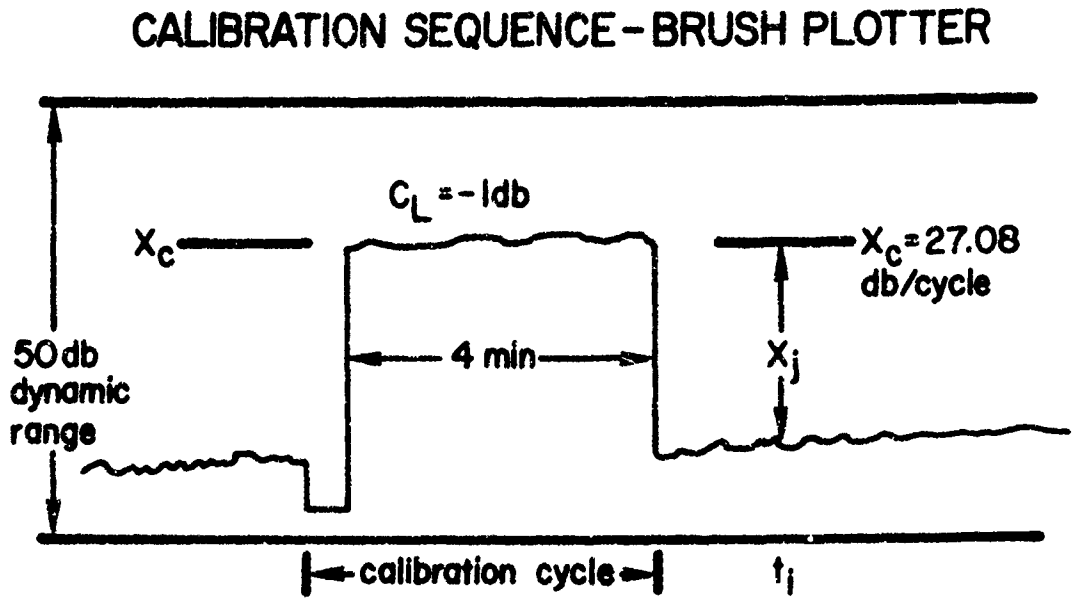

FIGURE 14

The four calibration levels with the corresponding gain ranges are shown below.

Signal level (db)	Gain State (db)
-41	40
-31	30
-21	20
-11	10

Referring to figure 14, observe the signal through a 50 Hz third octave filter. If the system is behaving normally, the resultant level that will be recorded on the Brush recorder should represent a relative level of (-1 db) recorded for the four minute period. The procedure requires converting this raw 50 Hz signal to a sound pressure level re: 1 microbar/Hz, and then to compare this level with the output of the 50 Hz third octave signal being plotted from the computer re: 1 microbar/Hz. If the ambient noise levels of the two signals agree, within 1 or 2 db, then it can be

assumed that the computer process is normal and that all initialization constants and hardware interconnections have been made properly.

To Convert the Raw 50 Hz Signal to a Sound Pressure Level Re:MBar/Hz

1. Observe the calibration level for the four minute period. The level should be smooth during this time. If uneven levels appear for the 4 minute period, it may be difficult to pick the correct level, since the uneveness was probably caused by the amplifier not switching to the proper gain state when the signal level was switched. However, if the correct level can be observed, then this level represents -1 db re: 1 volt.

2. To convert the calibration level to microbars/Hz, subtract the hydrophone sensitivity (S_h) from this level (C_L): $C_L - S_h$. This is the equivalence of generating an RMS sound pressure level of one microbar equal to 1 dyne per square centimeter. In this example, the hydrophone sensitivity is -38.7 db/mbar. The converted level then becomes:

$$-1 - (-38.7) = 37.7 \text{ db}$$

3. Since the broad band signal was passed through a 50 Hz third octave filter, the signal must be corrected for bandwidth. The bandwidth correction for the 50 Hz signal is 10.62 db. The reference level then becomes:

$$37.7 - 10.62 = 27.08 \text{ db}$$

If X_j represents the ambient noise level at time t_j after the calibration cycle has been completed, then the true ambient noise level re: mbar/cycle is:

$$27.08 - X_j$$

The level X_c therefore can be used for the next six hour interval to determine the ambinet noise level at any time t.

This 50 Hz level can then be used to compare as a reference the 50 Hz signal obtained through the computer process. If the two levels do not agree within one or two db, then it is assumed that certain initialization parameters have not been inserted properly in the computer program or that instrumentation malfunctions may exist.

6. ANALYSIS OF CONTINUOUS WAVE SIGNALS USING THIRD OCTAVE FILTERS AND 1 HZ NOTCHED FILTERS TO OBTAIN TRANSMISSION LOSS DATA

6.1 Input Data

The continuous wave (CW) or narrow band analysis is similar to the third octave ambient noise analysis with the following exceptions:

(1) An array of six 1 Hz wide combed filters were added to bandpass source frequencies of 20 and 130 Hz. (These frequencies were from a 1972 field operation; other frequencies are possible with appropriate filters). A patch panel was used to arrange the desired signals into 15 bands which were then passed through the General Radio 1926 RMS Detector. From then on, the process was similar in nature to the third octave system. Figure 15 shows the hardware interconnections of the analysis setup. For certain applications, filters of less than one hertz bandwidth may be used.

(2) The patch panel was used to connect the combed filter and third octave filter outputs to selected band inputs to the General Radio Real Time Analyzer Although in practice, bands 31 to 45 represent the true third octave bands of the frequency inputs, in the narrow band system, bands 31 to 45 have no meaning to the band frequency. The connections through the patch panel must be known to ascertain which band is associated with a particular frequency.

TRANSMISSION LOSS COMPUTATIONS FOR 130 HZ TOWED SOURCE

TABLE 15

```
                NUMBER OF CHANNELS= 15      NUMBER OF BEGINNING CHANNEL=  1
* INPUT *     5     8    12
* INPUT *     3    199999     0  237     9    45    099999     0     0
* INPUT *     0     3     8     0     3    22     0     0     0     1

SHIP NAME =72-2
CRUISE NO. =
HYDROPHONE NO. =CC10 MODE TYPE =1A2  DEPLOY NO. =
HYDROPHONE SER. NO. =CC
HYDROPHONE DEPTH =
HYDROPHONE CALIBRATION =     -38.20
MINIMUM BAND =          31
MAXIMUM BAND =          45
OBS. ON TIME =           7
OBS. DUTY CYCLE =       1.00
PRE-CAL XFER FUNC =      42.50


INDX1 = 8
INDX2 = 12
IGX = 1
A = .217954
B = 1.484414E-02
P130S = .208440
P125A = 1.160663E-02
IGX = 3
X130S = -6.81018
X125A = -19.3529
N125 = -17.2482
TLOSS = 52.8102
   3  801  2  -8.23  -7.56  -7.06  -6.28  -6.21  -7.24  -6.36  -6.62  -6.77  -7.61  -8.84 -17.25 -25.81 -12.71  17.27
INDX1 = 8
INDX2 = 12
IGX = 1
A = .183217
B = 1.925751E-02
P130S = .172337
P125A = 1.327359E-02
IGX = 3
X130S = -7.63621
X125A = -18.7701
N125 = -17.1540
TLOSS = 83.6362
   3  803  2  -7.73  -8.27  -7.66  -6.39  -6.23  -7.36  -7.07  -7.37  -7.80  -8.32  -8.59 -17.15 -25.97 -12.16  17.60
INDX1 = 8
INDX2 = 12
IGX = 1
A = .169417
B = 1.516978E-02
P130S = .155[illegible]
P125A = 1.264722E-02
```

6.2 Calibrating the Narrow Band System

The transfer function, T'_{50}, used in equation 4.1-1 represents the transfer function of the third octave analysis without the narrow band filters connected. The true system transfer function of the narrow band system was obtained by injecting a known signal level into the system of figure 15 at the center frequency of the 20 and 130 hertz filters. The correction to the overall transfer function was made in the correction equation, 4.2-4, by using the BWC array since the bandwidth correction for narrow band filters was not used. Figure 16 shows a more detailed flow of filters used for the 130 hertz analysis.

6.3 Computing Transmission Loss

Once the cw energy is digitized through the GR Analyzer, corrected to microbar levels and recorded on digital tape, the digital tape is submitted for the editing process to eliminate spurious signals. During this process, a transmission loss table is generated for the cw source frequency selected. Table 15 shows a typical set of transmission loss values computed for the 130 Hz source.

6.3.1 System Equations

Consider a set of simultaneous equations which are used to define a cw source system through narrow band and third octave filters. The average power of the total energy received and recorded during the time the cw source is transmitted is:

Narrow band filter system:

The total average power, A, obtained through the narrow band system is:

$$P130S + \frac{PA}{g(BW)} = A \qquad (6.3\text{-}1)$$

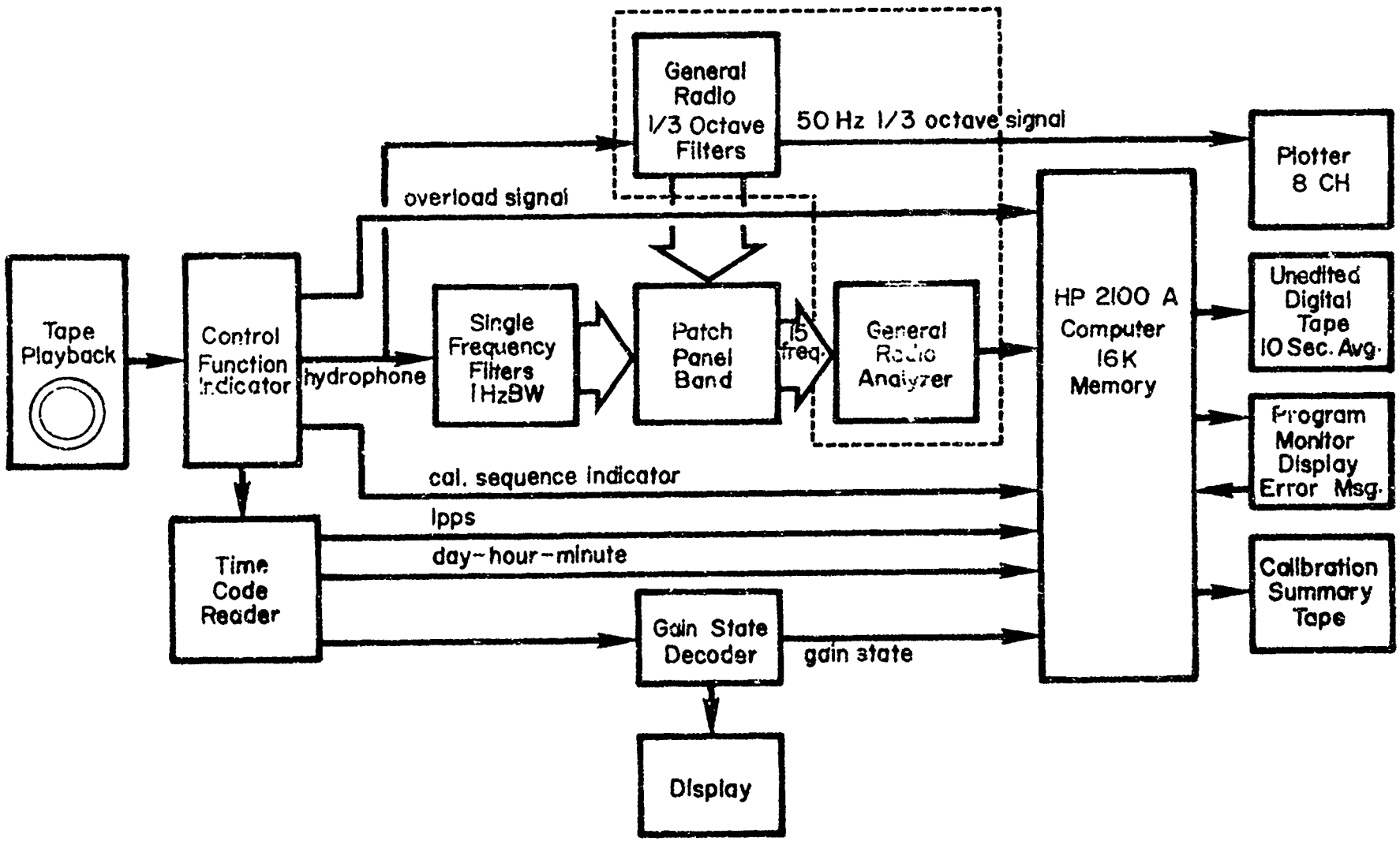

Figure 15. Acodac System Diagram for CW Analysis

WHOI '73
DWG EAS

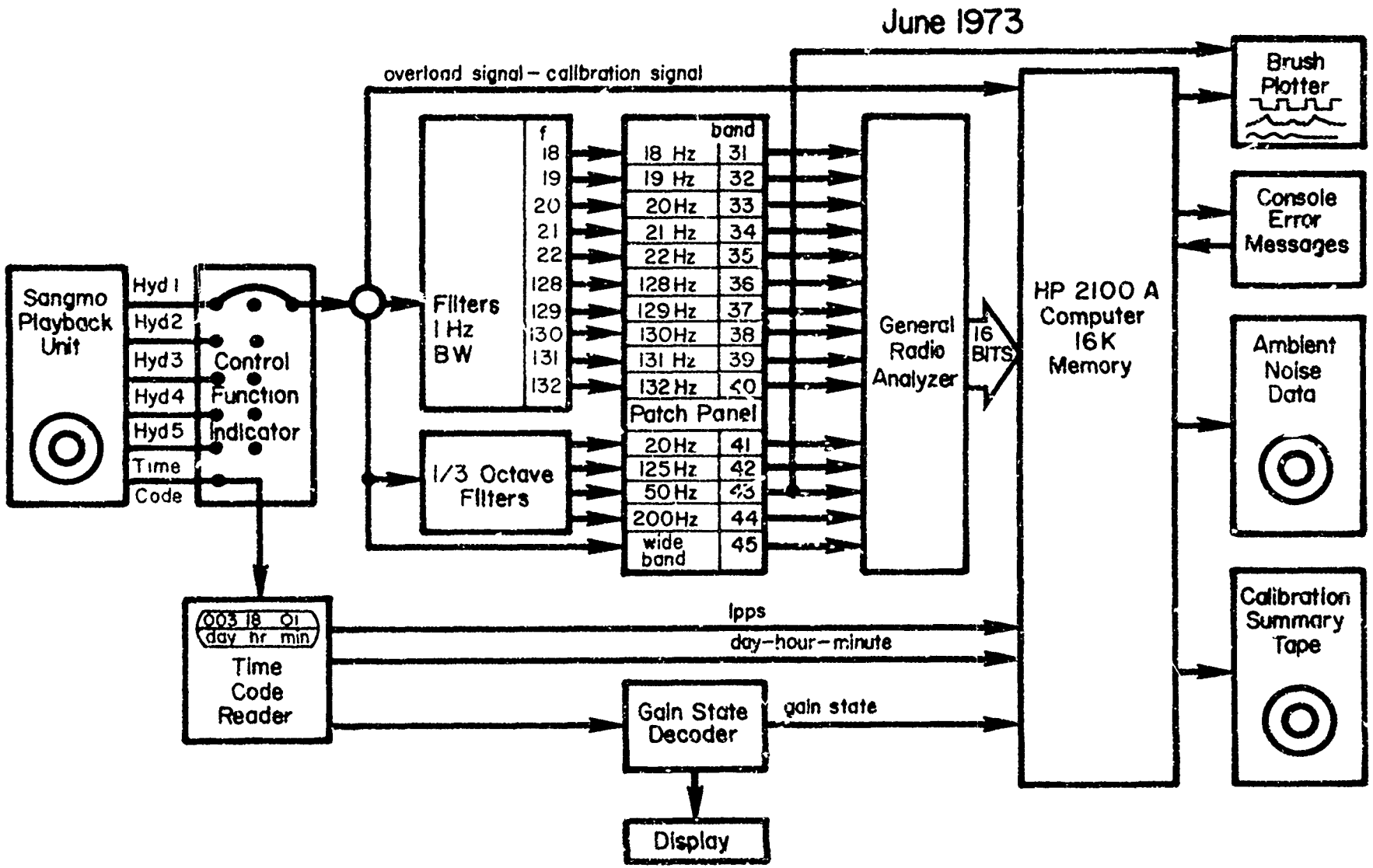

Figure 16. Acodac Continuous Wave Analysis

where P130S = average power of 130 Hz source through 1 Hz wide narrow band filter system

PA = average power of ambient noise energy through narrow band filter system

g = weighting factor to compensate for the difference in the average power between the center frequency of the third octave band (125 Hz) and the signal source (130 Hz); g = 1.22

Third Octave filter system

The total average power, B, obtained through the third octave 125 Hz band is:

$$\frac{P130S}{BW} + \frac{PA}{BW} = B \qquad (6.3\text{-}2)$$

where P130S = Average power of 130 Hz energy through third octave filter system

PA = Average power of ambient noise energy through third octave filter system at a center frequency of 125 Hz.

BW = Bandwidth of 125 Hz filter; BW = 28.8 db.

Using the simultaneous equation we solve for the ambient noise energy, PA:

$$P130S + \frac{PA}{g(BW)} = A \qquad (6.3\text{-}3)$$

$$P130S + PA = (BW)B \qquad (6.3\text{-}4)$$

solving for PA

$$PA = \frac{[A-(BW)]g(BW)}{1-g(BW)} \qquad (6.3\text{-}5)$$

The average power, PA, computed for ambient noise energy in equation 6.3-5 must be corrected for the effective bandwidth for the actual filter in order to obtain the power-per-hertz value of ambient noise.

$$\frac{PA}{BW} = \frac{g[A-(BW)B]}{1-g(BW)} \tag{6.3-6}$$

Re-arranging the terms yields:

$$\frac{PA}{BW} = \frac{g[(BW)B-A]}{g(BW)-1} \tag{6.3-7}$$

Computing Narrow Band Source Energy

Returning to the two equations 6.3-1 and 6.3-2, we solve for the 130 Hz source energy:

$$P130S = \frac{BW(gA-B)}{g(BW)-1} \tag{6.3-8}$$

Equation 6.3-7 and 6.3-8 can now be used to obtain the equivalent of source plus ambient noise from the total power received during the period when the source is transmitting.

Substitutions are made in equation 6.3-8 to obtain the power received through the 129 Hz narrow band filter since the results showed that the peak source energy varied between the 129 and 130 Hz frequency bands.

Figure 17 shows a typical Brush plot of narrow band spectra of the 130 Hz recorded by hydrophone no. 3. Channels 1 and 2 are outputs from the narrow band filters while channels 3 and 4 represent outputs of the wide band signal through the GR 1925 Multifilter.

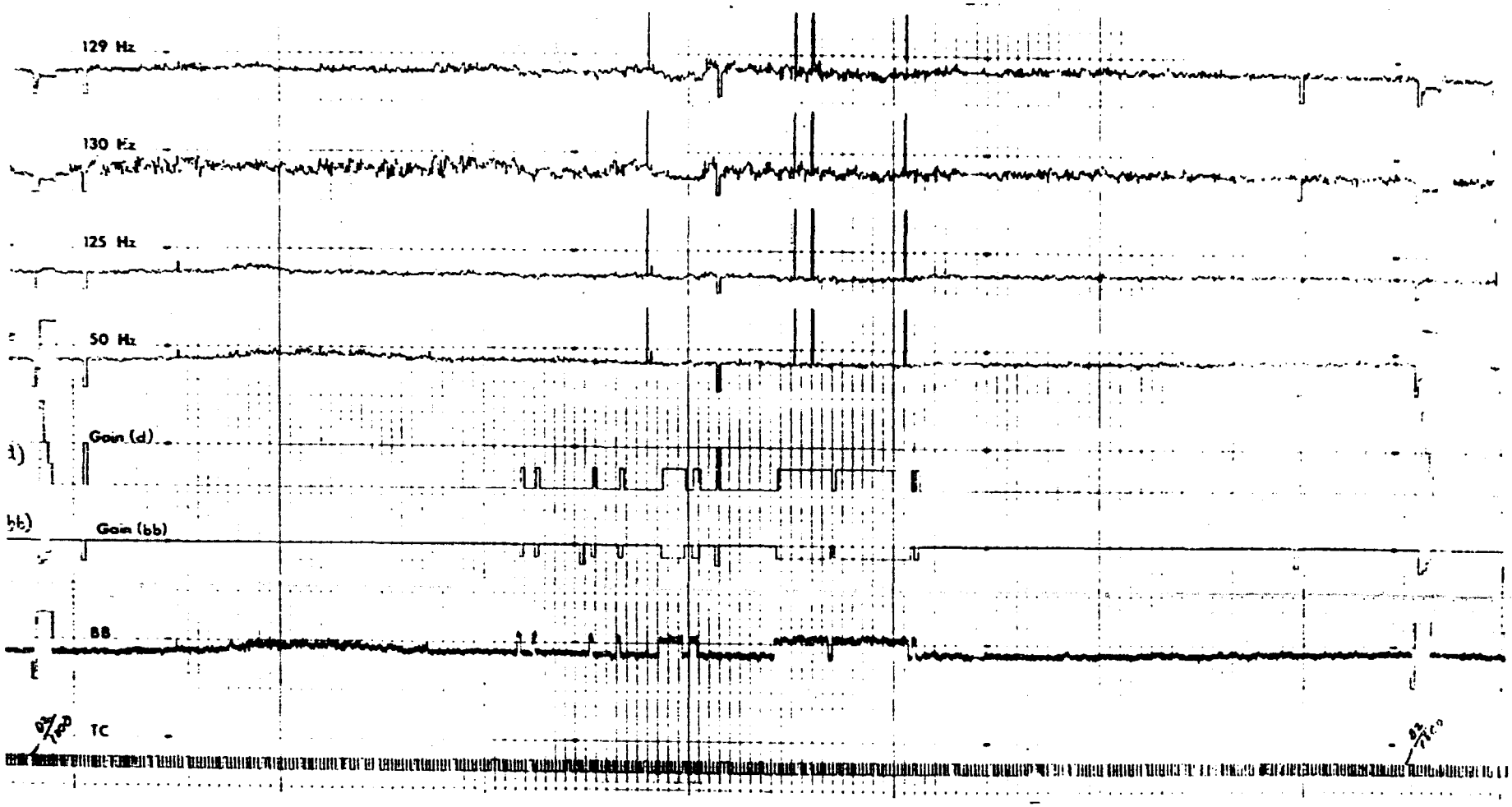

Figure 17. Sample Printout for Continuous Wave Analysis Using Narrow Band Filters

Best Available Copy

Channels 1 through 4 represent the ambient noise plus cw energy processed through the computer and corrected to db re: microbar/Hz. Channel 5 is a plot of the gain of the hydrophone as detected via the computer, and channel 6 is the same gain levels plotted from the output of the gain state decoder and wired directly to the Brush plotter. Channel 7 represents the uncorrected wide band signal through a separate 50 Hz third octave filter connected directly to the Brush plotter. Channel 8 is a plot of the IRIG-D slow code used as a time reference track.

7. EDITING PROCESS FOR THIRD OCTAVE AMBIENT NOISE TAPES

7.1 Purpose

The editing process for ambient noise data is required to eliminate all spurious signals such as shots, instrument injected noise, and improper corrections made in gain ranging. Figure 18 shows a flow diagram of the editing process using the Sigma 7 as the processing computer. The unedited ambient noise tape, from the HP third octave analysis system, is mounted as an input tape to the system. The editing program provides various processing options which are selectable at run time by input cards to the program.

7.2 Editing Options

Editing options are provided as card inputs to the program. These options are:

Time Window Selection

An option is allowed to select any time window for editing. Either a series of time windows can be used, or the entire tape can be selected for editing.

June 1973

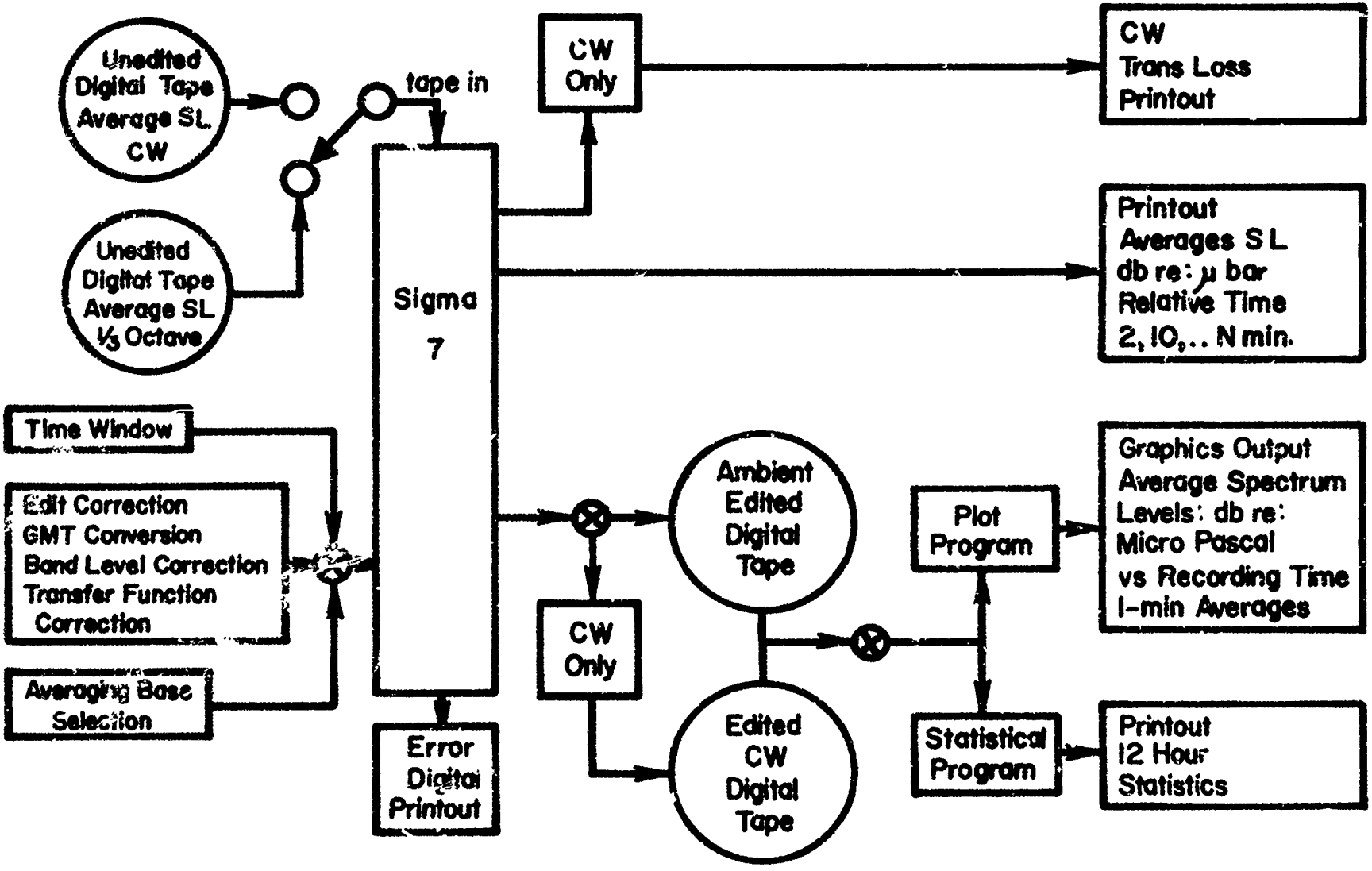

Figure 18. Flow Diagram of Ambient Noise Editing Process

WHOI '73
DWG EAS

Band Level Correction

Corrections can be made to any or all third octave bands. Corrections are made in db and are applied as algebraic sums. The "k" factors discussed in paragraph 5.6.3 2 are typical of the corrections applied to individual bands in this category

Transfer Function Corrections

This option allows for a transfer function correction of any six hour period. If selected, the editing program will pick up the new transfer function from the data header record (word 5 and 6 of table 7) and apply the correction to the ambient noise spectrum levels for each 10 second average and for each band. The correction applied is actually the difference between the new transfer function and the one used during the processing.

7.3 Non-Optional Editing

In addition to the selectable options, the editing program will eliminate all calibration data records from the editing tape and reject all 10 second integration intervals that have been tagged with a 99.9.

7.4 Data Validity Test Criteria

Several tests are made to validate the data. Tests are applied to individual bands to check for spikes in data which may be induced by instrumentation. Checks are also made to detect shot arrivals and erroneous gain ranging.

7.4.1 Band Level Test

Each band is checked to see if it exceeds a certain ratio of the wide band signal. The ratio is set at run time and should be a number between .5 and .85 of the wide band signal. The default value is .5. Since we are dealing with ambient noise levels rather than pure cw, it can be assumed that the third octave energy levels are distributed throughout the 15 bands

with peak levels occurring at approximately 50 Hz and dropping off at the higher and lower frequencies. It should be remembered that the band level test is used to eliminate spurious signals caused by instrument electronics and the like. Further tests are employed to check for shot energy returns and improper gain ranging.

7.4.2 Erroneous Gain Level Shifting and Shot Energy Detection

A test is made to determine whether the data has undergone a shot arrival transition or an erroneous gain level shift. Since the purpose of the program is to eliminate all but pure ambient noise levels, these phenomena are edited out of the data.

An erroneous gain level shift is defined as the condition existing when the third octave processing program introduces a 10 db gain step in the average spectrum levels for each of 15 bands during the process of converting raw ambient noise to microbar levels. This condition occurs when the program gets out of synchronization with the IRIG-C time code frame thus causing a step function to appear in the data. More precisely, a gain adjustment is being applied to data in the wrong minute time frame.

The editing program first forms the difference between the sum of the first ten bands of the ith and ith + 1 10 second interval. The sum, S, of the ith interval is:

$$S_i = \sum_{j=1}^{10} (B_i)_j \qquad (7.4\text{-}1)$$

where B_i = the average spectrum level of the ith 10 second integration interval in db.

j = the third octave band number representing the frequency range of 15 to 125 Hz.

The sum of the ith + 1 interval is:

$$S_{i+1} = \sum_{j=1}^{10} (B_i+1)_j \tag{7.4-2}$$

The difference is then

$$\Delta S = S_{i+1} - S_i \tag{7.4-3}$$

This difference is then tested to see if it exceeds a level of 26 db.

It can be assumed that for prediction purposes, average representative ambient noise spectra will not usually exceed 26 db level shifts in short time intervals with respect to frequency ranges of 10 to 300 Hz, and the test appears to be a valid threshold, although selected rather heuristically, when attempting to separate ambient noise from shot arrivals.

Nevertheless, from the data processing results obtained, the 26 db threshold appears to work in isolating ambient noise from shot arrivals. Since most of the shot energy appears in the frequency range of 50 to 100 Hz, the sum of the first ten third octave frequency bands, between 15 and 125 Hz, were selected as the frequency ensemble

Now, if the difference of the sums represented by ΔS exceeds the 26 db level, further tests are made to isolate between a true shot arrival and an erroneous gain level shift. This isolation can readily be accomplished by testing ΔS to see

if it exceeds 90 db. Recall that an erroneous gain level shift will introduce a 10 db spectrum level error in each band. If the absolute value of the difference between the ith and the ith + 1 spectrum level intervals exceed 90 db, then the ith + 1 interval contains an erroneous gain level shift, or

$$\Delta S = \sum_{j=1}^{10} (10\ B_{i+1})_j - \sum_{j=1}^{10} (B_i)_j \qquad (7.4\text{-}4)$$

and

$$\Delta S > 90 \text{ db} \qquad (7.4\text{-}5)$$

If the 10 second interval contains a shot arrival, then

$$26 < \Delta S < 90 \text{ db} \qquad (7.4\text{-}6)$$

If any of the five 10 second intervals fails to pass the data validity test, the minute interval is rejected from further processing and is omitted from the edited tape being generated and from the computation of the mean.

7.5 Data Averaging

A maximum of 15 data means can be computed while undergoing the editing process. These means are obtained by converting the 10 second average spectrum levels to power, forming the sum and then converting back to decibels. These means are printed on the high speed printer for all 15 bands along with the time of day and the mean time base, i.e., 2 minute, 10 minute, 60 minute means, etc.

7.6 Error Summary Printout

A hardcopy printout is provided showing a summary of all shot intervals and erroneous gain level shifts encountered during the editing process. See figure 19 for sample printout. This summary is helpful in listing the minute intervals omitted during the editing process and provides an accurate record of where the shot sequences were detected during the deployment phase.

```
C 1639 1C *12*69 *14*86 *16*5C *14*07 *15*23 *15*34 *14*75 *18*28 *21*65 *24*79 *29*35 *32*60 *36*03 *34*86  *8*45

C 1649 1C *13*25 *15*41 *17*34 *15*73 [illegible] *14*9C *18*24 *21*40 *24*56 *29*24 *32*45 *36*05 *34*71  *6*97

C 1659 1C *12*5C *14*81 *17*27 *15*57 [illegible] *18*00 *21*09 *24*50 *29*09 *32*19 *35*37 *34*71  *6*24

C 1669 1C *12*31 *15*38 *17*36 *16*14 *16*44 *15*44 *14*88 *18*32 *21*69 *24*51 *29*14 *32*49 *35*30 *34*57  *6*86

C 1719 1C *11*77 *15*27 *17*73 *16*18 *16*31 *16*15 *14*9C *18*74 *22*25 *24*83 *29*44 *32*67 *35*40 *34*70  *6*08

C 1729 1C *12*41 *15*22 *17*74 *15*94 [illegible] *16*23 *14*75 *18*79 *22*16 *24*67 *29*22 *32*52 *35*43 *34*55  *7*77

C 1739 1C *13*C1 *16*25 *18*26 *16*87 [illegible] *16*15 *14*32 *18*37 *22*01 *24*51 *28*98 *32*28 *35*36 *34*35  *8*67

C 1749 1C *13*36 *15*74 *18*02 *16*86 [illegible] *16*15 *14*62 *18*58 *21*96 *24*71 *29*12 *32*36 *35*28 *34*12  *9*15

C 1759 1C *14*18 [illegible] *17*78 [illegible] *18*86 *15*75 *21*90 *24*71 *28*97 *32*20 *35*24 *34*34  *9*76
*** REC  96 TIME GAP GT 2 MINS    0  18   5    0  18   3

C 1815 1C *14*14 *15*56 *17*33 *16*53 *16*44 *16*15 *14*23 *17*77 *20*82 *22*88 *27*47 *30*36 *33*54 *31*54 *10*06

          DELTA  [illegible]  0  18  19
  SHOT OCCURS AT APPROX    C  18  [illegible]

C 1827 1C *13*45 [illegible] *21*29 *24*50 *29*08 *31*75 *34*60 *33*30 [illegible]

          DELTA  34*25    0  18  35
*** REC  101 WRNG: DATA MISSING DURING SHOT/GAIN DECISION    0  18  35
          DELTA  37*75    C  18  36
  SHOT OCCURS AT APPROX    C  18  [illegible]

C 1840 1C [illegible] *18*24 *21*94 [illegible] *32*19 *36*12 *33*86 *11*50

C 1850 1C *14*84 *16*94 *18*17 *16*31 *16*20 *16*43 *15*04 *18*34 *22*01 *25*82 *29*93 *33*11 *36*48 *34*57 *11*95

          DELTA  29*50    0  18  57
  SHOT OCCURS AT APPROX    C  18  [illegible]
          DELTA  57*00    0  18  59
  SHOT OCCURS AT APPROX    C  19   0 BIG*  [illegible]

C 1900 1C *14*42  *9*54 *14*80 *13*46  *3*47 *11*28  *5*82  *8*12  *9*99 *14*37 *20*28 *24*59 *27*15 *27*55 [illegible]

C 1910 1C *17*C4  *8*53 [illegible] *14*52 [illegible]  *8*74 *12*97 *18*47 *22*81 *25*85 *24*31  *3*36

C 1920 1C *17*43 *13*71 *18*44 *14*27  *9*21 *13*30 *11*20 *13*06 *14*64 *18*55 *23*53 *28*29 *31*18 *31*76  *8*64

C 1930 1C *17*3C *14*76 *18*22 *16*21 *11*08 *15*52 *13*39 *15*88 *14*02 *21*44 *26*77 *30*83 *33*84 *33*30 *10*35

          DELTA  *29*75    0  19  38
*** REC  110 WRNG: DATA MISSING DURING SHOT/GAIN DECISION    0  19  38

C 1945 1C *17*42 *16*76 *20*26 *19*42 *18*44 *18*37 *16*75 *18*69 *21*44 *24*25 *30*59 *34*56 *34*01 [illegible]

C 1955 1C *18*53 *16*35 *19*47 *19*52 [illegible] *17*57 *20*63 *25*42 *30*62 *35*03 *34*59 *37*33 [illegible]

          DELTA  *28*50    C  19  57
  SHOT OCCURS AT APPROX    C  19  58 BIG*  15*00
          DELTA  *52*CO    0  20   1
  SHOT OCCURS AT APPROX    C  20   2 BIG*  *9*75
          DELTA  27*50    0  20   3
  SHOT OCCURS AT APPROX    C  20   4 BIG*  [illegible]

C 2011 1C *13*84 *15*3C *16*77 *18*44 [illegible] *17*9C *19*39 *21*86 *24*67 *30*62 *34*90 *34*98 *38*05 [illegible]

C 2021 1C *19*34 *18*26 *20*01 *19*49 *18*74 [illegible] *17*92 *18*71 *21*32 *27*30 *31*40 *35*79 *37*70 *38*11 *14*69

C 2031 1C *18*87 [illegible] *19*46 [illegible] *18*37 *18*32 *17*82 *18*75 *21*88 *27*33 *31*65 *35*96 *38*08 *38*55 *14*67

C 2041 1C *17*72 *18*31 *19*14 *18*94 [illegible] *17*58 *18*65 *21*92 *27*34 *31*74 *34*04 *38*30 *39*34 *14*33

          DELTA *102*50    0  20  43
  GAIN CHANGE AT APPROX    C  20  44 BIG*  104*75
          DELTA *103*00    0  20  47
  GAIN CHANGE AT APPROX    C  20  48 BIG*  100*50
          DELTA *104*75    0  20  51
  GAIN CHANGE AT APPROX    0  20  52 BIG*  105*75
          DELTA  *95*00    0  20  55
*** REC  121 WRNG: DATA MISSING DURING SHOT/GAIN DECISION    0  20  55

C 2054 1C *17*45 *17*29 *19*12 *18*27 *15*16 *16*65 *16*54 *18*67 *21*18 *24*78 *31*36 *35*78 *34*21 [illegible] *13*34

          DELTA *104*75    0  20  59
  GAIN CHANGE AT APPROX    C  21   0 BIG*  105*50
          DELTA *191*00    0  21   3
  GAIN CHANGE AT APPROX    C  21   4 BIG*  197*50
          DELTA *101*75    C  21   7
  GAIN CHANGE AT APPROX    C  21   8 BIG*  102*50
*** REC  123 TIME GAP GT 2 MINS    0  21  26    C  21  13
```

Reproduced from best available copy.

Figure 19. Error Summary Printout

7.7 Processing from the Edited Tape

Once the edited or clean tape is produced, further processing is required to obtain meaningful statistical data and plots of the average spectrum levels for the ambient noise. These data, in the form of 12 hour statistics, frequency histograms, and plots provide the final output stages of data processing presently available for ambient noise representation.

8. STATISTICAL SUMMARY

The program ACOSTAT is used to compute statistics on ambient noise data in the form of 10 second average spectrum levels. The program uses the 10 second interval as the data base, and all statistical functions are computed in decibels.

The statistics shown in figure 21 are standard moment statistics which can be found in any statistics text, e.g., Statistical and Experimental Design by N.L. Johnson and F.C. Leone. The chi-squared test (last two lines, figure 21) is a test for normalcy of the decibel distribution function. Figure 20 shows the hydrophone station identification for the statistics being computed.

Program ACOSTAT also has an option to output a digital plot of ambient noise spectrum levels for selected frequency bands vs time with each data point plotted representing a seven minute mean. This plot is not widely used and has been superseded by the one minute mean plot to be described below.

If selected, a frequency histogram, figure 22, of each third octave band is printed on the high speed printer giving the class intervals and population density of the distribution. See Appendix B for a program description of ACOSTAT.

9. ACODAC AMBIENT NOISE PLOT

This program is used to plot ambient noise data using the 10 second intervals as the data base and computing a one minute mean for each data point. All 10 second data points are converted to power, the mean is computed and then converted

STATION IDENTIFICATION

R/V NS 7
CRUISE NO. -3
MOORING 1A1
CEPL. NO. C12
HYDR. STAT C0C5
ANAL TAPE ID 283 -72
CONTINUOUS DUTY CYCLE
BAND NUMBERS 31 TO 45

Figure 20. Station Identification

STATISTICAL SUMMARY OF AMBIENT NOISE FOR SELECTED THIRD OCTAVE BANDS

STATISTICS (IN DB) OF SELECTED BANDS DAY 221 HOURS 0 TO 1200

BAND NO.	31	32	33	34	35	36	37	38
CENTER FREQ. (HZ)	15.74	19.81	24.94	31.40	39.52	49.76	62.62	78.88
NO. OF POINTS	315.	315.	315.	315.	315.	315.	315.	315.
MEAN	-8.773	-11.649	-10.462	-11.148	-9.722	-8.910	-10.948	-13.706
STD DEVIATION, T	2.169	2.503	1.471	1.218	1.104	1.069	1.112	1.106
S SQUARED	4.706	6.266	2.163	1.485	1.220	1.143	1.237	1.223
SKEWNESS	.412	.460	.285	.023	-.261	-.278	.170	-.280
KURTOSIS-3	.022	-.883	.553	.735	-.161	.141	.603	-.283
RANGE	11.250	11.250	9.000	8.750	5.500	5.750	7.000	5.500
MEAN ERROR	.122	.141	.083	.069	.062	.060	.063	.062
SKEWNESS ERROR	.138	.138	.138	.138	.138	.138	.138	.138
KURTOSIS ERROR	.276	.276	.276	.276	.276	.276	.276	.276
STUDENTS T FOR SKEWNESS	2.983	3.331	2.062	.167	1.894	2.014	1.223	2.031
STUDENTS T FOR KURTOSIS	.081	3.200	2.002	2.660	.585	.510	2.908	.808
95% CONFIDENCE LIMITS	-9.014	-11.927	-10.625	-11.283	-9.845	-9.028	-11.071	-13.829
	-8.532	-11.372	-10.299	-11.013	-9.600	-8.791	-10.824	-13.584
CHI SQUARED	11.296	72.070	3.451	7.446	6.027	2.238	4.138	5.411
DEGREES OF FREEDOM	7	9	4	3	3	3	3	3

Figure 21. Statistical Summary of Ambient Noise for Selected Third Octave Bands

FREQUENCY HISTOGRAM FOR A THIRD OCTAVE BAND

BAND NO. 32 FREQ. 19.81 HZ

CLASS MIDPOINT	POPUL.	% OF TOTAL
-16.50	2	I
-15.50	12	IIII
-14.50	47	IIIIIIIIIIIIIII
-13.50	63	IIIIIIIIIIIIIIIII
-12.50	53	IIIIIIIIIIIIIIII
-11.50	41	IIIIIIIIIIIII
-10.50	20	IIIIII
-9.50	19	IIIIII
-8.50	31	IIIIIIIII
-7.50	26	IIIIIIII
-6.50	10	III
-5.50	1	

Figure 22. Frequency Histogram for a Third Octave Band

back to decibels for plotting. Figure 23 shows a representative plot of three frequency bands plotted against time. The data points are converted from microbars to micropascals for plotting. The number of points plotted is shown for each band along with a histogram of the distribution.

10. PROGRAM SPECIFICATIONS FOR THE NARROW BAND ANALYSIS PROGRAM (SIGMA 7) (ANALOG-TO-DIGITAL CONVERSION PROGRAM)

10.1 Program Specifications

This program has the ability to input raw ambient noise data from a Sangamo 7-channel recorder/play-back unit. Each hydrophone channel (6 total) are connected directly to analog input channels of the MD-51 digitizer in sequential order.

The program automatically starts and stops the digitizing process under computer control. The start time is determined by decoding time information from the Time Code reader in days, hours, minutes. The time code reader is interfaced to the computer via the A/D controller unit. The program starts by sending the appropriate control word out to the A/D controller to start the time reading process. A series of punched cards are an input to the computer which have the start times and the duration of each digitizing cycle. Once coincidence with the start time is made, the program starts the digitizing cycle for the duration designated on the card. This process continues until the entire tape has been digitized or until specified series of cycles has been accomplished. Figure 24 shows the hardware interconnections to the Sigma 7 via the high speed multiplexer digitizer.

An initialization parameter is used to provide the program with the program with the duty cycle being used on the ACODAC tape. Two duty cycles are expected: 50% (7 minutes on and 7 minutes off) and 100% continuous.

SHIP: 4TH SEAL CRUISE: 72-3 LOCATION: CAREX SYSTEM 2A4

DEPLOYMENT: #19 HYDROPHONE: #5 DEPTH: 4715 METERS 4/26/73 XDCR

AMBIENT NOISE PLOT-SELECTED THIRD OCTAVE BANDS

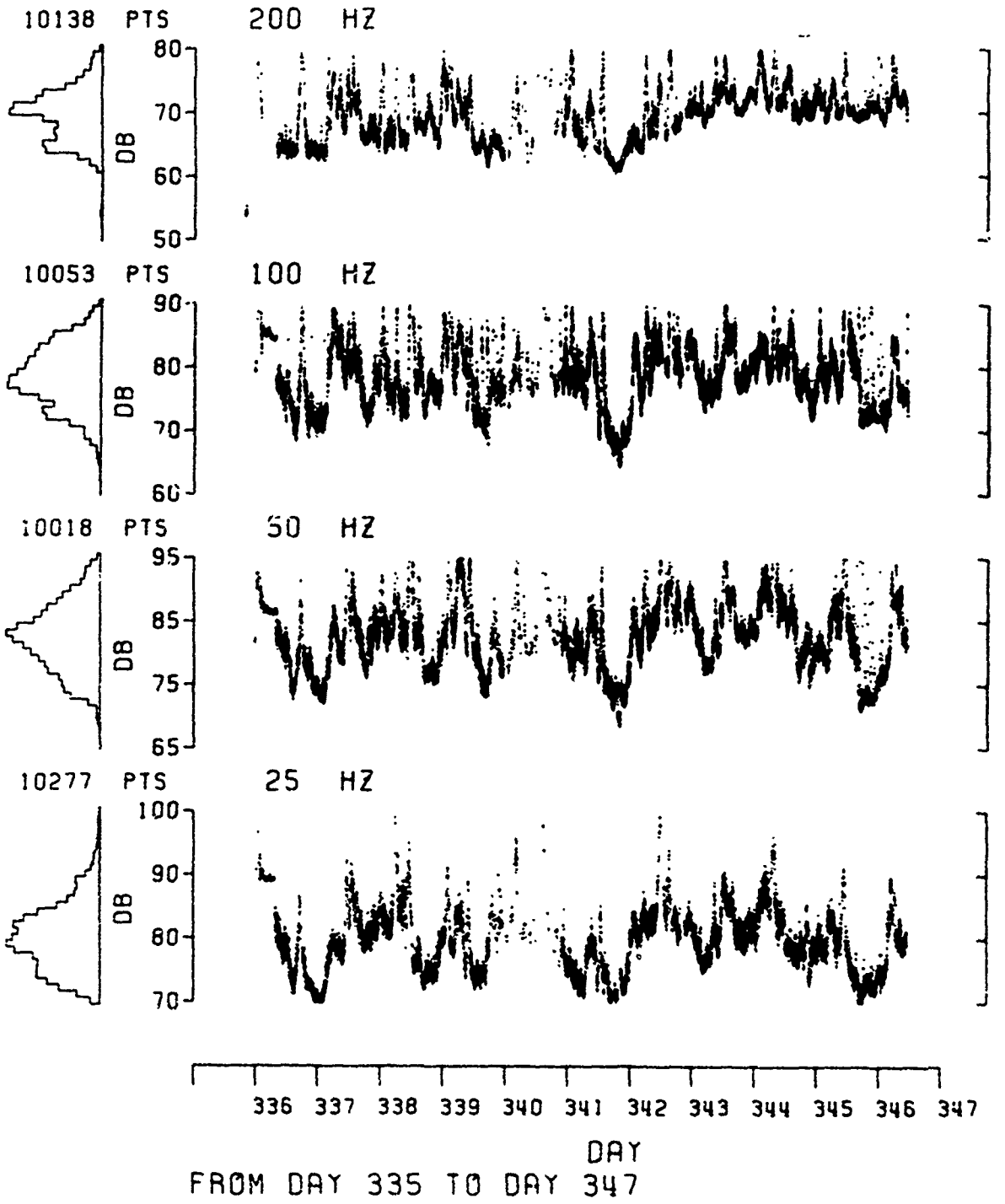

Figure 23. Ambient Noise Plot of Selected Third Octave Bands

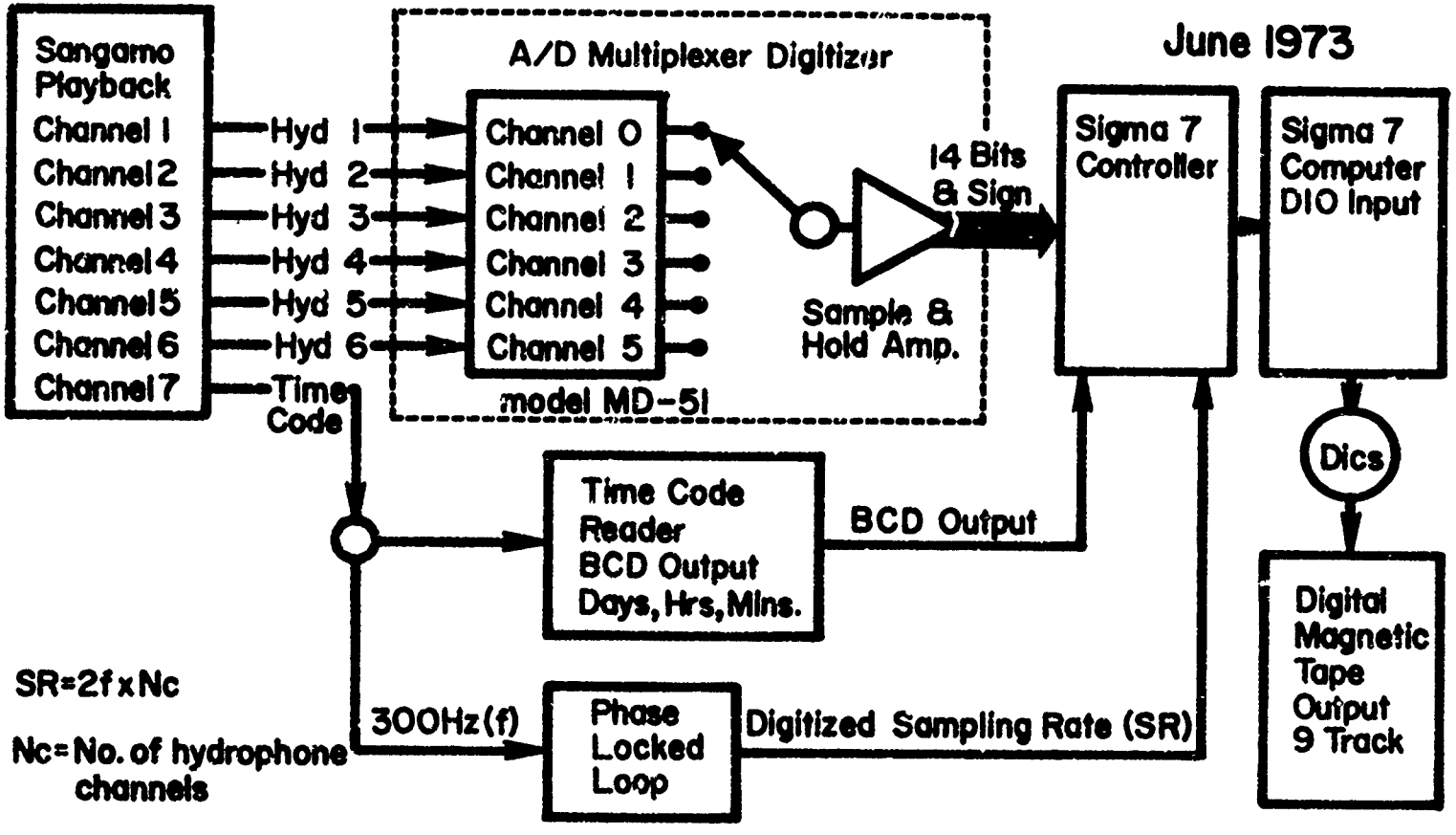

Figure 24. Sigma 7 - Narrow Band Analysis System for Ambient Noise

The program has the ability to set the full scale gain of the digitizer to obtain maximum resolution of the digitized data point. Resolution of the MD-51 is 14 bits plus sign. Automatic gain can be provided by the computer allowing for full scale resolution of input voltages of 1.25, 2.5, 5.0, and 10 volts. The input voltage level from the tape playback will normally not exceed a maximum of 2.5 volts full scale. This represents a gain of 4:1.

The computer program sets the A/D converter to digitize 6 channels in the sequential mode with clock, meaning that the zero axis crossing detector triggers the convert cycle at the sampling rate set by the time code reader signal connected to the detector.

The computer control word sets the digitizer to the double word transfer mode such that two 15-bit data points are accumulated in the controller before the 32 bit word is transferred to the computer. This method will effectively reduce the A/D-to-computer throughput rate by one half.

The program will detect one full scan of six hydrophone channels (A/D channels 0 through 5) by testing the 32 bit transfer for bits 15 or 31 set to "1". Since two data points are packed per 32 bit word, the first conversion will always be in the right half of the 32 bit word (bits 16-31) while the second conversion will show up in the left half of the 32 bit word (bits 0-15). Since an even number of channels are being digitized (6 hydrophone channels total), bit 15 of the left half when set to "1" will indicate that the right half of the next 32 bit transfer will be the start of a new scan, or channel 0. The output format for a dual halfword transfer is shown on the following page.

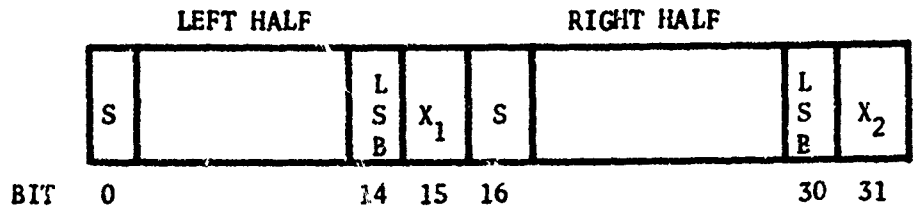

S = SIGN BIT

X_1, X_2 When bit is set indicates that one complete scan has elapsed.

10.2 Digitizer Sampling Rate

The sampling rate of the digitizer is controlled by the Zero Axis Crossing Detector. This box is connected between the output of the time code signal recorded on the ACODAC tape and the "sampling rate input" to the digitizer.

A 294.12 Hz signal is modulated on the time code signal. This frequency is the maximum frequency of interest (in hydrophone time) for analysis. In sampling a time function, this implies that the system must be able to sample slightly more than twice per period of the highest frequency one wishes to resolve. This makes reference to Shannon's sampling theorem where

$$F_{max} < \frac{1}{2\Delta t} \qquad (10.2\text{-}1)$$

where: Δt = sampling period

F_{max} = maximum frequency of interest

The zero axis crossing detector is designed to generate the Nyquist frequency of 588.24 Hz and to multiply this signal by six, the number of hydrophone channels being sampled.

A playback rate of 10 to 1 speedup is used to digitize the hydrophone data. Therefore, the overall sampling rate as seen by the digitizer is:

$$\text{Sampling Rate} = 2\ f \times N_c \times S \qquad (10.2\text{-}2)$$

or

$$= 2\ (294.12)(6)(10)$$

$$\text{Sampling Rate} = 35{,}294.4 \text{ samples/sec.}$$

where F_{max} = Maximum frequency of interest (hydrophone time)

N_c = Number of hydrophone channels

S = Playback rate

10.3 Frequency Resolution

Frequency resolution (Δf) is defined as the reciprocal of the total record length, T, or

$$\Delta f = \frac{1}{T} \qquad (10.2\text{-}3)$$

For ACODAC Analysis, a one Hertz resolution has been desirable. To obtain this resolution, the length of time required to digitize one continuous analog data section is one second in hydrophone time. Since a playback rate of 10:1 is employed, this time is reduced to 0.1 seconds for each data section.

The maximum number of data points, N, required to obtain a one hertz frequency resolution based upon the maximum frequency of interest of 294 hertz (hydrophone time) is therefore

$$N = \frac{2F_{max}}{\Delta f} = \frac{2(294)}{1} = 588 \qquad (10.2\text{-}4)$$

10.4 Analog Filtering and Aliasing

ACODAC ambient noise data is digitized so as to obtain a spectral resolution of one hertz bands to a maximum frequency of 300 Hz in hydrophone time. To avoid aliasing below the maximum frequency selection point requires the use of a low pass analog filter and a determination of the folding frequency, a factor characteristic of the type of filter used.

Aliasing is a phenomenon, inherent in analog input devices which results in higher frequencies being folded back onto lower frequencies, making the

user believe that there are frequencies present below the maximum frequency selected which in fact may not be there.

To circumvent this problem, analog filters such as the Allison type can be used between the data output channels of the Sangamo playback unit and the input to the analog channels of the digitizer. The cutoff frequency of the filter is set to have a flat response to the maximum frequency of interest, in this case, 300 Hz, and to roll off beyond this frequency at some rate of attenuation to prevent "folding back" of the higher frequencies.

Since analog filters do not have a sharp drop off, or attenuation, at the cutoff frequency selected, frequency and amplitude information around the 300 Hz band will be somewhat distorted and misleading. To prevent this, the filter cutoff point is taken higher than the expected maximum frequency of interest.

10.5 Initializing Parameters

The program uses the following parameters entered via data input cards to initialize the digitizing program. These parameters are used to set the proper control functions of the digitizer as well as to label the digitized data which will be written on the output magnetic tape in the first file.

The following parameters will be used to set the control functions of the digitizer and time code reader.

1. Maximum full scale gain setting: 2.5 volts full scale.
2. Type of scan: sequential with clock
3. Digitizer Control Indicator: 1 - start the digitizing process on time code
   0 - start digitizing process on manual toggle.
4. Data points per transfer: single/double
5. Digitizing rate: rate per channel (hydrophone time)

6. Number of channels being digitized.

7. Playback ratio.

8. Duty Cycle.

9. Duty cycle reference time.

Label Data

In addition to the above initialization data, the following parameters will be written on the output magnetic tape and used to identify the digitized data:

1. Cruise No.

2. Deployment number

3. Mooring type

4. Ship name

5. Launch day number

6. Start time of data recording (Greenwich time)

7. Stop time of data recording (Greenwich time)

8. Recovery day number

9. Duty cycle (percent)

10. Date-time group of start of on time, if duty cycle is not equal to 100%

11. Time compression (example: 10:1 playback rate)

12. Playback tape speed

13. Mooring latitude and longitude

14. Hydrophone serial numbers (6 total).

15. Analog tape identification number

16. Comments: comments inserted at run time.

10.6 Sampling Control

Card inputs are used to determine what portions of the data will be digitized in order to (1) eliminate all shot intervals so that only ambient noise data is digitized, or (2) eliminate all ambient noise portions in order

to digitize only shot intervals. The Brush recorder analysis may be used to select those intervals from the ambient noise tape which will be digitized.

A series of cards are keypunched prior to the digitizing process defining which sections of the analog record are to be digitized. Each card contains the following information:

T_0 - (Start time): in days, hours, and minutes of the start of the record to be digitized.

T_s - (Stop time): in days, hours, and minutes defining the time on the analog record to stop digitizing.

T - (Burst length): in seconds defining the total time of the sample record, where T is the total record length = number of samples X sampling interval. T is a measure of the frequency resolution desired (seconds in hydrophone time).

T_i - (Burst interval): in seconds defining the interval between start time of each burst (in hydrophone time).

Figure 25 illustrates an example where a section of the analog record is to be digitized from times 1230 to 1410 on day 288. Since a one hertz resolution is desired, T = 1 second. The burst interval T_i is picked at 10 seconds. The number of data sets, S, generated from digitizing in this mode is given by:

$$S = \frac{T_s - T_0}{T_i} = \frac{(110)(60)}{10}$$

$$S = 660$$

Therefore, 660 data sets will be generated and stored on output tape. This would provide 660 data blocks for time series analysis where each data block contained 1166 data points per hydrophone.

BURST MODE (Ambient Noise Analysis) June 1973

Determining the Number of Data Sets Generated in Burst Mode

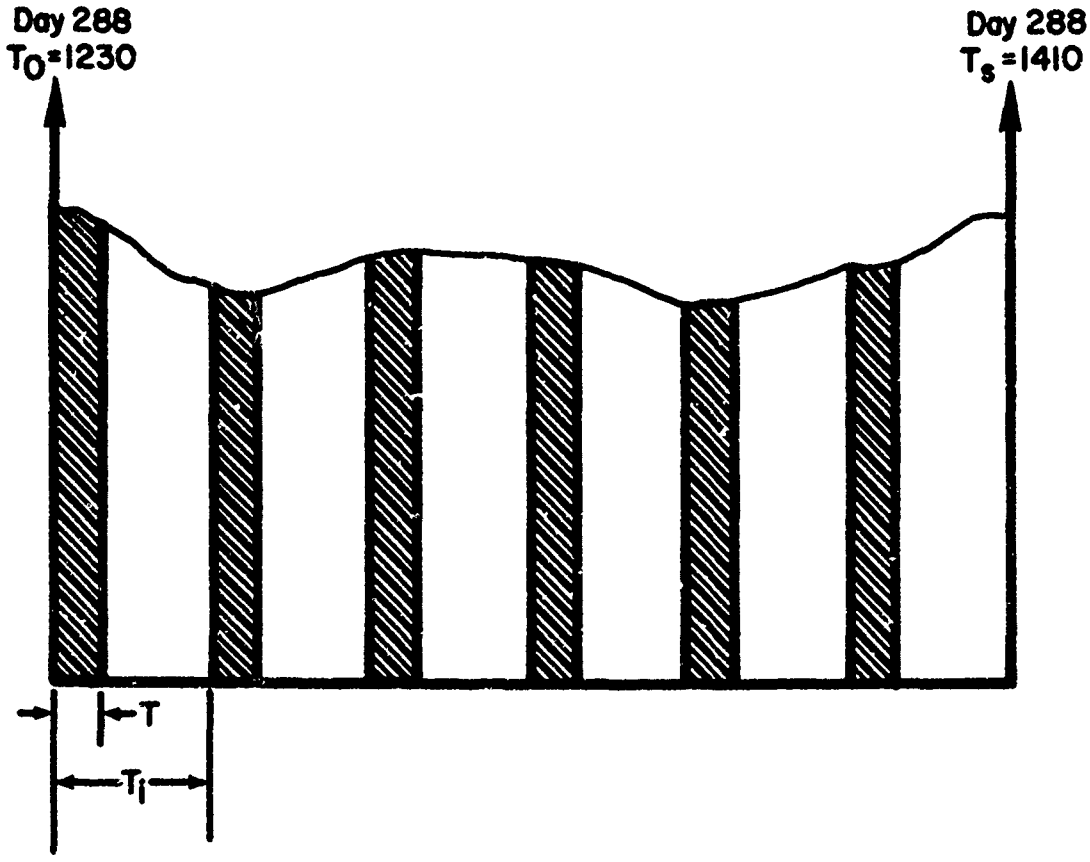

Digitizing the analog record in burst mode

Total data sets, S, accumulated.

$$S = \frac{T_s - T_0}{T_i} = \frac{110(60)}{10} = 660 \text{ data sets}$$

where T_s = stop time - 1410

T_0 = start time = 1230

T_i = burst interval = 10 seconds (hydrophone time)

T = burst length = 1 second (hydrophone time)

Figure 25. Burst Mode (Ambient Noise Analysis)

10.7 Digital Output Magnetic Tape Records

The output tape generated as a result of digitizing contains a tape label record plus sets of data records. Each burst is represented on the output magnetic tape by a set of records. The first part of each data record consists of a label containing:

Start time of burst

Record number within burst

End-of-burst indicator

For a given burst, the record number within the burst will start at 1, and increase monotonically thus enabling the program to determine the number of records within the burst. The last record in the burst will have the end-of-burst indicator set to one (1); otherwise this indicator will be zero. The next burst continues in the same manner, with no end-of-files between bursts, except that the record count starts again at 1 and increases monotonically. An end-of-file mark will be written at the end of all bursts on the tape.

10.8 Duty Cycle Considerations

Since either a continuous or a discontinuous duty cycle is expected for ACODAC moorings, the program has the ability to determine whether the intervals to be digitized in the burst mode represent a continuous time series during the on-time of the ACODAC recording process. Referring to Figure 26, it can be seen that if the time, T, the burst length, includes the off-time of the ACODAC tape recorder, a discontinuous time series would result. To circumvent the problem, the program computes the valid on-times of a series by using two parameters provided during the initialization phase.

1) Duty Cycle

2) Date-time group of start of on-time of recorder

For example, if the duty cycle for an ACODAC mooring is 50% (7 minutes on, 7 minutes off) and if the start time of the first on-time minute is given,

DIGITIZING WITH DISCONTINUOUS DUTY CYCLE

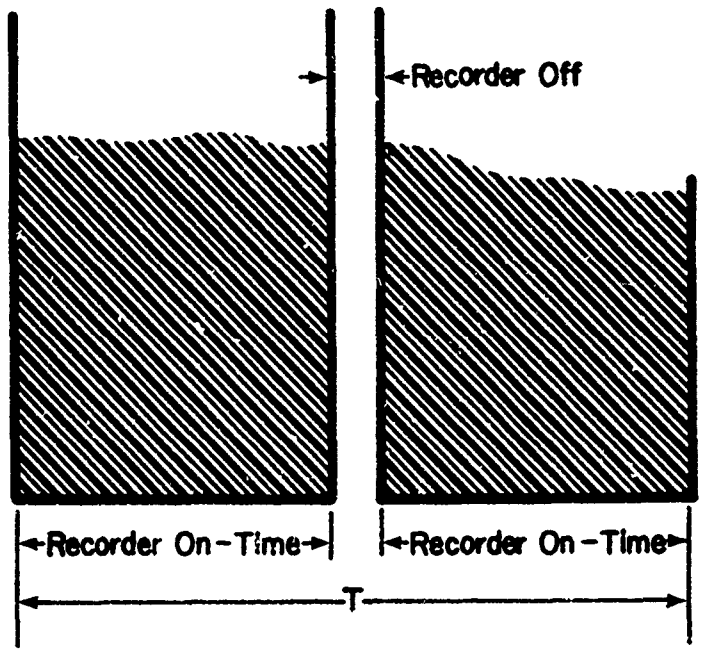

Discontinuous time series resulting from system digitizing analog record through ACODAC recorder turn off period.

Duty Cycle = 50% (7 minutes on - 7 minutes off)

T = Burst Length

Figure 26. Digitizing with Discontinuous Duty Cycle

the program can compute any valid on-time period in the analog record.

A test is made using the start and stop times of the burst in question to determine if any ACODAC recorder off time is present during this period. If any off time is found, the entire burst shall be rejected.

10.9 Digitizing Data from One to Six Hydrophones

The program has the ability to digitize data from one to six hydrophones connected to the analog inputs. The zero axis crossing detector has a hydrophone selection switch as part of the unit which is used to select the number of hydrophones connected for digitizing. Selecting the total number of hydrophone channels will effectively change the digitizer sampling rate by the number of hydrophones connected.

11. TIME SERIES ANALYSIS OF NARROW BAND SPECTRA

Once the digital tape is generated from the process described in paragraph 10 above, the output tape can then be entered in the normal SIGMA 7 batch processing environment for further processing. The Sigma 7 library contains standard time series analysis programs that can be used to obtain narrow band frequency spectra using fast fourier transform techniques to produce standard plots of frequency distribution, cross and auto correlation studies. Figure 27 shows a software flow diagram of the system.

12. DIGITAL PROCESSING OF TRANSMISSION LOSS (SHOT ANALYSIS)

12.1 Background

Digital processing of shot arrivals was first developed for project NEAT for the R/V KNORR cruise 24. Transmission loss data was successfully acquired and processed using a Hewlett Packard 2116 digital computer. Since then the program has been revised to process ACODAC shot data using basically the same methods employed as before with the exception that shot arrivals

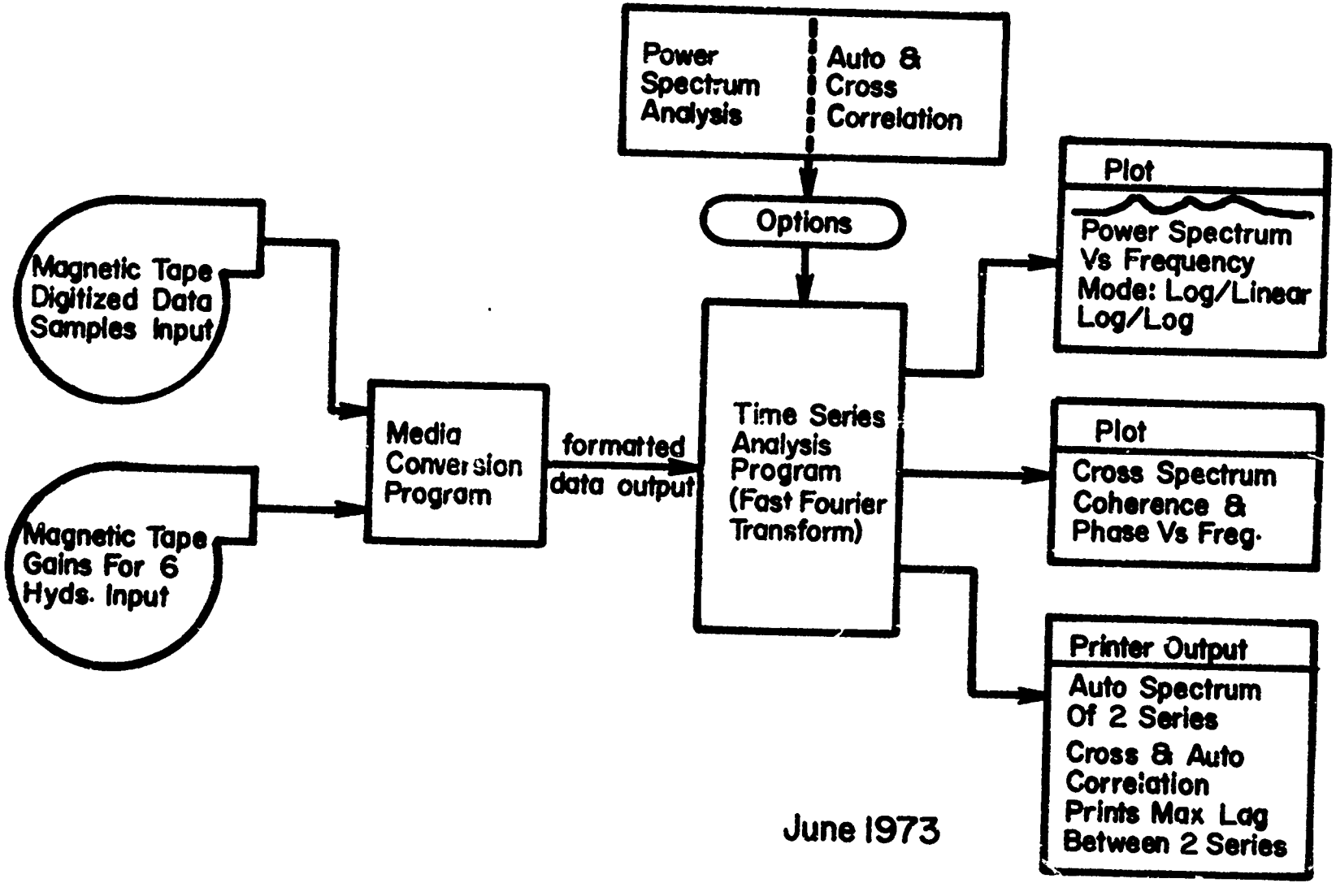

Figure 27. Acodac - Sigma 7 Narrow Band Ambient Noise and Time Series Analysis System

for ACODAC are recorded on the ambient noise analog tape whereas the shots from Project NEAT were processed in real time.

This report summarizes the two processing phases required to obtain transmission loss data from shot arrivals. Phase I describes the digitizing of shot energy, and phase II descripes the processing of the digital data to obtain transmission loss. Since the program is not fully operational as of this writing, a more detailed program report will follow at a later date.

12.2 Phase I - Analog-to-digital Conversion

Phase I involves the digitizing of signals from one hydrophone through two third octave filters to obtain energy levels of the 50 and 100 Hz components. The digitized voltage levels from the filtered channels are squared and partially integrated in the computer and the results written on magnetic tape. Time code and gain state information is also brought in to the computer and used in the output magnetic tape records.

The digitizing and recording process produces a series of magnetic tape records where each record consists of 1024 words plus a trailer of 15 words. The summing and squaring process produces a double word integer representing the sum of squares of n data points, where n is an input parameter and is typically set at 80. Each record thus represents 128 data points. A 12 KHz sampling rate is used for digitizing two input channels at a 300 Hz nyquist sampling rate with 20:1 playback time compression. Each record contains an identifying trailer consisting of the following parameters:

1. Start time at beginning of record.

2. Gain setting of hydrophone data amplifier at beginning of record.

3. Gain setting of hydrophone amplifier at end of record.

4. Deep/shallow shot indicator.

5. The time of the shot.

6. Two indicators showing whether an overload condition or a calibration cycle was encountered.

7. The bit configuration of a switch register which is used as a sense switch input.

During the tape playback process, an oscilloscope and loud speaker system is used to locate each shot arrival by listening to the signal being digitized. At a 20:1 playback, a shot arrival through the system sounds like a clicking noise generally distinguishable from the background noise. When a shot is recognized, a push-button switch is used to generate an interrupt to the computer which flags the record being accumulated as containing a shot.

The time at which the button was pushed is then stored on digital tape along with the other time and gain information.

12.3 Phase II - Data Analysis

In Phase II the analysis program reads the digital data records from Phase I and searches for records which have been flagged as containing a shot arrival. The flagged record is then displayed for the operator on an oscilloscope in a format which is essentially acoustic energy as a function of time for the period encompassed by the record. A typical display is shown in Figure 28. Ambient noise produces a gentle positive slope to the line of points. The arrival of a shot produces a steeper positive slope, the steepness depending on the signal to noise ratio. Manually controlled cursors are also displayed and are used to identify an interval of the record which may be used to determine an ambient noise power level which is subsequently displayed. Cursors on the "noise free" display are then

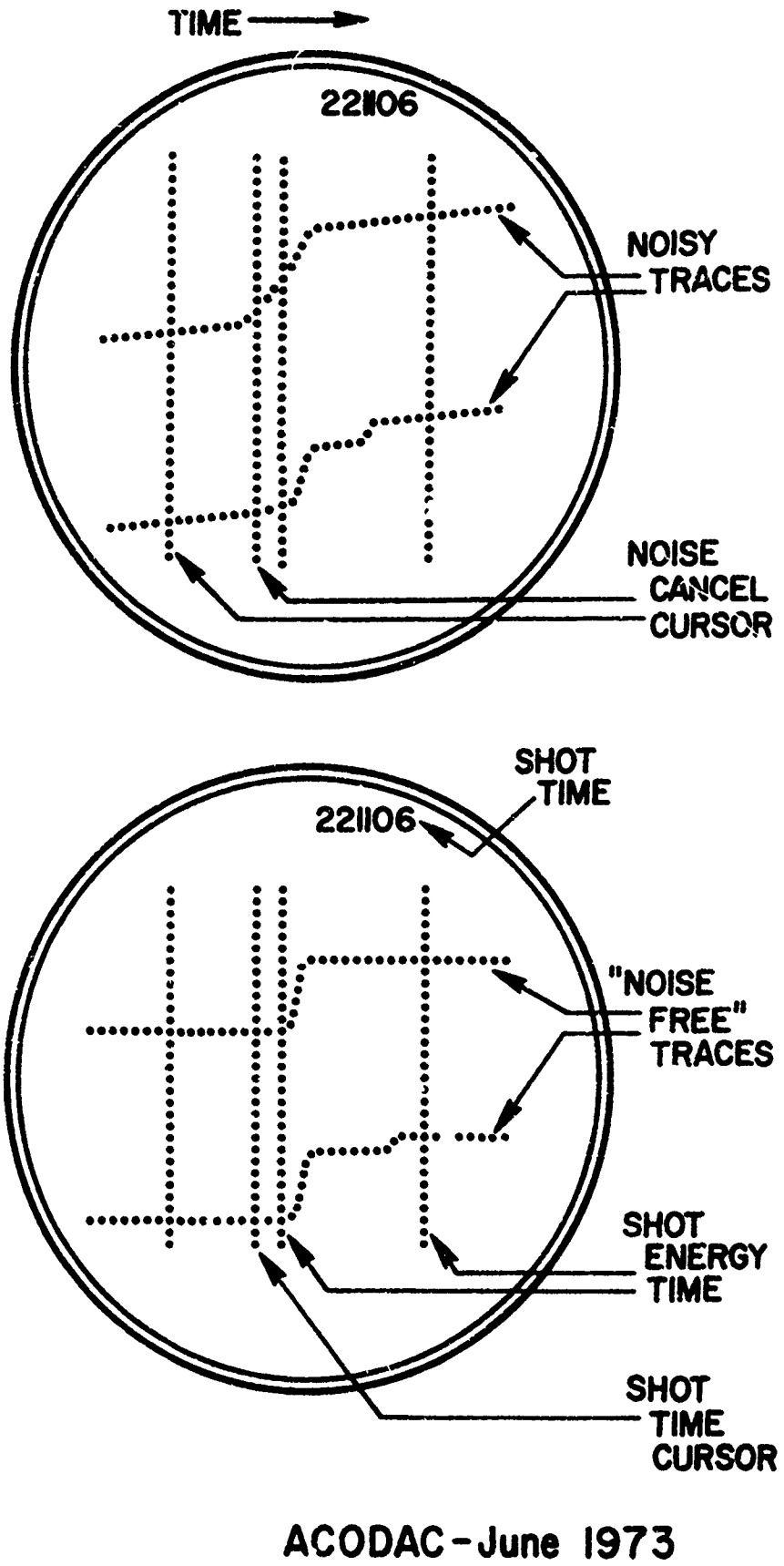

Figure 28. Typical Computer Oscilloscope Display of Shot Energy

aligned to encompass the shot, and the energy content of the shot is determined, and the program computes the transmission loss for the shot. One of the cursors is also used to get a more accurate shot arrival time by aligning it on the beginning of the shot in the display.

APPENDIX A

INSTRUCTIONS FOR USING PROGRAM ANPLOT TO PLOT ACODAC AMBIENT NOISE

These instructions show how to make a standard time series plot using the XD series ACODAC ambient noise edited tapes.

The following deck of instruction, control, and data cards is used:

1. !JOB card

   Computer control card specifying user number, priority and account number.

2. !MESSAGE cards

   !MESSAGE PLOT JOB ID _____

   !MESSAGE INPUT FROM XD _____-9T

3. !ASSIGN CARDS and !FTCOPY

   !ASSIGN F:PLOT, (DEVICE, 7T), (SN, PLT1), (OUT), (BIN), (UNPACK), (TRIES, 10)

   !ASSIGN M:EI, (DEVICE, 9T), (SN, XD _____)

   !ASSIGN M:EO, (FILE, TEMP)

   !FTCOPY

   !ASSIGN F:30, (FILE, TEMP)

4. !OLAY card

   (Assuming that anplot and its subroutines are stored on the disk in the ACODAC account.)

   !OLAY (EF, (ANPLOT)), (UNSAT, (3)), (MAP)

5. !RUN card

   !RUN

6. !DATA card

7. Run time comment card

72 characters on this card will be reproduced at the top of the plot.

For example: PLOTTED 6 FEB 73 FROM XD11-9T L. BAXTER, II

7a. Run time header card

72 characters reproduced below run time comment

8. Unit reference number card

In format (I3) punch unit reference number for input file.

Example: 30.

9. Printout parameters card

In format (5X, 5I5) punch LXFMX, LXPMX, LXNMX, LXQMX, LFLMX.

Where parameters control print-out as follows:

LXFMX = Maximum count for LXF where output on the printer will occur for data off the high end of the time scale with LXF = 1 to LXFMX.

LXPMX = Maximum count for LXP reading higher or lower than the extremes of the decibel scale will not be plotted. Output to the printer will occur for LXP = 1 to LXPMX.

LXNMX = Maximum count for unconditional printing of values from input tape. Values from input tape will be printed for LXN = 1 to LXNMX.

LXQMX = Maximum count for attempts to read header from input tape. Attempts to read header will be made until it is read correctly or until LXQ = LXQMX.

LFLMX = Maximum count for output checking DATRD. This output will occur for LFL = 1 to LFLMX.

The card used at present has the following:

20	100	20	5	10

10. Factor card

Scales of the basic plot are multiplied by this factor in format (F4.2)

2.50 fills the plotter paper

1.50 gives a smaller plot and reduces PDP5 plotting time.

11. Selector card

Usual lower db limits T or F

If this card is T, leave out the next card and minimum db plotted in db re 1 μbar will be as follows:

		(db re 1 μ Pascal)
XMIN(1) = -20.0		80
XMIN(2) = -20.0		80
XMIN(3) = -20.0		80
XMIN(4) = -25.0		75
XMIN(5) = -25.0		75
XMIN(6) = -25.0	50 Hz	75
XMIN(7) = -30.0		70
XMIN(8) = -30.0		70
XMIN(9) = -30.0		70
XMIN(10) = -31.0	125 Hz	65
XMIN(11) = -35.0		65
XMIN(12) = -40.0	200 Hz	60
XMIN(13) = -40.0		60
XMIN(14) = -45.0		55
XMIN(15) = -50.0		50
XMIN(16) = -50.0		50

12. Lower DB limit card in format (16F 4.1)

If one wishes to change any of the above values, card section 11 above must be F and card 13 must have a value entered for each channel that will be plotted. Channels not plotted will be changed to zero by blanks but this will not have any effect on the plot. Note: in present version of ANPLOT all values except the final plot are in db re 1 μbar - the final plot is in db re 1 μ Pascal.

13. Selector card

Usual scales - T or F

Note: the scales are determined by several parameters:

Factor has already been set above and determines over-all size of plot. The dimensions given below are those for factor = 1.0.

Variable name	Value for t	Remarks
SCALY	36.0	hours per inch
SCALX	30.0/2.0	decibels per inch
YAXL	8.5	length of time axis in inches
XAXL	2.0	length of each decibel axis in inches
XDISP	20.0/30.0	distance between time series plots in inches
XOFS	1.5	distance from origin to first time axis in inches
ISCAL	24	hours per division
DBINT	1.0	decibel interval for histogram
HIMAG	1.0	
HIOFS	1.5	

14. Scales card (first in format (6 F 10.2)

    SCALY, SCALX, YAXL, XAXL, XDISP, XOFS

    for 24 hour plot this card will read

    300 1500 850 200 67 150

15. Scales card (second) in format (I5, 3F10.2)

    ISCAL, DBINT, HIMAG, HIOFS

    for 13 day plot this card will read

    3 100 100 100

16. Selector card

    Channel order to plot USUAL CHANNEL ORDER T or F USE "F" Note: this gives control of channels to plot to the following cards otherwise (in current version) prog would attempt to plot 1 thru 16 and there are only 15 channels of data returned by DATRD on ACODAC TAPES the 16th is set to zero.

17. Channel plot control cards - In format (3I8)

    punch ICHPL (I), IFRK (I), IDP (I)

where ICHPL (I) is integer 1 to 15 (or 999)

IFRK (I) is frequency in Hz

IDP (I) is depth in meters

Note: where all channels are the same depth as they are when plotting one hydrophone at different frequencies, leave IDP blank and it will not appear on the separate time series plots.

Note: if ICHPL (I) = 999 that card terminates the series of channel plot control cards

Example of channel plot series:

6	50}	
10	125}	4 cards
12	200}	
999		

3 channels will be plotted - one each for 50, 125, and 200 Hz

18. Origin card - In format (2I5)

    IDABG, IHRBG

    where IDABG is an integer 0 to 365

    and IHRBG is an integer 0 to 23

(Giving the day of the year and hour of the day for the origin of the time axis)

19. Selector card T or F

    T = NO DELETIONS

    F = YES THERE ARE DELETIONS

at run time - if T skip (i.e. leave out) 21. and 22.

20. Card for number of deletions - In format (I2)

    punch an integer 1 to 20 for number of run time deletion intervals desired

21. Parameter card for each deletion interval

    In format (Z4, 1X, I3, 1X, I4, 1X, I4)

    punch ICHWD, IDAY, IHRM1, IHRM2

ICHWD is a hexidecimal number representing the 16 bit binary with 1 bit for a deleted channel 0 bit for non-deleted channel where channel in this case refers to the time series in order plotted. Thus to delete an interval in

the first and third channels plotted would call for ICHWD = 5. To delete in the first, fourth, fifth, and nineth ICHWD = 119. To delete in the first, third, fourth, and fifth channels plotted. ICHWD = 1D

IDAY is an integer 0 to 365 representing the day of the year on which the deletion begins.

IHRM1 and IHRM2 are 4 digit numbers representing hour and minute the deletion begins and hour and minute it ends. If IHRM2 is less than IHRM1 the program assumes that the deletion ends on the following day otherwise both hour and minute numbers are assumed to be on the same day. There will be one parameter card for each deletion interval required. That is the number of parameter cards equals the number of deletions given in card 21.

22. Selector card

F to terminate run with this plot and file

T to plot another graph on another file of plot tape.

normally use F

T would be used only if one desired in the same run with the same input tape to re-enter the program to plot for example a different set of frequencies on another plot entirely. In this case additional data cards must be provided like those from 8 through 23, etc. finally terminating the last file and the run when a 23 selector card is punched with an F.

APPENDIX B

PROGRAM DESCRIPTION: ACOSTAT

NAME: ACOSTAT

TYPE: Main Program and subroutines

PURPOSE: To provide statistical and graphical output of the ACODAC data.

MACHINE: Xerox Sigma 7

SOURCE LANGUAGE: FORTRAN IV (Extended)

PROGRAM CATEGORY: Data processing - analysis

DESCRIPTION: The program system ACOSTAT is used to process the Sigma 7 digital tape of the 1/3 octave ACODAC data. The user has the option of outputting the statistical summary of selected frequency bands, db distribution of selected frequency bands, and/or the plots of all frequency bands. All summaries are broken down into 12 hour intervals. All edited points ($|db| \geq 95.0$) are excluded from the output summaries.

INPUT: The input is from the Sigma 7 ACODAC digital data tape and from data cards.

Card Input

Card 1 - Input tape record structure

LHD	Columns 1-10	length of header identification record (number of Sigma 7 words).
LID	Columns 11-20	length, in Sigma 7 words, of hour/minute data calibration identifier.
IPM	Columns 21-30	number of integration periods per minute.
MPR	Columns 31-40	the duty cycle, or number of minutes of data per record.
NBN	Columns 41-50	number of frequency bands of data.

All of the above are integer values, right justified in the field.

Card 2 - Unit device code for digital tape mount.

NT	Columns 1-10	unit device code of unit on which Sigma 7 digital data tape is to be mounted. This must be the same as the DCB assignment on the !ASSIGN card for the tape. Integer value, right justified.

Card 3 - Plot option specification

IPLT	Columns 1-3	YES for plotting; blank or NO to delete plotting
DBIN	Columns 11-20	the plot scale, in db's per inch.

Card 4 - Statistics option specification

NST	Columns 1-10	right justified integer specifying the number of bands for which statistical summaries are desired. If blank or 0 (zero) no statistics are output.

Card 4 + ...(NST/8)

$IBAN_{1-NST}$	If NST > 0, the next cards contain the frequency band numbers for which statistical summaries are desired. Each band number is entered as an integer, right justified in fields ten columns wide. The value NST specifies the number of band numbers to input. If more than 8 were specified, a second card is necessary.

Card 5 + ... + (NST/8) - Histogram option specification

IHIST	Columns 1-10	right justified integer specifying the number of bands for which histogram summaries are desired. If blank or 0 (zero) no histograms are output.

Remaining Cards

$IHBAN_{1-IHIST}$	If IHIST > 0, the next cards contain the frequency band numbers for which histogram summaries are desired. Each band number is entered as an integer, right justified in fields ten columns wide. The value IHIST specifies the number of band numbers to be input. If more than 8 were specified, a second card is necessary.

Tape Input

The input tape is the Sigma 7 ACODAC digital data tape which was created from program ACOEDIT. The record structure of the binary tape is described below.

Record 1 is the header identification record. Its word length is specified by the input variable LHD.

Records 2 to the end of file.

Word 1 packed word containing the integer day number in the leftmost 16 bits and the integer hour/minute identifier in the rightmost 16 bits.

Word 2 packed word containing the integer value of the data type identifier in the leftmost 16 bits and the integer value of the gain setting integer value in the rightmost 16 bits.

Word 3 real value of the transfer function.

Words 4-18 edited db data values for each of the frequency bands during the first integration period of the hour/minute specified in word 1.

Words 19-33 same as above for second integration period.

Words 34-48 same as above for third integration period.

Words 49-63 same as above for fourth integration period.

Words 64-78 same as above for fifth integration period.

The format of words 1-78 is then repeated for the next hour/minute identifier in the record. There are currently seven such cycles per record.

Note that the record structure above is determined by the card input data.

OUTPUT: The output is determined by the user. Run information, statistics, and histograms are done by the line printer; plotting is done by a Calcomp plotter.

Automatically output to the line printer is a run identification. An example is shown in Figure 20. If the statistics option was chosen, every twelve hours the statistics for those frequency bands selected are output as shown in Figure 21. For the histogram option, every twelve hours the histogram of db distribution is output for each of the selected frequency bands. An example of the histogram is shown in Figure 22.

A twelve hour summary of all frequency bands may also be output to the plotter. Each curve is determined by points representing the means of each record. Thus, a curve will have one point for the mean power of all valid points in a seven minute cycle.

$$\overline{P}_{db} = 20.0 * LOG_{10}\left(\frac{1}{n}\sum_{i=1}^{n} 10^{\frac{P_i}{20.0}}\right)$$

where $\overline{P}_{db}$ is the average power in db

n is the number of accepted points in the duty cycle (seven minutes)

USAGE: The program is treated as an ordinary FORTRAN IV main program. The job setup is described in Figure 4. If the plotting option is specified, the user must submit the appropriate special action card with the job deck. The first message card requests that the plot tape, if used, be saved. The user may wish to change this feature and plot directly. The Computer Users' Handbook or a member of the IPC staff may be consulted if the procedure for changing is not understood. If plotting is not used, the F:PLOT device assignment should be changed to (DEVICE, NO).

Figure 4

```
!JOB aaaa, uuuu, p
!MESSAGE LABEL AND SAVE 7T, 2400 FT TAPE ---- FOR PLOTTING
!MESSAGE MOUNT ----, ENABLE WRITE
!ASSIGN F:PLOT, (DEVICE, 7T), (SN, ---), (OUT), (BIN), (UNPACK)
!MESSAGE MOUNT TAPE ----, 800 BPI (DIGITAL DATA TAPE)
!ASSIGN F:1, (DEVICE, 9T), (SN, ---), (IN), (BIN)
!FORTRAN GO
    FORTRAN program deck goes in here with subroutines
!OLAY (MAP), (UNSAT,(3)), (GO)
!RUN
!DATA
    card data goes in here
!EOD
```

RESTRICTIONS: Provision has been made to handle only one input data tape per run. Currently dimensioned to handle 20 frequency bands, 200 frequency db intervals, 40 points per band per cycle, 10 minutes per cycle (record), 200 plot points per band per twelve hour period.

STORAGE REQUIREMENTS: $18,450_{10}$ words.

SUBPROGRAMS REQUIRED:

PLOTID - used to set up all the titles and identifiers used on plots

STORP (IND, NBN, IPR) - used to calculate the mean power of a cycle and store. Also determines frequency distribution.

IND	plot point index
NBN	number of frequency bands
IPR	number of integrations per record.

BPLOT (BEGHR, FINHR, IND) - used to plot the twelve hour summaries.

BEGHR	hour at beginning of plot
FINHR	hour at end of plot
IND	number of points in plot

CHKIN - used to ensure that plot point falls within boundary.

BSTAT (IC, NCLS, CLSINT, XMIN, XMAX, CUL, NX) - used to calculate the statistics for the twelve hour summaries.

IC	array index of current frequency band
NCLS	number of intervals in distribution range
CLSINT	size of interval
XMIN	minimum frequency db value
XMAX	maximum frequency db value
CUL	upper limit of each interval in range
NX	population of each interval

CHISQ (NT, RM1, SD6, NI, X2) - chi square test of fit for normal distribution.

NT	total number of points for band in summary
RM1	mean of points
SD6	standard deviation of points
NI	degrees of freedom minus 3
X2	chi squared

CDF (NI, RM1, SD) - calculates the degrees of freedom of the db distribution curve.

NI	number of degrees of freedom
RM1	mean db of point in frequency distribution for band
SD	db standard deviation of points in frequency band

ARNRM (Z, TOL) - calculates the area under a normal curve for the current frequency band distribution of db values.

Z	standard deviation of enlarged intervals
TOL	tolerance

STOUT (MINB, BEGHR, FINHR) - outputs the statistics calculated in BSTAT.

MINB	minimum frequency band number
BEGHR	hour at beginning of statistical summary period
FINHR	hour at end of statistical summary period

HISTO (MINB) - calculates and outputs the histograms

MINB	minimum frequency band number

Additional library routines: PLOTS, PLOT, SYMBOL, NUMBER, AXDRAW, ISA.

OPERATIONAL ENVIRONMENT:

Device	Function	Special requirements
card reader	input	F:105
line printer	output	F:108
Sigma 7 ACODAC digital tape	input	user specified
plots	output	F:PLOT

OPERATIONAL CHARACTERISTICS:

To start, the user must include the appropriate device assignment cards for plotting. The card data is then read in, followed by the input of the digital tape header record. After initialization of variables and determination of output options, a run identification record is output to the line printer.

A data record is then input from the digital tape. Its time is extracted and compared to the current summary interval limits. If it falls within the limits, its location in the frequency distribution table for the band is determined, along with the mean of the valid points within the record. This mean (and its standard deviation) are stored for plotting. When the summary period (12 hours) is complete, the options requested are executed. The appropriate variables are cleared and the loading procedure is initiated for the next sequence.

Only those points with absolute db values less than 95.0 are considered as contributing toward any summaries.

TIMING: The program run time will vary depending on the number of output options requested by the user. The following estimates may be used for computing run times:

program compilation	4 minutes
input and interval assignment	1.25 minute/day's data
plotting (Sigma 7 time)	0.25 minute/day's data
statistics	1.00 minute/day's data
histograms	negligible
plotting	approx. 25 minutes/day (2 plots)

ERRORS & DIAGNOSTICS:

HEADER RECORD ERROR - STOP 152

There is something amiss with the input tape. Either the header record is in error or does not exist.

READ ERROR - LAST DAY III JJJ STOP 210

An input error was encountered in reading the input digital tape

PLOTTING COMPLETED

The plotting for the current summary period was successfully completed.

STATISTICS COMPLETED

The statistics for the current summary period were successfully completed.

HISTOGRAMS COMPLETED

The histograms for the current summary period were successfully completed.

PROGRAMMER: Roger Goldsmith

ORIGINATOR: Roger Goldsmith

DATE: November 1972

REFERENCES: ACOPPE program report
ACOEDMOD program report
ACOEDIT program report

APPENDIX C

ACODAC SIGMA 7 THIRD OCTAVE DATA EDIT PROGRAM

REPLACES TAPEWRITE

Control Cards

Control card type # right justified in columns 1-5 (I5)

Followed by 15 5-bit column data fields (15F5.0)

TYPE 0 Time window and processing control (must be last card of set)

Field 1-3 start time: days, hours, minutes.

4-6 stop time.

7 = 0: use original transfer function.
≠ 0: use new transfer function.

8 ≤ 0: use time window to control processing.
> 0: count of number of records to process (ignore time window).

9 ≤ 0: do not skip any records before processing.
> 0: count of number of records to skip before processing.

TYPE 1 Band corrections

Field 1-15 band corrections for individual bands

TYPE 2 Universal correction

Field 1 correction to all bands

TYPE 3 Control information

Field 1 ≤ 0: no output tape dump.
> 0: number of records of output tape to dump at end of run.

2 > 0: new fraction to be used in heuristic check.
≤ 0: no change to fraction (default = .5).

3 > 0: maximum day number to believe from time code reader.
= 0: no change to maximum day number (default=12).

4-6 time to be added to tape time for output: days, hours, minutes.

7 = 0: pass through editing.
≠ 0: do not pass through editing.

	8	= 0: do not change maximum error message counter. ≠ 0: new maximum error message counter.
	9	= 0: do not dump input records. ≠ 0: dump input records.
	10	= 0: write output tape. ≠ 0: do not write output tape.
	11	= 0: use tape time for time windows. ≠ 0: use corrected time for time windows.
	12	= 0: normal processing. ≠ 0: give user subroutine "PROC" control for each data minute.
TYPE 4	Fields 1-15	number of minutes to be used in each of 1 to 15 averages.
TYPE 5	Fields 1-15	= 0: normal processing ≠ 0: gives user routine "TIMER" control when corresponding average is computed.
TYPE 6	Field 1	logical unit number from which to read subsequent control cards.

APPENDIX D

STAND ALONE GENERAL PURPOSE ANALOG TO DIGITAL CONVERSION PROGRAM FOR AMBIENT NOISE ANALYSIS USING A HIGH SPEED MULTIPLEXER DIGITIZER

NAME: SAGPAD (Stand Alone General Purpose Analog to Digital)

TYPE: Stand Alone Main Program

PURPOSE: The program is designed to provide A/D conversion on the Sigma 7 for ACODAC analog data tapes. Since most parameters are dynamically set, it can be used as a general purpose A/D program

MACHINE: Sigma 7

SOURCE LANGUAGE: Metasymbol

PROGRAM CATEGORY: Utility

DESCRIPTION:

SAGPAD is a stand alone program designed to be loaded and run with the Xerox stand alone loader with I/O handlers. The program reads analog data via the Sigma 7 analog to digital converter and writes it to a 9-track magnetic tape. The operation of the SAGPAD may be divided into two phases:

I. Parameter Input and Intitialization

During this phase the program reads parameter cards which define the environment in which it is to operate, the modes of operation, and identification data for the output tape header record. Using this data, the program calculates its operational parameters and sets up an internal clock which will operate at a rate which reflects real time with respect to the actual collection of the data. This is referred to as hydrophone time. For example, if the playback ratio is 10:1, the clock will be set to operate at 10 times wall clock time.

If the user is digitizing by a predetermined schedule, based on time, the program will next read a series of shot cards and set up a schedule of operations.

II. Digitizing

This phase digitizes the data and writes it out on magnetic tape. If the manual mode is being used, the program digitizes a burst every time the user presses the interrupt button on the A/D unit.

If in automatic mode, the program compares the digitizing schedule, set up in phase 1, against its internal clock and digitizes as the schedule directs.

If the analog tape contains an IRIG "C" time code channel, the user may direct the program to read it between shots for the purpose of updating the internal clock. This minimizes differences between the internal clock and hydrophone time which are bound to accumulate after a period of time due to playback rate inaccuracies.

The actual digitizing is done via a read direct loop with no interrupt being used. This assures the fastest possible rate, up to 100,000 15-bit data points a second. Since this rate is far too fast to allow direct transfer to magnetic tape, the data is temporarily stored on disk during the digitizing. Two core buffers are used. While the data is being stored into one buffer, the other is being written to disk. When the input buffer is full, the buffers are switched. This process continues until the digitizing burst is done.

When the burst is finished, the data stored on the disk is read back into core, split up into tape record size, and written to magnetic tape. When this is done the program is ready to digitize another burst. When all bursts call for are done, the program writes a double end-of-file on the output tape, backspaces over the second one and terminates. This allows more than one data file to be stored on one tape, if desired.

INPUT: I. Card Reader

A. General Parameter Cards

These cards define general operating parameters. Each card is identified by a key which is always four characters long. The card format is as follows, starting in column 1:

$$\text{Key, } P_1[,P_2,\ldots,P_N]$$

Imbedded blanks are not allowed except in character strings. The brackets denote optional values on multi-parameter cards. They do not appear on the card.

There are three types of parameters.

1. Character string - there may be any EBCDIC characters up to the maximum call for by the particular item. They are stored as is.

2. Integer - these are represented by decimal numeric characters only and are stored as 32-bit binary integers. A sign may precede the number. Examples: 6
   -100
   5025

3. Real - these are represented as a decimal numeric string which may contain a decimal point. The numbers may be

signed. They are stored as Sigma 7 single precision floating point numbers.

1.5
-2.6
35.
0.51
.75
25.

The following table lists the allowable parameters.

The column labelled KEY gives the 4-character identifier which is punched in columns 1-4 of the card.

TYPE refers to parameter type where C stands for EBCDIC characters, I for integer and R for real.

The column labeled NUMBER refers to maximum number of characters if it is a C parameter or the maximum number of parameter values if it is I or R.

The DEFAULT column shows the initial default value which will be used if the item is not specified. Input values for a run will become the default values for the next run unless the program is reloaded.

The DESCRIPTION column describes the parameter. Descriptions preceded by an asterisk are not used by SAGPAD but are output as part of the header record for subsequent use or identification. The description of these items refers to their use by subsequent ACODAC processing programs. Non-ACODAC users may use them for any purpose they wish.

B. Comment Cards

The user is allowed up to five cards (400 characters) of comments which will be placed at the end of the output tape header record. The set up of the comment deck is as follows:

:COM	comment Key card up to five cards of comments
:END	signals end of comments.

C. Shot Specification Cards

Shot cards are used to set up a schedule of digitizing when operating in the automatic mode. There may be up to 100 shot cards. When operating in the manual mode only one (1) shot card is input and only the Burst Length is specified.

The set up of the shot deck is as follows:

:SHOTS	signals shot cards follow deck of shot specification cards
:END	signals end of shot cards.

GENERAL OPERATING PARAMETERS

KEY	TYPE	NO.	DEFAULT	DESCRIPTION
TPID	C	9	Blanks	*Output tape ID.
RLEN	I	1	2048	Output data record length in bytes, exclusive of header words.
NPPW	I	1	2	Number of data points from A/D converter per transfer (1 or 2).
GAIN	R	1	2.5	Gain setting for digitizer. Only 1.25, 2.5, 5.0, or 10.0 allowed.
TSCN	I	1	0	Type of scan. 0 = Sequential, 1 = Random.
CTRL	I	1	1	Digitizing control. 0 = Manual, 1 = Automatic using preset time schedule for digitizing bursts.
RATE	I	1	900	Digitizing rate per channel in hydrophone time.
NCHN	I	1	6	Number of channels being digitized (1-6).
PBCK	R	1	10.0	Playback rate of analog tape.
DPNO	C	4	Blanks	*DEPLOYMENT NO.
MOOR	C	4	Blanks	*MOORING TYPE.
LDAY	C	4	Blanks	*LAUNCH DAY.
YEAR	C	4	Blanks	*LAUNCH YEAR.
SGMT	I	3	0, 0, 0	Recording start time (GMT), Day, Hour, Minute.
EGMT	I	3	0, 0, 0	Recording end time (GMT), Day, Hour, Minute.
DTON	I	1	0	*Duty cycle on time.
DTOF	I	1	0	*Duty cycle off time.
RTSP	R	1	0.0	*Recording tape speed.
LATI	C	12	Blanks	*Mooring Latitude
LONG	C	12	Blanks	*Mooring Longitude

KEY	TYPE	NO.	DEFAULT	DESCRIPTION
HSTA	I	6	0 (all)	*Hydrophone station numbers. For ACODAC users there should be entered as they are ordered on the analog tape, i.e., the first number should be the station no. on channel 0, the 2nd on channel 1, etc. Unused channels should be set to 0.
HSEN	R	6	0.0 (al.)	*Hydrophone sensitivity numbers. These are ordered in the same manner as the station numbers.
GMTI	I	1	0	Indicate that time entered on shot cards are either relative tape times (0) or GMT (1). If GMT, item SGMT must be entered.
TCMX	I	1	10	Maximum allowable number of unsuccessful time code reads allowed before job aborts.
OVRX	I	1	1	Maximum number of missed digitizing bursts allowed. This occurs when burst intervals are too short to allow writing the data to mag tape.
TCWX	I	1	62	Maximum number of seconds (hydrophone time) program will wait for a time code interrupt before assuming read was unsuccessful.
TLAG	I	1	55	Time lag (in seconds of hydrophone time) between actual time and the finish of the time code generation.
TCDE	I	1	1	Time code indicator. 1 → Time code is present and is to be used for updating internal clock. 0 → Time code does not exist and/or is not to be used.

Each shot specification card describes a digitizing burst or series of uniformly spaced bursts in terms of hydrophone time. The card format is as follows (all values are decimal integer and are right-justified in the field):

Start time of shot or shot series

column 1-3	Days
column 5-8	Hours and minutes 24 hour clock format
column 10-11	Seconds

End time of shot series (not punched for single shot card)

column 13-15	Days
column 17-20	Hours and minutes
column 22-23	Seconds

Burst information

column 25-30	Burst length in milliseconds
column 32-35	Interval between start of bursts in seconds (not punched for single shot card)

where a burst is defined as a period of continuous digitizing.

Examples:

To specify one burst of 1.5 seconds duration to begin at time 1425:35 of day 1 (V are spaces):

001V1425V35VVVVVVVVVVVVVV001500

To specify a series of 2.25 second shots, spaced five minutes apart starting at 2230:00 of day 2 and ending at 0130:00 of day 3:

002V2230V00V003V0130V00V00225V0300

The shot cards must be input in increasing chronological order and there must be no intersection of time intervals.

II. Analog Input

SAGPAD reads digitized input and time code input via the A/D converter attached to the Sigma 7. The user must interface his analog tape with the converter and provide a suitable pulse source to determine his digitizing rate. He should consult with appropriate IPC technicians for help in accomplishing this task.

III. Sigma 7 Console Interrupt Button

This is used to signal the program to continue operation after it has entered the wait state to allow operator intervention.

IV. A/D Converter Manual Input Button

This is used when operating in the manual mode. It signals SAGPAD to start a digitizing burst.

V. Sense Switches

SAGPAD interrogates the Sigma 7 console sense switches periodically. Sense switch settings are interpreted as follows:

Switch #4

If switch 4 is on, the program will, each time it reads a time code, log out its value and the internal clock setting on the line printer. Time code read failures will also be logged out. This is a diagnostic tool and should not be used when actually digitizing.

Switch #3 and #2

Not presently used.

Switch #1

Setting switch 1 on will force the program to terminate. All normal end of run operations are executed. This is the normal way to terminate a manually controlled run. It may also be used to cut short an automatically controlled run.

OUTPUT: I. Line Printer

The line printer is used for listing input cards and logging out error and diagnostic messages. If an error is specific to a particular card, the error message is logged immediately following the card image.

When shot cards are listed, a sequence number is added. If an error occurs during the digitizing process, the sequence number of the currently active shot specification is printed along with the error message. This gives the user a general idea of where the program is in the digitizer "script."

II. Console Teletype

The teletype is used primarily to issue instructions to the operator. Generalized error messages are output to the teletype along with recovery instructions, if recovery is possible. The line printer output should always be checked if an error occurs, since it will generally give more complete information.

III. Magnetic Tape

The digitized data is output to 9-track 800 BPI magnetic tape. Each digitizing run results in one data file. The first record contains identification, parameter values for the run and user

comments. This is followed by data records containing the digitized data. The last data record is followed by a double end-of-file mark.

If more than one run is made using the same output tape, one end-of-file mark separates the data files with a double end-of-file following the last file on the tape.

A detailed description of the tape format follows. In the header record section, the column labeled "Input Key" identifies the input parameter which produces the item (see INPUT, Section I-A).

The data section consists of digitized points. They are written just as received from the digitizer.

The digitized output for a single point consists of 16 bits arranged as follows:

|S|	14 data bits	|X|
0 1		14 15

If single point per transfer is specified (NPPW=1), the 16 bits will be right justified in 32 bit Sigma 7 words on the output tape. If double point transfer is specified (NPPW=2), two 16-bit points will be packed in each Sigma 7 word. The order of digitizing will be rightmost point first, leftmost second.

The interpretation of each 16-bit point is:

Bits 0-14 represent a signed binary fraction in 2's complement form. The actual value of the input voltage to the digitizer is obtained by multiplying this fraction by the gain setting being used (set by user via parameter GAIN). In other words, the gain setting determines the full scale representation, plus or minus, of the digital fraction.

In practice the full scale value is not used, since a maximum plus or minus fraction may represent an overload condition. The ideal situation is to adjust the playback equipment so that the maximum input to the digitizer is slightly less than one of the four possible gain settings (1.25, 2.5, 5.0, or 10.0 volts), thus obtaining the greatest possible resolution without causing an overload condition.

Bit 15, labeled X, is used as an end of scan indicator when sequential scanning of several channels is specified. If this bit equals 1, it implies that this data point is the last in the scan and that the next point represents the start of a new scan.

USAGE: The program is designed as a stand alone system and must be loaded and run using the Xerox Stand Alone Loader with I/O Handlers. The loader is supplied as a bootable absolute binary deck. SAGPAD is supplied as a relocatable binary deck. The deck set up is shown below. All cards explicitly shown are essential. (V = blank)

ACODAC - SIGMA 7 DIGITIZER OUTPUT TAPE

Header Record Format

Word	
0-1	Tape I.D. any 8 chars. (EBCDIC)
2	Max. data record length in bytes (not incl. header) (Bin. Integer)
3	No. pts. per word (1 or 2) (Bin. Integer)
4	Gain setting for digitizer (Bin. Real)
5	Type of scan, 1 = random, 0 = seq. w/clock
6	Control, 1 = time code specs, 0 = manual control
7	Digitizing rate per second per channel in hydrophone time (Bin. Int.)
8	No. of channels being digitized (Bin. Int. 1-6)
9	Playback ratio during digitizing (Bin. Real)
10	Deployment No. 4 char. EBCDIC
11	Mooring type " "
12	Launch day no. 3 char. EBCDIC Rt. Just.
13	" year 4 " "
14	Start time of recording GMT Day (Bin. Int.)
15	" " " " " Hour "
16	" " " " " Min. "
17	Stop " " " " Day "
18	" " " " " Hour "
19	" " " " " Min. "
20	Duty cycle on time Min. (Bin. Int.)
21	" " off " " "
22	Recording tape speed (Bin. Real)
23	Mooring latitude 12 char. EBCDIC Rt. Just.
24	" " " " " " "
25	" " " " " " "

ACODAC - SIGMA 7 DIGITIZER OUTPUT TAPE (Cont.)

Word	Header Record Format
26-28	Mooring longitude 12 EBCDIC chars. Rt. Just. (3 words)
29-34	Hydrophone sta. no.'s in order they appear in data (6 words) (Bin. Int.)
35-40	" sensitivity no.'s in order they appear in data (6 wds) "
41	Reserved for future use (9 words)
49	Comments (words 49-99)
99	

EOR GAP

Data Record Format

Start of burst time in elapsed time (secs.) since recording start time (Bin. Int.)

Record number within burst rt. just. (Bin. Int.)

Last record in burst indicator (B3T 31) 0 = not last
1 = last

DATA - number of bytes given by word #2 of header record.

END OF RECORD GAP

Stand Alone Loader with I/O Handlers

```
!A F:LO, (DEVICE, LL)
!A F:OC, (DEVICE,OC)
!A F:C, (DEVICE, BI)
!L MAP, M100, N
```

SAGPAD relocatable binary deck

```
!EOD
!EOD
!R
```

user's input deck (see INPUT, section I)

The loading and running procedure is as follows:

A. Place deck in card reader and ready reader. Ready teletype and line printer also. Mount your output tape, dial unit to 0 and ready unit.

B. Set sense switch 1 on.

C. Boot from card reader.

D. When card reading stops (this will be just after Loader is read in), push console interrupt button. The teletype will print.

```
!!KEYIN
```

and wait for input. Type the following message.

```
!SYST C.CRA03 NL
```

This tells the loader to accept all further commands from the card reader.

E. Set sense switch 1 off. The loader will load SAGPAD and turn control over to it.

F. SAGPAD will type out

```
HIT CONSOLE INTERRUPT TO START
```

and will enter the wait state. This occurs prior to reading user's input decks. If this is a rerun, the user may place his next input deck in the reader. The output tape should be ready on unit A80 since SAGPAD will write a header record during the next phase.

When the console interrupt button is pushed, SAGPAD will read and process the input deck. If an error is detected, SAGPAD will flag it and enter the wait state, giving the user an opportunity to correct the bad card. Hitting the console interrupt will cause resumption of the read. See "ERRORS & DIAGNOSTICS" for more details.

G. When the input is read in satisfactorally, SAGPAD will write the header record on the output tape and type out

READY TO DIGITIZE - HIT CONS. INT. TO START

and will enter the wait state.

The user should now ready his analog input. When the console interrupt is pressed, the program will initialize its internal clock at 0 and enter the digitizing phase. If time code input is indicated, it will commence reading the time code channel and will reset its clock to stay in phase with the time code.

If the program is being run in automatic mode it will digitize as called for in the script set up by the shot specification cards. If manual mode, it will digitize only one command from the interrupt button on A/D unit.

H. Normal program termination may occur in one of two ways.

1. If in automatic mode, the program will terminate itself when all the digitizing specified on the shot cards is done. When this occurs, the program will type:

DIGITIZING RUN COMPLETED.

2. The operator may manually terminate the run by setting sense switch 1 on. This is the normal method of termination for a manual mode operation but it may also be used to effect early termination of an automatic mode run. If manually terminated the program will type:

DIGITIZING RUN MANUALLY TERMINATED.

In both cases the program will write two end-of-file marks on the output tape, backspace over the second end-of-file and will go back to step F, allowing the user to make another run.

RESTRICTIONS:

SAGPAD may only be run with the Stand Alone Loader with I/O Handlers. It cannot be operated under the Batch Processing Monitor.

STORAGE REQUIREMENTS

4800_{16} hex locations including buffers for SAGPAD proper. The Stand Alone I/O Handlers must also be in core at run time.

SUBPROGRAMS REQUIRED: None.

OPERATIONAL ENVIRONMENT:

Device	Function	Special Requirements
console interrupt	input	none
console teletype	input/output	none
A/D unit	input	See INPUT section
line printer	output	9-track 800 BPI
magnetic tape	output	Unit must be set to "A80", i.e., selector turned to 0.

OPERATIONAL CHARACTERISTICS:

Normal for Stand Alone Program

TIMING: There are two areas of time critical operations. The first is the actual digitizing process, the second is the transfer of data from the disk buffer to magnetic tape.

A. Digitizing

The maximum allowable digitizing rate (in Sigma 7 or wall clock time) is 100,000 data points per second. This rate assumes two data points per word are transferred. The only other consideration is the capacity of the disk. At present SAGPAD uses one 7232 disk unit which has a capacity of 1.5 million Sigma 7 words or 3.0 million data points if two data points per word are used. Therefore, the length of a single continuous burst must not exceed this.

B. Transfer to Magnetic Tape

The critical period here is the time between digitizing bursts. It must be long enough to allow data collected on the disk to be transferred to magnetic tape. This is dependent on two things. The number of data points in the preceding burst and the magnetic tape record size. Two things must be calculated. First the time to read the data from the disk, and second, the time to write the data to tape.

As an example, assume that a burst contains 200,000 data points, collected as two points per 32-bit Sigma 7 word. This represents 100,000 Sigma 7 words or 400,000 Sigma 7 bytes. Assume also that a magnetic tape record size of 2048 bytes is specified. This size will also be used for disk reads. For each disk access, the maximum latency time is .034 seconds and the transfer rate is 364,000 bytes per second. Therefore the maximum time required to read the data from the disk is:

$$T_D = [\frac{400,000}{2048} X .034] + \frac{400,000}{364,000} = 7.74 \text{ seconds.}$$

To calculate the time required to write the data to magnetic tape assume an inter-record delay time of .010 seconds per record and a transfer rate of 60,000 bytes per second. Therefore,

$$T_T = [\frac{400,000}{2048} X .010] + \frac{400,000}{60,000} = 8.63 \text{ seconds}$$

Therefore total transfer time (worst case) is 16.37 seconds, Sigma 7 time and the user must allow at least this between bursts.

Remember that these are wallclock times and that shot specifications are given in hydrophone time. If the play-back rate is 10 to 1, this means that the specified burst interval must be greater than 10 X 16.37 plus burst length or 163.7 seconds plus burst length.

It is evident from the example that disk latency or seek times and inter-record times on tape account for much of the total time. Therefore, one can cut the time considerably by using records which are as long as practicable. For example, if the record size in the foregoing illustration were doubled from 2048 bytes to 4096 bytes, the time would be decreased from 16.37 seconds to 12.06 seconds.

ERRORS & DIAGNOSTICS:

The general procedure with error and diagnostic messages is to output a full description on the line printer and to either repeat or output a shorter version on the teletype. In addition, the teletype will give directions for recovery, if recovery is possible. The following list will give both the line printer (LP) and teletype (TTY) message for each error or diagnostic.

A. Parameter Input and Initialization

During parameter input and initialization, the following messages may appear.

1. (LP) ERROR IN LAST CARD
   (TTY) PAR. CARD ERR., HIT CONSOLE INTERRUPT TO CONTINUE

   The program will enter the wait state. The error may be a non-recognizable key or an error in the parameter value. To recover, correct the bad card, place it in front of the unread portion of the deck and push the console interrupt.

2. (LP) MUX GAIN ILLEGAL
   (TTY) PAR. VAL. ERR. HIT C.I. TO REREAD PARAMETER CARDS

   The digitizer gain value (key - GAIN) must be one of four values, 1.25, 2.5, 5.0, or 10.0. This message occurs after the :SHOTS card is read, but before any shot cards are processed. To recover, correct the offending parameter card, retrieve the :SHOTS card from the output hopper and

place the corrected parameter card and the :SHOTS card (in that order) in front of the unread deck. Hit the console interrupt to continue.

3. (LP) TAPE REC. SIZE MUST BE MULTIPLE OF 1024 BYTES - MAX. = 16384.
   (TTY) same as for error A-2

   Specific tape record size is incorrect. Recovery is the same as for error A-2

4. (TTY) READY TAPE A80

   SAGPAD is ready to write header record, but tape is not ready. Ready tape unit. Message will repeat every five seconds until unit is readied.

5. (LP) ERROR LAST SHOT CARD
   (TTY) SPEC. ERR., CORRECT AND HIT CON. INT. TO REREAD

   There is an error in the last shot specification card. Either the values are illegal, there is a time inconsistancy within the card, or there is a time overlap with the last card. To recover, correct the card, place it at the head of the unread input deck and hit the console interrupt to continue reading.

6. (LP) TOO MANY SHOT SPECS - LIMIT = 100
   (TTY) SHOT OVERFLOW, CORRECT AND HIT CON. INT. TO REREAD

   To recover, the shot deck must be reduced to 100 or less and the whole shot deck, including the :SHOT card, must be placed in the input stack. Hit the console interrupt to reread.

B. Digitizing

The following error messages may be output during the digitizing phase. Each of the messages will be preceded by line printer output giving the sequence number of the shot specification card currently being processed and internal (hydrophone) time information consisting of last time code value read, if any, and the value of the internal clock.

1. (LP & TTY) RUN ABORTED - TOO MANY TIME OVERRUNS

   A time overrun occurs whenever the interval between digitizing bursts is too short to allow data transfer to magnetic tape (see TIMING section). This causes SAGPAD to skip digitizing the next schedule burst. The maximum number of these time overruns allowed is set by the user via parameter OVRX. When this number is exceeded the run is aborted and SAGPAD readies itself for the next run. No recovery of the aborted run is possible. An end-of-file is written on the output tape.

2. (LP & TTY) RUN ABORTED - TOO MANY TIME CODE INTERRUPT FAILURES

If time code option is used (TCDE=1), SAGPAD expects a time code read out to be available once a minute (hydrophone time). Whenever it has time before the next burst is due, it attempts to read the time code channel. If an interrupt is not received within TCWX seconds (hydrophone time) after issuing a read command, it is counted as a time code failure. When the number of failures exceeds TCMX, the run is aborted in the same manner as for error B-1.

3. (LP & TTY) RUN ABORTED - RAD OVERFLOW

During actual digitizing SAGPAD double buffers data from core to disk. If, for any reason, it cannot start disk I/O during the period, it aborts with the above message. The cause of the failure may either be due to hardware failure in the Sigma 7 or it may be due to a burst length which exceeds the capacity of the disk (see TIMING section). Abort procedure is the same as for error B-1.

C. Failure with no error message

Because of the rapid digitizing rate (up to 100 KC), SAGPAD uses a Read Direct loop with no interrupt when reading digitized data. If there is a failure in the A/D unit or in the Sigma 7 direct I/O logic, the program will hang on the Read Direct instruction. There is no way, given the timing constraints, that the program can diagnose this problem. In order to aid the user in diagnosing this situation, the location of the Read Direct instruction is declared an external definition, with the tag READ. Thus, its core location will be contained in the load map which the Stand Alone Loader outputs on the line printer when it loads SAGPAD. The user should note the location. If the program hangs at this core address, he can then be certain that there is a Read Direct failure and that the problem most likely lies in the A/D digitizer.

PROGRAMMER: G.H. Power

ORIGINATOR: C.D. Tollios, ACODAC project

DATE: October 6, 1972

REFERENCES:

1. Stand Alone Systems Operations Manual for Sigma 5/7 Computers, Xerox publication number 901053B

2. Multiplexer-Digitizer Model MD51 Technical Manual, Xerox publication number 980312.

APPENDIX E

PRINCIPALS OF RMS MEASUREMENTS USING THE GENERAL RADIO 1926 ANALYZER (RMS DETECTOR)

A voltage wave form v(t), has a mean value $\overline{v}(t)$

$$\overline{v}(t) = \frac{1}{T}\int_0^T vtdt \tag{1}$$

The mean square value of v(t), taken about its mean, is called the variance, σ^2

$$\sigma^2 = \frac{1}{T}\int_0^T [v(t) - \overline{v}(t)]^2 dt \tag{2}$$

The square root of σ^2 is called the root-mean-square, or rms, value of v(t). (Note that σ^2 excludes dc.)

If we assume that $\overline{v}(t) = 0$, equation (2) reduces to

$$\sigma^2 = \frac{1}{T}\int_0^t [v(t)]^2 dt \tag{3}$$

and the rms value becomes

$$\sigma = \sqrt{\frac{1}{T}\int_0^t [v(t)]^2 dt} \tag{4}$$

When the data are discrete, the voltage v(t) is known only at discrete instants of time (t). The integral of equation (4) reduces to a summation and we have

$$\sigma = \sqrt{\frac{1}{N}\sum_{i=1}^{N} [v(t)]^2} \tag{5}$$

when N equals the number of samples.

The rms value, therefore is equal to the square root of the sum of the squares of $v(t_i)$ divided by the number of samples.

The 1926 Detector measures the value $v(t_i)$ with a 1-mv reference level. The rms level in db above 1 mv is therefore

$$\text{rms} = 20 \log_{10}\left(\frac{\sigma}{\sigma_o}\right) \text{db}$$

$$= 10 \log_{10}\left(\frac{\sigma}{\sigma_o}\right)^2 \text{db} \tag{6}$$

Combining equations 5 and 6

$$\text{rms} = 10 \log_{10}\{\frac{1}{N} \sum_{i=1}^{N} [\frac{v(t_i)}{v_o}]^2\}\text{db} \tag{7}$$

σ_o and v_o are reference levels.

Equation 7 is computed by the 1926 Detector and avoids the square root operation by using $10 \log_{10}$. Also N is always a binary number so that division by N is simply a binary point shift.

Decibel conversion

All output measurements of the 1926 Analyzer are in db unit. During the output phase of operation, the digital memory has the mean square measurement values (called the variance, σ^2) in storage, which are converted to rms in db, using the operations described by equation 6:

$$\text{rms} = 10 \log_{10}(\frac{\sigma}{\sigma_o})^2\text{db} \tag{8}$$

The memory format is floating point binary, so that σ^2 is a number stored in two parts, a mantissa, and a binary exponent, E;

$$\sigma^2 = m.2^E$$

Substituting (8) into (6)

$$\text{rms} = 10 \log_{10} m + 10E \log_{10} 2 \text{ db} - 10 \log_{10} \sigma_o$$

$$= 10 \log_{10} m + 3.01E \text{ db} - 10 \log_{10} \sigma_o \tag{9}$$

The $(10 \log_{10} m)$ term of equation 9 is a component that lies between 0 and 3 db, because m is a number that lies between 1.0 and 2.0. The second half of equation 9 is a component that lies between 0 and 60.2 db because E is an integer number that lies between 0 and 20. The third term is a constant that accounts for the reference level.

The output data is quantized in 0.25 db steps, making a total of 240 possible output steps for the dynamic range of 60 db. Between 0 and 3 db there are 12 steps (the possible outcomes of the output computation using the mantissa, m).

For outputs between 3 and 6 db, the exponent E equals 1 and again 12 steps are needed. This process repeats up to a maximum of 60 db, where E = 10 (actually for 60.2 db).

Using 12 steps for the mantissa and 20 for the exponent, therefore a total of 240 steps are possible, using a very simple computational algorithm.

The (3.01E) term of equation 9 is not a whole number, but the above discussion assumes it to be. In the actual computation this fractional difference is ignored.

Computation of the first half of equation 9 is achieved with a fixed conversion matrix. It accepts a 5-bit input (32 possible inputs) and has 13 possible outputs (12 steps + 0).

DEPARTMENT OF THE NAVY
OFFICE OF NAVAL RESEARCH
875 NORTH RANDOLPH STREET
SUITE 1425
ARLINGTON VA 22203-1995

IN REPLY REFER TO:

5510/1
Ser 321OA/011/06
31 Jan 06

MEMORANDUM FOR DISTRIBUTION LIST

Subj: DECLASSIFICATION OF LONG RANGE ACOUSTIC PROPAGATION PROJECT (LRAPP) DOCUMENTS

Ref: (a) SECNAVINST 5510.36

Encl: (1) List of DECLASSIFIED LRAPP Documents

1. In accordance with reference (a), a declassification review has been conducted on a number of classified LRAPP documents.

2. The LRAPP documents listed in enclosure (1) have been downgraded to UNCLASSIFIED and have been approved for public release. These documents should be remarked as follows:

   Classification changed to UNCLASSIFIED by authority of the Chief of Naval Operations (N772) letter N772A/6U875630, 20 January 2006.

   DISTRIBUTION STATEMENT A: Approved for Public Release; Distribution is unlimited.

3. Questions may be directed to the undersigned on (703) 696-4619, DSN 426-4619.

BRIAN LINK
By direction

Subj: DECLASSIFICATION OF LONG RANGE ACOUSTIC PROPAGATION PROJECT (LRAPP) DOCUMENTS

DISTRIBUTION LIST:

NAVOCEANO (Code N121LC – Jaime Ratliff)
NRL Washington (Code 5596.3 – Mary Templeman)
PEO LMW Det San Diego (PMS 181)
DTIC-OCQ (Larry Downing)
ARL, U of Texas
Blue Sea Corporation (Dr.Roy Gaul)
ONR 32B (CAPT Paul Stewart)
ONR 321OA (Dr. Ellen Livingston)
APL, U of Washington
APL, Johns Hopkins University
ARL, Penn State University
MPL of Scripps Institution of Oceanography
WHOI
NAVSEA
NAVAIR
NUWC
SAIC

Declassified LRAPP Documents

Report Number	Personal Author	Title	Publication Source (Originator)	Pub. Date	Current Availability	Class.
WHOI73-59	Tollios, C. D.	THE ACODAC DATA PROCESSING SYSTEM	Woods Hole Oceanographic Institution	730901	AD0773114; ND	U
Unavailable	Russell, J. J.	DOCUMENTATION FOR COMPUTER PROGRAM SUMMARY: A COMPUTER PROGRAM TO SUMMARIZE SOUND SPEED PROFILE DATA	Naval Undersea Center	731001	AD0918907	U
MC001Vol2	Unavailable	CHURCH ANCHOR DATA ANALYSIS PLAN VOL 2 (U)	Maury Center for Ocean Science	731001	ND	U
73-9M7-VERAY-R2	Jones, C. H.	LRAPP VERTICAL ARRAY- PHASE III	Westinghouse Research Laboratories	731105	ADA001130; ND	U
55	Weinstein, M. S., et al.	SUS QUALITY ASSESSMENT	Underwater Systems, Inc.	731201	ND AD 785875	U
ARL-TM-73-42	Mitchell, S. K., et al.	QUALITY CONTROL ANALYSIS OF SUS PROCESSING FROM ACODAC DATA	University of Texas, Applied Research Laboratories	731220	ND ADB 000293	U
Unavailable	Daubin, S. C.	CHURCH GABBRO TECHNICAL NOTE: CONTINUOUS CURRENT PROFILES	University of Miami, Rosenstiel School of Marine and Atmospheric Science	740101	AD0775333	U
Unavailable	Bitterman, D. S.	ACODAC AMBIENT NOISE SYSTEM	Woods Hole Oceanographic Institution	740101	ADA009440	U
ONR MC-002 VOL. 2; XONICS 885	Unavailable	LONG RANGE ACOUSTIC PROPAGATION PROJECT (LRAPP). SQUARE DEAL DATA ANALYSIS PLAN (U) VOLUME 2 - ANNEXES	Maury Center for Ocean Science; Xonics, Inc.	740101	ND	U
ARL-TM-74-12	Groman, R. O., et al.	SPECIAL HARDWARE FOR ARL ANALYSIS OF ACODAC DATA	University of Texas, Applied Research Laboratories	740314	ADA000295; ND	U
Unavailable	Unavailable	ASEPS NEAR FIELD TRANSMISSION LOSS MODIFICATION, P-2205	Ocean Data Systems, Inc.	740401	ADA096583	U
Report 001; MSAG-1	Unavailable	MEASUREMENT SYSTEMS ADVISORY GROUP	Office of Naval Research	740401	ADA096586; ND	U
ACR-196	Gregory, J. B.	PROJECT PACIFIC SEA SPIDER, TECHNOLOGY USED IN DEVELOPING A DEEP-OCEAN ULTRASTABLE PLATFORM	Office of Naval Research	740412	AD0529945; ND	U
Unavailable	Gottwald, J. T.	ANNUAL REPORT FOR 1 MAY 1973 - 30 APRIL 1974	Tracor, Inc.	740524	AD0920210	U
Unavailable	Unavailable	ACOUSTIC MODEL SUPPORT ACTIVITIES, P-2220	Ocean Data Systems, Inc.	740530	ADA096584	U
HCI-CMC-18540	Daubin, S. C.	TRANSMISSION LOSS OF LOW FREQUENCY UNDERWATER SOUND IN THE CAYMAN TROUGH (CHURCH GABBRO TECHNICAL NOTE)	University of Miami, Rosenstiel School of Marine and Atmospheric Science	740601	ADC000424; ND	U
HCI-CMC-18343	Daubin, S. C.	AMBIENT NOISE IN THE NORTHWEST CARIBBEAN SEA (CHURCH GABBRO TECHNICAL NOTE) (U)	University of Miami, Rosenstiel School of Marine and Atmospheric Science	740601	ND	U
Unavailable	Barnes, A., et al.	DISCRETE SHIPPING MODEL	Planning Systems, Inc.	740604	ND	U