AD-773 022

U. S. ARMY HELICOPTER HYDRAULIC SYSTEM RELIABILITY AND MAINTAINABILITY INVESTIGATION. VOLUME I. DOCUMENT DEFICIENCY ANALYSIS

James L. Huffman

Systems Associates, Incorporated

Prepared for:

Army Air Mobility Research and Development Laboratory

September 1973

DISTRIBUTED BY:

NTIS

National Technical Information Service
U. S. DEPARTMENT OF COMMERCE
5285 Port Royal Road, Springfield Va. 22151

UNCLASSIFIED
Security Classification

DOCUMENT CONTROL DATA - R & D

(Security classification of title, body of abstract and indexing annotation must be entered when the overall report is classified)

1. ORIGINATING ACTIVITY *(Corporate author)* Systems Associates, Inc. 444 West Ocean Boulevard Long Beach, California	2a. REPORT SECURITY CLASSIFICATION UNCLASSIFIED 2b. GROUP N/A

3. REPORT TITLE
U.S. ARMY HELICOPTER HYDRAULIC SYSTEM RELIABILITY AND MAINTAINABILITY INVESTIGATION, VOLUME I, DOCUMENT DEFICIENCY ANALYSIS

4. DESCRIPTIVE NOTES *(Type of report and inclusive dates)*
Final Report

5. AUTHOR(S) *(First name, middle initial, last name)*
James L. Huffman

6. REPORT DATE September 1973	7a. TOTAL NO. OF PAGES 217	7b. NO. OF REFS 227
8a. CONTRACT OR GRANT NO. DAAJ02-73-C-0013 b. PROJECT NO. Task 1F 162205A11903 c. d.	9a. ORIGINATOR'S REPORT NUMBER(S) USAAMRDL Technical Report 73-63A 9b. OTHER REPORT NO(S) *(Any other numbers that may be assigned this report)* SAI Report 73-005	

10. DISTRIBUTION STATEMENT
Approved for public release; distribution unlimited.

11. SUPPLEMENTARY NOTES Volume I of a two-volume report	12. SPONSORING MILITARY ACTIVITY Eustis Directorate U.S. Army Air Mobility R&D Laboratory Fort Eustis, Virginia

13. ABSTRACT

This investigation was performed in order to identify deficiencies in military specifications and standards concerning hydraulic systems in U.S. Army helicopters. The three areas of concern that impact on helicopter reliability and maintainability are: design requirements, qualification test requirements, procedures and practices, and quality assurance provisions and requirements.

The helicopters selected are the AH-1G Cobra, UH-1D/H Iroquois, OH-6A Cayuse, CH-47A Chinook, and the CH-54A Tarhe. Schematics of each model helicopter hydraulic system were analyzed and a composite schematic was constructed to represent all subsystems, equipment and component parts of all models. This composite schematic provided a baseline system on which to build a hydraulic system documentation tree.

Documents were collected from DOD sources, supplemented by information from manufacturers' drawings, and Army maintenance manuals. They were analyzed for application to the documentation tree and whether they required major revision, minor revision, deletion, or rewrite. Areas which lacked design documentation were identified for new documentation requirements.

Recommendations for new documents and for improvements are identified and supplementary information to deficient documents is provided in Volume II of this report.

DD FORM 1 NOV 65 1473 REPLACES DD FORM 1473, 1 JAN 64, WHICH IS OBSOLETE FOR ARMY USE.

UNCLASSIFIED
Security Classification

Reproduced by
NATIONAL TECHNICAL
INFORMATION SERVICE
U.S. Department of Commerce
Springfield VA 22151

UNCLASSIFIED

Security Classification

14 KEY WORDS	LINK A ROLE	LINK A WT	LINK B ROLE	LINK B WT	LINK C ROLE	LINK C WT
Hydraulic System						
Document Alternative Selection						
Operational Parameter						
Mission Requirements						
Data Collection						
Reliability Requirements						
Maintainability Requirements						
Document Deficiencies						
Documentation Tree						
Design Requirements						
Qualification Testing						
Environmental Conditions						
Interchangeability						
Product Identification						
Workmanship						
Safety						
Standard Components						
Electromagnetic Interference						
Failures and Retests						
Quality Assurance						
Human Engineering						

1a

UNCLASSIFIED

Security Classification

DISCLAIMERS

The findings in this report are not to be construed as an official Department of the Army position unless so designated by other authorized documents.

When Government drawings, specifications, or other data are used for any purpose other than in connection with a definitely related Government procurement operation, the United States Government thereby incurs no responsibility nor any obligation whatsoever; and the fact that the Government may have formulated, furnished, or in any way supplied the said drawings, specifications, or other data is not to be regarded by implication or otherwise as in any manner licensing the holder or any other person or corporation, or conveying any rights or permission, to manufacture, use, or sell any patented invention that may in any way be related thereto.

Trade names cited in this report do not constitute an official endorsement or approval of the use of such commercial hardware or software.

DISPOSITION INSTRUCTIONS

Destroy this report when no longer needed. Do not return it to the originator.

ACCESSION for
NTIS
DDC
UNANNOUNCED
JUSTIFICATION
A

DEPARTMENT OF THE ARMY
U. S. ARMY AIR MOBILITY RESEARCH & DEVELOPMENT LABORATORY
EUSTIS DIRECTORATE
FORT EUSTIS, VIRGINIA 23604

This report, presented in two volumes, was prepared by Systems Associates, Incorporated, under terms of Contract DAAJ02-73-C-0013. The investigation was based on the conclusions of USAAMRDL Technical Reports 73-29, "U. S. Army Helicopter Hydraulic Servocylinder Reliability and Maintainability Investigation," and 73-35, "U. S. Army Helicopter Rod End Bearing Reliability and Maintainability Investigation." Those studies concluded that document deficiencies were contributing significantly to poor reliability and maintainability (R&M) characteristics of U. S. Army helicopter hydraulic servocylinders and rod end bearings.

This report presents the results of an effort to identify and recommend corrections to deficient documents used to specify design and test requirements and quality assurance provisions for hydraulic systems of Army aircraft. However, hydraulic system complexity and diversity precluded, from a cost and time standpoint, an in-depth assessment of failure and maintenance data to support the recommended document changes. Rather, a subjective approach was used which was based primarily on experience, available reports, and analyses. Therefore, this report should be viewed in that context and should be used accordingly.

This volume contains the methodology used to identify adequate, nonexistent, or inadequate documents relating to Army aircraft hydraulic systems and components. It provides a complete description of the results of the research, including guidance concerning the applicability and adequacy of hydraulic component and system requirements documents.

Volume II contains recommended changes to military specifications, standards, and handbooks that can be used to help alleviate the recurrence of Army aircraft hydraulic system related R&M problems that may be a result of inadequate requirements documents. Pending appropriate changes to those documents, it is suggested that this report be used as a supplementary handbook, design guide, or attachment to system specifications by procuring agencies in the development of hydraulic systems of future Army aircraft.

Both volumes of this report are considered to be technically sound.

The Project Engineer for this contract was Donald R. Artis, Jr., of the Reliability and Subsystems Technical Area, Military Operations Technology Division, Eustis Directorate.

Task 1F162205A11903
Contract DAAJ02-73-C-0013
USAAMRDL Technical Report 73-63A

September 1973

U.S. ARMY HELICOPTER HYDRAULIC SYSTEM RELIABILITY AND MAINTAINABILITY INVESTIGATION

VOLUME I

DOCUMENT DEFICIENCY ANALYSIS

Final Report

Systems Associates, Inc. Report 73-005

By

James L. Huffman

Prepared by

Systems Associates, Inc.
Long Beach, California

for

EUSTIS DIRECTORATE
U.S. ARMY
AIR MOBILITY RESEARCH AND DEVELOPMENT LABORATORY
FORT EUSTIS, VIRGINIA

Approved for public release; distribution unlimited.

SUMMARY

This investigation was performed to identify deficiencies in U.S. Army helicopter hydraulic system documentation. The scope of the effort was constrained to documentation pertinent to three classes of requirements, which impact the reliability and maintainability of Army helicopters: (1) design requirements; (2) qualification test requirements, procedures, and practices; and (3) quality assurance requirements and provisions.

The results of this investigation are contained in two volumes: Volume I - Document Deficiency Analysis, Volume II - Supplemental Design Guide. Figure 1 presents an overview of the total effort and illustrates the allocation of the various tasks into Volumes I and II.

The first major task was to analyze the hydraulic systems contained in the current inventory of U.S. Army helicopters. Four models were selected as representative of the total family of helicopters: AH-1G, UH-1D/H, CH-47A, and CH-54A. The components that comprise the hydraulic system of these helicopters were then aggregated into three functional categories: control components, actuation components, and pressure components.

Within each of the three functional groups, component trees were then developed to establish the dominant/subordinate relationships among them. This was followed by the development of a baseline hydraulic system which represents a composite of the design philosophies of all the Army helicopter suppliers. The development of this baseline system, in turn, is the basis for the design of the structure of the documentation tree included in Volume II of this report.

The next major task was to collect and classify over 200 documents, of which 104 were found to be pertinent. The applicable documents were then tested against a structured set of deficiency criteria, and the potential impact on reliability and maintainability was assessed. Those documents containing deficiencies with a potential major impact were then reevaluated to identify the alternative actions that the Army might take to reduce the impact and then to select the best of the alternatives.

Of the total of 104 pertinent documents, about 67 percent were found to be deficient in the area of reliability requirements, 71 percent in maintainability requirements, 70 percent in reliability demonstration requirements and 68 percent in maintainability demonstration requirements.

To correct the identified deficiencies, 17 new documents should be developed to cover the identified gaps in existing documentation. In addition, 8 of the existing documents should be deleted. Of the remaining documents, 76 require major revisions, 3 were judged adequate, and 17 should require only minor revisions to remove existing deficiencies.

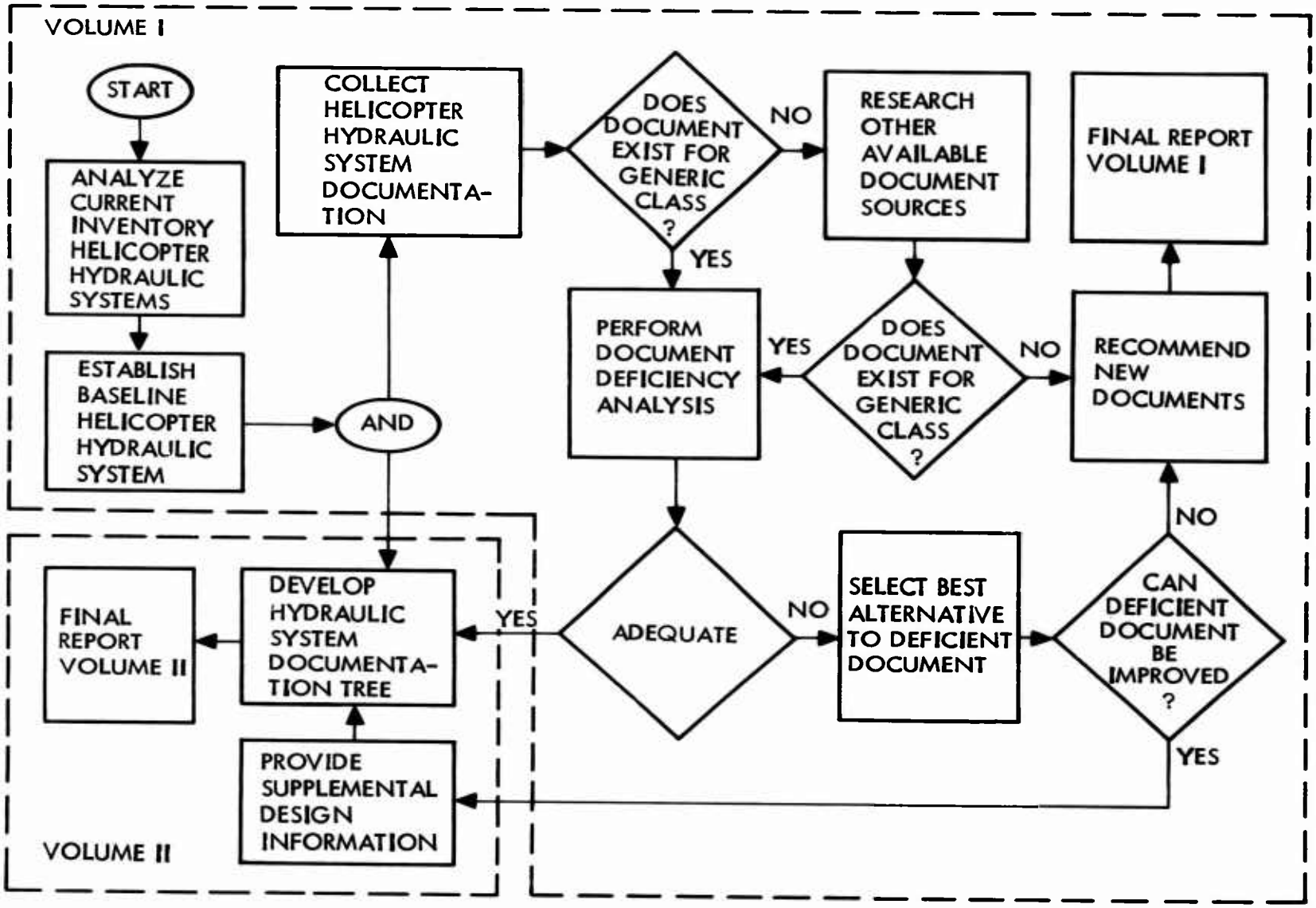

Figure 1. Hydraulic System Investigation Overview.

TABLE OF CONTENTS

	Page
SUMMARY	iii
LIST OF ILLUSTRATIONS	vii
LIST OF TABLES	ix
INTRODUCTION	1
DERIVATION OF BASELINE HYDRAULIC SYSTEM	2
DOCUMENTATION CLASSIFICATION	27
Helicopter Technical Manuals	27
Department of Defense Index of Specifications and Standards	41
Airframe Manufacturers and Component Suppliers	41
U.S. Army Aviation Systems Command	41
Manufacturers' Detailed Design Specifications	41
Documents Not Applicable	42
DOCUMENT DEFICIENCY ANALYSIS	44
Document Deficiency Criteria	44
Design Requirements	44
Qualification Test Requirements, Procedures and Practices	46
Quality Assurance Requirements and Provisions	47
Document Analysis	48
ALTERNATIVE SELECTION ANALYSIS	51
Evaluation Methodology	51
Alternative Evaluation and Selection	52
CONCLUSIONS	91
RECOMMENDATIONS	92
Supplemental Design Information	92
New Document Requirements	92
No Action Required	92

	Page
GLOSSARY	100
APPENDIXES	
I Documents Analyzed	102
Specifications	102
Military	102
Federal	113
Standards	115
Military	115
Military Handbooks	117
Army Technical Manuals	117
II Related Inapplicable Documents	119
III Related Reference Documents	121
IV Document Analysis	125
DISTRIBUTION	207

LIST OF ILLUSTRATIONS

Figure		Page
1	Hydraulic System Investigation Overview	iv
2	AH-1G Hydraulic System Schematic	4
3	AH-1G Hydraulic System Block Diagram Tree	5
4	UH-1D/H Hydraulic System Schematic	6
5	UH-1D/H Hydraulic System Block Diagram Tree	7
6	CH-47A Main Hydraulic System Schematic	9
7	CH-47A Utility Hydraulic (Engine Start) System Schematic	11
8	CH-47A Utility Hydraulic (Rotor Brake, Wheel Brake and Power Steering) System Schematic	13
9	CH-47A Utility Hydraulic (Rescue Hoist and Cargo Handling) System Schematic	15
10	CH-47A Utility Hydraulic (Cargo Hook) System Schematic	16
11	CH-47A Hydraulic System Block Diagram Tree	17
12	CH-54A Main Hydraulic System Schematic	19
13	CH-54A Utility Hydraulic System Schematic	21
14	CH-54A Cargo Hoist Hydraulic System	23
15	CH-54A Hydraulic System Block Diagram Tree	25
16	U.S. Army Helicopter Baseline Hydraulic System Block Diagram Tree	26
17	Hydraulic System Document Alternative Selection Analysis	54
18	Hydraulic Control Subsystem Document Alternative Selection Analysis	59
19	Hydraulic Servo Subsystem Document Alternative Selection Analysis	67

Figure		Page

20 Hydraulic Pressure Subsystem Document Alternative Selection Analysis 71

21 Hydraulic System Component Document Alternative Selection Analysis 79

22 Document Alternative Selection Comparison 90

23 Hydraulic System Document Deficiency Analysis 128

24 Hydraulic System Controls Document Deficiency Analysis 139

25 Hydraulic Servo Subsystem Document Deficiency Analysis 158

26 Hydraulic Pressure Subsystem Document Deficiency Analysis 165

27 Hydraulic System Component Document Deficiency Analysis 184

LIST OF TABLES

Table		Page
I	Representative Army Helicopters	2
II	Applicable Helicopter Technical Manuals	28
III	Hydraulic System Documentation	30
IV	Generic Component Types Without Applicable Military Specifications	43
V	Document Deficiency Matrix	50
VI	Helicopter Hydraulic System Classifications Devoid of Governing Documentation (Military Specifications) . .	94

INTRODUCTION

This investigation was performed in order to:

1. Determine the inherent hydraulic system documentation deficiencies that impact helicopter reliability and maintainability.

2. Improve deficient documents to reflect the U.S. Army helicopter operational environments.

The words "documents and documentation" will be used only when referring to military standards, specifications, or handbooks, U.S. Army technical manuals, and Federal Standards. Volume I of this report describes the various analytical activities that were performed with the primary intent of identifying the basic reliability and maintainability related document deficiencies relative to Army helicopter hydraulic systems. These activities included:

1. Analysis of current-inventory helicopter hydraulic system

2. Establishment of a baseline hydraulic system

3. Collection of hydraulic system documentation

4. Determination if applicable documentation existed for each hydraulic system generic classification based on descriptions of hydraulic (TM) 55-409, "Fundamentals of Aircraft Hydraulics," dated May 1971

5. Identification of other document sources, i.e., commercial and manufacturer, where no existing military documentation was available

6. Performance of document dificiency analysis on all identified documentation

7. Selection of best alternatives to deficient documents

8. Recommendations for new documents

Volume II of this report is a supplemental design guide (SDG). If promulgated, the SDG will assist the designer of hydraulic systems and components in improving the reliability, availability and maintainability of Army helicopters. The SDG contains a helicopter hydraulic system documentation tree which displays the interstitial relationships of these documents in the design of a hydraulic system.

DERIVATION OF BASELINE HYDRAULIC SYSTEM

One objective of this investigation has been to develop a supplemental design guide (SDG). When implemented, this guide will serve to augment existing hydraulic system documentation in order to ensure that the reliability and maintainability of future hydraulic systems will not be degraded due to documentation deficiencies. It should be noted that in this context, documentation deficiency means either inadequate or nonexistent documents.

In order to provide an SDG of maximum utility to the Army, the particular design philosophies of each of the existing helicopter suppliers must be considered. The baseline hydraulic system has been derived to satisfy this requirement. This baseline system is a composite design of all existing Army helicopter suppliers and therefore includes all of the generic types of components and functions represented by them.

The existing helicopter hydraulic systems used to develop the baseline system are shown in Table I.

TABLE I. REPRESENTATIVE ARMY HELICOPTERS

Designation	Popular Name	Manufacturer	Typical Mission Usage
AH-1G	Cobra	Bell Helicopter Company	Attack
UH-1D/H	Iroquois	Bell Helicopter Company	Utility
CH-47A	Chinook	Vertol Division - The Boeing Company	Cargo/Transport
CH-54A	Tarhe	Sikorsky Aircraft Division - United Aircraft Corporation	Cargo/Transport

In addition to the three manufacturers shown in Table I, the Hughes Tool Company supplies the OH-6A helicopter to the Army. Because the OH-6A has only a self-contained one-way-locking hydraulic actuator and not a complete hydraulic system, it was excluded from the derivation of the baseline system.

The next step in the baseline system derivation was to aggregate the hydraulic system components into functional categories. The categories selected were:

- Control Components – Those components whose function is to control one or more other components within the hydraulic systems.

- Actuation Components – Those components whose function is to transfer hydraulically boosted energy to one or more other components.

- Pressure Components – Those components whose function is to generate or to store hydraulic energy. Also included are components which connect to external hydraulic pressure and storage sources.

Figure 2 is the schematic of the AH-1G hydraulic system reproduced from TM 55-1520-221-20, dated 10 September 1971 which was used to categorize the hydraulic components into the functional graphs previously described. Following this aggregation, a component "tree" is developed wherein each of the three functional groups (control, actuation and pressure) is broken down into equipments and the components which comprise them. This tree format is a prerequisite to the development of the documentation tree wherein all pertinent documentation is ordered from the system down to the piece-part level. The AH-1G hydraulic system block diagram tree is illustrated in Figure 3.

In similar fashion, the UH-1D/H schematic reproduced from TM 55-1520-210-20, dated 7 May 1969 and block diagram tree are illustrated in Figures 4 and 5 respectively. The CH-47A schematic reproduced from TM 55-1520-209-20, dated May 1968 is presented in Figures 6 through 10 and its block diagram tree in Figure 11. Figures 12 through 14 illustrate the CH-54A schematic, reproduced from TM 55-1520-217-20, dated April 1969 while its block diagram tree is presented in Figure 15.

Upon completion of the four hydraulic system trees, a composite or baseline hydraulic system block diagram tree was developed. Generic classifications were used to identify the subsystems and components in this baseline system. These generic classifications are based on descriptions of hydraulic components and subsystems outlined in TM 55-409, "Fundamentals of Aircraft Hydraulics". This baseline hydraulic system tree, illustrated in Figure 16, was then used as the basis for the hydraulic system documentation tree presented in Volume II of this report.

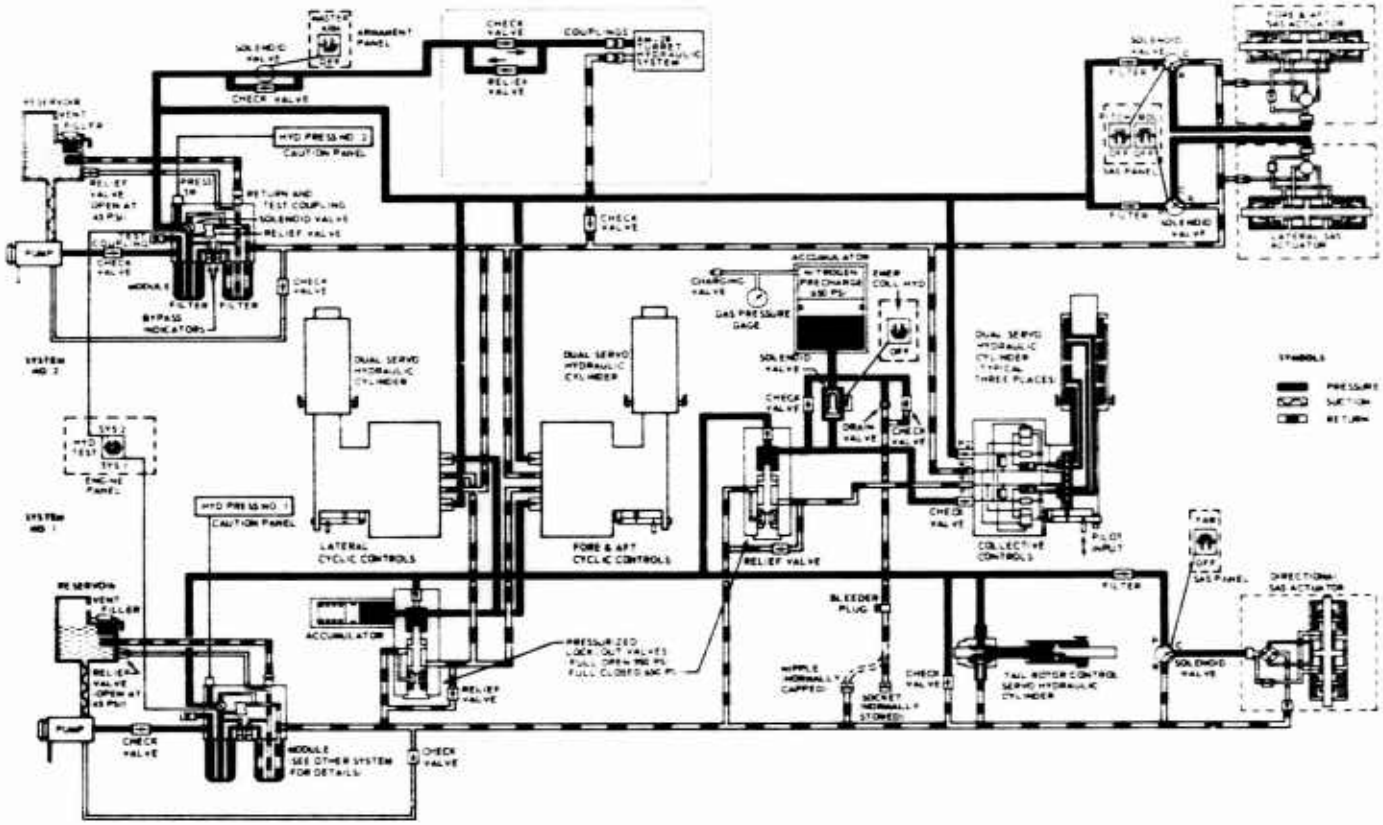

Figure 2. AH-1G Hydraulic System Schematic.

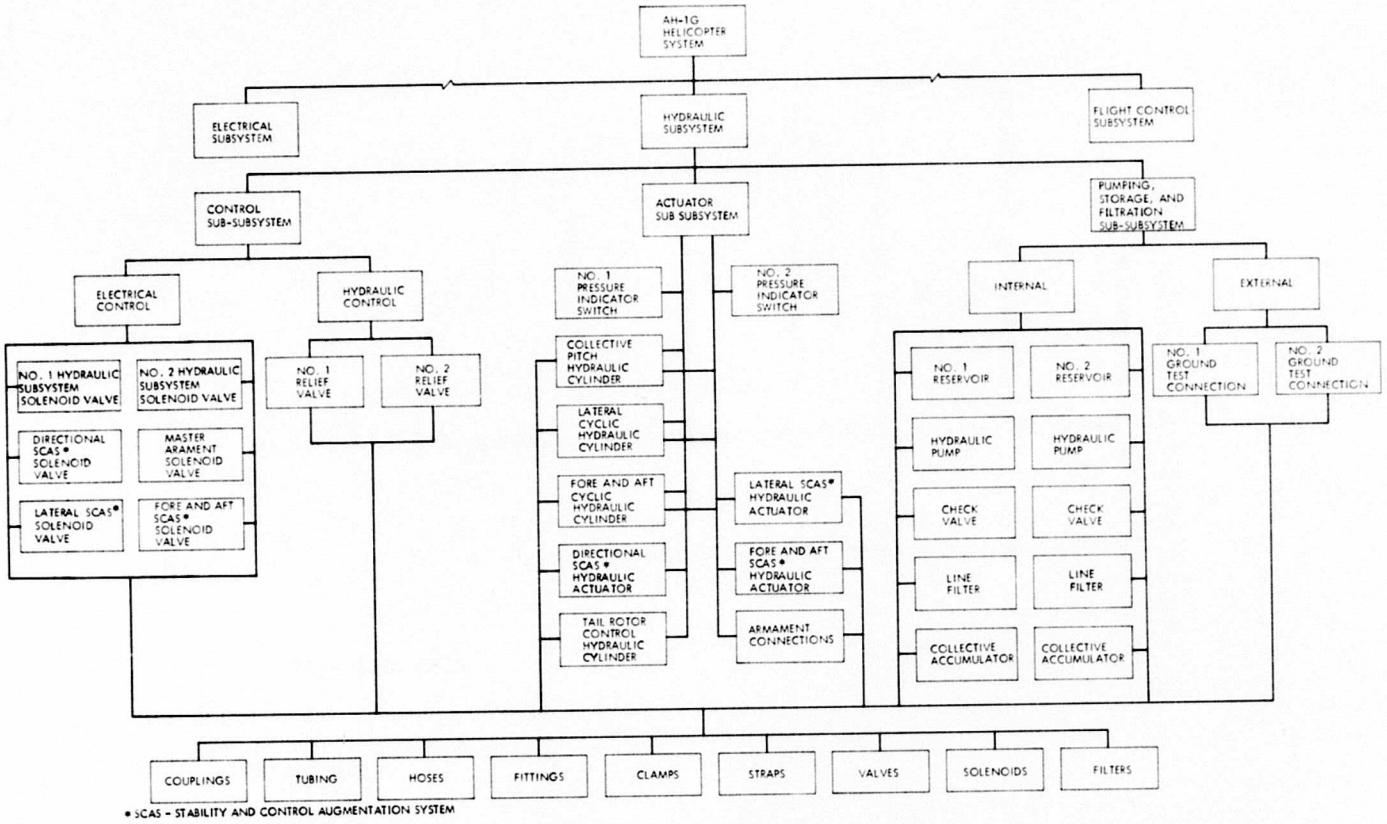

Figure 3. AH-1G Hydraulic System Block Diagram Tree.

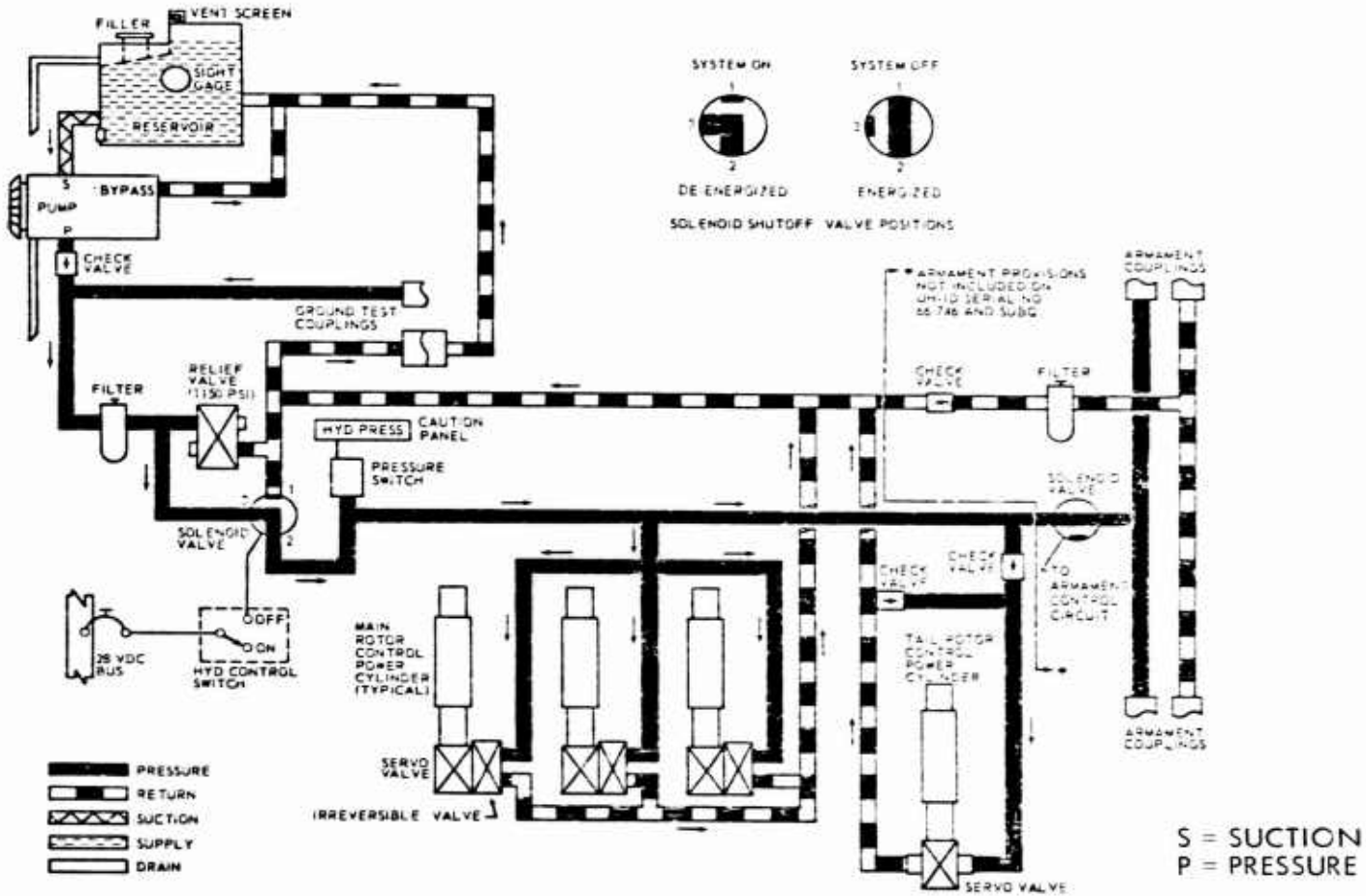

Figure 4. UH-1D/H Hydraulic System Schematic.

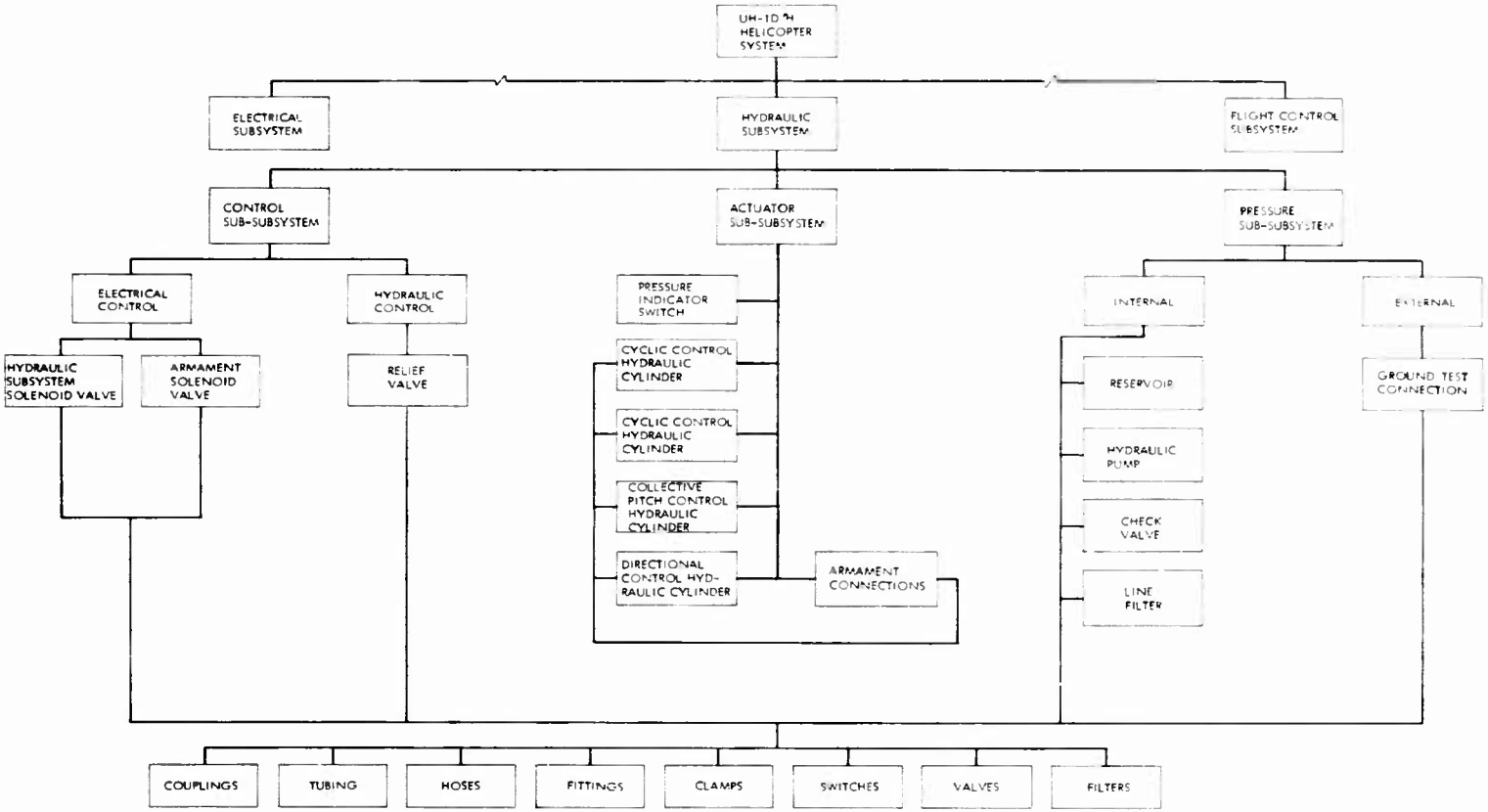

Figure 5. UH-1D/H Hydraulic System Block Diagram Tree.

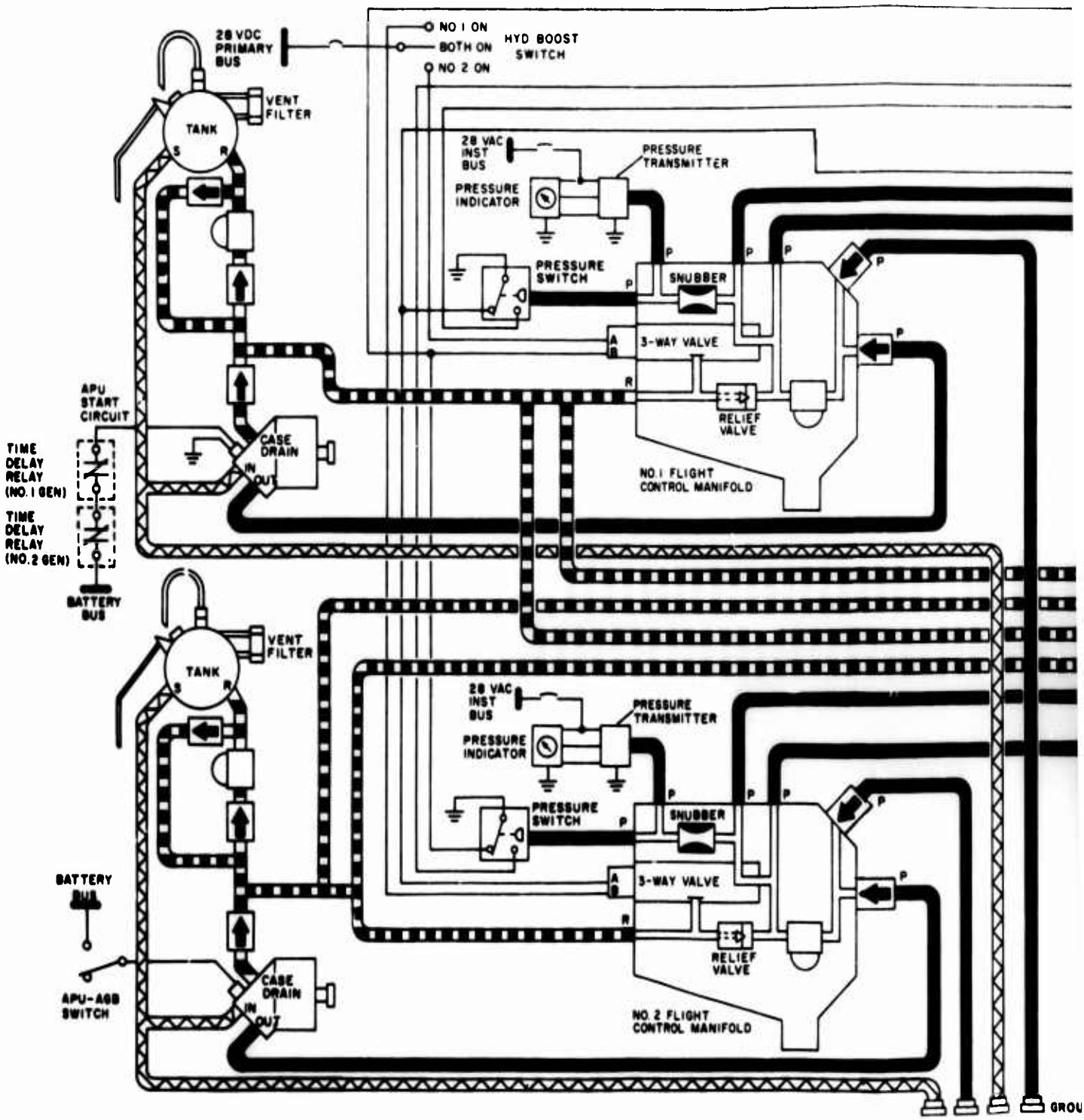

Figure 6. CH-47A Main Hydraulic System Schematic.

Preceding page blank

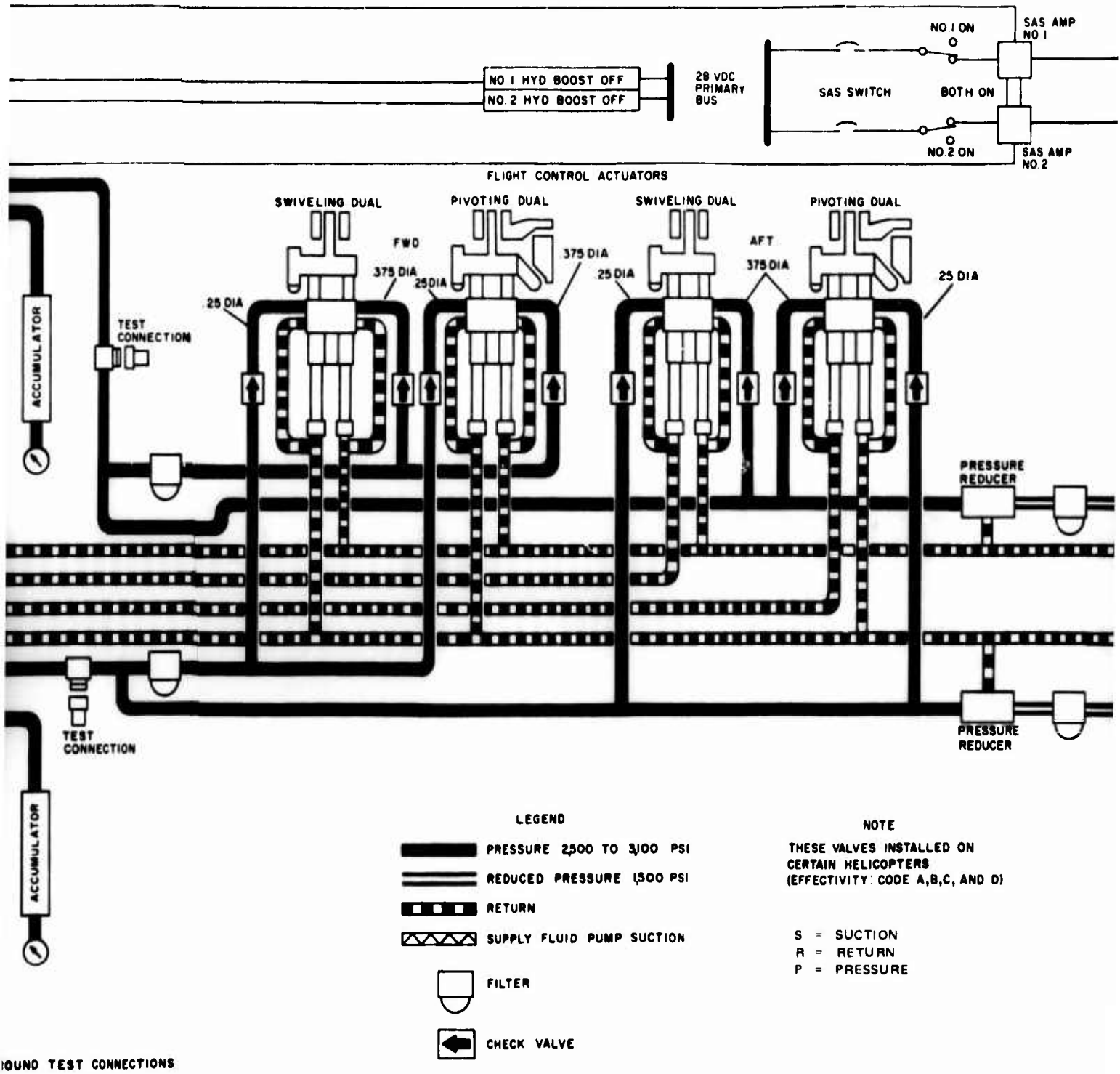

IOUND TEST CONNECTIONS

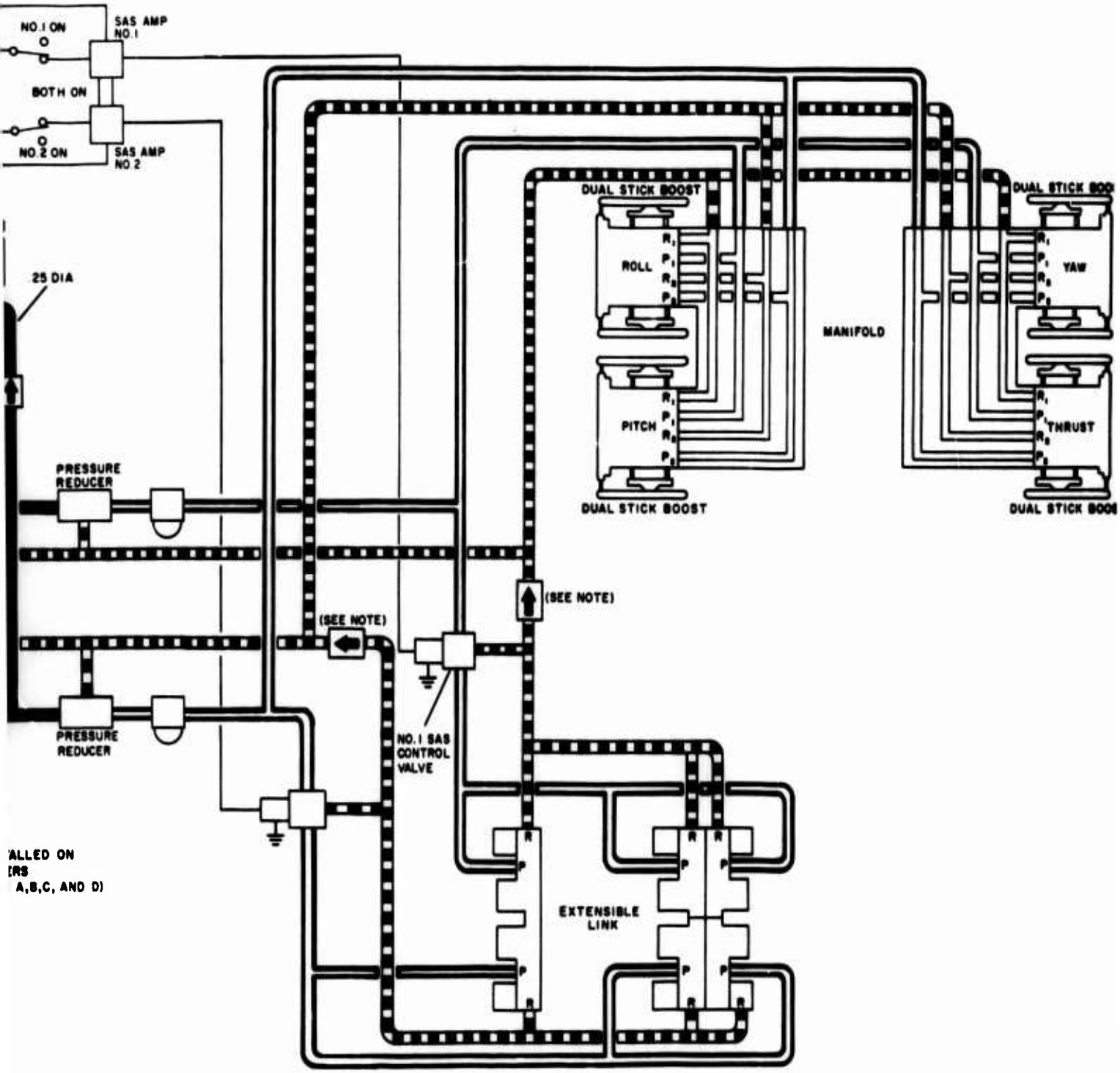
NO.1 ON
SAS AMP NO.1
BOTH ON
NO.2 ON
SAS AMP NO.2
25 DIA
PRESSURE REDUCER
PRESSURE REDUCER
DUAL STICK BOOST
ROLL
PITCH
DUAL STICK BOOST
MANIFOLD
YAW
THRUST
(SEE NOTE)
(SEE NOTE)
NO.1 SAS CONTROL VALVE
EXTENSIBLE LINK
ALLED ON
RS
A,B,C, AND D)

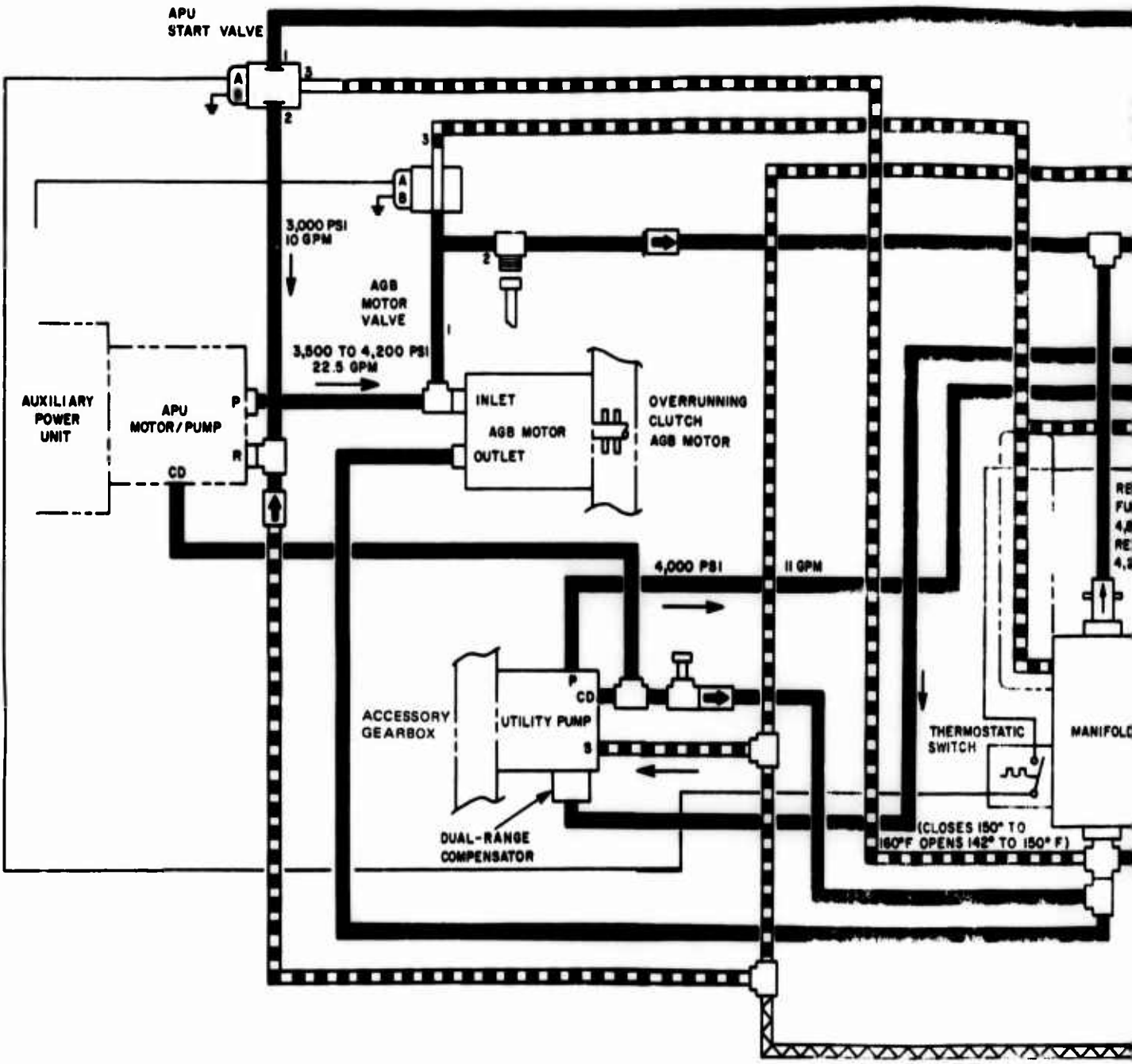

Figure 7. CH-47A Utility Hydraulic (Engine Start) System Schematic.

Preceding page blank

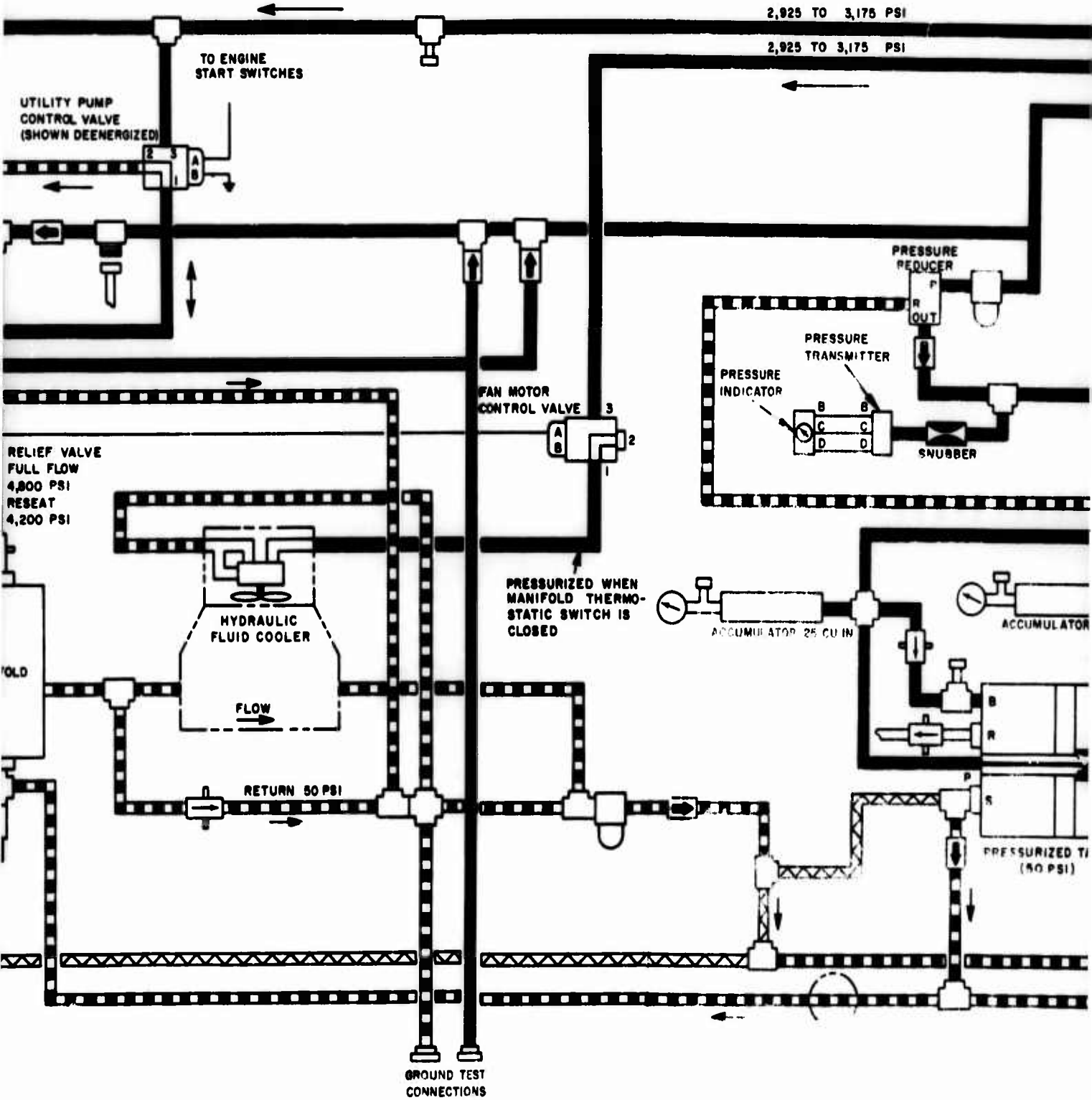
2,925 TO 3,175 PSI
2,925 TO 3,175 PSI
TO ENGINE START SWITCHES
UTILITY PUMP CONTROL VALVE (SHOWN DEENERGIZED)
PRESSURE REDUCER
P
R
OUT
PRESSURE TRANSMITTER
PRESSURE INDICATOR
SNUBBER
FAN MOTOR CONTROL VALVE
RELIEF VALVE FULL FLOW 4,800 PSI RESEAT 4,200 PSI
HYDRAULIC FLUID COOLER
FLOW
RETURN 50 PSI
PRESSURIZED WHEN MANIFOLD THERMO-STATIC SWITCH IS CLOSED
ACCUMULATOR 25 CU IN
ACCUMULATOR
PRESSURIZED T
(50 PSI)
GROUND TEST CONNECTIONS

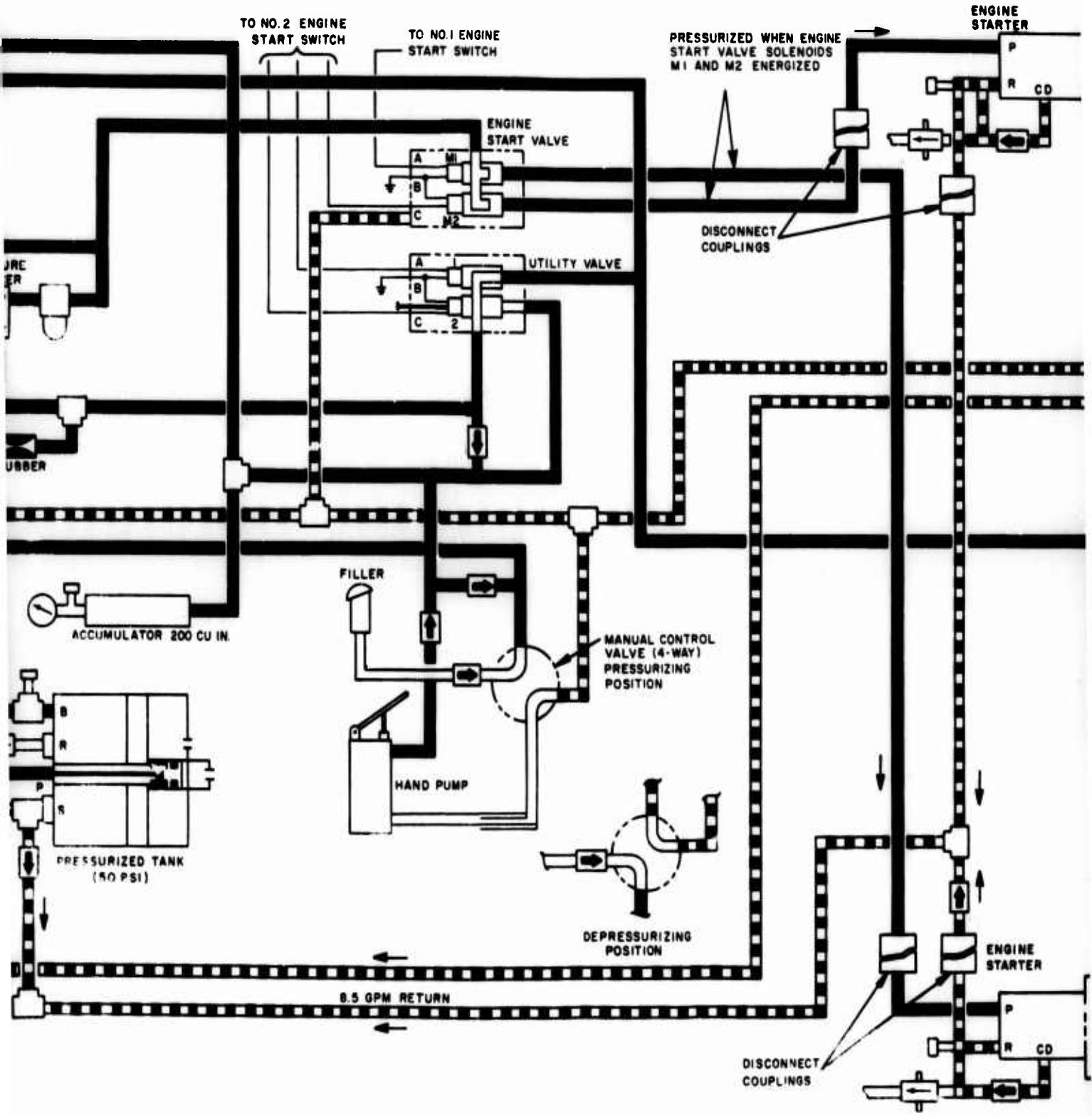
TO NO. 2 ENGINE START SWITCH
TO NO. 1 ENGINE START SWITCH
PRESSURIZED WHEN ENGINE START VALVE SOLENOIDS M1 AND M2 ENERGIZED
ENGINE STARTER
P
R
CD
ENGINE START VALVE
A
M1
B
C
M2
DISCONNECT COUPLINGS
UTILITY VALVE
A
B
C
2
FILLER
ACCUMULATOR 200 CU IN.
MANUAL CONTROL VALVE (4-WAY) PRESSURIZING POSITION
B
R
P
R
HAND PUMP
PRESSURIZED TANK (50 PSI)
DEPRESSURIZING POSITION
ENGINE STARTER
8.5 GPM RETURN
P
R
CD
DISCONNECT COUPLINGS

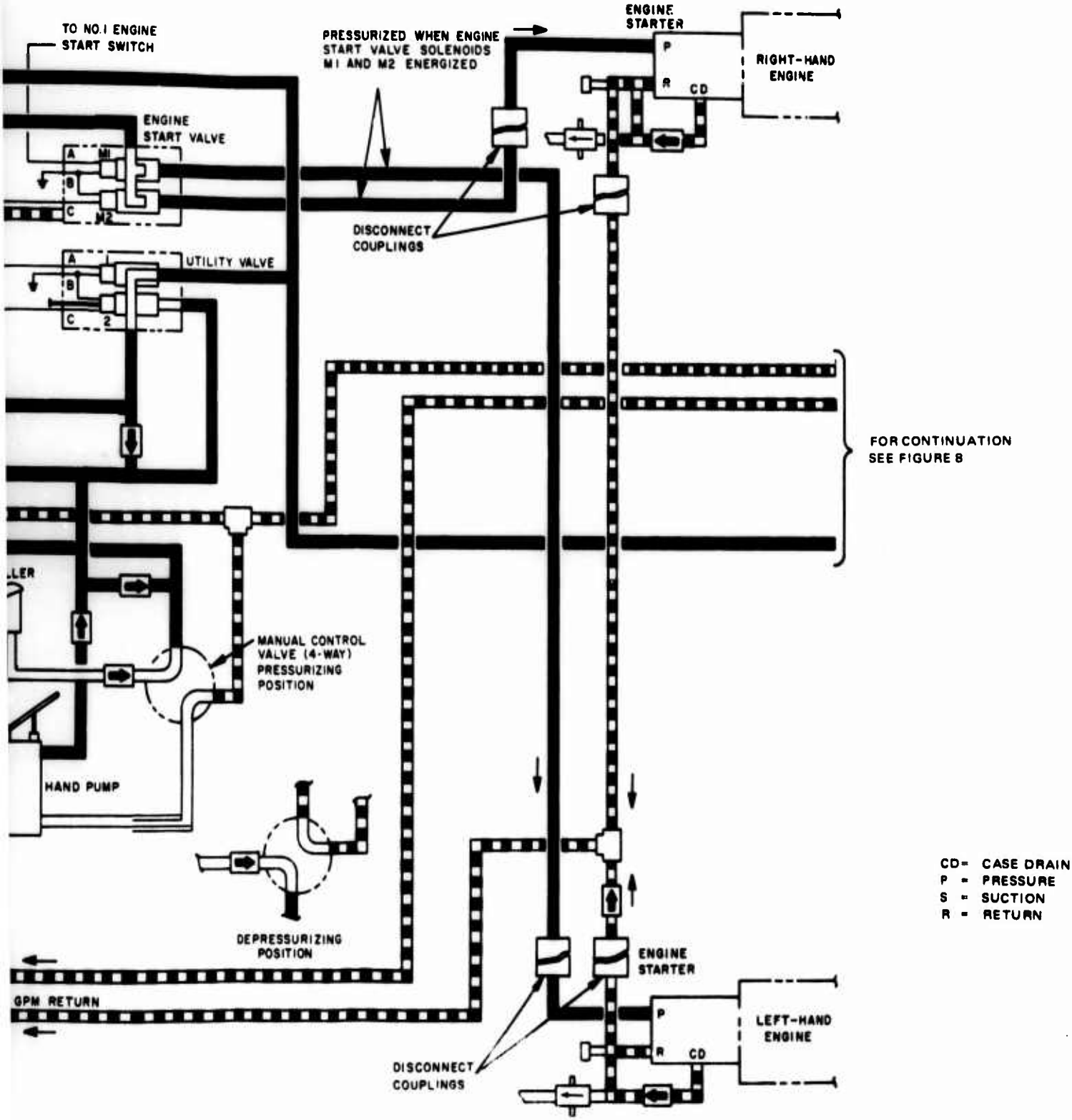
TO NO.1 ENGINE START SWITCH
PRESSURIZED WHEN ENGINE START VALVE SOLENOIDS M1 AND M2 ENERGIZED
ENGINE STARTER
P
R
CD
RIGHT-HAND ENGINE
ENGINE START VALVE
A
M1
B
C
M2
DISCONNECT COUPLINGS
UTILITY VALVE
A
B
C
2
FOR CONTINUATION SEE FIGURE 8
MANUAL CONTROL VALVE (4-WAY) PRESSURIZING POSITION
HAND PUMP
DEPRESSURIZING POSITION
GPM RETURN
ENGINE STARTER
P
R
CD
LEFT-HAND ENGINE
DISCONNECT COUPLINGS
CD= CASE DRAIN
P = PRESSURE
S = SUCTION
R = RETURN

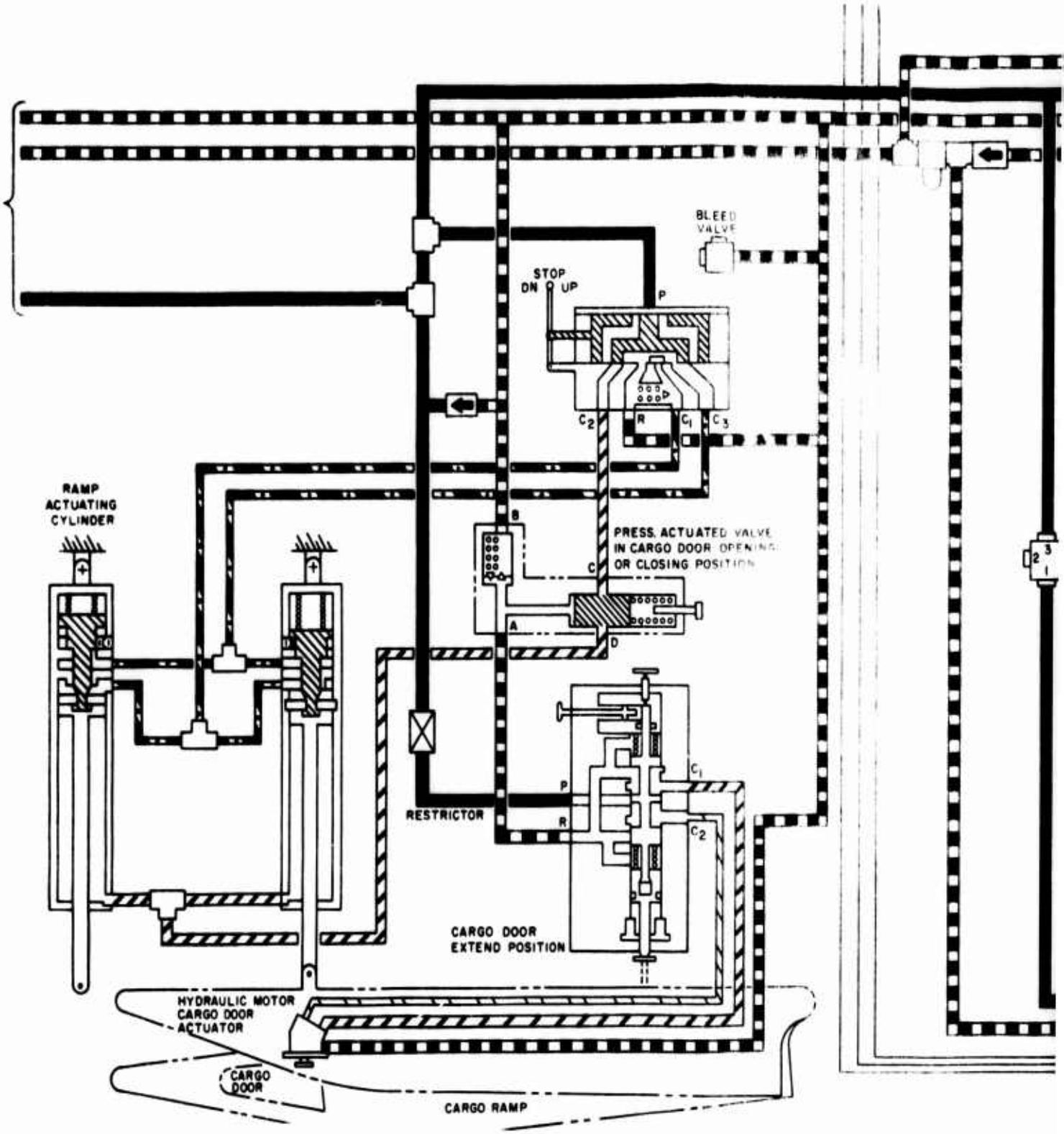

Figure 8. CH-47A Utility Hydraulic (Rotor Brake, Wheel Brake and Power Steering) System Schematic.

Preceding page blank

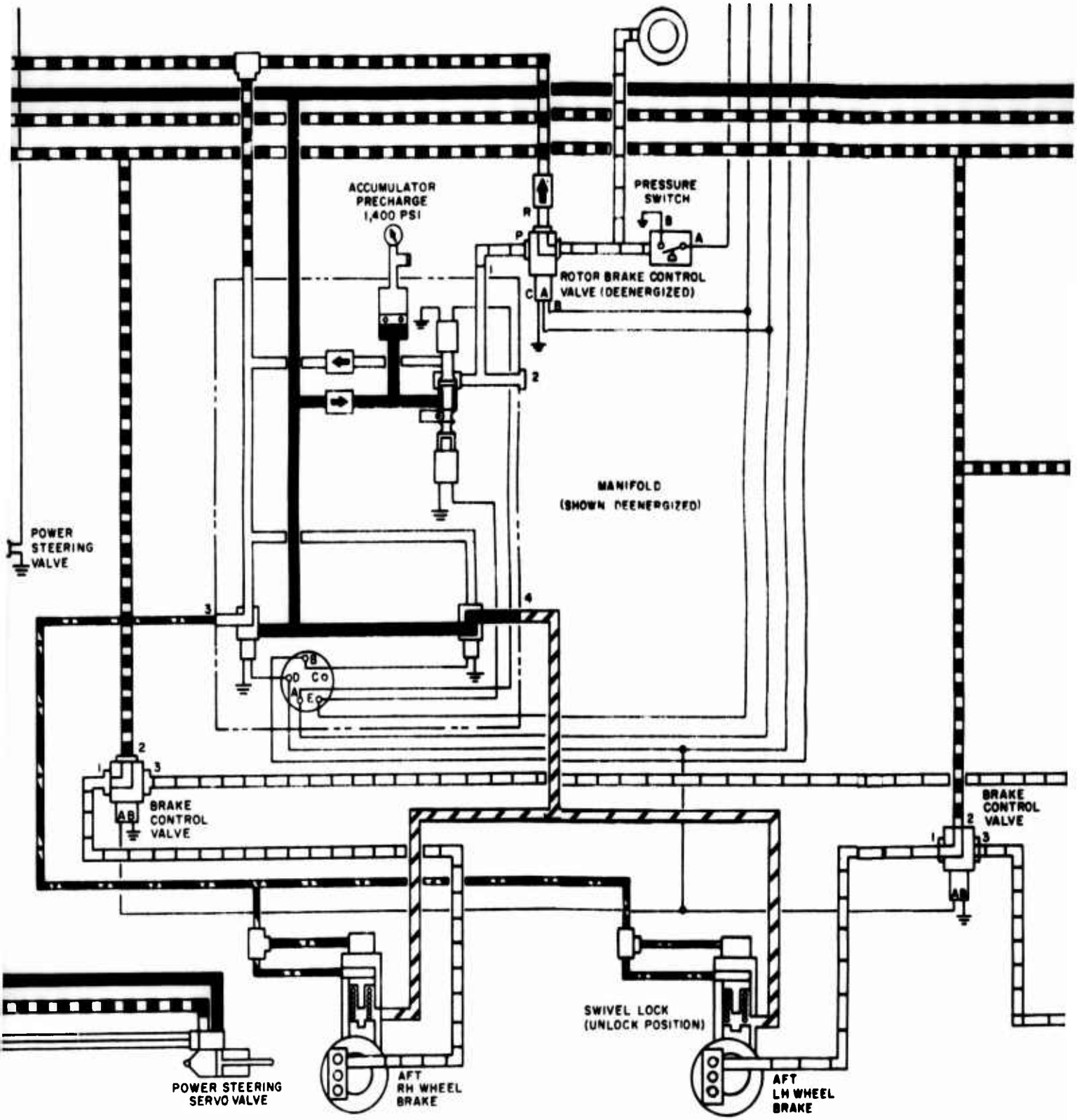
ACCUMULATOR
PRECHARGE
1,400 PSI
PRESSURE
SWITCH
ROTOR BRAKE CONTROL
VALVE (DEENERGIZED)
MANIFOLD
(SHOWN DEENERGIZED)
POWER
STEERING
VALVE
BRAKE
CONTROL
VALVE
BRAKE
CONTROL
VALVE
SWIVEL LOCK
(UNLOCK POSITION)
POWER STEERING
SERVO VALVE
AFT
RH WHEEL
BRAKE
AFT
LH WHEEL
BRAKE

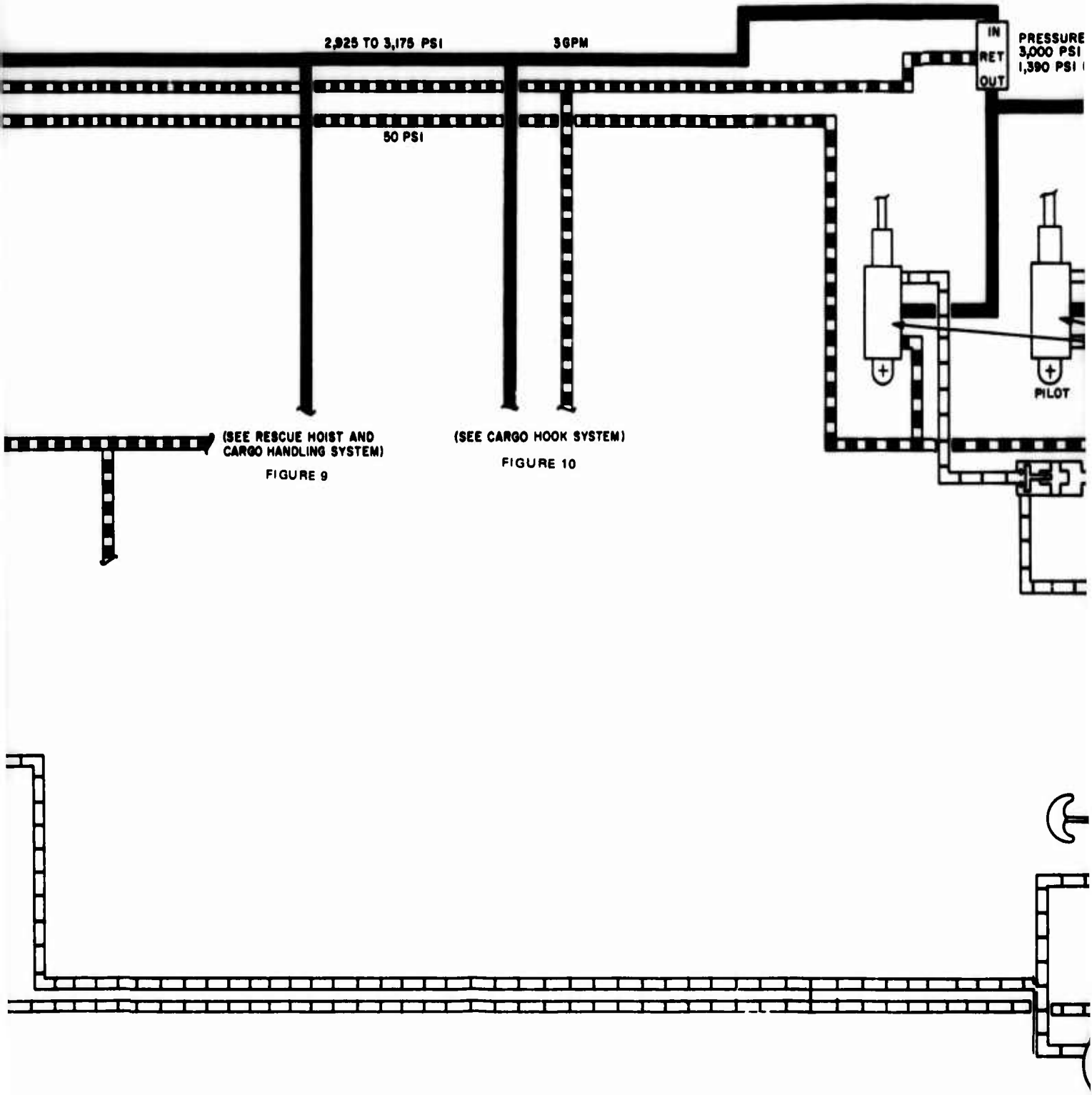
2,925 TO 3,175 PSI
3GPM
IN
RET
OUT
PRESSURE
3,000 PSI
1,390 PSI
50 PSI
PILOT
(SEE RESCUE HOIST AND
CARGO HANDLING SYSTEM)
FIGURE 9
(SEE CARGO HOOK SYSTEM)
FIGURE 10

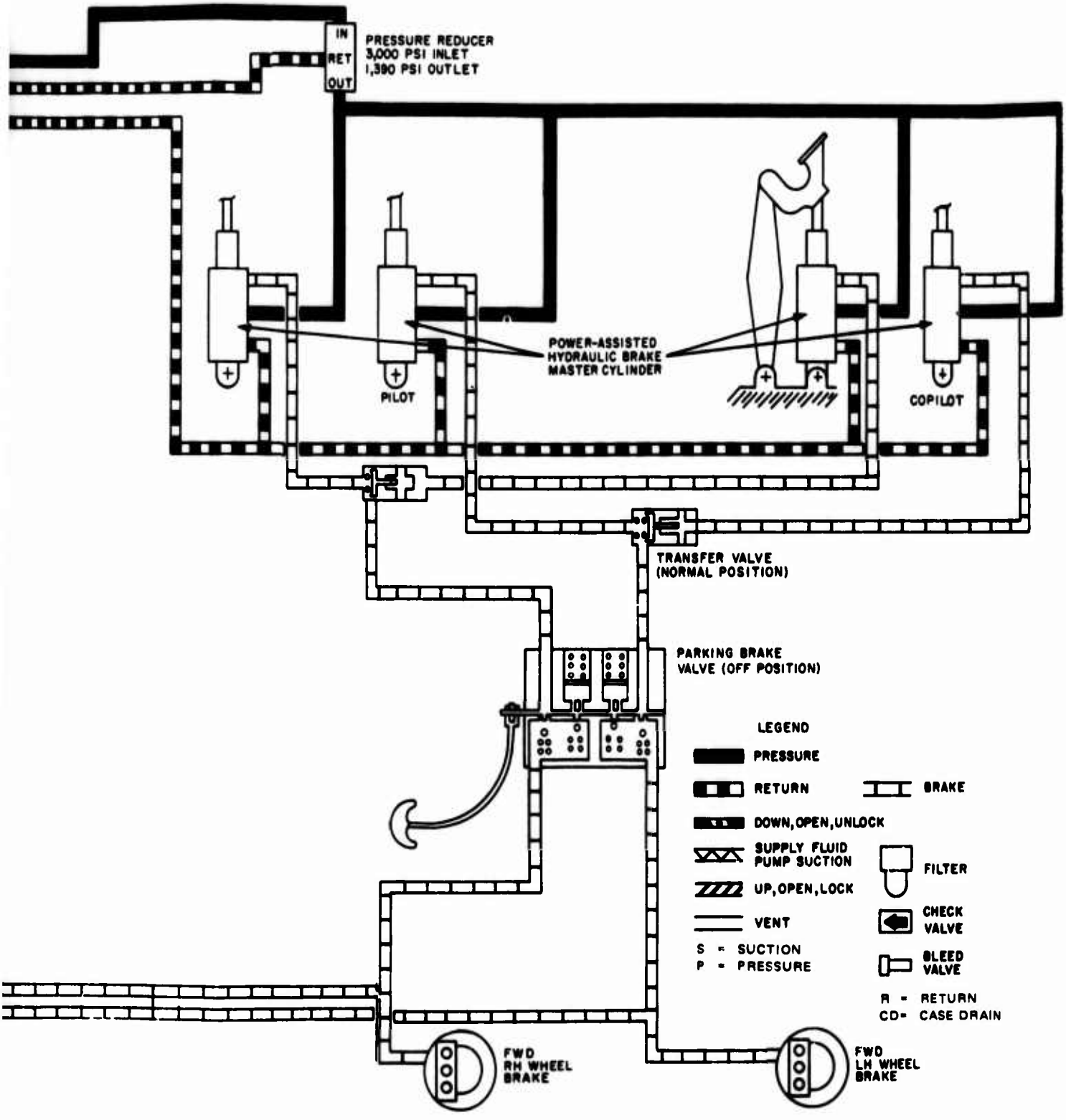
IN
RET
OUT
PRESSURE REDUCER
3,000 PSI INLET
1,390 PSI OUTLET
POWER-ASSISTED
HYDRAULIC BRAKE
MASTER CYLINDER
PILOT
COPILOT
TRANSFER VALVE
(NORMAL POSITION)
PARKING BRAKE
VALVE (OFF POSITION)
LEGEND
PRESSURE
RETURN
BRAKE
DOWN, OPEN, UNLOCK
SUPPLY FLUID
PUMP SUCTION
FILTER
UP, OPEN, LOCK
CHECK
VALVE
VENT
S = SUCTION
P = PRESSURE
BLEED
VALVE
R = RETURN
CD= CASE DRAIN
FWD
RH WHEEL
BRAKE
FWD
LH WHEEL
BRAKE

FOR CONTINUATION, SEE FIGURE 8

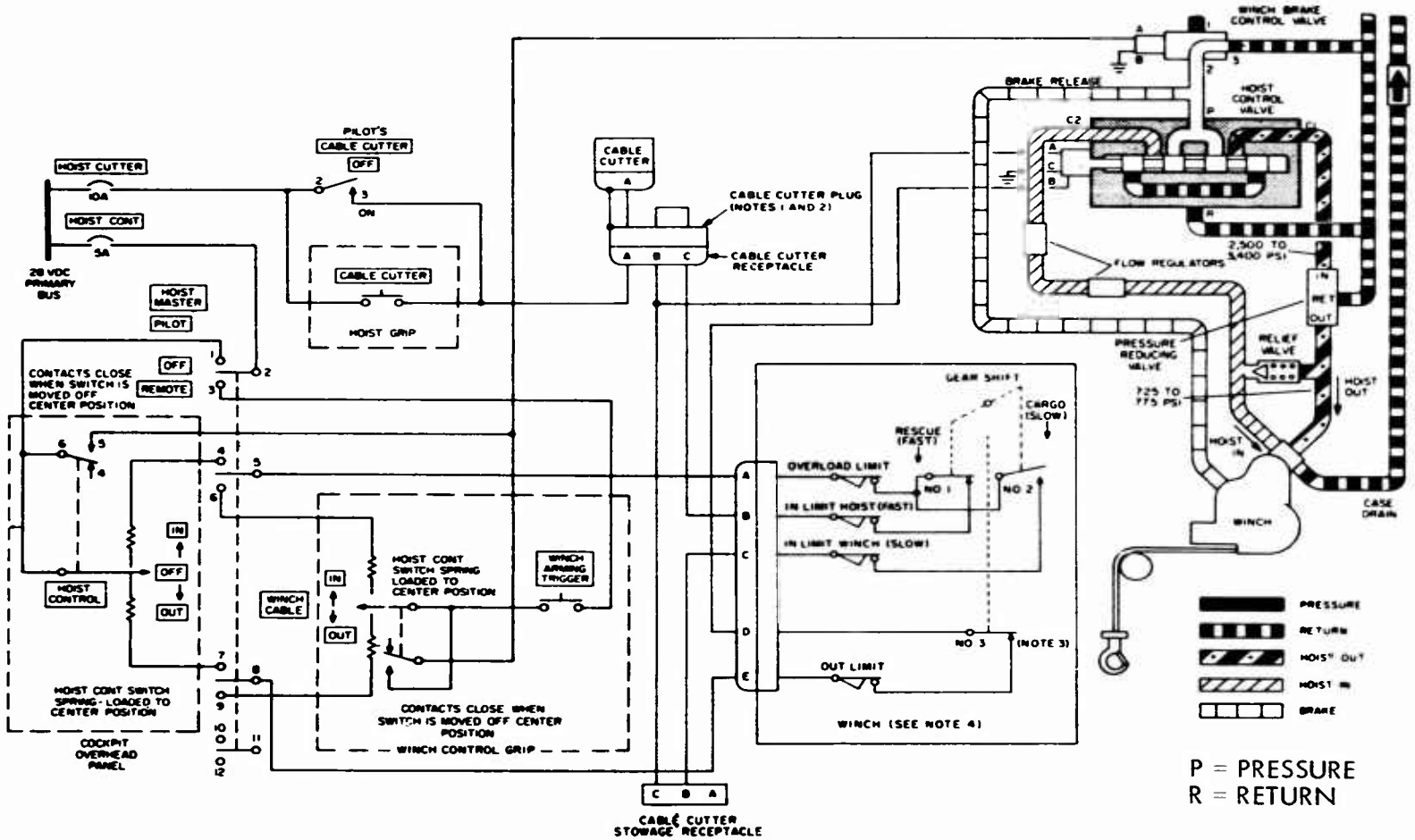

Figure 9. CH-47A Utility Hydraulic (Rescue Hoist and Cargo Handling) System Schematic.

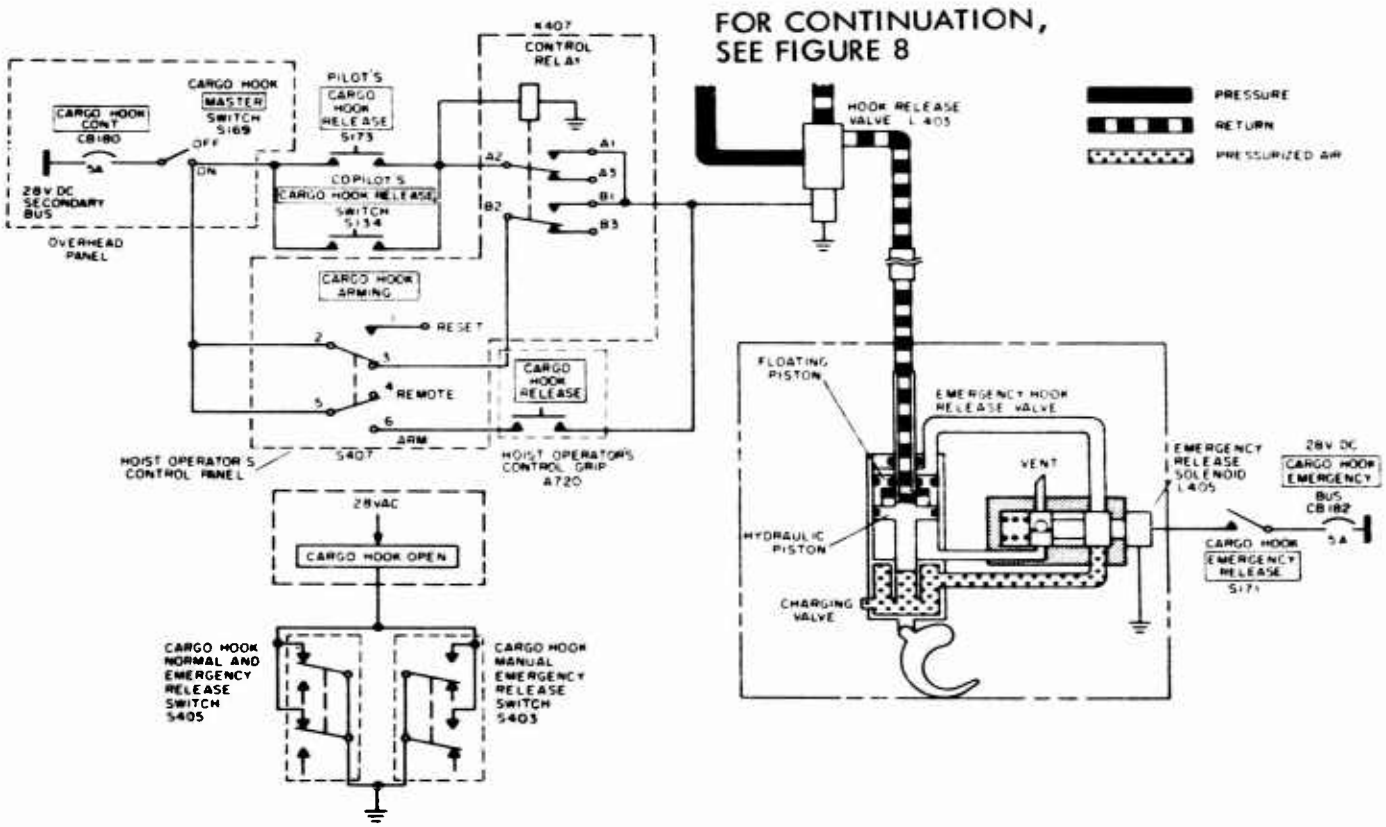

Figure 10. CH-47A Utility Hydraulic (Cargo Hook) System Schematic.

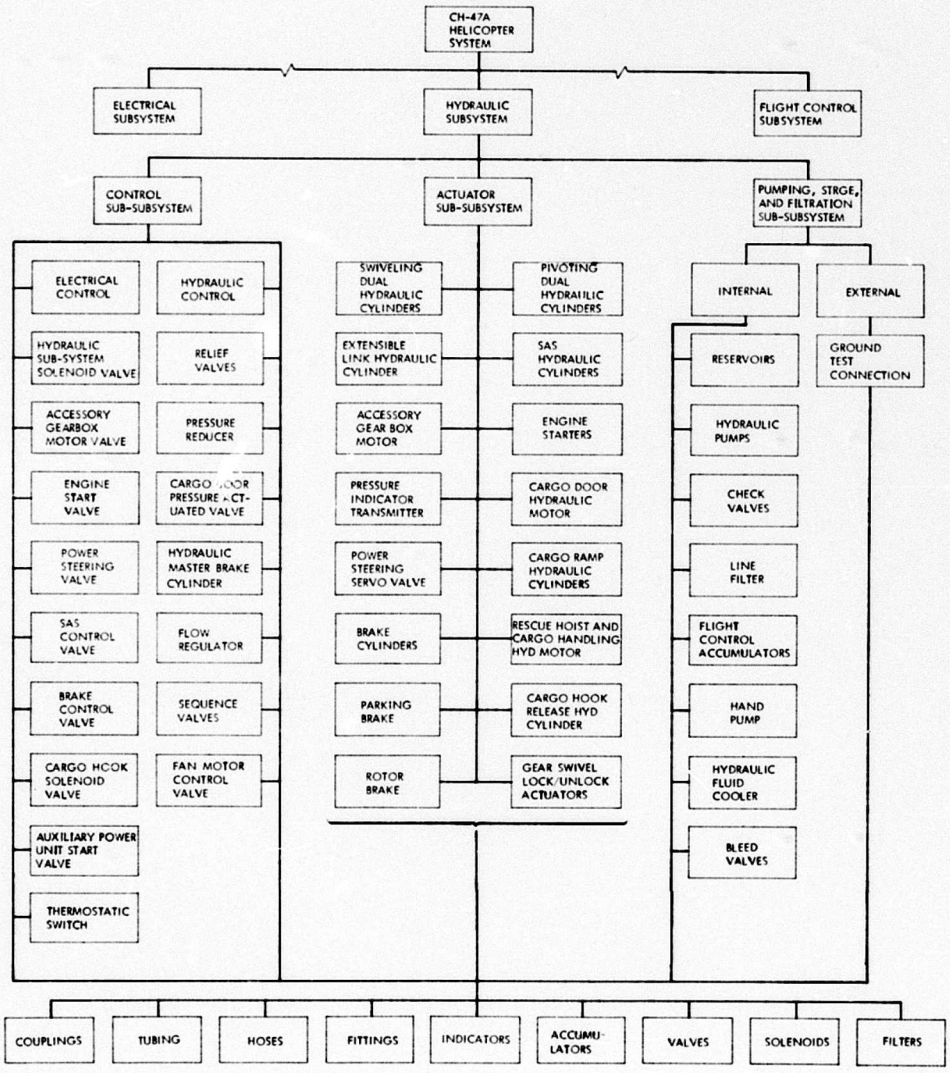

Figure 11. CH-47A Hydraulic System Block Diagram Tree.

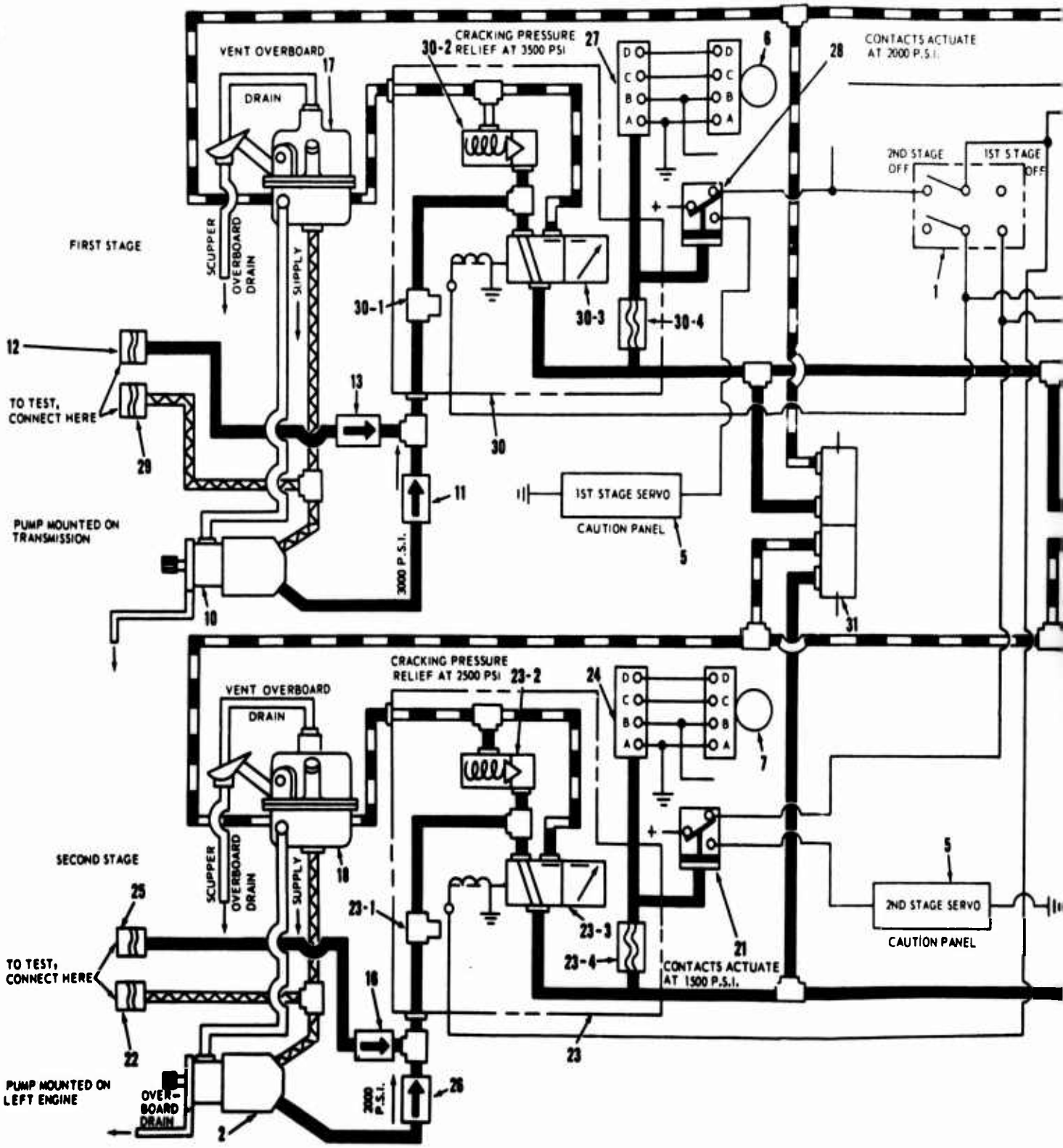

Figure 12. CH-54A Main Hydraulic System Schematic.

Preceding page blank

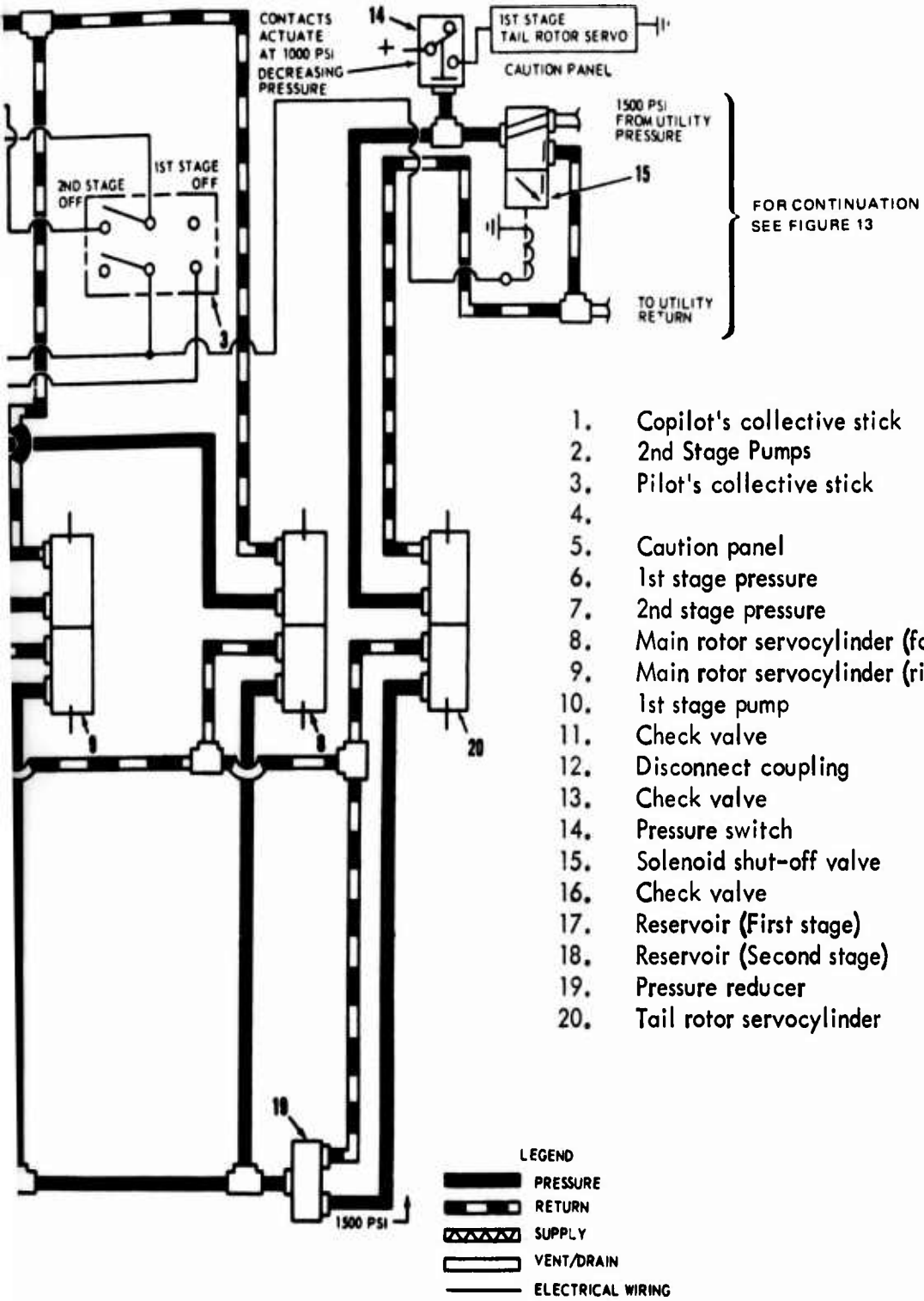

1. Copilot's collective stick
2. 2nd Stage Pumps
3. Pilot's collective stick
4.
5. Caution panel
6. 1st stage pressure
7. 2nd stage pressure
8. Main rotor servocylinder (fore and aft)
9. Main rotor servocylinder (right lateral)
10. 1st stage pump
11. Check valve
12. Disconnect coupling
13. Check valve
14. Pressure switch
15. Solenoid shut-off valve
16. Check valve
17. Reservoir (First stage)
18. Reservoir (Second stage)
19. Pressure reducer
20. Tail rotor servocylinder
21. Pressure switcl
22. Disconnect co
23. Manifold
    -1 Filter
    -2 Relief valv
    -3 Three-way
    -4 Snubber
24. Pressure transm
25. Disconnect co
26. Check valve
27. Pressure transm
28. Pressure switch
29. Disconnect co
30. Manifold
    -1 Filter
    -2 Rlief valve
    -3 Three-way
    -4 Snubber
31. Main rotor serv
32. Pressure reduce

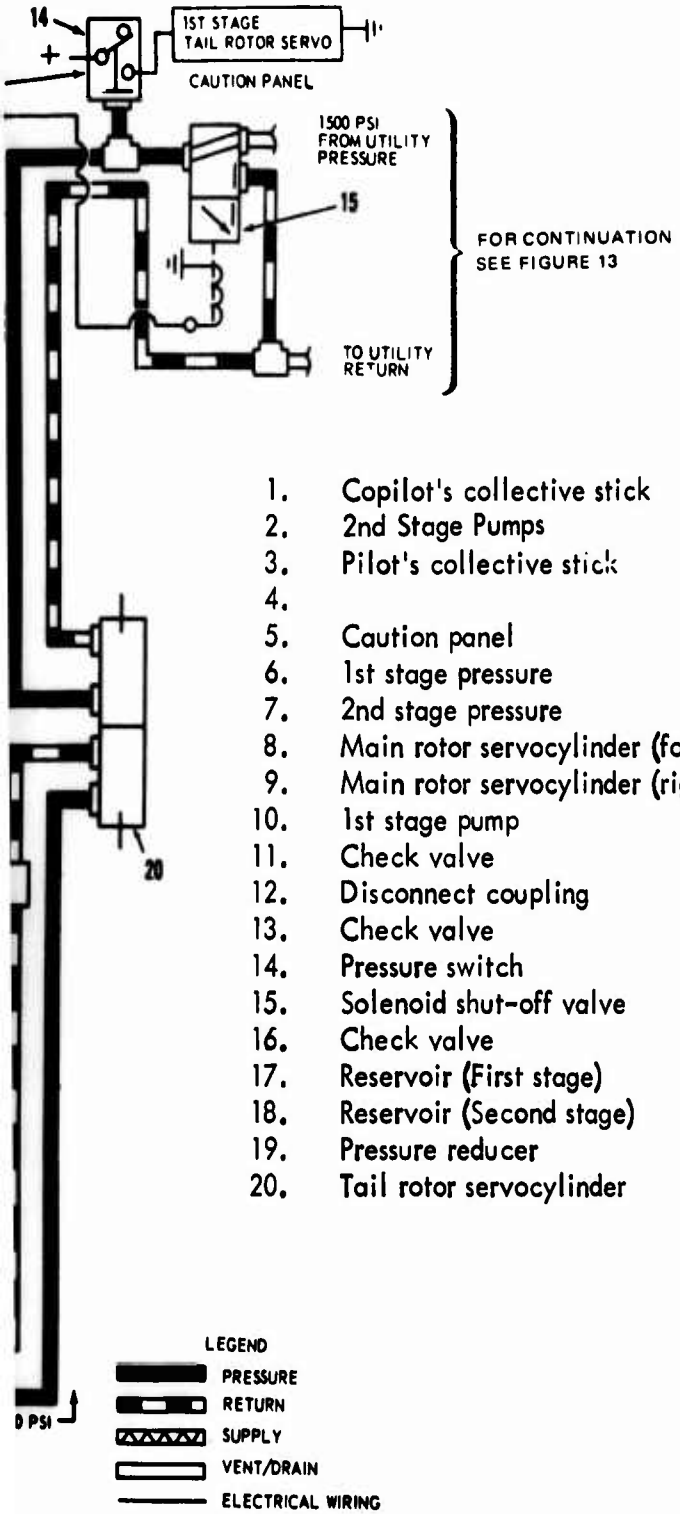

1. Copilot's collective stick
2. 2nd Stage Pumps
3. Pilot's collective stick
4.
5. Caution panel
6. 1st stage pressure
7. 2nd stage pressure
8. Main rotor servocylinder (fore and aft)
9. Main rotor servocylinder (right lateral)
10. 1st stage pump
11. Check valve
12. Disconnect coupling
13. Check valve
14. Pressure switch
15. Solenoid shut-off valve
16. Check valve
17. Reservoir (First stage)
18. Reservoir (Second stage)
19. Pressure reducer
20. Tail rotor servocylinder
21. Pressure switch
22. Disconnect coupling
23. Manifold
    - -1 Filter
    - -2 Relief valve
    - -3 Three-way solenoid control valve
    - -4 Snubber
24. Pressure transmitter
25. Disconnect coupling
26. Check valve
27. Pressure transmitter
28. Pressure switch
29. Disconnect coupling
30. Manifold
    - -1 Filter
    - -2 Rlief valve
    - -3 Three-way solenoid control valve
    - -4 Snubber
31. Main rotor servocylinder (left lateral)
32. Pressure reducer

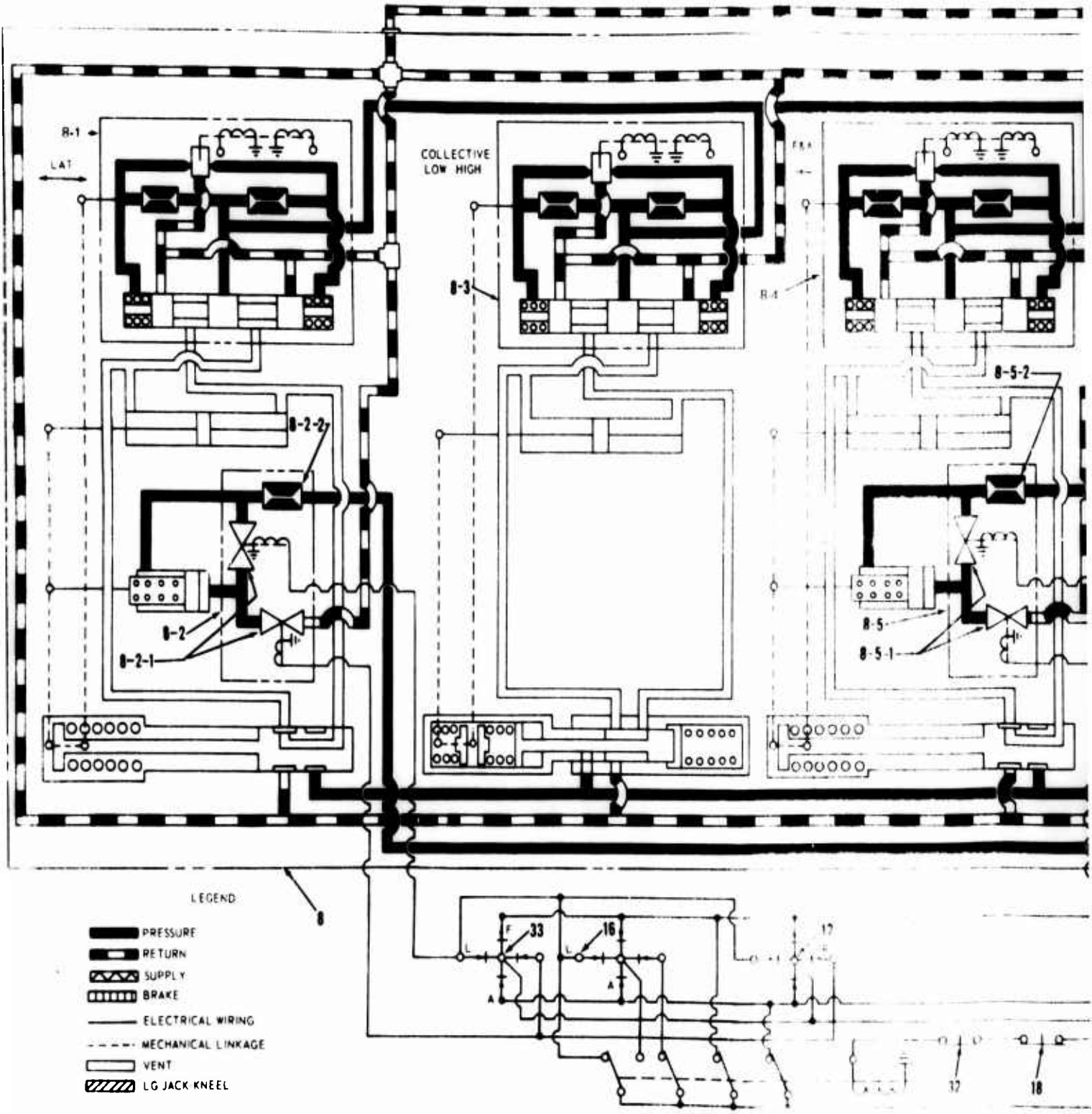

Figure 13. CH-54A Utility Hydraulic System Schematic.

Preceding page blank

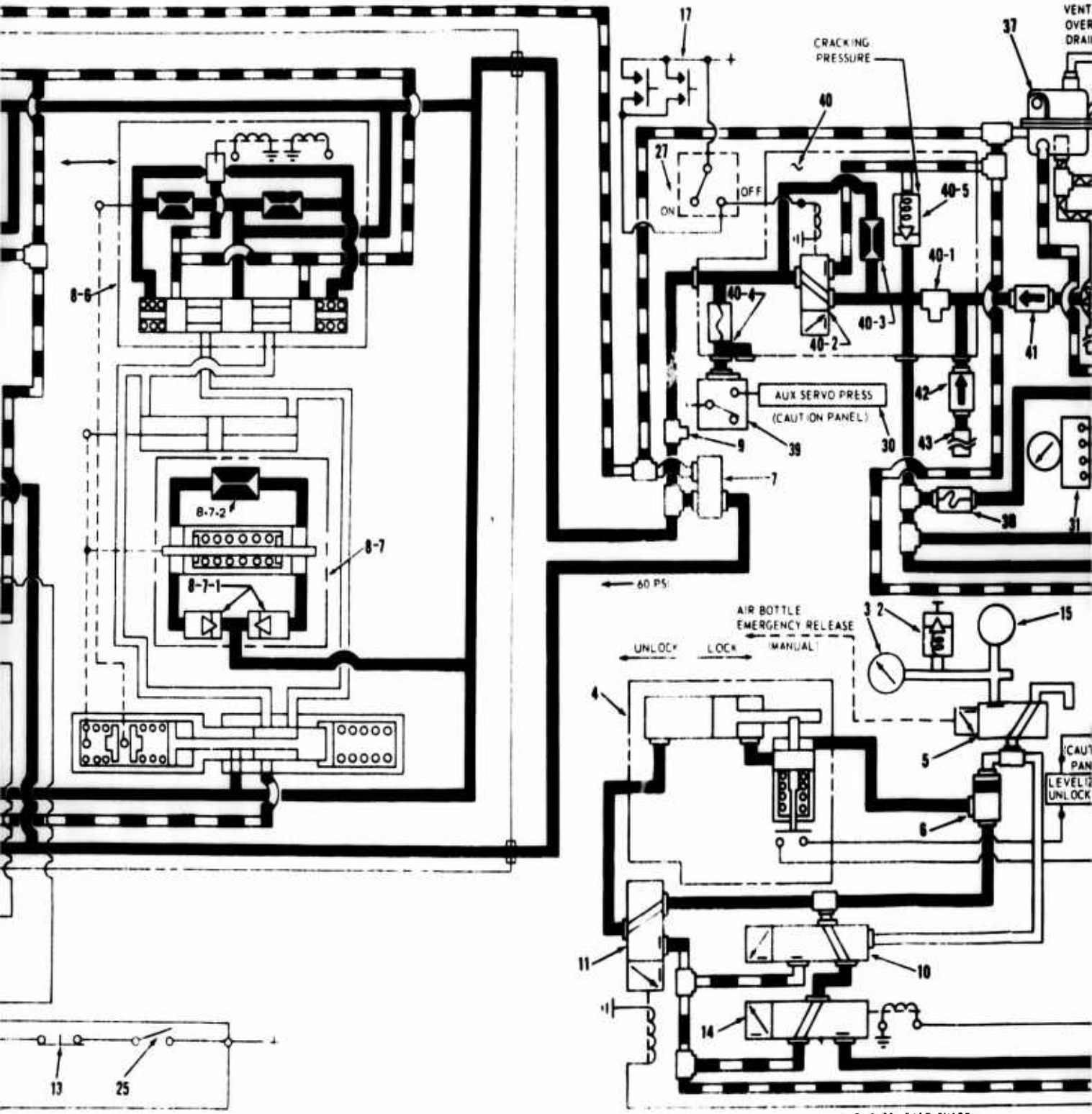

CARGO RELEASE SYSTEM

1. One-way restrictor
2. Air filler valve
3. Gage
4. Cable release cylinder
   -1 Lock and sequence valve
5. Manual control valve (emergency release)
6. Shuttle valve
7. Pressure reducer
8. AFCS servo unit
   -1 Lateral control valve
   -2 Stick trim control valve
   -2-1 Solenoid operated valves
   -2-2 Restrictor
   -3 Collective control valve
   -4 Fore and aft control valve
   -5 Stick trim control valve
   -5-1 Solenoid operated valves
   -5-2 Restrictor
   -6 Yaw control valve
   -7 Pedal damper
   -7-1 Differential check valves
   -7-2 Restrictor
9. Filter
10. Air operated unlocking valve
11. Solenoid control unlocking valve
12. Cyclic stick (aft pilot trim)
13. Cyclic stick (aft pilot release)
14. Solenoid control locking valve
15. Air b
16. Cycli
17. Colle
18. Cycli
19. Shuttl
20. Maste (left c
21. Maste (right
22. Parkin
   -1 Se
   -2 A
23. Parkin
   -1 Se
   -2 A
24. Switch
25. Conso
26. Conso
27. Conso
28. Maste (left p

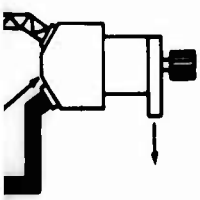

FOR CONTINUATION
SEE FIGURE 12

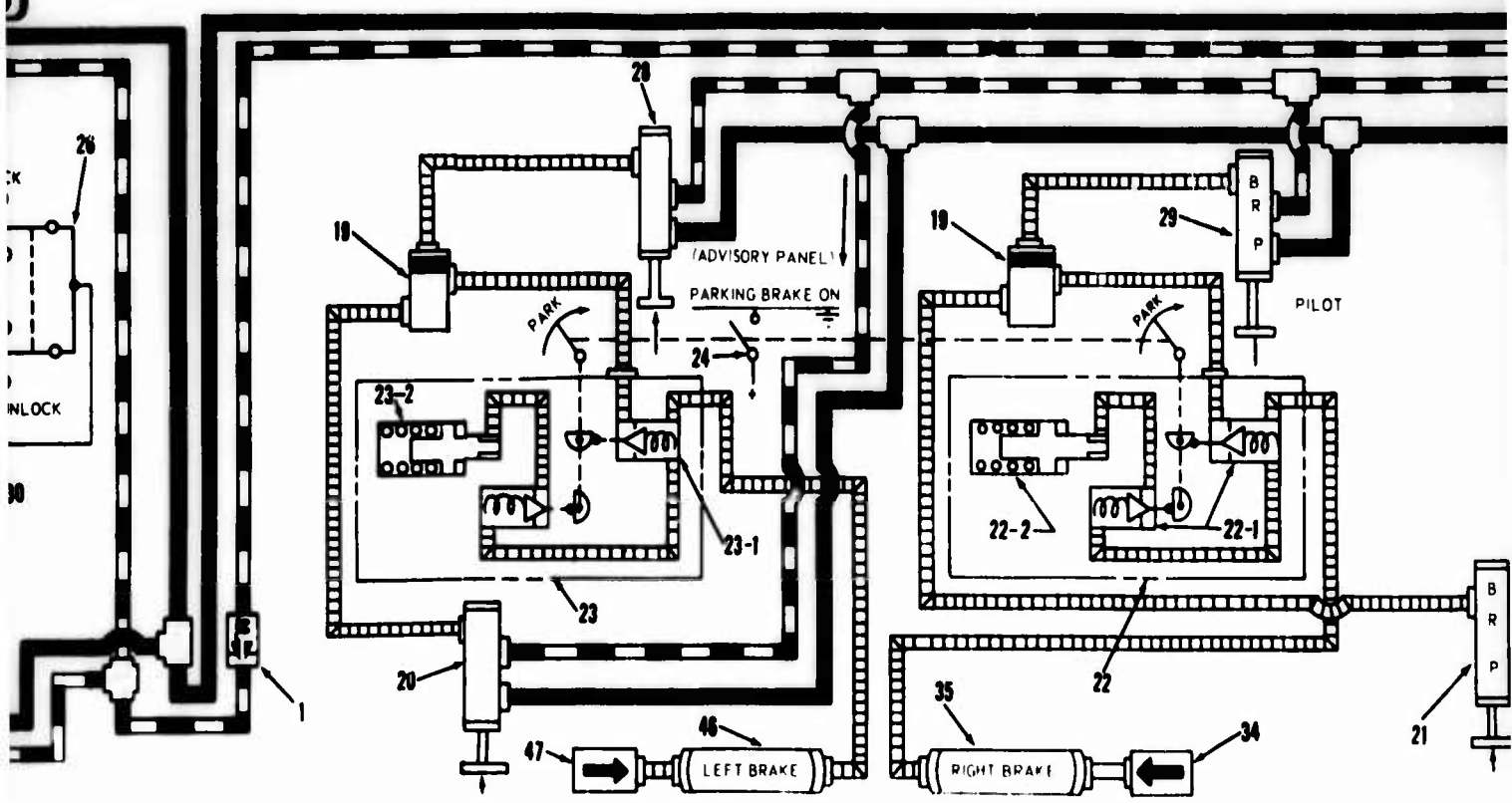

8. AFCS servo unit
   - -1 Lateral control valve
   - -2 Stick trim control valve
   - -2-1 Solenoid operated valves
   - -2-2 Restrictor
   - -3 Collective control valve
   - -4 Fore and aft control valve
   - -5 Stick trim control valve
   - -5-1 Solenoid operated valves
   - -5-2 Restrictor
   - -6 Yaw control valve
   - -7 Pedal damper
   - -7-1 Differential check valves
   - -7-2 Restrictor
9. Filter
10. Air operated unlocking valve
11. Solenoid control unlocking valve
12. Cyclic stick (aft pilot trim)
13. Cyclic stick (aft pilot release)
14. Solenoid control locking valve
15. Air bottle
16. Cyclic stick (copilot trim)
17. Collective stick (AFCS)
18. Cyclic stick (copilot release)
19. Shuttle valves
20. Master power boost cylinder (left copilot)
21. Master power boost cylinder (right copilot)
22. Parking brake valve (right)
   - -1 Sequence valves
   - -2 Accumulator
23. Parking brake valve (left)
   - -1 Sequence valves
   - -2 Accumulator
24. Switch
25. Console (stick trim master)
26. Console (levelizer switches)
27. Console (AFCS)
28. Master power boost cylinder (left pilot)
29. Master power boost cylinder (right pilot)
30. Caution - advisory panel
31. Instrument panel (utility system pressure)
32. Cyclic stick (pilot release)
33. Cyclic stick (pilot trim)
34. Check valve (right)
35. Wheel brake (right)
36. Pump
37. Reservoir
38. Snubber
39. Pressure switch
40. Manifold
   - -1 Filter
   - -2 Three-way solenoid valve
   - -3 Restrictor
   - -4 Snubber
   - -5 Relief valve
41. Check valve
42. Check valve
43. Disconnect coupling
44. Disconnect coupling
45. Pressure transmitter
46. Wheel brake (left)
47. Check valve (left)

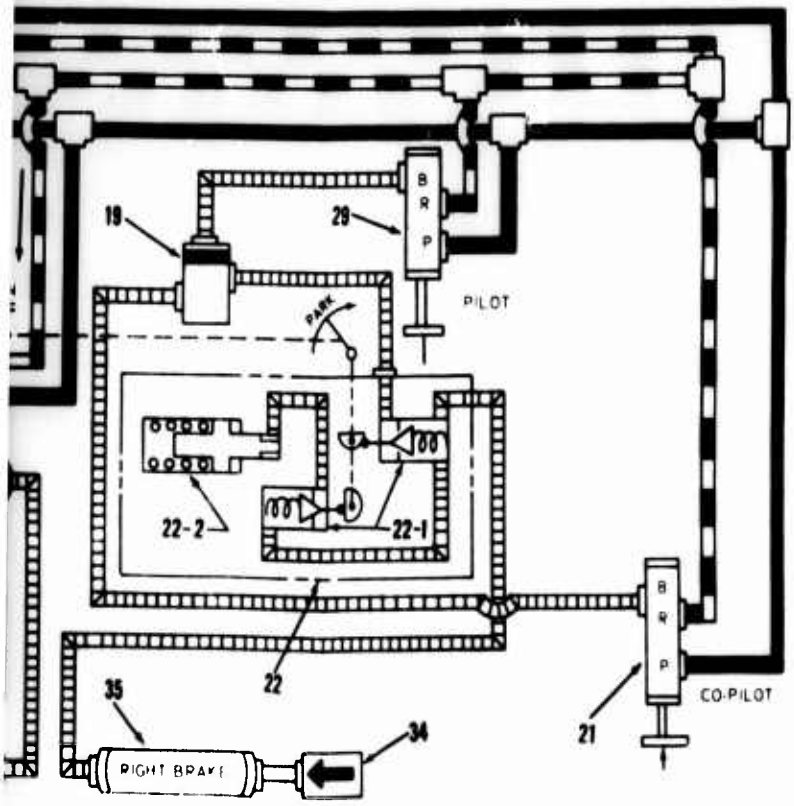

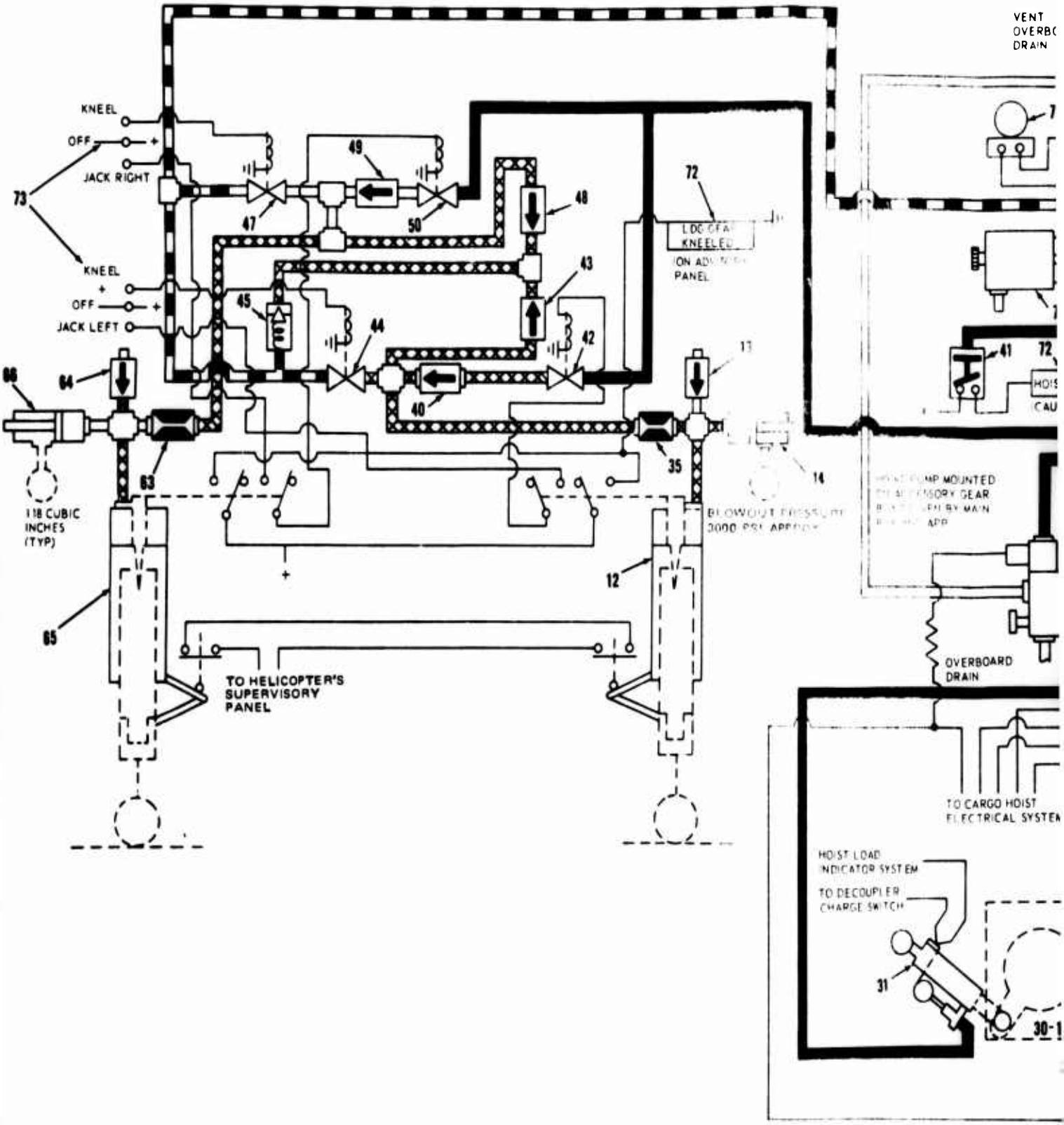

Figure 14. CH-54A Cargo Hoist Hydraulic System.

Preceding page blank

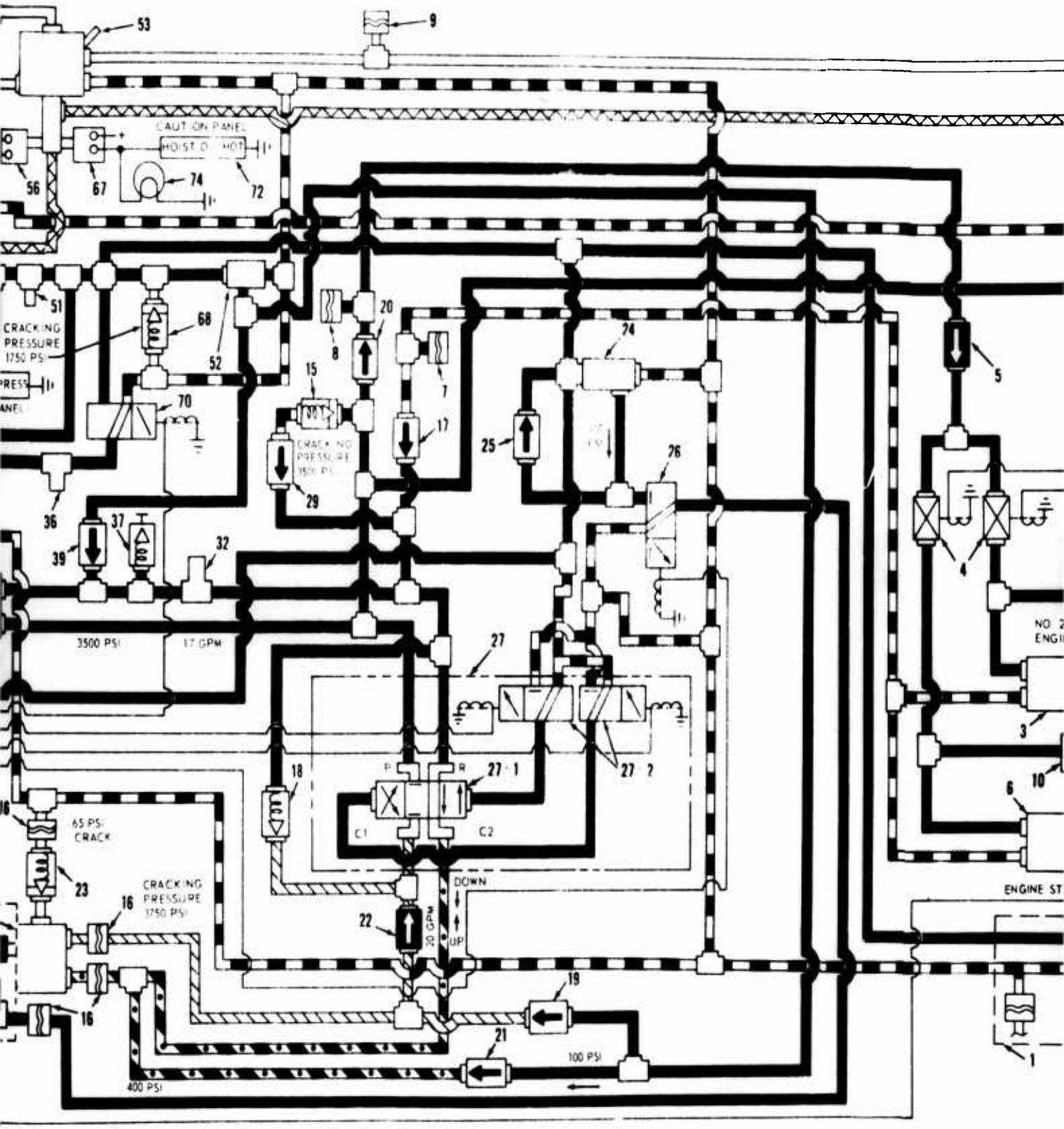

53
9
CAUTION PANEL
HOIST
HOT
56
67
74
72
51
CRACKING PRESSURE 1750 PSI
68
52
8
20
15
7
24
5
70
17
25
26
CRACKING PRESSURE 3500 PSI
29
36
37
39
32
4
3500 PSI
17 GPM
27
NO. 2 ENGI
3
18
P
R
27-1
27-2
10
6
16
65 PSI CRACK
C1
C2
23
CRACKING PRESSURE 1750 PSI
16
DOWN
UP
22
20 GPM
ENGINE ST
19
16
21
100 PSI
1
400 PSI

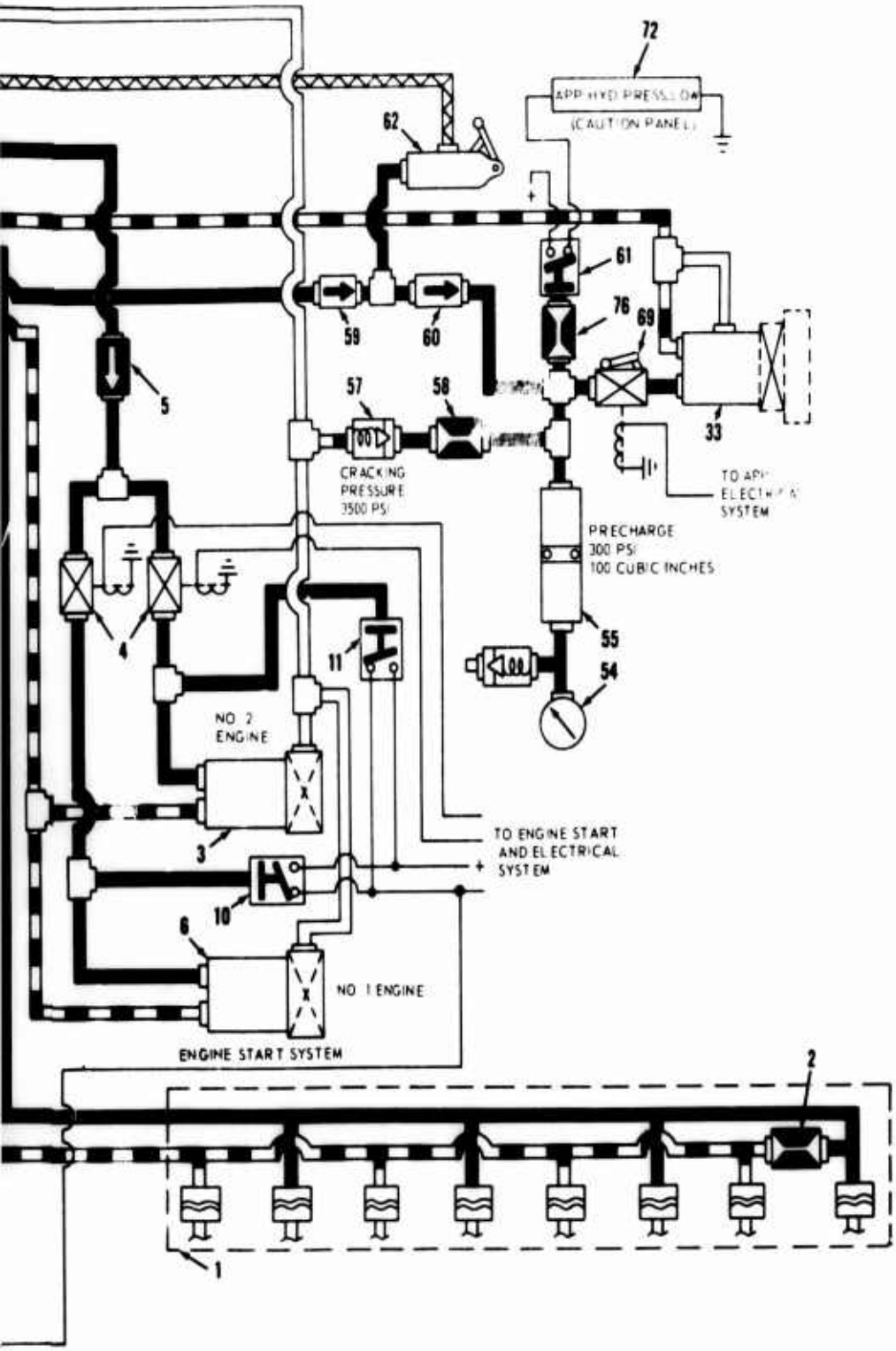

1. Disconnect couplings
2. Restrictor
3. Start motor (right engine)
4. Start valves (engine)
5. Flow regulator
6. Start motor (left engine)
7. Disconnect coupling
8. Disconnect coupling
9. Disconnect coupling
10. Pressure switch
11. Pressure switch
12. Landing gear (right)
13. Check valve
14. Energy absorption fuse
15. Relief valve
16. Disconnect couplings
17. Check valve
18. Relief valve
19. Check valve
20. Check valve
21. Check valve
22. Flow regulator
23. Relief valve
24. Reducer
25. Check valve
26. Hoist brake servo valve (three-way valve)
27. Hoist control valve (four-way valve)

1. Disconnect couplings
2. Restrictor
3. Start motor (right engine)
4. Start valves (engine)
5. Flow regulator
6. Start motor (left engine)
7. Disconnect coupling
8. Disconnect coupling
9. Disconnect coupling
10. Pressure switch
11. Pressure switch
12. Landing gear (right)
13. Check valve
14. Energy absorption fuse
15. Relief valve
16. Disconnect couplings
17. Check valve
18. Relief valve
19. Check valve
20. Check valve
21. Check valve
22. Flow regulator
23. Relief valve
24. Reducer
25. Check valve
26. Hoist brake servo valve (three-way valve)
27. Hoist control valve (four-way valve)
    -1 Four-way hydraulically operated valve
    -2 Three-way solenoid operated valves
28. Cargo hoist motor
29. Check valve
30. Cargo hoist
    -1 Cargo hoist brake
31. Decoupler
32. Filters
33. Start motor (APP)
34. Hydraulic pump (hoist)
35. Restrictor
36. Filter
37. Bleeder valve
38.
39. Check valve
40. Check valve
41. Pressure switch
42. Jacking valve (right)
43. Check valve
44. Kneeling valve (right)
45. Relief valve
46. Restrictor
47. Kneeling valve (left)
48. Check valve
49. Check valve
50. Jacking valve (left)
51. Pressure reducer
52. Restrictor
53. Reservoir
54. Gage
55. Accumulator
56. Temperature bulb
57. Relief valve
58. Restrictor
59. Check valve
60. Check valve
61. Pressure switch
62. Hand pump
63. Restrictor
64. Check valve
65. Landing gear (left)
66. Energy absorption fuse
67. Plugstat
68. Relief valve
69. Start valve (APP)
70. Three-way control valve
71. Hydraulic pump (make-up)
72. Instrument panel (caution-advisory)
73. Console (control switches)
74. Instrument panel (aft pilot)
75. Instrument panel (temperature)
76. Restrictor

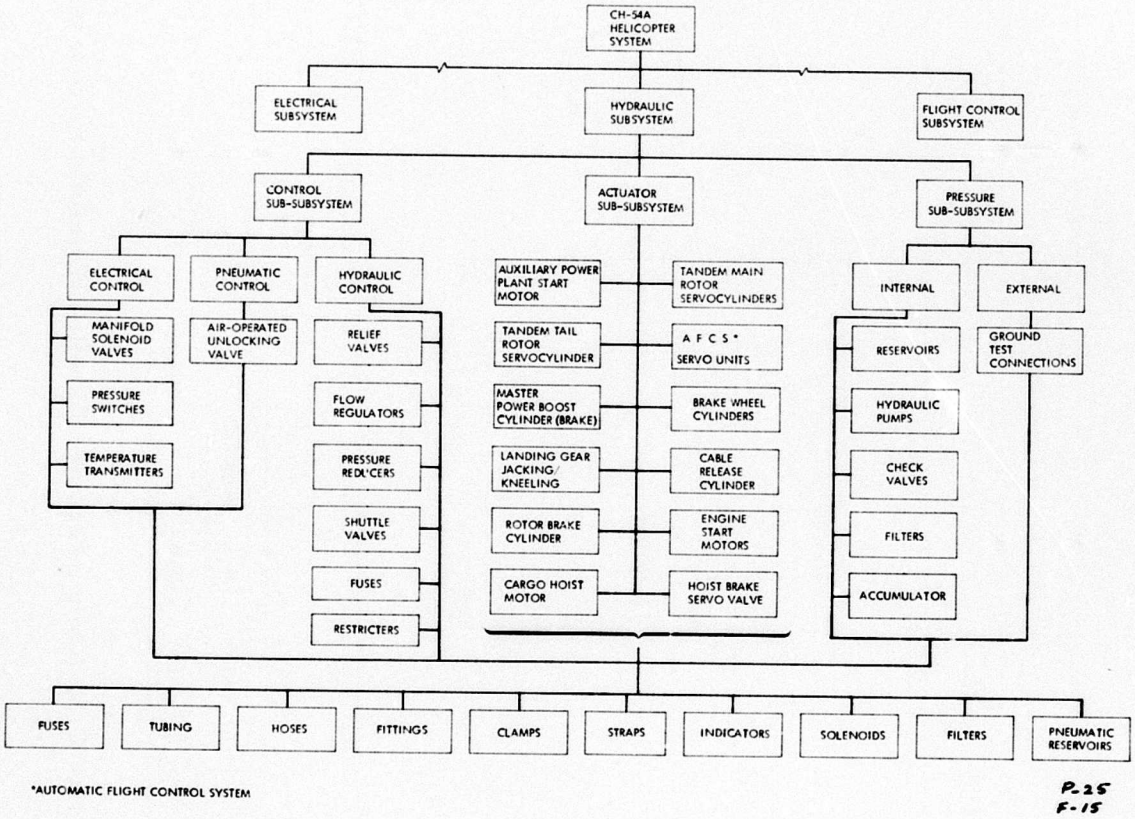

Figure 15. CH-54A Hydraulic System Block Diagram Tree.

Preceding page blank

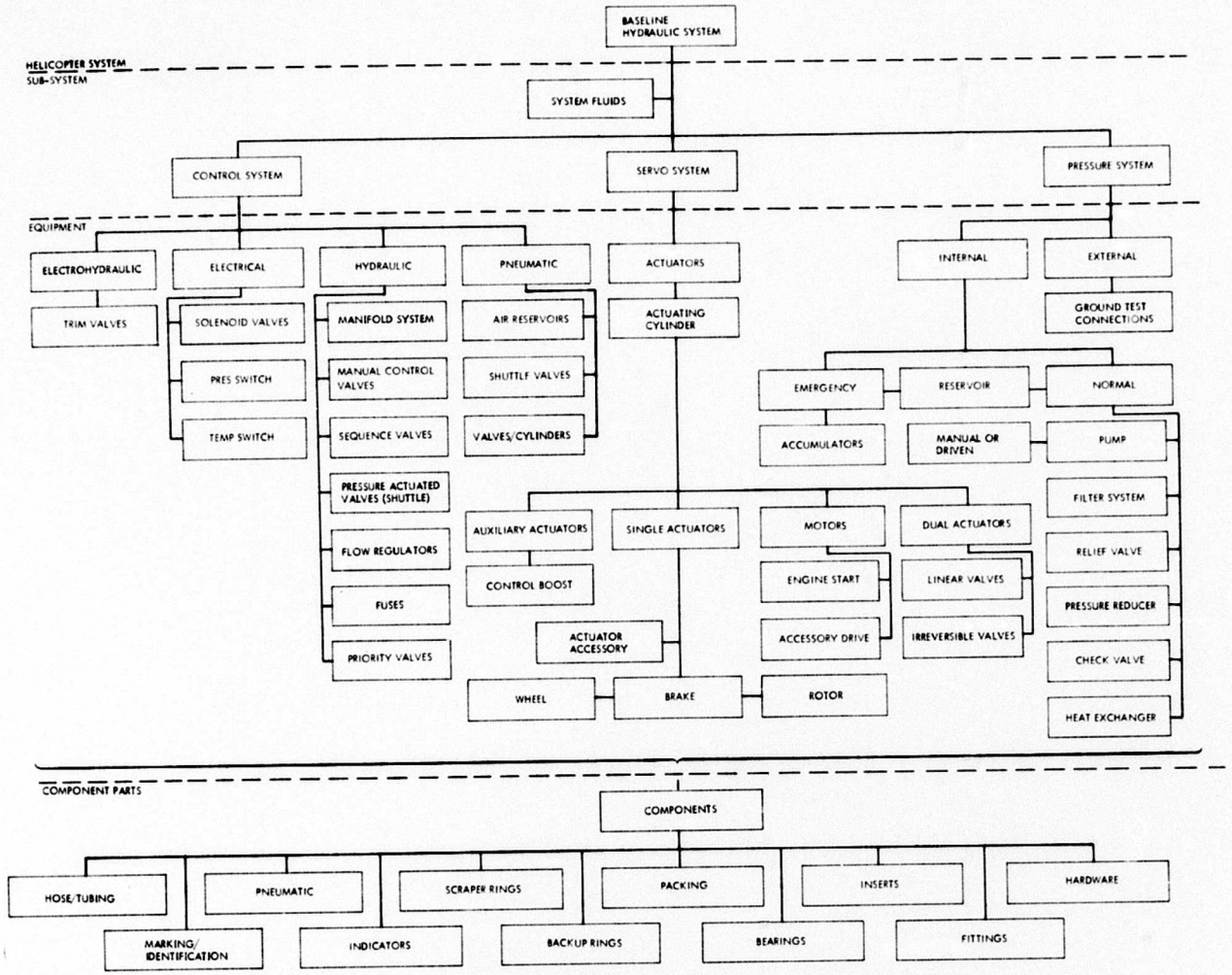

Figure 16. U.S. Army Helicopter Baseline Hydraulic System Block Diagram Tree.

DOCUMENTATION CLASSIFICATION

During the course of the hydraulic system documentation investigation, over two hundred documents were gathered. Appendix I lists those documents examined during this investigation. Of this total, 104 were determined to be applicable to one or more of the four representative helicopter systems previously mentioned. The remaining documents were judged to be inapplicable to any of the representative helicopter systems and are listed in Appendix II.

The documents that were used were obtained from the following sources:

1. Helicopter Technical Manuals (TM's)

2. Department of Defense Index of Specifications and Standards (DODISS)

3. Airframe manufacturers and component suppliers

4. U.S. Army Aviation Systems Command (AVSCOM), St. Louis, Missouri

5. Manufacturers' detailed design specifications for the CH-47 and CH-54

HELICOPTER TECHNICAL MANUALS

Following compilation of all pertinent documentation, the TM's applicable to the AH-1G, UH-1D/H, CH-47A and CH-54A/B helicopters were reviewed to identify and classify each of the hydraulic system components. Table II lists the TM's that were used.

Each of the helicopter maintenance manuals was used as the source document for the applicable components list. These included:

1.	AH-1G	-	TM 55-1520-221-20P
		-	TM 55-1520-221-34P
2.	UH-1D/H	-	TM 55-1520-210-20P
		-	TM 55-1520-210-34P
3.	CH-47A	-	TM 55-1520-209-20P
		-	TM 55-1520-209-34P
		-	TM 55-1520-209-35
4.	CH-54A/B	-	TM 55-1520-217-20P
		-	TM 55-1520-217-35P

TABLE II. APPLICABLE HELICOPTER TECHNICAL MANUALS

Designation	Technical Manuals
AH-1G	TM 55-1520-221-20, "Organizational Maintenance Manual, Army Model AH-1G Helicopter", dated 10 September 1971
	TM 55-1520-221-20P, "Organizational Maintenance Repair Parts and Special Tools List, Helicopter, Attack - AH-1G (Bell)", dated 1 June 1971
	TM 55-1520-221-34, "DS and GS Maintenance Manual, Army Model AH-1G Helicopter", * dated 27 August 1971
	TM 55-1520-221-34P, "DS, GS and Depot Maintenance Repair Parts and Special Tools List, Helicopter, Attack - AH-1G (Bell)", dated June 1971
UH-1D/H	TM 55-1520-210-20, "Organizational Maintenance Manual: Army Model UH-1D/H Helicopter", dated 7 May 1969
	TM 55-1520-210-20P, "Organizational Maintenance Repair Parts and Special Tools List, Helicopter, Utility-Tactical Transport, UH-1A, UH-1B, UH-1C, UH-1D, UH-1H (Bell)", dated April 1971
	TM 55-1520-210-34, "DS and GS Maintenance Manual, Army Model UH-1D/H Helicopter", dated 10 September 1971
	TM 55-1520-210-34P, "DS and GS Maintenance and Repair Parts and Special Tools List, UH-1B, UH-1C, UH-1D, UH-1H, UH-1M (Bell)", dated December 1971
CH-47A	TM 55-1520-209-20, "Organizational Maintenance Manual, Army Model CH-47A Helicopter", dated May 1968

TABLE II - Continued	
Designation	Technical Manuals
	TM 55-1520-209-20P, "Organizational Maintenance Repair Parts and Special Tools List, Helicopter, Cargo Transport, CH-47A, CH-47B, CH-47C (Vertol)", dated August 1971
	TM 55-1520-209-35, "DS, GS and Depot Maintenance Manual, Army Model CH-47A Helicopter", dated May 1968
	TM 55-1520-209-34P, "DS and GS Maintenance Repair Parts and Special Tools List, Helicopter, Cargo Transport, CH-47A, CH-47B, CH-47C (Vertol)", dated August 1971
CH-54A/B	TM 55-1520-217-20, "Organizational Maintenance Manual, CH-54A Helicopter", dated April 1969
	TM 55-1520-217-20P, "Organizational Maintenance Repair Parts and Special Tools List, Helicopter, Cargo Transport, CH-54A, CH-54B (Sikorsky)", dated July 1971
	TM 55-1520-217-35, "DS, GS and Depot Maintenance Manual, CH-54A Helicopter", dated April 1969
	TM 55-1520-217-35P, "DS, GS and Depot Maintenance Repair Parts and Special Tools List, CH-54A (Sikorsky)", dated 19 December 1968
*D.S. = Direct Support G.S. = General Support	

Table III lists hydraulic system components by military standard number and helicopter application. Each of these military standards was reviewed to determine the military or Federal specification that controls the design and procurement of the pertinent item.

TABLE III. HYDRAULIC SYSTEM DOCUMENTATION

Military Standard		Applicable MIL-Spec	Helicopter Applicability			
Number	Title	Number	AH-1G	UH-1H	CH-47A	CH-54A
AN3	Bolt-Machine A/C	MIL-B-6812	X	X	X	X
AN4	Bolt-Machine A/C	MIL-B-6812	X		X	X
AN5	Bolt-Machine A/C	MIL-B-6812			X	
AN6	Bolt-Machine A/C	MIL-B-6812				X
AN23	Bolt, Clevis	MIL-B-6812			X	
AN174	Bolt, Eye, Bolt, Machine, Close Tolerance, A/C	MIL-B-6812	X	X		X
AN175	Bolt, Eye, Bolt, Machine, Close Tolerance, A/C	MIL-B-6812	X			
AN206	Bearing, Ball	MIL-B-7949		X		
AN310	Nut, Plain, Castellated	FF-N-836	X	X	X	
AN316	Nut, Jam, Hex	FF-N-836	X	X	X	
AN320	Nut, Plain, Castellated	FF-N-836	X			X
AN365	Nut, Self-Locking	AN-M-5			X	
AN500	Screw, Machine	FF-S-92	X	X		
AN501	Screw, Machine	FF-S-92				X
AN502	Screw, Machine	MIL-S-7839			X	X
AN503	Screw, Machine	FF-S-92			X	X
AN525	Screw, Washer Head	AN-S-52		X	X	
AN565	Set Screw - Hex	FF-S-103			X	
AN743	Bracket, Support Clamp	-	X	X	X	X
AN783	Tee, Flared Tube	MIL-F-5509				X
AN784	Tee, Flared Tube	MIL-F-5509				X
AN804	Tee, Flared Tube	MIL-F-5509				X

TABLE III - Continued

Military Standard		Applicable MIL-Spec	Helicopter Applicability			
Number	Title	Number	AH-1G	UH-1H	CH-47A	CH-54A
AN814	Plug and Bleeder	MIL-F-5509	X	X	X	X
AN815	Union-Flared Tube	MIL-F-5509				X
AN818	Nut, Coupling	MIL-F-5509				X
AN821	Elbow-Flared Tube	MIL-F-5509				X
AN832	Union-Flared Tube	MIL-F-5509				X
AN833	Elbow-Flared Tube	MIL-F-5509				X
AN837	Elbow-Flared Tube	MIL-F-5509				X
AN893	Bushing-Screw Thread Reducer	MIL-F-5509	X		X	X
AN912	Bushing - Reducer	MIL-F-5509				X
AN919	Reducer - External Thread, Flared Tube	MIL-F-5509				X
AN924	Nut, Plain Hex	MIL-F-5509	X		X	X
AN929	Cap Assy, Pressure	MIL-F-5509				X
AN932	Plug, Pipe	MIL-F-5509	X	X		
AN937	Cross, Internal Screw	MIL-F-5509	X	X	X	X
AN938	Tee, Internal Screw	MIL-F-5509	X	X	X	X
AN939	Elbow, Internal Screw Thread, 90°	MIL-F-5509	X	X	X	X
AN941	Elbow, Internal Screw Thread, 45°	MIL-F-5509	X			X
AN4047	Gasket	-			X	X
AN6203	Accumulator, Hydraulic Pressure	MIL-A-5498				X
AN6204	Valve, Hydraulic Bleeder	MIL-F-5509			X	X
AN6227	Packing O-Ring, Hydraulic	MIL-P-5516	X	X	X	X

TABLE III - Continued

Military Standard		Applicable MIL-Spec	Helicopter Applicability			
Number	Title	Number	AH-1G	UH-1H	CH-47A	CH-54A
AN6230	Gasket O-Ring, Hydraulic	MIL-P-5516	X	X	X	X
AN6235	Filter Element - Hydraulic Replaceable Micronic Line Type	MIL-F-5504	X			
AN6236	Filter Element - Hydraulic Replaceable Reservoir Type	MIL-F-5504				X
AN6237	Filter Element - Hydraulic Replaceable Micronic Vent Type	AN-F-3		X		X
AN6240	Filter - Hydraulic Replaceable Element Vent Type	AN-F-3		X	X	
AN6246	Ring - Hydraulic Packing Backup	-		X		
AN6248	Pump - Hydraulic Hand	AN-F-14		X	X	X
AN6270	Hose Assy					X
AN6285	Adapter - Air Press. Gage	MIL-F-5509			X	X
AN6289	Nut - Flared Tube	MIL-F-5509	X	X	X	X
MS2190	Elbow	-	X			
MS3112	Connector, Receptacle	MIL-C-26482			X	
MS3119	Connector, Receptacle	MIL-C-26482	X			
MS3181	Cover, Protective	MIL-C-26482	X			
MS8000	Hose Assy, Detachable Fittings	MIL-H-25579	X	X		X

TABLE III - Continued

Military Standard		Applicable MIL-Spec	Helicopter Applicability			
Number	Title	Number	AH-1G	UH-1H	CH-47A	CH-54A
MS8001	Hose Assy, Detachable Fittings	MIL-H-25579	X	X	X	X
MS9015	Plug, Machine Thread	-		X		
MS9021	Packing, Preformed	-			X	
MS9058	Ring - Backup, Boss Connection	-		X		
MS9088	Bolt-Machine, Steel	-			X	
MS9099	Nut, Hex, Boss Connection, Aluminum	-	X	X		
MS9135	Gasket, Type XI Engine Accessory Dr	-	X	X		X
MS9136	Gasket, Type XII, 14A, B, E, 17A, B	-				X
MS4984	Ring, Backup, Boss Connection	-	X	X	X	
MS15001	Fittings, Lube (Hydraulic) Surface Check	MIL-F-3541	X	X		
MS15003	Fittings, Lube (Hydraulic) Surface Check	MIL-F-3541	X	X		
MS16562	Pin, Spring, Tubular	MIL-P-10971			X	
MS16624	Ring, Retaining, External, Basic	MIL-R-21248				X
MS16625	Ring, Retaining, Internal, Basic	MIL-R-21248 Ty. I, CL. 2	X	X	X	X
MS16627	Ring, Retaining, Internal, Inverted	MIL-R-21248 Ty. I, CL. 3			X	
MS16629	Ring, Retaining, Internal, Bowed	MIL-R-21248 Ty. II, CL. 1			X	

TABLE III - Continued

Military Standard		Applicable MIL-Spec	Helicopter Applicability			
Number	Title	Number	AH-1G	UH-1H	CH-47A	CH-54A
MS16633	Ring, Retaining External, "E"	MIL-R-21248			X	
MS16998	Screw, Cap, Socket-Head	FF-S-86	X	X	X	
MS17131	Bearing, Roller	-			X	
MS17825	Nut, Self-Locking	MIL-N-25027	X	X		
MS17826	Nut, Self-Locking	MIL-N-25027			X	
MS19059	Balls, Bearing, Ferrous, Chrome	MIL-B-1083	X			
MS19060	Balls, Bearing	MIL-B-1083	X	X	X	
MS20201	Balls, Bearing, Air Frame	MIL-B-7949		X		
MS20365	Nut, Self-Locking	AN-N-5				X
MS20392	Pin, Straight, Headed	MIL-P-5673		X	X	
MS20426	Rivet, Solid	MIL-R-5674			X	X
MS20427	Rivet, Solid	-			X	
MS20470	Rivet, Solid	MIL-R-5674				X
MS20760	Adapter, Straight	MIL-F-5509			X	
MS20819	Sleeve, Flared Tube Fitting	MIL-F-5509				X
MS21042	Nut, Self-Locking	MIL-N-25027	X	X	X	X
MS21044	Nut, Self-Locking	MIL-N-25027			X	X
MS21045	Nut, Self-Locking	MIL-N-25027		X		X
MS21060	Nut, Self-Locking	MIL-N-25027				X
MS21083	Nut, Self-Locking	MIL-N-25027			X	
MS21094	Bolt, Self-Locking	MIL-B-6812 MIL-F-18240				X
MS21097	Bolt, Self-Locking	MIL-S-7839 MIL-F-18240				X

TABLE III - Continued

Military Standard		Applicable MIL-Spec	Helicopter Applicability			
Number	Title	Number	AH-1G	UH-1H	CH-47A	CH-54A
MS21208	Insert, Screw Thread	MIL-I-8846		X	X	
MS21209	Insert, Screw Thread	MIL-I-8846	X	X	X	
MS21232	Bearing, Plain	MIL-B-8942	X			
MS21318	Screw	FF-S-107	X	X	X	
MS21900	Adapter, Flareless Tube to AN Flared Tube	MIL-F-18280			X	X
MS21902	Union, Flareless Tube	MIL-F-18280	X	X	X	X
MS21904	Elbow, Flareless Tube	MIL-F-18280				X
MS21905	Tee, Flareless Tube	MIL-F-18280	X	X	X	X
MS21906	Cross, Flareless Tube	MIL-F-18280			X	
MS21907	Elbow, Bulkhead	MIL-F-18280	X	X	X	X
MS21908	Elbow, Bulkhead	MIL-F-18280	X	X	X	X
MS21909	Tee, Bulkhead, Universal	MIL-F-18280	X	X	X	X
MS21910	Tee, Bulkhead, Flareless	MIL-F-18280	X	X	X	X
MS21911	Tee, Bulkhead, Flareless	MIL-F-18280	X	X	X	X
MS21912	Tee, Flareless	MIL-F-18280	X	X	X	X
MS21913	Plug, Flareless Tube	MIL-F-18280			X	X
MS21914	Cap, Pressure Seal	MIL-F-18280	X	X	X	
MS21915	Bushing, Screw Thread Expander	MIL-F-18280		X	X	X

TABLE III - Continued

Military Standard		Applicable MIL-Spec	Helicopter Applicability			
Number	Title	Number	AH-1G	UH-1H	CH-47A	CH-54A
MS21916	Reducer, External Thread, Flareless	MIL-F-18280	X	X	X	X
MS21920	Clamp Hose	MIL-C-8783			X	
MS21922	Sleeve, Coupling	MIL-F-18280		X		X
MS21924	Union, Flareless, Tube	MIL-F-18280	X	X	X	X
MS21926	Elbow, 90°, Universal	MIL-F-18280	X	X	X	X
MS21937	Nut, Cluster Fitting	MIL-F-18280		X	X	X
MS21938	Bolt, Cluster Fitting	MIL-F-18280		X	X	X
MS21939	Bolt, Cluster Fitting	MIL-F-18280			X	
MS21942	Body, Cluster Fitting	MIL-F-18280			X	
MS21944	Body, Cluster Fitting	MIL-F-18280			X	
MS21945	Body, Cluster Fitting	MIL-F-18280			X	
MS21949	Bolt, Cluster Fitting	MIL-F-5509				X
MS21950	Bolt, Cluster Fitting	MIL-F-6509				X
MS21951	Bolt, Cluster Fitting	MIL-F-6509				X
MS21954	Body, Cluster Fitting	MIL-F-5509				X
MS21959	Body, Cluster Fitting	MIL-F-5509		X	X	X
MS21960	Body, Cluster Fitting	MIL-F-5509			X	X

TABLE III - Continued

Military Standard		Applicable MIL-Spec	Helicopter Applicability			
Number	Title	Number	AH-1G	UH-1H	CH-47A	CH-54A
MS24335	Flange, Bulkhead, Mounting, Hydraulic	MIL-C-25427			X	
MS24376	Relay, 50 Amp	MIL-R-6106				X
MS24388	Tee, Flared, Tube	MIL-F-5509				X
MS24389	Tee, Flared, Tube	MIL-F-5509				X
MS24390	Tee, Flared, Tube	MIL-F-5509				X
MS24391	Plug, Bleeder	MIL-F-5509	X	X	X	X
MS24392	Union, Flared, Tube	MIL-F-5509	X			X
MS24393	Union, Flared, Tube	MIL-F-5509				X
MS24394	Elbow, Flared, Tube	MIL-F-5509				X
MS24395	Tee, Bulkhead	MIL-F-5509				X
MS24396	Elbow, Flared, Tube	MIL-F-5509				X
MS24397	Bushing	MIL-F-5509	X	X	X	X
MS24398	Bushing	MIL-F-5509	X	X	X	X
MS24399	Reducer, External Thread, Flared, Tube	MIL-F-5509	X		X	X
MS24400	Nut, Plain, Hex	MIL-F-5509	X	X	X	X
MS24401	Elbow, Flared, Tube	MIL-F-5509				X
MS24402	Tee, Flared, Tube	MIL-F-5509				X
MS24423	Valve, Check	MIL-V-25675		X	X	
MS24586	Spring, Helical	MIL-S-13572			X	
MS24665	Pin, Cotter	FF-P-386	X	X	X	X
MS24667	Screw, Cap, Socket	FF-S-86			X	

TABLE III - Continued

Military Standard		Applicable MIL-Spec	Helicopter Applicability			
Number	Title	Number	AH-1G	UH-1H	CH-47A	CH-54A
MS24671	Screw, Cap, Socket	FF-S-86			X	
MS24673	Screw, Cap, Socket Head	FF-S-86	X	X		
MS24690	Packing, Preformed	MIL-P-5516			X	X
MS25008	Switch, Sensitive	MIL-S-6743			X	
MS25083	Jumper Assy, Electric				X	
MS25226	Link, Terminal, Connecting	-				X
MS25227	Strip, Mounting Nut	-				X
MS27039	Screw, Machine	MIL-S-7839	X	X		X
MS27212	Terminal Board Assy	-				X
MS27363	Hose Assy	MIL-H-38360				X
MS27364	Hose Assy	MIL-H-38360				X
MS27365	Hose Assy	MIL-H38360				X
MS27369	Hose Assy	MIL-H38360			X	
MS27370	Hose Assy	MIL-H-38360			X	
MS27371	Hose Assy	MIL-H-38360		X	X	
MS28034	Bulb, Temp	MIL-B-7370B				X
MS28700	Accumulator	MIL-A-5498			X	
MS28720	Filter, Aircraft Hydraulics	MIL-F-5504		X		
MS28773	Retainer, Packing	MIL-R-8791	X	X		
MS28774	Retainer, Packing	MIL-R-8791	X	X	X	X
MS28775	Packing, Preformed	MIL-P-25732	X	X	X	X

TABLE III - Continued

Military Standard		Applicable MIL-Spec	Helicopter Applicability			
Number	Title	Number	AH-1G	UH-1H	CH-47A	CH-54A
MS28778	Packing, Preformed	MIL-P-5510 MIL-P-5510	X	X	X	X
MS28782	Retainer, Packing	MIL-R-8791			X	X
MS28783	Ring, Gasket	MIL-R-8791	X			
MS28889	Valve, Air	MIL-V-6164	X	X	X	X
MS28890	Valve, Hydraulic Check	MIL-V-5524		X		
MS28893	Valve, Hydraulic Relief	MIL-V-8813			X	
MS28895	Filter, Fluid, Pressure	MIL-F-8815				X
MS28895	Filter, Fluid, Pressure	MIL-F-8815				X
MS28932	Felt Strip, Packing Gland	C-F-206		X	X	
MS29512	Packing, Preformed	MIL-P-5315			X	
MS35206	Screw, Machine	FF-S-92	X		X	X
MS35207	Screw, Machine	FF-S-92	X	X	X	X
MS35214	Screw, Machine	FF-S-92			X	
MS35219	Screw, Machine	FF-S-92			X	
MS35265	Screw, Machine	FF-S-92			X	
MS35266	Screw, Machine	FF-S-92			X	
MS35275	Screw, Machine	FF-S-92	X		X	
MS35458	Screw, Cap	FF-S-86			X	
MS35489	Grommet, Rubber	MIL-G-3036	X	X	X	X
MS35649	Nut, Plain, Hex	FF-N-836		X		X
MS51963	Set Screw, Hex	FF-S-200			X	

TABLE III - Continued

Military Standard		Applicable MIL-Spec	Helicopter Applicability			
Number	Title	Number	AH-1G	UH-1H	CH-47A	CH-54A
MS87029	Hose Assy					
MS122116	Insert, Cres Helical	MIL-I-8846			X	
MS124696	Insert, Cres Helical, Coil, Fine Thread	MIL-I-8846			X	
MS134351	Ball, Corrosion Resistant Steel, Precision, Grade	-			X	
MS134352	Ball, Corrosion Resistant Steel, Precision, Grade	-		X		
MS134356	Ball, Corrosion Resistant Steel, Precision, Grade	-			X	
MS134378	Ball, Corrosion Resistant Steel, Precision, Grade	-			X	
MS150459	Ball, Steel, Grade 1	-			X	
MS219216	Reducer, Flareless	MIL-R-8572A				

DEPARTMENT OF DEFENSE INDEX OF SPECIFICATIONS AND STANDARDS

The hydraulic system components identified during the analysis of the helicopter TM's were then used as a basis for research of the DODISS for applicable hydraulic system and component specifications. The alphabetical DODISS was surveyed to determine all military and Federal specifications and standards applicable to that generic component type. Additionally, all processes, practices and procedures applicable to the design, quality assurance and testing of hydraulic and related systems were investigated in the DODISS.

AIRFRAME MANUFACTURERS AND COMPONENTS SUPPLIERS

For all applicable components for which a specific military or Federal specification could not be identified, written inquiry was directed to the parts supplier and the applicable helicopter manufacturer to obtain design data. These components are listed in Table IV. Those components highlighted by a check (√) have been identified as either a composite or a compound component, i.e., a type of component consisting of two or more basic elements.

Analysis of the data received from these sources revealed that the components identified were primarily commercial off-the-shelf items adapted for use by the U.S. Army. Many of these components were designed and built to commercial specifications which were equal to or exceeded equivalent military specifications. The composite/compound components/equipments were designed to more than one military specification to achieve a system functional requirement.

U.S. ARMY AVIATION SYSTEMS COMMAND

Design data were also sought from the U.S. Army Aviation Systems Command (AVSCOM), St. Louis, Missouri, for those component types for which applicable military specifications could not be identified. These data were supplied in the form of microfiche transparencies from which the military specifications used in some part of the design process were identified.

MANUFACTURERS' DETAILED DESIGN SPECIFICATIONS

Detailed design specifications for the Boeing-Vertol CH-47A and Sikorsky CH-54A helicopters were reviewed to ascertain all military specifications and standards used in the design of these helicopters.

DOCUMENTS NOT APPLICABLE

All documents that were reviewed but considered to be inapplicable to the design of Army helicopter hydraulic systems are shown in Appendix II. Rationale is provided for the inapplicability of each document so classified.

Documents that were valuable to the design of helicopter hydraulic systems but were not considered to be a hydraulic system document are shown in Appendix III. These documents are applicable to aircraft hardware, processes, packaging and inspection procedures.

TABLE IV. GENERIC COMPONENT TYPES WITHOUT APPLICABLE MILITARY SPECIFICATIONS

Helicopter Designation	Generic Component Types
UH-1D/H	Pressure Gage Liquid Sight Indicator Axial Piston Pump √ Hydraulic Module Assembly Hydraulic Solenoid Operator Valve √ Irreversible Valve Filter Differential Indicator Pressure Switch √ Hydraulic Servocylinder Airless Hydraulic Fluid Tank Hydraulic Accumulator Directional Valve
CH-47	Reciprocating Pump, Hand √ Hydraulic Fluid Cooler Linear Directional Flow Valve √ Hydraulic System Manifold
CH-54	Transmitter Assembly Gage Pressure Switch Thermostatic Switch Thermal Relief Valve Filter Variable Displacement Pump Regulating Valve Relief Valve √ Brake Assembly √ Manifold Assembly √ Hydraulic Servocylinder Assembly

√ Composite and/or compound components, i.e., a type of component consisting of two or more basic elements.

DOCUMENT DEFICIENCY ANALYSIS

This section presents the results of the analysis of military specifications pertaining to hydraulic systems, equipments, components and procedures. The pertinent documents identified during the data collection tasks as applicable to helicopter hydraulic systems were reviewed, with primary attention given to those areas that, by their deficiencies, have a potentially adverse effect on reliability and maintainability.

DOCUMENT DEFICIENCY CRITERIA

The criteria used to identify deficiencies in these documents were established by analyzing the specific requirements that should be considered by the designer to meet or exceed the operational parameters of U.S. Army helicopters.

The primary areas in each document that were reviewed for deficiencies were:

- Design Requirements
- Qualification Test Requirements, Procedures and Practices
- Quality Assurance Requirements and Provisions

Design Requirements

The philosophy and criteria used to analyze each document relative to design requirements are as follows:

1. Scope — Does the scope of the specification provide the designer with the types of applications for which the system, equipment or component is intended? If the specification is intended to apply only to ground-based applications, the operational stresses of a helicopter may exceed those provided by the specification. This could result in the component's prematurely failing because its operational parameters have been exceeded by use in the helicopter environment. On the other hand, if the intent of the specification is for a missile application, the design requirements may impose more than adequate reliability requirements, but the maintenance considerations may not be adequate for Army field use.

2. Performance — As with the scope, provisions must be made to ensure that the detailed operational requirements of the Army are considered by the designer. A mere listing of the performance parameters alone is not adequate unless these parameters are essentially the same as required by the operational use of the Army. A component or system can be built to meet or

exceed the specification performance requirements and fail to meet the operational reliability or maintainability requirements.

3. Standard Components – The requirement for the equipment and/or components to be on a Qualified Products List (QPL) is not always a realistic requirement. A component that is on a QPL may not be qualified for the requirements imposed by the US Army helicopter environment. Components not qualified to Army operational requirements may not meet Army maintenance considerations or may fail prematurely.

4. Environmental Conditions – The requirements that are expressed in the military specification must be those that are imposed by the mission. Requirements that are expressed in quantitative values without reference to the expected service parameters are considered inadequate. Vibratory and sandy conditions may cause excessive wear of components unless these factors are adequately considered during the design of the components.

5. Interchangeability – Interchangeability requirements should be included as a part of military specifications to ensure that replacement parts adequately interface with other equipment and/or components. Components that are not completely interchangeable may cause premature failures or maintenance-related problems.

6. Design/Construction – The design and construction of the item covered by military specifications must consider the projected operational parameters and environment to which the helicopter will be subjected. If inadequate consideration is given to such items as tolerances, materials, etc., the item may fail prematurely. If the Army maintenance environment is not adequately considered during design and construction, the operational maintainability of the item can be significantly degraded.

7. Product Identification – Requirements for properly marking/identifying the components and/or equipment are important with respect to maintainability. Inadequate marking of components contributes to both time loss and improper selection during maintenance actions.

8. Workmanship – This requirement is important in that poor workmanship during manufacture may cause early failure of items such as hydraulic components. Inadequately machined surfaces may permit dirt and other contaminants to enter a component and could cause excessive wear, jamming and other premature failures.

9. Safety – Safety is mandatory with respect to personnel and equipment. Equipment designed without consideration for the safety of the operator and/or maintenance personnel or other components of the system or related systems could adversely affect the availability, reliability, or maintainability of the system. Poor safety features necessitate increased precaution during maintenance, thus leading to lower availability.

10. Reliability – Reliability requirements stated in quantitative Mean-Time-Between-Failures (MTBF) values are not considered to be adequate. An adequate reliability requirement is one that is based on the projected mission requirements of the helicopter. Items designed to an MTBF value stated in a military specification may adversely affect the overall helicopter and/or system reliability requirement if the MTBF is not at least that required to meet the mission and/or system reliability.

11. Maintainability – Maintainability requirements must be stated with reference to the overall helicopter and/or system availability requirements. Consideration must also be given to the US Army maintenance concepts, procedures, and practices. If these parameters are not considered, the item may not be compatible with the Army system and the helicopter availability and maintenance rates may be adversely affected.

12. Human Engineering – Human engineering requirements must consider the parameters delineated in MIL-STD-1472. Consideration should also be given to US Army maintenance concepts, procedures, and practices. The absence of these considerations may have an adverse effect on the operational helicopter availability and maintenance rates.

13. Electromagnetic Interference – Provisions for eliminating electromagnetic interference must be included in all specifications for items that are electrically controlled, such as solenoid valves. False failures of the equipment induced by electromagnetic energy affecting the operation of the equipment will contribute to a lower reliability of the system.

Qualification Test Requirements, Procedures and Practices

The specific testing requirement criteria and philosophy used to conduct this analysis are as follows:

1. Environmental Testing – The procured item should be adequately tested in its intended environment in accordance with the procedures delineated in MIL-STD-810 and the detailed design specification. The effects of the environmental conditions, i.e., vibration, sand, and moisture, on the reliability of the item would identify inherent design weaknesses prior to the production phase in the life cycle.

2. System Compatibility Testing — The complete hydraulic system should be tested to ensure that all components used in the hydraulic system and interfaces with other related systems, such as the flight controls, are compatible with the system operational requirements. Components that are not compatible with the system may fail prematurely or cause premature failure of other components in the system.

3. Qualification Test Plan — A qualification test plan is required to ensure that the component meets or exceeds the design requirements imposed by the military and detailed design specifications.

4. Flight Test — Hydraulic systems and major component equipments, such as flight control servocylinders, should undergo testing that is representative of flight conditions to ensure that the hydraulic system will not fail due to inadequate design in relation to mission requirements.

5. Test Witness — Qualification test and subsequent sampling test should be observed by an authorized representative of the procuring agency. This test witness may be the Government representative at the contractor's facility unless the test requires special knowledge or expertise on the part of the Government observer.

6. Rejection and Retest — Those components failing the initial qualification test or subsequent sampling tests should be retested or may be considered as qualified by the procuring activity if a fix can be judged adequate to correct the deficiency. If the failure would necessitate a major redesign of the component prior to qualification or require a significant increase in sampling frequency, complete information should be furnished to the procuring agency.

7. Service Test — Service test is a requirement that should be imposed at the system and major component level. This test, in the form of a reliability and maintainability demonstration, is designed to identify system components that may degrade the system reliability and those that may require maintenance procedures different from those delineated in AR 750-1, "Army Material Maintenance Concepts and Policies, " dated May 1972.

Quality Assurance Requirements and Provisions

The quality assurance provisions that should be considered as a minimum are as follows:

1. Quality Assurance Provisions — Quality assurance is required to ensure that the component is subjected to quality assurance

provisions and standards that meet or exceed the requirements imposed by the military and detailed design specifications.

2. Packing and Shipping — Requirements must be imposed that detail packing and shipping requirements that protect the component from damage during shipment and storage. These requirements should consider the fragility of the component being procured by the specification.

3. Component Sampling — Component sampling procedures should be required for application of quality control checks. Infrequent sampling of components may allow defective items to be installed in hydraulic systems that will cause premature failure of the system.

4. Mandatory Inspection Points — Certain critical phases of the manufacture and assembly processes require in-process inspection by quality assurance personnel.

DOCUMENT ANALYSIS

The hydraulic system documents identified in Figures 17 through 21 were analyzed using the criteria and philosophy identified in the preceding discussion. This required a detailed analysis of each area identified as impacting the reliability and maintainability and/or the procedures and practices used to inspect and test the item being procured. Each document was analyzed to determine if ambiguities existed within it and conflicts between it and other controlling documents. The documents were categorized by generic component type with respect to the US Army baseline hydraulic system block diagram tree as shown in Figure 16.

The document provisions were then identified as being adequate or inadequate. The inadequate and nonexistent provisions were then rated as having one of the following impacts on the hydraulic system reliability, availability, and maintainability:

1. Major Impact — Those deficiencies which could result in a substantial degradation of the helicopter and hydraulic system reliability, availability, and/or maintainability.

2. Significant — Those deficiencies that could result in some degradation of the helicopter and hydraulic system reliability, availability, and/or maintainability.

3. Insignificant — Those deficiencies that may result in little or no degradation of the hydraulic system reliability, availability, and/or maintainability.

2. System Compatibility Testing — The complete hydraulic system should be tested to ensure that all components used in the hydraulic system and interfaces with other related systems, such as the flight controls, are compatible with the system operational requirements. Components that are not compatible with the system may fail prematurely or cause premature failure of other components in the system.

3. Qualification Test Plan — A qualification test plan is required to ensure that the component meets or exceeds the design requirements imposed by the military and detailed design specifications.

4. Flight Test — Hydraulic systems and major component equipments, such as flight control servocylinders, should undergo testing that is representative of flight conditions to ensure that the hydraulic system will not fail due to inadequate design in relation to mission requirements.

5. Test Witness — Qualification test and subsequent sampling test should be observed by an authorized representative of the procuring agency. This test witness may be the Government representative at the contractor's facility unless the test requires special knowledge or expertise on the part of the Government observer.

6. Rejection and Retest — Those components failing the initial qualification test or subsequent sampling tests should be retested or may be considered as qualified by the procuring activity if a fix can be judged adequate to correct the deficiency. If the failure would necessitate a major redesign of the component prior to qualification or require a significant increase in sampling frequency, complete information should be furnished to the procuring agency.

7. Service Test — Service test is a requirement that should be imposed at the system and major component level. This test, in the form of a reliability and maintainability demonstration, is designed to identify system components that may degrade the system reliability and those that may require maintenance procedures different from those delineated in AR 750-1, "Army Material Maintenance Concepts and Policies, " dated May 1972.

Quality Assurance Requirements and Provisions

The quality assurance provisions that should be considered as a minimum are as follows:

1. Quality Assurance Provisions — Quality assurance is required to ensure that the component is subjected to quality assurance

The document analysis is presented in Appendix IV of this volume. The documents reviewed included all amendments, revisions and supplements that were available during this analysis. These documents are presented in generic groups to facilitate understanding of the whole analysis process. A short description of each deficiency and its reliability, maintainability, and availability impact category are presented in a tabular format.

The summary results of the document analysis are shown as Table V. This analysis has shown that four documents can be considered adequate with respect to reliability and maintainability.

TABLE V. DOCUMENT DEFICIENCY MATRIX	
Parameter	% Deficient*
Design Requirements:	
• Performance	0.9
• Standard Components	33.7
• Environmental Conditions	63.5
• Interchangeability	39.4
• Design/Construction	5.8
• Product Identification	11.5
• Workmanship	27.9
• Safety	67.3
• Reliability	67.3
• Maintainability	71.1
• Human Engineering	79.8
• Electromagnetic Interference	10.6
Qualification Testing:	
• Environmental Test	76.0
• Qualification Test Plan	25.0
• Test Witness	8.6
• Qualification Retest	44.2
• Reliability Demonstration	70.2
• Maintainability Demonstration	68.3
Quality Assurance	
• Quality Assurance Provisions	14.4
• Packing and Shipping	4.8
• Sampling Criteria	26.0

*Deficiency percentage is based on the 104 hydraulic system related documents analyzed

ALTERNATIVE SELECTION ANALYSIS

The objective of the alternative selection analysis was to determine the feasible alternative for each document found deficient during the document deficiency analysis. These alternatives are intended to reduce or eliminate the potential adverse impact on reliability and maintainability attributed to deficient documents.

EVALUATION METHODOLOGY

The criteria used to evaluate and select the alternative to the deficient documents were established by analyzing the status of the documents, the specific deficiencies, the potential impact of the deficiencies on reliability and maintainability, and the availability of substitute documents. When two or more documents for the same component existed, either at the system, equipment, or component levels or any combination thereof, and an ambiguity in reliability and maintainability requirements was found to exist, the requirements to be imposed were then determined.

The document deficiency analyses shown in Appendix II of this volume established the degree of deficiency for each document. This in turn was correlated into the document action required to remove the inherent reliability and maintainability related deficiencies. Five alternatives were considered when reviewing each document related to helicopter hydraulic system:

No Action – Document is adequate without revision.

Minor Revision – Document has some deficiencies that have a significant adverse impact on reliability and maintainability.

Major Revision – Document has numerous deficiencies that have a significant adverse impact on reliability and maintainability and can be remedied by an extensive rewrite of the document.

Delete – Document has numerous deficiencies that have a significant adverse impact on reliability and maintainability and a substitute document is available. Also it will be deleted from further analysis.

Issue New Document – For those areas where no document is presently available for the generic classification, a document should be issued.

Also, where one or more documents are available, the document that best suits the reliability and maintainability requirements of the Army was identified.

ALTERNATIVE EVALUATION AND SELECTION

The alternative evaluation and selection of identified hydraulic system specifications were accomplished using the criteria established in the preceding "Evaluation Methodology" discussion. Using the generic classification groups previously established in this investigation, each generic class of documents is evaluated as to the action required by the Army to assure that the products procured by this document adequately impose helicopter reliability and maintainability requirements.

The alternative evaluation selection and supporting rationale for hydraulic system documents for each generic classification of hydraulic component is shown in columnar format in Figures 17, 18, 19, 20, and 21. Figure 17 is the analysis of the system level documents. Figure 18 displays the analysis for the equipment level documents for the hydraulic control subsystem. The equipment level documents for the hydraulic servocontrolled actuators and pressure generating subsystem are shown as Figures 19 and 20, respectively. Figure 21 displays the alternative document selection analysis for component level documents. The columnar headings used in this analysis are as follows:

Generic Classification — Generic classification of item controlled by document

Document Number — Military specification or standard number assigned to the document

Document Action — Action required for the document being analyzed

No Action

Minor Revision

Major Revision

Delete

Issue New Document

Preferred Document — The document has been found to contain the least reliability and maintainability related deficiencies and can be improved by use of the Supplemental Design Guide (Volume II of this report).

- ● Signifies the preferred approach found during the analysis
- o Signifies an alternative to the approach found during the analysis

Rationale — The supporting rationale for the selection action for each document

The summary of the document selection analysis is shown as Figure 22. This analysis has shown that nearly two-thirds of all the document and generic classifications considered required major revision to the documents. The recommendations for new documents are shown in the recommendation section of this volume. Recommendations to improve existing documents are shown in Volume II.

GENERIC CLASSIFICATION	DOCUMENT NUMBER	DOCUMENT ACTION	PREFERRED DOCUMENT	RATIONALE
Hydraulic System	MIL-HDBK-692 (MR)	None	o	Document is a guide for the selection of O-rings. Since this document does not directly pertain to the procurement of O-rings for hydraulic systems, no direct impact on reliability or maintainability is provided by this document.
	MIL-H-5440F	Major	●	This document is applicable to helicopter hydraulic systems. Promulgation of the supplemental design recommendations provided in Volume II of this report will remove the reliability and maintainability deficiencies that are inherent in the document.
	MIL-H-8775C	Major	●	This document is applicable to helicopter hydraulic components. Promulgation of the supplemental design recommendations provided in Volume II of this report will remove the reliability and maintainability deficiencies that are inherent in the document.
	MIL-H-8890	Major	o	This document is used only when Type III hydraulic systems are used. Promulgation of the supplemental design recommendations provided in Volume II of this report will remove the reliability and maintainability deficiencies that are inherent in the document.

Figure 17. Hydraulic System Document Alternative Selection Analysis.

GENERIC CLASSIFICATION	DOCUMENT NUMBER	DOCUMENT ACTION	PREFERRED DOCUMENT	RATIONALE
	MIL-H-8891	Major	o	This document is applicable only when Type III hydraulic systems are used. Promulgation of the supplemental design recommendations provided in Volume II of this report will remove the reliability and maintainability deficiencies that are inherent in the document.
	MIL-H-25475B	Delete		This document is used only for missile hydraulic systems.
	MIL-S-8698(ASG)	Minor	●	This document is applicable to helicopter structural design and was included only as a reference document.
	MIL-I-6181D	Delete		This document has been superseded by MIL-STD-461A.
	MIL-C-18244A (WEP)	Major	o	This document is applicable to helicopter automatic flight control systems and is directly related to helicopter hydraulic systems. Promulgation of the supplemental design recommendations provided in Volume II of this report will remove the reliability and maintainability deficiencies that are inherent in the document.

Figure 17 - Continued.

GENERIC CLASSIFICATION	DOCUMENT NUMBER	DOCUMENT ACTION	PREFERRED DOCUMENT	RATIONALE
Testing/ Demonstration Requirements	MIL-D-23222A (AS)	Major	o	This document is applicable only to U.S. Navy fixed- and rotary-wing aircraft. This document could be made applicable to U.S. Army helicopter requirements only through extensive changes to the document.
	MIL-T-5522C	Minor	●	This document is applicable to helicopter hydraulic system testing.
	MIL-E-5272C (ASG)	Delete		This document has been superseded by MIL-STD-810B.
	MIL-T-8679	Major	o	This document is applicable to ground test of helicopter systems.
Hydraulic Rubber Components	MIL-R-7362D	Major	o	This document is applicable only to hydraulic system rubber components. Significant changes must be incorporated in this document in order to remove the inherent reliability and maintainability document deficiencies noted during the analysis.

Figure 17 - Continued.

GENERIC CLASSIFICATION	DOCUMENT NUMBER	DOCUMENT ACTION	PREFERRED DOCUMENT	RATIONALE
Hydraulic Fluids	MIL-H-5606C	Minor	●	This document is applicable to helicopter hydraulic systems. Promulgation of the supplemental design recommendations provided in Volume II of this report will remove the reliability and maintainability deficiencies that are inherent in the document.
	MIL-H-6083C	Minor	o	This document is applicable only to ground tests on helicopter systems. Promulgation of the supplemental design recommendations provided in Volume II of this report will remove the reliability and maintainability deficiencies that are inherent in the document.
	MIL-H-8446B	Minor	o	This document is applicable only to helicopter hydraulic systems using nonpetroleum base fluids. Promulgation of the supplemental design recommendations provided in Volume II of this report will remove the reliability and maintainability deficiencies that are inherent in the document.

Figure 17 - Continued.

GENERIC CLASSIFICATION	DOCUMENT NUMBER	DOCUMENT ACTION	PREFERRED DOCUMENT	RATIONALE
	MIL-H-83282	Major	o	This document is not applicable to U.S. Army helicopter hydraulic systems. Only the U.S. Air Force has approved the use of this document. Promulgation of the supplemental design recommendations provided in Volume II of this report will remove the reliability and maintainability deficiencies that are inherent in the document. However, other types of testing will be required in order to approve fluids supplied under this specification for U.S. Army use.

Figure 17 - Continued.

GENERIC CLASSIFICATION	DOCUMENT NUMBER	DOCUMENT ACTION	PREFERRED DOCUMENT	RATIONALE
Electro-hydraulic Controls	MIL-V-27162	Major	●	This document is applicable to helicopter electrohydraulic control systems. Promulgation of the supplemental design recommendations provided in Volume II of this report will remove the reliability and maintainability deficiencies that are inherent in the document.
	MIL-H-8775C	Major	o	This is a supplemental document used in the design of electrohydraulic system controls.
Trim Valves	MIL-V-5529A	Major	●	This document is applicable to the design of hydraulic trim valves. Promulgation of the supplemental design recommendations provided in Volume II of this report will remove the reliability and maintainability deficiencies that are inherent in the document.
Electrical Controls	MIL-B-5087B (ASG)	Minor	●	This document is applicable to the design of bonding of electrical systems. Promulgation of the supplemental design recommendations provided in Volume II of this report will remove the reliability and maintainability deficiencies that are inherent in the document.

Figure 18. Hydraulic Control Subsystem Document Alternative Selection Analysis.

GENERIC CLASSIFICATION	DOCUMENT NUMBER	DOCUMENT ACTION	PREFERRED DOCUMENT	RATIONALE
	MIL-W-5088E	Minor	●	This document is applicable to the design and selection of electrical wiring. Promulgation of the supplemental design recommendations provided in Volume II of this report will remove the reliability and maintainability deficiencies that are inherent in the document.
	MIL-E-7080B	Major	o	This document is applicable only to the selection and installation of electronic equipment. This document could be used for the selection of solenoids for solenoid valves. Promulgation of the supplemental design recommendations provided in Volume II of this report will remove the reliability and maintainability deficiencies that are inherent in the document.
Solenoid Valve	MIL-V-46720 (ORD)	Delete and Issue New Document		This document is not intended for aircraft or helicopter use.
Pressure Switch	MIL-S-8932	Major	●	This document is applicable to the design of pressure switches for hydraulic systems. Promulgation of the supplemental design recommendations provided in Volume II of this report will remove the reliability and maintainability deficiencies that are inherent in the document.

Figure 18 - Continued.

GENERIC CLASSIFICATION	DOCUMENT NUMBER	DOCUMENT ACTION	PREFERRED DOCUMENT	RATIONALE
Temperature Switch	MIL-T-7990B	Major	●	This document is applicable to the design of temperature sensing switches for hydraulic systems. Promulgation of the supplemental design recommendations provided in Volume II of this report will remove the reliability and maintainability deficiencies that are inherent in the document.
Hydraulic Controls	None	Issue New Document		No specific document is provided for hydraulic controls. However, hydraulic control designs are generally governed by MIL-H-5440F, MIL-H-8775C, and MIL-H-8890.
Hydraulic Manifold Assembly	None	Issue New Document		No specific document is provided for hydraulic manifold assemblies. Hydraulic manifold assemblies found to exist in the inventory appear to be made up of two or more generic classes of components such as filters, check valves, pressure regulating valves, etc. A governing specification for such composite types of equipment should be issued.

Figure 18 - Continued.

GENERIC CLASSIFICATION	DOCUMENT NUMBER	DOCUMENT ACTION	PREFERRED DOCUMENT	RATIONALE
Manual Control Valves	None	Issue New Document		No specific document is provided for hydraulic manual control valves. These manual control valve designs are generally governed by MIL-H-8775C and MIL-H-8890.
Sequence Valves	None	Issue New Document		No specific document is provided for sequencing valves. Sequencing valve designs are generally governed by MIL-H-8875C and MIL-H-8890.
Priority Valves	None	Issue New Document		No specific document is provided for hydraulic priority valves. Priority valve designs are generally governed by MIL-H-8775C and MIL-H-8890.
Shuttle Valves	MIL-V-5530B	Major	•	This document is applicable to the design of Type I shuttle valves for hydraulic systems. Promulgation of the supplemental design recommendations provided in Volume II of this report will remove the reliability and maintainability deficiencies that are inherent in the document.

Figure 18 - Continued.

GENERIC CLASSIFICATION	DOCUMENT NUMBER	DOCUMENT ACTION	PREFERRED DOCUMENT	RATIONALE
	MIL-V-19068A (ASG)	Major	●	This document is applicable to the design of Type II hydraulic shuttle valves. Promulgation of the supplemental design recommendations provided in Volume II of this report will remove the reliability and maintainability deficiencies that are inherent in the document.
Flow Regulators	MIL-V-25517A (ASG)	Major	●	This document is applicable to the design of hydraulic flow restrictors. Promulgation of the supplemental design recommendations provided in Volume II of this report will remove the reliability and maintainability deficiencies that are inherent in the document.
	MIL-V-8566A	Major	●	This document is applicable to the design of hydraulic flow regulators. Promulgation of the supplemental design recommendations provided in Volume II of this report will remove the reliability and maintainability deficiencies that are inherent in the document.

Figure 18 - Continued.

GENERIC CLASSIFICATION	DOCUMENT NUMBER	DOCUMENT ACTION	PREFERRED DOCUMENT	RATIONALE
Hydraulic Fuse	MIL-F-5508B	Major	●	This document is applicable to the design of hydraulic fuses. Promulgation of the supplemental design recommendations provided in Volume II of this report will remove the reliability and maintainability deficiencies that are inherent in the document.
Pneumatic Controls	MIL-P-5518C	Minor	●	This document is applicable to the design of pneumatic controls. Promulgation of the supplemental design recommendations provided in Volume II of this report will remove the reliability and maintainability deficiencies that are inherent in the document.
	MIL-P-8564D	Major	o	This document is applicable to the design of pneumatic system components. Promulgation of the supplemental design recommendations provided in Volume II of this report will remove the reliability and maintainability deficiencies that are inherent in the document.

Figure 18 - Continued.

GENERIC CLASSIFICATION	DOCUMENT NUMBER	DOCUMENT ACTION	PREFERRED DOCUMENT	RATIONALE
Air Reservoirs	MIL-R-8573A (ASG)	Major	●	This document is applicable to the design of nonshatterable steel air reservoirs. Promulgation of the supplemental design recommendations provided in Volume II of this report will remove the reliability and maintainability deficiencies that are inherent in the document.
	MIL-T-25363C	Minor	●	This document is applicable to the design of fiberglass air reservoirs. Promulgation of the supplemental design recommendations provided in Volume II of this report will remove the reliability and maintainability deficiencies that are inherent in the document.
Valve Cylinder	MIL-C-8838 (ASG)	Major	●	This document is applicable to the design of pneumatic actuating cylinders. Promulgation of the supplemental design recommendations provided in Volume II of this report will remove the reliability and maintainability deficiencies that are inherent in the document.

Figure 18 - Continued.

GENERIC CLASSIFICATION	DOCUMENT NUMBER	DOCUMENT ACTION	PREFERRED DOCUMENT	RATIONALE
Pneumatic Pressure Reducers	MIL-R-8572A (Aer)	Major	●	This document is applicable to the design of pneumatic pressure reducers. Promulgation of the supplemental design recommendations provided in Volume II of this report will remove the reliability and maintainability deficiencies that are inherent in the document.
Shuttle Valves	MIL-V-5530B	Major	●	This document is applicable to Type I hydraulic shuttle valves. Promulgation of the supplemental design recommendations provided in Volume II of this report will remove the reliability and maintainability deficiencies that are inherent in the document.
	MIL-V-19068A	Major	●	This document is applicable to the design of Type II hydraulic shuttle valves. Promulgation of the supplemental design recommendations provided in Volume II of this report will remove the reliability and maintainability deficiencies that are inherent in the document.

Figure 18 - Continued.

GENERIC CLASSIFICATION	DOCUMENT NUMBER	DOCUMENT ACTION	PREFERRED DOCUMENT	RATIONALE
Hydraulic Actuators	MIL-C-5503C	Major	•	This document is applicable to the design of hydraulic actuating cylinders. Promulgation of the supplemental design recommendations provided in Volume II of this report will remove the reliability and maintainability deficiencies that are inherent in the document.
Servo-controlled Hydraulic Actuators	None	Issue New Document		No specific document is provided for hydraulic servocontrolled actuators. Hydraulic servocontrolled actuators are governed by MIL-C-5503C and MIL-V-7915. Additionally, these servocontrolled actuator designs are generally governed by MIL-H-8775C and MIL-H-8890.
Auxiliary Hydraulic Actuators	None	Issue New Document		No specific document is provided for auxiliary servocylinders. Auxiliary servocylinders are governed by MIL-C-5503C and MIL-V-7915. Additionally, these auxillary servocylinder designs are generally governed by MIL-H-8775C and MIL-H-8890.

Figure 19. Hydraulic Servo Subsystem Document Alternative Selection Analysis.

GENERIC CLASSIFICATION	DOCUMENT NUMBER	DOCUMENT ACTION	PREFERRED DOCUMENT	RATIONALE
Control Boost Actuators	None	Issue New Document		No specific document is provided for control boosts. Control boosts are governed by MIL-C-5503C and MIL-V-7915. Additionally, these control boosts are generally governed by MIL-H-8775C and MIL-H-8890.
Accessory Hydraulic Actuating Cylinders	MIL-C-5503C	Delete, Issue New Document		This document is applicable only to the design of the actuating device itself. The servo portions for these actuators are governed by MIL-V-7915.
Hydraulically Actuated Brakes	MIL-B-8584C	Major	o	This document is applicable to hydraulically actuated brake systems for aircraft. Promulgation of the supplemental design recommendations provided in Volume II of this report will remove the reliability and maintainability deficiencies that are inherent in the document.
Wheel Brakes	MIL-W-5013H	Major	●	This document is applicable to the design of hydraulically actuated brake assemblies. Promulgation of the supplemental design recommendations provided in Volume II of this report will remove the reliability and maintainability deficiencies that are inherent in the document.

Figure 19 - Continued.

GENERIC CLASSIFICATION	DOCUMENT NUMBER	DOCUMENT ACTION	PREFERRED DOCUMENT	RATIONALE
	MIL-C-14055C	Delete		The document is not applicable to aircraft or helicopters.
	MIL-V-5525C	Major	●	This document is applicable to the design of aircraft power brake valves. Promulgation of the supplemental design recommendations provided in Volume II of this report will remove the reliability and maintainability deficiencies that are inherent in the document.
Hydraulic Rotor Brake System	None	Issue New Document		No specific document is provided for hydraulic rotor brake subsystems. The rotor brake subsystem components are generally covered by MIL-B-8584C, MIL-H-8775 and MIL-H-8890.
Linear Valves	None	Issue New Document		No specific document is provided for linear valves. These valves were governed by MIL-V-7915 until document was deleted in November 1972.
Irreversible Valves	None	Issue New Document		No specific document is provided for the design of hydraulic irreversible valves. Irreversible valves as used with hydraulic servoactuators are generally controlled by MIL-H-8775C and MIL-H-8890. A governing specification should be issued for this composite type of hydraulic equipment.

Figure 19 - Continued.

GENERIC CLASSIFICATION	DOCUMENT NUMBER	DOCUMENT ACTION	PREFERRED DOCUMENT	RATIONALE
Hydraulic Motors	None	Issue New Document		No specific document is provided for hydraulic motors. Hydraulic motors are generally covered by MIL-H-8775C and MIL-H-8890. Specific applications of hydraulic motors are covered by other specifications.
Hydraulic Engine Starting Motors	MIL-S-22999A (WEP)	Major	•	This document is applicable to the design of hydraulic engine starting motors. Promulgation of the supplemental design recommendations provided in Volume Ii of this report will remove the reliability and maintainability deficiencies that are inherent in the document.
Hydraulic Accessory Drive Units	MIL-M-7997A	Major	•	This document is applicable to the design of hydraulic motors for accessory drives. Promulgation of the supplemental design recommendations provided in Volume II of this report will remove the reliability and maintainability deficiencies that are inherent in the document.

Figure 19 - Continued.

GENERIC CLASSIFICATION	DOCUMENT NUMBER	DOCUMENT ACTION	PREFERRED DOCUMENT	RATIONALE
Pressure Generating Subsystem	None	Issue New Document		No specific document is provided for the hydraulic pressure generating system. All components within the subsystem are generally governed by MIL-H-8775C and MIL-H-8890.
Hydraulic Reservoirs	MIL-R-5520C	Major	•	This document is applicable to hydraulic nonseparated reservoirs. Promulgation of the supplemental design recommendations provided in Volume II of this report will remove the reliability and maintainability deficiencies that are inherent in the document.
	MIL-R-8931	Major	•	This document is applicable to the design of separated type hydraulic reservoirs. Promulgation of the supplemental design recommendations provided in Volume II of this report will remove the reliability and maintainability deficiencies that are inherent in the document.

Figure 20. Hydraulic Pressure Subsystem Document Alternative Selection Analysis.

GENERIC CLASSIFICATION	DOCUMENT NUMBER	DOCUMENT ACTION	PREFERRED DOCUMENT	RATIONALE
Hydraulic Accumulators	MIL-A-8897A	Major	o	This document is applicable to the design of hydraulic accumulators for Type II hydraulic systems. Promulgation of the supplemental design recommendations provided in Volume II of this report will remove the reliability and maintainability deficiencies that are inherent in the document.
	MIL-A-5498C (ASG)	Major	●	This document is applicable to the design of hydropneumatic pressure accumulators. Promulgation of the supplemental design recommendations provided in Volume II of this report will remove the reliability and maintainability deficiencies that are inherent in the document.
	MIL-A-52689 (NE)	Delete		This document is not intended for aircraft or helicopter use.
Hydraulic Pumps	None	Issue New Document		No specification document is provided for the design of hydraulic pumps. Specifications are available for the design of specific types of hydraulic pumps, i.e., manual and driven. Hydraulic pumps are generally governed by MIL-H-8775C and MIL-H-8890.

Figure 20 - Continued.

GENERIC CLASSIFICATION	DOCUMENT NUMBER	DOCUMENT ACTION	PREFERRED DOCUMENT	RATIONALE
Hydraulic Manual Pumps	MIL-P-5515C	Major	●	This document is applicable to the design of manual hydraulic pumps. Promulgation of the supplemental design recommendations provided in Volume II of this report will remove the reliability and maintainability deficiencies that are inherent in the document.
	MIL-C-6026B	Major	o	This document is applicable to manual hydraulic brake pumps. Promulgation of the supplemental design recommendations provided in Volume II of this report will remove the reliability and maintainability deficiencies that are inherent in the document.
Hydraulic Driven Pumps	MIL-P-19692B	Major	●	This document is applicable to the design of hydraulic variable delivery pumps. Promulgation of the supplemental design recommendations provided in Volume II of this report will remove the reliability and maintainability deficiencies that are inherent in the document.

Figure 20 - Continued.

GENERIC CLASSIFICATION	DOCUMENT NUMBER	DOCUMENT ACTION	PREFERRED DOCUMENT	RATIONALE
	MIL-P-7858	Major	●	This document is applicable to the design of fixed displacement hydraulic-power-driven pumps. Promulgation of the supplemental design recommendations provided in Volume II of this report will remove the reliability and maintainability deficiencies that are inherent in the document.
	MIL-P-5994C	Major	●	This document is applicable to the design of electric-motor-driven hydraulic pumps. Promulgation of the supplemental design recommendations provided in Volume II of this report will remove the reliability and maintainability deficiencies that are inherent in the document.
Hydraulic Filters	MIL-F-5504B	Major	o	This document is applicable to the design of micronic type hydraulic filters. Promulgation of the supplemental design recommendations provided in Volume II of this report will remove the reliability and maintainability deficiencies that are inherent in the document.

Figure 20 - Continued.

GENERIC CLASSIFICATION	DOCUMENT NUMBER	DOCUMENT ACTION	PREFERRED DOCUMENT	RATIONALE
	MIL-F-8815C	Major	●	This document is applicable to the design of hydraulic filters for Type II systems. Promulgation of the supplemental design recommendations provided in Volume II of this report will remove the reliability and maintainability deficiencies that are inherent in the document.
	MIL-F-27656B	Delete		This document is not intended for aircraft or helicopter use.
Relief Valve	MIL-V-5523C	Minor	●	This document is applicable to the design of hydraulic pressure relief valves. Promulgation of the supplemental design recommendations provided in Volume II of this report will remove the reliability and maintainability deficiencies that are inherent in the document.
	MIL-V-8813 (ASG)	Major	o	This document is applicable to the design of hydraulic pressure relief valves for Type II systems only. Promulgation of the supplemental design recommendations provided in Volume II of this report will remove the reliability and maintainability deficiencies that are inherent in the document.

Figure 20 - Continued.

GENERIC CLASSIFICATION	DOCUMENT NUMBER	DOCUMENT ACTION	PREFERRED DOCUMENT	RATIONALE
	MIL-V-5527A	Minor	●	This document is applicable to the design of hydraulic thermal relief valves. Promulgation of the supplemental design recommendations provided in Volume II of this report will remove the reliability and maintainability deficiencies that are inherent in the document.
	MIL-V-5519C	Major	●	This document is applicable to the design of hydraulic unloading valves. Promulgation of the supplemental design recommendations provided in Volume II of this report will remove the reliability and maintainability deficiencies that are inherent in the document.
Hydraulic Pressure Reducers	None	Issue New Document		No specific document is provided for hydraulic pressure reducers. These reducers are generally governed by MIL-H-8775C and MIL-H-8890.

Figure 20 - Continued.

GENERIC CLASSIFICATION	DOCUMENT NUMBER	DOCUMENT ACTION	PREFERRED DOCUMENT	RATIONALE
Hydraulic Check Valves	MIL-V-19067A (ASG)	Major	o	This document is applicable to hydraulic controllable check valves for Type II systems only. Promulgation of the supplemental design recommendations provided in Volume II of this report will remove the reliability and maintainability deficiencies that are inherent in the document.
	MIL-V-5528A	Minor	●	This document is applicable to hydraulic controllable check valves. Promulgation of the supplemental design recommendations provided in Volume II of this report will remove the reliability and maintainability deficiencies that are inherent in the document.
	MIL-V-19069A (ASG)	Major	o	This document is applicable to hydraulic check valves for Type II systems. Promulgation of the supplemental design recommendations provided in Volume II of this report will remove the reliability and maintainability deficiencies that are inherent in the document.
	MIL-V-5524B	Minor	o	This document is applicable to the design of hydraulic check valves for Type I systems. Promulgation of the supplemental design recommendations provided in Volume II of this report will remove the reliability and maintainability deficiencies that are inherent in the document.

Figure 20 - Continued.

GENERIC CLASSIFICATION	DOCUMENT NUMBER	DOCUMENT ACTION	PREFERRED DOCUMENT	RATIONALE
	MIL-V-25675B	Major	●	This document is applicable to the design of miniature hydraulic check valves. Promulgation of the supplemental design recommendations provided in Volume II of this report will remove the reliability and maintainability deficiencies that are inherent in the document.
Hydraulic Heat Exchangers	MIL-C-25478	Major	o	This document is applicable to oil coolers for aircraft engines. The use of this document without major revisions is considered inadequate due to its incompatibility with hydraulic fluids and requirements.
	MIL-C-5637B	Major	o	This document is applicable to oil coolers for aircraft engines. The use of this document without major revisions is considered inadequate due to its incompatibility with hydraulic fluids and requirements.

Figure 20 - Continued.

GENERIC CLASSIFICATION	DOCUMENT NUMBER	DOCUMENT ACTION	PREFERRED DOCUMENT	RATIONALE
Hydraulic Hoses and Tubing	MIL-H-8794D	Major	●	This document is applicable to hydraulic hoses. Promulgation of the supplemental design recommendations provided in Volume II of this report will remove the reliability and maintainability deficiencies that are inherent in the document.
	MIL-H-8795B	Major	●	This document is applicable to hydraulic hose assemblies. Promulgation of the supplemental design recommendations provided in Volume II of this report will remove the reliability and maintainability deficiencies that are inherent in the document.
	MIL-H-8788B	Major	●	This document is applicable to the design of high-pressure hydraulic hoses. Promulgation of the supplemental design recommendations provided in Volume II of this report will remove the reliability and maintainability deficiencies that are inherent in the document.
	MIL-H-8790C	Major	●	This document is applicable to the design of hydraulic rubber hose assemblies for high-pressure system. Promulgation of the supplemental design recommendations provided in Volume II of this report will remove the reliability and maintainability deficiencies that are inherent in the document.

Figure 21. Hydraulic System Component Document Alternative Selection Analysis.

GENERIC CLASSIFICATION	DOCUMENT NUMBER	DOCUMENT ACTION	PREFERRED DOCUMENT	RATIONALE
	MIL-H-27267A	Major	o	This document is applicable only to tetrafluoroethylene hydraulic hoses for medium-pressure systems. Promulgation of the supplemental design recommendations provided in Volume II of this report will remove the reliability and maintainability deficiencies that are inherent in the document.
	MIL-H-25579C	Major	o	This document is applicable to the design of tetrafluoroethylene hydraulic hose assemblies for medium-pressure systems. Promulgation of the supplemental design recommendations provided in Volume II of this report will remove the reliability and maintainability deficiencies that are inherent in the document.
	MIL-H-38360A	Major	●	This document is applicable to the design of tetrafluoroethylene hydraulic hose assemblies for high-pressure systems. Promulgation of the supplemental design recommendations provided in Volume II of this report will remove the reliability and maintainability deficiencies that are inherent in the document.

Figure 21 - Continued.

GENERIC CLASSIFICATION	DOCUMENT NUMBER	DOCUMENT ACTION	PREFERRED DOCUMENT	RATIONALE
	MIL-T-7081D (ASG)	Major	o	This document is applicable only to seamless tubing for aircraft hydraulic systems. Promulgation of the supplemental design recommendations provided in Volume II of this report will remove the reliability and maintainability deficiencies that are inherent in the document.
	MIL-T-6845C	Major	●	This document is applicable to corrosion-resistant hydraulic tubing. Promulgation of the supplemental design recommendations provided in Volume II of this report will remove the reliability and maintainability deficiencies that are inherent in the document.
	MIL-T-8504A	Major	o	This document is applicable to corrosion-resistant tubing for hydraulic systems. Promulgation of the supplemental design recommendations provided in Volume II of this report will remove the reliability and maintainability deficiencies that are inherent in the document.

Figure 21 - Continued.

GENERIC CLASSIFICATION	DOCUMENT NUMBER	DOCUMENT ACTION	PREFERRED DOCUMENT	RATIONALE
	MIL-T-8808A (ASG)	Major	●	This document is applicable to corrosion-resistant hydraulic tubing. Promulgation of the supplemental design recommendations provided in Volume II of this report will remove the reliability and maintainability deficiencies that are inherent in the document.
Marking/ Identification Tape	MIL-T-9906A	None	●	This document is applicable to the non-corrosive marking and identification tape used in hydraulic systems.
	MIL-STD-1247B	None	o	This document is applicable to the standardized marking used for hydraulic systems.
Pneumatic Components	MIL-V-6164C	Major	●	This document is applicable to the design of high-pressure pneumatic valves. Promulgation of the supplemental design recommendations provided in Volume II of this report will remove the reliability and maintainability deficiencies that are inherent in the document.

Figure 21 - Continued.

GENERIC CLASSIFICATION	DOCUMENT NUMBER	DOCUMENT ACTION	PREFERRED DOCUMENT	RATIONALE
	MIL-R-8572A (Aer)	Major	●	This document is applicable to the design of pneumatic pressure reducers. Promulgation of the supplemental design recommendations provided in Volume II of this report will remove the reliability and maintainability deficiencies that are inherent in the document.
Hydraulic Pressure Indicators	MIL-G-23337 (WEP)	Major	●	This document is applicable to the design of hydraulic pressure indicators. Promulgation of the supplemental design recommendations provided in Volume II of this report will remove the reliability and maintainability deficiencies that are inherent in the document.
Scraper Rings	MIL-S-5049B	Major	●	This document is applicable to the design of piston rod scraper rings. Promulgation of the supplemental design recommendations provided in Volume II of this report will remove the reliability and maintainability deficiencies that are inherent in the document.

Figure 21 - Continued.

GENERIC CLASSIFICATION	DOCUMENT NUMBER	DOCUMENT ACTION	PREFERRED DOCUMENT	RATIONALE
Hydraulic Packing Backup Rings	MIL-R-8791C	Major	●	This document is applicable to the design of hydraulic packing retainer rings. Promulgation of the supplemental design recommendations provided in Volume II of this report will remove the reliability and maintainability deficiencies that are inherent in the document.
Hydraulic Packing	MIL-G-5514F	Major	●	This document is applicable to the design of hydraulic gland packing seals. Promulgation of the supplemental design recommendations provided in Volume II of this report will remove the reliability and maintainability deficiencies that are inherent in the document.
	MIL-P-5516C	Major	●	This document is applicable to the design of preformed hydraulic packing gland seals. Promulgation of the supplemental design recommendations provided in Volume II of this report will remove the reliability and maintainability deficiencies that are inherent in the document.

Figure 21 - Continued.

GENERIC CLASSIFICATION	DOCUMENT NUMBER	DOCUMENT ACTION	PREFERRED DOCUMENT	RATIONALE
	MIL-P-25732B	Major	o	This document is applicable to the design of preformed hydraulic packing rings for high-temperature systems. Promulgation of the supplemental design recommendations provided in Volume II of this report will remove the reliability and maintainability deficiencies that are inherent in the document.
	MIL-P-5315B	Delete		This document does not pertain to hydraulic systems.
	MIL-P-5510B	Major	●	This document is applicable to the design of preformed packing. Promulgation of the supplemental design recommendations provided in Volume II of this report will remove the reliability and maintainability deficiencies that are inherent in the document.
Bearings	MIL-B-1083C	Minor	●	This document is applicable to the design of ball bearings for use in valves. Promulgation of the supplemental design recommendations provided in Volume II of this report will remove the reliability and maintainability deficiencies that are inherent in the document.

Figure 21 - Continued.

GENERIC CLASSIFICATION	DOCUMENT NUMBER	DOCUMENT ACTION	PREFERRED DOCUMENT	RATIONALE
	MIL-B-5687C	Major	●	This document is applicable to the design of thrust sleeve bearings. Promulgation of the supplemental design recommendations provided in Volume II of this report will remove the reliability and maintainability deficiencies that are inherent in the document.
	MIL-B-6039C	Major	●	This document is applicable to the design of rod end bearings. Promulgation of the supplemental design recommendations provided in Volume II of this report will remove the reliability and maintainability deficiencies that are inherent in the document.
	MIL-B-7949D	Major	●	This document is applicable to the design of antifriction ball bearings. Promulgation of the supplemental design recommendations provided in Volume II of this report will remove the reliability and maintainability deficiencies that are inherent in the document.

Figure 21 - Continued.

GENERIC CLASSIFICATION	DOCUMENT NUMBER	DOCUMENT ACTION	PREFERRED DOCUMENT	RATIONALE
	MIL-B-8942A	Major	●	This document is applicable to the design of TFE rod end bearings. Promulgation of the supplemental design recommendations provided in Volume II of this report will remove the reliability and maintainability deficiencies that are inherent in the document.
Inserts	MIL-I-45914	Minor	●	This document is applicable to the design of inserts. Promulgation of the supplemental design recommendations provided in Volume II of this report will remove the reliability and maintainability deficiencies that are inherent in the document.
	MIL-I-8846A	Minor	o	This document is applicable to the design of heli-coil design inserts. Promulgation of the supplemental design recommendations provided in Volume II of this report will remove the reliability and maintainability deficiencies that are inherent in the document.

Figure 21 - Continued.

GENERIC CLASSIFICATION	DOCUMENT NUMBER	DOCUMENT ACTION	PREFERRED DOCUMENT	RATIONALE
Hydraulic Fittings	MIL-A-5070D	Major	o	This document is applicable to the design of hydraulic hose-to-tube adapters. Promulgation of the supplemental design recommendations provided in Volume II of this report will remove the reliability and maintainability deficiencies that are inherent in the document.
	MIL-F-3541B	Minor	o	This document is applicable only to the design of lubrication fittings.
	MIL-F-5509B	Minor	●	This document is applicable to the design of flared tube fittings. Promulgation of the supplemental design recommendations provided in Volume II of this report will remove the reliability and maintainability deficiencies that are inherent in the document.
	MIL-F-18280C	Major	●	This document is applicable to the design of flareless tube fittings. Promulgation of the supplemental design recommendations provided in Volume II of this report will remove the reliability and maintainability deficiencies that are inherent in the document.

Figure 21 - Continued.

GENERIC CLASSIFICATION	DOCUMENT NUMBER	DOCUMENT ACTION	PREFERRED DOCUMENT	RATIONALE
	MIL-F-27272A	Major	o	This document is applicable to the design of tetrafluoroethylene hose fittings. Promulgation of the supplemental design recommendations provided in Volume II of this report will remove the reliability and maintainability deficiencies that are inherent in the document.
	MIL-J-5513B	Major	●	This document is applicable to the design of hydraulic swivel joints. Promulgation of the supplemental design recommendations provided in Volume II of this report will remove the reliability and maintainability deficiencies that are inherent in the document.

Figure 21 - Continued.

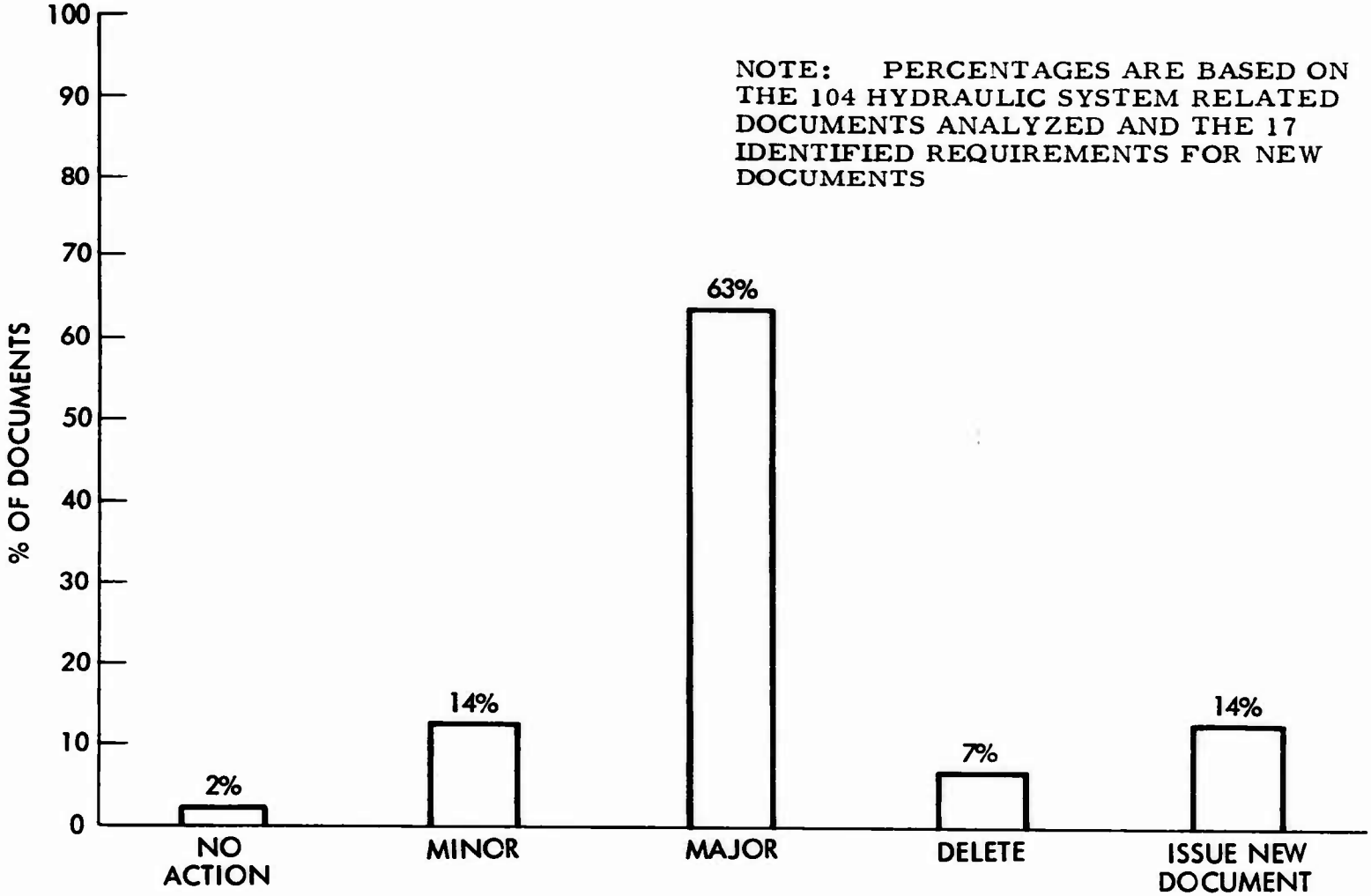

Figure 22. Document Alternative Selection Comparison.

CONCLUSIONS

The most salient point indicated by the hydraulic system documents analyzed in support of this investigation is that the documents do not adequately consider the requirements of the US Army mission with respect to reliability and maintainability. The scope of this study precluded the gathering of failure and repair rate data; consequently, no direct correlation could be made between the document deficiencies and the operational reliability and availability of US Army helicopters. However, document deficiencies have a significant potential impact on helicopter reliability and availability. In some instances the competitive procurements coupled with the integrity of the supplier and the detailed design specification requirements for the helicopter and hydraulic systems have negated the effect of these document deficiencies.

The results of this investigation revealed that of the 104 inadequate hydraulic system documents:

- 67.3% – Reliability requirements were deficient
- 71.1% – Maintainability requirements were deficient
- 70.2% – Reliability demonstration requirements were deficient
- 68.3% – Maintainability demonstration requirements were deficient

Of these 104 documents, only three documents can be considered adequate with respect to reliability and maintainability. Additionally, it was noted that several generic classes of components used in current inventory Army helicopters were not covered by military specifications. Some of these components were classified as composite components that include two or more components designed into one item of hardware to perform a discrete function. These composite components usually were designed to two or more military specifications; e.g., check valve and relief valve.

RECOMMENDATIONS

The analysis of the hydraulic system documentation performed during this study has identified three specific classes of recommendations:

- Supplemental design information
- New document requirements
- No action required

SUPPLEMENTAL DESIGN INFORMATION

It is recommended that the supplemental design information as presented in Volume II of this report be appended to all future detailed and system specifications. This information was generated in direct response to reliability and maintainability related document deficiencies noted during the analyses of the hydraulic system related documents. This information may also be used to revise the existing military documents to remove reliability and maintainability related deficiencies caused by inadequate specifications.

NEW DOCUMENT REQUIREMENTS

Seventeen generic classes of hydraulic system components are not covered by governing military specifications. These were identified through investigations, documentation research analyses and development of a Baseline Hydraulic System Documentation (specification) Tree. Table VI displays specific recommendations for new documents by providing the following information:

- Generic classes
- Abbreviated statement of usage
- Scope of required document

NO ACTION REQUIRED

Three documents analyzed during this study were found to be adequate with respect to reliability and maintainability. Consequently, it is

recommended that these documents be used as is. These documents are:

MIL-HDBK-692 (MR)	A Guide to the Selection of Rubber O-Rings, dated 20 October 1964
MIL-T-9906A	Tape, Aircraft Tubing Identification Marker, Noncorrosive, Heat and Solvent Resistant, dated 2 March 1970
MIL-STD-1247B	Identification of Pipe, Hose and Tube Lines for Aircraft, Missile, and Space Systems, dated 20 December 1968

TABLE VI. HELICOPTER HYDRAULIC SYSTEM CLASSIFICATIONS DEVOID OF GOVERNING DOCUMENTATION (MILITARY SPECIFICATIONS)

Generic Classification	Application	Scope for Recommended Documents
Auxiliary Hydraulic Actuators	This classification of actuators is of the electrohydraulic type. They are usually used in conjunction with the flight controls for stabilization of the helicopter.	This document should govern the general design requirements for servocontrolled hydraulic actuators and their electrical and servo valve functional elements.
Control Boost Actuators	This classification of actuators is of the electrohydraulic type. They are usually used in conjunction with the flight controls to transfer small pilot-induced electrical signals into increased hydromechanical energy to control the helicopter control surfaces.	This document should govern the general design requirements for servocontrolled hydraulic actuators and their electrical and servo valve functional elements.
Servocontrolled Hydraulic Actuators	This classification of actuators is of the mechanical input servocontrolled type. They are usually used to actuate the flight control and stabilization surfaces of the helicopter.	This document should govern the general design requirements for hydraulic servocontrolled actuating devices and the servo valve functional element. Provisions should also be made for the incorporation of such components as irreversible valves when required by the overall system design.

TABLE VI - Continued

Generic Classification	Application	Scope for Recomr nded Documents
Accessory Hydraulic Actuating Cylinders	This classification of actuators is used to actuate accessory devices such as brakes, ramps, cable cutters, etc. These actuators are either fully extended or extracted.	This document should govern the general design requirements for hydraulic actuators including the control valve. The control valve may be electrically or mechanically actuated.
Hydraulic Rotor Brake System	This system is used to apply the rotor brake using electrically actuated hydraulic brakes. The system is made up of electrical or mechanical linkage controls, selector valve, hydraulic actuator and a brake device.	This document should govern the general design requirements for remotely controlled hydraulic rotor brake systems. It should include applicable references to military specifications for electrical or mechanical controls, selector valves, hydraulic accessory actuators, and braking devices.
Hydraulic Motors	This classification is applicable to motors using hydraulic energy as a power source. These motors are used to drive various accessory units including cargo ramps, hoist, starters, etc.	This document should govern the general design requirements for hydraulic motors. It should include applicable reference to specific purpose hydraulic motor military specifications such as MIL-S-2999 and MIL-M-7997.

TABLE VI - Continued

Generic Classification	Application	Scope for Recommended Documents
Hydraulic Controls	This classification governs the use of hydraulically operated controls such as valves, regulators, and fuses. Each of these components is used to provide a specific control function within the hydraulic system.	This document should govern the general design requirements for hydraulically operated control devices. It should contain adequate references to the applicable military specification for each hydraulic control device.
Hydraulic Manifold Assembly	This classification is composed of several discrete functional elements to perform the composite function of controlling the hydraulic system pressure.	This document should govern the general design requirements for hydraulic manifold assemblies incorporating two or more discrete functions into one assembly. It should include the various functional elements and their interface relationships necessary to perform the component function.
Manual Control Valves	This classification of valves is applicable to those functions requiring a manually operated selector control valve.	This document should govern the general design requirements for manually operated selector control valves.
Sequence Valves	This classification of valves is applicable to those functions requiring a sequential occurrence of events, i.e., cargo door opens prior to cargo ramp being lowered.	This document should govern the general design requirements for sequential type valves.

TABLE VI - Continued

Generic Classification	Application	Scope for Recommended Documents
Irreversible Valves	This classification of valves is used with servocontrolled hydraulic actuators. It incorporates a servo valve, pressure relief valve, and emergency accumulators to transfer pilot-induced forces into hydraulic pressure forces to actuate the actuator. It also serves to lock out rotor-induced feedback forces and provide an emergency source of hydraulic pressure to safely control the helicopter to a safe landing.	The irreversible valve is considered to be composite-type equipment; therefore the document should incorporate the provisions of the various functional element documents such as emergency accumulator, pressure relief valve, etc., in the general design requirements. Also to be included are the mechanical input linkage and actuator interface requirements.
Linear Valves	This classification of valves is used with servocontrolled hydraulic actuators and as a functional element in the irreversible valve. It serves to port hydraulic pressure to the actuator cylinder and/or piston rod to move a control surface such as the rotor blades.	The document should govern the general design requirements for linear valves, including interface requirements with the actuator and mechanical input linkage. Note: This valve was governed by MIL-V-7915 until the document was deleted in November 1972.

TABLE VI - Continued

Generic Classification	Application	Scope for Recommended Documents
Priority Valves	This classification of valves is applicable to those functions that require the operation of certain functions should a partial loss of hydraulic power occur.	This document should govern the general design requirements for priority valves including system pressure and capacity measuring devices.
Solenoid Valves	This classification of valves is applicable to those designs that require the use of control valves remotely (de)energized by electrical energy.	This document should govern the general design requirements for control valves included in the electrical solenoid used to energize the valve.
Pressure Generation System	This system is used to generate, store, and regulate hydraulic pressure. The system is made up of hydraulic pumps, reservoirs, accumulators, filters, check and relief valves, and heat exchangers.	This document should govern the general design requirements for the generation, storage, and regulation of hydraulic pressure. It should include reference to applicable military specifications for the various classes of components used within the pressure generation system.
Hydraulic Pumps	This classification is applicable to pumps used to generate hydraulic energy. The pumps may be hand or power driven.	This document should govern the general design requirements for hydraulic pumps including the applicable interface requirements with the various power sources.

TABLE VI - Continued

Generic Classification	Application	Scope for Recommended Documents
Hydraulic Pressure Reducers	This classification is applicable to systems that require the reduction of hydraulic pressure for the proper operation of some components.	This document should govern the general design requirements for hydraulic pressure-reducing.

GLOSSARY

Availability	A measure of the degree to which an item is in the operable and committable state at the start of the mission, when the mission is called for at an unknown (random) point in time.
Demonstrated	That which has been proven by the use of concrete evidence gathered under specified conditions.
Failure	The inability of an item to perform within previously specified limits.
Failure Rate	The number of failures of an item per unit measure of life (cycles, time, miles, events, etc., as applicable for the item).
Human Engineering	The area of human factors which applies scientific knowledge to the design of items to achieve effective man-machine integration and utilization.
Human Factors	A body of scientific facts about human characteristics. The term covers all biomedical and psychosocial considerations; it includes, but is not limited to, principles and applications in the areas of human engineering, personnel selection, training, life support, job performance aids, and human performance evaluation.
Inherent	Achievable under ideal conditions, generally derived by analysis, and potentially present in the design.
Maintainability	A characteristic of design and installation which is expressed as the probability that an item will be retained in or restored to a specified condition within a given period of time, when the maintenance is performed in accordance with prescribed procedures and resources.

Maintenance	All actions necessary for retaining an item in or restoring it to, a specified condition.
Maintenance Man-Hours per Flight Hour	The number of maintenance hours expended per flight hour to keep the helicopter flying.
Mean-Time-Between-Failures (MTBF)	For a particular interval, the total functioning life of a population of an item divided by the total number of failures within the population during the measurement interval. The definition holds for time, cycles, miles, events, or other measures of life units.
Mean-Time-To-Repair (MTTR)	The total corrective maintenance time divided by the total number of corrective maintenance actions during a given period of time.
Quality Assurance	Quality control inspections subsequent to maintenance or manufacture at vendors' or manufacturers' facilities.
Reliability	The probability that an item will perform its intended function for a specified interval under stated conditions.
Safety	The conservation of human life and its effectiveness, and the prevention of damage to items, consistent with mission requirements.

APPENDIX I
DOCUMENTS ANALYZED

SPECIFICATIONS

Military

MIL-P-116E	Preservation, Methods of, 18 August 1967
MIL-C-172C	Cases, Bases, Mounting, and Mounts, Vibration (for use with Electronics Equipment in Aircraft), 20 October 1966
MIL-H-775	Hose, Rubber, Plastic, Fabric, or Metal (Including Tubing); and Fittings, Nozzles and Strainers, Packaging of, 18 October 1968
MIL-D-1000	Drawings, Engineering and Associated Lists, 1 March 1965
MIL-B-1083C	Ball, Bearing, Ferrous and Non-Ferrous (for use in Bearings and Valves), 3 March 1964
MIL-G-3036A	Grommet, Elastic, Hot Oil and Coolant Resistant, 13 May 1965
MIL-F-3541B	Fittings, Lubrication, 16 July 1965
MIL-P-4861	Packings, Preformed, Rubber, Packing, Packaging of, 2 June 1970
MIL-W-5013H	Wheel and Brake Assemblies: Aircraft, 5 April 1971; Amendment 1, 14 September 1971
MIL-C-5015	Connectors, Electrical, "AN" Type, 9 June 1970
MIL-S-5049B	Scrapers, Piston Rod, 3 July 1963; Amendment 2, 21 December 1966
MIL-A-5070D	Adapter, Hose to Tube, Pipe and Flange, Reusable: Hydraulic, Fuel and Oil Lines, 11 September 1970; Supplement 1, 11 September 1970

MIL-B-5087B(ASG)	Bonding, Electrical and Lightning Protected, for Aerospace Systems, 15 October 1964; Amendment 2, 31 August 1970
MIL-W-5088	Wiring, Aircraft, Selection and Installation of, 28 March 1972
MIL-E-5272C	Environmental Testing, Aeronautical and Associated Equipment, General Specification for, 13 April 1959; Amendment 2, 18 September 1970; Notice 1, 22 January 1971
MIL-P-5315B	Packing, Preformed, Hydrocarbon Fuel Resistant, 2 December 1964; Amendment 1, 18 November 1966
MIL-T-5350D	Transmitter, Synchro Operated, Aircraft, General Specifications for, 8 March 1966; Amendment 1, 18 June 1970
MIL-H-5440F	Hydraulic Systems; Design, Installation and Tests of Aircraft (General Specification for), 18 January 1972
MIL-A-5498C(ASG)	Accumulators, Aircraft Hydropneumatic Pressure, 25 February 1957
MIL-C-5501E	Caps and Plugs, Protective, Dust and Moisture Seal, 4 August 1969
MIL-C-5503C	Cylinders, Aeronautical, Hydraulic Actuating, General Requirements for, 27 June 1963; Amendment 4, 26 April 1972
MIL-F-5504B	Filters and Filter Elements, Fluid Pressure, Hydraulic Micronic Type, 17 October 1958; Amendment 2, 3 April 1969
MIL-F-5508B	Fuses, Aircraft Automatic Quantity Measuring, Hydraulic, 14 July 1964; Amendment 1, 14 August 1964
MIL-F-5509B	Fittings, Flared Tube, Fluid Connection, 22 January 1963; Supplement 1, 22 January 1963
MIL-P-5510B	Packing, Preformed, Straight Thread Tube Fitting, Boss, 10 October 1962; Amendment 2, 18 June 1971

MIL-J-5513B	Joints, Hydraulic Swivel, 13 May 1971
MIL-G-5514F	Gland Design; Packings, Hydraulic, General Requirements for, 15 January 1969
MIL-P-5515C	Pump, Hydraulic, RAM, Hand Driven, 17 May 1972
MIL-P-5516C	Packing, Preformed, Petroleum, Hydraulic Fluid Resistant, 160°F, 5 January 1967; Amendment 2, 29 March 1971
MIL-P-5517	Plastic Parts in Aircraft Hydraulic Equipment; General Tests for, 14 September 1966
MIL-P-5518C	Pneumatic Systems, Aircraft, Design, Installation and Data Requirements for, 9 July 1962; Supplement 1, 9 July 1962, Interim Amendment 1(USAF), 3 December 1968
MIL-V-5519C	Valves, Aircraft Hydraulic Unloading, 8 June 1964; Amendment 1, 5 August 1954
MIL-R-5520C	Reservoirs, Aircraft Hydraulic, Non-Separated Type, 30 June 1964; Amendment 1, 21 March 1969
MIL-T-5522C	Test Procedure for Aircraft Hydraulic and Pneumatic Systems, General, 25 March 1966
MIL-V-5523C(USAF)	Valve; Relief, Hydraulic Pressure, 3 February 1969; Amendment 1, 2 June 1971
MIL-V-5524B(ASG)	Valve; Check, Hydraulic, Aircraft, Type I Systems (ASG), 4 June 1975; Amendment 2, 21 September 1959
MIL-V-5525C	Valves, Aircraft, Power Brake, 21 October 1959
MIL-V-5527A	Valves, Aircraft, Hydraulic, Thermal Expansion Relief, 14 May 1951
MIL-V-5528A	Valves, Hydraulic, Controllable Check, 26 September 1951

MIL-V-5529A	Valves, Hydraulic Directional Control, 14 May 1951; Amendment 2, 28 June 1956
MIL-V-5530B	Valves; Aircraft Hydraulic Shuttle, 3 June 1964; Amendment 4, 24 March 1970
MIL-H-5540B	Adhesive Polychloroprene, 23 March 1967; Interim Amendment -1 (AS), 4 June 1970
MIL-C-5541B	Chemical Films for Aluminum and Aluminum Alloys, 30 June 1970; Amendment 1, 30 September 1971
MIL-H-5606C	Hydraulic Fluid, Petroleum Base, Aircraft, Missile and Ordnance, 30 September 1971
MIL-C-5637B	Cooler, Lubricating Oil, Petroleum Base, Aircraft Engine, Tubular, 15 September 1964
MIL-P-5673	Pin, Straight, Headed, 27 September 1962
MIL-R-5674	Rivet, Aluminum and Aluminum Alloy, 25 June 1966
MIL-B-5687C	Bearings, Sleeve; Washers, Thrust, Sintered, Metal Powder, Oil-Impregnated, 12 June 1962
MIL-P-5994C	Pump, Hydraulic, Electric-Motor-Driven, Variable Delivery, General Specification for, 3 May 1972
MIL-C-6026B	Control Unit, Pressure Generating, Manually Operated, Aircraft Hydraulic Brake System, 9 October 1959
MIL-B-6039C	Bearings, Double Row, Ball, Sealed Rod End, Anti-friction, Self-Aligning, 7 July 1971
MIL-O-6083C	Oil; Preservative, Hydraulic Equipment, 17 November 1965; Amendment 2, 6 June 1969
MIL-V-6164C	Valves; Aircraft, Air, High-Pressure, 2 June 1970

MIL-I-6181D	Interference Control Requirements, Aircraft Equipment, 25 November 1959; Notice 6, 24 July 1969
MIL-T-6732	Tubing; Chrome-Nickel-Molybdenum (8630) Steel, Seamless, 9 June 1950; Amendment 1, 31 May 1951
MIL-B-6812B	Bolt, Aircraft, 23 August 1967
MIL-T-6845C	Tubing; Steel, Corrosion-Resistant (304), Aerospace Vehicle Hydraulic System, 1/8 Hard Condition, 21 September 1966; Amendment 2, 16 October 1970
MIL-I-6866B(ASG)	Inspection, Penetrant Method of, 26 February 1964; Amendment 2, 30 January 1969
MIL-I-6868D	Inspection Process, Magnetic Particle, 30 December 1971
MIL-I-6870	Inspection Requirements, Nondestructive, for Aircraft Materials and Parts, 25 February 1965
MIL-I-7057	Indicator, Synchro, Aircraft, General Specification for, 11 May 1970
MIL-E-7080B	Electronic Equipment, Aircraft Selection and Installation of, 6 June 1962, Amendment 3, 29 April 1968
MIL-T-7081D	Tube, Aluminum Alloy, Seamless, Round, 6061, Aircraft Hydraulic Quality, 2 November 1965; Amendment 4, 23 June 1971
MIL-F-7179D	Finishes and Coatings: General Specification for Protection of Aerospace Weapons Systems, Structures and Parts, 3 March 1969
MIL-R-7362D	Rubber, Synthetic, Solid, Sheet, Strip and Fabricated Parts, Synthetic Oil Resistant, 2 May 1967; Amendment 1, 8 July 1971
MIL-F-7370	Bulb, Temperature, Thermoresistor, -70 Deg. to Plus 150 Deg. C, Type G-1, 10 September 1969
MIL-S-7742	Screw Threads, Standard, Aeronautical, 2 February 1968

MIL-S-7839	Screw, Structural, Aircraft, 22 June 1965
MIL-P-7858	Pump, Hydraulic, Power-Driven Fixed Displacement, 4 April 1952; Amendment 2, 17 April 1956
MIL-S-7867A	Servo Actuator, D-9, 1 October 1957
MIL-V-7915	Valves, Hydraulic, Directional Control, Slide Selector, 15 April 1952; Amendment 2, 6 July 1956
MIL-B-7949D	Bearings, Ball, Airframe, Antifriction, 8 December 1971; Supplement 1A, 8 December 1971
MIL-T-7990B	Transmitter, Temperature, Electrical Resistance, 70° to 300°C, 26 April 1966
MIL-M-7997A	Motors, Aircraft Hydraulic, Constant Displacement, 27 April 1956; Amendment 1, February 1961
MIL-A-8064	Actuators and Actuating Systems, Aircraft, Electro-Mechanical, General Requirements for, 22 January 1970
MIL-G-8348F	Gage Assemblies, Air Pressure Dial Indicating, Chuck Type, Self-Contained, 30 March 1972
MIL-H-8446B	Hydraulic Fluid, Nonpetroleum Base, Aircraft, 12 March 1959, Amendment 1, 16 July 1959
MIL-I-8500B	Interchangeability and Replaceability, Physical, of Component Parts for Aircraft (Including Guided Missiles), 10 October 1960
MIL-H-8501B	Helicopter Flying and Ground Handling Qualities, General Requirements for, 7 September 1961; Amendment 1, 3 April 1962
MIL-T-8504A	Tubing, Steel, Corrosion-Resistant (304) Aerospace Vehicle Hydraulic Systems, Annealed, Seamless and Welded, 22 September 1966; Amendment 2, 14 April 1971

MIL-P-8564D	Pneumatic System Components, Aeronautical, General Specification for, 18 November 1970
MIL-V-8566A	Valves, Aircraft Hydraulic Flow Regulator, 24 June 1964
MIL-R-8572A(AER)	Reducers, Pneumatic Pressure Aircraft, 5 October 1954
MIL-R-8573A(ASG)	Reservoirs, Air, Nonshatterable Steel, 31 July 1957; Amendment 4, 14 March 1968
MIL-B-8584C	Brake Systems, Wheel, Aircraft, Design of, 12 August 1970
MIL-M-8609	Motors, Direct-Current, 28-VOLT System, Aircraft, General Specification for, 26 July 1965
MIL-A-8625C	Anodic Coating, for Aluminum and Aluminum Alloys, 15 January 1968
MIL-A-8679	Test Requirements - Ground Helicopters, 5 March 1954
MIL-S-8698(ASG)	Structural Design Requirements, Helicopters, 1 July 1954; Amendment 1, 28 February 1958
MIL-O-8706B(AS)	Data and Tests, Engineering: Contract Requirements for Aircraft Weapons Systems, 15 August 1968
MIL-H-8775C	Hydraulic System Components, Aircraft and Missiles, General Specification for, 8 January 1964
MIL-F-8785	Flying Qualities of Piloted Airplanes, 7 August 1969
MIL-H-8788B	Hose, Hydraulic and Pneumatic, High Pressure, 12 July 1968
MIL-F-8789	Fitting End, Attachable Hydraulic and Pneumatic, High-Pressure Hose, 17 October 1968
MIL-H-8790C	Hose Assemblies, Rubber, Hydraulic, High Pressure (3,000 PSI), 24 May 1966; Amendment 1, 24 June 1968

MIL-R-8791C	Retainer, Packing, Hydraulic, and Pneumatic, Tetrafluoroethylene Resin, 29 June 1964; Amendment 1, 31 March 1971
MIL-H-8794D	Hose, Rubber, Hydraulic, Fuel and Oil Resistant, 4 February 1971
MIL-H-8795B	Hose Assemblies, Rubber, Hydraulic, Pneumatic, Fuel and Oil Resistant, 21 March 1966; Amendment 1, 24 June 1968
MIL-T-8808A	Tubing, Steel, Corrosion-Resistant (18-8 Stabilized) Aircraft Hydraulic Quality, 1 April 1958; Amendment 1, 28 July 1969
MIL-V-8813(ASG)	Valves, Aircraft, Hydraulic Pressure Relief, Type II Systems (ASG), 20 November 1957
MIL-F-8815C	Filter and Filter Elements, Fluid Pressure, Hydraulic Line, 15 Micron Absolute and 5 Micron Absolute Type II Systems, General Specification for, 29 September 1972; Supplement, 29 September 1972
MIL-C-8838(ASG)	Cylinder, Pneumatic Actuating, Aircraft Utility System, General Specification for, 3 June 1958
MIL-I-8846A	Insert, Screw Thread, Helical Coil, 6 November 1969
MIL-A-00860A(USAF)	Airplane Strength and Rigidity, General Specification for, 31 March 1971
MIL-A-008861(USAF)	Airplane Strength and Rigidity, Flight Loads, 31 March 1971
MIL-A-008865(USAF)	Airplane Strength and Rigidity, Miscellaneous Loads, 31 March 1971
MIL-A-8866(ASG)	Airplane Strength and Rigidity Reliability Requirements, Repeated Loads, and Fatigue, 18 May 1960
MIL-A-8870(ASG)	Airplane Strength and Rigidity Vibration, Flutter, and Divergence, 18 May 1960
MIL-H-8890(ASG)	Hydraulic Components, Type III, (-65 Deg. to Plus 450 Deg. F), General Specification for (ASG), 1 November 1961

MIL-H-8891(ASG)	Hydraulic Systems, Manned Flight Vehicles, Type III, Design, Installation, and Data Requirements for (ASG), 1 November 1961
MIL-A-8897A	Accumulators, Hydraulic, Cylindrical, 3,000 PSI, Aircraft Type II Systems, 18 May 1963
MIL-R-8931	Reservoirs: Aircraft and Missile, Hydraulic, Separated Type, 30 June 1964; Amendment 1, 10 May 1972
MIL-S-8932	Switches, Pressure, Aircraft, General Specification for, 28 January 1965
MIL-B-8942A(ASG)	Bearings, Plain, TFE Lined, Self-Aligning, 15 November 1965; Amendment 1, 14 August 1967
MIL-C-8956A	Clamps, Loop, Tube Support, 2 December 1970
MIL-F-9490C	Flight Control Systems - Design, Installation and Test of, Piloted Aircraft, General Specifications for, 9 March 1966
MIL-Q-9858A	Quality Program Requirements, 16 December 1963
MIL-T-9906A	Tape, Aircraft Tubing Identification Marker (Non-corrosive, Heat, Cold and Solvent Resistant), 8 April 1964; Amendment 1, 2 March 1970
MIL-L-9909(USAF)	Light, Ultraviolet, Metals Examining, 26 April 1961
MIL-C-11796	Corrosion Preventive, Petrolatum, Hot Application, 17 November 1961
MIL-S-13572B	Spring, Helical, Compression and Extension, 7 November 1967
MIL-C-14055C	Cap, Hydraulic Brake Actuating Cylinder; Synthetic Rubber (General Specification for), 10 July 1967
MIL-C-14058	Controller, Hydraulic, Assembly, 5 May 1955

MIL-F-18240D	Fastener, Externally Threaded 250 Deg. F, Self-Locking Element for (ASG), 5 April 1968
MIL-C-18244	Control and Stabilization Systems; Automatic, Piloted Aircraft, General Specification for, 1 December 1962
MIL-F-18280C	Fitting, Flareless Tube, Fluid Connection, 27 June 1969; Supplement A, 27 June 1969; Amendment 1, 23 April 1971
MIL-F-18372(AER)	Flight Control Systems; Design, Installation, and Test of, Aircraft (General Specification for), 31 March 1955
MIL-V-19067A	Valves, Check, Controllable, Hydraulic, Aircraft, Type II Systems, 30 April 1957
MIL-V-19068A	Valves, Shuttle, Hydraulic, Aircraft, Type II Systems, 30 April 1957
MIL-V-19069A(ASG)	Valve, Check, Hydraulic, Aircraft, Type II Systems, 30 April 1957; Amendment 1, 21 September 1959
MIL-P-19692B	Pumps, Hydraulic, Variable Delivery, General Specification for, 3 July 1963
MIL-P-21143	Pins, Straight, Headless (Dowel) (Over Nominal Size), 3 August 1966
MIL-R-21248B	Rings, Retaining (Tapered and Reduced Section Type), 1 August 1969
MIL-S-22999A(WEP)	Starter; Aircraft Engine, Hydraulic, 3 February 1964; Amendment 1, 3 June 1965
MIL-C-23217B	Coating, Aluminum, Vacuum Deposited, 25 August 1969
MIL-D-23222A(AS)	Demonstration Requirements for Helicopters, 18 March 1971
MIL-G-23337(WEP)	Gages, Pressure, Dial Indicating, 15 July 1962; Amendment 3, 15 May 1965
MIL-N-25027D	Nut, Self-Locking, 250 Deg. F, 450 Deg. F, and 800 Deg. F, 125 Ksi Ftu, 60 Ksi Ftu, and 30 Ksi Ftu (ASG), 24 July 1969

MIL-T-25363C(USAF)	Tank, Pneumatic Pressure, Aircraft, Glass Fiber, 2 June 1969
MIL-C-25427A	Coupling Assembly, Hydraulic, Self-Sealing, Quick Disconnect, 8 January 1963
MIL-H-25475B	Hydraulic System, Missile, Design, Installation and Tests, and Data Requirements, General Requirements for, 29 April 1971
MIL-C-25478(USAF)	Coolers, Lubricating Oil, Aircraft Engine, Synthetic Oil, General Specification for, 5 October 1956; Amendment 1, 14 February 1957
MIL-V-25517A	Valve, Aircraft Hydraulic Restrictor, 24 July 1959
MIL-H-25579C	Hose Assembly, Tetrafluoroethylene, High Temperature, Power Plan, Aircraft, 20 February 1967; Amendment 1, 16 August 1971
MIL-V-25675B	Valve, Check, Miniature, Hydraulic, Aircraft and Missile, 13 May 1968; Amendment 4, 2 May 1972
MIL-P-25732B	Packing, Preformed, Petroleum Hydraulic Fluid Resistant, 275 Deg. F, 11 January 1966
MIL-C-26074B	Coating, Nickel-Phosphorus, Electroless Nickel, Requirements for, 26 March 1969; Amendment 1, 14 May 1971
MIL-C-26482	Connector, Receptacle, Electrical, Wall Mountings, Bayonet Coupling, Crimp Type, Corrosion Proof, Class E, 29 May 1969
MIL-V-27162	Valves, Servo Control, Electro-Hydraulic, General Specification for, 6 October 1959
MIL-H-27267A	Hose Tetrafluoroethylene, High Temperature, Medium Pressure, 13 July 1965; Amendment 3, 11 June 1971
MIL-F-27272A	Fittings, Tetrafluoroethylene Hose, High Temperature, Medium Pressure, General Requirements for, 2 May 1966; Amendment 1, 6 March 1969; Supplement 1A, 30 June 1972

MIL-F-27656B	Filter, Fluid, Pressure MXU-4081M, Absolute 5-Micron, Hydraulic, 29 November 1968; Amendment 1, 6 May 1969
MIL-H-38360A	Hose Assembly, Tetrafluoroethylene, High Temperature, High Pressure, Hydraulic and Pneumatic, 7 December 1966; Amendment 1, 21 November 1967
MIL-I-45208A	Inspection System Requirements, 16 December 1963
MIL-I-45914	Insert, Screw Thread-Locked In, Key Locked, 1 December 1967; Amendment 1, 25 November 1970
MIL-V-46720(ORD)	Valve, Solenoid, Hydraulic, 31 May 1972; Amendment 1, 8 July 1963
MIL-C-52078	Cap-Plug, Cap, and Plug, Protective, Plastic, Dust and Moisture Seal, 30 June 1959
MIL-T-50301(MU)	Quality Control System, Requirements for, 6 May 1969
MIL-A-52689	Accumulators; Hydraulic, 18 June 1970
MIL-C-81740(AS)	Coatings, Aluminum and Aluminum Alloys (Matallic Compound Decomposition), 15 August 1969
MIL-H-83282(USAF)	Hydraulic Fluid, Fire Resistant Synthetic Hydrocarbon Base, Aircraft, 16 July 1970; Amendment 1, 16 July 1959

Federal

FF-B-185	Bearings, Roller, Cylindrical, and Bearings, Roller, Self-Aligning, September 10, 1956
FF-N-836D	Nut: Square, Hexagon, Cap, Slotted, Castellated, Clinch, Knurled and Welding and Single Ball Seat, April 24, 1972

FF-P-386D	Pins, Cotter (Split), March 10, 1971; Amendment 1, 12 December 1968
FF-S-86D	Screw, Cap, Sockethead, June 15, 1971
FF-S-92A	Screw, Machine: Slotted or Cross-Recessed, or Hexagan Head, January 26, 1965; Amendment 3, May 13, 1971
FF-S-107C	Screw, Tapping and Drive, 27 May 1969
FF-S-200A	Setscrews: Hexagon Socket and Spline Socket, Headless, 24 October 1969
FF-S-210A	Setscrews: Square Head and Slotted Headless, October 24, 1969
QQ-C-320A	Chromium Plating (Electrodeposited), 25 July 1967
QQ-N-290A	Nickel Plating (Electrodeposited), November 12, 1971
QQ-P-416C	Plating, Cadmium (Electrodeposited), January 29, 1971; Amendment 1, September 21, 1972
QQ-S-365A	Silver Plating, Electrodeposited, General Requirements for, April 6, 1959; Amendment 2, 24 February 1967
QQ-Z-325B	Zinc Coating, Electrodeposited, Requirements for, June 26 1969; Amendment 2, 2 March 1970
VV-P-236	Petrolatum, Technical, 17 December 1954
WW-T-700E/GEN	Tube, Aluminum Alloy, Drawn, Seamless, General Specifications for, July 24, 1972
WW-T-700/4E	Tube, Aluminum Alloy; Drawn, Seamless, 5052, July 7, 1972
WW-T-700/6E	Tube, Aluminum Alloy, Round, Square, Rectangular and Other Shapes, Drawn, Seamless, 6061 and 6062, July 7, 1972

STANDARDS

Military

MIL-STD-9A	Screw Thread Convections and Methods of Specifying, 26 May 1960
MIL-STD-17B-2	Mechanical Symbols for Aeronautical, Aero-spacecraft and Spacecraft USC, 23 January 1973; Notice 1, 23 February 1965
MIL-STD-100A	Engineering Drawing Practices, 1 October 1967
MIL-STD-105D	Sampling Procedures and Tables for Inspection by Attributes, 29 April 1963; Notices 1 (Navy), 1 November 1963; Change Notice 2, 20 March 1964
MIL-STD-109B	Quality Assurance Terms and Definitions, 4 April 1969
MIL-STD-143B	Specifications and Standards, Order of Precedence for the Selection of, 12 November 1969
MIL-STD-210A	Cliamatic Extremes for Military Equipment, 2 August 1957; Change Notice 1, 30 November 1958
MIL-STD-217A	Reliability Stress and Failure Rate Data for Electronic Equipment, 1 December 1965
MIL-STD-250C	Aircrew Station Controls and Displays for Rotary Wing Aircraft, 8 July 1968
MIL-STD-280A	Definitions of Item Levels, Item Exchangeability, Models, and Related Terms, 7 July 1969
MIL-STD-453	Inspection, Radiographic, 29 October 1962; Change Notice 1, 4 September 1963
MIL-STD-461A	Electromagnetic Interference Characteristics Requirements for Equipment, 1 August 1968; Notice 1, 7 February 1969; Notice 2, 20 March 1969; Notice 3, 1 May 1970; Notice 4 (EL), 9 February 1971

MIL-STD-462	Electromagnetic Interference Characteristic Measurement of, 31 July 1967; Notice 1, 1 August 1968; Notice 2, 1 May 1970; Notice 3 (EL), 9 February 1971
MIL-STD-470	Maintainability Program Requirements (for Systems and Equipments),21 March 1966
MIL-STD-471	Maintainability Demonstration, 15 February 1966
MIL-STD-480	Configuration Control-Engineering Changes, Deviations and Waviers; 30 October 1968
MIL-STD-490	Military Standard Specification Practices, 30 October 1968
MIL-STD-499(USAF)	System Engineering Management, 17 July 1969
MIL-STD-721B	Definitions of Effectiveness Terms for Reliability, Maintainability, Human Factors, and Safety, 25 August 1966
MIL-STD-781	Reliability Tests: Exponential Distribution, 15 November 1967
MIL-STD-785	Reliability Program for System and Equipment Development and Production, 28 March 1969
MIL-STD-794	Parts and Equipment, Procedures for Packaging and Packing of, 11 March 1969
MIL-STD-810B	Environmental Test Methods, 15 June 1967; Notice 1, 20 October 1969; Notice 2 (USAF), 29 September 1969; Notice 3, 18 September 1970; Notice 4, 21 September 1970
MIL-STD-831	Test Reports, Preparation of, 28 August 1963
MIL-STD-845A	Fitting, Hose, Tetrafluoroethylene, High Temperature, Medium Pressure, Classification of Defects, 30 June 1972
MIL-STD-882	System Safety Program for Systems and Associated Subsystems and Equipment Requirements for, 15 July 1969
MIL-STD-889A	Dissimilar Metals, 5 May 1972

MIL-STD-473	Maintainability Verification/Demonstration/ Evaluation for Aeronautical Use, 3 May 1971
MIL-STD-1247B	Military Standard Markings, Functions and Hazard Designations of Hose, Pipe and Tube Lines for Aircraft, Missile, and Space Systems, 20 December 1968
MIL-STD-1472	Human Engineering Design Criteria for Military Systems, Equipment and Facilities, 15 May 1970

Military Handbooks

MIL-HDBK-692(MR)	Military Standardization Handbook - A Guide to the Selection of Rubber O-Rings, 20 October 1964

ARMY TECHNICAL MANUALS

TM 55-1520-209-20	Organizational Maintenance Manual, Army Model CH-47A Helicopter, May 1968
TM 55-1520-209-20P	Organizational Maintenance Repair Parts and Special Tools List, Helicopter, Cargo Transport, CH-47A, CH-47B, CH-47C (Vertol), August 1971
TM 55-1520-209-34P	DS and GS Maintenance Repair Parts and Special Tools List, Helicopter, Cargo Transport, CH-47A, CH-47B, CH-47C (Vertol), August 1971
TM 55-1520-209-35	DS, GS and Depot Maintenance Manual, Army Model CH-47A Helicopter, May 1968
TM 55-1520-210-20	Organizational Maintenance Manual: Army Model UH-1D/H Helicopter, 7 May 1969
TM 55-1520-210-20P	Organizational Maintenance Repair Parts and Special Tools List, Helicopter, Utility-Tactical Transport, UH-1A, UH-1B, UH-1C, UH-1D, UH-1h (Bell), April 1971
TM 55-1520-210-34	DS and GS Maintenance Manual, Army Model UH-1D/H Helicopter, 10 September 1971

TM 55-1520-210-34P	DS and GS Maintenance and Repair Parts and Special Tools List, UH-1H, UH-1M (Bell), December 1971
TM 55-1520-214-20	Organizational Maintenance Manual, Helicopter, Observation, OH-6A (Hughes), July 1969
TM 55-1520-214-20P	Organizational Maintenance Repair Parts and Special Tools List: Helicopter, Observation, OH-6A (Hughes), May 1971
TM 55-1520-217-20	Organizational Maintenance Manual, CH-54A Helicopter, April 1969
TM 55-1520-217-20P	Organizational Maintenance Repair Parts and Special Tools List, Helicopter, Cargo Transport, CH-54A, CH-54B (Sikorsky), May 1971
TM 55-1520-217-35	DS, GS and Depot Maintenance Manual, CH-54A Helicopter, April 1969
TM 55-1520-217-35P	DS, GS and Depot Maintenance Repair Parts and Special Tools List: Helicopter, Cargo Transport, CH-54A (Sikorsky), 19 December 1971
TM 55-1520-221-20	Organizational Maintenance Manual: Army Model AH-1G Helicopter, 10 September 1971
TM 55-1520-221-20P	Organizational Maintenance Repair Parts and Special Tools List, Helicopter, Attack-AH-1G (Bell); Helicopter Flight Trainer-TH-1G (Bell), June 1971
TM 55-1520-221-34	DS and GS Maintenance Manual, Army Model AH-1G Helicopter, 27 August 1971
TM 55-1520-221-34P	DS, GS and Depot Maintenance Repair and Special Tools List, Helicopter, Attack - AH-1G (Bell), June 1971

APPENDIX II
RELATED INAPPLICABLE DOCUMENTS

The following military specifications were collected for review. Examination revealed that they did not have application to the helicopter hydraulic system investigation.

DOCUMENT NUMBER	TITLE	APPLICATION
MIL-C-172C	Cases; Bases, Mounting; and Mounts, Vibration (For Use with Electronic Equipment in Aircraft)	Use in Helicopters not permitted
MIL-F-3541B	Fittings, Lubrication	Nonhydraulic related
MIL-C-5015D	Connectors, Electric, "AN" Type	Inactive for USAF procurement
MIL-E-5272C	Environmental Testing, Aeronautical and Associated Equipment, General Specification for	Inactive for Air Force new design
MIL-T-6732	Tubing; Chrome-Nickel-Molybdenum Steel Seamless	Structural tubing only
MIL-I-7057	Indicator, Synchro, Aircraft, General Specification for	Nonhydraulic related
MIL-F-7370	Bulb, Temperature Thermoresistor, -70 Deg. to Plus 150 Deg. C, Type G-1	Nonhydraulic related
MIL-S-7867A	Servo Actuators, D-9	Target drone use
MIL-A-8064	Actuators and Actuating Systems, Aircraft, Electro-Mechanical, General Requirements	Nonhydraulic related
MIL-G-8348F	Gage Assemblies, Air Pressure Dial Indicating, Check Types, Self-Contained	Nonhydraulic related

MIL-M-8609	Motors, Direct-Current, 28-VOLT System, Aircraft, General Specification for	Not the type to drive hydraulic pumps
MIL-F-87850	Flying Qualities of Piloted Airplanes	Fixed wing applications
MIL-C-14058	Controller, Hydraulic, Assembly	Special purpose; nonaviation
MIL-C-26482	Connector, Receptacle, Electrical, Wall Mountings, Bayonet Coupling, Crimp Type, Corrosion Proof, Class E	Nonhydraulic related

APPENDIX III
RELATED REFERENCE DOCUMENTS

The following documents were collected for review, and were classified as being valuable reference documents. They are applicable to hardware processes, marking, packaging, and inspection procedures.

DOCUMENT NUMBER	TITLE	PURPOSE
MIL-P-116E	Preservation, Method of	Corrosion control
MIL-H-775	Hose, Rubber, Plastic, Fabric, or Metal (Including Tubing); and Fittings, Nozzles and Strainers, Packaging of	Packaging
MIL-D-1000	Drawings, Engineering, and Associated Lists	Drawing requirements
MIL-P-4861	Packings, Preformed, Rubber, Packing, Packaging of	Corrosion control, packaging
MIL-C-5501E	Caps and Plugs, Protective, Dust and Moisture Seal	Hardware
MIL-P-5517	Plastic Parts in Aircraft Hydraulic Equipment; General Test for	Special test
MIL-H-5540B	Adhesive, Poloychoroprene	Process
MIL-C-5541B	Chemical Film for Aluminum and Aluminum Alloys	Process
MIL-P-5673	Pin, Straight, Headed	Hardware
MIL-B-6812B	Bolt, Aircraft	Hardware
MIL-I-6866B(ASG)	Inspection, Penetrant Method of	Inspection procedure
MIL-I-6868D	Inspection Process, Magnetic Particle	Inspection procedure

MIL-I-6870	Inspection Requirements, Nondestructive, for Aircraft Materials and Parts	Inspection procedure
MIL-F-7179	Finishes and Coatings, General Specification for	Aircraft finishes
MIL-R-7674	Rivet, Aluminum and Aluminum Alloy	Hardware
MIL-S-7742	Screw Threads, Standard Aeronautical	Hardware
MIL-S-7839	Screw, Structural, Aircraft	Hardware
MIL-I-8500B	Interchangeability and Replaceability of Component Parts for Aircraft (Including Guided Missiles)	Includes electrical system
MIL-H-8501B	Helicopter Flying and Ground Handling Qualities, General Requirements for	Design requirements
MIL-A-8625C	Anodic Coatings, for Aluminum and Aluminum Alloys	Corrosion protection
MIL-D-8706B	Data and Test, Engineering: Contract Requirements for Aircraft Weapons Systems	Inspections and tests
MIL-F-8789	Fitting End, Attachable Hydraulic and Pneumatic, High-Pressure Hose	Hardware
MIL-A-00860A(USAF)	Airplane Strength and Rigidity, General Specification for	Design requirements
MIL-A-00861(USAF)	Airplane Strength and Rigidity, Flight Loads	Design requirements
MIL-A-008865(USAF)	Airplane Strength and Rigidity, Miscellaneous Loads	Design requirements

MIL-A-8866(ASG)	Airplane Strength and Rigidity, Reliability Requirements, Repeated Loads, and Fatigue	Design requirements
MIL-A-8870(ASG)	Airplane Strength and Rigidity, Vibration, Flutter, and Divergence	Design requirements
MIL-C-8956A	Clamps, Loop, Tube Support	Hardware
MIL-F-9490C	Flight Control Systems-Design, Installation and Test of, Piloted Aircraft, General Specification for	Design requirements
MIL-Q-9858A	Quality Program Requirement	Quality assurance
MIL-L-9909(USAF)	Light, Ultraviolet, Examining	Inspection procedure
MIL-C-11796	Corrosion Preventive, Petroleum, Hot Application	Corrosion protection
MIL-S-13572B	Spring, Helical, Compression and Extension	Hardware
MIL-F-18240D	Fastner, Externally Threaded 250 Deg. F, Self-Locking Element for (ASG)	Hardware
MIL-F-18372(AER)	Flight Control System; Design, Installation and Test of Aircraft (General Specification for)	Design requirements
MIL-P-21143	Pins, Straight, Headless (Dawel) (Over Nominal Size)	Hardware
MIL-R-21248B	Rings, Retaining (Tapered and Reduced Section Type)	Hardware
MIL-C-23217B	Coating, Aluminum, Vacuum Deposited	Process
MIL-N-25027D	Nut, Self-Locking, 250 Deg. F, and 800 Deg. F, 125 Ksi Ftu, and 30 Ksi Ftu (ASG)	Hardware

MIL-C-25427A	Coupling Assembly, Hydraulic, Self-Sealing, Quick Disconnect	Hardware
MIL-C-26074B	Coating, Nickel-Phosphorus, Electroless Nickel, Requirements for	Process
MIL-I-45208A	Inspection System Requirements	Inspection procedure
MIL-T-50301(MU)	Quality Control System, Requirements for	Quality assurance
MIL-C-52078	Cap-Plug, Cap, and Plug, Protective, Plastic, Dust and Moisture Seal	Hardware
MIL-C-81740(AS)	Coatings, Aluminum and Aluminum Alloys (Metallic Compound Decomposition)	Process

APPENDIX IV
DOCUMENT ANALYSIS

The analysis of the hydraulic system related documentation is presented in this appendix. Each document was classified into one of five major classifications.

- Hydraulic System Documents, Figure 23
- Hydraulic Controls Subsystem Documents, Figure 24
- Hydraulic Servo Subsystem Documents, Figure 25
- Hydraulic Pressure Subsystem Documents, Figure 26
- Hydraulic System Components Documents, Figure 27

The analysis is presented in columnar format; the columnar headings used in this analysis are as follows:

Generic Classification – Generic classification of item controlled by the document.

Document Number – Military specification or standard number assigned to the document, document title, all active revisions, amendments, and supplements and the dates of each.

Deficiency — Abbreviated deficiency terms are presented in this column. Short descriptions of these reliability/maintainability related deficiencies are as follows:

1. Environmental Conditions. The document either does not address environmental conditions which are normally imposed on military helicopters, or merely implies this mission design requirement by way of performance, physical tests, or specific environmental conditions.

2. Interchangeability. The document is devoid of a requirement for similar assemblies, subassemblies, and replaceable parts to be interchangeable.

3. Standard Components. The document is devoid of a requirement to use standard components that consider the specific mission profile requirements.

4. Product Identification. The document is devoid of identifying features, i.e., color, nameplates, or markings which identify the item governed by the specification.

5. Workmanship. The document is devoid of a workmanship requirement, or a standard is merely implied in ambiguous terms.

6. Safety. The document is devoid of safety requirements for personnel and equipment.

7. Reliability. The document is devoid of reliability program requirements that consider the mission requirements.

8. Maintainability. The document is devoid of maintainability program requirements that consider the mission requirements.

9. Electromagnetic Interference. The document is devoid of electromagnetic interference requirements for electrically controlled devices.

10. Human Engineering. The document is devoid of human engineering requirements.

11. Qualification Test Responsibility. The document either is devoid of qualification testing or merely implies this function as required by Quality Assurance Inspection.

12. Qualification Retest. The document either is devoid of definitive qualification retesting procedures or merely implies retesting in case of quality conformance test failures.

13. Reliability Demonstration. The document either is devoid of reliability demonstration testing or implies reliability by quantitative "life" testing.

14. Maintainability Demonstration. The document is devoid of maintainability demonstration testing.

15. Environmental Tests. Either the document is devoid of environmental testing, or those requirements are not meaningful as delineated in MIL-STD-810B.

16. Qualification Sampling. The document either is devoid of qualification test sampling or implies this function by requiring quality conformance sampling.

17. Qualification Test Plan. This document does not require qualification testing or the test plan requirement are ambiguous.

18. Quality Assurance Provisions. The document is devoid of quality assurance provisions or are stated in ambiguous terms.

19. Packing and Shipping. The document is devoid of requirements for packing and shipping of components governed by this specification.

20. Performance. The document is devoid of requirements for the component to meet or exceed the performance requirements established by the mission profile.

21. Design. The document references other documents for the design requirements. This is considered inadequate.

GENERIC CLASSIFICATION	DOCUMENT NUMBER, TITLE, REVISION, AMENDMENT, SUPPLEMENT AND DATES	DEFICIENCY	POTENTIAL RELIABILITY/ MAINTAINABILITY IMPACT
Hydraulic System	MIL-HDBK-692 (MR) Military Standardization Handbook - A Guide to the Selection of Rubber O-Rings, dated 20 October 1964	General: No direct deficiencies were noted that impact the reliability or maintainability of the system.	Insignificant
	MIL-H-5440F Hydraulic Systems, Aircraft, Types I and II, Design and Installation Requirements for, dated 18 January 1972	Design Requirements:	
		o Standard Components	Significant
		o Environmental Conditions	Significant
		o The requirement for fluid compatibility does not consider the possibility of introducing newer fluids such as MIL-H-83282 in future designs of Army helicopters.	Insignificant
		o Workmanship	Significant
		o Safety	Significant
		o Reliability	Significant
		o Maintainability	Significant
		o Electromagnetic Interference	Insignificant

Figure 23. Hydraulic System Document Deficiency Analysis.

GENERIC CLASSIFICATION	DOCUMENT NUMBER, TITLE, REVISION, AMENDMENT, SUPPLEMENT AND DATES	DEFICIENCY	POTENTIAL RELIABILITY/ MAINTAINABILITY IMPACT
		Qualification Testing:	
		o Qualification Test Plan	Significant
		o Environmental Tests	Significant
		o Qualification Test Responsibility	Insignificant
		o Qualification Sampling	Significant
		o Qualification Retest	Significant
		o Reliability Demonstration	Significant
		o Maintainability Demonstration	Significant
	MIL-H-8775C Hydraulic System Components, Aircraft and Missiles, General Specification for, dated 8 January 1964	Design Requirements:	
		o Standard Components	Significant
		o Environmental Conditions	Significant
		o Workmanship	Significant
		o Safety	Significant
		o Maintainability	Significant
		o Electromagnetic Interference	Insignificant
		o Human Engineering	Significant
		Qualification Testing:	
		o Qualification Test Plan	Insignificant
		o Qualification Retest	Insignificant

Figure 23 - Continued.

GENERIC CLASSIFICATION	DOCUMENT NUMBER, TITLE, REVISION, AMENDMENT, SUPPLEMENT AND DATES	DEFICIENCY	POTENTIAL RELIABILITY/ MAINTAINABILITY IMPACT
		o Reliability Demonstration	Significant
		o Maintainability Demonstration	Significant
		o Environmental Tests	Significant
	MIL-H-8890 (ASG)	Design Requirements:	
	Hydraulic Components Type III (-65° to +140°F), General Specification for, dated 1 November 1961	o Environmental Conditions	Significant
		o Reliability	Significant
		o Maintainability	Significant
		o Electromagnetic Interference	Insignificant
		o Human Engineering	Significant
		Qualification Testing:	
		o Qualification Test Plan	Insignificant
		o Qualification Sampling	Insignificant
		o Qualification Retest	Major
		o Reliability Demonstration	Significant
		o Maintainability Demonstration	Significant
		o Environmental Tests	Significant

Figure 23 - Continued.

GENERIC CLASSIFICATION	DOCUMENT NUMBER, TITLE, REVISION, AMENDMENT, SUPPLEMENT AND DATES	DEFICIENCY	POTENTIAL RELIABILITY/ MAINTAINABILITY IMPACT
	MIL-H-8891 (ASG)	Design Requirements:	
	Hydraulic Systems, Manned Flight Vehicles, Type III, Design, Installation, and Data Requirements for, dated 1 November 1961	o Standard Components	Significant
		o Interchangeability	Insignificant
		o Environmental Conditions	Significant
		o Product Identification	Insignificant
		o Workmanship	Insignificant
		o Safety	Significant
		o Maintainability	Significant
		o Electromagnetic Interference	Insignificant
		o Human Engineering	Significant
		Qualification Testing:	
		o Qualification Test Plan	Significant
		o Qualification Test Responsibility	Insignificant
		o Qualification Sampling	Significant
		o Qualification Retest	Significant
		o Reliability Demonstration	Significant
		o Maintainability Demonstration	Significant
		o Environmental Tests	Significant

Figure 23 - Continued.

GENERIC CLASSIFICATION	DOCUMENT NUMBER, TITLE, REVISION, AMENDMENT, SUPPLEMENT AND DATES	DEFICIENCY	POTENTIAL RELIABILITY/ MAINTAINABILITY IMPACT
		Quality Assurance Requirements and Provisions:	
		Packing and Shipping	Significant
	MIL-H-25475B	Design Requirements:	
	Hydraulic Systems, Missile, Design, Installation and Test, General Requirements for, dated 29 April 1971	o Safety	Significant
		o Reliability	Significant
		o Maintainability	Significant
		o Electromagnetic Interference	Significant
		o Human Engineering	Significant
		Qualification Testing:	
		o Qualification Test Plan	Significant
		o Qualification Retest	Insignificant
		o Qualification Sampling	Significant
		o Qualification Test Responsibility	Insignificant
		o Reliability Demonstration	Significant
		o Maintainability Demonstration	Significant
		o Environmental Tests	Significant

Figure 23 - Continued.

GENERIC CLASSIFICATION	DOCUMENT NUMBER, TITLE, REVISION, AMENDMENT, SUPPLEMENT AND DATES	DEFICIENCY	POTENTIAL RELIABILITY/ MAINTAINABILITY IMPACT
		Quality Assurance Requirements and Provisions:	
		Packing and Shipping	Insignificant
	MIL-S-8698 (ASG)	General:	
	Structural Design Requirements, Helicopters, dated 1 July 1954 Amendment 1, dated 28 February 1958	No deficiencies that impact the reliability or maintainability of the system were noted, as this document addresses generally the structural design of the helicopter.	Insignificant
	MIL-I-6181D	General:	
	Interference Control Requirements, Aircraft Equipment, dated 25 November 1959 Notice 6, dated 24 July 1969	No deficiencies that impact the reliability or maintainability of the system were noted. This document generally covers interference requirements for aircraft equipment. This document has been superseded by MIL-STD-461A.	Insignificant

Figure 23 - Continued.

GENERIC CLASSIFICATION	DOCUMENT NUMBER, TITLE, REVISION, AMENDMENT, SUPPLEMENT AND DATES	DEFICIENCY	POTENTIAL RELIABILITY/ MAINTAINABILITY IMPACT
	MIL-C-18244A (WEP) Control and Stabilization Systems: Automatic, Piloted Aircraft, General Specification for, dated 1 December 1962	Design Requirements:	
		o Standard Components	Significant
		o Environmental Conditions	Significant
		o Safety	Significant
		o Maintainability	Significant
		o Human Engineering	Significant
		Qualification Testing:	
		o Reliability Demonstration	Significant
		o Maintainability Demonstration	Significant
		o Environmental Tests	Significant
Testing/ Demonstration Requirements	MIL-D-23222A (AS) Demonstration Requirements for Helicopters, dated 18 March 1971	General: No deficiencies that impact the reliability or maintainability of the system were noted, since this document is a test specification. This test specification appears to consider only U.S. Navy requirements and not the requirements of other	Major

Figure 23 - Continued.

GENERIC CLASSIFICATION	DOCUMENT NUMBER, TITLE, REVISION, AMENDMENT, SUPPLEMENT AND DATES	DEFICIENCY	POTENTIAL RELIABILITY/ MAINTAINABILITY IMPACT
		services, although it could reasonably be imposed by interpolating some of the Navy requirements to Army test requirements.	
	MIL-T-5522C Test Procedure for Aircraft Hydraulic and Pneumatic Systems, General, dated 25 March 1966	Qualification Testing: o Qualification Test Plan o Environmental Tests	 Significant Significant
	MIL-E-5272C (ASG) Environmental Testing, Aeronautical and Associated Equipment, General Specification for, dated 13 April 1959 Amendment 2, dated 18 September 1970 Notice 1, dated 22 January 1971	General: This document is no longer considered applicable to new procurements of equipment, consequently was not reviewed. MIL-STD-810B is now the controlling document.	Major

Figure 23 - Continued.

GENERIC CLASSIFICATION	DOCUMENT NUMBER, TITLE, REVISION, AMENDMENT, SUPPLEMENT AND DATES	DEFICIENCY	POTENTIAL RELIABILITY/ MAINTAINABILITY IMPACT
	MIL-T-8679 Test Requirements, Ground, Helicopter, dated 5 March 1954	Qualification Testing:	
		o Qualification Test Plan	Significant
		o Reliability Demonstration	Significant
		o Maintainability Demonstration	Significant
		o Environmental Tests	Significant
Hydraulic Rubber Components	MIL-R-7362D Rubber, Synthetic, Solid, Sheet, Strip and Fabricated Parts, Synthetic Oil Resistant, dated 2 May 1967 Amendment 1, dated 8 July 1971	Design Requirements:	
		o Standard Components	Significant
		o Environmental Conditions	Significant
		o Workmanship	Significant
		o Safety	Significant
		o Reliability	Significant
		o Maintainability	Significant
		Qualification Testing:	
		o Qualification Test Responsibility	Insignificant
		o Qualification Retest	Significant
		o Reliability Demonstration	Significant
		o Environmental Tests	Significant

Figure 23 - Continued.

GENERIC CLASSIFICATION	DOCUMENT NUMBER, TITLE, REVISION, AMENDMENT, SUPPLEMENT AND DATES	DEFICIENCY	POTENTIAL RELIABILITY/ MAINTAINABILITY IMPACT
System Fluids	MIL-H-5606C Hydraulic Fluid, Petroleum Base; Aircraft, Missile, and Ordnance, dated 30 September 1971	Design Requirements: o Interchangeability o Safety o Human Engineering	 Significant
	MIL-H-6083C Hydraulic Fluid, Petroleum Base, for Preservation and Testing, dated 17 November 1965 Amendment 2, dated 6 June 1969	Design Requirements: o Workmanship o Safety o Human Engineering	 Significant Significant Significant
	MIL-H-8446B Hydraulic Fluid, Nonpetroleum Base, Aircraft, dated 12 March 1959 Amendment 1, dated 16 July 1959	Design Requirements: o Product Identification o Human Engineering	 Insignificant Significant

Figure 23 - Continued.

GENERIC CLASSIFICATION	DOCUMENT NUMBER, TITLE, REVISION, AMENDMENT, SUPPLEMENT AND DATES	DEFICIENCY	POTENTIAL RELIABILITY/ MAINTAINABILITY IMPACT
	MIL-H-83282 (USAF) Hydraulic Fluid, Fire Resistant Synthetic Hydrocarbon Base, Aircraft, dated 16 July 1970 Amendment 1, dated 6 June 1972	Design Requirements: o Product Identification o Safety o Human Engineering o Environmental Conditions	 Insignificant Significant Significant Major

Figure 23 - Continued.

GENERIC CLASSIFICATION	DOCUMENT NUMBER, TITLE, REVISION, AMENDMENT, SUPPLEMENT AND DATES	DEFICIENCY	POTENTIAL RELIABILITY/ MAINTAINABILITY IMPACT
Electro-hydraulic Controls	MIL-V-27162 Valves, Servo Control, Electrohydraulic, General Specification for, dated 6 October 1959	Design Requirements:	
		o Standard Components	Significant
		o Environmental Conditions	Significant
		o Maintainability	Significant
		o Electromagnetic Interference	Insignificant
		o Human Engineering	Significant
		Qualification Testing:	
		o Qualification Test Plans	Insignificant
		o Qualification Test Responsibility	Significant
		o Qualification Sampling	Significant
		o Qualification Retest	Significant
		o Reliability Demonstration	Significant
		o Maintainability Demonstration	Significant
		o Environmental Tests	Significant
		Quality Assurance Requirements and Provisions:	
		Quality Assurance Provisions	Significant

Figure 24. Hydraulic System Controls Document Deficiency Analysis.

GENERIC CLASSIFICATION	DOCUMENT NUMBER, TITLE, REVISION, AMENDMENT, SUPPLEMENT AND DATES	DEFICIENCY	POTENTIAL RELIABILITY/ MAINTAINABILITY IMPACT
Trim Valves	MIL-V-5529A	Design Requirements:	
	Valves, Hydraulic, Directional Control, dated 14 May 1951	o Environmental Conditions	Significant
		o Reliability	Significant
	Amendment 2, dated 28 June 1956	o Maintainability	Significant
		o Human Engineering	Significant
		Qualification Testing:	
		o Reliability Demonstration	Significant
		o Maintainability Demonstration	Significant
		o Environmental Tests	Significant
	MIL-V-7915	Design Requirements:	
	Valves; Hydraulic, Directional Control, Slide Selector, dated 15 April 1952	o Standard Components	Significant
		o Environmental Conditions	Significant
		o Reliability	Significant
	Amendment 2, dated 6 July 1956	o Maintainability	Significant
		o Electromagnetic Interference	Insignificant
		o Human Engineering	Significant

Figure 24 - Continued.

GENERIC CLASSIFICATION	DOCUMENT NUMBER, TITLE, REVISION, AMENDMENT, SUPPLEMENT AND DATES	DEFICIENCY	POTENTIAL RELIABILITY/ MAINTAINABILITY IMPACT
		Qualification Testing:	
		o Qualification Test Plans	Insignificant
		o Qualification Sampling	Insignificant
		o Reliability Demonstration	Significant
		o Maintainability Demonstration	Significant
		o Environmental Tests	Significant
		Quality Assurance Requirements and Provisions:	
		o Quality Assurance Provisions	Significant
Electrical Controls	MIL-B-5087B (ASG) Bonding, Electrical, and Lightning Protection, for Aerospace Systems, dated 15 October 1964 Amendment 2, dated 31 August 1970	Design Requirements:	
		o Workmanship	Insignificant
		o Human Engineering	Significant

Figure 24 - Continued.

GENERIC CLASSIFICATION	DOCUMENT NUMBER, TITLE, REVISION, AMENDMENT, SUPPLEMENT AND DATES	DEFICIENCY	POTENTIAL RELIABILITY/ MAINTAINABILITY IMPACT
	MIL-W-5088E Wiring, Aircraft, Selection and Installation of, dated 28 March 1972	Design Requirements:	
		o Environmental Conditions	Significant
		o Safety	Insignificant
		o Human Engineering	Significant
		Qualification Testing:	
		o Reliability Demonstration	Significant
		o Maintainability Demonstration	Significant
		o Environmental Tests	Significant
	MIL-E-7080B Electronic Equipment, Aircraft, Selection and Installation of, dated 6 June 1962 Amendment 3, dated 29 April 1968	Design Requirements:	
		o Standard Components	Significant
		o Environmental Conditions	Significant
		o Interchangeability	Significant
		o Safety	Significant
		o Reliability	Significant
		o Maintainability	Significant
		o Human Engineering	Significant

Figure 24 - Continued.

GENERIC CLASSIFICATION	DOCUMENT NUMBER, TITLE, REVISION, AMENDMENT, SUPPLEMENT AND DATES	DEFICIENCY	POTENTIAL RELIABILITY/ MAINTAINABILITY IMPACT
		Qualification Testing:	
		o Reliability Demonstration	Significant
		o Maintainability Demonstration	Significant
		o Environmental Tests	Significant
Solenoid Valves	MIL-V-46720 (ORD) Valves, Solenoid, Hydraulic, dated 31 May 1962 Amendment 1, dated 8 July 1963	General: This specification, by the intended use statement, is for nonaircraft. However, many of the provisions of this specification could become a basis for aircraft applications.	Major
Pressure Switch	MIL-S-8932 Switches, Pressure, Aircraft, General Specification for, dated 28 January 1965	Design Requirements:	
		o Standard Components	Significant
		o Environmental Conditions	Significant
		o Safety	Significant
		o Reliability	Significant
		o Maintainability	Significant

Figure 24 - Continued.

GENERIC CLASSIFICATION	DOCUMENT NUMBER TITLE, REVISION, AMENDMENT, SUPPLEMENT AND DATES	DEFICIENCY	POTENTIAL RELIABILITY/ MAINTAINABILITY IMPACT
		o Electromagnetic Interference	Insignificant
		o Human Engineering	Significant
		Qualification Testing:	
		o Qualification Test Plan	Insignificant
		o Qualification Test Responsibility	Insignificant
		o Qualification Retest	Significant
		o Reliability Demonstration	Significant
		o Maintainability Demonstration	Significant
		o Environmental Tests	Significant
Temperature Switch	MIL-T-7990B Transmitter, Temperature, Electrical Resistance, -70° to +300°C, dated 26 April 1966	Design Requirements:	
		o Safety	Significant
		o Reliability	Significant
		o Maintainability	Significant
		o Electromagnetic Interference	Insignificant
		o Human Engineering	Significant
		Qualification Testing:	
		o Reliability Demonstration	Significant
		o Maintainability Demonstration	Significant

Figure 24 - Continued.

GENERIC CLASSIFICATION	DOCUMENT NUMBER, TITLE, REVISION, AMENDMENT, SUPPLEMENT AND DATES	DEFICIENCY	POTENTIAL RELIABILITY/ MAINTAINABILITY IMPACT
		o Environmental Tests	Significant
Hydraulic Controls	MIL-H-8775C and MIL-H-8990	General: No specific document is provided for hydraulic controls; however, all controls are included by these two documents.	Insignificant
Manifold	No Military Specification is directly applicable to manifold assemblies.	General: Hydraulic manifold assemblies are made up of two or more generic types of components, such as filters, check valves, pressure regulating valves, etc. Governing specifications are required to assure that reliability, maintainability, and other disciplines are adequately incorporated along with the system functional requirements.	Major

Figure 24 - Continued.

GENERIC CLASSIFICATION	DOCUMENT NUMBER, TITLE, REVISION, AMENDMENT, SUPPLEMENT AND DATES	DEFICIENCY	POTENTIAL RELIABILITY/ MAINTAINABILITY IMPACT
Manual Valves	No applicable Military Specification was found to exist for manual control valves for helicopter applications.	General: Military specifications imposing reliability, maintainability, quality assurance, and qualification testing requirements and provisions are required to ensure that the design is compatible with the intended use.	Significant
Sequence Valves	No applicable Military Specification was found to exist for sequence control valves for helicopter applications.	General: Military specifications imposing reliability, maintainability, quality assurance, and qualification testing requirements and provisions are required to ensure that the design is compatible with the intended use.	Significant

Figure 24 - Continued.

GENERIC CLASSIFICATION	DOCUMENT NUMBER, TITLE, REVISION, AMENDMENT, SUPPLEMENT AND DATES	DEFICIENCY	POTENTIAL RELIABILITY/ MAINTAINABILITY IMPACT
Priority Valves	No applicable Military Specification was found to exist for priority valves for helicopter applications.	General: Military specifications imposing reliability, maintainability, quality assurance, and qualification testing requirements and provisions are required to ensure that the design is compatible with the intended use.	Significant
Shuttle Valves	MIL-V-5530B Valves, Aircraft Hydraulic Shuttle, dated 3 June 1964 Amendment 4, dated 24 March 1970	Design Requirements:	
		o Environmental Conditions	Significant
		o Interchangeability	Insignificant
		o Workmanship	Significant
		o Safety	Significant
		o Reliability	Significant
		o Maintainability	Significant
		o Human Engineering	Significant
		Qualification Testing:	
		o Reliability Demonstration	Significant
		o Environmental Tests	Significant

Figure 24 - Continued.

GENERIC CLASSIFICATION	DOCUMENT NUMBER, TITLE, REVISION, AMENDMENT, SUPPLEMENT AND DATES	DEFICIENCY	POTENTIAL RELIABILITY/ MAINTAINABILITY IMPACT
		Quality Assurance Requirements and Provisions:	
		o Quality Assurance Provisions	Insignificant
		o Packing and Shipping	Insignificant
	MIL-V-19068A (ASG) Valves, Shuttle Hydraulic, Aircraft, Type II Systems, dated 30 April 1957	Design Requirements:	
		o Interchangeability	Significant
		o Design	Insignificant
		o Product Identification	Insignificant
		o Workmanship	Significant
		o Safety	Significant
		o Reliability	Significant
		o Maintainability	Significant
		o Human Engineering	Significant
		Qualification Testing:	
		o Qualification Sampling	Significant
		o Qualification Retest	Significant
		o Reliability Demonstration	Significant
		o Maintainability Demonstration	Significant

Figure 24 - Continued.

GENERIC CLASSIFICATION	DOCUMENT NUMBER, TITLE, REVISION, AMENDMENT, SUPPLEMENT AND DATES	DEFICIENCY	POTENTIAL RELIABILITY/ MAINTAINABILITY IMPACT
		o Environmental Tests	Significant
		Quality Assurance Requirements and Provisions:	
		o Quality Assurance Provisions	Significant
		o Packing and Shipping	Insignificant
Flow Regulators	MIL-V-25517A (ASG) Valve, Aircraft Hydraulic Restrictor, dated 24 July 1959	Design Requirements:	
		o Standard Components	Significant
		o Environmental Conditions	Significant
		o Interchangeability	Insignificant
		o Workmanship	Significant
		o Safety	Significant
		o Reliability	Significant
		o Maintainability	Significant
		o Human Engineering	Significant
		Qualification Testing:	
		o Qualification Test Plan	Significant
		o Qualification Sampling	Insignificant

Figure 24 - Continued.

GENERIC CLASSIFICATION	DOCUMENT NUMBER, TITLE, REVISION, AMENDMENT, SUPPLEMENT AND DATES	DEFICIENCY	POTENTIAL RELIABILITY/ MAINTAINABILITY IMPACT
		o Reliability Demonstration	Significant
		o Maintainability Demonstration	Significant
		o Environmental Tests	Significant
	MIL-V-8566A Valves; Aircraft Hydraulic Flow Regulator, dated 24 June 1964	Design Requirements:	
		o Environmental Conditions	Significant
		o Interchangeability	Insignificant
		o Workmanship	Significant
		o Safety	Significant
		o Reliability	Significant
		o Maintainability	Significant
		o Human Engineering	Significant
		Qualification Testing:	
		o Reliability Demonstration	Significant
		o Maintainability Demonstration	Significant
		o Environmental Tests	Significant

Figure 24 - Continued.

GENERIC CLASSIFICATION	DOCUMENT NUMBER, TITLE, REVISION, AMENDMENT, SUPPLEMENT AND DATES	DEFICIENCY	POTENTIAL RELIABILITY/ MAINTAINABILITY IMPACT
Hydraulic Fuse	MIL-F-5508B Fuses, Aircraft Automatic Quantity — Measuring, Hydraulic, dated 14 April 1964 Amendment 1, dated 20 August 1971	General:	
		Design	Insignificant
		Design Requirements:	
		o Environmental Conditions	Significant
		o Interchangeability	Significant
		o Workmanship	Significant
		o Safety	Significant
		o Reliability	Significant
		o Maintainability	Significant
		o Human Engineering	Significant
		Qualification Testing:	
		o Reliability	Significant
		o Maintainability Demonstration	Significant
		o Environmental Tests	Significant

Figure 24 - Continued.

GENERIC CLASSIFICATION	DOCUMENT NUMBER, TITLE, REVISION, AMENDMENT, SUPPLEMENT AND DATES	DEFICIENCY	POTENTIAL RELIABILITY/ MAINTAINABILITY IMPACT
Pneumatic Controls	MIL-P-5518C Pneumatic Systems, Aircraft; Design, Installation, and Data Requirements for, dated 9 July 1962 Supplement 1, dated 9 July 1969 Interim Amendment 1 (USAF), dated 3 December 1968	Design Requirements:	
		o Standard Components	Significant
		o Environmental Conditions	Significant
		o Interchangeability	Significant
		o Reliability	Significant
		o Maintainability	Significant
		o Human Engineering	Significant
	MIL-P-8564D Pneumatic System Components, Aeronautical, General Specification for, dated 18 November 1970	Design Requirements:	
		o Workmanship	Insignificant
		o Safety	Significant
		o Reliability	Significant
		o Maintainability	Significant
		o Electromagnetic Interference	Significant
		o Human Engineering	Significant

Figure 24 - Continued.

GENERIC CLASSIFICATION	DOCUMENT NUMBER, TITLE, REVISION, AMENDMENT, SUPPLEMENT AND DATES	DEFICIENCY	POTENTIAL RELIABILITY/ MAINTAINABILITY IMPACT
		Qualification Testing:	
		o Qualification Test Plan	Insignificant
		o Qualification Test Responsibility	Insignificant
		o Qualification Sampling	Significant
		o Qualification Retest	Significant
		o Maintainability Demonstration	Significant
		o Environmental Tests	Significant
		Quality Assurance Requirements and Provisions:	
		Quality Assurance Provisions	Significant
Air Reservoirs	MIL-R-8573A (ASG)	Design Requirements:	
	Reservoirs, Air, Nonshatterable Steel, dated 31 July 1957	o Performance	Significant
		o Standard Components	Significant
	Amendment 4, dated 14 March 1968	o Environmental Conditions	Significant
		o Interchangeability	Significant
		o Safety	Significant
		o Reliability	Significant

Figure 24 - Continued.

GENERIC CLASSIFICATION	DOCUMENT NUMBER, TITLE, REVISION, AMENDMENT, SUPPLEMENT AND DATES	DEFICIENCY	POTENTIAL RELIABILITY/ MAINTAINABILITY IMPACT
		o Maintainability	Significant
		o Human Engineering	Significant
		Qualification Testing:	
		o Reliability Demonstration	Significant
		o Maintainability Demonstration	Significant
		o Environmental Tests	Significant
	MIL-T-25363C (USAF)	Design Requirements:	
	Tank, Pneumatic Pressure, Aircraft, Glass Fiber, dated 2 June 1969	o Interchangeability	Significant
		o Safety	Significant
		o Maintainability	Significant
		o Human Engineering	Significant
		Qualification Testing:	
		o Reliability Demonstration	Significant
		o Maintainability Demonstration	Significant
		o Environmental Tests	Significant

Figure 24 - Continued.

GENERIC CLASSIFICATION	DOCUMENT NUMBER, TITLE, REVISION, AMENDMENT, SUPPLEMENT AND DATES	DEFICIENCY	POTENTIAL RELIABILITY/ MAINTAINABILITY IMPACT
Valve Cylinder	MIL-C-8838 (ASG)	Design Requirements:	
	Cylinder, Pneumatic Actuating, Aircraft Utility System, General Specification for, dated 3 June 1958	o Standard Components	Significant
		o Environmental Conditions	Significant
		o Interchangeability	Significant
		o Safety	Significant
		o Reliability	Significant
		o Human Engineering	Significant
		Qualification Testing:	
		o Qualification Test Plan	Insignificant
		o Qualification Sampling	Significant
		o Qualification Retest	Significant
		o Reliability Demonstration	Significant
		o Maintainability Demonstration	Significant
		o Environmental Tests	Significant
	MIL-R-8572A (Aer)	General:	
	Reducers, Pneumatic Pressure, Aircraft, dated 5 October 1954	Design	Significant

Figure 24 - Continued.

GENERIC CLASSIFICATION	DOCUMENT NUMBER, TITLE, REVISION, AMENDMENT, SUPPLEMENT AND DATES	DEFICIENCY	POTENTIAL RELIABILITY/ MAINTAINABILITY IMPACT
		Design Requirements:	
		o Standard Components	Significant
		o Environmental Conditions	Significant
		o Workmanship	Significant
		o Product Identification	Insignificant
		o Safety	Significant
		o Reliability	Significant
		o Maintainability	Significant
		o Human Engineering	Significant
		Qualification Testing:	
		o Qualification Test Plan	Insignificant
		o Qualification Sampling	Significant
		o Qualification Retest	Significant
		o Reliability Demonstration	Significant
		o Maintainability Demonstration	Significant
		o Environmental Tests	Significant

Figure 24 - Continued.

GENERIC CLASSIFICATION	DOCUMENT NUMBER, TITLE, REVISION, AMENDMENT, SUPPLEMENT AND DATES	DEFICIENCY	POTENTIAL RELIABILITY/ MAINTAINABILITY IMPACT
		Quality Assurance Requirements and Provisions:	
		o Quality Assurance Provisions	Significant
		o Packing and Shipping	Significant

Figure 24 - Continued.

GENERIC CLASSIFICATION	DOCUMENT NUMBER, TITLE, REVISION, AMENDMENT, SUPPLEMENT AND DATES	DEFICIENCY	POTENTIAL RELIABILITY/ MAINTAINABILITY IMPACT
Hydraulic Actuators	MIL-C-5503C Cylinders; Aeronautical, Hydraulic Actuating, General Requirements for, dated 27 June 1963 Amendment 4, dated 26 April 1972	Design Requirements:	
		o Standard Components	Significant
		o Environmental Conditions	Significant
		o Workmanship	Significant
		o Safety	Significant
		o Reliability	Significant
		o Maintainability	Significant
		o Human Engineering	Significant
		Qualification Testing:	
		o Qualification Test Responsibility	Significant
		o Qualification Retest	Significant
		o Reliability Demonstration	Significant
		o Maintainability Demonstration	Significant
		o Environmental Tests	Significant

Figure 25. Hydraulic Servo Subsystem Document Deficiency Analysis.

GENERIC CLASSIFICATION	DOCUMENT NUMBER, TITLE, REVISION, AMENDMENT, SUPPLEMENT AND DATES	DEFICIENCY	POTENTIAL RELIABILITY/ MAINTAINABILITY IMPACT
Servo-controlled Actuating Cylinders	No Military Specification for this generic classification was found.	General: When military specifications do not exist for hydraulic components designed and manufactured for U.S. Army use, there is a possibility of inadequate reliability and maintainability requirements being imposed during the design of the component.	Significant
Hydraulically Actuated Brakes	MIL-B-8584C Brake Systems, Wheel, Aircraft, Design of, dated 12 August 1970	Design Requirements:	
		o Environmental Conditions	Significant
		o Interchangeability	Significant
		o Safety	Significant
		o Reliability	Significant
		o Maintainability	Significant
		o Human Engineering	Significant
		Qualification Testing:	
		Qualification Test Plan	Major

Figure 25 - Continued.

GENERIC CLASSIFICATION	DOCUMENT NUMBER, TITLE, REVISION, AMENDMENT, SUPPLEMENT AND DATES	DEFICIENCY	POTENTIAL RELIABILITY/ MAINTAINABILITY IMPACT
		Quality Assurance Requirements and Provisions:	
		Quality Assurance Provisions	Major
Wheel Brakes	MIL-W-5013H	Design Requirements:	
	Wheel and Brake Assemblies; Aircraft, dated 5 April 1971	o Standard Components	Significant
		o Environmental Conditions	Significant
	Amendment 1, dated 14 September 1971	o Interchangeability	Significant
		o Safety	Significant
		o Human Engineering	Significant
		Qualification Testing:	
		o Qualification Retest	Significant
		o Reliability Demonstration	Significant
		o Maintainability Demonstration	Significant
		o Environmental Tests	Significant

Figure 25 - Continued.

GENERIC CLASSIFICATION	DOCUMENT NUMBER, TITLE, REVISION, AMENDMENT, SUPPLEMENT AND DATES	DEFICIENCY	POTENTIAL RELIABILITY/ MAINTAINABILITY IMPACT
	MIL-C-14055C Cup, Hydraulic Brake Actuating Cylinder; Synthetic Rubber (General Specification for), dated 10 July 1967	General: The document is not applicable to aircraft or helicopters.	Significant
	MIL-V-5525C Valves, Aircraft Power Brake, dated 21 October 1959	Design Requirements:	
		o Standard Components	Significant
		o Environmental Conditions	Significant
		o Interchangeability	Insignificant
		o Product Identification	Insignificant
		o Workmanship	Significant
		o Safety	Significant
		o Reliability	Significant
		o Maintainability	Significant
		o Human Engineering	Significant
		Qualification Testing:	
		o Qualification Retest	Insignificant
		o Reliability Demonstration	Significant

Figure 25 - Continued.

GENERIC CLASSIFICATION	DOCUMENT NUMBER, TITLE, REVISION, AMENDMENT, SUPPLEMENT AND DATES	DEFICIENCY	POTENTIAL RELIABILITY/ MAINTAINABILITY IMPACT
		o Maintainability Demonstration	Significant
		o Environmental Tests	Significant
		Quality Assurance Requirements and Provisions:	
		Quality Assurance Provisions	Insignificant
Hydraulic Rotor Brake	No applicable Military Specification was found to exist for hydraulic rotor brake subsystems.	General:	
		Military specifications imposing reliability, maintainability, quality assurance, and qualification testing requirements and provisions are required to ensure that the design is compatible with the intended use.	Major

Figure 25 - Continued.

GENERIC CLASSIFICATION	DOCUMENT NUMBER, TITLE, REVISION, AMENDMENT, SUPPLEMENT AND DATES	DEFICIENCY	POTENTIAL RELIABILITY/ MAINTAINABILITY IMPACT
Irreversible Valves	No specific Military Specification documentation could be found for components under this classification.	General: When military specifications do not exist for hydraulic components such as irreversible valves that are designed and manufactured for U.S. Army use, there is a possibility of inadequate reliability and maintainability requirements being imposed.	Major
Hydraulic Engine Starting Motors	MIL-S-22999A (WEP) Starter: Aircraft Engine, Hydraulic, dated 3 February 1964 Amendment 1, dated 3 June 1965	Design Requirements:	
		o Safety	Significant
		o Reliability	Significant
		o Maintainability	Significant
		o Human Engineering	Significant
		Qualification Testing:	
		o Qualification Retest	Significant
		o Reliability Demonstration	Significant
		o Maintainability Demonstration	Significant
		o Environmental Tests	Significant

Figure 25 - Continued.

GENERIC CLASSIFICATION	DOCUMENT NUMBER, TITLE, REVISION, AMENDMENT, SUPPLEMENT AND DATES	DEFICIENCY	POTENTIAL RELIABILITY/ MAINTAINABILITY IMPACT
Hydraulic Accessory Drive Units	MIL-M-7997A Motors, Aircraft Hydraulic, Constant Displacement, dated 27 April 1956 Amendment 1, dated 23 February 1961	Design Requirements:	
		o Standard Components	Significant
		o Environmental Conditions	Significant
		o Safety	Significant
		o Maintainability	Significant
		o Human Engineering	Significant
		Qualification Testing:	
		o Qualification Test Responsibility	Insignificant
		o Reliability Demonstration	Significant
		o Maintainability Demonstration	Significant
		o Environmental Tests	Significant

Figure 25 - Continued.

GENERIC CLASSIFICATION	DOCUMENT NUMBER, TITLE, REVISION, AMENDMENT, SUPPLEMENT AND DATES	DEFICIENCY	POTENTIAL RELIABILITY/ MAINTAINABILITY IMPACT
Hydraulic Reservoirs	MIL-R-5520C Reservoirs: Aircraft, Hydraulic Non-Separated Type, dated 30 June 1964 Amendment 1, dated 21 March 1969	Design Requirements:	
		o Standard Components	Significant
		o Interchangeability	Insignificant
		o Workmanship	Significant
		o Safety	Significant
		o Reliability	Significant
		o Maintainability	Significant
		o Human Engineering	Significant
		Qualification Testing:	
		o Qualification Test Plans	Insignificant
		o Qualification Sampling	Significant
		o Qualification Retest	Significant
		o Reliability Demonstration	Significant
		o Maintainability Demonstration	Significant
		o Environmental Tests	Significant

Figure 26. Hydraulic Pressure Subsystem Document Deficiency Analysis.

GENERIC CLASSIFICATION	DOCUMENT NUMBER, TITLE, REVISION, AMENDMENT, SUPPLEMENT AND DATES	DEFICIENCY	POTENTIAL RELIABILITY/ MAINTAINABILITY IMPACT
	MIL-R-8931 Reservoirs; Aircraft and Missile, Hydraulic, Separated Type, dated 30 June 1964 Amendment 1, dated 10 May 1972	Design Requirements:	
		o Standard Components	Significant
		o Environmental Conditions	Significant
		o Interchangeability	Insignificant
		o Workmanship	Significant
		o Safety	Significant
		o Maintainability	Significant
		o Human Engineering	Significant
		Qualification Testing:	
		o Qualification Sampling	Significant
		o Qualification Retest	Significant
		o Reliability Demonstration	Significant
		o Maintainability Demonstration	Significant
		o Environmental Tests	Significant
Hydraulic Accumulators	MIL-A-8897A Accumulators, Hydraulic, Cylindrical, 3,000 PSI, Aircraft, Type II Systems, dated 18 May 1963	Design Requirements:	
		o Standard Components	Significant
		o Environmental Conditions	Significant
		o Interchangeability	Insignificant

Figure 26 - Continued.

GENERIC CLASSIFICATION	DOCUMENT NUMBER, TITLE, REVISION, AMENDMENT, SUPPLEMENT AND DATES	DEFICIENCY	POTENTIAL RELIABILITY/ MAINTAINABILITY IMPACT
		o Workmanship	Significant
		o Safety	Significant
		o Reliability	Significant
		o Maintainability	Significant
		o Human Engineering	Significant
		Qualification Testing:	
		o Qualification Test Plan	Insignificant
		o Qualification Sampling	Significant
		o Qualification Retest	Significant
		o Reliability Demonstration	Significant
		o Maintainability Demonstration	Significant
		o Environmental Tests	Significant
	MIL-A-5498C (ASG) Accumulators, Aircraft Hydropneumatic Pressure, dated 25 February 1957	Design Requirements:	
		o Interchangeability	Insignificant
		o Workmanship	Significant
		o Safety	Significant
		o Reliability	Significant
		o Maintainability	Significant

Figure 26 - Continued.

GENERIC CLASSIFICATION	DOCUMENT NUMBER, TITLE, REVISION, AMENDMENT, SUPPLEMENT AND DATES	DEFICIENCY	POTENTIAL RELIABILITY/ MAINTAINABILITY IMPACT
		o Human Engineering	Significant
		Qualification Testing:	
		o Qualification Sampling	Significant
		o Qualification Retest	Significant
		o Reliability Demonstration	Significant
		o Maintainability Demonstration	Significant
		o Environmental Tests	Significant
	MIL-A-52689 (ME) Accumulators; Hydraulic, dated 18 June 1970	General: This document is not intended for aircraft or helicopter use.	Major
Hydraulic Manual Pumps	MIL-P-5515C Pump, Hydraulic, RAM, Hand Driven, dated 17 May 1972	Design Requirements:	
		o Environmental Conditions	Significant
		o Interchangeability	Insignificant
		o Product Identification	Insignificant
		o Workmanship	Significant
		o Safety	Significant

Figure 26 - Continued.

GENERIC CLASSIFICATION	DOCUMENT NUMBER, TITLE, REVISION, AMENDMENT, SUPPLEMENT AND DATES	DEFICIENCY	POTENTIAL RELIABILITY/ MAINTAINABILITY IMPACT
		o Reliability	Significant
		o Maintainability	Significant
		o Human Engineering	Significant
		Qualification Testing:	
		o Qualification Sampling	Significant
		o Qualification Retest	Significant
		o Reliability Demonstration	Significant
		o Maintainability Demonstration	Significant
		o Environmental Tests	Significant
	MIL-C-6026B	Design Requirements:	
	Control Unit, Pressure Generating, Manually Operated, Aircraft Hydraulic Brake System, dated 9 October 1959	o Standard Components	Significant
		o Environmental Conditions	Significant
		o Part Identification	Insignificant
		o Workmanship	Significant
		o Safety	Significant
		o Reliability	Significant
		o Maintainability	Significant
		o Human Engineering	Significant

Figure 26 - Continued.

GENERIC CLASSIFICATION	DOCUMENT NUMBER, TITLE, REVISION, AMENDMENT, SUPPLEMENT AND DATES	DEFICIENCY	POTENTIAL RELIABILITY/ MAINTAINABILITY IMPACT
		Qualification Testing:	
		o Qualification Test Plan	Significant
		o Qualification Test Responsibility	Insignificant
		o Qualification Sampling	Significant
		o Reliability Demonstration	Significant
		o Maintainability Demonstration	Significant
		o Environmental Tests	Significant
		Quality Assurance Requirements and Provisions:	
		Quality Assurance Provisions	Significant
Hydraulic-Driven Pumps	MIL-P-19692B Pumps, Hydraulic, Variable Delivery, General Specification for, dated 3 July 1963	Design Requirements:	
		o Standard Components	Significant
		o Interchangeability	Insignificant
		o Workmanship	Significant
		o Safety	Significant
		o Reliability	Significant
		o Maintainability	Significant
		o Human Engineering	Significant

Figure 26 - Continued.

GENERIC CLASSIFICATION	DOCUMENT NUMBER, TITLE, REVISION, AMENDMENT, SUPPLEMENT AND DATES	DEFICIENCY	POTENTIAL RELIABILITY/ MAINTAINABILITY IMPACT
		Qualification Testing:	
		o Qualification Retest	Significant
		o Maintainability Demonstration	Significant
		o Environmental Tests	Significant
	MIL-P-7858 Pump, Hydraulic, Power Driven, Fixed Displacement, dated 4 April 1952 Amendment 2, dated 17 April 1956	Design Requirements:	
		o Environmental Conditions	Significant
		o Safety	Significant
		o Reliability	Significant
		o Maintainability	Significant
		o Human Engineering	Significant
		Qualification Testing:	
		o Qualification Retest	Significant
		o Reliability Demonstration	Significant
		o Maintainability Demonstration	Significant
		o Environmental Tests	Significant

Figure 26 - Continued.

GENERIC CLASSIFICATION	DOCUMENT NUMBER, TITLE, REVISION, AMENDMENT, SUPPLEMENT AND DATES	DEFICIENCY	POTENTIAL RELIABILITY/ MAINTAINABILITY IMPACT
	MIL-P-5994C Pump, Hydraulic, Electric-Motor-Driven, Variable Delivery, General Specification for, dated 3 May 1972	Design Requirements:	
		o Environmental Conditions	Significant
		o Interchangeability	Insignificant
		o Workmanship	Significant
		o Safety	Significant
		o Reliability	Insignificant
		o Maintainability	Significant
		o Electromagnetic Interference	Significant
		o Human Engineering	Significant
		Qualification Testing:	
		o Qualification Retest	Significant
		o Maintainability Demonstration	Significant
		o Environmental Tests	Significant

Figure 26 - Continued.

GENERIC CLASSIFICATION	DOCUMENT NUMBER, TITLE, REVISION, AMENDMENT, SUPPLEMENT AND DATES	DEFICIENCY	POTENTIAL RELIABILITY/ MAINTAINABILITY IMPACT
Hydraulic Filters	MIL-F-5504B	Design Requirements:	
	Filters and Filter Elements, Fluid Pressure, Hydraulic Micronic Type, dated 17 October 1958	o Environmental Conditions	Significant
		o Safety	Significant
		o Maintainability	Significant
		o Human Engineering	Significant
	Amendment 2, dated 3 April 1969	Qualification Testing:	
		o Qualification Test Plan	Insignificant
		o Maintainability Demonstration	Significant
		o Environmental Tests	Significant
	MIL-F-8815C	Design Requirements:	
	Filter and Filter Elements, Fluid Pressure, Hydraulic Line, 15 Micron Absolute and 5 Micron Absolute, Type II Systems, General Specification for, dated 29 September 1972	o Reliability	Significant
		o Maintainability	Significant
		o Human Engineering	Significant
		Qualification Testing:	
		o Qualification Retest	Significant
	Supplement 1, dated 29 September 1972	o Reliability Demonstration	Significant
		o Maintainability Demonstration	Significant
		o Environmental Tests	Significant

Figure 26 - Continued.

GENERIC CLASSIFICATION	DOCUMENT NUMBER, TITLE, REVISION, AMENDMENT, SUPPLEMENT AND DATES	DEFICIENCY	POTENTIAL RELIABILITY/ MAINTAINABILITY IMPACT
	MIL-F-27656B (USAF) Filter Unit, Fluid, Pressure MXU - 408/M, Absolute 5 Micron, Hydraulic, dated 29 November 1968 Amendment 1, dated 6 May 1969	General: This document is not for aircraft or helicopter use.	Major
Relief Valve	MIL-V-5523C (USAF) Valve: Relief, Hydraulic Pressure, dated 3 February 1969 Amendment 1, dated 2 June 1971	Design Requirements:	
		o Reliability	Major
		o Maintainability	Significant
		o Human Engineering	Significant
		Qualification Testing:	
		o Reliability Demonstration	Significant
		o Maintainability Demonstration	Significant
		o Environmental Tests	Significant

Figure 26 - Continued.

GENERIC CLASSIFICATION	DOCUMENT NUMBER, TITLE, REVISION, AMENDMENT, SUPPLEMENT AND DATES	DEFICIENCY	POTENTIAL RELIABILITY/ MAINTAINABILITY IMPACT
	MIL-V-8813 (ASG)	Design Requirements:	
	Valves: Aircraft, Hydraulic Pressure Relief, Type II Systems, dated 20 November 1957	o Standard Components	Significant
		o Environmental Conditions	Significant
		o Interchangeability	Significant
		o Part Identification	Insignificant
		o Workmanship	Significant
		o Safety	Significant
		o Reliability	Significant
		o Maintainability	Significant
		o Human Engineering	Significant
		Qualification Testing:	
		o Qualification Test Plan	Insignificant
		o Qualification Retest	Significant
		o Reliability Demonstration	Significant
		o Maintainability Demonstration	Significant
		o Environmental Tests	Significant
		Quality Assurance Requirements and Provisions:	
		Quality Assurance Provisions	Significant

Figure 26 - Continued.

GENERIC CLASSIFICATION	DOCUMENT NUMBER, TITLE, REVISION, AMENDMENT, SUPPLEMENT AND DATES	DEFICIENCY	POTENTIAL RELIABILITY/ MAINTAINABILITY IMPACT
	MIL-V-5527A Valves; Aircraft, Hydraulic Thermal Expansion Relief, dated 14 May 1951	Design Requirements:	
		o Environmental Conditions	Significant
		o Safety	Significant
		o Reliability	Significant
		o Maintainability	Significant
		o Human Engineering	Significant
		Qualification Testing:	
		o Reliability Demonstration	Significant
		o Maintainability Demonstration	Significant
		o Environmental Tests	Significant
	MIL-V-5519C Valves, Aircraft Hydraulic Unloading, dated 8 June 1964 Amendment 1, dated 5 August 1964	Design Requirements:	
		o Standard Components	Significant
		o Environmental Conditions	Significant
		o Interchangeability	Insignificant
		o Workmanship	Significant
		o Safety	Significant
		o Reliability	Significant
		o Maintainability	Significant

Figure 26 - Continued.

GENERIC CLASSIFICATION	DOCUMENT NUMBER, TITLE, REVISION, AMENDMENT, SUPPLEMENT AND DATES	DEFICIENCY	POTENTIAL RELIABILITY/ MAINTAINABILITY IMPACT
		o Human Engineering	Significant
		Qualification Testing:	
		o Reliability Demonstration	Significant
		o Maintainability Demonstration	Significant
		o Environmental Tests	Significant
Hydraulic Pressure Reducers	No Military Specification was found to exist with the generic classification of hydraulic pressure reducers.	General: When military specifications do not exist for components such as hydraulic pressure reducers designed and manufactured for U.S. Army use, there is a possibility of inadequate reliability and maintainability requirements being imposed upon the design.	Major

Figure 26 - Continued.

GENERIC CLASSIFICATION	DOCUMENT NUMBER, TITLE, REVISION, AMENDMENT, SUPPLEMENT AND DATES	DEFICIENCY	POTENTIAL RELIABILITY/ MAINTAINABILITY IMPACT
Hydraulic Check Valves	MIL-V-19067A (ASG) Valves, Check, Controllable, Hydraulic, Aircraft, Type II Systems, dated 30 April 1957	General:	
		Design	Significant
		Design Requirements:	
		o Standard Components	Significant
		o Environmental Conditions	Significant
		o Product Identification	Significant
		o Workmanship	Significant
		o Safety	Significant
		o Reliability	Significant
		o Maintainability	Significant
		o Human Engineering	Significant
		Qualification Testing:	
		o Qualification Retest	Significant
		o Reliability Demonstration	Significant
		o Maintainability Demonstration	Significant
		o Environmental Tests	Significant
		Quality Assurance Requirements and Provisions:	
		Quality Assurance Provisions	Significant

Figure 26 - Continued.

GENERIC CLASSIFICATION	DOCUMENT NUMBER, TITLE, REVISION, AMENDMENT, SUPPLEMENT AND DATES	DEFICIENCY	POTENTIAL RELIABILITY/ MAINTAINABILITY IMPACT
	MIL-V-5528A	Design Requirements:	
	Valves, Hydraulic Controllable Check, dated 26 September 1951	o Environmental Conditions	Significant
		o Safety	Significant
		o Reliability	Significant
		o Maintainability	Significant
		o Human Engineering	Significant
		Qualification Testing:	
		o Reliability Demonstration	Significant
		o Maintainability Demonstration	Significant
		o Environmental Tests	Significant
		Quality Assurance Requirements and Provisions:	
		Quality Assurance Provisions	Significant
	MIL-V-19069A (ASG)	General:	
	Valves, Check, Hydraulic: Aircraft Type II Systems, dated 30 April 1957	Design	Significant
		Design Requirements:	
	Amendment 1, dated 21 September 1959	o Standard Components	Significant

Figure 26 - Continued.

GENERIC CLASSIFICATION	DOCUMENT NUMBER, TITLE, REVISION, AMENDMENT, SUPPLEMENT AND DATES	DEFICIENCY	POTENTIAL RELIABILITY/ MAINTAINABILITY IMPACT
		o Environmental Conditions	Significant
		o Interchangeability	Insignificant
		o Product Identification	Insignificant
		o Workmanship	Significant
		o Safety	Significant
		o Reliability	Significant
		o Maintainability	Significant
		o Human Engineering	Significant
		Qualification Testing:	
		o Qualification Sampling	Significant
		o Qualification Retest	Significant
		o Reliability Demonstration	Significant
		o Maintainability Demonstration	Significant
		o Environmental Tests	Significant

Figure 26 - Continued.

GENERIC CLASSIFICATION	DOCUMENT NUMBER, TITLE, REVISION, AMENDMENT, SUPPLEMENT AND DATES	DEFICIENCY	POTENTIAL RELIABILITY/ MAINTAINABILITY IMPACT
	MIL-V-5524B (ASG)	General:	
	Valves, Check, Hydraulic, Aircraft, Type I Systems, dated 4 June 1957	Design	Major
		Design Requirements:	
	Amendment 2, dated 21 September 1959	o Standard Components	Significant
		o Environmental Conditions	Significant
		o Interchangeability	Insignificant
		o Product Identification	Insignificant
		o Workmanship	Significant
		o Safety	Significant
		o Reliability	Significant
		o Maintainability	Significant
		o Human Engineering	Significant
		Qualification Testing:	
		o Qualification Test Plan	Insignificant
		o Qualification Sampling	Significant
		o Reliability Demonstration	Significant
		o Maintainability Demonstration	Significant
		o Environmental Tests	Significant

Figure 26 - Continued.

GENERIC CLASSIFICATION	DOCUMENT NUMBER, TITLE, REVISION, AMENDMENT, SUPPLEMENT AND DATES	DEFICIENCY	POTENTIAL RELIABILITY/ MAINTAINABILITY IMPACT
		Quality Assurance Requirements and Provisions:	
		Quality Assurance Provisions	Significant
	MIL-V-25675B	Design Requirements:	
	Valves, Check, Miniature, Hydraulic Aircraft and Missile, dated 13 May 1968	o Standard Components	Significant
		o Environmental Conditions	Significant
		o Interchangeability	Insignificant
	Amendment 4, dated 2 May 1972	o Safety	Significant
		o Reliability	Significant
		o Maintainability	Significant
		o Human Engineering	Significant
		Qualification Testing:	
		o Qualification Retest	Insignificant
		o Reliability Demonstration	Significant
		o Maintainability Demonstration	Significant
		o Environmental Tests	Significant
		Quality Assurance Requirements and Provisions:	
		Quality Assurance Provisions	Significant

Figure 26 - Continued.

GENERIC CLASSIFICATION	DOCUMENT NUMBER, TITLE, REVISION, AMENDMENT, SUPPLEMENT AND DATES	DEFICIENCY	POTENTIAL RELIABILITY/ MAINTAINABILITY IMPACT
Hydraulic Heat Exchangers	MIL-C-25478 (USAF) Coolers, Lubricating Oil, Aircraft Engine, Synthetic Oil, General Specification for, dated 5 October 1956 Amendment 1, dated 14 February 1957	General: The use of this document to manufacture heat exchangers for hydraulic systems is considered inadequate due to its incompatibility with hydraulic fluids and requirements.	Significant
	MIL-C-5637B Cooler, Lubricating Oil, Petroleum Base, Aircraft Engine, Tubular, dated	General: The use of this document to manufacture heat exchangers for hydraulic systems is considered inadequate due to its incompatibility with hydraulic fluids and requirements.	Significant

Figure 26 - Continued.

GENERIC CLASSIFICATION	DOCUMENT NUMBER, TITLE, REVISION, AMENDMENT, SUPPLEMENT AND DATES	DEFICIENCY	POTENTIAL RELIABILITY/ MAINTAINABILITY IMPACT
Hydraulic Hoses and Tubing	MIL-H-8794D Hose, Rubber, Hydraulic, Fuel and Oil Resistant, dated 4 February 1971	Design Requirements:	
		o Standard Components	Significant
		o Environmental Conditions	Significant
		o Safety	Significant
		o Reliability	Significant
		o Maintainability	Significant
		o Human Engineering	Insignificant
		Qualification Testing:	
		o Reliability Demonstration	Significant
		o Maintainability Demonstration	Significant
		o Environmental Tests	Significant
	MIL-H-8795B Hose Assemblies, Rubber, Hydraulic, Fuel and Oil Resistant, dated 21 March 1966 Amendment 1, dated 24 June 1968	Design Requirements:	
		o Standard Components	Signficant
		o Environmental Conditions	Significant
		o Interchangeability	Insignificant
		o Safety	Significant
		o Reliability	Significant
		o Maintainability	Significant

Figure 27. Hydraulic System Component Document Deficiency Analysis.

GENERIC CLASSIFICATION	DOCUMENT NUMBER, TITLE, REVISION, AMENDMENT, SUPPLEMENT AND DATES	DEFICIENCY	POTENTIAL RELIABILITY/ MAINTAINABILITY IMPACT
		o Human Engineering	Significant
		Qualification Testing:	
		o Qualification Sampling	Significant
		o Qualification Retest	Significant
		o Reliability Demonstration	Significant
		o Maintainability Demonstration	Significant
		o Environmental Tests	Significant
	MIL-H-8788B Hose, Hydraulic, High Pressure, dated 12 July 1968	Design Requirements:	
		o Standard Components	Significant
		o Environmental Conditions	Significant
		o Interchangeability	Insignificant
		o Safety	Significant
		o Reliability	Significant
		o Maintainability	Significant
		o Human Engineering	Significant
		Qualification Testing:	
		o Qualification Sampling	Significant
		o Reliability Demonstration	Significant

Figure 27 - Continued.

GENERIC CLASSIFICATION	DOCUMENT NUMBER, TITLE, REVISION, AMENDMENT, SUPPLEMENT AND DATES	DEFICIENCY	POTENTIAL RELIABILITY/ MAINTAINABILITY IMPACT
		o Maintainability Demonstration	Significant
		o Environmental Tests	Significant
	MIL-H-8790C	Design Requirements:	
	Hose Assemblies, Rubber, Hydraulic, High Pressure (3000 psi), dated 24 May 1966	o Standard Components	Significant
		o Environmental Conditions	Significant
		o Interchangeability	Insignificant
	Amendment 1, dated 24 June 1968	o Safety	Significant
		o Reliability	Significant
		o Maintainability	Significant
		o Human Engineering	Significant
		Qualification Testing:	
		o Qualification Test Plan	Insignificant
		o Qualification Sampling	Significant
		o Qualification Retest	Significant
		o Reliability Demonstration	Significant
		o Maintainability Demonstration	Significant
		o Environmental Tests	Significant

Figure 27 - Continued.

GENERIC CLASSIFICATION	DOCUMENT NUMBER, TITLE, REVISION, AMENDMENT, SUPPLEMENT AND DATES	DEFICIENCY	POTENTIAL RELIABILITY/ MAINTAINABILITY IMPACT
	MIL-H-27267A Hose, Tetrafluoroethylene, High Temperature, Medium Pressure, dated 13 July 1965 Amendment 3, dated 11 June 1971	Design Requirements:	
		o Interchangeability	Insignificant
		o Safety	Signficant
		o Reliability	Significant
		o Maintainability	Significant
		o Human Engineering	Significant
		Qualification Testing:	
		o Reliability Demonstration	Significant
		o Maintainability Demonstration	Significant
		o Environmental Tests	Significant
	MIL-H-25579C Hose Assembly, Tetrafluoroethylene, High Temperature, Medium Pressure, dated 20 February 1967 Amendment 1, dated 16 August 1971	Design Requirements:	
		o Safety	Significant
		o Reliability	Significant
		o Maintainability	Significant
		o Human Engineering	Significant
		Qualification Testing:	
		o Reliability Demonstration	Significant

Figure 27 - Continued.

GENERIC CLASSIFICATION	DOCUMENT NUMBER, TITLE, REVISION, AMENDMENT, SUPPLEMENT AND DATES	DEFICIENCY	POTENTIAL RELIABILITY/ MAINTAINABILITY IMPACT
		o Maintainability Demonstration	Significant
		o Environmental Tests	Significant
	MIL-H-38360A	Design Requirements:	
	Hose Assembly, Tetrafluoroethylene, High Temperature, High Pressure, Hydraulic and Pneumatic, dated 7 December 1966	o Safety	Significant
		o Reliability	Significant
		o Maintainability	Significant
		o Human Engineering	Significant
	Amendment 1, dated 21 November 1967	Qualification Testing:	
		o Reliability Demonstration	Significant
		o Maintainability Demonstration	Significant
		o Environmental Tests	Significant

Figure 27 - Continued.

GENERIC CLASSIFICATION	DOCUMENT NUMBER, TITLE, REVISION, AMENDMENT, SUPPLEMENT AND DATES	DEFICIENCY	POTENTIAL RELIABILITY/ MAINTAINABILITY IMPACT
	MIL-T-7081D (ASG) Tube, Aluminum Alloy, Seamless, Round, Drawn 6061, Aircraft Hydraulic Quality, dated 2 November 1965 Amendment 4, dated 23 June 1971	Design Requirements:	
		o Environmental Conditions	Significant
		o Interchangeability	Significant
		o Safety	Significant
		o Reliability	Significant
		o Human Engineering	Significant
		Qualification Testing:	
		o Qualification Retest	Significant
		o Reliability Demonstration	Significant
		o Environmental Tests	Significant
	MIL-T-6845C Tubing, Steel, Corrosion-Resistant (304), Aerospace Vehicle Hydraulic System, 1/8 Hard Condition, dated 21 September 1966 Amendment 2, dated 16 October 1970	Design Requirements:	
		o Environmental Conditions	Significant
		o Safety	Significant
		o Reliability	Significant
		o Human Engineering	Significant
		Qualification Testing:	
		o Qualification Test Plan	Insignificant
		o Qualification Retest	Significant

Figure 27 - Continued.

GENERIC CLASSIFICATION	DOCUMENT NUMBER, TITLE, REVISION, AMENDMENT, SUPPLEMENT AND DATES	DEFICIENCY	POTENTIAL RELIABILITY/ MAINTAINABILITY IMPACT
		o Reliability Demonstration	Significant
		o Maintainability Demonstration	Significant
		o Environmental Tests	Significant
	MIL-T-8504A Tubing, Steel, Corrosion-Resistant (304), Aerospace Vehicle Hydraulic Systems, Annealed, Seamless and Welded, dated 22 September 1966 Amendment 2, dated 14 April 1971	Design Requirements:	
		o Environmental Conditions	Significant
		o Safety	Significant
		o Reliability	Significant
		o Human Engineering	Significant
		Qualification Testing:	
		o Qualification Test Plan	Insignificant
		o Qualification Retest	Significant
		o Reliability Demonstration	Significant
		o Environmental Tests	Significant

Figure 27 - Continued.

GENERIC CLASSIFICATION	DOCUMENT NUMBER, TITLE, REVISION, AMENDMENT, SUPPLEMENT AND DATES	DEFICIENCY	POTENTIAL RELIABILITY/ MAINTAINABILITY IMPACT
	MIL-T-8808A (ASG) Tubing, Steel, Corrosion-Resistant (18-8 Stabilized), Aircraft Hydraulic Quality, dated 1 April 1958 Amendment 1, dated 28 July 1969	Design Requirements:	
		o Environmental Conditions	Significant
		o Interchangeability	Insignificant
		o Reliability	Significant
		o Safety	Significant
		o Human Engineering	Significant
		Qualification Testing:	
		o Qualification Test Plan	Significant
		o Qualification Retest	Significant
		o Reliability Demonstration	Significant
		o Environmental Tests	Significant
Marking/ Identification Tape	MIL-T-9906A Tape, Aircraft Tubing Identification Marker (Non-Corrosive, Heat, Cold and Solvent Resistant), dated 8 April 1964 Amendment 1, dated 2 March 1970	General: No meaningful analysis could be conducted on this class of documents with respect to reliability and maintainability of hydraulic systems. However, marking tape should be compatible with hydraulic fluids used within the hydraulic system.	Insignificant

Figure 27 - Continued.

GENERIC CLASSIFICATION	DOCUMENT NUMBER, TITLE, REVISION, AMENDMENT, SUPPLEMENT AND DATES	DEFICIENCY	POTENTIAL RELIABILITY/ MAINTAINABILITY IMPACT
	MIL-STD-1247B Military Standard Markings, Functions and Hazard Designations of Hose, Pipe, and Tube Lines for Aircraft, Missile, and Space Systems, dated 20 December 1968	General: No meaningful analysis could be conducted on this class of documents with respect to reliability and maintainability of hydraulic systems. However, marking tape should be compatible with hydraulic fluids used within the hydraulic system.	Insignificant
Pneumatic Components	MIL-R-8572A (Aer) Reducers, Pneumatic Pressure, Aircraft, dated 5 October 1954	Design Requirements:	
		o Product Identification	Insignificant
		o Workmanship	Significant
		o Safety	Significant
		o Reliability	Significant
		o Maintainability	Significant
		o Human Engineering	Significant

Figure 27 - Continued.

GENERIC CLASSIFICATION	DOCUMENT NUMBER, TITLE, REVISION, AMENDMENT, SUPPLEMENT AND DATES	DEFICIENCY	POTENTIAL RELIABILITY/ MAINTAINABILITY IMPACT
		Qualification Testing:	
		o Qualification Test Plan	Significant
		o Qualification Retest	Significant
		o Reliability Demonstration	Significant
	MIL-V-6164C Valves; Aircraft, Air, High-Pressure, dated 2 June 1970	Design Requirements:	
		o Standard Components	Significant
		o Environmental Conditions	Significant
		o Safety	Significant
		o Reliability	Significant
		o Maintainability	Significant
		o Human Engineering	Significant
		Qualification Testing:	
		o Qualification Test Plan	Significant
		o Qualification Sampling	Significant
		o Qualification Retest	Significant

Figure 27 - Continued.

GENERIC CLASSIFICATION	DOCUMENT NUMBER, TITLE, REVISION, AMENDMENT, SUPPLEMENT AND DATES	DEFICIENCY	POTENTIAL RELIABILITY/ MAINTAINABILITY IMPACT
		o Reliability Demonstration	Significant
		o Maintainability Demonstration	Significant
		o Environmental Tests	Significant
Hydraulic Pressure Indicators	MIL-G-23337 (WEP) Gages, Pressure, Dialed Indicating, dated 15 July 1962 Amendment 3, dated 15 May 1965	Design Requirements:	
		o Standard Components	Significant
		o Environmental Conditions	Significant
		o Safety	Significant
		o Reliability	Significant
		o Maintainability	Significant
		o Human Engineering	Significant
		Qualification Testing:	
		o Qualification Sampling	Significant
		o Qualification Retest	Significant
		o Reliability Demonstration	Significant
		o Maintainability Demonstration	Significant
		o Environmental Tests	Significant

Figure 27 - Continued.

GENERIC CLASSIFICATION	DOCUMENT NUMBER, TITLE, REVISION, AMENDMENT, SUPPLEMENT AND DATES	DEFICIENCY	POTENTIAL RELIABILITY/ MAINTAINABILITY IMPACT
Scraper Rings	MIL-S-5049B Scrapers, Piston Rod, dated 3 July 1963 Amendment 2, dated 21 December 1966	Design Requirements:	
		o Environmental Conditions	Major
		o Interchangeability	Significant
		o Safety	Significant
		o Reliability	Significant
		o Maintainability	Significant
		o Human Engineering	Significant
		Qualification Testing:	
		o Reliability Demonstration	Significant
		o Maintainability Demonstration	Significant
		o Environmental Tests	Significant
Hydraulic Packing Backup Rings	MIL-R-8791C Retainer, Packing, Hydraulic and Pneumatic, Tetrafluoroethylene Resin, dated 29 June 1964 Amendment 1, dated 31 March 1971	Design Requirements:	
		o Environmental Conditions	Major
		o Safety	Significant
		o Reliability	Significant
		o Maintainability	Significant
		o Human Engineering	Significant

Figure 27 - Continued.

GENERIC CLASSIFICATION	DOCUMENT NUMBER, TITLE, REVISION, AMENDMENT, SUPPLEMENT AND DATES	DEFICIENCY	POTENTIAL RELIABILITY/ MAINTAINABILITY IMPACT
		Qualification Testing:	
		o Qualification Retest	Significant
		o Reliability Demonstration	Significant
		o Maintainability Demonstration	Significant
		o Environmental Tests	Significant
Hydraulic Packings	MIL-G-5514F Gland Design; Packings, Hydraulic, General Requirements for, dated 15 January 1969	Design Requirements:	
		o Environmental Conditions	Major
		o Safety	Significant
		o Reliability	Significant
		o Maintainability	Significant
		o Human Engineering	Significant
		Qualification Testing:	
		Qualification Test Plan	Major

Figure 27 - Continued.

GENERIC CLASSIFICATION	DOCUMENT NUMBER, TITLE, REVISION, AMENDMENT, SUPPLEMENT AND DATES	DEFICIENCY	POTENTIAL RELIABILITY/ MAINTAINABILITY IMPACT
	MIL-P-5516C Packing, Preformed, Petroleum Hydraulic Fluid Resistant, 160°F, dated 5 January 1967 Amendment 2, dated 29 March 1971	Design Requirements:	
		o Environmental Conditions	Major
		o Interchangeability	Insignificant
		o Safety	Significant
		o Reliability	Significant
		o Maintainability	Significant
		o Human Engineering	Significant
		Qualification Testing:	
		o Reliability Demonstration	Significant
		o Maintainability Demonstration	Significant
		o Environmental Tests	Significant
	MIL-P-25732B Packing, Preformed, Petroleum Hydraulic Fluid Resistant, 275°F, dated 11 January 1967	Design Requirements:	
		o Environmental Conditions	Major
		o Interchangeability	Insignificant
		o Safety	Significant
		o Reliability	Significant
		o Maintainability	Significant
		o Human Engineering	Significant

Figure 27 - Continued.

GENERIC CLASSIFICATION	DOCUMENT NUMBER, TITLE, REVISION, AMENDMENT, SUPPLEMENT AND DATES	DEFICIENCY	POTENTIAL RELIABILITY/ MAINTAINABILITY IMPACT
		Qualification Testing:	
		o Environmental Tests	Significant
		o Reliability Demonstration	Significant
		o Maintainability Demonstration	Significant
	MIL-P-5315B Packing, Preformed, Hydrocarbon Fuel Resistant, dated 2 December 1964 Amendment 1, dated 18 November 1966	General: This document does not pertain to hydraulic systems.	Significant
	MIL-P-5510B Packing, Preformed, Straight Thread Tube Fitting Boss, dated 10 October 1962 Amendment 2, dated 18 June 1971	Design Requirements:	
		o Environmental Conditions	Significant
		o Safety	Significant
		o Reliability	Significant
		o Maintainability	Significant
		o Human Engineering	Significant

Figure 27 - Continued.

GENERIC CLASSIFICATION	DOCUMENT NUMBER, TITLE, REVISION, AMENDMENT, SUPPLEMENT AND DATES	DEFICIENCY	POTENTIAL RELIABILITY/ MAINTAINABILITY IMPACT
		Qualification Testing:	
		o Reliability Demonstration	Significant
		o Maintainability Demonstration	Significant
		o Environmental Tests	Significant
Bearings	MIL-B-1083C Balls, Bearing, Ferrous and Non-Ferrous (For use in Bearings and Valves), dated 3 March 1964	Design Requirements:	
		o Environmental Conditions	Significant
		o Interchangeability	Significant
		o Workmanship	Significant
		o Reliability	Significant
		Qualification Testing:	
		o Environmental Tests	Significant
		o Qualification Retest	Significant
		o Reliability Demonstration	Significant

Figure 27 - Continued.

GENERIC CLASSIFICATION	DOCUMENT NUMBER, TITLE, REVISION, AMENDMENT, SUPPLEMENT AND DATES	DEFICIENCY	POTENTIAL RELIABILITY/ MAINTAINABILITY IMPACT
	MIL-B-5687C	Design Requirements:	
	Bearings, Sleeves; Washers, Thrust, Sintered, Metal Powder, Oil-Impregnated, dated 12 June 1962	o Environmental Conditions	Significant
		o Interchangeability	Significant
		o Safety	Significant
		o Reliability	Significant
		o Maintainability	Significant
		o Human Engineering	Significant
		Qualification Testing:	
		o Environmental Tests	Significant
		o Qualification Sampling	Significant
		o Qualification Retest	Significant
		o Reliability Demonstration	Significant
		o Maintainability Demonstration	Significant
	MIL-B-6039C	Design Requirements:	
	Bearing, Double Row, Ball, Sealed Rod End, Anti-Friction, Self-Aligning, dated 7 July 1971	o Environmental Conditions	Significant
		o Interchangeability	Significant
		o Reliability	Significant
		o Maintainability	Significant

Figure 27 - Continued.

GENERIC CLASSIFICATION	DOCUMENT NUMBER, TITLE, REVISION, AMENDMENT, SUPPLEMENT AND DATES	DEFICIENCY	POTENTIAL RELIABILITY/ MAINTAINABILITY IMPACT
		o Human Engineering	Significant
		Qualification Testing:	
		o Environmental Tests	Significant
		o Qualification Retest	Significant
		o Reliability Demonstration	Significant
		o Maintainability Demonstration	Significant
	MIL-B-7949D Bearings, Ball, Airframe, Antifriction, dated 8 December 1971 Supplement 1A, dated 8 December 1971	Design Requirements:	
		o Environmental Conditions	Significant
		o Safety	Significant
		o Reliability	Significant
		o Maintainability	Significant
		o Human Engineering	Significant
		Qualification Testing:	
		o Environmental Tests	Significant
		o Qualification Retest	Significant
		o Reliability Demonstration	Significant
		o Maintainability Demonstration	Significant

Figure 27 - Continued.

GENERIC CLASSIFICATION	DOCUMENT NUMBER, TITLE, REVISION, AMENDMENT, SUPPLEMENT AND DATES	DEFICIENCY	POTENTIAL RELIABILITY/ MAINTAINABILITY IMPACT
	MIL-B-8942A (ASG) Bearings, Plain, TFE Lined, Self-Aligning, dated 15 November 1965 Amendment 1, dated 14 August 1967	Design Requirements:	
		o Environmental Conditions	Significant
		o Safety	Significant
		o Reliability	Significant
		o Maintainability	Significant
		o Human Engineering	
		Qualification Testing:	
		o Environmental Tests	Significant
		o Qualification Retest	Significant
		o Reliability Demonstration	Significant
		o Maintainability Demonstration	Significant
Inserts	MIL-I-45914 Insert, Screw Thread - Locked In, Key Locked, dated 1 December 1967 Amendment 1, dated 25 November 1970	Design Requirements:	
		Interchangeability	Significant

Figure 27 - Continued.

GENERIC CLASSIFICATION	DOCUMENT NUMBER, TITLE, REVISION, AMENDMENT, SUPPLEMENT AND DATES	DEFICIENCY	POTENTIAL RELIABILITY/ MAINTAINABILITY IMPACT
	MIL-I-8846A Inserts, Screw-Thread, Helical Coil, dated 6 November 1969	Design Requirements: Maintainability	 Significant
Hydraulic Fittings	MIL-A-5070D Adapter, Hose to Tube, Pipe and Flange, Reusable; Hydraulic, Fuel and Oil Lines, dated 11 September 1970 Supplement 1, dated 11 September 1970	Design Requirements: o Environmental Conditions o Reliability o Maintainability o Human Engineering Qualification Testing: o Environmental Tests o Qualification Retest o Reliability Demonstration o Maintainability Demonstration	 Significant Significant Significant Significant Significant Significant Significant Significant
	MIL-F-3541B Fittings, Lubrication, dated 16 July 1965	Design Requirements: Environmental Conditions	 Significant

Figure 27 - Continued.

GENERIC CLASSIFICATION	DOCUMENT NUMBER, TITLE, REVISION, AMENDMENT, SUPPLEMENT AND DATES	DEFICIENCY	POTENTIAL RELIABILITY/ MAINTAINABILITY IMPACT
	MIL-F-5509B	Design Requirements:	
	Fittings, Flared Tube, Fluid Connection, dated 22 January 1963	o Environmental Conditions	Significant
		o Reliability	Significant
	Supplement 1, dated 22 January 1963	o Maintainability	Significant
		Qualification Testing:	
		o Environmental Tests	Significant
		o Qualification Sampling	Significant
		o Qualification Retest	Significant
		o Reliability Demonstration	Significant
		o Maintainability Demonstration	Significant
	MIL-F-18280C	Design Requirements:	
	Fittings, Flareless Tube, Fluid Connection, dated 27 June 1969	o Environmental Conditions	Significant
		o Interchangeability	Significant
	Supplement 1A, dated 27 June 1969	o Reliability	Significant
		o Maintainability	Significant
	Amendment 1, dated 23 April 1971	o Human Engineering	Significant

Figure 27 - Continued.

GENERIC CLASSIFICATION	DOCUMENT NUMBER, TITLE, REVISION, AMENDMENT, SUPPLEMENT AND DATES	DEFICIENCY	POTENTIAL RELIABILITY/ MAINTAINABILITY IMPACT
	MIL-F-27272A	Design Requirements:	
	Fittings, Tetrafluoroethylene Hose, High Temperature, Medium Pressure, General Requirements for, dated 2 May 1966	o Reliability	Significant
		o Maintainability	Significant
		o Human Engineering	Significant
		Qualification Testing:	
	Amendment 1, dated 6 March 1969	o Environmental Tests	Significant
		o Reliability Demonstration	Significant
	Supplement 1A, dated 30 June 1972	o Maintainability Demonstration	Significant
	MIL-J-5513B	Design Requirements:	
	Joints, Hydraulic Swivel, dated 13 May 1971	o Environmental Conditions	Significant
		o Interchangeability	Significant
		o Safety	Significant
		o Maintainability	Significant
		o Human Engineering	Significant
		Qualification Testing:	
		o Environmental Tests	Significant
		o Qualification Sampling	Significant

Figure 27 - Continued.

GENERIC CLASSIFICATION	DOCUMENT NUMBER, TITLE, REVISION, AMENDMENT, SUPPLEMENT AND DATES	DEFICIENCY	POTENTIAL RELIABILITY/ MAINTAINABILITY IMPACT
		o Qualification Retest	Significant
		o Reliability Demonstration	Significant
		o Maintainability Demonstration	Significant

Figure 27 - Continued.