AD-771 955

HELICOPTER GROSS WEIGHT AND CENTER OF GRAVITY MEASUREMENT SYSTEM

Richard L. Dybvad

Electro Development Corporation

Prepared for:

Army Air Mobility Research and Development Laboratory

August 1973

DISTRIBUTED BY:

NTIS

National Technical Information Service
U. S. DEPARTMENT OF COMMERCE
5285 Port Royal Road, Springfield Va. 22151

DISCLAIMERS

The findings in this report are not to be construed as an official Department of the Army position unless so designated by other authorized documents.

When Government drawings, specifications, or other data are used for any purpose other than in connection with a definitely related Government procurement operation, the United States Government thereby incurs no responsibility nor any obligation whatsoever; and the fact that the Government may have formulated, furnished, or in any way supplied the said drawings, specifications, or other data is not to be regarded by implication or otherwise as in any manner licensing the holder or any other person or corporation, or conveying any rights or permission, to manufacture, use, or sell any patented invention that may in any way be related thereto.

Trade names cited in this report do not constitute an official endorsement or approval of the use of such commercial hardware or software.

DISPOSITION INSTRUCTIONS

Destroy this report when no longer needed. Do not return it to the originator.

Section
Section
AVAILABILITY CODES
SPECIAL
A

Unclassified
Security Classification

AD-771955

DOCUMENT CONTROL DATA - R & D

(Security classification of title, body of abstract and indexing annotation must be entered when the overall report is classified)

1. ORIGINATING ACTIVITY (Corporate author)
Electro Development Corporation
Lynnwood, Washington

2a. REPORT SECURITY CLASSIFICATION
Unclassified

2b. GROUP

3. REPORT TITLE
HELICOPTER GROSS WEIGHT AND CENTER OF GRAVITY MEASUREMENT SYSTEM

4. DESCRIPTIVE NOTES (Type of report and inclusive dates)
Final Report

5. AUTHOR(S) (First name, middle initial, last name)
Richard L. Dybvad

6. REPORT DATE
August 1973

7a. TOTAL NO. OF PAGES
~~73~~ 76

7b. NO. OF REFS

8a. CONTRACT OR GRANT NO.
DAAJ02-71-C-0029 and DAAJ02-72-C-0053

b. PROJECT NO.

c. Tasks 1F162205A52902 and 1F162205A11906

d.

9a. ORIGINATOR'S REPORT NUMBER(S)
USAAMRDL Technical Report 73-66

9b. OTHER REPORT NO(S) (Any other numbers that may be assigned this report)

10. DISTRIBUTION STATEMENT
Approved for public release; distribution unlimited.

Pages of illustrations in this document may be better studied on microfiche.

11. SUPPLEMENTARY NOTES

12. SPONSORING MILITARY ACTIVITY
Eustis Directorate
U.S. Army Air Mobility R&D Laboratory
Fort Eustis, Virginia

13. ABSTRACT

The design of an on board gross weight and center of gravity measurement system applicable to the CH 47 and UH-1 helicopters was developed, and a prototype CH 47 system was evaluated in the laboratory. Gross weight accuracies of ± 1.6% of maximum design weight were achieved in a laboratory simulation of the environment.

A flightworthy prototype was subsequently fabricated and evaluated in flight tests on a CH 47 helicopter at the U. S. Army Aviation Systems Test Activity, Edwards AFB, California. The results show accuracies of ± 1% full scale with the helicopter in a rotors static condition. With rotors in motion, however, errors up to 5000 lb occurred in the gross weight due to the inaccuracy of the rotor lift measurement.

It is concluded that the method of measuring rotor lift via rotor structural stresses is viable, but further investigation is required into the nature of the thermal stresses and dynamic forces induced by hot lubricants and pitch actuator cylinder.

Reproduced by
NATIONAL TECHNICAL
INFORMATION SERVICE
U S Department of Commerce
Springfield VA 22151

DD FORM 1 NOV 65 1473 REPLACES DD FORM 1473, 1 JAN 64, WHICH IS OBSOLETE FOR ARMY USE.

Unclassified
Security Classification

Unclassified

Security Classification

14. KEY WORDS	LINK A ROLE	LINK A WT	LINK B ROLE	LINK B WT	LINK C ROLE	LINK C WT
Helicopter Weight and Balance						
Lift Margin Indicator						
Rotor Lift Measurement						
Gross Weight and Center of Gravity Measurement, Rotary-Wing						

Unclassified

Security Classification

9053-73

DEPARTMENT OF THE ARMY
U. S. ARMY AIR MOBILITY RESEARCH & DEVELOPMENT LABORATORY
EUSTIS DIRECTORATE
FORT EUSTIS, VIRGINIA 23604

This report was prepared by Electro Development Corporation (EDC) under the terms of contract DAAJ02-72-C-0053. The results of a previous effort conducted under the terms of contract DAAJ02-71-C-0029 are also reported herein since the work performed under that contract formed the basis for continuing the program in FY72.

U.S. Army military operations in Southeast Asia pointed up the need for a device that would provide instantaneous, reliable, and repeatable aircraft gross weight and center of gravity information to crews of cargo- and troop-carrying helicopters operating under adverse field conditions. Systems tested during the late 1960's had proven to be relatively successful under static (rotors not turning) conditions, but they were totally unacceptable in the dynamic (rotors turning) mode of operation.

The efforts conducted by EDC involved the design of systems applicable to the UH-1 and CH-47 helicopters; fabrication and laboratory testing of a system designed for the CH-47; and fabrication, installation, and flight evaluation of a total system aboard a Government-furnished CH-47B helicopter at the U.S. Army Aviation Systems Test Activity, Edwards Air Force Base, California.

Laboratory results were encouraging, and the flight test system performed acceptably in the static mode and when measuring external cargo hook loads. However, the inability of the system to accurately measure rotor lift forces resulted in inaccurate, unrepeatable, and unsatisfactory operation in the dynamic mode.

The conclusions and recommendation contained in this report are concurred in by the Eustis Directorate. At such time as resources become available, an effort will be made to resolve the problems associated with the measurement of rotor lift forces during dynamic operation.

The technical monitor for the program was Mr. William J. Nolan of the Safety and Survivability technical area, Military Operations Technology Division, Eustis Directorate.

Tasks 1F162205A52902/1F162205A11906
Contracts DAAJ02-71-C-0029 & DAAJ02-72-C-0053
USAAMRDL Technical Report 73-66
August 1973

HELICOPTER GROSS WEIGHT AND CENTER OF GRAVITY MEASUREMENT SYSTEM

Final Report

By

Richard L. Dybvad

Prepared by

Electro Development Corporation
Lynnwood, Washington

for

EUSTIS DIRECTORATE
U. S. ARMY AIR MOBILITY RESEARCH AND DEVELOPMENT LABORATORY
FORT EUSTIS, VIRGINIA

Approved for public release;
distribution unlimited.

ABSTRACT

The design of an on-board gross weight and center of gravity measurement system applicable to the CH-47 and UH-1 helicopters was developed, and a prototype CH-47 system was evaluated in the laboratory. Gross weight accuracies of ±1.6% of maximum design weight were achieved in a laboratory simulation of the environment.

A flightworthy prototype was subsequently fabricated and evaluated in flight tests on a CH-47B helicopter at the U. S. Army Aviation Systems Test Activity, Edwards AFB, California. The results show accuracies of ±1% full scale with the helicopter in a rotors-static condition. With rotors-in-motion, however, errors up to 5000 lb. occurred in the gross weight due to the inaccuracy of the rotor lift measurement.

It is concluded that the method of measuring rotor lift via rotor structural stresses is viable, but further investigation is required into the nature of the thermal stresses and dynamic forces induced by hot lubricants and pitch actuator cylinders.

TABLE OF CONTENTS

	Page
ABSTRACT	iii
LIST OF ILLUSTRATIONS	vii
LIST OF TABLES	ix
INTRODUCTION TO AIRCRAFT WEIGHT AND BALANCE SYSTEMS	1
HELICOPTER WEIGHT AND BALANCE SYSTEMS	4
THE REQUIREMENT FOR A HELICOPTER WBS	4
DESIGN ANALYSIS	4
Aft Gear	5
Forward Gear	9
Forward Rotor	9
Aft Rotor	9
THE ROTOR LIFT TRANSDUCER	10
SUMMARY OF SYSTEM DESIGN	11
SYSTEM DESIGN CHARACTERISTICS	12
EFFECT OF TEMPERATURE	14
ENVIRONMENTAL CHARACTERISTICS	14
INSTALLATION	14
LABORATORY TESTS	16
FORWARD ROTOR	16
AFT ROTOR	17
AFT LANDING GEAR	20
FORWARD LANDING GEAR	23
DATA ANALYSIS	23
FLIGHT TEST EVALUATION	29
TEST PLAN	29
SYSTEM INSTALLATION	31
CALIBRATION	31
TEST RESULTS	32
SUMMARY	41

Preceding page blank

TABLE OF CONTENTS (cont.)

	Page
CONCLUSION	52
RECOMMENDATION	53
APPENDIXES	
I - ANALYSIS OF AFT GEAR REACTIONS	54
II - DRAWING LIST CH-47	58
III - DEFINITION OF OPERATING RANGE OF WEIGHTS ON CH-47 LANDING GEARS	60
IV - DERIVATION OF EQUATIONS FOR LABORATORY DATA ANALYSIS	61
V - ANALYSIS OF THE EFFECT OF INDIVIDUAL LANDING GEAR REACTION AND ROTOR LIFT ERRORS ON INDICATED CENTER OF GRAVITY	62
VI - DRAWING LIST, UH-1	64
DISTRIBUTION	65

LIST OF ILLUSTRATIONS

Figure		Page
1	CH-47 Weight and Balance Equations	7
2	CH-47 Landing Gear Gravitational Forces and Reactions	8
3	Forward Rotor Transmission	13
4	Forward Rotor Transducer Performance in the Laboratory	18
5	Forward Rotor Test Fixture	19
6	Aft Landing Gear Test Fixture	21
7	Aft Landing Gear Laboratory Data	22
8	Forward Landing Gear Test Fixture	24
9	Effects of Wind Upon Gross Weight and Center of Gravity	27
10	Forward Landing Gear Laboratory Data	28
11	Gross Weight Static Accuracy With Pitch Attitude	35
12	Center of Gravity Static Accuracy With Pitch Attitude	37
13	Gross Weight Static Accuracy With Roll Attitude	38
14	Center of Gravity Static Accuracy With Roll Attitude	39
15	Rotor Sensors. Static Accuracy	40
16	Indicated Forward Rotor Weight Vs Forward Transmission Cover Temperature	42

LIST OF ILLUSTRATIONS (cont.)

Figure		Page
17	Indicated Aft Rotor Weight Vs Aft Transmission Cover Temperature	43
18	Variation in Gross Weight and CG With Temperature	49
19	Effects of Lateral Control Displacement on Indicated Gross Weight and Center of Gravity	50
20	Effects of Longitudinal Control Displacement on Indicated Gross Weight and Center of Gravity	51

LIST OF TABLES

Table		Page
I	Prototype System Accuracy in Laboratory	26
II	Static Accuracy, Level Terrain	33
III	Dynamic Accuracy, Helicopter on the Ground With Rotor at 230 RPM and Standard Pitch Settings	45
IV	Dynamic Accuracy, Unlevel Terrain, 230 RPM, Standard Pitch Settings	46
V	Hook Load Accuracy	47
VI	Flight Mode Accuracy	48

INTRODUCTION TO AIRCRAFT WEIGHT AND BALANCE SYSTEMS

While the evolution of structural and powerplant design has resulted in potentially higher aircraft performance, the achievement of optimum performance and safety of flight on a routine daily basis continues to depend upon a knowledge of gross weight and center of gravity. Methods for determining gross weight and center of gravity vary from manifests carefully calculated at metropolitan airports to hurried appraisals of aircraft cargo under battlefield conditions. The risks inherent in the latter procedure are obvious, while the mistakes which crop up in even the most rigorously monitored procedures (e.g., mislabled packing crates, miscounts, simple errors in calculation) pose equally dangerous consequences.

The effort to design an on-board weight and balance system (WBS) is not new. Early weight systems used strain gages bonded directly to aircraft structure; in fact, most airframe manufacturers continue to use this method for structural load survey purposes in flight test operations. Later systems use pressure transducers to measure the oleo strut pressure as a function of load and to provide accurate weight readings if the aircraft is taxied to "unstick" the oleo strut.

A further step in the evolution was made by the introduction of strain gage based transducers which are attached to the aircraft structure using ordinary hardware. Strain gage transducers are not limited in their operation by the "striction" (a commonly used abbreviation of the term static friction) problem, and no taxi is required to dither the oleo prior to taking a reading. Outstanding resolution is exhibited by these recent systems - - the boarding of even a single person aboard the 800,000-pound Lockheed C-5A Galaxy is readily apparent on the gross weight indicator. The drawback to the strain gage system for retrofit purposes is that provisions must be made during the design of the landing gear for the weight measurement transducers. Most recent transport-class commercial aircraft consequently provide for the installation of a WBS.

The readout portion of weight and balance systems has also undergone major changes. Early weight and balance systems measured the total weight borne by the landing gears, or perhaps had the capability to measure and indicate the individual gear loads in the case of multiple landing gears. The resultant center of gravity had to be calculated manually, however, based upon the individual gear weights and a knowledge of the ship's geometry. With the advent of electronic integrated circuits, the readout device has evolved into a sophisticated miniature computer calculating and displaying the gross weight and center of gravity instantaneously upon demand.

Basically, an on-board weight and balance system is comprised of transducer elements which measure strut pressure, landing gear deflection, or structural strain as a result of the gravitational weight of the aircraft. If the aircraft has several landing gears, the weight borne by each must be measured.

The transducer signals are delivered to a computer located in the cockpit. The computer transforms the transducer electrical signals to units of pounds, and displays any individual gear weight or the sum of all (i.e., the gross weight) on demand.

The computer also uses the individual gear weights, and certain constants related to the ship's physical dimensions, to calculate and display the center of gravity location. The equations used by the computer to calculate gross weight and center of gravity are derived in Figure 1 for a twin-rotor helicopter.

A third major element in most weight and balance systems is an attitude sensor, which corrects for the apparent change in center of gravity caused by an inclined slope.

The most critical WBS design problems are associated with the transducer and the transducer/aircraft interface. In the case of the oleo strut pressure method, for example, the major contributor to system errors is "stiction." In strain gage based transducers, the primary problem is the mechanical fastening of a transducer which is designed to sense displacements in

the order of 10^{-6} inches. Shifting of the transducer in its seat by even the smallest amount obviously cannot be tolerated.

More subtle design hurdles are the effects of wind, runway slope, uneven runway, brakes, and unequal tire pressures in causing nonvertical loads to be reacted by the landing gear.

The usual aircraft environmental problems of temperature, moisture, vibration, and electromagnetic interference must also be considered in the design.

Weight and balance systems of various designs are in service on the Boeing 747 and the latest wide-body trijets, the Lockheed L-1011 Tri Star and the Douglas DC-10. To date, prototype weight and balance systems have been used on helicopters on an experimental basis only.

HELICOPTER WEIGHT AND BALANCE SYSTEMS

THE REQUIREMENT FOR A HELICOPTER WBS

The requirement for an on-board weight and balance system on tactical helicopters is intensified by unique conditions which prevail in the combat environment. Consider, for example, the loading of troops and equipment in a jungle clearing. The rotors are turning and exerting an appreciable lift. A system which measures load on the landing gear only will be showing a significant error in the gross weight at this point. The tendency will be to get everything and everyone aboard even if it appears to stretch or exceed the maximum operating load. At takeoff, while in the ground effect mode (approximately one to two rotor diameters above the ground), lift may be adequate to pull the aircraft up with an excess payload. As the aircraft moves out of ground effect, however, an overgross condition becomes apparent and a forced landing on unimproved terrain results.

DESIGN ANALYSIS

With a requirement of WBS established, consider the basic system design criteria which apply to the CH-47 helicopter, shown in Figure 1, which has two forward and two aft landing gears and two rotors. From the figure, it is apparent that rotor lift must be measured or accounted for in order to determine the gross weight with the rotors in motion.

The system design for the CH-47 can be broken down into several discrete and specific problems. Concentrating on the load measurement sensors, since the computer and attitude sensors pose no difficulties, the problem becomes one of analyzing separately the forward gear, aft gear, forward rotor, and aft rotor to determine the optimum measurement method for each.

Aft Gear

A survey of the aft gear (Figure 2) suggested the following possibilities for measuring the bearing weight:

1. Measurement of axle deflection.

2. Measurement of bending stress in the spindle just below the swivel.

3. Measurement of the force reacted by the oleo strut and/or upper and lower link assemblies.

The measurement of the axle deflection as a function of wheel load has been used extensively in other aircraft with only marginal success. The primary problem is generally the poor slenderness ratio (i.e., length to diameter ratio) of the section of axle that is of interest. Because the area between the spindle and the inner wheel bearing has a constant shear force as measured along the axle center line, this portion is most commonly exploited. The advantage of measuring shear force is that the longitudinal positioning of the transducer is theoretically not critical, nor is the deflection a function of side forces. In practice, however, the nonsymmetrical end stresses at the spindle and bearing attachment points cause significant interference which results in poor repeatability and unpredicatable transducer output.

Additionally, the presence of the brake stator in this area reinforces the axle in a manner which is dependent on individual fit and wear, and requires optimum temperature insensitivity from the transducer during hard braking.

Analysis of the spindle indicates that the stresses in the 45° segment depend to a significant degree upon the side forces as well as the vertical force caused by weight. This means, in effect, that the transducer output will be influenced by uneven and inclined runways.

A serious disadvantage for any measurement made below the spindle swivel (including an axle deflection measurement) is the requirement for the aft gears to swivel 360°. Slip rings, or similar device, would have to be used to electrically connect the sensing device to the readout computer and power supply.

The reasoning presented thus far dictates that the shock strut and upper/lower links be analyzed to determine whether the reaction forces are proportional only to vertical loads, and comparatively insensitive to drag and side loads. The question of the effect of oleo strut service and loads distribution is also of interest and must be resolved.

The analysis of the aft gear presented in detail in Appendix 1 shows:

1. The upper link is of no interest since it does not react to vertical loads.

2. The lower link reacts to vertical loads, but responds equally to drag loads. This means that a measurement of weight via the lower link reaction force would apparently vary in the presence of drag loads caused, for example, by inclined runways.

3. The oleo strut reaction force appears to be the parameter of most interest. The reaction force is 1.3 times the vertical force due to weight on the gear (the mechanical advantage being a result of the vector addition of the reaction forces). Also, the oleo strut reaction increases less than 0.5% in the presence of 10% drag loads (i.e., shows good drag load rejection).

It was concluded at this point that a measurement of aft gear weight must be accomplished by measuring the oleo strut force.

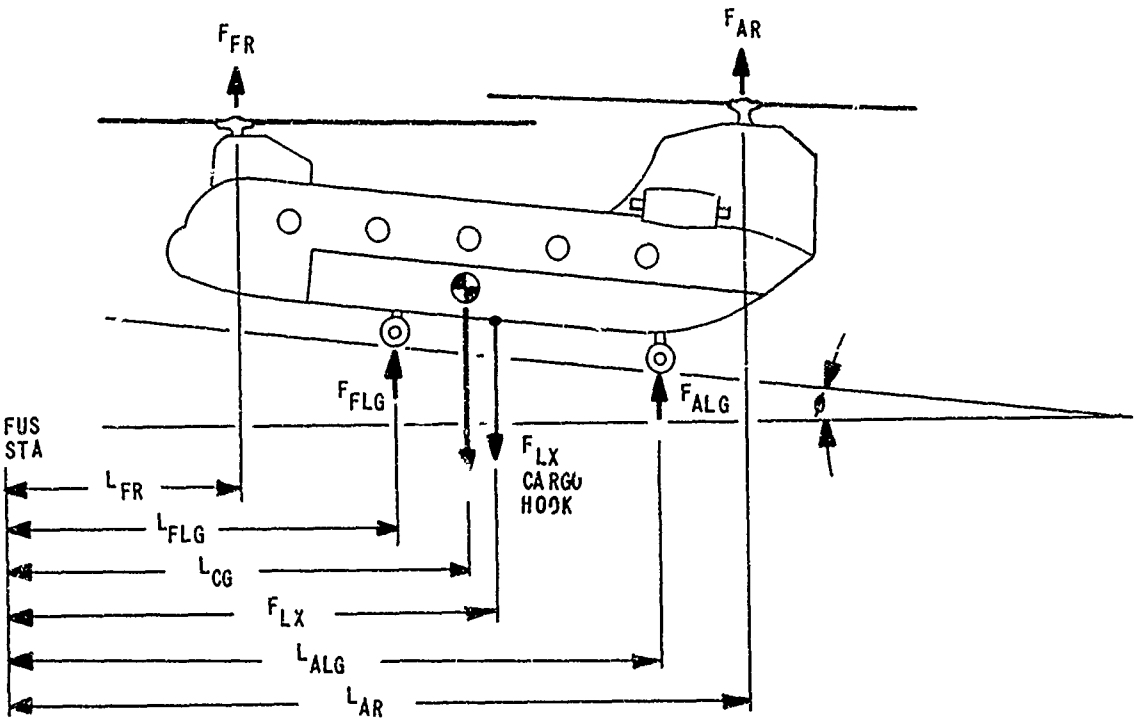

$$GW = F_{FR} + 2\,F_{FLG} + 2\,F_{ALG} + F_{AR} + F_{LX}$$

$$L_{CG} = \frac{F_{FR} \cdot L_{FR} + 2(F_{FLG} \cdot L_{FLG}) + 2(F_{ALG} \cdot L_{ALG}) + F_{AR} \cdot L_{AR} + F_{LX}\,L_{FX} \pm K\phi}{GW}$$

Figure 1. CH-47 Weight and Balance Equations.

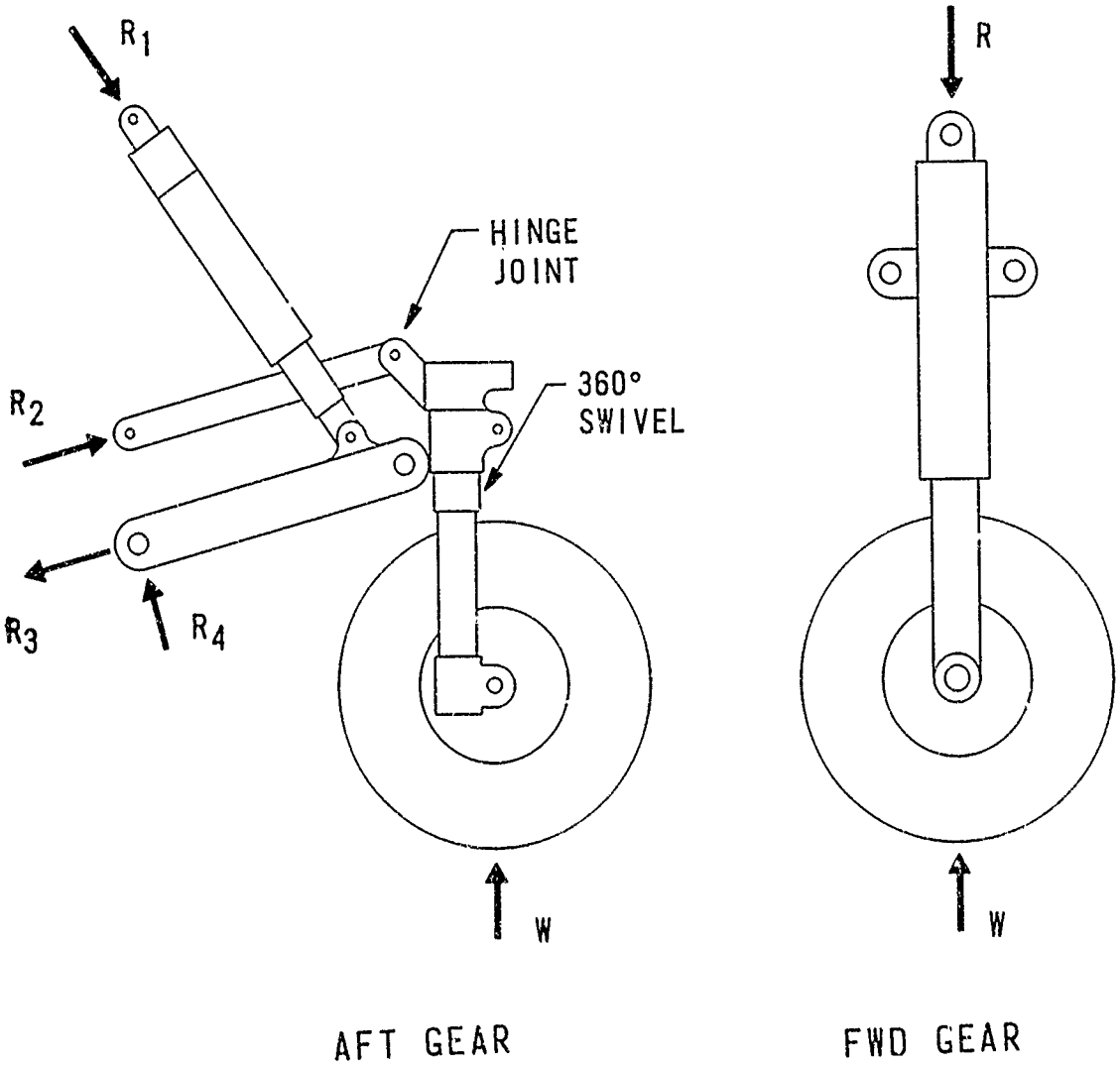

Figure 2. CH-47 Landing Gear Gravitational Forces and Reactions.

Forward Gear

The rationale applied to the aft gear was used in exploring the various options in measuring the forward gear weight. The location of transducers in the axle had little appeal, for although there are no brakes and consequently no heating problems, the slenderness ratio and end effects problems discussed earlier were again present.

One additional option explored, however, was the area of the strut attachment to the fuselage. Considerable effort was made to isolate a single load path in the structure for which the reactions are proportional to vertical load only. It was found that redundant paths are present in all cases, and it is certain that the reactions are unpredictably linked to the vertical component of weight.

As was the case with the aft gear, it was concluded that the vertical component of weight along the oleo strut center line must be measured.

Forward Rotor

An analysis of the forward rotor showed that the shaft is splined to interact with the multistage planetary gear reduction system and is restrained by a single thrust bearing. The bearing is in turn contained on the transmission cover, which fastens to the primary structure via four asymmetrical arms. The load path for the rotor lift reaction is therefore well defined. In other words, the load in the four arms of the transmission cover is directly proportional to rotor lift, and the problem becomes one of measuring stress in the arms themselves.

Aft Rotor

The situation for the aft rotor is analogous, the only difference being that the thrust bearing is contained in a separate housing located above the transmission.

Based on the foregoing, it was concluded that a system design concept would include, in addition to a computer and attitude sensors, the following:

1. An oleo pressure measurement on each of the four landing gears to yield a measurement accuracy of ±2% in the static (rotors not turning) mode.

2. A direct measurement of rotor lift to be used with the oleo pressure measurements to provide accurate readings in the dynamic mode (rotors turning).

3. A load cell installed directly in series with the cargo hook to measure external loads.

THE ROTOR LIFT TRANSDUCER

A survey of the forward rotor transmission cover, Figure 3, suggested several possible locations for a strain element transducer to be mounted to measure the reaction force in the arms:

1. On the arm center line at 45° to measure shear stress which is directly proportional to the reaction forces.

2. On top of the constant moment arm section to measure bending stresses.

3. On the interconnection web.

A stress analysis of the parts, confirmed by test results, indicated that the shear and web outputs were too low, thereby eliminating those options.

A strain transducer was therefore developed to install on the top edge of the arm. The transducer, essentially a strain gage encapsulated in molded frame with connector, was tested on a deadweight bending fixture opposite standard strain gages to assure that its characteristics were comparable to a

strain gage without frame. Temperature tests were also conducted which showed the transducer to have a flat response over the range from -55°F to +165°F as a result of the intimate heat sinking of the four discrete elements, and the absence of dissimilar materials within the bridge.

The four strain gage elements are electrically connected in a Wheatstone bridge configuration and are geometrically oriented to measure surface strain produced at the top of the transmission cover mounting arms. Two of the elements lie along the center line, while the two remaining elements are oriented at 90° to measure the accompanying Poisson component of strain.

The strain gage transducer is comprised of a four-element strain gage bridge encapsulated for mechanical and moisture protection in a molded frame. The elements are wired to a small connector prior to encapsulation, thereby enhancing the replaceability of the device. An O-ring was added to the connector to improve the hermetic sealing. The strain transducer with connector was tested for 240 hours at a cycling temperature of 80°F to 175°F at 95% relative humidity without deterioration of the insulation resistance.

A metal cover, with a molded rubber insert, fits over the transducer for mechanical protection. The cover also acts as a clamping device when bonding the transducer in place.

SUMMARY OF SYSTEM DESIGN

The final system design consisted of the following components:

- Four strain gage based pressure transducers, 1500 psia (rated), installed one each on the forward and aft landing gear oleo struts

- Four pressure manifolds which install directly into existing strut filler ports and provide transducer attachment fittings and a relocated port for oleo servicing

- Four quick disconnects which allow the transducer to be replaced without affecting oleo service pressure

- Eight strain elements bonded to the forward rotor transmission cover and aft rotor lift bearing housing

- Eight protective covers for the transducers which also serve as clamping fixtures during bonding

- Four junction boxes for making the transition from transducer pigtail to armored cable

- Two attitude sensors which mount in the aircraft and correct gross weight and center of gravity for inclinations to 10° in the longitudinal and lateral directions

- One cargo hook load cell which attaches in series with the cargo hook carriage assembly and measures hook load

SYSTEM DESIGN CHARACTERISTICS

The characteristics of the system can be described as follows:

The pressure transducers provide a signal which is proportional to the weight borne by the landing gears. In the dynamic configuration, the strain transducers on the rotor structure measure rotor lift and correct the oleo pressure-based weight reading. While it is conceivable that gross weight could be measured by the rotor transducers alone with the ship in the hover mode, the transducers were specifically designed for a nominal lift of 6,000 pounds.

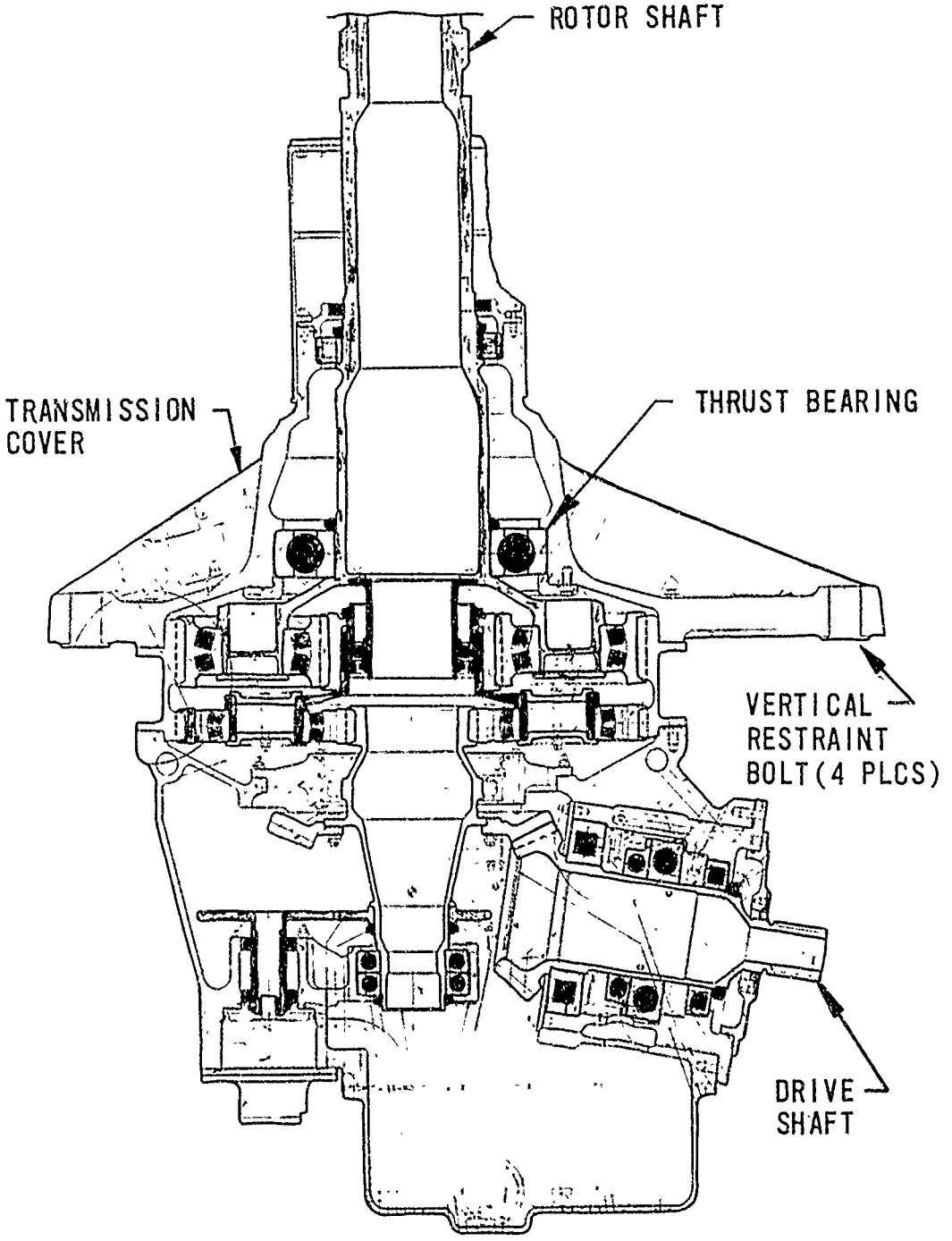

Figure 3. Forward Rotor Transmission.

Reproduced from best available copy.

EFFECT OF TEMPERATURE

The oleo strut pressure transducers are compensated in the laboratory to have less than 0.005%/°F variation over the range of -65°F to +140°F. The strain transducers are self-compensated in that all elements are cut from the same foil and are heat treated to match the thermal expansion rate of the aluminum forgings on which they are mounted. No dissimilar metals are used within the bridge orientation to avoid thermocouple EMF.

ENVIRONMENTAL CHARACTERISTICS

All metallic elements of the transducers are corrosion-resistant materials, nickel plated or anodized. The pressure transducer is of all-welded construction. The strain transducers are potted with encapsulants designed for complete immersion in water, hydraulic oil, and fuel. All low-level signal wires are sealed or encapsulated. The short pigtail leads are led directly to hermetically sealed junction boxes, where a transition is made to armored cable. The junction boxes contain inspection plates that incorporate moisture sealing gaskets.

INSTALLATION

The oleo pressure transducers are installed on a special manifold, which in turn screws into the existing strut service ports. A pillow block is installed between the transducer and the strut, and a clamp is used to secure the entire assembly. The cable is routed through conduit to the computer/indicator.

The rotor transducers are installed by cleaning and preparing the surface of the forging, and bonding the unit in place using a special ambient-temperature adhesive. The cover acts as the clamping device, and it need not be removed again unless the transducer is to be replaced.

The rotor transducer junction boxes are designed to be installed using existing structural bolts.

The attitude sensors are installed at any convenient location in the aircraft on solid primary structure.

Installation of the cargo hook load cell is accomplished by removing the hook from the carriage assembly and replacing the intermediate fitting with the load cell assembly.

LABORATORY TESTS

To establish the accuracy of WBS under simulated operating conditions in the laboratory, a prototype CH-47 system was fabricated per the drawing list given in Appendix II. Government-furnished CH-47 forward and aft landing gears and selected rotor structures were instrumented and tested under load in specially designed reaction fixtures. The errors in the indicated weights, when compared with the applied loads, were recorded under various adverse operation conditions. The system error was then determined by inserting the appropriate errors into a statistical system model.

The conditions of operation simulated in the laboratory were as follows:

1. Static rotors, level terrain

2. Static rotors, unlevel terrain

3. Dynamic rotors, level terrain, nominal rotor tip path plane angle

FORWARD ROTOR

The forward rotor transmission cover was tested in a fixture which holds the cover in place at the ends of the four support arms. A special reaction plate was fabricated to simulate the thrust bearing, and loads were applied to the plate via a ball joint pivot. Forces to 3,000 pounds were exerted by the manually pumped hydraulic actuator, which attached to the ball joint through a standard load cell connected in series.

The loads were generated by pumping the actuator to a force level established by reading the output of the load cell on a separate portable readout instrument. The load cell and readout are calibrated and certified to ±0.25% against tertiary standard deadweights traceable to the National Bureau of Standards.

The lower fitting plate of the fixture is designed so that the load train may be operated up to 10° away from vertical in two mutually orthogonal planes. This allows the simulation of varying tip path plane angle which occurs as the cyclic patch control is varied. The tip path plane angle is defined by the line connecting the rotor tips and a horizontal line.

The results of the tests indicate that the nonrepeatability and nonlinearity of the indicated rotor lift at nominal tip path plane angles are 40 pounds (maximum). At angles to 10° (the worst case), errors of up to 180 pounds were seen at some positions; see Figure 4.

AFT ROTOR

The aft rotor was instrumented and tested in a manner similar to that described for the forward rotor. In this case the specific structure tested was the thrust bearing housing, which is located above the transmission. The thrust bearing was again simulated by a flat plate machined for a close-tolerance fit in the bearing race. A small permanent fixture was attached to serve as a reaction platform, and the entire assembly was installed in the Tinius Olson static load machine. The reference loads applied by the machine are certified to be accurate within ±1%. The linearity and repeatability of the machine, which are of primary importance in a test of this type, are actually several factors better. The figure quoted is the maximum systematic deviation from an actual standard of weight at the Bureau of Standards.

The results for the aft rotor are comparable to the forward rotor: 40 pounds (maximum) error under nominal conditions, and up to 180 pounds at worst-case tip-path-plane angles.

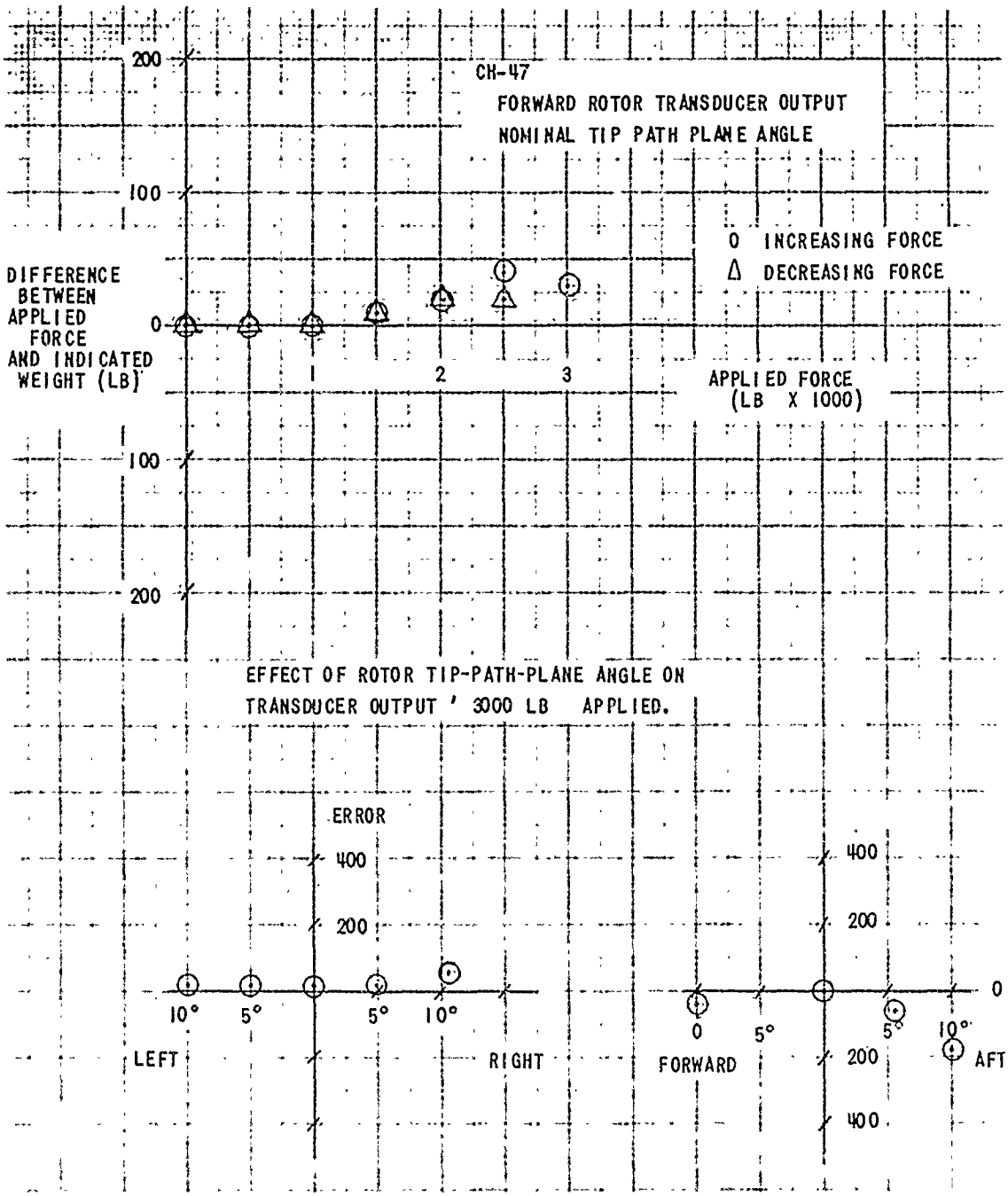

Figure 4. Forward Rotor Transducer Performance in the Laboratory.

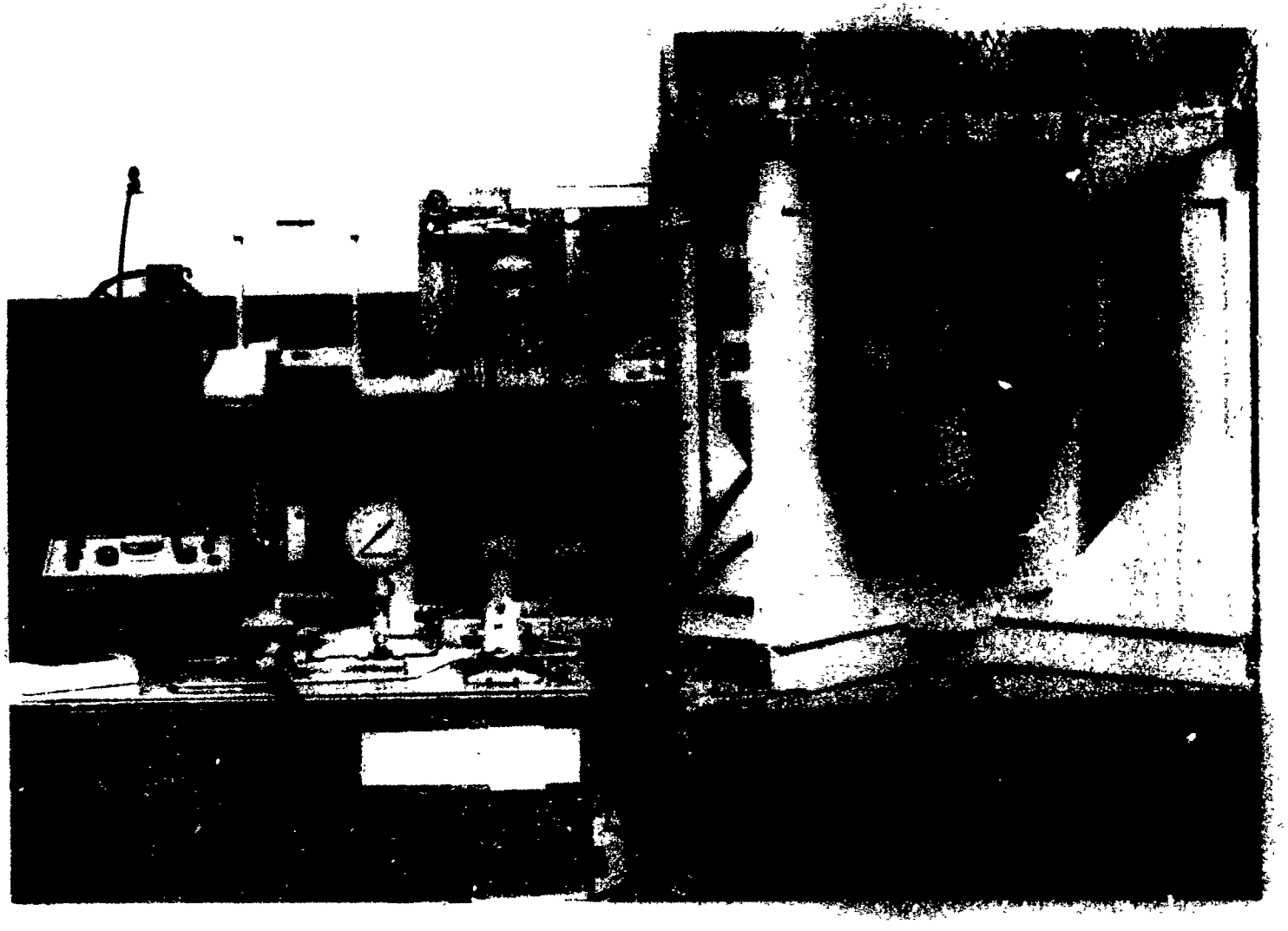

Figure 5. Forward Rotor Test Fixture.

AFT LANDING GEAR

To test the aft landing gear, it was necessary to design and fabricate a holding fixture as shown in Figure 6. The entire gear and fixture when assembled were placed in the Tinius Olson static load machine, and loads from 3800 to 5800 pounds were applied. This operating range is defined by the minimum weight on the landing gear, that is, aircraft empty, and the maximum weight on the gear with maximum gross weight and center of gravity farthest aft. See Appendix III.

The gear was then tested by comparing the oleo strut pressure transducer readings with the applied loads as established by the loading machine. The transducer output was read out on display, which was calibrated so that a direct pounds-to-pounds comparison could be made.

The output of the transducer was found to have a nonlinear characteristic around zero, so it is advantageous from the standpoint of minimizing the error to set the calibration over the operating range only. That is, at zero weight the indicator does not read zero. The quality of the readings can be significantly improved in this manner, as shown in Figure 7.

The characteristic of the pressure transducer output with load shows the expected classical hysteresis loop as a result of oleo friction. With increasing loads, part of the weight forces are reacted by the friction, causing the pressure to be on the low side. As weight is removed, the friction causes the strut to "hang up", resulting in higher readings. By a judicious choice of calibration point, however, the calibration curve can be set to divide the error and the maximum errors due to friction can be held to ±300 pounds in the worst case without benefit of dither.

The geometry of the gear is changed by the service pressure of the oleo strut in such a manner as to vary the real load on the strut. A variation of 1 inch in strut length, for example, will change the apparent gear loading by 100 pounds. Since the gear servicing is monitored for other readings, however, it is not expected to be a problem for in-service operation.

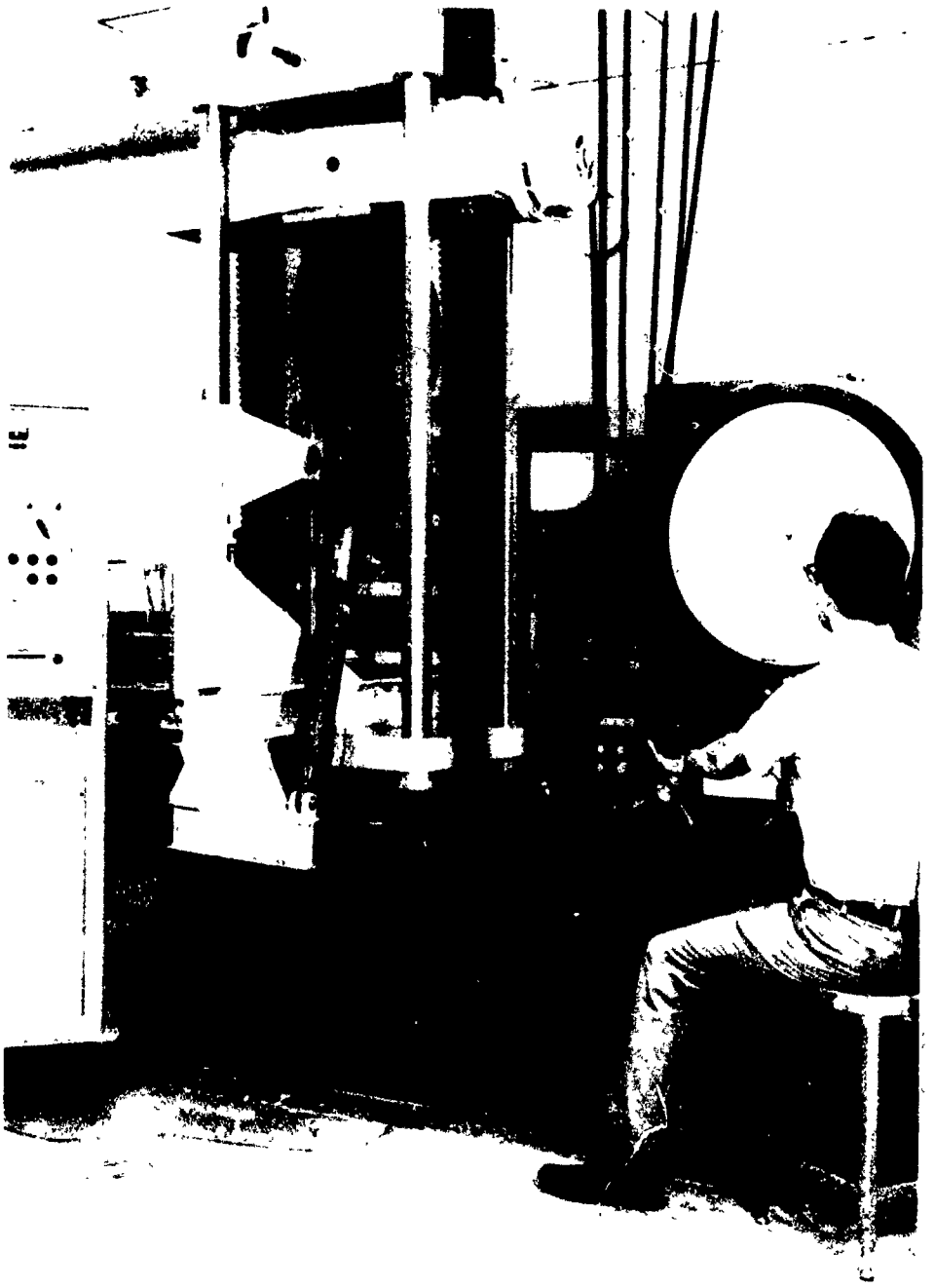

Figure 6. Aft Landing Gear Test Fixture.

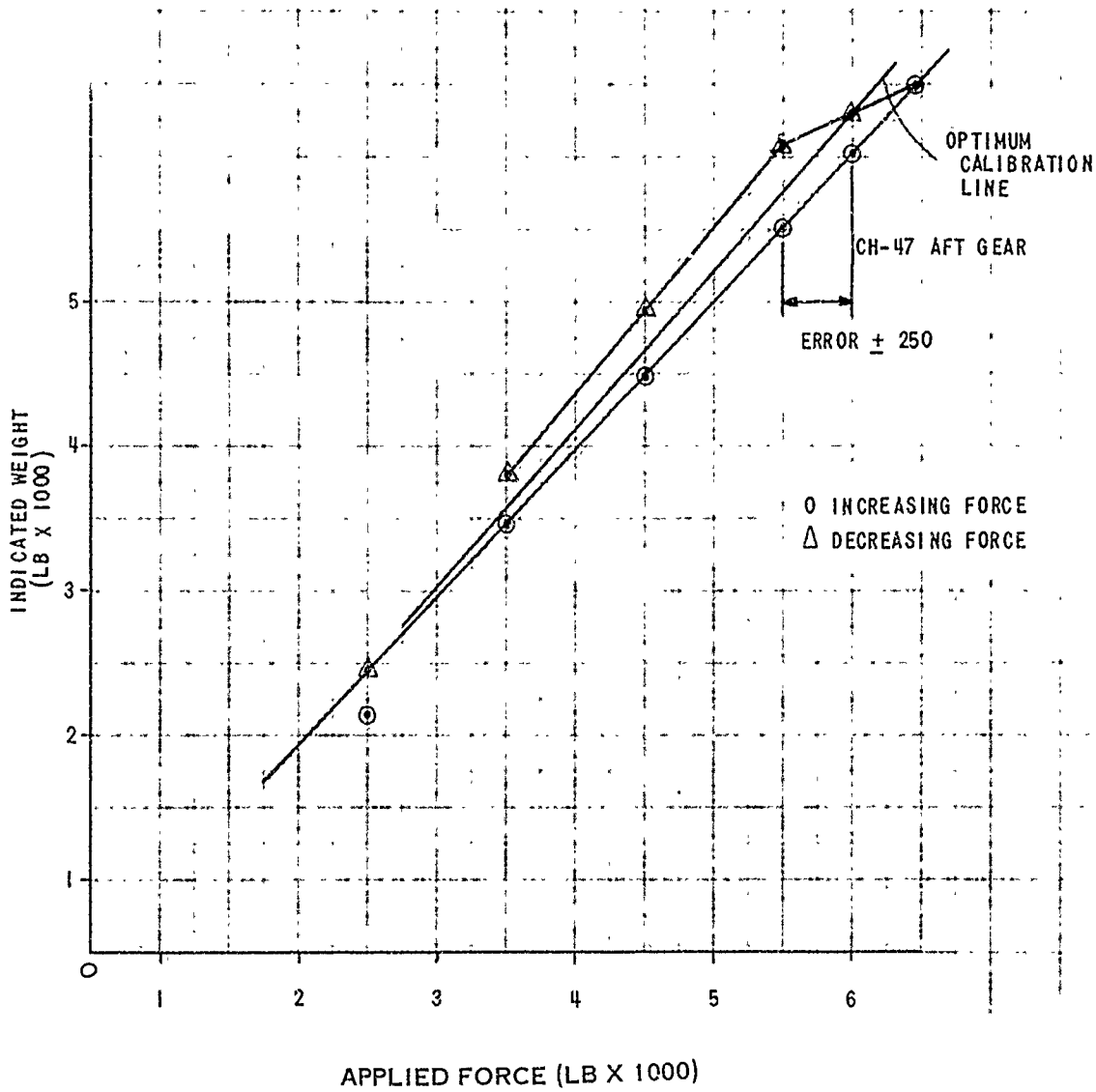

Figure 7. Aft Landing Gear Laboratory Data.

The simulation of 3° slopes by placement of a suitable ramp under the tires produced no apparent variation in the weight readings.

FORWARD LANDING GEAR

The relatively less complicated forward landing gear was tested by building a small holding fixture which allowed the gear to be loaded right side up in the Tinius Olson machine. A pressure transducer was installed in the oleo strut and read out on an indicator calibrated in pounds. The loads in this instance were applied to 13,000 pounds, the maximum load which would be exerted on the forward gear at 34,000 pounds gross weight and maximum forward center of gravity.

The results of the tests were similar in most respects to the aft gear tests. A pronounced nonlinearity was again evident, requiring an optimized calibration to be made as shown in Figure 8. By this method the maximum error is reduced to ±180 pounds.

No variation in weight readings was seen as the strut pressure was varied. This is as expected, since the center line of the strut in this case is in the vertical direction.

The 3° ramp plate was also used in these tests to simulate sloped terrain, with no apparent degradation in the readings.

DATA ANALYSIS

To determine the system errors under the various operating conditions, the appropriate component errors are combined to determine the root-sum-squared (RSS) value. This is a standard technique employed to combine statistically independent errors to assess a realistic net error.

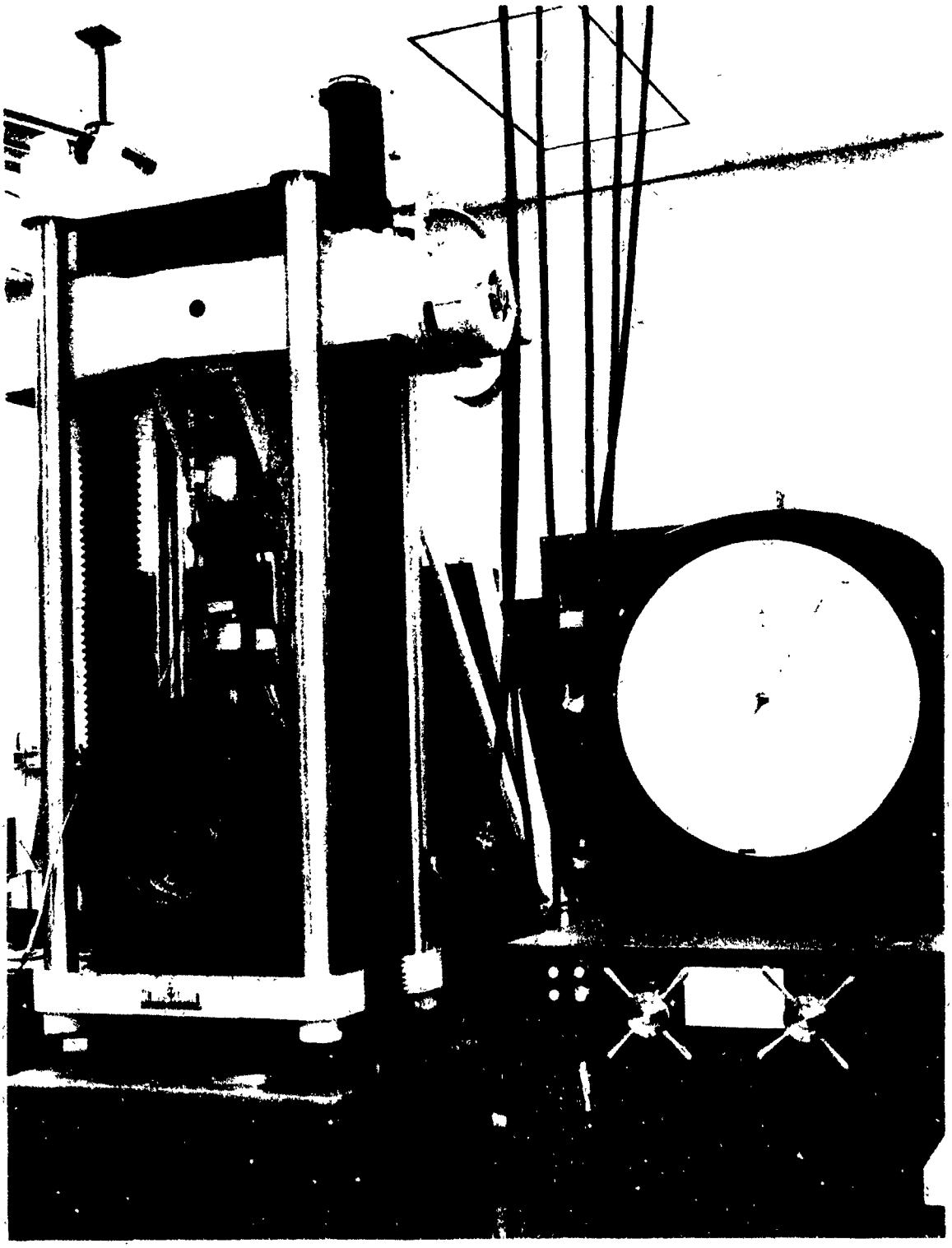

Figure 8. Forward Landing Gear Test Fixture.

Reproduced from best available copy.

To calculate, for example, the system error under conditions of static rotors and level terrain, the RSS value of two forward gear and two aft gear nonlinearity errors is found. Similarly, under dynamic conditions, the RSS equation is expanded to include the rotor errors.

In order to calculate the center of gravity errors, the effect of each component weight error on CG accuracy is determined. The individual CG errors are then combined to form the RSS net CG error. A detailed development of the RSS equations is shown in Appendix IV.

The RSS errors calculated for each test condition are shown in Table I.

TABLE I. PROTOTYPE SYSTEM ACCURACY IN LABORATORY

CONDITION	ERROR INPUTS (lb)	RSS SYSTEM GROSS WEIGHT ERROR (%)	RSS SUSTEM CG ERROR (in.)
STATIC, LEVEL TERRAIN	FWD GEAR ±160 AFT GEAR ±300	1.4 F.S.	2.4
DYNAMIC, LEVEL, NOMINAL ROTOR TIP PATH-PLANE ANGLE	FWD GEAR ±160 AFT GEAR ±300 FWD ROTOR ±40 AFT ROTOR ±40	1.4	2.5
DYNAMIC, 10° ROTOR TIP-PATH-PLANE ANGLE	FWD GEAR ±160 AFT GEAR ±300 FWD ROTOR ±180 AFT ROTOR ±180	1.6	3.0
EFFECT OF TEMPERATURE	FWD GEAR NEGL. AFT GEAR NEGL. FWD ROTOR ±100 AFT ROTOR ±100	0.4	0.9
EFFECT OF IMPROPER OLEO SERVICING	AFT GEAR ±100	0.4	0.6

NOTES:

1. ROTOR SPEED ~ 230 RPM
2. CYCLIC AND DIRECTIONAL CONTROLS CENTERED
3. THRUST CONTROL ROD IN 3-DEGREE DETENT
4. Δ CENTER OF GRAVITY BASED ON CG (HEADWIND) MINUS CG (VARIOUS WIND DIRECTION)
5. Δ GROSS WEIGHT BASED ON GW (HEADWIND) MINUS GW (VARIOUS WIND DIRECTION)
6. AVERAGE AIRCRAFT ATTITUDE, PITCH ~ 2° 40' NOSE UP
   ROLL ~ 40' RT
7. AVERAGE AMBIENT TEMPERATURE ~ 42°F
8. WIND < 3 KNOTS
9. AVERAGE CG LOCATION ~ 329.5 IN.
10. AVERAGE GROSS WEIGHT ~ 29,700 LB

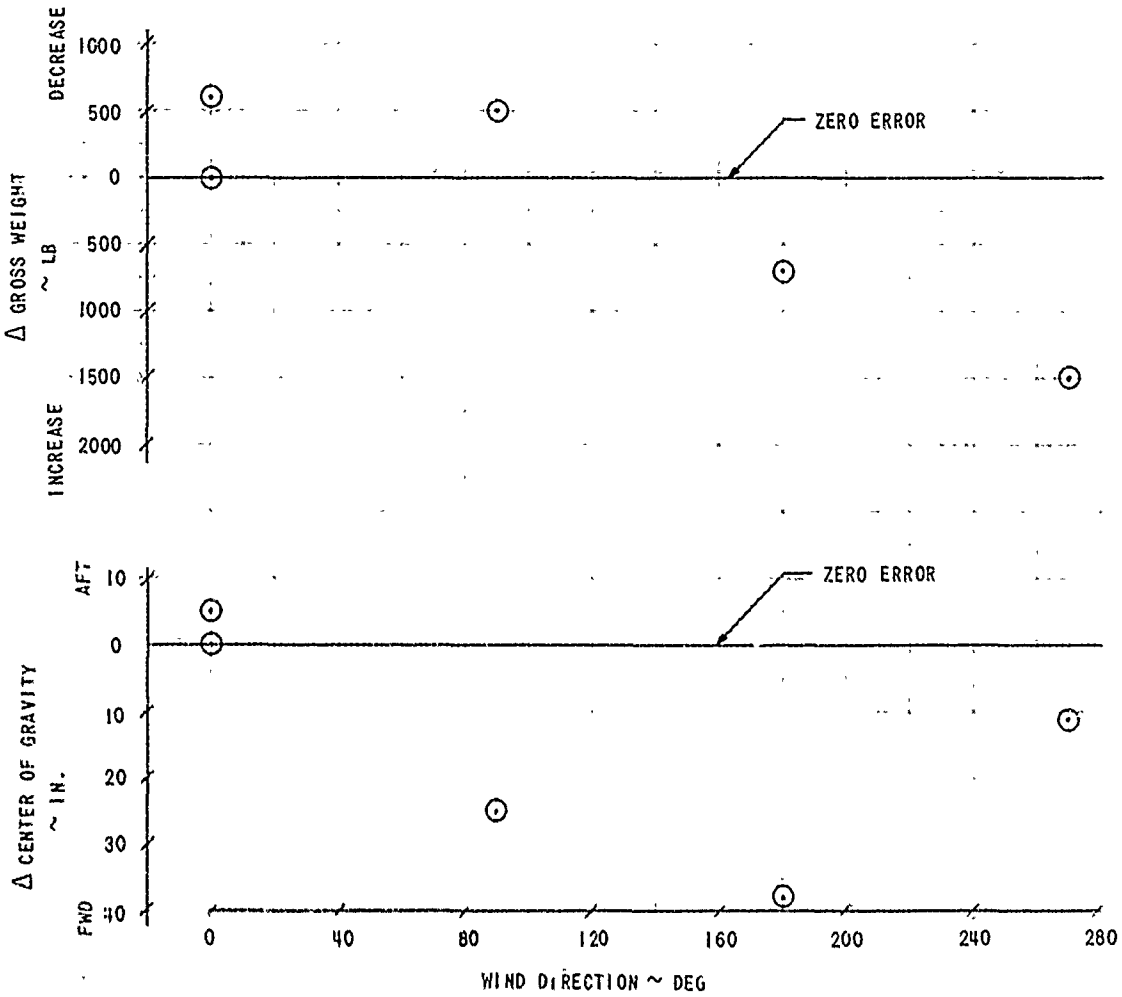

Figure 9. Effects of Wind Upon Gross Weight and Center of Gravity.

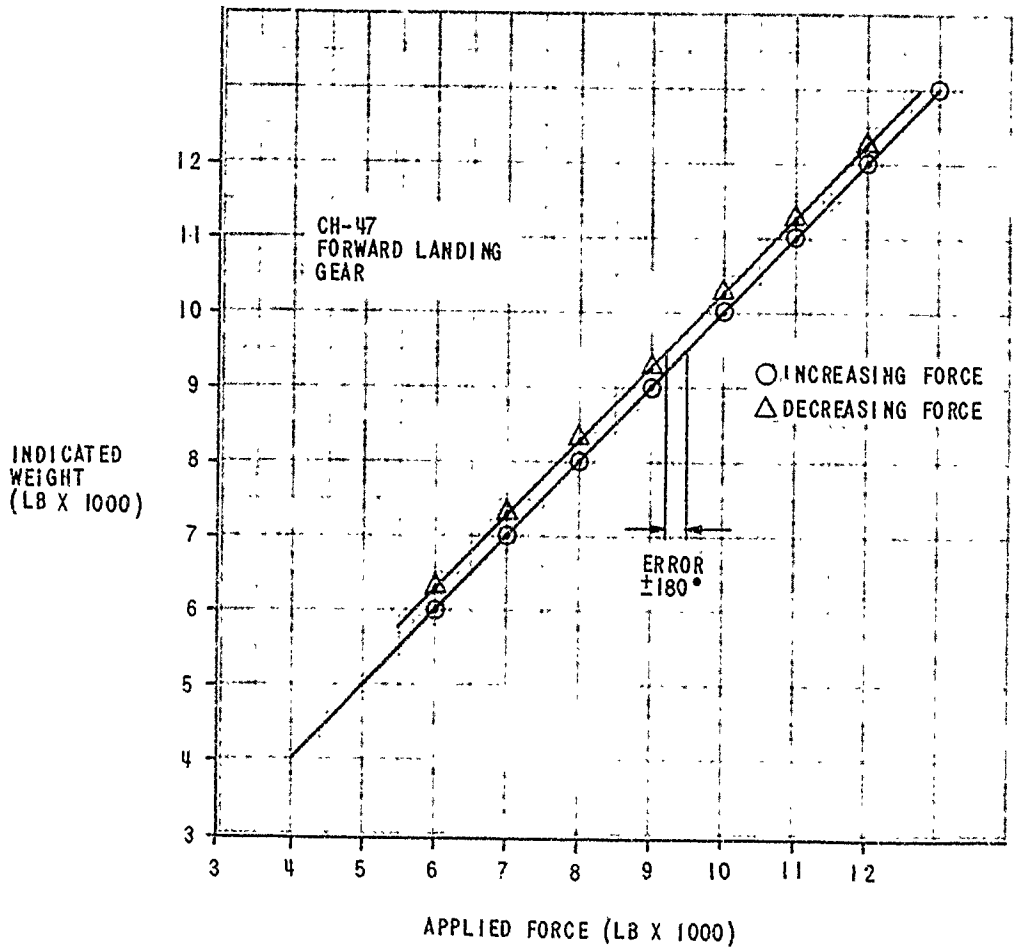

Figure 10. Forward Landing Gear Laboratory Data.

FLIGHT TEST EVALUATION

A flight test evaluation of the CH-47 prototype system began in April 1972. Landing gear and rotor lift transducers were fabricated in the initial phase of the program.

The computer and attitude sensors were selected from units already in production at Electro Development Corporation for the Lockheed L-1011 Tri Star weight and balance system. Extensive modifications were required to account for the lower gross weight, revised landing gear fuselage stations, ship's geometry for center of gravity calculations, and rotor lift and cargo hook inputs.

Modification and fabrication of the system hardware were completed in July 1972 and the installation of the system aboard a CH-47B at the U. S. Army Aviation Systems Test Activity, Edwards AFB, California, began September 18, 1972. Testing was completed on December 14, 1972.

TEST PLAN

The tests were designed to compare the gross weight and center of gravity readings from the on-board system to the actual gross weight and CG as determined from platform scales.

Initially, the landing gear pressure transducers were calibrated to agree with the scale readings and calculated CG. Normally, pressure transducers are preset and require no field calibration. It was found in the laboratory, however, that it is possible to substantially reduce the effects of static friction (i.e., hysteresis) and gear nonlinearity by an in-place, comparison calibration. The rotor transducers were set by comparison with the static loads imparted to each rotor shaft via an overcrane and load cell. The attitude sensors and cargo hook load cell were preset in the factory and required no on-site calibration.

After calibration, the helicopter was subjected to both nominal and extreme operating conditions with the rotors static and dynamic. The configuration of the helicopter was also varied from basic weight (defined as the weight of the empty ship with residual fuel and oil) to the maximum gross weight of 40,000 lb. for the CH-47B on which the tests were conducted.

During the static (i.e., rotors static) portion of the tests, the indicated gross weight and center of gravity are based on the outputs of the landing gear pressure transducers and attitude sensors. While in the dynamic mode (i.e., rotors turning), the indicated weights and CG are based on the landing gear pressure transducer inputs plus the correction for rotor lift as supplied by the transducers located on the rotor transmission structure.

The test conditions are summarized as follows:

Static accuracy from 28,000 to 40,000 pounds

Static accuracy with unlevel terrain to $\pm 10^{\circ}$ (aircraft heavy and light, CG forward and aft)

Ambient temperature effect during a 24-hr interval

Dynamic accuracy from 28,000 to 40,000 pounds

Dynamic accuracy with unlevel terrain to $\pm 10^{\circ}$ (aircraft heavy and light, CG forward and aft)

Dynamic accuracy with wind present

Dynamic accuracy with control variance

Accuracy in flight

Hook load accuracy

To establish known conditions of gross weight and CG over the operating range, vehicles and lead shot bags were placed aboard at precise fuselage stations during the platform weighings. Each load configuration was then duplicated during the tests by loading the cargo elements and accounting for the quantity of fuel aboard.

SYSTEM INSTALLATION

Installation of the system began on September 18, 1972, and required approximately 3 man-weeks to complete. The work was performed by EDC personnel except where the installation interfaced with primary structural elements and systems. The removal of the transmission cover bolts, for example, which is required to install the rotor transducer covers and brackets, was done by Army personnel. Similarly, the installation of the oleo strut pressure transducers and manifolds, which was accompanied by a flushing and cleaning of the oleo strut chambers, was accomplished by the ship's crew.

The bulk of the time was used in installing the interconnecting cables between the rotor and landing gear transducer locations and the computer. The computer was located, along with the attitude sensors, in the electronic equipment rack located directly behind the copilot's position at fuselage station 120. Additional fuel flowmeters with totalizers, fuel temperature indicators, stick/pedal/collective position indicators, inclinometer, wind gauge, and built-in temperature gauge were also installed for use in the tests.

CALIBRATION

The on-board weight and balance system was calibrated using the Fairbanks and Morse platform scales. The helicopter was positioned with both forward planning gears on the nose gear platform, and each aft landing gear on a separate main gear platform. Individual gear weights were not required since the computer adds the forward and aft gear inputs in any case for use in the center of gravity location formula.

The nose gear platform was raised and lowered for leveling the aircraft, and was also used to vary the ship's pitch attitude for a portion of the tests. All of the static accuracy tests were performed with the helicopter on the scales.

To calibrate the rotor transducers, the rotor shaft was loaded by pulling with an overhead crane at the ring normally used to pull the mast during maintenance. A 20,000 pound Cox-Stevens load cell in series with the crane provided a reference against which to compare the rotor lift transducers.

TEST RESULTS

The static accuracy on level terrain is the least demanding test condition and represents a baseline or optimum accuracy for the system. Table II shows gross weight accuracy to be within $^{+0.9\%}_{-0.1\%}$ full scale, where full scale is defined as 40,000 lb, and the center of gravity within $^{+0.8}_{-2.3}$ in., over the range of basic weight to 40,000 lb. The results obtained are somewhat better than have been obtained from previous tests, and significantly, no effort was made to bounce the aircraft to reduce the strut static friction. The improvement is attributed to minimizing the linearity and hysteresis characteristics of the strut pressure vs weight curve with the direct comparison calibration (vis-a-vis a preset factory calibration). A small amount of lubricant was put in the strut. (This is the practice of several airlines who use oleo strut weight and balance systems, but the effect of the lubricant, if any, is not established).

The static gross weight accuracy at roll attitudes to 7 degrees, shown in Table II , was found to be $^{+2\%}_{-0\%}$. The test plan originally called for roll attitudes to 10°, but as the tests were conducted on actual off-runway slopes, it was felt that a certain risk of roll-over existed with engines off at the high roll attitude. Static roll attitudes of more than 5° are probably unrealistic.

TABLE II. STATIC ACCURACY, LEVEL TERRAIN

SCALE GROSS WT	WBS GROSS WT	GROSS WT	GROSS WT ERROR % F.S.	CG CALCULATED FROM SCALES	WBS CG	CG ERROR (in.)
23,855	23.8	-50	-0.1%	339.2	340	0.8
29,613	29.9	290	0.7	332.3	330	-2.3
33,175	33.2	30	0.1	328.1	326	-2.1
40,037	40.2	170	0.4	331.2	332	0.8
34,623	35.0	380	0.9	327.6	328	0.4
31,971	32.2	230	0.6	332.6	331	-1.6
23,851	23.8	-50	-0.1	338.7	340	1.3

Gross weight errors at pitch angles up to 10° were found to be ±5% full scale. The characteristic of the error, as shown in Figure 11, suggests that the attitude correction was too large at positive angles and too small at negative angles. The attitude sensor is designed to provide an equal correction for both plus and minus attitudes as shown by analysis. A portion of both the roll and pitch attitude errors, however, was caused by increasing oleo static friction as the side force on the strut increased. An improvement in the reading could often be noted by bouncing up and down within the aircraft. CG errors at both roll and pitch attitudes were generally less than 5 inches.

The static accuracy of the rotor lift sensors, measured during the several calibration runs, is shown in Figure 15, and is generally in agreement with the accuracy of ±100 lb measured during the laboratory tests. This suggests that the laboratory setup of the rotor lift structure with mock-up lift bearings and reactions was an adequate and realistic simulation of the static case. As will be seen, the rotor sensor outputs deteriorate when the lifting force is generated by the dynamic rotors.

During the calibration of the rotor lift transducers, it was noted that the clocking position of the forward rotor blades caused apparent changes in the output of the transducers to an equivalent of 2,000 lb. That is, a change could be induced by moving one blade to change the stroke of the associated shock absorber. No such similar behavior was seen on the aft rotor.

Additional experiments with varying the blade position showed that the weight error would occur only if the swash plate had settled at a severe angle after the shutting down of hydraulic power. It is concluded that the pitch links transmit forces into the transmission cover via the dual actuators, the magnitudes of which are related to swash plate angle. The forces are sensed by the rotor lift transducers installed on the cover. In the case of the aft rotor, the dual actuating cylinders are not connected to the lift bearing housing. This would account for absence of the error in the aft lift bearing housing.

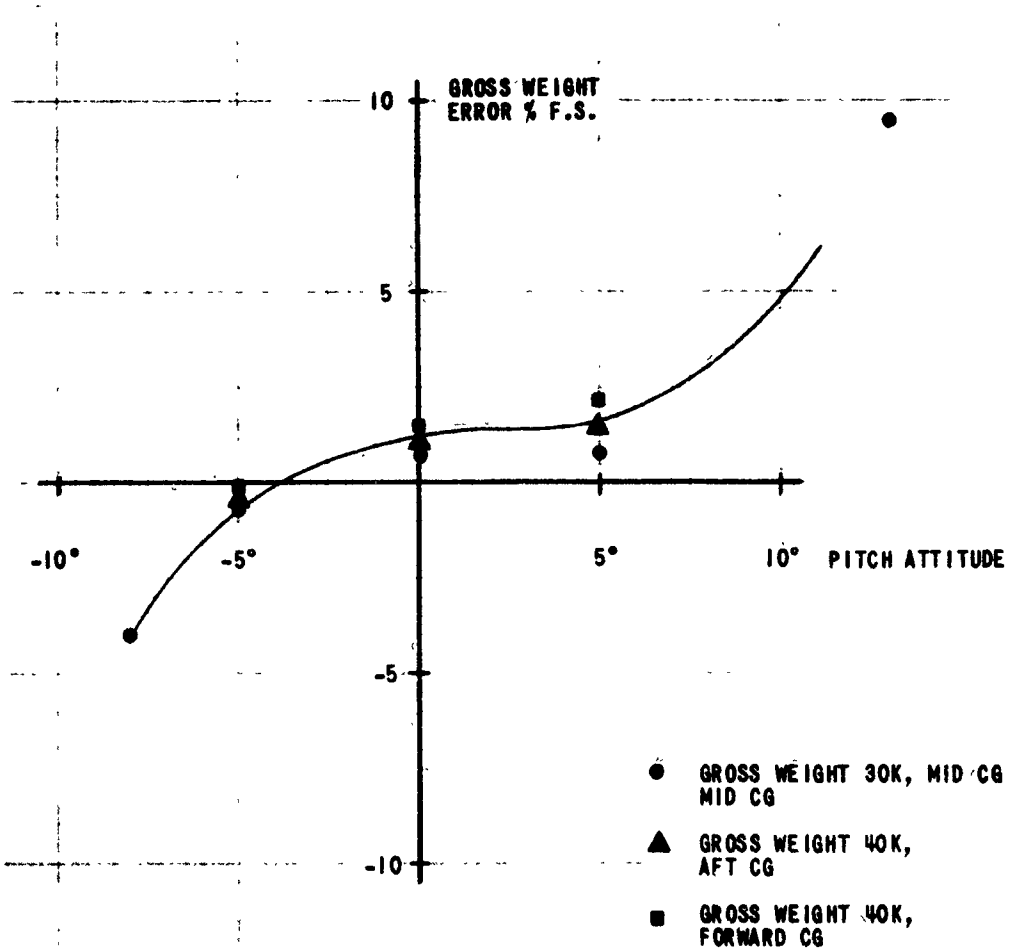

Figure 11. Gross Weight Static Accuracy
With Pitch Attitude.

The importance of the effect of swash plate angle is that the static weight of the helicopter is the sum of the landing gear transducers and the rotor lift sensors. If the swash plate is at a severe angle, the lift sensors, which should show zero lift with the rotors not turning, will introduce large errors in static readings.

A further symptom of the interaction of the pitch link forces into the rotor lift measurement is an apparent lift change of 2,000 - 3,000 lb when the hydraulic system is energized. In this case, the swash plate raises several inches into its position with the controls at nominal settings. The net result of the effect of the blade clocking and swash plate errors is that the lift sensors must be deactivated when the rotors are static. This was accomplished during the test by manually switching off the rotor channels for static weight readings.

A further problem in rotor lift sensing was found when the rotors were brought up to 230 rpm. As shown in Figure 17, the thermal stresses set up in the transmission as the oil heats cause a change in output of the transducers of an apparent 15,000 lb. The output is a result of deformation caused by temperature gradients as the output vs temperature tests conducted in the laboratory showed errors of less than 1% full scale at temperatures to 160°F. In the laboratory, however, the structure was heated uniformly in an oven. The transient gradient nature of the heating is further shown in a comparison of two runs at temperature with a 4-hour cool-down in between. The weight error is dependent upon not only the magnitude of temperature but also the heating rate.

The aft rotor shows much less effect during heat-up. A reasonable explanation is that the lift bearing housing, on which the transducers are mounted, is located several feet above the transmission. While the housing is lubricated by oil from the transmission, the heating is at a relatively slow rate.

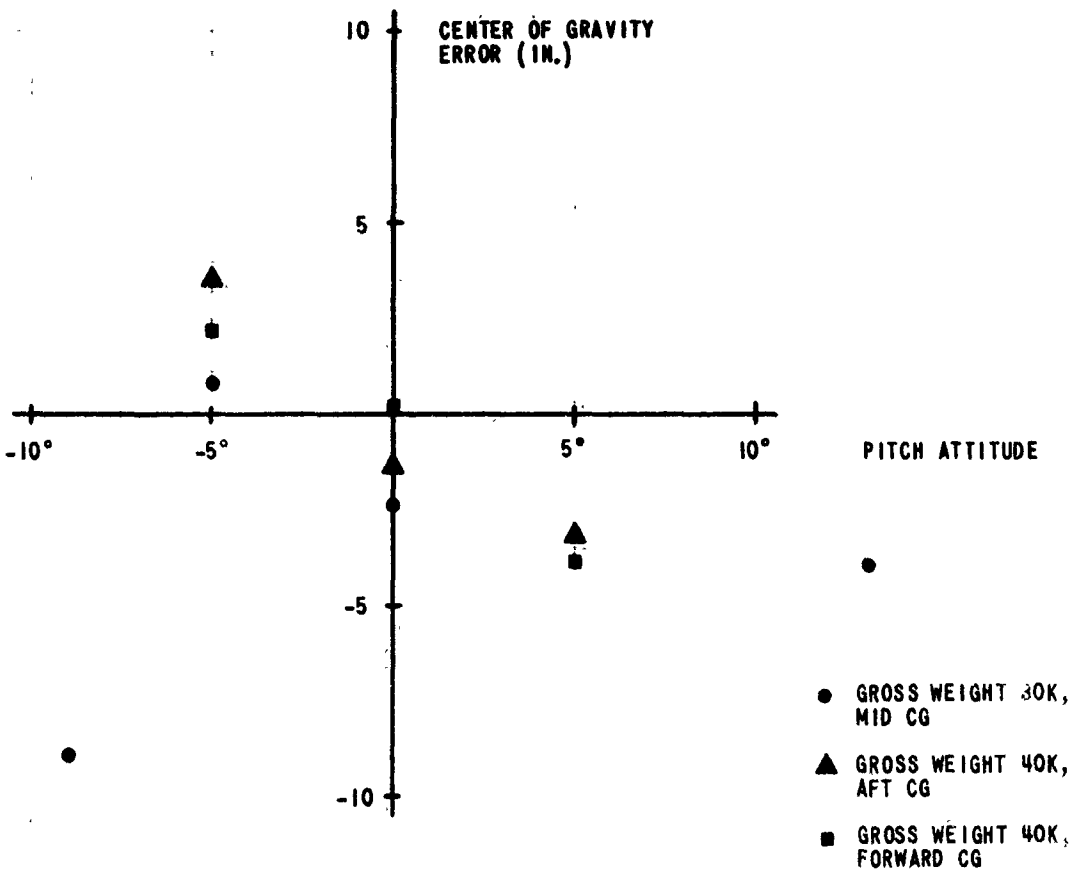

Figure 12. Center of Gravity Static Accuracy With Pitch Attitude.

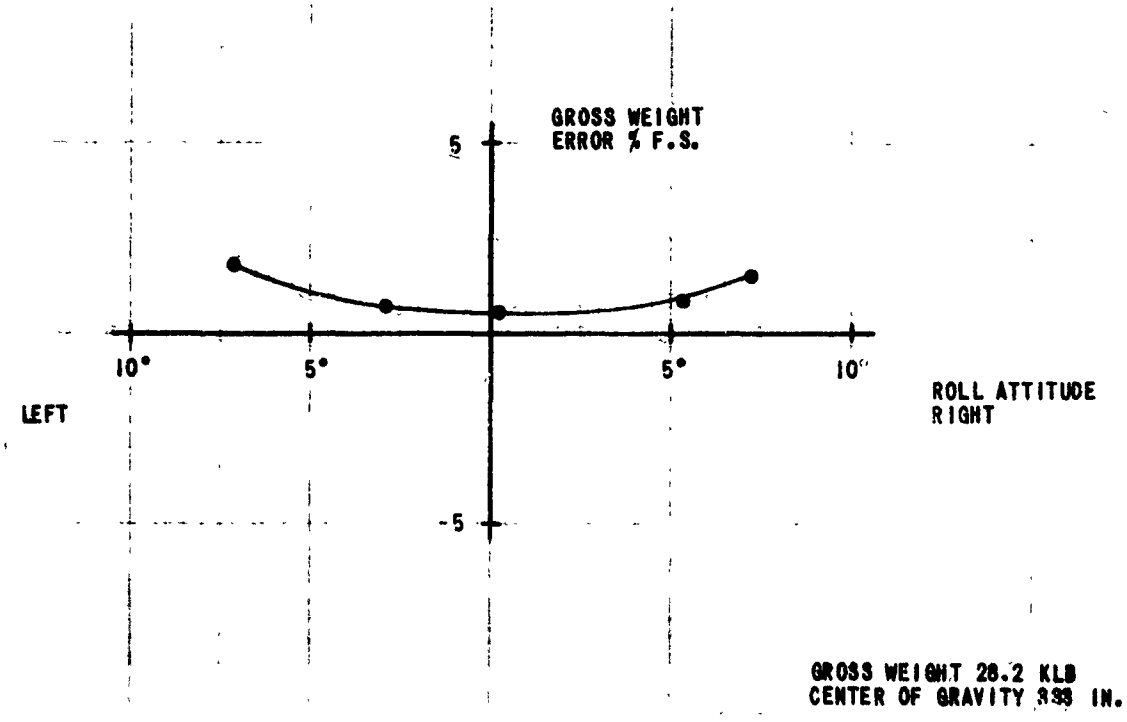

Figure 13. Gross Weight Static Accuracy With Roll Attitude.

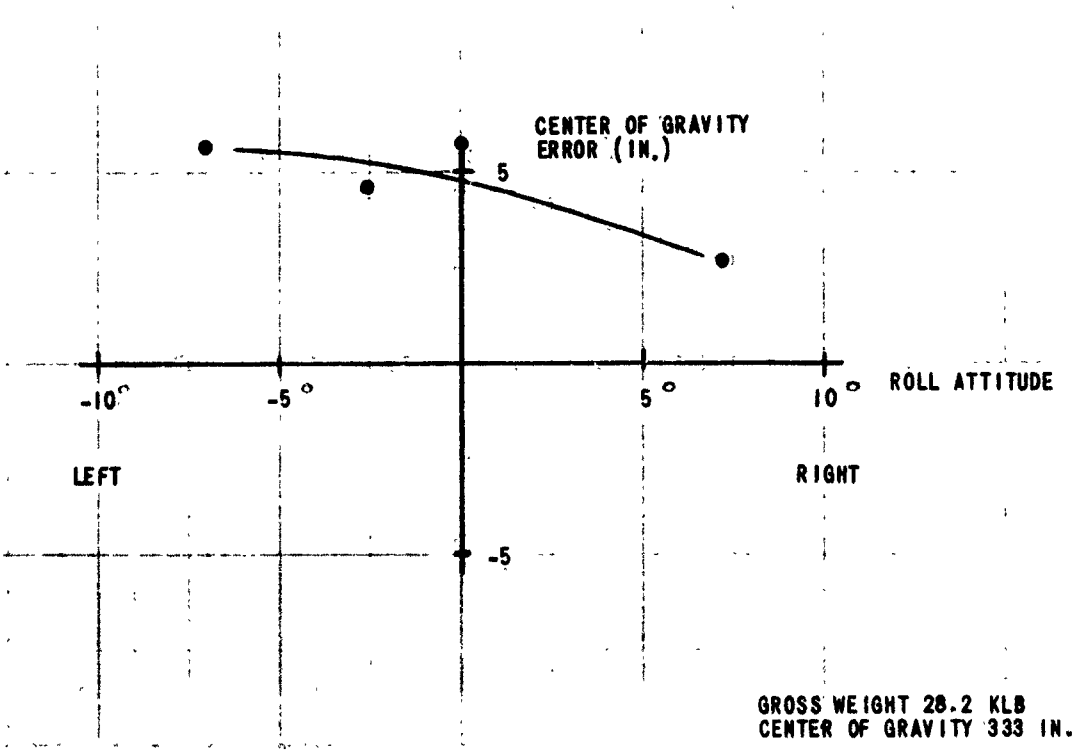

Figure 14. Center of Gravity Static Accuracy With Roll Attitude.

FORWARD ROTOR			
LOAD CELL LBS	WBS KLBS	ERROR LBS	% F.S.
500	0.5	0	0
1,490	1.5	10	.02
2,440	2.4	-40	-.1
3,480	3.4	-80	-.2
4,900	4.8	-100	-.25
5,910	5.8	-110	.3
7,540	7.5	-40	-.1
5,046	5.0	-40	-.1
2,585	2.5	-85	-.2
630	0.6	-30	-.07

AFT ROTOR			
LOAD CELL	WBS	ERROR LBS	% F.S.
900	0.9	0	0
1,555	1.5	55	.14
2,450	2.4	50	.12
3,480	3.4	80	.2
5,095	5.1	-5	0
6,025	6.0	25	.1
7,280	7.3	-20	-.1
5,075	5.2	-125	-.3
2,470	2.5	-30	-.1
790	0.8	-10	-.02

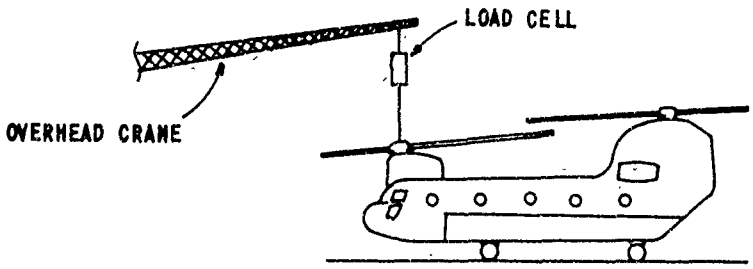

Figure 15. Rotor Sensors. Static Accuracy.

The temperatures shown in the rotor weight vs temperature curves are measured by a thermocouple installed adjacent to one of the four sensors located on the forward transmission cover and aft lift bearing housing. The temperatures were recorded for all dynamic test conditions and the rotor data corrected per Figure 16. The error shown at cold temperatures in the static configuration is caused by the contraction of the gas in the oleo strut and would normally not be seen as the aircraft is moved and the strut "unsticks".

On all dynamic tests the rotor lift forces showed large errors (up to 15,000 lb) even after a correction for temperature was applied. In all cases the rotor lift forces were low, indicating that the force applied statically with the overhead crane is not a realistic simulation of the lift forces produced by the rotary wing. The lifting forces were not uniformly low, however, and it must be concluded that the presence of extraneous forces in the dynamic condition is producing a distortion in the rotor structure which is significant relative to the deformation caused by the lifting force.

SUMMARY

It is clear from the work that has been done that the problem of accounting for rotor lift remains the primary impediment in the development of a dynamic weight and balance system. In the static mode, oleo strut pressure transducers provide a measurement of gear weight that is close to the desired accuracy. A static WBS is, in fact, a practical reality. Further, hook load is measured directly and accurately with the easily retrofitted load cell developed in this program. An accurate rotor lift measurement, however, remains an elusive goal.

Prior development programs have shown that lift cannot be predicted accurately on the basis of pitch settings and rotor RPM. It is also doubtful that torque is an accurate analog or lift. We are convinced that a direct measurement of lift is a requirement for any dynamic WBS and feel that rotor structural deformation is the only viable method of measuring lift.

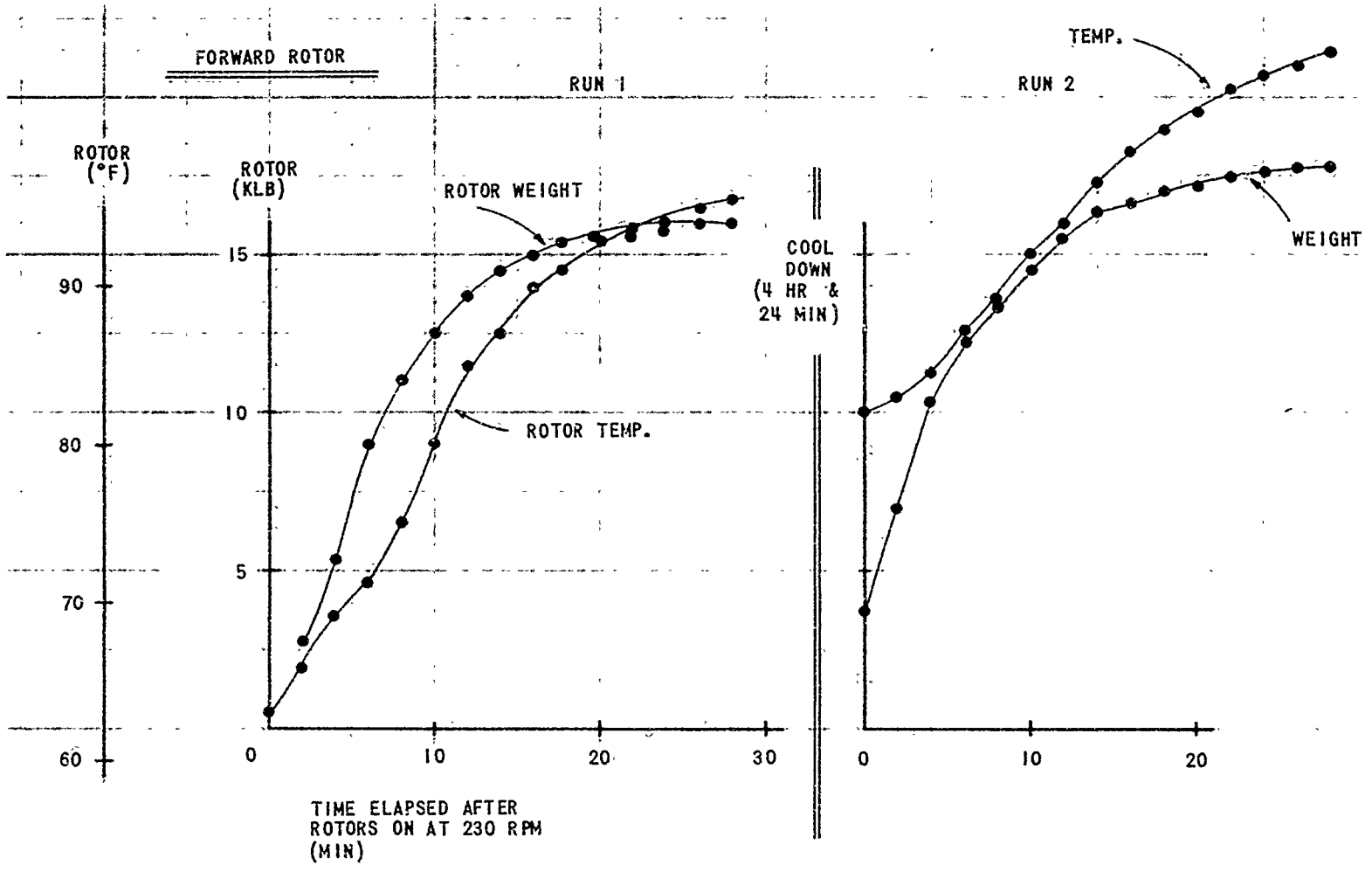

Figure 16. Indicated Forward Rotor Weight Vs Forward Transmission Cover Temperature.

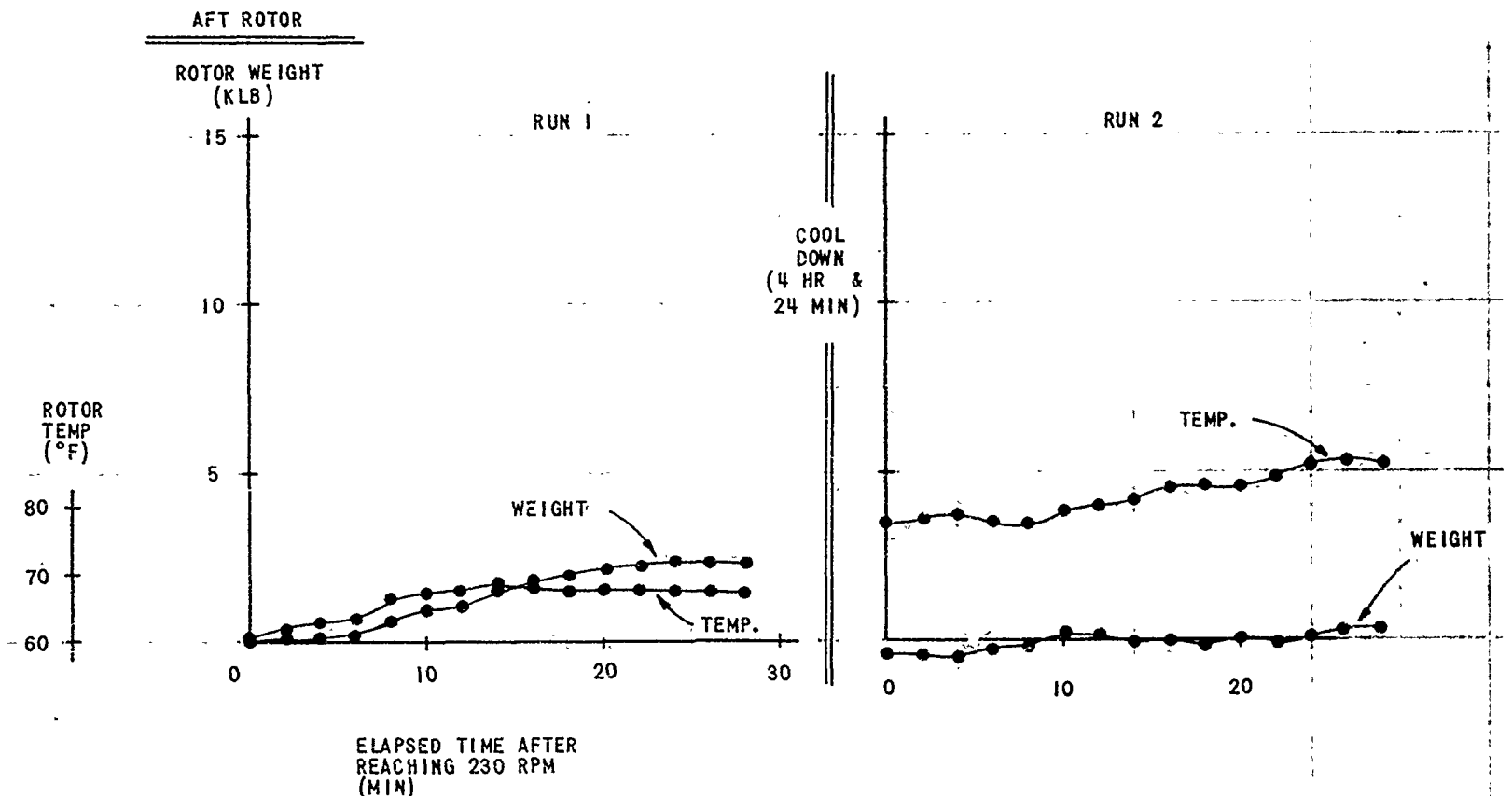

Figure 17. Indicated Aft Rotor Weight Vs Aft Transmission Cover Temperature.

The problem of rotor lift vs structural deflection is an extremely complex problem. Thermal effects of oil heat-up, centrifugal forces of the rotor in motion, and the interaction of the pitch links were all found to be significant sources of error and all are unable to be simulated realistically in the laboratory.

TABLE III. DYNAMIC ACCURACY. HELICOPTER ON THE GROUND WITH ROTOR AT 230 RPM AND STANDARD PITCH SETTINGS

SCALE		ON-BOARD SYSTEM							ERROR	
GROSS WEIGHT (KLB)	CENTER OF GRAVITY (IN.)	FWD LANDING GEAR (KLB)	AFT LANDING GEAR (KLB)	FWD ROTOR (KLB)	AFT ROTOR (KLB)	FWD ROTOR CORRECTED FOR TEMP. (KLB)	AFT ROTOR CORRECTED FOR TEMP. (KLB)	CENTER OF GRAVITY (IN.)	CORRECTED GROSS WEIGHT (KLB)	CORRECTED CENTER OF GRAVITY (KLB)
23.28	333.8	11.6	0	12.6	5.9	3.0	3.5	232	-5.6	-62
30.0	330.9	16.8	2.4	13.5	5.5	3.2	2.8	277	-14.8	-21
35.6	330	19.4	5.1	13.5	4.9	3.5	2.2	300	-5.4	-36
40.3	329.8	22.9	8.6	13.9	5.1	3.7	2.4	315	-2.7	-19
35.8	330.2	20.4	6.4	13.2	4.8	3.0	2.2	307	-3.8	-25
29.1	331.8	15.8	3.2	12.8	5.1	3.8	2.5	290	-3.8	-45
23.1	335	11.5	1.0	13.5	5.6	2.4	3.0	261	-5.2	-45

TABLE IV. DYNAMIC ACCURACY, UNLEVEL TERRAIN, 230 RPM, STANDARD PITCH SETTINGS

PITCH ATTITUDE	ROLL ATTITUDE	GROSS WEIGHT ERROR (KLB) [1]	CENTER OF GRAVITY (IN.) [1]
12° 50'	NOMINAL	-6.4	12
4° 40'	NOMINAL	-6.4	12
LEVEL	NOMINAL	-6.4	12
-4° 41'	NOMINAL	-6.4	12
-8° 9'	NOMINAL	-6.4	-57
NOMINAL	7° 4' R	-6.9	-4
NOMINAL	5° 26' R	-5.6	-19
NOMINAL	3° 45' L	-6.3	-14
NOMINAL	7° 30' L	-6.7	-10

[1] TEMPERATURE CORRECTIONS APPLIED.

GROSS WEIGHT 30K
CENTER OF GRAVITY 333.

TABLE V. HOOK LOAD ACCURACY

ACTUAL HOOK LOAD (LB)	INDICATED HOOK LOAD (KLB)	FLIGHT VELOCITY	ERROR % F.S.
6,040	6.1	HOVER	.3
6,040	5.9 - 6.0	20K	-.2, -.7
6,040	6.0	40K	-.2
6,040	6.0 - 6.1	60K	-.2. +.3
6,040	6.0 - 6.1	80K	-.2, +.3
6,040	5.9	100K	-.7
6,040	5.9 - 6.0	HOVER	-.2, .7
10,000	9.8	HOVER	-.1
10,000	9.7	20K	1.5
10,000	9.8	40K	1.0
10,000	9.8	60K	1.0
15,000	14.8	HOVER	1.0

NOTE: VARIATIONS IN INDICATED LOAD READINGS CAUSED BY SWINGING

TABLE VI. Flight Mode Accuracy

ALTITUDE AND FORWARD VELOCITY	GROSS WEIGHT ERROR (KLB)	CENTER OF GRAVITY ERROR (IN.)
10' HOVER	-18.8	49
50' HOVER	-15.9	57
3,000', 20 KNOTS	-5.8	25
3,000', 40 KNOTS	-4.2	7
3,000', 60 KNOTS	-4.1	7
3,000', 80 KNOTS	-4.0	17
3,000', 100 KNOTS	-5.3	31
3,000', 115 KNOTS	-6.0	30

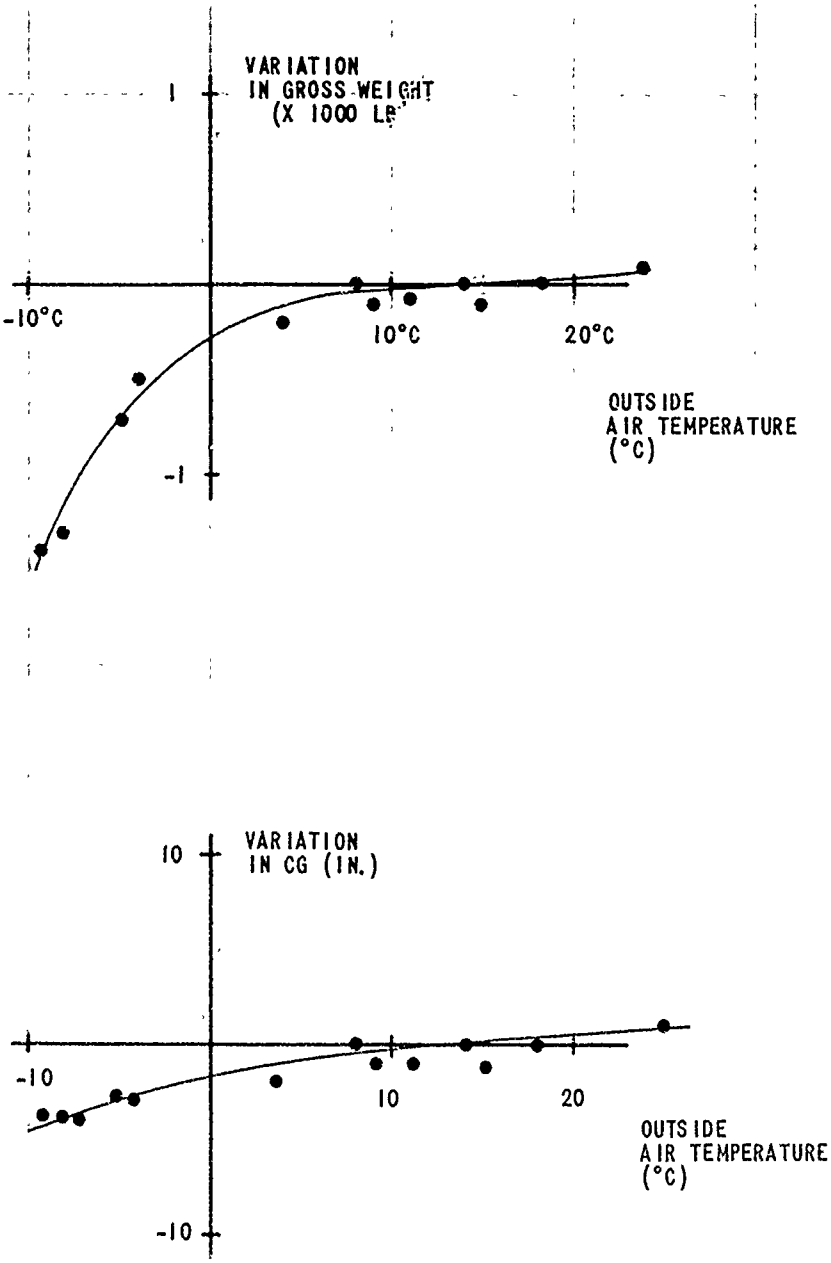

Figure 18. Variation in Gross Weight and CG With Temperature.

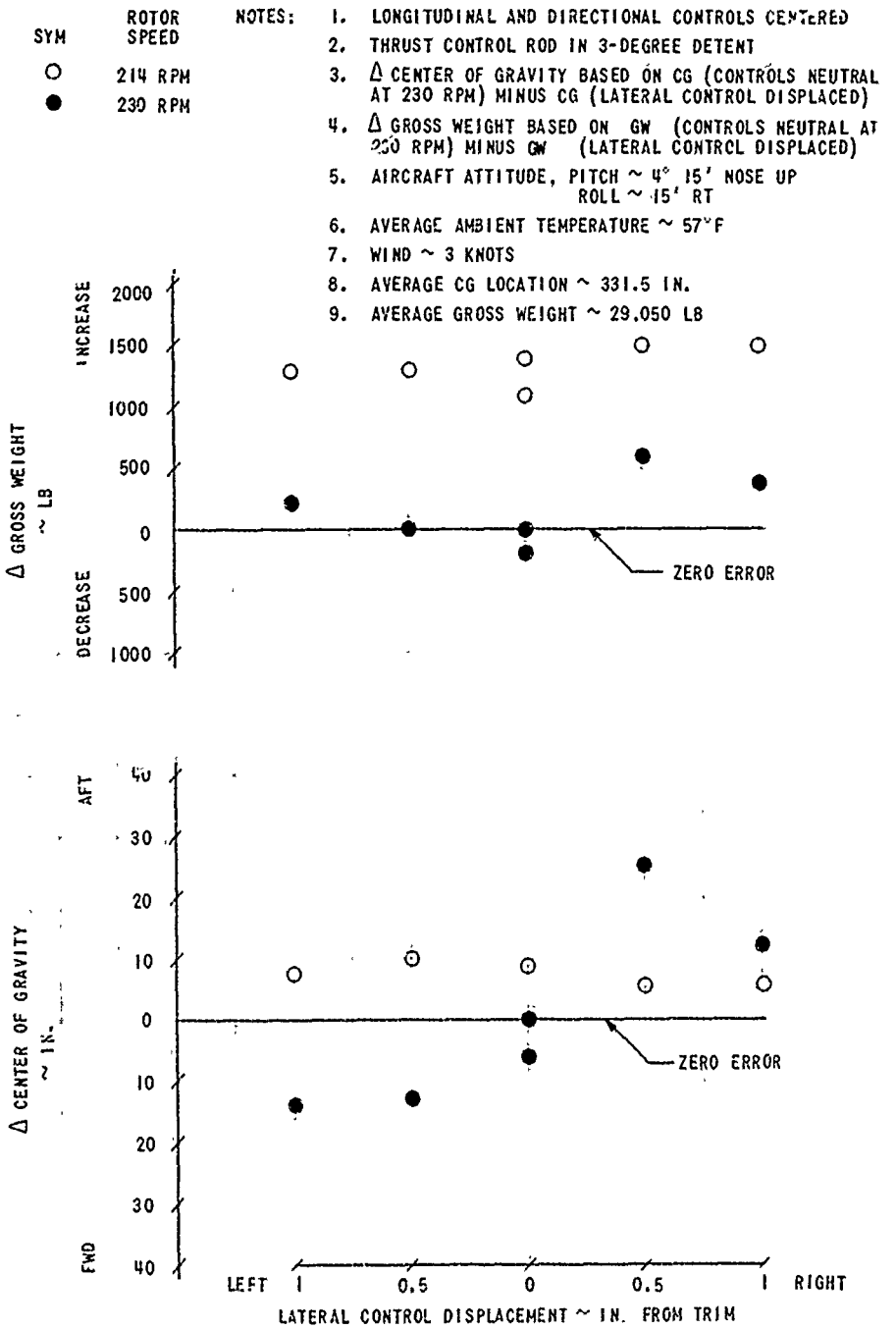

Figure 19. Effects of Lateral Control Displacement on Indicated Gross Weight and Center of Gravity.

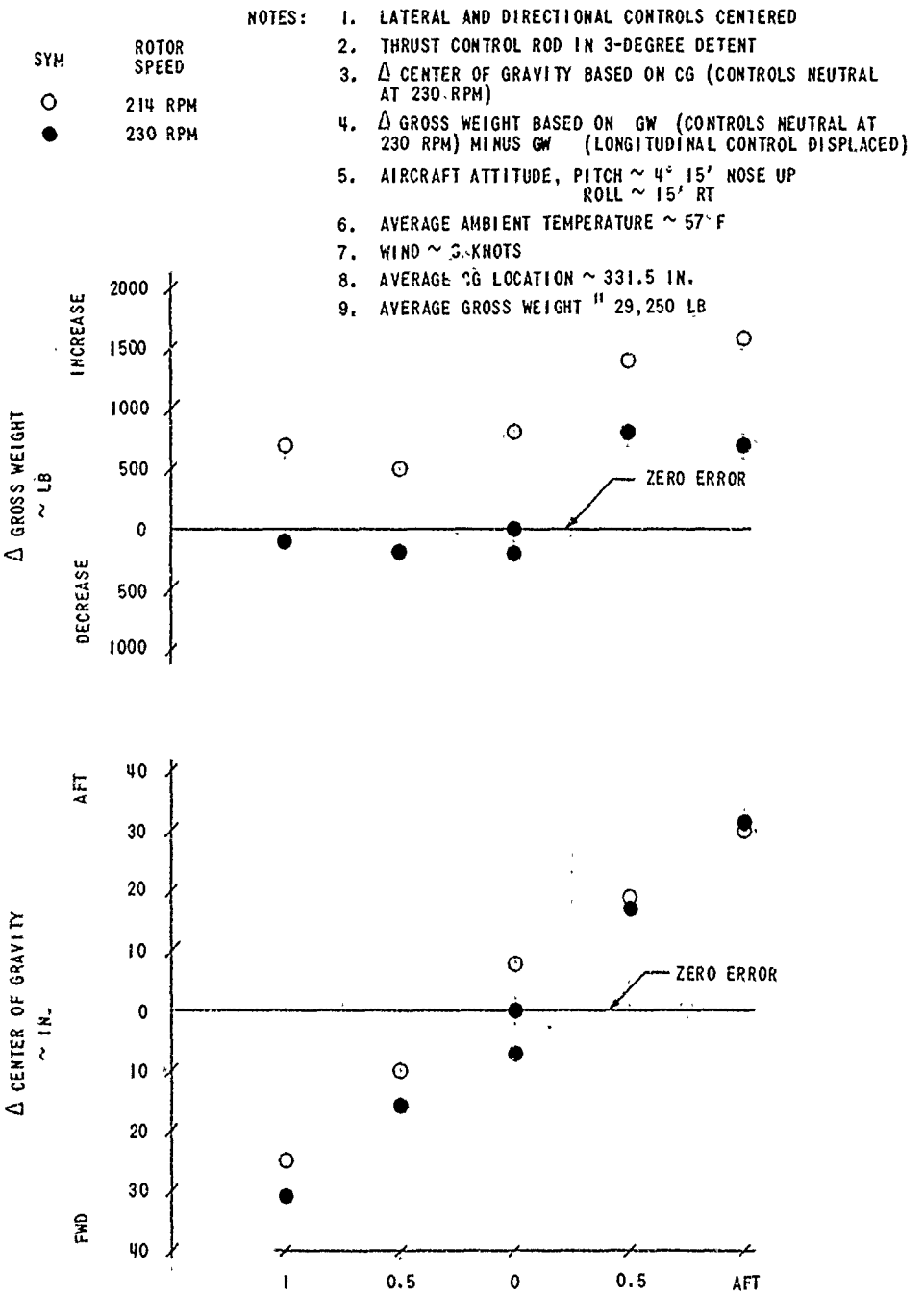

Figure 20. Effects of Longitudinal Control Displacement on Indicated Gross Weight and Center of Gravity.

CONCLUSIONS

1. The optimum static accuracy with level terrain, well serviced oleo struts, and in-place calibration is within 1% full scale for gross weight and 2.5 inches for center gravity.

2. With rotors in motion, the rotor lift sensors show large errors which are attributed to deformation of the rotor structure produced by extraneous forces.

3. The static accuracy of the system is of a magnitude which would appear to make it a useful tool for rotors-off usage.

4. The dynamic characteristics of the system make it unsuitable at present for measuring gross weight and CG with rotors in motion.

5. Accuracies within ±0.5% can be achieved with the cargo hook cell used with this system.

RECOMMENDATION

It is recommended that further work concentrate on the measurement, analysis and correlation of survey stresses and temperature, on a rotor transmission test stand, or flight test helicopter. A sufficient quantity of basic measurements, e.g., up to 100 channels or more, should be made to characterize the behavior of the structure under actual operating conditions. The data should be analyzed in a special computer program designed for the purpose. The program would compare each parameter (and combinations) with vertical force to determine if, under dynamic conditions, the stress at any one point is proportional to vertical lift only. A refinement would correct the force for temperature, or temperature gradients, as measured by sets of thermocouples. Practical considerations such as transducer and wiring design can be discounted until a suitable combination of stresses and temperatures is found.

APPENDIX I
ANALYSIS OF AFT GEAR REACTIONS

LET,

W = WEIGHT ON GEAR

W_D = DRAG LOAD

R = REACTIONS AS SHOWN

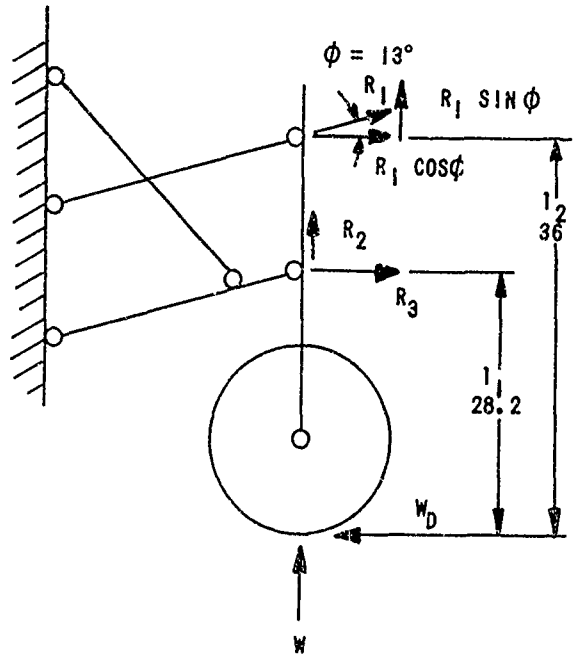

SUMMING FORCES,

$$R_1 \cos\phi + R_3 - W_D = 0$$

$$-R_1 \sin\phi - R_2 - W = 0$$

$$R_1 \cos\phi\, l_2 + R_3 l_1 = 0$$

AND,

$$.97\, R_1 + 0R_2 + R_3 = W_D$$

$$-.22 R_1 - R_2 + 0R_3 = W$$

$$-35 R_1 + 0R_2 + 28 l_1 = 0$$

SOLUTIONS TO THE EQUATION (FROM THE COMPUTER PRINTOUT) SHOW:

$$R_2 = W - .1\, W_D$$

$$R_3 = .56\, W_D$$

APPLYING THESE RELATIONSHIPS FOR R_2 AND R_3 TO A MODEL OF THE STRUT ALONE;

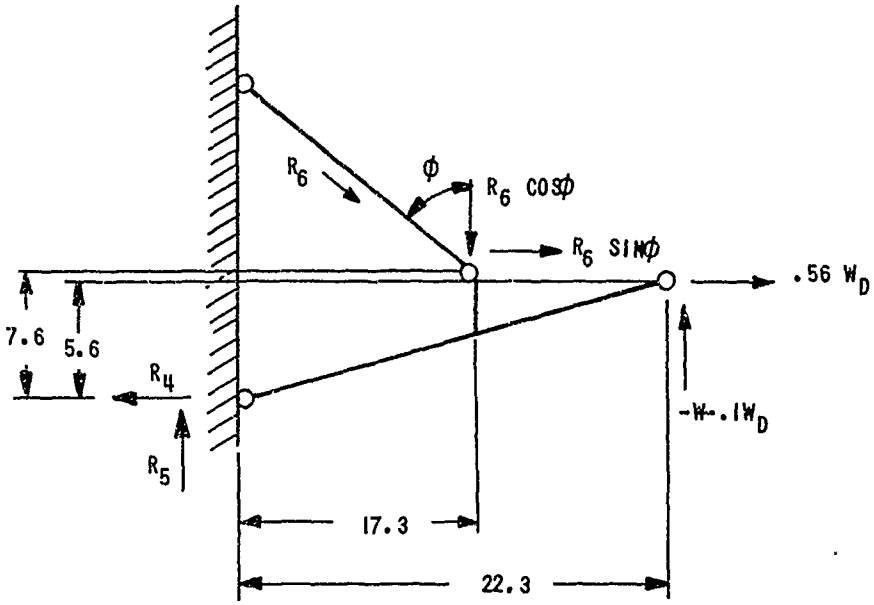

SUMMING FORCES;

$$-R_4 \qquad +R_6 \sin\phi + .56\ W_D = 0$$

$$-R_5 \quad +R_6 \cos\phi - (-W-.1W_D) = 0$$

$$+17.3\ R_6 \cos\phi + 7.6\ R_6 \sin\phi \quad .56 \times 5.6 \times W_D - (-W-.1W_D)\ 22.3 = 0$$

WITH;
$W = 1000$
$R_6 = 1205$

WITH;
$W = 1000$
$W_D = 100$
$R_6 = 1200$

CONCLUSION:

1) UPPER LINK CARRIES NO VERTICAL LOAD.
2) OLEO REACTION IS 1.2 X VERTICAL LOAD.
3) OLEO REACTION INCREASES LESS THAN 0.5% IN THE PRESENCE OF 10% DRAG LOAD (I.E., SHOWS GOOD DRAG INSENSITIVITY).

```
***GJESAE      09:44      02/10/72

SOLUTION OF SIMULTANEOUS ALGEBRAIC EQUATIONS
  #01-1995; VERSION 1
DETAILS(YES OR NO)?NO
TYPE 0 IF YOU INPUT DATA AT THE TERMINAL, 1 IF FROM FILES
COEMA AND CONMA.?0
# OF ROWS IN THE COEFFICIENT MATRIX?3
ENTER MATRIX BY ROW CONTINUOUSLY.?-1,0,.57,0,-1,.82,0,0,18.5
# OF COLUMNS IN THE CONSTANT MATRIX?1
ENTER MATRIX BY ROW CONTINUOUSLY.?0,1000,22300
SOLUTION IN COLUMNS, IF MORE THAN ONE LINE FOR EACH VARIABLE
IT CONTINUES AT THE IMMEDIATE NEXT LINE.
 687.081   (Rv)

-11.5676   (Rs)

 1205.41   (Rb)

DO YOU WISH TO SOLVE ANOTHER PROBLEM?YES
TYPE 0 IF YOU INPUT DATA AT THE TERMINAL, 1 IF FROM FILES
COEMA AND CONMA.?0
# OF ROWS IN THE COEFFICIENT MATRIX?3
ENTER MATRIX BY ROW CONTINUOUSLY.?-1,0,.57,0,-1,.82,0,0,18.5
# OF COLUMNS IN THE CONSTANT MATRIX?1
ENTER MATRIX BY ROW CONTINUOUSLY.?-56,1010,22210
SOLUTION IN COLUMNS, IF MORE THAN ONE LINE FOR EACH VARIABLE
IT CONTINUES AT THE IMMEDIATE NEXT LINE.
 740.308

-25.5563

 1200.54

DO YOU WISH TO SOLVE ANOTHER PROBLEM?NO

NOW AT END
```

```
***GJESAE      08:59      02/10/72

SOLUTION OF SIMULTANEOUS ALGEBRAIC EQUATIONS
  #01-1995; VERSION 1
DETAILS(YES OR NO)?NO
TYPE 0 IF YOU INPUT DATA AT THE TERMINAL, 1 IF FROM FILES
COEMA AND CONMA.?0
# OF ROWS IN THE COEFFICIENT MATRIX?3
ENTER MATRIX BY ROW CONTINUOUSLY.?.97,0,1,-.22,-1,0,-35,0,28
# OF COLUMNS IN THE CONSTANT MATRIX?1
ENTER MATRIX BY ROW CONTINUOUSLY.?0,1000,0
SOLUTION IN COLUMNS, IF MORE THAN ONE LINE FOR EACH VARIABLE
IT CONTINUES AT THE IMMEDIATE NEXT LINE.
 0

-1000

 0

DO YOU WISH TO SOLVE ANOTHER PROBLEM?YES
TYPE 0 IF YOU INPUT DATA AT THE TERMINAL, 1 IF FROM FILES
COEMA AND CONMA.?0
# OF ROWS IN THE COEFFICIENT MATRIX?3
ENTER MATRIX BY ROW CONTINUOUSLY.?.97,0,1,-.22,-1,0,-35,0,28
# OF COLUMNS IN THE CONSTANT MATRIX?1
ENTER MATRIX BY ROW CONTINUOUSLY.?1000,0,0
SOLUTION IN COLUMNS, IF MORE THAN ONE LINE FOR EACH VARIABLE
IT CONTINUES AT THE IMMEDIATE NEXT LINE.
 450.45

-99.0991

 563.063

DO YOU WISH TO SOLVE ANOTHER PROBLEM?NO

NOW AT END
```

APPENDIX II
DRAWING LIST CH-47

Block Diagram, System	BD2-684
Kit Drawing, FWD Gear	KIT 2-684100
Kit Drawing, AFT Gear	KIT 2-684200
Kit Drawing, FWD Rotor	KIT 2-684300
Kit Drawing, AFT Rotor	KIT 2-684400
Outline Drawing, Cargo Hook	1
Outline Drawing, Attitude Sensor	OD 2-684510
Schematic, Attitude Sensor	S2-684510

Block Diagram, System	2-684-01
Kit Drawing, FWD Gear	2-684100-01
Elbow, 90°	2-684110-01
Tee, Fluid Connection	2-684120-01
Bracket, Transducer Mount	2-684130-01
Kit, AFT Gear	2-684300-01
Elbow, 135°	2-684310-01
Nut, Tube Fitting	2-684220-01
Bracket, Transducer Mount	2-684130-02
Kit, FWD Rotor	2-684300-01
Gage Assembly	2-684310-01
Frame	2-684311-01
Cover, Molded	2-684320-01
Cover	2-684321-01
Strap, Mounting	2-684340-01
Plate, Mounting	2-684350-01
Junction Box	2-684610-01
Junction Box	2-684610-02
Cover	2-684620-01
Gasket	2-684630-01
Boss	2-684640-01
Seal, Plug	2-684650-01
Seal, Plug	2-684650-02
Seal, Plug	2-684650-03
Washer	2-684660-01
"Y" Assembly	2-684670-01
"Y" Conduit Coupling	2-684671-01
Coupling	2-684672-01

Kit, AFT Rotor	2-684400-01
Gage Assembly	2-684310-01
Frame	2-684311-01
Cover, Molded	2-684320-02
Cover	2-684321-02
Cable Assembly	2-684330-02
Plate, Gage Cover	2-684410-01
Wire Rope Assembly	2-684420-01
Junction Box	2-684610-01
Junction Box	2-684610-02
Cover	2-684620-01
Gasket	2-684630-01
Boss	2-684640-01
Seal, Plug	2-684650-01
Seal, Plug	2-684650-02
Seal, Plug	2-684650-03
Washer	2-684660-01
"Y" Assembly	2-684670-01
"Y" Conduit Coupling	2-684671-01
Coupling	2-684672-01
Plate, Mounting	2-684680-01
Plate	2-684680-02
Bracket, Mounting	2-684690-01
Bracket	2-684690-02
Bracket, Mounting	2-684690-03
Bracket	2-684690-04

APPENDIX III

DEFINITION OF OPERATING RANGE OF WEIGHTS ON CH-47 LANDING GEARS

Empty Weight: 19,264 Pounds

Moment (Empty): 6753.6

CG Location = 6753.6/19264 x 1,000 - 350 Inches

$M = 245\ R_1 + 515\ R_2$

where R_1 = Total Forward Reaction

R_2 = Total Aft Reaction

Using the relationship,

$R_1 + R_2 = W$ = Total Weight

Minimum Weight on Aft Gear:

$\frac{R_2}{2}$ = 3769 Pounds

Minimum Weight on Forward Gear:

$\frac{R_1}{2}$ = 5867 Pounds

Maximum Weight on Aft Gear @ 33,000 Pounds, 338 In.: 5683 Pounds

Maximum Weight on Fwd Gear @ 33,000 Pounds, 309 In.: 10816 Pounds

APPENDIX IV
DERIVATION OF EQUATIONS FOR LABORATORY DATA ANALYSIS

The derivation of system accuracy based on the test performance data for the individual WBS components is reasoned as follows:

In the static mode (i.e., rotors not turning) the system error is an accumulation of the errors in each landing gear. Assuming that the errors are statistically independent and random, the system error will be the root-sum-squared (RSS) value of the individual errors.

For example, in the static mode, the landing gear errors result from nonrepeatability, nonlinearity, and hysteresis. The test results show that the maximum errors for the forward gear and aft gear are ± 160 pounds and ± 300 pounds, respectively, and the RSS value is

$$\begin{aligned} \text{RSS Error} &= (160)^2 + (160)^2 + (300)^2 + (300)^2 \\ &= 2.56 \times 10^4 + 2.56 \times 10^4 + 9 \times 10^4 + 9 \times 10^4 \\ &= 472 \text{ Pounds} \\ &= \frac{472}{33{,}000} \times 100\% - 1.4\% \end{aligned}$$

Similarly, to arrive at the dynamic accuracy, the rotor transducer errors are added to the above expression.

To derive the center of gravity error, the CG error which corresponds to each weight error is determined from the results in Appendix V. The net CG error is then determined by the RSS value.

In the above example, we know that each forward gear reaction error of 100 pounds causes a CG error of .3 inch, and each aft gear error causes a CG change of .6 inch per 100 pounds. The total CG error is

$$\begin{aligned} \text{RSS CG Error} &= 2(160 \times .003)^2 + 2(300 \times .006)^2 \\ &= 2.6 \text{ Inch} \end{aligned}$$

APPENDIX V
ANALYSIS OF THE EFFECT OF INDIVIDUAL LANDING GEAR REACTION AND ROTOR LIFT ERRORS ON INDICATED CENTER OF GRAVITY

The equation for calculating the center of garavity location for a CH-47 helicopter in terms of landing gear reactions and rotor lift can be written

$$l_{cg} = 245R, +87T, +550T_2 + 515R_2/W$$

where

R_1 = fwd reaction

R_2 = aft reaction

T_1 = fwd rotor lift

T_2 = aft rotor lift

W = gross weight

and

the constants shown are the fuselage stations (inches) of the reaction points.

Differentiating the equation with respect to one reaction, say, R_1

$$dl_{cg}/dR_1 = \frac{W245 - (245R_1 + 87T_1 + 550T_2 + 515R_2}{W_2}$$

That is, the change in CG location for a change (i.e., error) in the reaction R_1 is dependent on W and l_{cg}.

Assume

$W = 33,000$	$T_1 = 1500$
$R_1 = 20,000$	$T_2 = 1500$
$R_2 = 10,000$	$(l_{cg} = 333.5)$

then

$$dl_{cg}/dR_1 = .003$$

That is, the change in the center of gravity location for a 100-pound error in the forward gear reaction is 0.3 inch.

Similarly,

$$dl_{cg}/dT_1 = .7$$

$$dl_{ct}/dT_2 = -.7$$

$$Dl_{cg}/dR_2 = -.6$$

APPENDIX VI
DRAWING LIST, UH-1

Block Diagram, System	BD2-685
Kit Drawing, Landing Skid & Rotor	KIT 2-685100
Outline Drawing, Attitude Sensor	OD 2-684510
Schematic, Attitude Sensor	S2-684510
Block Diagram, System	2-685-01
Kit, Forward Cross Tube	2-685100-01
Gage Assembly	2-685110-01
Frame	2-685111-01
Cover, Molded	2-685120-01
Cover	2-684321-01
Cable Assembly	2-685130-01
Boss	2-684640-01
Seal, Plug	2-684650-01
Washer	2-685660-01
Kit, Aft Cross Tube	2-685100-02
Gage Assembly	2-685110-02
Frame	2-685111-02
Cover, Molded	2-685120-02
Cover	2-684321-01
Cable Assembly	2-685130-02
Boss	2-684640-01
Seal, Plug	2-684650-01
Washer	2-684660-01
Kit, Rotor Housing	2-685100-03
Gage Assembly	2-685110-03
Frame	2-685111-03
Cover, Molded	2-685120-03
Cover	2-684321-01
Cable Assembly	2-685130-03
Boss	2-684640-01
Seal, Plug	2-684650-04
Washer	2-684660-01