AD-768 842

HLH GROUND SUPPORT EQUIPMENT (GSE) PRELIMINARY INVESTIGATION

John M. Corso, et al

Boeing Vertol Company

Prepared for:

Army Air Mobility Research and Development Company

June 1973

DISTRIBUTED BY:

NTIS

National Technical Information Service
U. S. DEPARTMENT OF COMMERCE
5285 Port Royal Road, Springfield Va. 22151

DISCLAIMERS

The findings in this report are not to be construed as an official Department of the Army position unless so designated by other authorized documents.

When Government drawings, specifications, or other data are used for any purpose other than in connection with a definitely related Government procurement operation, the United States Government thereby incurs no responsibility nor any obligation whatsoever; and the fact that the Government may have formulated, furnished, or in any way supplied the said drawings, specifications, or other data is not to be regarded by implication or otherwise as in any manner licensing the holder or any other person or corporation, or conveying any rights or permission, to manufacture, use, or sell any patented invention that may in any way be related thereto.

Trade names cited in this report do not constitute an official endorsement or approval of the use of such commercial hardware or software.

DISPOSITION INSTRUCTIONS

Destroy this report when no longer needed. Do not return it to the originator.

ACCESSION for
NTIS White Section ☑
DDC Buff Section ☐
UNANNOUNCED ☐
JUSTIFICATION .....
.....
BY .....
DISTRIBUTION/AVAILABILITY CODES
Dist. AVAIL. and/or SPECIAL
A

UNCLASSIFIED
Security Classification

AD 768842

DOCUMENT CONTROL DATA - R & D

(Security classification of title, body of abstract and indexing annotation must be entered when the overall report is classified)

1. ORIGINATING ACTIVITY *(Corporate author)* Boeing Vertol Company P.O. Box 16858 Philadelphia, Penna.,	2a. REPORT SECURITY CLASSIFICATION Unclassified 2b. GROUP

3. REPORT TITLE

HLH GROUND SUPPORT EQUIPMENT (GSE)
PRELIMINARY INVESTIGATION

4. DESCRIPTIVE NOTES *(Type of report and inclusive dates)*

FINAL REPORT MARCH 1972 - MAY 1973

5. AUTHOR(S) *(First name, middle initial, last name)*

John M. Corso
Thomas S. Hammer
Frank J. Kozloski

6. REPORT DATE June 1973	7a. TOTAL NO. OF PAGES ~~123~~ 125	7b. NO. OF REFS 8
8a. CONTRACT OR GRANT NO. Contract DAAJ02-72-C-0041 b. PROJECT NO. c. Task 1F162203A43401 d.	9a. ORIGINATOR'S REPORT NUMBER(S) USAAMRDL Technical Report 73-52 9b. OTHER REPORT NO(S) *(Any other numbers that may be assigned this report)* D301-10188-1	

10. DISTRIBUTION STATEMENT

Approved for public release; distribution unlimited.

11. SUPPLEMENTARY NOTES	12. SPONSORING MILITARY ACTIVITY Eustis Directorate, U.S. Army Air Mobility R&D Laboratory Fort Eustis, Virginia

13. ABSTRACT

This preliminary study was conducted to determine the GSE required for the heavy-lift helicopter (HLH) early enough in the program to allow ample time for development/procurement of long lead time items. The HLH aircraft systems were analyzed during the preliminary design stage to establish maintenance concepts, identify the necessary organizational and direct support level tasks, and select equipment suitable for performing the tasks identified.

The selected equipment was classified as existing as-is, existing requiring modification, or not available and requiring new design and development effort. The elapsed maintenance time and the number of personnel required to perform organizational and direct support level tasks in the Army aviation environment were determined. In some instances, several alternate approaches for GSE were identified which will require trade-offs to complete the equipment selection process.

It is concluded that the technology is in hand for the GSE required for the HLH subsystems included in this study. Advancement of GSE state of the art is not required. However, further analysis should be conducted early in the design development to permit selection of the appropriate design course at a time when hardware cost and impact can be minimized.

DD FORM 1 NOV 65 1473 REPLACES DD FORM 1473, 1 JAN 64, WHICH IS OBSOLETE

Reproduced by
NATIONAL TECHNICAL INFORMATION SERVICE
U S Department of Commerce
Springfield VA 22151

UNCLASSIFIED
Security Classification

UNCLASSIFIED

Security Classification

14. KEY WORDS	LINK A ROLE	LINK A WT	LINK B ROLE	LINK B WT	LINK C ROLE	LINK C WT
Ground support equipment						
Requirements and characteristics						
Analysis and Assessment						
Maintenance Downtime						
Personnel Requirements						
Alternate Approaches						
Trade-offs						
Related Equipment						

UNCLASSIFIED

Security Classification

7096-73

DEPARTMENT OF THE ARMY
U. S. ARMY AIR MOBILITY RESEARCH & DEVELOPMENT LABORATORY
EUSTIS DIRECTORATE
FORT EUSTIS, VIRGINIA 23604

This report was prepared by the Boeing Vertol Company under the terms of Contract DAAJ02-72-C-0041. The intent of this program was to determine preliminary ground support equipment (GSE) requirements for the heavy lift helicopter (HLH) early enough in the aircraft development program to identify the GSE required for the operational evaluation and testing of the aircraft.

The HLH aircraft system was defined in January 1972, and the design has progressed through various configurations and changes. Accordingly, to meet the completion date of this preliminary study, the configuration detailed in HLH drawing number 301-10004D, Revision D, and drawing number 301-10006, Revision C, was established as the basic design. Avionics, instruments, flight control, and power management systems were excluded because of their limited definition at this time. The HLH aircraft systems were analyzed to establish maintenance concepts, servicing, and support tasks. GSE for existing advanced technology components (rotor head, upper controls, rotor blade, transmissions, shafting, and cargo handling) was included where appropriate.

This study selected equipment that was classified either as existing as-is or as not available and requiring new design and development effort. One hundred four requirements were identified, with the resultant selection of 38 existing as-is equipment items and 66 equipment items requiring design and development effort. Furthermore, this preliminary study indicates that the technology is in hand for the GSE required.

The finalized design configurations of the HLH should provide the basis for a reexamination and study of GSE requirements. A thorough analytical evaluation or trade-off study of alternate GSE approaches to assure selection of the most cost-effective HLH GSE should be undertaken at that time.

Mr. S. G. Riggs, Jr., Military Operations Technology Division, served as Project Engineer for this effort.

Task 1F162203A43401
Contract DAAJ02-72-C-0041
USAAMRDL Technical Report 73-52
June 1973

HLH GROUND SUPPORT EQUIPMENT (GSE) PRELIMINARY INVESTIGATION

Final Report

D301-10188-1

By

J. M. Corso
T. S. Hammer
F. J. Kozloski

Prepared by

The Boeing Vertol Company
Philadelphia, Pennsylvania

for

EUSTIS DIRECTORATE
U. S. ARMY AIR MOBILITY RESEARCH AND DEVELOPMENT LABORATORY
FORT EUSTIS, VIRGINIA

Approved for public release;
distribution unlimited.

SUMMARY

Late definition of GSE requirements and the long lead time required to procure certain items of GSE for a weapon system cause delays in test and evaluation programs as well as operational delays and ultimately result in increased total system costs.

The purpose of this preliminary study was to determine the GSE required for the heavy-lift helicopter (HLH) early enough in the program to allow ample time for development/procurement of long lead time items. This was accomplished by analyzing the HLH aircraft systems during the preliminary design stage to establish maintenance concepts, identify the necessary organizational and direct support level tasks, and select equipment suitable for performing the tasks identified.

The selected equipment was classified either existing as-is, or not available and requiring new design and development effort. One hundred and four firm requirements were identified with the resultant selection of 38 existing as-is equipment items and 66 equipment items requiring new design and development effort.

The objectives of the investigation were achieved in that the personnel, elapsed maintenance time and equipment required to support the HLH in the Army aviation environment were determined. Furthermore, this study indicates that the technology is in hand for the GSE required for the HLH subsystems evaluated.

Although a specific item of equipment was selected as suitable for each of the requirements established, it was recognized that some items may be affected by future design changes and that in some cases alternate approaches may be practical. Those alternatives which have a potential impact on the HLH aircraft design have been identified. Because of this early determination of GSE requirements, sufficient lead time remains to consider design changes and to perform trade studies of the alternate approaches without adversely affecting test, evaluation, and operation of the weapon system.

TABLE OF CONTENTS

	Page
SUMMARY	iii
LIST OF ILLUSTRATIONS	vii
LIST OF TABLES	viii
INTRODUCTION	1
OBJECTIVES	2
APPROACH	3
METHODS USED	12
Design Reviews	12
Maintenance Engineering Analyses	12
GSE Inventory Analyses	13
Related Activities	15
Documentation	15
RESULTS	25
GSE Requirements Identified	25
GSE Inventory Analysis	26
Elapsed Maintenance Downtime and Personnel Requirements	26
GSE Requirements per Operating Company	26
ALTERNATE APPROACHES TO GSE CONCEPTS	43
Hoisting Device	43
Blade Fold vs. Blade Removal	51
Torque Application	53
Use of Forklift Equipment Versus Overhead Lifting Devices	61
Blade Handling Concepts	62
Twin Rail Versus Flatbed Utility Trailer	67

Preceding page blank

Page

RELATED EQUIPMENT 70

Air-Sea Transportability 70
Shipping Containers 72

CONCLUSIONS AND RECOMMENDATIONS 74

APPENDIXES

I. GSE Requirements Index 76
II. HLH GSE Requirements/System Application Matrix 93
III. New Equipment Descriptions 95

DISTRIBUTION 115

LIST OF ILLUSTRATIONS

Figure		Page
1	General Arrangement, Heavy-Lift Helicopter Model 301	5
2	Model 301 Inboard Profile	7
3	Model 301 Inboard Profile Legend	11
4	Support Equipment Requirements and Characteristics	16
5	GSE Requirements Index	18
6	HLH GSE Requirements/System Application Matrix	19
7	GSE Inventory Analysis and Assessment	21
8	Equipment Modification Requirement and Cost	22
9	New Equipment Requirement and Cost	24
10	HLH Hoisting Device Concept	44
11	H-47 Maintenance Crane (Fuselage Mounted)	45
12	Pettibone Model 15 Multikrane	48
13	Pettibone Model 15 Multikrane (Principal Dimensions)	49
14	H-53 Maintenance Crane	50
15	Torque Multiplier	54
16	Hydraulic Torque Wrench	57
17	Mechanical Torque Wrench	58
18	Pneumatic Torque Wrench	59
19	Hydraulic/Pneumatic Torque Wrench	60

Figure		Page
20	Stanray Lift Truck	64
21	Trailer Mounted Scissors Lift	65
22	Twin Rail Transportation Trailer	68
23	HLH C-5A Compatibility Layout	71

LIST OF TABLES

Table		Page
I	Equipment Type/Functional Classification . .	25
II	HLH GSE,Existing As-Is	28
III	HLH GSE,New	30
IV	Elapsed Maintenance Downtime and Personnel Requirements	33
V	HLH GSE Requirements for a Single Nine Aircraft Company Deployed at Three Operational Sites	37

INTRODUCTION

The identification and analysis of ground support equipment (GSE) requirements for weapon systems have traditionally lagged the design and development of the weapon system itself. As a result, many aircraft became operational long before adequate GSE was available. This deficiency in overall weapons system planning in the past has resulted in a delay in acceptance of the weapon systems into the armed forces weapons system inventory and has impacted the total life-cycle costs through increased maintenance and spares and decreased aircraft availability.

In view of the foregoing, the need was recognized to identify the GSE required to support and maintain the heavy-lift helicopter (HLH) early enough to permit development where necessary and to assure availability of support equipment concurrent with test and evaluation of the weapon systems.

The results of this study are preliminary only and are subject to change as the design progresses and additional analyses are performed. The design of the HLH prototype will be monitored by the regularly assigned maintainability personnel. If the design has an impact on the GSE requirements identified in this study, the HLH product assurance manager will be notified so that an evaluation and corrective action can be taken.

OBJECTIVES

The objective of this study was to determine the ground support equipment required to support the heavy-lift helicopter in the Army aviation environment. Major areas of effort in achieving this objective were:

- Identify in terms of personnel and elapsed maintenance time the necessary maintenance (organizational and direct support), servicing, and support tasks to allow the HLH system to function in the Army operational environment.

- Identify the characteristics of equipment necessary to accomplish the tasks identified above.

- Identify existing equipment that is available to meet requirements peculiar to the HLH.

- Identify modifications necessary to permit existing equipment to meet HLH needs.

- Recommend design concepts to define equipment with those characteristics that cannot be provided by available equipment or modifications to existing equipment.

- Provide preliminary relative cost assessment information for the modified and new equipment identified above.

APPROACH

The heavy-lift helicopter (HLH) aircraft system as defined in the Prime Item Description Document (PIDD) S301-1000, dated January 1972, was the initial configuration for this study. As the design progressed through various stages, the study was updated to reflect the latest configuration; however, in order to meet the commitment dates of this study, it was necessary to establish a configuration cut-off date.

The General Arrangement Drawing 301-10004, Revision D, and In-board Profile Drawing 301-10006, Revision C, shown in Figures 1, 2 and 3 reflect the most recent aircraft configuration used for this study. All GSE requirements identified herein are based on that configuration.

Within the context of the Army's operational, logistical, and maintenance philosophies as identified in the "Material Needs" document, the HLH aircraft systems were analyzed to establish maintenance concepts and identify those maintenance, servicing and support tasks to be performed at organizational and direct support levels. The avionics, instruments, flight control, and power management systems were excluded because of the limited definition of those subsystems at this time. Ground support equipment for existing advanced technology components (rotor head, upper controls, rotor blades, transmission, shafting and cargo handling) was included as appropriate.

Maintenance engineering analyses were performed for organizational and direct support level tasks to identify maintenance requirements by level, elapsed maintenance time, personnel requirements, and ground support equipment requirements. Training and spare parts provisioning requirements were tentatively identified where such information was considered pertinent to the GSE identification and selection process.

Three different approaches for providing the maintenance support equipment were considered: (1) permanent on-board devices excluding built-in test equipment, (2) system equipment which is mounted on the aircraft at the time maintenance is required, and (3) ground based equipment items.

Common characteristics of each item of support equipment were identified. These characteristics, such as power required, capacity, speed, and sensitivity, apply regardless of the approach used. When applicable, the peculiar character-

istics of either on-board, aircraft mountable, or ground based equipment were identified. Peculiar characteristics were determined by consideration of weight, size, simplicity, cost, etc.

Following establishment of equipment characteristics, currently available military and/or commercial equipment was examined to identify:

- Equipment that is available, as-is, to meet the required characteristics of the HLH
- Modifications tc existing equipment that are required to meet the HLH needs
- Design concepts to define equipment with the characteristics that cannot be provided otherwise

After identification of the equipment, cost analyses were conducted to provide estimated recurring and nonrecurring costs of new and modified equipment.

Reproduced from best available copy.

MAJOR CHARACTERISTICS

ROTOR

DIAMETER (FT)	92.0
TIP SPEED (F.P.S.)	750.0
DISC LOADING (PSF) AT DGW	8.9
BLADE AREA (1 AT 153 SQ. FT.)	1224.0
GEOMETRIC SOLIDITY RATIO	.09226
GEOMETRIC DISC. AREA (2 AT 6647.6 SQ. FT)	13,295.0

PROPULSION

NUMBER OF ENGINES/TYPE (ALLISON) 501-M62 (3) TURBOSHAFT	
TRANSMISSION RATING (H.P.)	17,700
MAX. SINGLE ENGINE RATING (H.P.)	8,075
INTEGRAL FUEL CAPACITY (GAL)	3,092
INTEGRAL FUEL CAPACITY (LB)	20,100

WEIGHT (LB)

DESIGN GROSS WEIGHT, LF = 2.5	118,000
DESIGN PAYLOAD	45,000
DESIGN MISSION FUEL	11,080
FIXED USEFUL LOAD (INCLUDES 5 MAN CREW)	2,340
EMPTY WEIGHT	59,580
MAX. ALTERNATE GROSS WEIGHT, LF = 2.0	148,000

GROUND ANGLES (DEGREES)

TURNOVER (WT. EMPTY)	EXTENDED GROUND LINE	26
	NORMAL GROUND LINE	32
TIP BACK (WT. EMPTY)	EXTENDED GROUND LINE	20
	NORMAL GROUND LINE	25

CONTROL MOVEMENTS

	FORWARD	AFT
COLLECTIVE PITCH	-1.5° TO 18.0°	-1.0° TO 16.5°
DIFFERENTIAL COLLECTIVE PITCH	±5.0°	±3.5°
LONGITUDINAL CYCLIC PITCH	-6.5° TO 12.0°	-8.4° TO 10.0°
DIFFERENTIAL LATERAL CYCLIC PITCH	±13.2°	±12.1°
LATERAL CYCLIC PITCH	±7.3°	±6.5°

LANDING GEAR

NOSE-WHEEL/TIRE SIZE	14 PLY RATING	15.50-20 TYPE III
MAIN-WHEEL/TIRE SIZE	14 PLY RATING	15.50-20 TYPE III

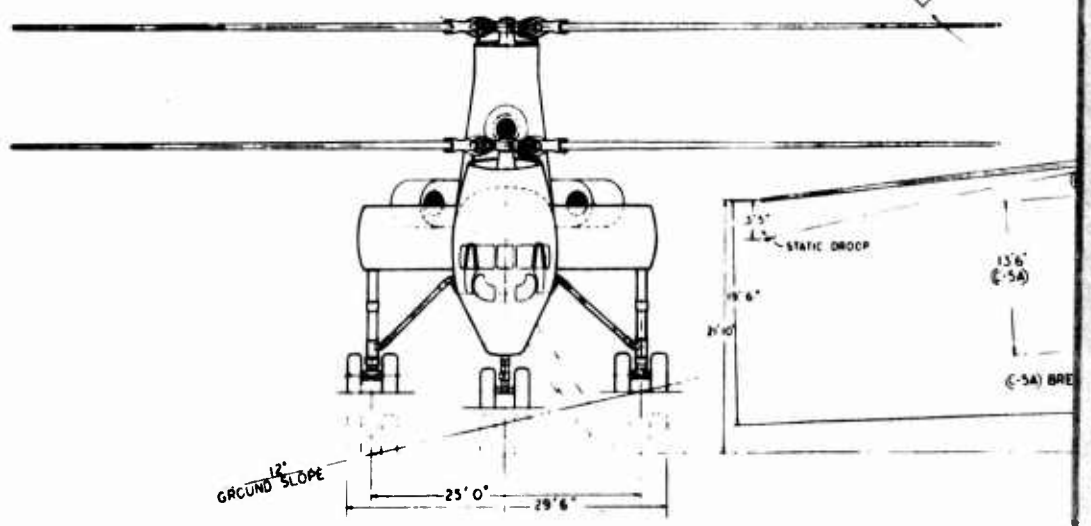

Figure 1. General Arrangement, Heavy-Lift Helicopter Model 301.

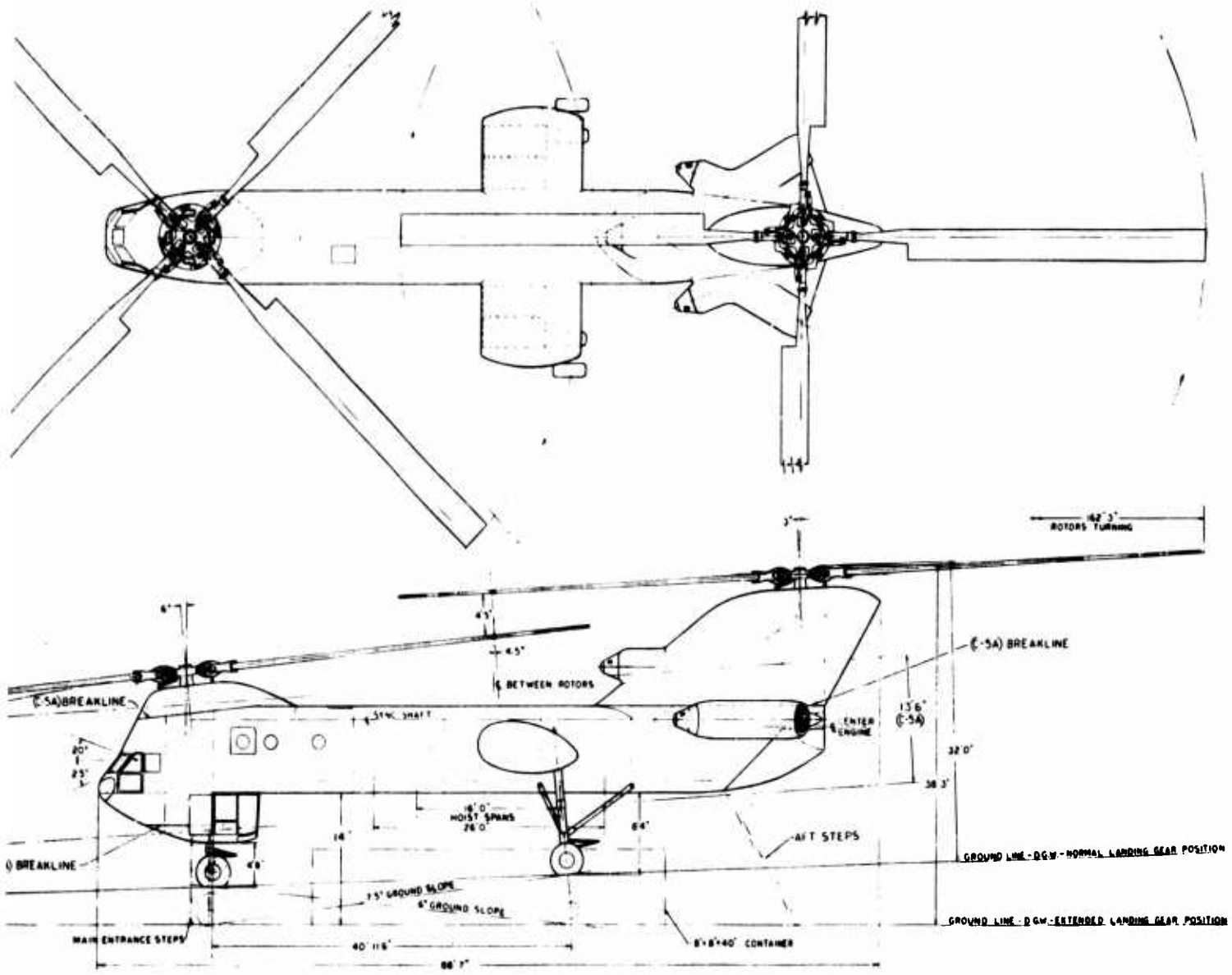

GENERAL ARRANGEMENT – MODEL 301 – HLH

Reproduced from best available copy.

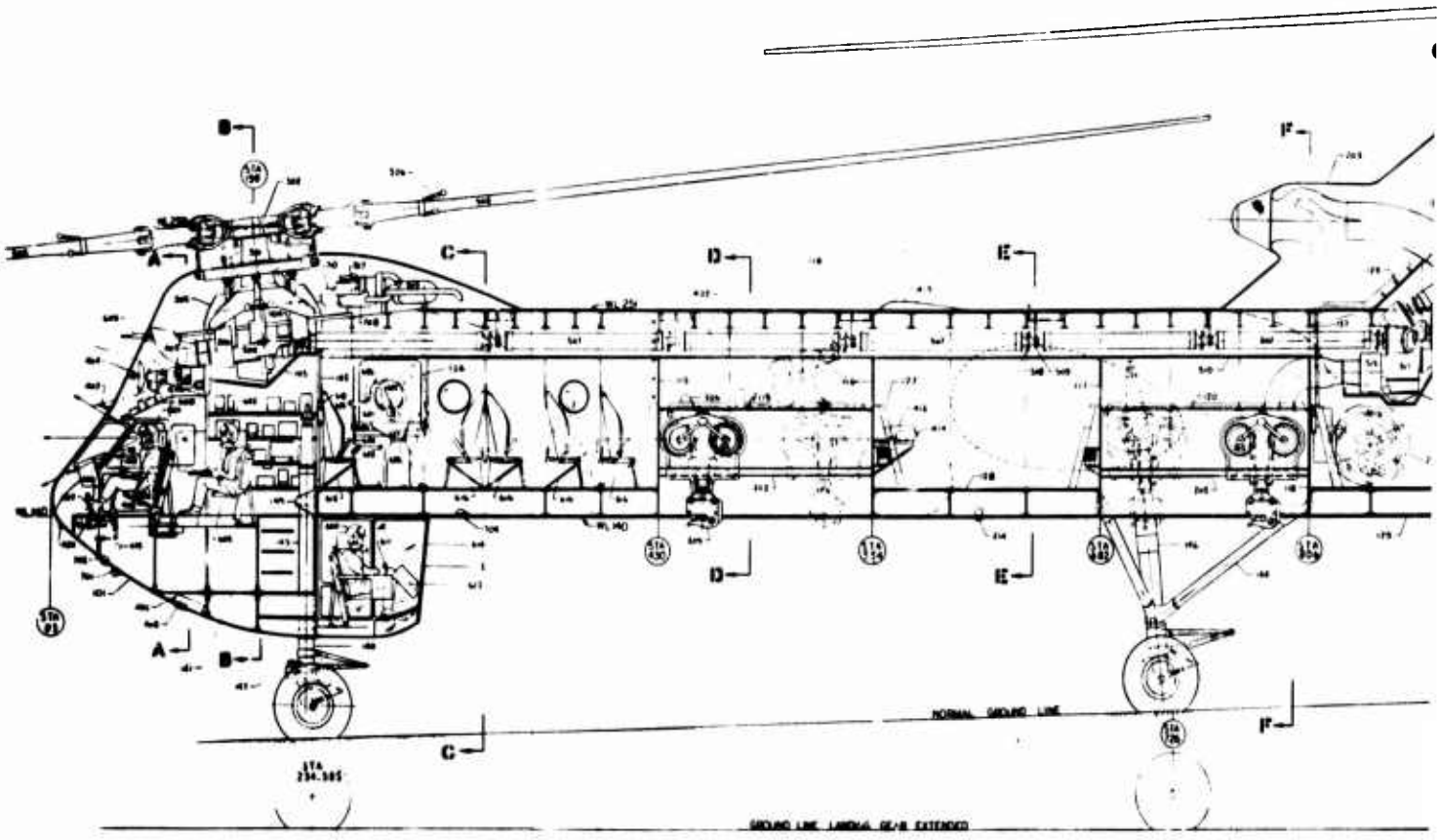

Figure 2. Model 301 Inboard Profile
(Sheet 1 of 2).

Preceding page blank

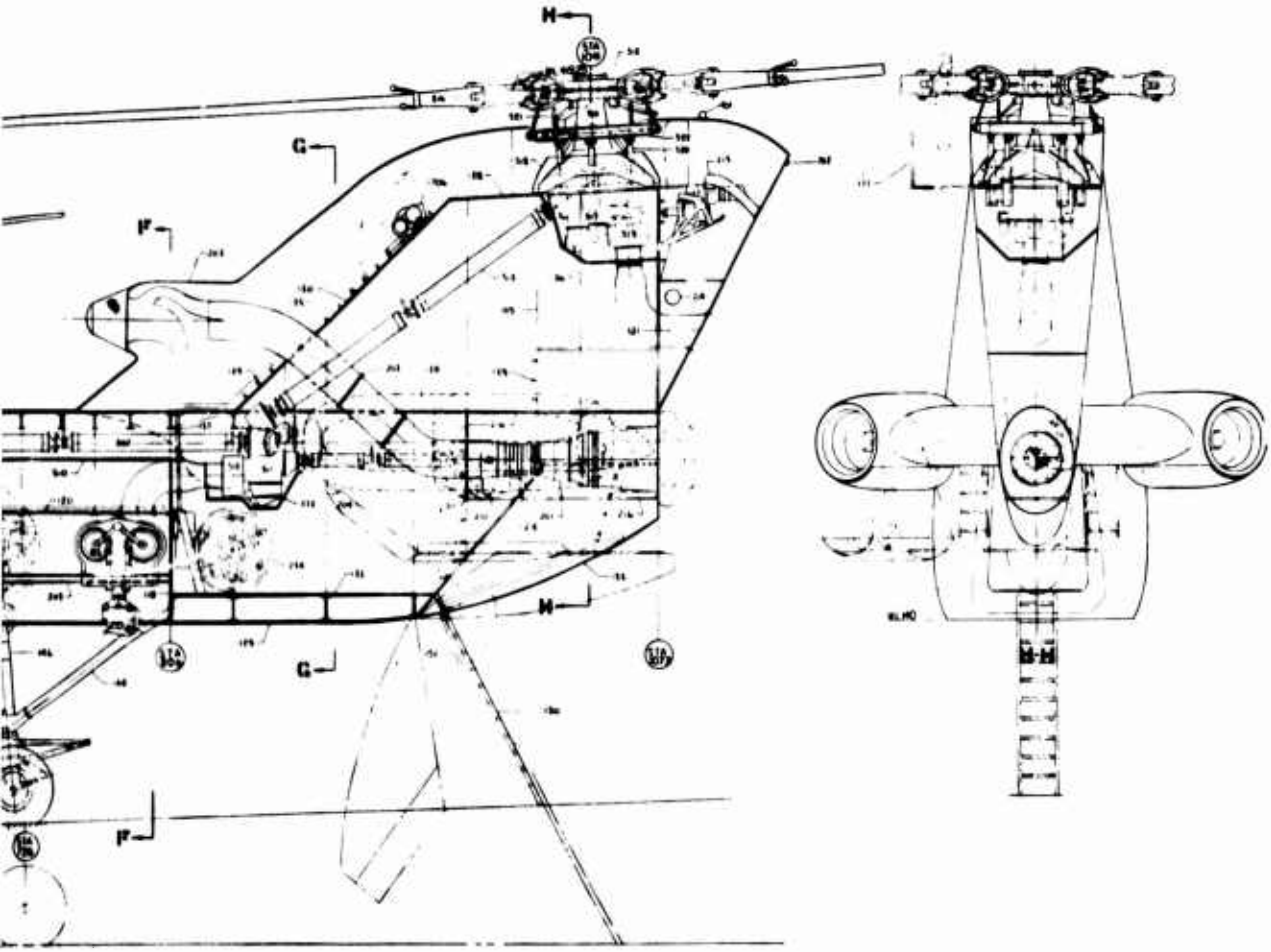
H
G
F
H
G
F
B-H

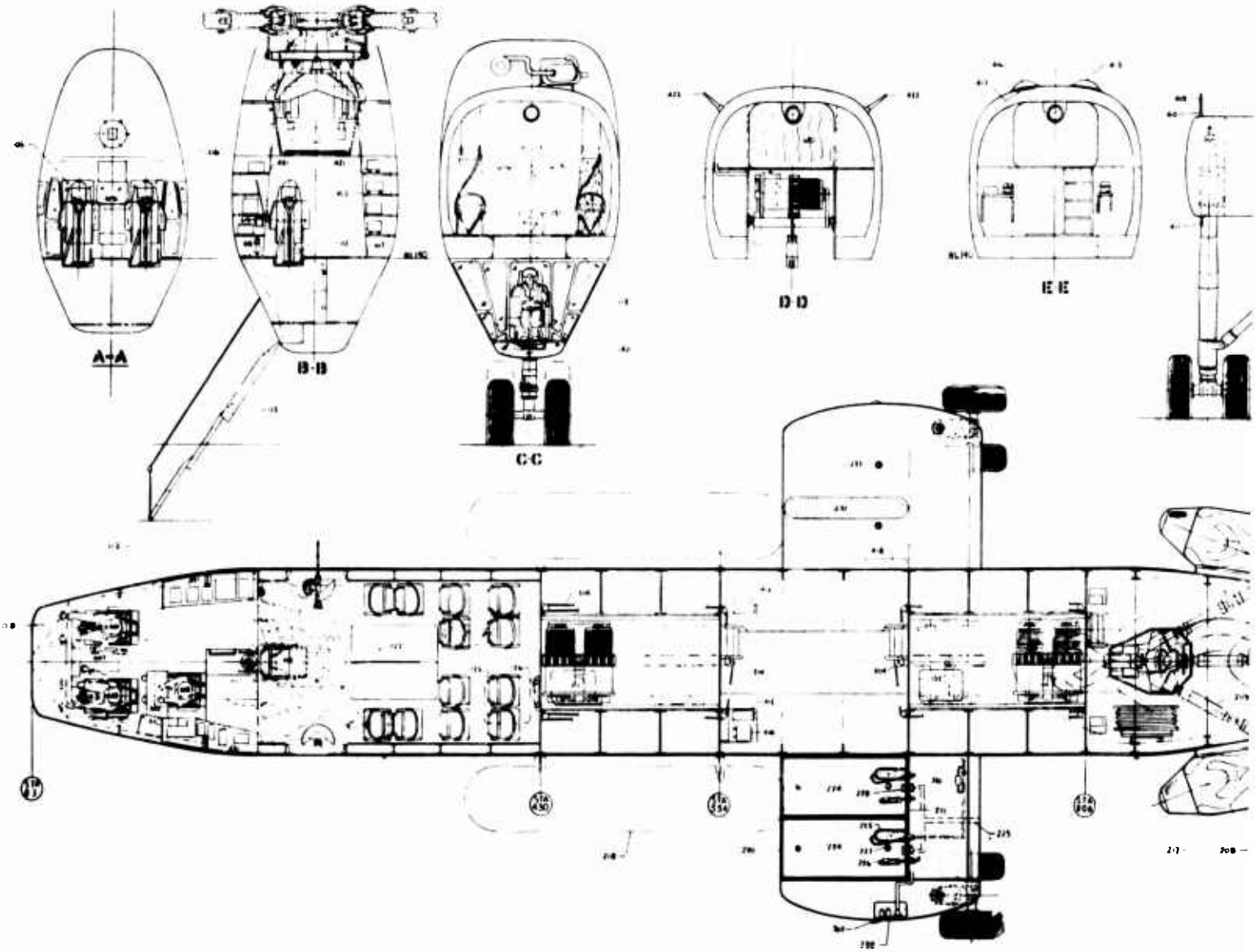

Figure 2. Continued
(Sheet 2 of 2).

Preceding page blank

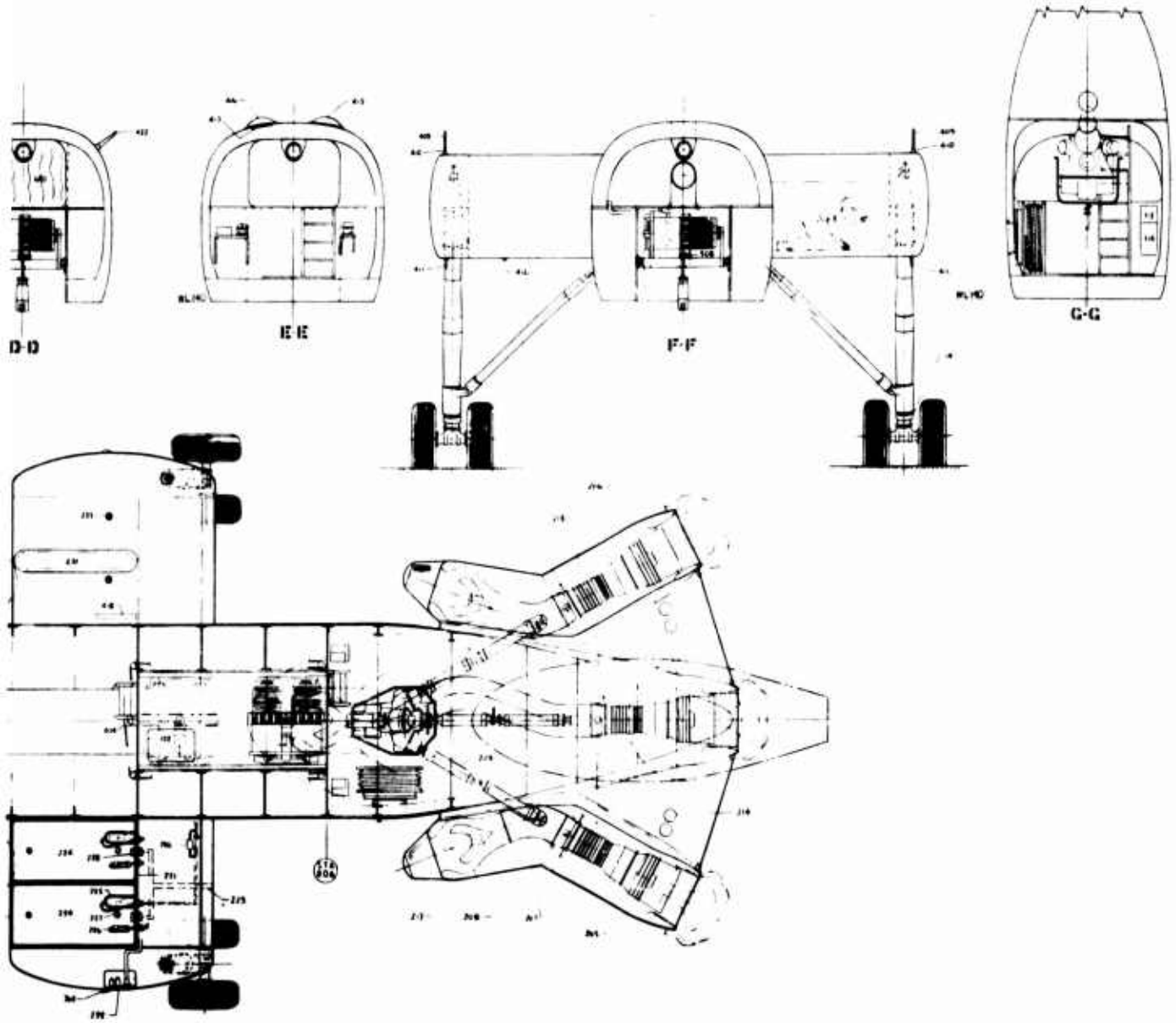
D-D
E-E
F-F
G-G

BOEING MODEL 301

INBOARD PROFILE LEGEND

(REFERENCE DRAWING 301-10000, CHANGE C)

AIRFRAME AND LANDING GEAR

101 Forebody Structure Sta. 83 to Sta. 236
102 Transmission Support Bulkhead Sta. 170(Fwd)
103 Transmission Support Bulkhead Sta. 236(Aft)
104 Transmission Mounting Deck and C-5A Splice
105 Transmission Compartment Insulation Panels and Drip Pan
106 Windshield
107 Side Vision Transparent Panel
108 Forward Vision Transparent Panel
109 Transmission Support Bulkhead Sta. 1011(Fwd)
110 Emergency Exit Hatch (2)(Pilot & Copilot)

111 Work Platform Aft Transmission and Rotor
112 Flight Deck
113 Load Facing Pilot's Enclosure (Removeable)
114 Constant Section Mid-Body Structure Sta. 236 to Sta. 840
115 Forward Hoist Support Bulkhead Sta. 430
116 Forward Hoist Support Bulkhead Sta. 554
117 Aft Hoist Support Bulkhead Sta. 682
118 Aft Hoist Support Bulkhead Sta. 806
119 Forward Hoist Bay Structure
120 Aft Hoist Bay Structure

121 Troop/Cargo Deck (Floor)
122 Cargo Hatch
123 Stowable Entrance Stairs (Fwd)
124 Waist Gunner Port/Emergency Exit Hatch (2)
125 Overhead Ditching Hatch
126 Ditching Exit Integral Ladder
127 Tunnel Stair (4)
128 Mid-Body Walkway Flooring
129 Afterbody Structure Sta. 840 to Sta. 1077
130 Front Spar

131 Aft Bulkhead and Transmission Support Sta. 1077
132 Aft Cargo Deck (Floor)
133 Aft Door and Center Engine Work Platform
134 WL 251 Deck and C-5A Splice
135 Upper Aft Pylon Structure
136 Drip Pan Aft Beam
137 Leading Edge Access Ladder
138 Aft Transmission Mounting Deck
139 Integral Maintenance Ladder (Aft Rotor)
140 Forward Landing Gear Assembly

141 WL 98 Deck (C-5A Splice)
142 Nose Gear Steering Unit
143 Vertical Gear Retraction Strut (Nose)
144 Drag Brace (Main)
145
146 Main Landing Gear Assembly (2)
147
148 Vertical Gear Retraction Strut (Main)
149 Nose Gear Support Structure
150 Stowable Extension Ladder (Aft)

151 Rear Entrance Hatch
152 Hoist Access Hatch (2)

PROPULSION AND FUEL SYSTEM

201 Center Engine Installation
202 Center Engine Air Induction System
203 Center Engine Air Inlet Particle Separator
204 Center Engine Drive Shafting
205 Left Outboard Engine Installation
206 Right Outboard Engine Installation
207 Outboard Engine Air Induction System
208 Outboard Engine Air Inlet Particle Separator
209 Outboard Engine Drive Shafting
210 Accessory Drive Gearbox

211 Engine Driven Blower Unit
212 Starter Unit
213 Engine Oil Tank
214 Fire Detection and Extinguishing System
215 Auxiliary Power Unit
216 Firewall
217 Engine Inlet Screen
218 Auxiliary Fuel Tank
219
220 Fuel Tank Shell Structure

221 Shell Removal Bolt Face
222
223
224 Self-Sealing Supply Fuel Cell (4)
225 Fuel System Pump and Shutoff Valve (4)
226 Fuel System Fuel/Defuel Valve (4)
227 Fuel Quantity Measuring Unit
228 Fuel Jettisoning Valve (4)
229 Overboard Dump Line
230 Auxiliary Fuel Pump

231 Vent Lines
232 Pressure Fueling Panel (2)
233 Gravity Fill Cap
234 Refueling Hose and Reel Assembly

CARGO HANDLING

301 Forward Hoist Assembly
302 Aft Hoist Assembly
303 Hoist Positioning Guides
304 Traverse Drive Unit (2)
305
306 Hoist Drum Turbine Drive
307
308 Cable Cutter
309 Coupling Assembly
310

311
312
313
314 External Cargo Optical Sensor
315

FLIGHT CONTROLS AND AVIONICS

401 Cyclic Control Stick
402 Yaw Control Pedals
403 Collective/Power Control Lever
404 Ground Map Radar Antenna
405 Ground Map Radar Receiver-Transmitter
406 Glide Slope Antenna
407 VHF-FM Homing
408 Radar Altimeter Antenna (2)
409 VHF-UHF Antenna (2)
410 IFF Antenna

411 VOR-Localizer Antenna (2)
412 Marker Beacon Antenna
413 Heading/Attitude Displacement Gyroscope (2)
414 Inertial Platform
415 LORAN Antenna
416 ADF Sense Antenna
417 ADF Loop Antenna
418 HF Antenna
419
420

421 Avionics and Flight Control Equipment
422 VHF-FM Antenna (2)
423 Collision Avoidance System Antenna (4)
424 A-Scan Tactical Landing Sensor
425
426 Doppler R/T Antenna

DYNAMIC SYSTEM

501 Forward Rotor
502 Forward Rotor Hub
503 Forward Rotor Blades
504 Forward Rotor Transmission
505 Forward Transmission Mount
506 Forward Transmission Oil Cooler
507 Longitudinal Synchronizing Shaft (6 Sections)
508 Sync/Shaft Couplings
509 Sync/Shaft Hangers
510 Sync/Shaft Shroud

511 Combining Transmission
512 Combining Transmission Oil Cooler
513 Slant Shaft (2 Sections)
514 Aft Rotor
515 Aft Rotor Hub
516 Aft Rotor Blades
517 Aft Rotor Transmission
518 Aft Transmission Mount
519 Aft Transmission Oil Cooler
520 Control Actuator/Upper Rotor Controls

521 Pitch Link/Upper Rotor Controls
522 Swashplate/Upper Rotor Controls
523 Drip Pan Combiner
524
525
526 Pendulum Absorbers

CREW STATIONS AND EQUIPMENT

601 Pilot
602 Copilot
603 Systems Engineer
604 Load-Facing Pilot
605 Crash Attenuation Seat (4)
606 Instrument Display Panel
607 Center Instrument Pedestal
608 Overhead Instrument Panel
609 Pitot Tube
610 Systems Engineer's Console

611 Load-Facing Pilot Side Stick Controls
612 Visual Augmentation Display Panel (L.C.C.)
613
614 Load-Facing Pilot Emergency Exit Panel
615 Crew Chief Crash Attenuation Seat
616 Troop Crash Attenuation Seat (12)
617 Miscellaneous Equipment Stowage Locker
618 Portable Fire Extinguisher (3)
619 First Aid Kit (2)
620 Removable Gun Mount Support Beam (2)

621 Pintle Mount (2)
622 M60D (7.62 mm) Machine Gun (2)
623 Ammunition Stowage (2)
624 Ammunition Chute (2)
625 Ammunition Booster Drive (2)
626 Flexible Ammunition Feed Chute (2)
627 Casing Collector (2)
628 Casing Collector Disposal Bag (2)
629
630 Curtain (Environmental Control)

HYDRAULICS, PNEUMATICS, ELECTRICAL & ENVIRONMENTAL CONTROL SYSTEM

701 Flasher/Anti-Collision Light (2)
702 Navigation Light (3)
703 Forward Landing and Searchlight
704 Cargo Handling Floodlight (3)
705
706 Aft Air Turbine Motor, Hydraulic Pump and Alternator
707 Forward Air Turbine Motor Drive and Hydraulic Pump
708 Air Cycle Pack
709 CBR Filter
710 Water Separator

711
712
713 Secondary Electrical Distribution Panel
714 Electrical Distribution Panel

Figure 3. Model 301 Inboard Profile Legend.

METHODS USED

This study was composed of the following elements:

Design Reviews
Maintenance Engineering Analyses
GSE Inventory Analyses
Related Activities
Documentation
Monthly Reports

all of which were accomplished by specialists in maintainability and/or ground support equipment.

DESIGN REVIEWS

Maintainability personnel conducted preliminary and critical system and component design reviews and continuous daily drawing board reviews with design engineers. This was a vital element of the investigation which provided the necessary data to establish maintenance concepts, define maintenance requirements and perform maintenance engineering analyses. These reviews also provided opportunities to influence the design by making maintenance recommendations.

Pertinent information from the "Material Needs" document was correlated with the HLH system design concepts and objectives to ensure compatibility with the Army's operational, logistics, and maintenance philosophies.

MAINTENANCE ENGINEERING ANALYSES

Existing maintenance engineering analyses (MEA) written under the advanced technology components (ATC) contract were reviewed and the results are included in this study. MEA's were written for all organizational and direct support level servicing and maintenance tasks for each applicable component, assembly, subassembly or installation of the non-ATC systems. The MEA's contain the following elements of data:

- Maintenance concept
- Maintenance task descriptions by level
- Elapsed time required to accomplish each maintenance task
- Personnel requirements
- GSE requirements/characteristics

The following documents were used to identify MEA's and assign Military Occupational Specialty (MOS) codes:

- AMCP 700-4, Standard Integrated Support Management System (SISMS)
- AR611-201, Enlisted Military Occupational Specialties

GSE INVENTORY ANALYSES

All GSE requirements identified by maintenance engineering analysis were researched by GSE personnel and compared to existing military and commercial equipment to determine:

- Existing as-is equipment available in the inventory to meet the requirement
- Existing equipment requiring modification to meet the requirement
- Requirements which cannot be satisfied with existing equipment and will require new design and development effort

Some of the sources utilized in this examination are as follows:

- Army Adopted/Other Selected Items and List of Reportable Items

  SB700-20

- Military Standardization Handbook Technical Information File of Ground Support Equipment

  MIL-HDBK-300B

- Army Aviation Maintenance Engineering Manual Ground Handling Test & Service Equipment

  TM55-405-10

- Index of Supply Catalogs & Supply Manuals

DOA Pamphlet No. 310-6

- Test Measurement & Diagnostic Equipment (TMDE) Manual by USAWECOM

- Shop Sets, Aircraft Maintenance

  SC1730-99-CL-A01 (Thru) -A04

- Tool Kits, Aircraft Mechanics & Repairmen

  SC5180-99-CL-A01 (Thru) -A07

- Aircraft Maintenance and Repair Shop Specialized Equipment

  SC4920-99-CL-A-08

The effort to review a maximum number of individual ground support equipment items, prior to the selection of the best equipment to satisfy each requirement, entailed a moderate degree of difficulty in finding detailed data for existing commercial and military GSE. The above-listed documents were utilized to the fullest extent in the review and selection process;however, in some areas success was limited by the following factors:

- The number of items included in some categories of equipment is relatively small compared to the number of such items available in military inventories. This condition limits the scope of equipment review and selection from these documents, particularly with regard to MIL-HDBK-300B.

- In many cases, the descriptive data for individual items does not specify maximum capabilities. For example, data regarding draw-bar pull and height for tow vehicles, hook height for lifting equipment, and maximum outputs for electrical units is not always clear or is not included on the equipment data sheets.

- Recently developed equipment is not included.

In the effort to review the available commercial equipment and to determine the latest state of the art as related to HLH equipment requirements, reference criteria were reviewed in the

Thomas Register and the Marketing Directory issue of AVIATION WEEK AND SPACE TECHNOLOGY magazine. Additional leads for technical data were obtained from cognizant Boeing personnel in the Manufacturing Engineering and Materiel Departments.

Extensive use was made of the facilities, experience, and data available in the GSE Division of the Naval Air Engineering Center at the nearby Philadelphia Navy Yard.

RELATED ACTIVITIES

The facilities at nearby Philadelphia International Airport were used to good advantage. Several visits were made to commercial activities to observe firsthand their servicing and maintenance operations and to discuss with maintenance personnel their problems and recommendations for solutions relative to large fixed-wing jet aircraft which have similar GSE and/or GSE requirements. Servicing and maintenance were observed on the DC10 and L1011 aircraft which recently became operational at Philadelphia and require high lift GSE comparable to that envisioned for the HLH for a number of maintenance tasks. Equipment required for aircraft towing, fueling, engine servicing, and cargo loading was observed. Design features of the aircraft such as cockpit instrument layout and hydraulic compartment arrangement were also observed. The information obtained provided recommendations to design engineers for on-board features to eliminate or facilitate maintenance.

DOCUMENTATION

Support Equipment Requirements and Characteristics

As the MEA's were completed for each maintenance task, pertinent data relative to the associated GSE requirements/characteristics were documented on Support Equipment Requirements and Characteristics worksheets (Figure 4). These worksheets identify maintenance tasks and provide a summary of personnel requirements, task times, and equipment types and characteristics necessary for the performance of each task.

The plan of performance calls for the characteristics of each piece of equipment to be identified for each equipment approach, i.e., on-board equipment, aircraft mountable equipment, and ground based equipment; however, it became apparent that this requirement was impractical for this particular

THE BOEING COMPANY
VERTOL DIVISION

SUPPORT EQUIPMENT REQUIREMENTS AND CHARACTERISTICS

PAGE _____ OF _____

PROGRAM	CONTROL NO.	PREPARED BY	DATE
SYSTEM	REVISION	APPROVED BY	DATE
NOMENCLATURE	PART NO.		

REQUIREMENT				MAINT. LEVEL	MAINTENANCE CONCEPT AND TASK DESCRIPTION	PERSONNEL RQRMTS		TASK TIME IN ELPSD. MIN.	EQUIPMENT TYPE	CHARACTERISTICS				REMARKS
SYSTEM	SUB SYS.	ASSY. OR COMP.	MAINT. TASK			MOS.	SKILL			COMMON (ON-BOARD ACFT MOUNT. GROUND)	ON-BOARD EQUIPMENT	AIRCRAFT MOUNTABLE EQUIPMENT	GROUND BASED EQUIPMENT	

Figure 4. Support Equipment Requirements and Characteristics.

study since most of the GSE requirements identified could be logically classified into only one equipment approach.

Furthermore, the exclusion of built-in test equipment (BITE) from this investigation resulted in identification of relatively few GSE requirements having characteristics which could place them in a category other than ground based equipment.

As a result of these considerations:

- Most of the requirements for GSE were classified as ground based equipment.
- Several requirements were identified as either aircraft mountable or ground based, depending on circumstances.
- A few requirements were classified as aircraft mountable only.
- None of the requirements were classified as on-board equipment since they were part of the basic aircraft design or were designated as flyaway equipment, i.e., built-in work platforms, rotor blade tie-down lines, etc.

GSE Requirements Index

GSE requirements were extracted from the Support Equipment Requirements and Characteristics worksheets and compiled in a single GSE Requirements Index (Figure 5). This index lists the GSE items by nomenclature, provides a brief statement of function and identifies whether the item is military inventory/ commercially available, or new equipment.

This requirements index was periodically reviewed to ensure validity of requirements as related to basic ground rules of the investigation.

Appendix I is the complete GSE Requirements Index developed during this study.

HLH/GSE Requirements/System Application Matrix

As GSE requirements were identified, a matrix was developed (Figure 6) to provide a ready cross-reference of all GSE

GSE REQUIREMENTS INDEX				
NOTE	RQMT. NO.	CLASS	NOMENCLATURE	DESCPIPTION & PURPOSE

Figure 5. GSE Requirements Index.

	REQUIREMENT NUMBER																														
SYS/COMP/TASK	1	2	3	4	5	6																									

Figure 6. HLH GSE Requirements/System Application Matrix.

requirements and the aircraft components/subsystems to which they apply. This matrix was used with the GSE Requirements Index (Figure 5) to screen items for multiple application and ultimately to select the best item for any application and to eliminate redundant requirements.

Appendix II is the complete HLH GSE requirements/system application matrix.

GSE Inventory Analysis and Assessment

Inventory screening and equipment availability was documented on GSE Inventory Analysis and Assessment worksheets (Figure 7). Each equipment requirement identified through maintenance task analysis was recorded on the Inventory Analysis worksheet and an assessment was performed to define whether the requirement could best be satisfied with the on-board equipment, aircraft mountable equipment, or ground based equipment approach. The part number and/or Federal Stock Number (FSN) for suitable military inventory or commercially available equipment was subsequently completed with the recommendation to use existing equipment, modify existing equipment, or develop new equipment as appropriate.

Equipment Modification Requirement and Cost

One of the recommendations of the GSE inventory analysis and assessment above could be to modify existing equipment for use on the HLH. An Equipment Modification Requirement and Cost worksheet (Figure 8) was provided for documenting the necessary modifications to the existing equipment selected and the estimated recurring and nonrecurring costs. Preliminary analysis identified several items of equipment that fell into this category. However, subsequent analysis eliminated all modification items for one of the following reasons:

- Design change eliminated the requirement for equipment modification.
- Reanalysis indicated that existing equipment could be used without modification.
- Reanalysis indicated procurement of new equipment to be more cost effective than equipment modification.

Although there are presently no GSE items for modification in this study, the Equipment Modification and Cost worksheet has been included to show the approach used and to retain the worksheet for any future follow-on studies.

THE BOEING COMPANY
VERTOL DIVISION

G.S.E. INVENTORY ANALYSIS AND ASSESSMENT

PAGE _____ OF _____

PROGRAM	CONTROL NO.	PREPARED BY	DATE
SYSTEM	REVISION	APPROVED BY	DATE
NOMENCLATURE	PART NO.		

REQUIREMENT								ON BOARD EQUIPMENT	AIRCRAFT MOUNTABLE EQUIPMENT	GROUND BASED EQUIPMENT
SYSTEM	SUB SYS.	ASSY. OR COMP.	MAINT. TASK	MAINT. LEVEL	EXISTING EQUIP.	NOD TO EXIST EQUIP	NEW LEVEL EQUIP.	PART NO. / FSN / NOMENCLATURE	PART NO. / FSN / NOMENCLATURE	PART NO. / FSN / NOMENCLATURE

Figure 7. GSE Inventory Analysis and Assessment.

THE BOEING COMPANY
VERTOL DIVISION

EQUIPMENT MODIFICATION REQUIREMENT AND COST

PAGE _____ OF _____

PROGRAM	CONTROL NO.	PREPARED BY	DATE
SYSTEM	REVISION	APPROVED BY	DATE
NOMENCLATURE	PARY NO.		

REQUIREMENT					PART NO.	NOMENCLATURE	F.S.N.	MODIFICATION DESCRIPTION	COST ESTIMATE	
SYSTEM	SUB SYS.	ASSY OR COMP	MAINT. TASK	MAINT. LEVEL					NON-RECURRING	RECURRING

Figure 8. Equipment Modification Requirement and Cost.

New Equipment Requirement and Cost

All requirements for new equipment are documented on New Equipment Requirement and Cost worksheets (Figure 9). This form provides equipment nomenclature and description, development and procurement lead time, and nonrecurring and recurring cost estimates for the new equipment. Estimates for GSE nonrecurring effort were generated by a technique developed for estimating the full engineering process. The technique is based on experience data related to CH-46/CH-47 GSE programs. Variable factors for project research, layout, and drafting are added to relatively constant factors for engineering descriptions, design review, coordination, liaison, and fit and function demonstrations to obtain a total man-hour estimate. The man-hour figure is multiplied by a current dollar per man-hour figure to obtain the final estimated (planning) cost for the nonrecurring effort. For new equipment, two recurring estimates are supplied: for one piece and for one piece in a lot of five pieces. Descriptions, sketches and diagrams of the new equipment were prepared to provide sufficient detail for estimating purposes (see Appendix III).

GSE Requirements (Limited Data)

GSE requirements which are not fully identifiable and/or justifiable until the HLH development program has progressed further are included in the GSE Requirements Index, Appendix I. Separate MEA's for these requirements were not considered practical due to limited configuration definition at this time. Instead, maintenance tasks at the organizational and direct support levels were first identified and the necessary GSE to support these tasks was then identified by nomenclature.

GSE requirements numbers P120 through P150 (ref. GSE Requirements Index, Appendix I) are dependent on the design of the engine. Basic engine design information was insufficient to permit MEA's to be completed on this system. However, through liaison with the engine manufacturer, the power-plant maintenance requirements and related GSE for organizational and direct support level activities were identified and documented.

GSE requirement numbers 151 through 156 (ref. GSE Requirements Index, Appendix I) for the rotor blades, supervisory panel, anti/deicing system, and the master caution panel were identified as a result of discussions with engineering design personnel and review of preliminary drawings and sketches. Sufficient information was not available to write MEA's, but maintenance task requirements and related GSE were identified and documented.

THE BOEING COMPANY
VERTOL DIVISION

NEW EQUIPMENT REQUIREMENT AND COST

PAGE _____ OF _____

PROGRAM	CONTROL NO.	PREPARED BY	DATE
SYSTEM	REVISION	APPROVED BY	DATE
NOMENCLATURE	PART NO.		

REQUIREMENT					PART NO.	NOMENCLATURE	NEW EQUIPMENT DESCRIPTION	LEAD TIME MOS.	COST	
SYSTEM	SUB SYS.	ASSY OR COMP.	MAINT. TASK	MAINT. LEVEL					NON-RECURRING	RECURRING

Figure 9. New Equipment Requirement and Cost.

RESULTS

GSE REQUIREMENTS IDENTIFIED

Eighty MEA's were written on the non-ATC systems, while 101 MEA's written as part of the program maintainability effort for the ATC systems were reviewed. The analyses identified 119 GSE requirements. In addition, 37 GSE requirements peculiar to the power plant, rotor, and power supply systems were identified without the benefit of any MEA's. The 156 requirements identified are summarized in Table I.

TABLE I. EQUIPMENT TYPE/FUNCTIONAL CLASSIFICATIONS

TYPE	NO. OF RQMTS.
Power Plant Tools	31
Slings	15
Adapters	19
Standard Tools (torque wr., elect. wiring repair, etc.)	11
Special Tools (pin puller, blade fold, spanner, etc.)	2
Hoist Equipment	
Gauges	
Fixtures	4
Dollies	6
Jacks	2
Cleaning Equipment	5
Maintenance Platforms/Ladders	4
Flyaway Equipment (tie-down)	4
Trailers	2
External Power Units	4
Servicing Units	9
Towing Equipment	4
Testers	8
TOTAL	156

GSE INVENTORY ANALYSIS

Analysis of the GSE requirements resulted in the selection of 40 items of existing equipment that meet the required characteristics of the HLH (Table II) and 66 items of new equipment that will require design and development effort (Table III).

Equipment was not selected for the remainder of the 156 requirements originally identified. Eight requirements were for transportability only and were excluded from the study. Forty-two requirements were deleted either by design changes and combining of requirements, or were considered to be satisfied by use of base equipment, flyaway or standard items.

ELAPSED MAINTENANCE DOWNTIME AND PERSONNEL REQUIREMENTS

The maintenance downtime in elapsed minutes and the quantity of personnel required for each maintenance task have been extracted from the Support Equipment Requirements and Characteristics worksheets. This information was developed through maintenance engineering analysis.

The elapsed maintenance time reflects the pure time to accomplish each task. Administrative time, time to obtain tools and parts, and time to position and/or move the aircraft are not included. The number of personnel required is shown for each maintenance task. This data, by aircraft system, is shown in Table IV.

GSE REQUIREMENTS PER OPERATING COMPANY

A preliminary list of the ground support equipment required to support a single company of heavy-lift helicopters is provided to aid integrated logistics support (ILS) preliminary planning and trade study efforts. This information, shown in Table V, was compiled based on the following guide lines:

- An aircraft company is assumed to have nine aircraft located at three operational sites (one main - two satellite).
- All organizational level tasks can be performed at any of the three sites.

- In order to keep quantities of equipment to a minimum, removals will be accomplished using only one sling and one adapter whenever possible. This is based on the assumption that the replacement component is positioned at the aircraft and the old component can be supported temporarily on a suitable surface.

- The figures in the cost column for new equipment are estimates for each unit when purchased in lots of five. If only one prototype is procured, these costs will increase from 50 to 100% per item.

- Nonrecurring effort is not shown as part of the company outfitting costs (these costs are shown in Table III).

TABLE II. HLH GSE, EXISTING AS-IS

RQMT. NO.	NOMENCLATURE	FSN
11	Bomb Hoist (Aero 14B 3340# cap.)	R1095-216-2334-S210
17	Truck, Lift, Wheel Change	1730-293-3849
25	Jack-Tripod Adjustable Height (3)	1730-391-7946
26	Jack-Axle (3) (1) Reqd.	5120-203-4697
	(2) Reqd.	5120-544-5648
27	Trailer - Transportation Model 3060	Not Assigned P/N 106281 Air Logistics Corp.
31	Power Unit - Propeller Shaft	5120-337-9652
32	Cleaning Equipment	4920-986-0809
37	Spray Outfit Type MB-3	1730-529-8885
42	Trailer - Transportation Model 3000	1740-516-7930
43	Hoist Winch Lug-All Model 238-R-M	3950-947-0457
46	Tractor, Wheeled Aircraft Towing	1740-580-7990
49	Air Cylinder, Portable	1730-625-6872
54	Dispenser, Hydraulic	4920-245-1832
57	Test Stand, Hydraulic	4920-141-8801
58	Tank and Pump Unit, Jet Oil Servicing	4930-628-1121
64	Wrench, Crow-foot	5120-184-8385
65	Press, Arbor, Hand Operated	3444-163-4338
73	Charger, Battery	6130-985-8157
74	Gauge Air Pressure, Type GMU-25/E	4935-793-1677
76	Multimeter, Type AN/PSM 4C	6625-893-3779
77	Auxiliary Power Unit	4920-938-8363
78	Compressor, Reciprocating, Power Driven	4310-764-2316
86	Tow Bar - Universal	1730-640-8080
89	Auxiliary Power Unit	6115-553-8937
91	Scrub Brush, Long Handled	7920-685-3969
		7920-926-5146
95	Tool, Contact Insertion	5120-765-3689
96	Tool, Contact Extraction	5120-765-3688
97	Tool, Crimping	5120-919-8078
98	Tool, Ty-Rap	5120-986-5907

TABLE II - Continued

RQMT. NO.	NOMENCLATURE	FSN
99	Heater Gun	4940-785-1162
100	Test Set, Insulation Breakdown	6625-765-9079
105	Tensiomometer, Cable	6635-647-3371
109	Regulator, Pressure, Compressed Gas	6680-551-1094
110	Manometer	6685-526-5325
111	Test Set Liquid Quantity	4920-834-1453
113	Combustible Gas Indicator Set Portable	6665-664-4650
116	Wrench Set Crow-Foot	5120-181-6747
117	Platform Maintenance Type B-1	1730-390-5618
119	Crane, Truck	Not Assigned
P126	Boroscope	Not Available

TABLE III. HLH GSE, NEW

RQMT. NO.	NOMENCLATURE	ESTIMATED UNIT COST NON-RECURRING	RECURRING QTY-1	RECURRING QTY-5
3	Sling - Swashplate	$4554	$1380	$ 870
4	Sling - Rotor Blade	5152	8000	5000
P5	Sling - Engine	Not Available		
6	Sling - APU	5244	960	640
7	Lifting Eye/Sling QTCU or Aft Pylon	6992	1220	560
8	Sling - Stub Wing/Fuel Cell	5106	500	370
10	Sling - Nylon, Multi-Purpose	4347	575	265
12	Adapter - Rotor Head	5497	6800	3120
13	Adapter - QTCU	6831	6750	3220
14	Adapter - Combining Transmission	5727	4500	2320
P15	Adapter - Engine Package	5497	4950	1720
19	Adapter - Cargo Winch	5612	5040	2800
23	Dolly - Transport, Rotor Blades	5520	11000	5000
30	Tool Set - Blade Fold	Not Available		
33	Adapter - Cargo Winch Spool	5382	3920	1800
34	Centering Blocks - Boost Actuator	4140	1365	660
39	Sling - Combining Transmission	4278	1100	650
45	Adapter - Swashplate	5704	2550	1530
47	Sling - Cargo Winch Assembly	4324	1890	1122
66	Adapter Set - Arbor Press	4002	1200	900
69	Lifting Tool - Generator	4416	990	549
71	Removal Tool - Wheel Brake Lining	3680	495	240
74	Wrench - MLG Oleo Retaining Nut	4554	700	285
79	Wrench - FLG Oleo Retaining Nut	4462	700	285
80	Assembly Fixture - Pitch Link	4554	2210	1430
101	Test Set - Dynamic Absorber	5198	7920	6030
104	Adapter - Pitch Housing/Cross Beam Assembly	4232	4000	1935
P114	Engine Adapter - Bomb Hoist	5014	800	380
115	Davit, Maintenance, Lightweight	6440	1300	800
118	Adapter Set - Rotor Xmsn Mounting Bolts	6716	2300	2000
P120	Depth Gage - Torquemeter Pickup	Not Available		
P121	Test Set - Torquemeter Runout	"	"	
P122	Test Set - Thermocouple	"	"	
P123	Test Set - Electrical Components Checkout	"	"	
P124	Rigging Fixture - Variable Compressor Vane Linkage	"	"	
P125	Trim Fixture, Fuel Control	"	"	
P127	Plug - Shorting, Permanent Magnet Generator (PMG)	"	"	
P128	Adapters/Nozzles - Engine Wash	"	"	

TABLE III - Continued

RQMT. NO.	NOMENCLATURE	ESTIMATED UNIT COST NON-RECURRING	RECURRING QTY-1	RECURRING QTY-5
P129	Adapters/Nozzles - Compressor Cleaning	Not Available		
P130	Adapter - Lifting, Compressor Case Half	"	"	
P131	Puller - L.P. Turbine Oil Tube Filter	"	"	
P132	Puller - Accessory Gear Box Seal	"	"	
P133	Puller - Fuel Pump Drive Oil Seal	"	"	
P134	Adapter - Accessory Gear Box Assy	"	"	
P135	Component Stand - Universal	"	"	
P136	Adapter - Combustor Assembly	"	"	
P137	Adapter - Power Turbine Assembly	"	"	
P138	Test Set - Electronic Control and Power Management With Adapter Cables	"	"	
P139	Rigging Pins, Inlet Guide Vanes and Fuel Control	"	"	
P140	Adapter - Socket, Gas Generator Rotation	"	"	
P141	Trim Fixture - Remote	"	"	
P142	Test Set - Fuel Control/Compressor Variable Geometry (CVG) Position	"	"	
P143	Wrench - Spline, L.P. Turbine Rotor Coupling Nut	"	"	
P144	Puller - L.P. Turbine Coupling Nut Lock	"	"	
P145	Adapter Set - Power Turbine Support	"	"	
P146	Fixture - Setting, Power Turbine Rotor, Axial Position	"	"	
P147	Wrench - Spanner, Power Turbine Rotor Bearing Retaining Nut	"	"	
P148	Holder - Power Turbine Rotor	"	"	
P149	Holder - Power Wrench to Power Turbine Rotor	"	"	
P150	Adapter Set - Power Turbine Removal	"	"	

TABLE III - Continued

RQMT. NO.	NOMENCLATURE	ESTIMATED UNIT COST NON-RECURRING	RECURRING QTY-1	RECURRING QTY-5
151	Wrench - Spanner, Rotor Blade Retention Pin Nut	$ 4,350.00	$ 400.00	$ 185.00
152	Wrench - Anti-Rotation, Rotor Blade Retention Pin	4,780.00	575.00	330.00
153	Guide Pin - Rotor Blade Retention Pin	3,700.00	350.00	140.00
154	Test Set - Supervisory Panel	5,700.00	8,500.00	3,000.00
155	Test Set - Ice Protection Systems	6,900.00	27,000.00	15,000.00
156	Test Set - Master Caution Panel	3,500.00	1,000.00	400.00
		$172,150.00	$122,940.00	$65,536.00

NOTE: Except for P15 and P114 which are Boeing designed, cost estimates for 'P' requirements are not shown since these items will be designed and fabricated by the engine contractor (Allison).

TABLE IV. ELAPSED MAINTENANCE DOWNTIME AND PERSONNEL REQUIREMENTS

TASK DESCRIPTION	ELAPSED MAINTENANCE TIME (min)	QUANTITY PERSONNEL REQUIRED
AIRFRAME		
Replace Work Platform Fwd Xmsn and Rotor	46	3
Replace Work Platform Aft Xmsn and Rotor	52	3
Replace Engine Work Platforms	52	3
Replace Pendulum Absorber	33	3
Replace Dynamic Absorber	40	3
Tune and Test Dynamic Absorber	30	1
Moor Aircraft	15	2
Tow Aircraft	23	2
Wash Aircraft	240	2
Clean Aircraft Inside	120	1
LANDING GEAR		
Replace Oleo Strut - Fwd Landing Gear	45	3
Service Oleo Strut - Fwd Landing Gear	17	1
Replace Forward Landing Gear Assy	73	3
Replace Oleo Strut - Main Landing Gear	45	3
Service Oleo Strut - Main Landing Gear	17	1
Replace Drag Brace Assy - Main Landing Gear	50	3
Replace Main Landing Gear Assy	80	3
Replace Wheel Assy (Main or Forward Landing Gear)	31	3
Replace Tire (Main or Forward Landing Gear)	32	2
Replace Brake Lining - Main Landing Gear	54	3
Repair Brake Assy - Main Landing Gear	45	1
Bleed Brake - Main Landing Gear	26	2
Replace Brake Assy - Main Landing Gear	41	3
Replace Disk - Main Landing Gear	50	3

TABLE IV - Continued

TASK DESCRIPTION	ELAPSED MAINTENANCE TIME (min)	QUANTITY PERSONNEL REQUIRED
ROTOR		
Replace Rotor Blade	53	3
10-Hour Inspection - Rotor Blade	33	2
Replace Shear Bearing - Rotor Hub	36	3
Replace Pitch Housing/Cross Beam Assembly	104	3
Replace Elastomeric Bearing - Rotor Hub	40	3
Replace Damper Assembly	42	2
Replace Rotor Hub	299	3
Adjust Pitch Link	15	2
Replace Pitch Link Bearings	30	2
Replace Pitch Link	21	3
Replace Bearing Condition Sensor	25	1
Replace Swashplate Assembly	332	3
CARGO HANDLING		
Replace Hoist Drive Assembly	25	2
Replace Cable Cutter Assembly	23	2
Replace Winch Assembly	45	2
Clean Winch Assembly	7	1
Replace Coupling Assembly	8	1
Clean Coupling Assembly	13	1
Replace Cables - Suspension System	30	2
Replace Control Panel	22	1
Replace Switch - Control Panel	21	1
Replace Position Lock Actuator	18	2
Replace Load Isolator	21	2
Replace Cable/Pulley - Support and Span Positioning System	38	1
Replace Hinged Section - Support and Span Positioning System	22	1

TABLE IV - Continued

TASK DESCRIPTION	ELAPSED MAINTENANCE TIME (min)	QUANTITY PERSONNEL REQUIRED
APU (AIRBORNE)		
Service APU (oil)	12	1
Replace APU Assembly	83	3
DRIVE		
Replace Forward Rotor Transmission	718	3
Replace Aft Rotor Transmission	756	3
Replace Combining Transmission	257	3
POWER PLANT		
Replace Outboard Engine (No. 1 or No. 3)	148	3
Replace Center Engine (No. 2)	155	3
Replace Exhaust Device (Typ)	37	2
Replace Engine Air Inlet Particle Separator (No. 1 and 3 Engine)	51	3
Replace Engine Air Inlet Particle Separator (No. 2 Engine)	47	3
Replace Tail Pipe (Typ)	67	3
Replace Ejector (Typ)	83	3
AIR COND. PRESS. & SURFACE ICE CONTROL		
Troubleshoot Environmental Control Unit on A/C	15	2
Troubleshoot Environmental Control Unit in Shop	15	2
Replace Environmental Control Unit	55	3
Replace Chemical, Biological, Radiological (CBR) Filter	49	3

TABLE IV - Continued

TASK DESCRIPTION	ELAPSED MAINTENANCE TIME (min)	QUANTITY PERSONNEL REQUIRED
ELECTRICAL POWER SUPPLY		
Replace Generator (Aft ATD Mounted)	51	3
Replace Generator (Aft Xmsn Mounted)	70	3
Replace Generator (Fwd Xmsn Mounted)	70	3
Replace Battery	18	3
Charge Battery	33	1
Functional Check All Exterior Lights	18	2
Repair Wiring (Typical)	45	2
HYD PNEUM POWER SUPPLY AND DISTRIBUTION		
Replace Hyd Power Pack (Fwd Xmsn Driven)	48	3
Replace Hyd Power Pack (Aft Xmsn Driven)	51	3
Replace Hyd Power Pack (ATD Driven)	51	3
Service Hydraulic Fill Module	12	1
Functional Test Hydraulic Subsystem	40	2
Replace Air Turbine Motor (Fwd Pylon)	55	3
Replace Air Turbine Motor (Aft Pylon)	76	3
Replace Air Turbine Motor (Hoist)	59	3
Replace Heat Exchanger	66	3
FUEL		
Service Fuel Sys (Press. Fueling Method)	12	2
Service Fuel Sys (Gravity Method)	39	2
Service Fuel Sys (Suction Method)	23	2
Defuel Aircraft (Through Gravity Filler Caps)	33	2
Defuel Aircraft (Through Defueling Valves)	17	2
Defuel Aircraft (Using A/C Fueling Reel)	24	2
Clean Fuel System	283	2
Pressure Test Fuel Cell	199	2
Replace Fuel Cell	215	2
Calibrate Fuel Qty Indic Sys	90	2

TABLE V. HLH GSE REQUIREMENTS FOR A SINGLE NINE AIRCRAFT COMPANY DEPLOYED AT THREE OPERATIONAL SITES

RQMT. NO.	NOMENCLATURE	CLASSIFICATION: AVAILABLE AS-IS QTY	AVAILABLE AS-IS FSN	NEW QTY	NEW EST UNIT PRICE	NOTE
3	Sling - Swashplate	-	-	2	870	2
4	Sling - Rotor Blade	-	-	3	5000	3
P5	Sling - Engine	-	-	3	*	3
6	Sling - APU	-	-	3	640	3
7	Lifting Eye/Sling QTCU or Aft Pylon	-	-	3	560	3
8	Sling - Stub Wing/Fuel Cell	-	-	1	370	1
10	Sling - Nylon, Multi-Purpose	-	-	4	265	4
11	Bomb Hoist (Aero 14B)	3	R1095-216-2334-S210	-	-	3
12	Adapter - Rotor Head	-	-	2	3120	2
13	Adapter - QTCU	-	-	2	3220	5 1
14	Adapter - Combining Xmsn	-	-	2	2320	5 1
P15	Adapter - Engine Package	-	-	6	1720	5 3
17	Truck, Lift, Wheel Change	2	1720-293-3849	-	-	2
19	Adapter - Cargo Winch	-	-	2	2800	5 1
23	Dolly - Transport, Rotor Blades	-	-	3	5000	3
25	Jack - Tripod Adjustable Height (3)	1 Set	1730-391-7946	-	-	1
26	Jack - Axle (3) 1 Reqd		5120-203-4697	-	-	2
	2 Reqd	2 Sets	5120-544-5648			
27	Trailer - Transportation Model 3060	6	P/N 106281 Air Logistics Corp.	-	-	5 3
30	Tool Set - Blade Fold	-	-	0	N/A	6
31	Power Unit, Propeller Shaft	2	5120-337-9652	-	-	2
32	Cleaning Equipment	3	4920-986-0809	-	-	3
33	Adapter - Cargo Winch Spool	-	-	1	1800	1
34	Centering Blocks - Boost Actuator	-	-	2	660	2
37	Spray Outfit Type MB-3	3	1730-529-8885	-	-	3

TABLE V - Continued

RQMT. NO.	NOMENCLATURE	CLASSIFICATION: AVAILABLE AS-IS QTY	AVAILABLE AS-IS FSN	NEW QTY	NEW EST UNIT PRICE	NOTE
39	Sling - Combining Xmsn	-	-	1	650	1
42	Trailer - Transportation Model 3000	4	1740-516-7930	-	-	5 2
43	Hoist, Winch, Lug-All Model 238-R-M	4	3950-947-0457	-	-	4
45	Adapter - Swashplate	-	-	2	1530	2
46	Tractor, Wheeled Aircraft Towing	3	1740-580-7990	-	-	3
47	Sling - Cargo Winch Assembly	-	-	1	1122	1
49	Air Cylinder, Portable	3	1730-625-6872	-	-	3
54	Dispenser, Hydraulic	3	4920-245-1832	-	-	3
57	Test Stand, Hydraulic (4 Stands/Sets)	1 Set	4920-141-8801	-	-	1
58	Tank and Pump Unit, Jet Oil Servicing	3	4930-628-1121	-	-	3
64	Wrench, Crow-foot	3	5120-184-8385	-	-	3
65	Press, Arbor, Hand Operated	1	3444-163-4338	-	-	1
66	Adapter Set - Arbor Press	-	-	1	900	1
69	Lifting Tool - Generator	-	-	2	549	2
71	Removal Tool - Wheel Brake Lining	-	-	3	240	3
73	Charger, Battery	1	6130-985-8157	-	-	1
74	Wrench - MLG Oleo Retaining Nut	-	-	1	285	1
75	Gauge, Air Pressure Type GMU-25/E	1	4935-793-1677	-	-	1
76	Multimeter, Type AN/PSM 4C	3	6RD-6625-893 3779	-	-	3
77	Auxiliary Power Unit	1	4920-938-8363	-	-	1
78	Compressor, Reciprocating, Power Driven	1	4310-764-2316	-	-	1
79	Wrench - FLG Oleo Retaining Nut	-	-	1	285	1
80	Assembly Fixture - Pitch Link	-	-	1	1430	1
86	Tow Bar - Universal	3	1730-640-8080	-	-	3
89	Auxiliary Power Unit	1	6115-553-8937	-	-	3
91	Long Handled Scrub Brush	3	7920-685-3969	-	-	3
		3	7920-926-5146	-	-	3

TABLE V - Continued

RQMT. NO.	NOMENCLATURE	CLASSIFICATION AVAILABLE AS-IS QTY	FSN	NEW QTY	EST UNIT PRICE	NOTE
95	Tool, Contact Insertion	3	5120-765-3689	-	-	3
96	Tool, Contact Extraction	3	5120-765-3688	-	-	3
97	Tool, Crimping	3	5120-919-8078	-	-	3
98	Tool, Typ-Rap	3	5120-985-5907	-	-	3
99	Heater Gun	3	4940-785-1162	-	-	3
100	Test Set, Insulation Breakdown	3	6625-765-9079	-	-	3
101	Test Set, Dynamic Absorber	-	-	1	6030	1
104	Adapter - Pitch Housing/Cross Beam Assy	-	-	1	1935	1
105	Tensionometer, Cable	3	6635-647-3371	-	-	3
109	Regulator, Pressure, Compressed Gas	1	6680-551-1094	-	-	1
110	Manometer	1	6685-526-5325	-	-	1
111	Test Set, Liquid Quantity	1	4920-834-1453	-	-	1
113	Combustible Gas Indicator Set, Portable	1	6665-664-4650	-	-	1
P114	Engine Adapter - Bomb Hoist	-	-	3	380	3
115	Davit, Maintenance, Lightweight	-	-	3	800	3
116	Wrench Set, Crow Foot	1	5120-181-6747	-	-	1
117	Platform, Maintenance, Type B-1	3	1730-390-5618	-	-	3
118	Adapter Set - Rotor Xmsn Mounting Bolts	-	-	2	2000	2
119	Crane, Truck	3	N/A	-	-	3
P120	Depth Gage - Torquemeter Pickup	-	-	2	*	2
P121	Test Set - Torquemeter Runout	-	-	1	*	1
P122	Test Set - Thermocouple	-	-	1	*	1
P123	Test Set - Electrical Components Checkout	-	-	1	*	1

TABLE V - Continued

RQMT. NO.	NOMENCLATURE	CLASSIFICATION AVAILABLE AS-IS QTY	FSN	NEW QTY	EST UNIT PRICE	NOTE
P124	Rigging Fixture - Variable Compressor Vane Linkage	-	-	2	*	2
P125	Trim Fixture - Fuel Control	-	-	3	*	3
P126	Boroscope	2	N/A	-	*	2
P127	Plug - Shorting, Permanent Magnet Generator (PMG)	-	-	3	*	3
P128	Adapters/Nozzles, Engine Wash	-	-	3	*	3
P129	Adapters/Nozzles, Compressor Cleaning	-	-	1	*	1
P130	Adapter - Lifting, Compressor Case Half	-	-	2	*	2
P131	Puller - L.P. Turbine Oil Tube Filter	-	-	3	*	3
P132	Puller - Accessory Gear Box Seal	-	-	3	*	3
P133	Puller - Fuel Pump Drive Oil Seal	-	-	3	*	3
P134	Adapter - Accy Gear Box Assembly	-	-	2	*	2
P135	Component Stand - Universal	-	-	3	*	3
P136	Adapter - Combustor Assembly	-	-	2		2
P137	Adapter - Power Turbine Assembly	-	-	3	*	3
P138	Test Set - Electronic Control and Pwr Mgmt with Adapter Cables	-	-	1	*	1
P139	Rigging Pins - Inlet Guide Vanes and Fuel Control	-	-	3	*	3
P140	Adapter - Socket, Gas Generator Rotation	-	-	2	*	2
P141	Trim Fixture - Remote	-	-	3	*	3

TABLE V - Continued

RQMT. NO.	NOMENCLATURE	CLASSIFICATION: AVAILABLE AS-IS QTY	AVAILABLE AS-IS FSN	NEW QTY	NEW EST UNIT PRICE	NOTE
P142	Test Set - Fuel Control/Compressor Variable Geometry (CVG) Position	-	-	1	*	1
P143	Wrench - Spline, L.P. Turbine Rotor Coupling Nut	-	-	3	*	3
P144	Puller - L.P. Turbine Coupling Nut Lock	-	-	3	*	3
P145	Adapter Set - Power Turbine Support	-	-	3	*	3
P146	Fixture - Setting, Power Turbine Rotor Axial Position	-	-	3	*	3
P147	Wrench - Spanner, Power Turbine Rotor Bearing Retaining Nut	-	-	3	*	3
P148	Holder - Power Turbine Rotor	-	-	3	*	3
P149	Holder - Power Wrench to Power Turbine Rotor	-	-	3	*	3
P150	Adapter Set - Power Turbine Removal	-	-	3	*	3
151	Wrench - Spanner, Rotor Blade Retention Pin Nut	-	-	3	185	3
152	Wrench - Antirotation, Rotor Blade Retention Pin	-	-	3	330	3
153	Guide Pin - Rotor Blade Retention Pin	-	-	3	140	3
154	Test Set - Supervisory Panel	-	-	1	3,000	1
155	Test Set - Ice Protection Systems	-	-	1	15,000	1
156	Test Set - Master Caution Panel	-	-	1	400	1
			TOTAL		$118,550	

TABLE V - Continued

NOTES:

① One unit (or set) only for all three sites - low usage rate.

② One unit (or set) at main site and one floating between the two satellite sites. Usage rate requires more than one unit.

③ One unit (or set) at each of the three sites. High usage rate and/or multiple use item.

④ Two units (or sets) at the main site and one at each satellite site.

⑤ Required in pairs for component replacement - one to handle the old component and one to handle the new component.

⑥ Quantity as required by environmental conditions or long-term storage.

* Costs of these power plant items are determined by the power plant manufacturer and are not available at this time.

ALTERNATE APPROACHES TO GSE CONCEPTS

HOISTING DEVICE

The Aircraft System Requirements Document (ASRD) contains the following requirement: "A hoisting device powered by the auxiliary power system will be provided for use in removal and replacement of all heavy components. The airframe will be fitted with hard points and other appropriate attachments to receive the hoisting device for use in removal and replacement of heavy components." This requirement was assumed to cover removal and replacement of rotor blades, rotor hub, swash-plate, transmissions, engines, and the APU as a minimum and, therefore, should provide the capability of lifting items ranging in weight from 350 lb to 8000 lb to a hook height of 40 to 45 feet. This study was not limited to the above concept, however, but also includes two additional equipment approaches for meeting the requirement for removal and replacement of major components.

Following is a discussion of three concepts considered.

1. Aircraft Mounted Hoisting Device (ASRD Requirement)

   The primary objective of this equipment approach is to provide a compact, lightweight unit which is easily deployable to enhance maintenance self-sufficiency of the aircraft during operations remote from fixed base support facilities.

   A specific design concept has not been selected to meet this requirement; however, Figures 11 and 12 illustrate design approaches which could be developed. Figure 10 is a concept which employs a lightweight modular A-frame and ball screw actuators to facilitate self-erection and positioning of the A-frame. Figure 11 depicts the maintenance crane developed for use on the CH-47 helicopter.

   Regardless of the specific design approach adopted, the item must be 'self-erecting' or modular to the extent that it can be readily set up by maintenance personnel using hand tools and/or APU power only. The most obvious difficulty in developing an acceptable airframe mounted hoisting device is the development of a lightweight winch capable of lifting the 8,000-lb load. There is no suitable inventory item for this application, and commercially available equipment is much too heavy for manual setup. For example, electric powered winches capable of lifting

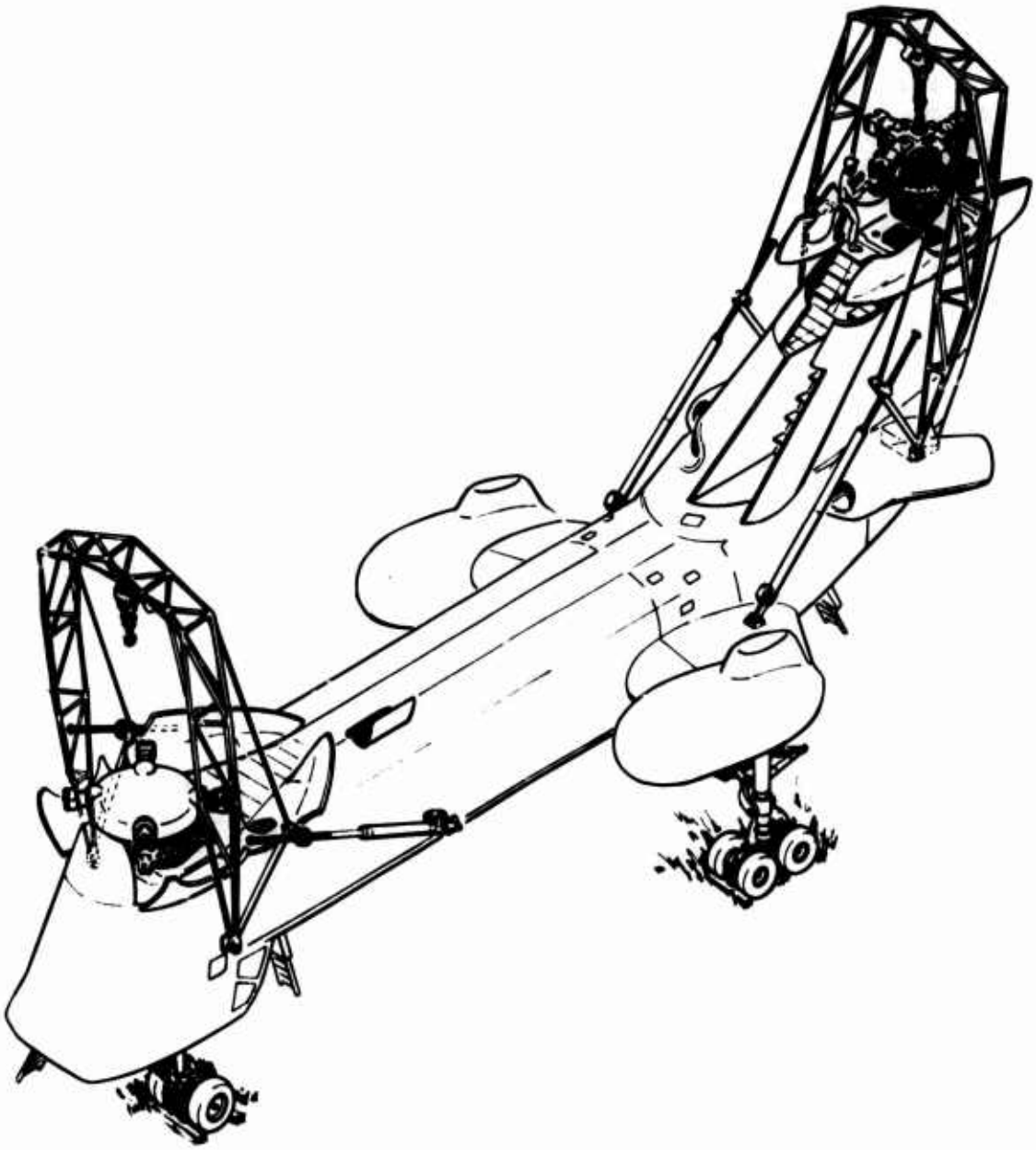

Figure 10. HLH Hoisting Device Concept.

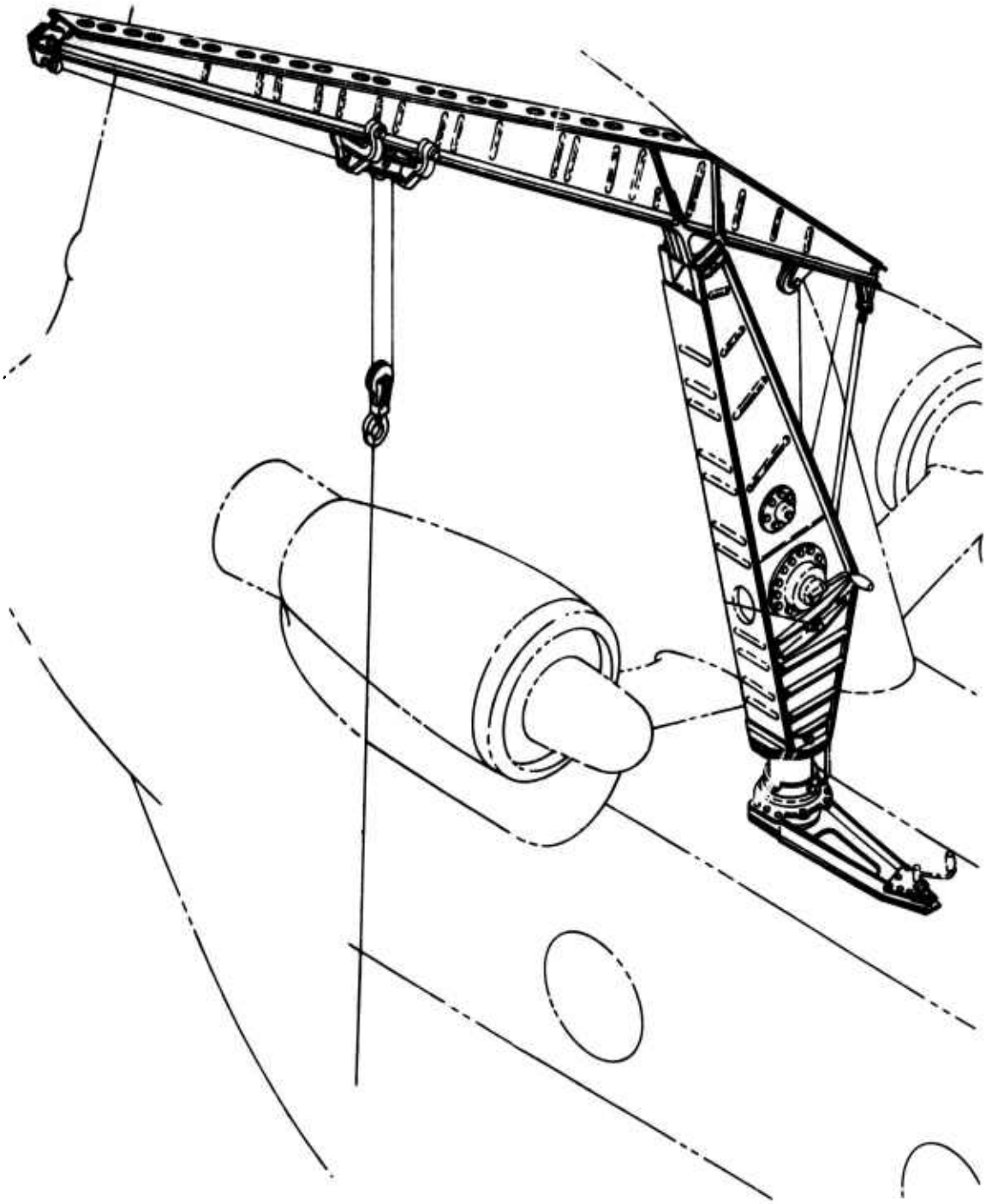

Figure 11. H-47 Maintenance Crane (Fuselage Mounted).

8,000 lb to a 40-ft hook height presently weigh from 850 lb to 1300 lb or greater. Pneumatic powered winches are available up to approximately 6,000 lb capacity, but the weight of these units is several hundred pounds. Even a manual powered winch capable of lifting 8,000 lb weighs at least 260 lb and has the further drawback of an operating speed of only 1/2 ft per minute. In summary, winch state of the art must be advanced if a useful, hand-erectable aircraft mounted hoisting device is to be developed.

2. HLH Cargo Handling System

The objective of this approach is to provide maintenance self-sufficiency through use of the winch system from the HLH cargo handling system and thereby preclude development and/or procurement of new hoisting equipment. Cursory analysis indicates this approach is by far the least feasible of the three considered. Reasons are:

- Substantial modification and rigging of the cargo handling system is required to adapt it to this application.
  - Additional winch controls must be provided to permit the operator to be near the component being handled.
  - The coupling (hook) must be replaced with a smaller, lighter, more easily handled hook.
  - The dual cable rated for an ultimate strength of approximately 75,000 lb per cable is difficult to handle (8,000 lb is the maximum load in this application).
- Pulleys, brackets, outriggers/davits must be located throughout the aircraft to facilitate cable runs to the various hoisting areas.
- Structural hard points and access panels must be incorporated throughout the aircraft to accommodate the pulleys, brackets, cable, and davits.
- The probability of maintenance errors/damage to the cargo handling system is greatly increased.
- Setup or changeover time is anticipated to far exceed that of the other approaches considered.

3. Mobile Crane

The objective of this approach is to use existing inventory or commercially available equipment and thereby preclude the requirement for development of new equipment. A number of mobile cranes with 8,000-lb lift capability are available in the military inventory; however, those which also provide the capability of raising a load to a 40-ft hook height are extremely large and are not considered appropriate for this application. There are many commercially available units, however, which will readily satisfy the HLH requirements. The Pettibone Model 15 Multikrane (see Figure 12) is an example. This item can lift 17,000 lb to a hook height of approximately 47 ft, weighs approximately 25,000 lb, and is self-propelled. Principal dimensions are shown in Figure 13.

Use of a mobile crane and auxiliary equipment provides the capability for a number of maintenance tasks that cannot be readily performed with the other hoisting equipment considered. For example, access to all external fuselage and blade areas for inspection, repairs, cleaning, etc., can be provided through use of a personnel bucket mounted on the crane boom.

The mobile crane appears to be the most practical approach for lifting requirements at hard sites, but does involve more difficulty in transportation to remote sites than the other equipments considered.

Trade-Offs Required

Time and resources allocated for this GSE study do not permit analysis of the HLH maintenance hoisting requirement in sufficient detail to complete the equipment selection process. However, limited preliminary cost data was collected which provides some interesting cost comparisons of existing items of hoisting equipment. For example, the selling price of the Pettibone Model 15 mobile crane is approximately $30,000; the selling price of the Pettibone Model 10-F (a mobile crane with lift capability of 10,000 lb and maximum hook height of 22 ft 9 in.) is approximately $16,000; the selling price of the maintenance crane (maximum lift capability of 5,000 lb) developed for the CH-47 helicopter is approximately $35,000; and the selling price of a trailer-mounted unit (see Figure 14) (3,000-lb lift capability to a maximum hook height of 25 ft) developed for the H-53 helicopter is approximately $63,000.

Figure 12. Pettibone Model 15 Multikrane.

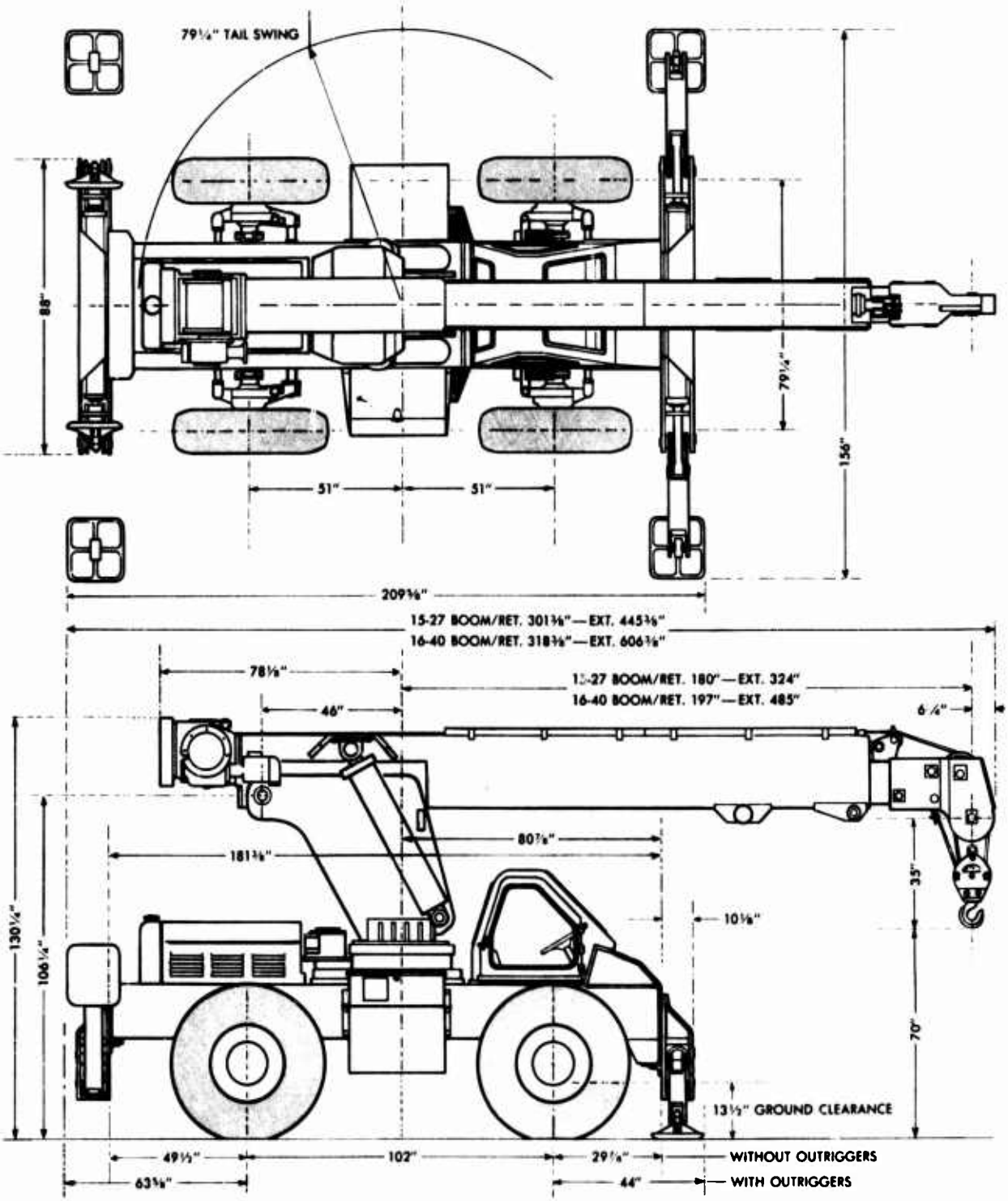

Figure 13. Pettibone Model 15 Multikrane (Principal Dimensions).

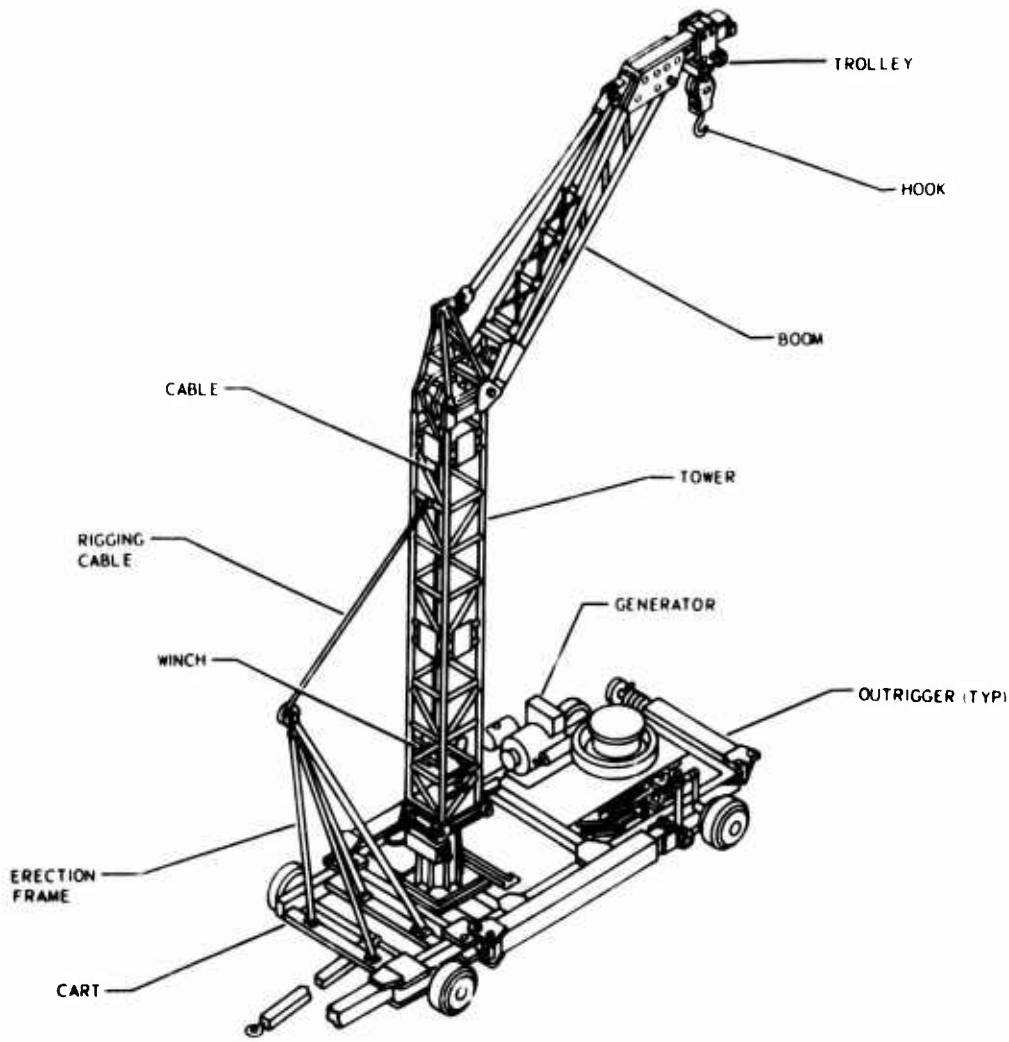

Figure 14. H-53 Maintenance Crane.

From a unit cost standpoint only, it would appear that the most practical way to handle HLH maintenance hoisting requirements is to modify the existing Pettibone Model 10-F unit to incorporate a telescoping boom and outrigger to provide the desired 45-ft hook height.

Such limited cost data is insufficient to substantiate selection of any item as the most appropriate.

Therefore, it is recommended that at least the three equipment approaches discussed herein be subjected to a rigorous, in-depth evaluation to identify and trade off such parameters as:

- Deployment requirements
- Frequency of major component replacement
- Personnel requirements (quality and skill levels)
- Elapsed time for setup/erection and use
- Auxiliary equipment required
- Aircraft hard points, fittings, and/or structural provisions required
- Development time required
- Development cost required
- Unit cost of each item
- Other potential HLH support applications for each item
- Anticipated maintenance requirements for the hoisting device

Thorough and timely trade off of the above considerations should result in selection of the equipment approach which best meets the HLH maintenance hoisting requirements.

BLADE FOLD VS. BLADE REMOVAL

The alternatives of blade folding versus 'blade removal' have been considered throughout this study. For the helicopters in service today, blade folding has proven to be a practical means of reducing the envelope required for shipping and storage and for securing the blades for protective purposes. For shipboard operation, blade folding capability, either manual or powered, has been a mandatory requirement due to limited space available on flight deck or hangar decks for flight operations, deck towing and handling, stowage or maintenance.

A preliminary analysis comparing manual (power assisted) blade folding against blade removal for the HLH has been completed.

The results are shown below and represent requirements for a single aircraft:

- Time requirements (two four-man crews)

  - Fold and unfold 7 blades* - 5.84 elapsed hours (pure time)
  - Remove and install 7 blades* - 4.60 elapsed hours (pure time)

  * One blade is positioned over the fuselage - removal and/or folding is not required.

- GSE requirements

  Blade Folding

  - Retention Pin Removal Tools (2 Sets)
  - Overhead Lifting Device (2 ea.)
  - Blade Tip Lifting Boot (2 ea.)
  - Blade Pitch Angle Lock (2 ea.)
  - Blade Log Angle Positioning and Locking Device (4 ea.)
  - Blade Fold Actuator (2 ea.)
  - Blade Fold Position Locking Device (7 ea.)
  - Blade Securing Device for High Wind Operation (8 ea.)
  - Blade Fold Antiflap Restrainer (4 ea.)

  - Retention Pin Removal Tools (2 Sets)
  - Overhead Lifting Device (2 ea.)
  - Blade Sling (2 ea.)
  - Blade Shipping Containers (7 ea.) or Blade Stowage Cradle To Hold 4 Blades (2 ea.)

- Aircraft Configuration Requirements: Following is a list of component and aircraft provisions required to facilitate blade folding:

  - Blade pitch angle locking lugs: To lock individual blade pitch or swashplate position (rotor system).

  - Rotor positioning gearing: To properly position the rotor in azimuth (transmission system).*

  - Rotor lock: To lock rotor azimuth (transmission system).

  - Rotor azimuth indicator: To indicate proper rotor azimuth for folding (rotor system).

- Blade lag positioning and locking device attaching provisions (rotor system).

- Blade fold mechanism attaching lugs (rotor hub and rotor blades).

- Blade tip tie-down and securing fitting (rotor blades).*

- Rapid disconnect blade attachment bolt (rotor hub).*

- Blade fold positioning and locking device attaching provisions (rotor hub and rotor blades).

- Pilot control position indicator (collective pitch, longitudinal and lateral cyclic stick and rudder position).

- Electrical and hydraulic power for blade pitch control system.*

- Fuselage attachment points for blade securing fittings.

  * With the exception of the asterisked items, all of the above provisions are required solely for blade folding operations.

The previous comparison indicates an apparent time saving and a decided reduction in GSE required for blade removal in lieu of blade folding. However, it is recommended that conditions/circumstances (including anticipated frequency of occurrence) requiring blade folding or blade removal be thoroughly assessed. Built-in provisions on the aircraft and the required GSE should be defined in detail, and a detailed cost analysis should be completed for each approach.

TORQUE APPLICATION

Installation of mounting bolts for the forward and aft rotor transmissions requires application of approximately 2,990 ft lb of torque, wet application. The breakaway requirement for transmission removal is estimated as 4,300 ft-lb or less.

The Model 8100 Torque Multiplier, manufactured by B. K. Sweeney Manufacturing Company, Denver, Colorado (see Figure 15) and available in the Army inventory under FSN 5120-337-9652, has been identified as suitable for this torque application (see Requirement No. 31, Appendix I, GSE Requirements Index). The Model 8100 weighs approximately 45 lb, employs a 3/4-in. square female input drive and a 43-

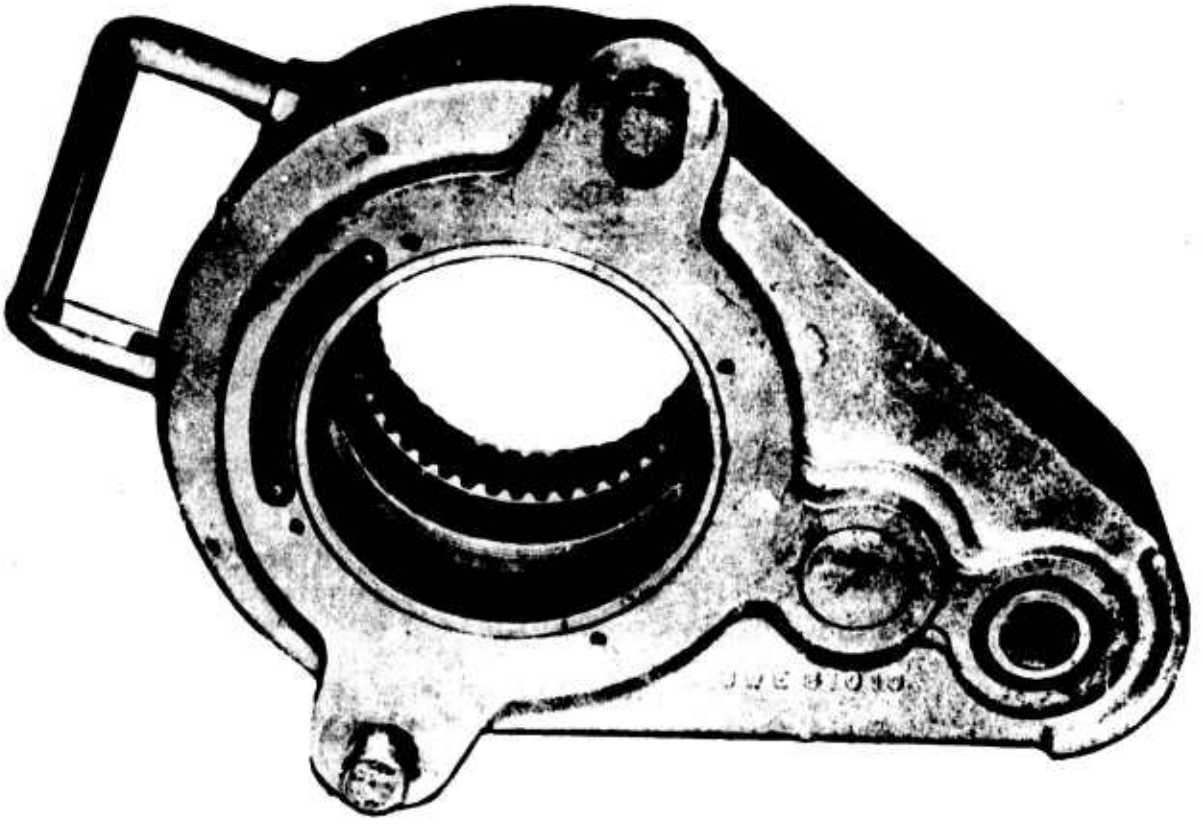

DIMENSIONS: 17-5/8" x 12-3/8" x 7-3/8" **WEIGHT:** 45 lb

Figure 15. Torque Multiplier (B.K. Sweeney Mfg. Co.).

tooth internal spline output drive. It provides an 11.2:1 power ratio to produce a maximum output of 7,500 ft-lb at 670 ft-lb maximum input.

Torque may be applied to the Model 8100 Torque Multiplier through a conventional 3/4-in. square drive torque wrench or socket drive. A handle extension or a stack-up employing a smaller torque multiplier on the input drive is required to reduce manual effort to what is considered a reasonable level, from a human factors engineering standpoint, when high torque must be generated. For example, a 110-lb manual effort must be applied to the handle of a snap-on Model TEP-353L torque wrench (3/4-in. square drive, 350-ft-lb maximum range, 29-1/2-in. handle length) when used with the Model 8100 Torque Multiplier to generate the 2,900 ft-lb of torque required for installation of rotor transmission mounting bolts. Use of a comparable snap-on wrench with a 42-in. handle requires 77 lb manual input, and a 62-in. handle length reduces the manual input requirement to 50 lb.

The Model 8100 Torque Multiplier does not provide capability for direct readout of applied torque. Readout must be accomplished through calculation or through the use of conversion factors applied to indicator readings from the torque wrench or multiplier used for power input.

In addition to equipment necessary for power input and readout, a number of additional items of auxiliary equipment are required when using the Model 8100 Torque Multiplier. These include:

- An appropriate socket or adapter to transmit torque directly to the item being torqued
- A splined adapter to interface between the splined output drive of the Model 8100 and the socket or adapter
- An adapter to secure the Model 8100 in place and react the input power

The Model 8100 Torque Multiplier and similar items are the most commonly used equipment for high torque application in the military maintenance environment. However, the facts presented above indicate that a great deal of human effort can be required, and the chance of error in determining the actual torque applied is an ever-present possibility when using this type of equipment.

A limited industry search has revealed a number of commercially available torque multipliers (mechanical, hydraulic, or pneumatic powered) which offer one or more of the following notable advantages over the Model 8100 and similar equipment:

- Continuous direct output torque indication provided by a gauge on the face of the unit
- Only 5 to 15 ft-lb of input torque required up to maximum output
- Square drive output minimizes cost of output and reaction adapters
- May be operated by hand, electric drill, or air motor
- 5,000 to 6,000 ft-lb output from units weighing 35 to 40 lb

Figures 16, 17, 18 and 19 illustrate some of the types of torque wrenches currently available.

Detailed information is still being gathered to provide a sufficient data base for evaluation and comparison of this equipment. However, from the limited data collected to date, it is apparent that there are better ways of generating high torque than the methods most commonly applied today. Therefore, it is recommended that:

- A thorough industry search be conducted to identify and catalog all methods of torque application which may be appropriate to aviation maintenance
- Research be conducted to identify and document usage experience with respect to equipment accuracy, reliability, durability and maintenance requirements
- A comprehensive analysis be conducted of torque requirements for the HLH
- Trade-offs and development be performed to define and/or produce equipment which will provide accurate and safe torque application with minimum human effort and simple low cost auxiliary equipment

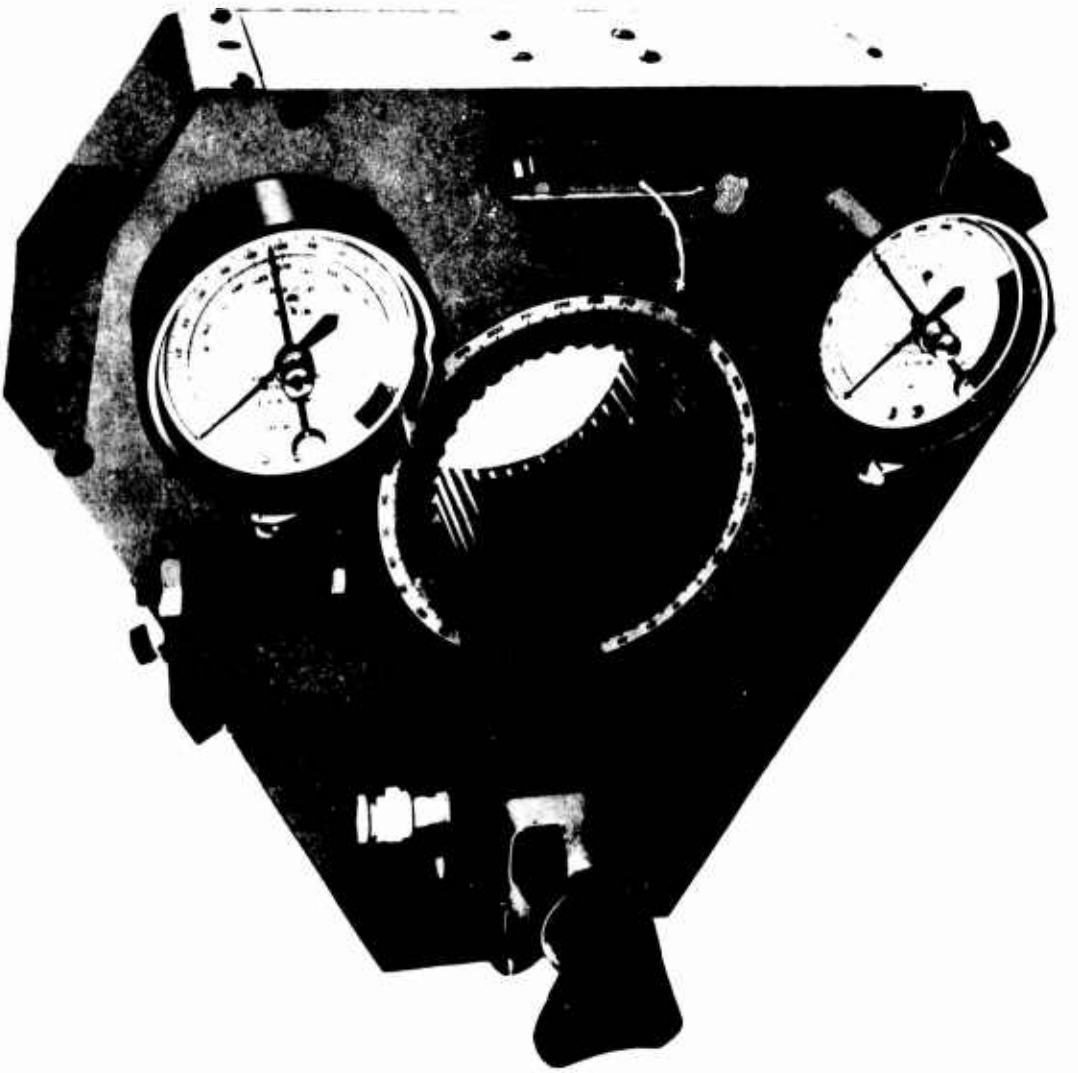

Figure 16. Hydraulic Torque Wrench
(Advanced Hydraulics, Inc.).

PART NO.	CAPACITY	SIZE (INCHES)
PD-1201	0 to 1200 ft-lb	5 3/4 X 6½ X 8 3/4
PD-2501	0 to 2500 ft-lb	7 X 8 13/32 X 10 7/8
PD-6501	0 to 6500 ft-lb	7 3/8 X 10 X 14½
PD-20001	0 to 20000 ft-lb	11 X 15 3/4 X 20

Figure 17. Mechanical Torque Wrench (Power Dyne Corporation).

MODEL	PT-1	PT-2	PT-5	PT-6	PT-8	PT-10	PT-12
RANGE MAX. ft-lb	500	1250	2000	2500	5000	12500	25000
DRIVE (inches)	3/4	1	1	1½	1½	2½	2½

Figure 18. Pneumatic Torque Wrench (Nasco, Inc.).

Model Number	Capacity Ft–Lbs.	A"	B"	C"	D"	E"	F"	Wt. Lbs.	Rotation Per Stroke
HW-1	1,000	1	2½	7½	3	4	1¼	7	30°
HW-5	5,000	1½	4	14	4½	6½	2¼	25	30°
HW-10	10,000	2	4¼	15½	5	8	2½	40	30°
HW-15	15,000	2½	5¼	17	6	9	2½	60	30°
HW-25	25,000	3	6	19½	7	10½	4	90	30°
HW-50	50,000	3½	7	21	8½	12	5½	160	22½°
HW-100	100,000	4½	8¼	22½	10½	14	6½	300	22½°

Figure 19. Hydraulic/Pneumatic Torque Wrench (Torque and Tension Equipment, Inc.).

USE OF FORKLIFT EQUIPMENT VERSUS OVERHEAD LIFTING DEVICES

Forklifts are being used extensively throughout industry and by the armed forces. Use of a forklift, fitted with proper adapters or slings, appears feasible for the following maintenance requirements:

- Replace quick engine change (QEC) packages
- Replace cargo winch assembly
- Replace main landing gear assembly
- Replace load controlling crewman's pod
- Replace rotor blades
- Position a small two-man maintenance platform to permit inspection and/or minor repair of all exterior fuselage components (such as in the 100-300 lb weight category) which are externally accessible such as environmental control unit (ECU), engine exhaust device, engine tail pipe, and work platforms.

Furthermore, use of forklift equipment appears to have certain advantages over cranes or hoists which support the loads from a point above the component being handled.

These advantages include:

- Positive control of the component being replaced since the lifting adapter can be firmly secured to the forks. This eliminates the bouncing and pendulum action which is present in some degree when an object is being handled by a sling and overhead hoist.

- Multipurpose application - component replacement, workstand support, towing operations.

- Transportable by sling load to austere sites without requiring disassembly.

- Utilization of the forklift, with applicable adapter/slings could be in addition to or in lieu of certain GSE requirements identified in the investigation. The following GSE listed in Appendix I would be affected: Requirements P15, 19, 37, 43, 47 and 117.

It is recommended that an analysis be performed to:

- Identify forklifts suitable for HLH maintenance

- Identify related adapters required for forklift application for each maintenance task

- Prepare time line, cost and personnel requirements to compare forklift application with overhead lifting methods

BLADE HANDLING CONCEPTS

A major HLH maintenance requirement will be the replacement and handling of the rotor blades. The blades are approximately 41 ft long with a 40-in. chord length and weigh about 750 lb each. With the landing gear in normal position, the forward blades are approximately 23 ft above ground level at the root end and the rear blades are approximately 32 ft above ground level.

The specific blade handling actions which must be performed most frequently include blade removal from and replacement on the aircraft, in shipping containers, on storage/transportation racks and dollies, and on workstands. In addition, blades must be turned to the proper chordwise position for placement in storage racks or to facilitate inspection and repair. Blade removal and replacement is the most complex single operation considered, since it involves vertical motion as well as horizontal motion to position the blade with respect to the hub for pin installation, and to clear the blade/hub interface after pin removal, and may involve rotation of the blade for proper chordwise positioning. Blade handling concepts must permit freedom of motion and application of force in the directions described above.

Several approaches appear feasible for blade removal/installation and handling as follows:

- Lifting Sling and Crane - A mobile crane and a lifting sling have been identified as suitable for this task. The crane used for rotor blade replacement could also be used for replacement of other components (rotor heads, transmissions, and quick transmission change units), but the lifting sling would be a special item of GSE for blade handling only. A means of rotating the blade from horizontal to vertical chordwise position can be incorporated into the sling design. This overhead lift concept provides a ready means of placing the blades directly into ground handling equipment or storage containers. This concept is most practical for fixed sites and is feasible for remote or austere bases depending on the mobility and transportability of the crane selected.

- Forklift and Cradle - Use of a forklift and cradle provides positive control of the blade, since the cradle can be firmly secured to the forks. This eliminates the need for guy lines at the blade tip and root end as required with the lifting sling and crane. The forklift can also be used for other component replacements although the cradle would be a special item of GSE used for blade handling only. The means to horizontally displace the blade and the means of rotating the blade from horizontal to vertical chordwise position must be incorporated into the cradle design. With this concept a sling and overhead hoisting method may be required to lift the blade from the cradle and place it in the ground handling equipment or storage container. Transportation of the forklift by sling load to austere sites without disassembly should be possible. However, mobility on soft terrain may require use of special high floatation tires.

- Stanray Lift Truck With Cradle - The Stanray lift truck is a commercially available self-propelled scissors type lift which raises a platform to a height of approximately 40 feet (see Figure 20). The platform is capable of approximately 5 feet of fore and aft movement and readily provides the means to horizontally displace the blade. Use of this lift truck with a cradle provides positive control of the blade since the cradle can be firmly secured to the platform. The cradle can include provisions for changing the blade from horizontal to vertical chordwise position. If this blade handling concept is used, a sling and an overhead hoisting method may be necessary to transfer the blade to ground handling equipment or storage containers. The Stanray lift truck is ideally suited for other maintenance tasks such as rotor blade inspection; APU removal, replacement, and servicing; engine removal and replacement; and cargo winch system maintenance. This unit is transportable by sling load to austere sites without disassembly but may require special high floatation tires for such service.

- Lift Trailer With Cradle - Trailer-mounted scissors type lifts (similar to the Stanray unit but lacking the self-propelling feature) are available which can raise a platform to a height of approximately 40 ft (see Figure 21). A powered vehicle is required for towing and positioning this trailer. Use of the trailer with a firmly secured cradle provides positive control of the blade. The cradle must be designed to provide the capability for horizontal blade displacement and can be designed to include blade chordwise

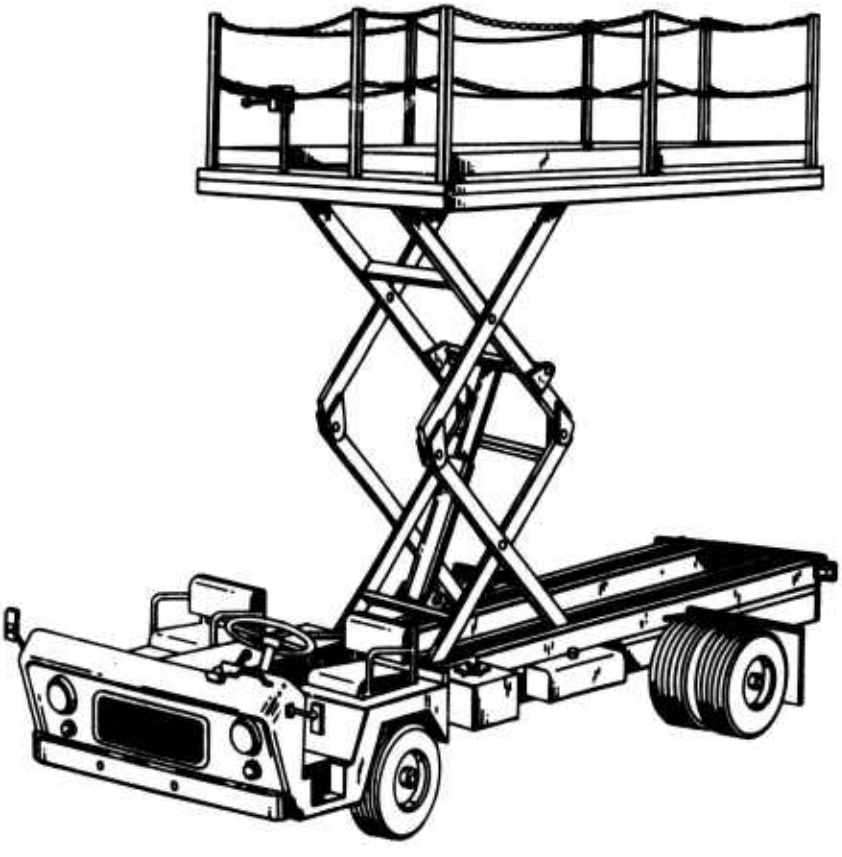

Figure 20. Stanray Lift Truck.

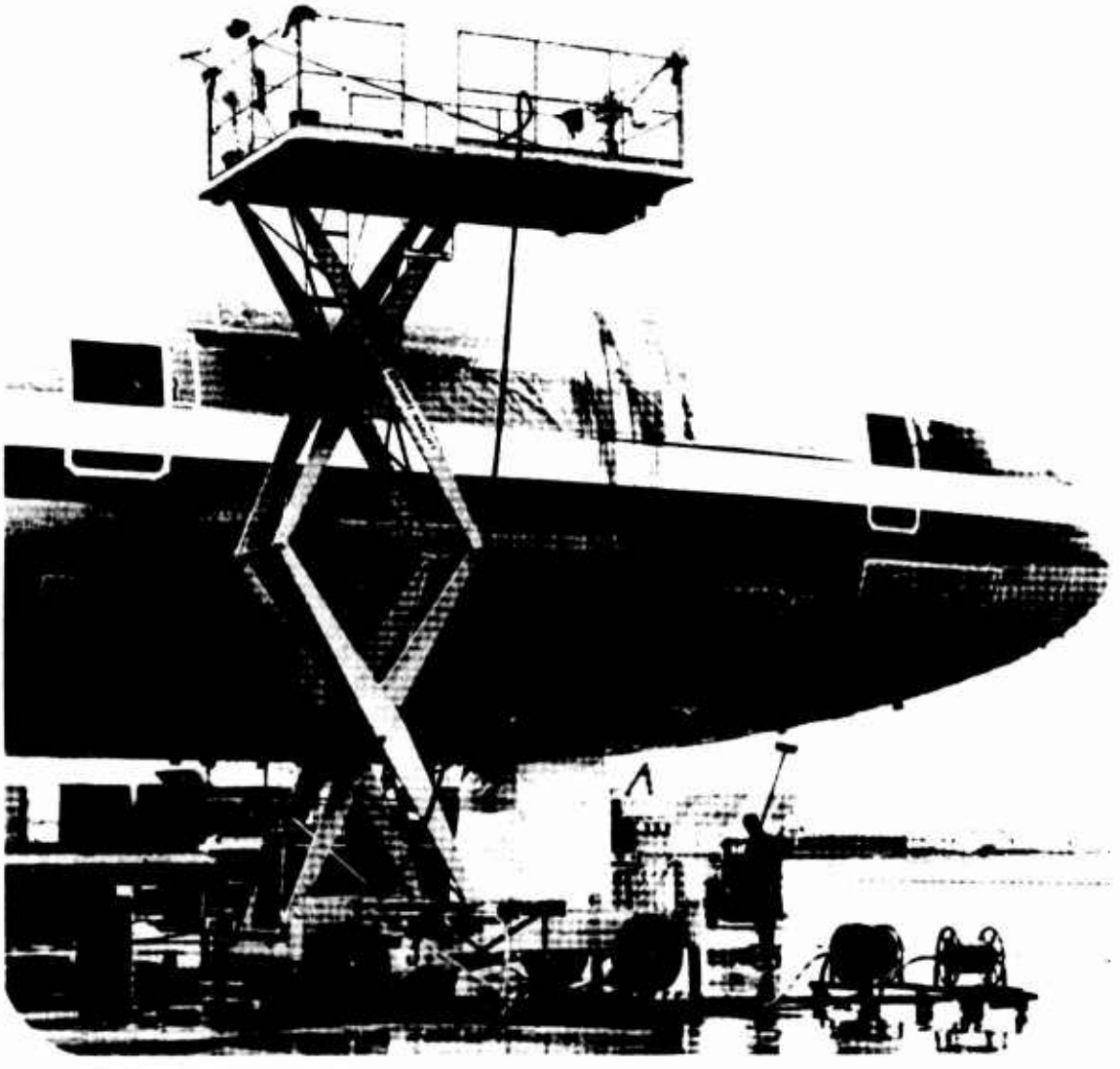

Figure 21. Trailer Mounted Scissors Lift (Selma Manufacturing Company).

position changes if required. With this concept a sling and overhead hoisting method is required to transfer the blade from the cradle to the ground handling equipment or storage container. The lift trailer can be used for performing maintenance in other areas of the aircraft. This unit is transportable by sling load to austere sites without requiring any disassembly.

Concepts for auxiliary items of rotor blade ground handling and storage equipment are as follows:

- Blade Sling - A simple cable sling equipped for positive 2-point attachment to or cradling of the blade is suitable for use with a crane for most blade lifting and handling requirements.

- Blade "Roll-Over" Sling/Cradle - A cradle/sling with provisions for blade "roll-over" (rotation about the longitudinal axis) is required for use in conjunction with the simple cable sling for certain blade handling operations. This cradle/sling provides the capability to change the chordwise position of the blade from horizontal to vertical and vice versa to facilitate blade placement in containers, racks, or workstands.

- Blade Cradle - A cradle is required to provide support for the blade when forklifts or lift trucks are used for blade lifting and handling. This cradle could provide "roll-over" and/or horizontal displacement capabilities.

- Reusable Shipping Containers - Reusable containers are required to protect the rotor blades during shipment. The containers could be multipurpose and serve such other functions as storage and handling. For example, the functions of the blade cradle described above could be incorporated in the shipping containers if such an approach were judged to be cost-effective.

- Blade Dolly - A special blade dolly with provisions for holding four blades has been identified as suitable for blade transportation and storage. The dolly would be equipped with pneumatic tires and could be towed by standard tow vehicles.

- Padded Flatbed Trailer - A standard flatbed trailer equipped with a padded rack to accommodate the blades can be used for blade transportation and storage.

- Padded Blade Rack - A simple padded rack, fixed or skid-mounted, can be used for blade storage.

In view of the numerous equipment approaches which appear feasible for rotor blade lifting, handling, and storage, it is recommended that a more detailed analysis be conducted. This analysis should be based upon specific definition of HLH deployment requirements including base description, aircraft quantities, and predicted utilization rates. More precise equipment definition and cost analysis can then be performed to provide the most efficient and cost-effective system for rotor blade lifting, handling, and storage.

TWIN RAIL VERSUS FLATBED UTILITY TRAILER

A long-established matching rail system for handling aircraft components (Air Logistics Corporation) has been considered in the maintenance concept for the HLH. The system will use standard twin rail trailers of the type presently used for CH-47 and CH-54 maintenance, and special adapters for mounting transmissions, engines, rotor heads, and the cargo winch. Additionally, for maximum utility, shop maintenance areas and storage areas would be set up with twin rail workstands and storage stands matched to the standard trailers. Components can then be rolled from trailer to workstand and vice versa with no lifting required. Functionally, the removal/replacement operation for any component would entail securing a special adapter on a trailer, moving the trailer to the location of the component, lifting the component onto the adapter and securing in place, and finally moving the trailer to the area for unloading, either at the aircraft where the component would be hoisted from the adapter for installation, or at a shop/storage area where the loaded adapter would be rolled from the trailer onto a stand, or where the component would be lifted from the adapter into a storage container. Figure 22 shows the twin rail trailer and a transmission adapter currently used for the CH-47 helicopter.

The twin rail system is most practical at a relatively permanent maintenance complex where extensive shop buildup and/or repair is accomplished. Application is far less practical where only removal/replacement operations are performed. For example, where little or no preinstallation buildup is required, intermediate component handling is eliminated if the component is lifted directly from the shipping container for aircraft installation. On the other hand, if buildup is required, the twin rail trailer and adapter can serve as a buildup stand and also provide a convenient means of transferring major components from shop to aircraft while eliminating any in-shop lifting requirement.

There are certain considerations which preclude total application of HLH component ground handling and shop buildup requirements to the twin rail concept. For example, the configuration and dimensions of the HLH combiner transmission permit adapter

Figure 22. Twin Rail Transportation Trailer.

design so that the transmission can be cradled between the rails of the 48-inch (rail spacing) trailer. On the other hand, the forward and aft rotor transmissions are too large to be suspended between the rails of the 48-inch trailer or workstand. This complicates adapter design, results in an undesirably high center of gravity for the towed load (the full 101 in. height of the transmission and rotor shaft must be supported above the 38 in. rail height of the trailer), and makes use of the twin rail trailer or workstand impractical for most repairs and buildup.

A number of alternate approaches are feasible. These include design of special transportation and/or workstands and dollies, use of special adapters with existing flatbed utility trailers, and use of shipping containers for multipurpose application (shipping, storage, transportation, and buildup). Each of these approaches offers some advantage over the twin rail concept -- especially with respect to optimizing access to the component for buildup and/or repair. However, each of these approaches, with the possible exception of the flatbed trailer, will probably entail more new design and the fabrication of more new equipment than would be required by total commitment to the twin rail concept.

Since the twin rail system is a proven, available, and acceptable transportation and maintenance approach, it is recommended that aircraft deployment, component transportation, and shop support requirements be evaluated in detail to determine the most practical and cost-effective concept for HLH application, whether it be total use of twin rail equipment or some mix of special new items and twin rail items.

RELATED EQUIPMENT

AIR-SEA TRANSPORTABILITY

Mobility exercises have proven the value of fast, efficient air transportability capability for weapons systems. In addition, there has always been a need to transport equipment via open deck ships or aircraft carriers.

Past experience with helicopter air transportability exercises has shown that thorough analysis and planning is required in order to achieve aircraft disassembly, loading, unloading and reassembly objectives. A key factor in developing an air transportability capability is the design of the GSE required to support and transport the major disassembled sections of the aircraft.

Shipboard transportation, by comparison, does not generate requirements for large cradles and adapters to support major sections of the aircraft. It does, however, require that special emphasis be placed on environmental protection of the aircraft for corrosion control, since in many instances aircraft are stored on open decks subjecting them to a constant bath of salt water spray.

In view of the foregoing, it is recommended that a comprehensive study be conducted of HLH air-sea transportability requirements to define the equipment necessary to perform the following operations:

- Disassembly

  In order to meet the C-5A air transportability requirement (see Figure 23), the aircraft will be disassembled into the following major sections/components:

  Fuselage
  Forward pylon
  Rotor hub and transmission
  Aft pylon including rotor hub and transmission
  Loadmaster's cab
  Forward landing gear
  Each main landing gear
  Stub wing and fuel cells as a unit
  Rotor blades
  Auxiliary fuel tanks (if installed)

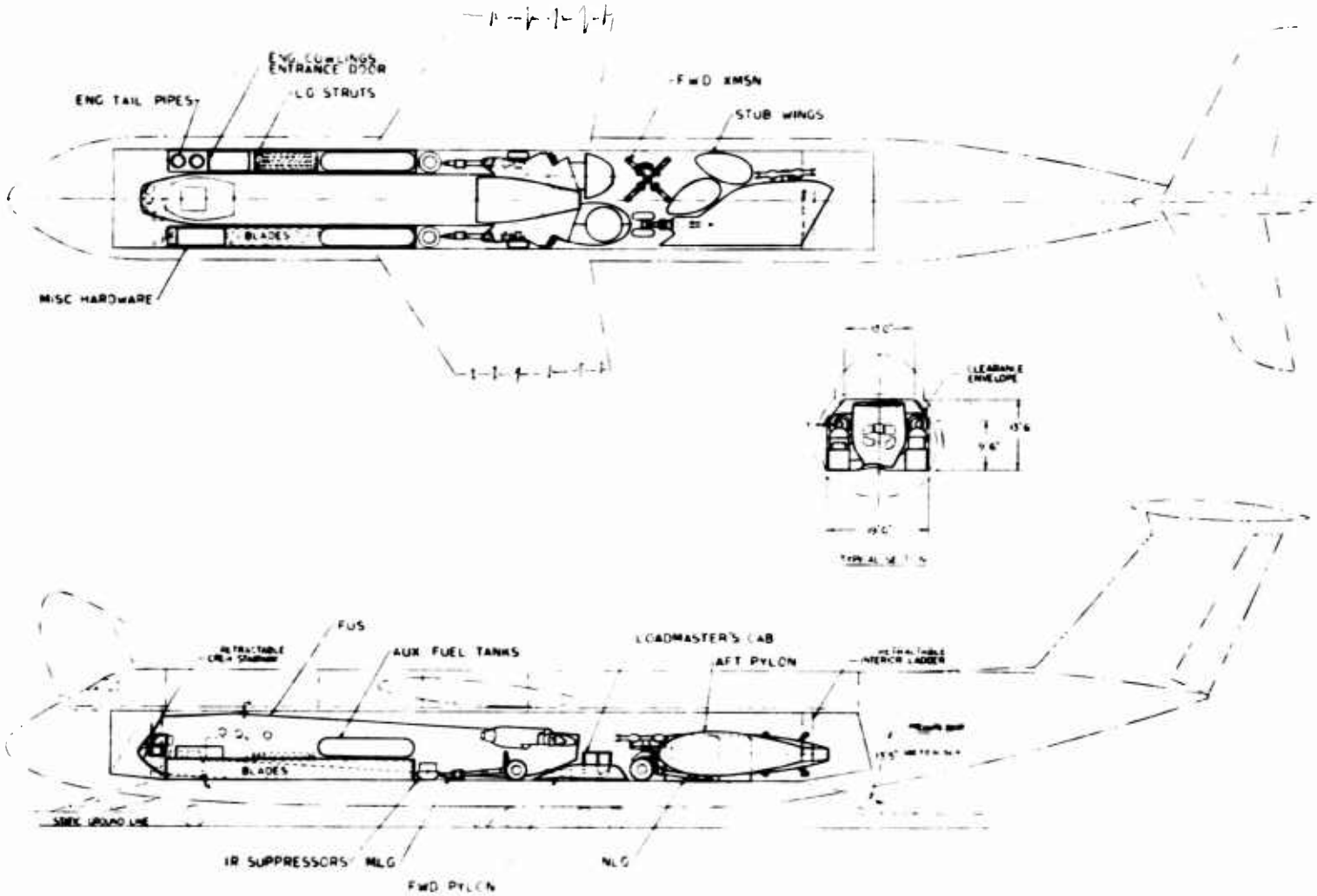

Figure 23. MLM C-5A Compatibility Layout.

Reproduced from best available copy.

In addition, the following components will be removed from each outboard engine:

IR suppressor
Nacelle aft cowling sections
Tail pipe

A large hoisting device, a ground tow vehicle, slings and handling adapters, fuselage jacks, and transportation dollies/skids will be required for the disassembly operation.

- Loading and Securing

  It is anticipated the loading operation will be accomplished using standard equipment such as towing bridles, tie-down chains, aircraft installed winches and ground tow vehicles.

- Unloading and Reassembly

  The equipment used for disassembly and loading will be satisfactory for all unloading and reassembly activities.

- Preservation - Depreservation

  This requirement can probably be satisfied by existing equipment.

- Environmental Protection

  Special covers and/or processing are recommended for the entire aircraft and/or sections depending upon the transportation mode and the degree of component exposure.

A number of the above items are currently available in the military inventory or commercially; however, the disassembly, lifting, and handling requirements for air transportability generate demands for unique equipment. Therefore, certain slings, handling adapters, and dollies/cradles will be new equipment. An in-depth study of HLH transportability and deployment requirements will identify the unique equipment requirements and provide cost and lead-time estimates.

SHIPPING CONTAINERS

Reusable shipping containers for high-cost aircraft components have usually been designed and developed to solve packaging and storage problems for those components. Hence, the primary purpose of the container has been to provide a protective device for shipping and storing the component.

An alternate approach to the above concept is the development of reusable containers for multipurpose use -- for example, use as handling/maintenance adapters in addition to the principal function of providing component protection during shipping and storage. Advantages of this approach are:

- Reduced maintenance time - Removing a large component from a shipping container to a workstand or handling adapter normally requires a two-man crew for a period of approximately 1 hour. By using a container designed for use as a maintenance stand, this time could probably be reduced by 50% since the only action required would be removal of the container lid.

- Reduced logistics cost - Multiple-purpose containers would reduce the total logistics cost of the weapon system by eliminating certain items of ground support equipment.

- More efficient handling of components - Components could be transported to and from the aircraft and transferred directly from the container to the aircraft, thereby reducing the handling operations and maintenance time currently required for use of special adapters and workstands.

- Improved safety - The chances of injury to personnel and damage to equipment would be reduced through the reduction in component handling requirements.

The above advantages must be weighed against any added cost for design, development, and procurement as compared to the cost of the traditional-type shipping container. A primary consideration is that the increase in container functional application must be accomplished with relatively little increase in container cost, since component protection will remain the primary function of the container.

It is recommended that reusable shipping container requirements be evaluated and the designs developed concurrent with GSE design to provide a thoroughly integrated approach for all major component shipping, storage, handling, and buildup/teardown requirements.

CONCLUSIONS AND RECOMMENDATIONS

This preliminary study has provided an opportunity to analyze GSE requirements concurrent with initial configuration definition of the HLH aircraft and ATC design. This early analysis has facilitated incorporation of maintenance considerations into the aircraft design and has virtually eliminated the need for complex new items of GSE.

Only the aircraft-mounted hoisting device for removal and replacement of major components and the blade fold GSE (both requirements identified in the Aircraft System Requirements Document) are especially unique when compared to existing support equipment of the same types. Moreover, the dissimilarity is generally related to the size of the HLH components and not to technological differences. The remainder of the new GSE requirements identified fall primarily into the following categories: lifting and handling equipment, special hand tools, and test sets. All of these are sufficiently comparable to existing items to preclude the need for long lead research, development, and test.

It may be concluded, therefore, that the technology is in hand for the GSE required for the HLH subsystems included in this study. Advancement of GSE state of the art is not required. However, it is recommended that GSE requirements analysis be initated concurrent with HLH prototype development for those subsystems such as avionics, instrumentation, and the flight control system which are not included in this study. Moreover, the alternate equipment concepts, transportability equipment, and shipping containers discussed in the preceding sections of this report have a substantial impact on HLH life cycle GSE costs as well as downtime and availability when related to HLH deployment considerations. Therefore, the following recommendations are presented:

- An in-depth evaluation of HLH major component replacement requirements and hoisting equipment alternatives should be conducted and weighed against deployment considerations to identify life cycle costs for each alternative and to facilitate selection of the most effective hoisting approach consistent with HLH deployment requirements and aircraft design considerations.

- A thorough assessment of the blade fold requirement should be conducted to positively define the impact on aircraft design and the life cycle cost of equipment to perform this function.

- A comprehensive analysis of all Army aircraft maintenance requirements should be conducted to define the range of torque applications required and to identify/develop equipment which will provide accurate and safe torque application with minimum human effort and simple low cost auxiliary equipment.

- A trade study should be performed to assess the cost and weight impact of aircraft-incorporated provisions for air-sea transportability and to permit timely evaluation and trade off of those provisions versus other equipment alternatives.

Each of the above considerations has an impact on the potential design of the HLH aircraft. Therefore, it is imperative that the recommended analyses be conducted early in the design development (at least concurrent with HLH prototype design) to provide timely cost assessment of each consideration and to permit selection of the appropriate design course at a time when hardware cost and impact can be minimized.

The other GSE analyses and trade-offs discussed in this report can be effectively accomplished during the course of subsequent HLH GSE selection and design processes.

APPENDIX I
GSE REQUIREMENTS INDEX

Note	Rqmt No.	Class	Nomenclature	Description and Purpose
14	1	D	Hoisting Device	Capacity 10,500 lb. Used to replace aft pylon.
2	2	D	Sling, Lifting Eye, Rotor Head	Capacity 8,100 lb. Used to replace rotor hub, transmission, or quick transmission change unit (QTCU).
	3	C	Sling, Swash-plate	Capacity 400 lb. Used to replace swashplate assembly.
	4	C	Sling, Rotor Blade	Capacity 800 lb. Used to replace rotor blade.
	P5	C	Sling, Engine	Capacity 1,725 lb. Used to replace quick engine change package.
	6	C	Sling, APU	Capacity 400 lb. Used to replace APU assembly (engine and compressor).
	7	C	Lifting Eye, Sling, QTCU or Aft Pylon	Capacity 10,500 lb. Used to replace QTCU or aft pylon.
	8	C	Sling, Stub Wing/Fuel Cell	Capacity 1,900 lb. Used to replace stub wing assembly.
15	9	D	Sling, Fuel Cell	Capacity 700 lb. Used to replace fuel cell assembly.
	10	C	Sling, Nylon, Multipurpose	Capacity 1,500 lb. Used to replace any component in the weight range of 50 - 1,500 lb. Examples: boost actuators, lag dampers, generators, ATM, air-conditioning unit, etc.
	11	A	Bomb Hoist (Aero 14B)	Capacity 2,240 lb. Used to replace APU, cargo winch, engine package, etc.

Note	Rqmt No.	Class	Nomenclature	Description and Purpose
	12	C	Adapter, Rotor Head	Capacity 2,950 lb. Used to support rotor head off aircraft. Possible use as a workstand.
	13	C	Adapter, Quick Transmission Change Unit (QTCU)	Capacity 8,100 lb. Used to support QTCU or transmission off aircraft. Possible use as a workstand.
	14	C	Adapter, Combining Transmission	Capacity 1,375 lb. Used to support combining transmission off aircraft. Possible use as a workstand.
	P15	C	Adapter, Engine Package	Capacity 1,725 lb. Used to support engine package off aircraft. Possible use as a workstand
3	16	D	Dolly, Main Landing Gear	Capacity 1,000 lb. Used to remove, reinstall, and support main and auxiliary landing gear off aircraft (includes wheel and tire assembly). Possible use as a transportability dolly.
	17	A	Dolly, Wheel and Tire Assembly	Capacity 375 lb. Supports wheel/tire assembly off aircraft.
3	18	D	Adapter, Engine Exhaust Device	Capacity 200 lb. Supports IR suppressor off aircraft.
	19	C	Adapter, Cargo Winch	Capacity 1,850 lb. Supports cargo winch quick-change pkg. Possible use as a workstand.
3	20	D	Adapter, APU	Capacity 400 lb. Supports APU/compressor assembly off aircraft. Possible use as a workstand.
1	21	C	Transport Dolly, Aft Pylon	Capacity 10,500 lb. Supports and transports aft pylon. Must be towable by any vehicle.

Note	Rqmt No.	Class	Nomenclature	Description and Purpose
1	22	C	Transport/ Handling Dolly, Fuselage	Capacity 37,000 lb. Supports and transports fuselage.
	23	C	Dolly, Transport, Rotor Blades	Capacity 3,200 lb (4 blades). Must be towable by any vehicle.
1	24	C	Transport Dolly, Left or Right Stub Wing and Fuel Cell Assy	Capacity 1,900 lb. Supports and transports subject assembly.
	25	A	Jacks, Fuselage (3)	Capacity two 20-ton; one 10-ton. Collapsed heights and extension lengths to be determined.
	26	A	Jacks, Wheel (3)	Capacity two 20-ton; one 10-ton. Collapsed heights and extension lengths to be determined.
	27	A	Trailer, Transportation	Capacity 8,100 lb. Used to transport components.
3	28	D	Adapter, Towbar	Adapts HLH landing gear for use with Standard Universal Towbar (Navy P/N 62A122J1-1, Model NT-4).
3	29	D	Puller, Retention Pin, Rotor Blade	Needed to remove blade-to-rotor head attaching pins for blade removal and/or replacement.
	30	C	Tool Set, Blade Fold	Required to mechanically fold and secure the blades in the folded position.
	31	A	Wrench, Power Torque	Capacity 3,620 ft-lb. Required for torquing major component hardware.
	32	A	Cleaning Equipment	Pressurized spray equipment to clean aircraft and components.

Note	Rqmt No.	Class	Nomenclature	Description and Purpose
	33	C	Adapter, Cargo Winch Spool	Capacity 300 lb. Used to support replacement cable spool on transport trailer.
	34	C	Centering Blocks, Boost Actuator	Used to hold swashplate in position when centering/drive scissor arms are removed.
3	35	D	Adapter, Coupling Assembly Swivel Bearing	Used in conjunction with a standard arbor press to replace swivel bearing on coupling assembly.
3	36	D	Wrench, Spanner, Swivel Nut	Used to remove and install coupling assembly swivel retaining nut.
	37	A	Maintenance Platform, Adjustable Height, Basket	Required to perform maintenance on airframe, rotor, and drive systems.
4	38	D	Wrench, Torque, 3/4-In. Drive	Used for high torque applications of hardware throughout the aircraft.
	39	C	Sling, Combining Transmission	Capacity 1,375 lb. Used to replace combining transmission.
5	40	D	Tiedown Line, Rotor Blade	Used to tie down rotor blades.
6	41	D	Hoisting Device	Capacity 3,000 lb. Required to replace components/assemblies in the 500- to 3,000-lb weight class, i.e., rotor blade, engine package, rotor head, etc.
	42	A	Trailer, Utility	Capacity 3,000 lb. To support and transport components assemblies in the 200- to 3,000-lb weight class.
	43	A	Hoisting Device	Capacity 500 lb. Required to raise and lower small components/assemblies too heavy for manual handling.

Note	Rqmt No.	Class	Nomenclature	Description and Purpose
5	44	D	Positioning Device, Rotor System	Used to pre-position rotor head for blade folding, maintenance, etc.
	45	C	Adapter, Swash-plate	Used to support the swash-plate assembly off aircraft. Possible use as a workstand.
	46	A	Aircraft Tow Tractor	Used to tow aircraft.
	47	C	Sling, Cargo Winch Assembly	Capacity 1,850 lb. Used to replace cargo winch assembly.
3	48	D	Adapter, Fuel Pod	Capacity 1,200 lb. Used to support the fuel pod off aircraft.
	49	A	Dry Compressed-Air Unit	Regulated 0-200 psi. Used to inflate landing gear struts, tires, etc.
7	50	D	Adapter, Engine Support Pylon	Capacity 2,500 lb. Used to support engine pylon and engine as a complete assembly.
7	51	D	Sling, Engine Support Pylon	Capacity 2,500 lb. Used to replace engine pylon and engine as a complete assembly.
7	52	D	Alignment Fix-ture, Drive System	Required to check alignment of drive system components following replacement of major fuselage sections.
7	53	D	Adapter, Aft Fuselage	Capacity 1,200 lb. Used to support and transport aft fuselage section.
	54	A	Portable Hydraulic Servicing Unit	Required for servicing nose gear oleo strut with filtered hydraulic oil.
3	55	D	Sling, Main Landing Gear	Capacity 2,500 lb. Used to replace landing gear assembly.

Note	Rqmt No.	Class	Nomenclature	Description and Purpose
4	56	D	Wrench, Torque, 1/2-In. Drive	Used for torque applications of hardware throughout the aircraft.
	57	A	Ground Hydraulic Cart	Required for ground power and hydraulic system maintenance. 30 gpm at 3,000 psi required for each of the four systems.
	58	A	Portable Lube Oil Servicing Unit	Required to service main engine and APU with filtered lube oil.
1	59	C	Adapter, Load-Controlling Crewman's Pod	Capacity 500 lb. Should be designed to support, raise, and lower pod from aircraft and serve as a transport dolly.
7	60	D	Sling, Aft Fuselage	Capacity 1,200 lb. Used to replace aft fuselage.
13	61	D	Gage, Winch Width and Depth Traversing Groove	Required for winch assy periodic inspection.
13	62	D	Lock Pin, Winch Drum	Required for winch assy periodic inspection.
13	63	D	Hand Crank and Indicator, Winch Drum	Required for winch assy periodic inspection.
	64	A	Wrench Set, Pitch Link Adjusting	Wrench type - 2-in. open end. Required to loosen and tighten pitch link adjusting locknuts.
	65	A	Press, Arbor	Required to replace bearings and bushings throughout aircraft. Force requirements undetermined.
	66	C	Adapter Set, Arbor Press	Used with arbor press for bearing and bushing replacement. Set must include a 2-15/16-in.-dia adapter for pitch link brg replacement.

Note	Rqmt No.	Class	Nomenclature	Description and Purpose
3	67	D	Dial Indicator	Required to check various wear tolerances or clearances, i.e., pitch link bearing wear.
3	68	D	Spring Scale	Used with dial indicator to check pitch link bearing wear.
	69	C	Lifting Tool, Generator	Required to facilitate removal and installation of the generator from the forward or aft transmission.
9	70	D	Hydraulic Brake Bleeder Unit	Used for bleeding brakes. 10 to 20 psi of hydraulic pressure.
	71	C	Removal Tool, Wheel Brake Lining	Required for removing brake lining.
8	72	D	Portable Air Compressor	Required to inflate tires (109 psi).
	73	A	Battery Charger	Required to charge the aircraft battery in the shop.
	74	C	Wrench, Main Landing Gear Oleo Retaining Nut	Required to remove and install the nut which retains the oleo strut assembly in the lower end of the main landing gear barrel.
	75	A	Gage	0-25 psig type GMU-25/E, FSN 4935-793-1677 AC or equivalent. Required for troubleshooting ECU.
	76	A	Multimeter	AN/PSM4C, FSN 6RD 6625-893-3779 TANN. Required for troubleshooting ECU and electrical systems.
	77	A	Power Source	28vdc required for troubleshooting ECU off aircraft.

Note	Rqmt No.	Class	Nomenclature	Description and Purpose
	78	A	Pneumatic Source	50 psig at 20 lb per min. Required for troubleshooting ECU off aircraft.
	79	C	Wrench, Nose Landing Gear Oleo Retaining Nut	Required to remove and install the nut which retains the oleo strut assy in the lower end of the nose landing gear barrel.
	80	C	Assembly Fixture, Pitch Link	Required to adjust the pitch link to its nominal length and to establish correct rod end bearing angular relationship.
3	81	D	Lock Device, Oleo Strut	Required to prevent oleo from extending when supporting aircraft on fuselage jacks. This would enable the aircraft to clear the ground with a minimum of vertical movement.
1	82	C	Sling, Aircraft	Required to lift complete aircraft. Sling capacity 60,000 lb.
1	83	A	Crane	Capacity 60,000 lb. Required to lift complete aircraft.
13	84	D	Adapter, Dynamic Absorbers	Required to support two dynamic absorbers. Must fit a standard twin-rail transportation trailer.
13	85	D	Folding Stepladder	Required to permit maintenance personnel to work on underside of HLH. Working height varies from 8 to 10 feet.
	86	A	Towbar	Required for ground handling.
5	87	D	Tiedown Chains (Heavy Duty)	Required for securing aircraft in high wind conditions.

Note	Rqmt No.	Class	Nomenclature	Desription and Purpose
5	88	D	Tiedown Cables or Nylon Straps	Required for securing aircraft under normal conditions.
	89	A	Ground Power Unit, Electrical	AC electric power unit, 60 kva, 3-phase, 115/200vac, 400 Hz, required for functional check of aircraft electrical systems.
1	90	C	Protective Cover Kit	Required to provide protection for aircraft during shipment, storage, or under adverse environmental conditions.
	91	A	Long-Handled Scrub Brush	Required for external cleaning of the aircraft.
4	92	D	Water Hose and Nozzle	Required to wash aircraft. Estimated length needed is 200 ft.
12	93	D	Adapter, Forward and Mid Fuselage	Capacity 26,200 lb. Required to support and load forward and mid fuselage into C-5A for air transport.
4	94	D	Vacuum Cleaner	Required to clean interior of aircraft.
	95	A	Contact Insertion Tool	Required to repair electrical wiring.
	96	A	Contact Extraction Tool	Required to repair electrical wiring.
	97	A	Crimping Tool	Required to repair electrical wiring.
	98	A	Ty-Rap Tool	Used to repair electrical wiring.
	99	A	Heat Gun	Used to repair electrical wiring.
	100	A	Insulation Tester	Used to check electrical wiring during troubleshooting or following repair.

Note	Rqmt No.	Class	Nomenclature	Description and Purpose
	101	C	Test Set, Dynamic Absorber	Required to tune and test the dynamic absorbers during reassembly. Power supply required: 115/120vac, 60 cps.
4	102	D	Torque Wrench	3/8-in. drive. Required to ensure accuracy in low torque applications of hardware throughout the aircraft.
1	103	C	Towing Bridles	Required to load disassembled HLH into transport aircraft. Lengths and capacities to be determined.
	104	C	Adapter, Pitch Housing Cross Beam Assembly	Capacity 280 lb. Required for replacing pitch housing cross beam assembly.
	105	A	Tensiometer, Cable	Required for checking tension of cargo handling system cables.
10	106	D	Fueling Truck	0-300 gpm, 0-50 psig. Equipped for pressure fueling of aircraft.
10	107	D	Fueling Truck	0-50 gpm per nozzle. Required for gravity fueling of aircraft.
10	108	D	Ladder	20 feet high. Required to permit mechanic to reach pressure fueling point on stub wing which is approximately 17 feet above the ground when landing gear is in extended position.
	109	A	Pressure-Reducing Regulator	Capability 0-2.2 psi. Required to regulate air or gas pressure inside fuel cell during pressure testing.
	110	A	Water Manometer	Range 40 to 70 in. of water. Required to detect loss of pressure during fuel cell pressure test.

Note	Rqmt No.	Class	Nomenclature	Description and Purpose
	111	A	Tester, Fuel System Test and Calibration	Required to calibrate the fuel quantity indicating system.
11	112	D	Mobile Electrical Power Unit	Required to furnish an external source of electrical power for maintenance power requirements.
	113	A	Meter, Explosion	Required to inspect fuel cell interior for level of fuel vapor concentration to insure safe conditions for maintenance.
	P114	C	Engine Adapter, Bomb Hoist	Capacity 1,800 lb. Required to position and support the bomb hoist for removing and installing all engine assemblies.
	115	C	Lightweight Maintenance Davit	Capacity 500 lb. Required to support a lightweight hoist for removal and installation of components.
	116	A	Wrench, Cable Cutter	Required to remove and replace the cable cutter assembly.
	117	A	Maintenance Stand	Adjustable height, 5 to 13 ft. Must be capable of supporting two men plus a toolbox. Required to perform maintenance on cargo hoist system and other aircraft maintenance on the underside of the fuselage. FSN 1730-894-2826.
	118	C	Adapter Set, Rotor Transmission Mounting Bolts	Capacity 3,620 ft-lb. Consists of a torque reaction fixture and adapter to be used in conjunction with a power torque wrench (GSE Item No. 31) for torquing rotor transmission mounting bolts.

Note	Rqmt No.	Class	Nomenclature	Description and Purpose
	119	A	Hoisting Device	Capacity 8,100 lb. Used to replace rotor blades, rotor heads, transmissions, and QTCU. Hook height with LG in extended position, 42 ft 5 in. Hook height with LG in normal position, 36 ft 5 in.
	P120	C	Depth Gage, Torquemeter Pickup	Required to determine shim requirements to maintain the proper clearance between the torquemeter shaft exciter teeth and the pickup face.
	P121	C	Test Set, Torquemeter Runout	Required to perform torquemeter runout check and a calibration check on the torquemeter indicator. External power is not required for this maintenance requirement.
	P122	C	Test Set, Thermocouple	Power requirements, 115vac, 60 cycle. Required to check deteriorating, shorted, or heat-damaged thermocouple.
	P123	C	Test Set, Electrical Components	Power requirements, 24vdc. Required to check operation of engine electrical system components and to use as an aid in troubleshooting the engine electrical system.
	P124	C	Rigging Fixture, Variable Vane	Required for rigging the variable vane mechanism.
	P125	C	Trim Fixture	Required to ensure proper operation of the fuel control following replacement.
	P126	A	Borescope Kit	Required to perform inspection of internal engine parts and components.
	P127	C	Plug, Shorting, Permanent Magnet Generator (PMG)	Required to prevent damage to the PMG during maintenance.

Note	Rqmt No.	Class	Nomenclature	Description and Purpose
	P128	C	Adapters/ Nozzles, Engine Wash	Required for internal washing of the engine.
	P129	C	Adapters/ Nozzles, Compressor Cleaning	Required for internal cleaning of compressor section of the engine.
	P130	C	Adapter, Lifting, Compressor Case Half	Required to remove and install the compressor case half section.
	P131	C	Puller, Low-Pressure Turbine Oil Tube Filter	Required to remove the low-pressure turbine oil tube filter for cleaning and inspection.
	P132	C	Puller, Accessory Gearbox Seal	Required to replace the accessory gearbox seal.
	P133	C	Puller, Fuel Pump Drive Oil Seal	Required to replace fuel pump drive oil seal.
	P134	C	Adapter, Accessory Gearbox Assy	Required to adapt the accessory gearbox assembly to the universal component stand.
	P135	C	Component Stand, Universal	Required to support major sections of the engine.
	P136	C	Adapter, Combustor Assembly	Required to adapt the combustor assembly to the universal component stand.
	P137	C	Adapter, Power Turbine Assy	Required to adapt the power turbine assembly to the universal component stand.
	P138	C	Test Set, Electronic Control and Power Management, with Adapter Cables	Required to functionally check (static and dynamic) the electronic control system and Power Management Control System (PMCS).

Note	Rqmt No.	Class	Nomenclature	Description and Purpose
	P139	C	Rigging Pins (2 each)	Required to rig the inlet guide vanes and fuel control.
	P140	C	Adapter, Socket, Gas Generator Rotation	Required to rotate internal components of the engine in order to permit complete borescope inspection.
	P141	C	Trim Fixture, Remote	Required to perform remote engine trimming following fuel control replacement or other related maintenance.
	P142	C	Test Set, Fuel Control Compressor Variable Geometry (CVG) Position	Required to check the compressor variable vane position and fuel control system pressures.
	P143	C	Wrench, Spline, Low-Pressure Turbine Rotor Coupling Nut	Used to remove and/or inspect the low-pressure turbine assembly.
	P144	C	Puller, Low-Pressure Turbine Coupling Nut Lock	Used to remove and/or inspect the low-pressure turbine assembly.
	P145	C	Adapter Set, Power Turbine Support	Required to support the power turbine unit in the universal component stand.
	P146	C	Fixture, Setting, Power Turbine Rotor Axial Position	Required to accurately locate the axial position of the power turbine prior to removal in order to ensure correct position on reinstallation.
	P147	C	Wrench, Spanner, Power Turbine Rotor Bearing Retaining Nut	Required to remove and install the power turbine assembly.
	P148	C	Holder, Power Turbine Rotor	Required to remove and install the power turbine assembly.

Note	Rqmt No.	Class	Nomenclature	Description and Purpose
	P149	C	Holder, Power Wrench to Power Turbine Rotor	Required to remove and install power turbine assembly.
	P150	C	Adapter Set, Power Turbine Removal (on aircraft)	Required to remove and replace power turbine unit on aircraft.
	151	C	Wrench, Spanner, Rotor Blade Retention Pin Nut	Required to remove the nut which secures the rotor blade retention pin in the rotor head.
	152	C	Wrench, Anti-rotation, Rotor Blade Retention Pin	Required to act as a torque reaction device for the blade retention pin during installation and torquing of the retention pin retaining nut.
	153	C	Guide Pin, Rotor Blade Retention Pin	Required to facilitate removal and installation of the rotor blade retention pin.
	154	C	Test Set, Supervisory Panel	Required to perform a fault-isolation check of supervisory panel to locate defective module(s).
	155	C	Test Set, Ice Protection Systems	Required to fault-isolate and test anti/deicing systems.
	156	C	Test Set, Master Caution Panel	Required to fault-isolate any of the master caution panels for defective module(s).

NOTES

1 Required for transportability

2 Deleted, combined with Requirement No. 7

3 Deleted due to design change

4 Deleted, considered to be a standard item

NOTES - Cont.

5 Deleted, considered to be a flyaway item

6 Deleted, Requirement No. 11 or 119 will satisfy this need

7 Deleted, not a planned requirement for organizational or direct support

8 Deleted, combined with Requirement No. 49

9 Deleted, combined with Requirement No. 54

10 Deleted, considered to be base equipment, not aircraft equipment

11 Deleted, combined with Requirement No. 89

12 Deleted, No. 22 satisfies this requirement

13 Deleted, reanalysis indicated this requirement is not needed

14 Deleted, not needed, combined with Requirement No. 83

15 Deleted, combined with Requirement No. 8

CLASS LEGEND

A = Existing equipment available to meet the requirement

B = Existing equipment requiring modification to meet the requirement

C = Equipment not available, will require new design and development

D - Deleted

NOTE: The letter P preceding a number denotes a powerplant requirement.

APPENDIX II

HLH GSE REQUIREMENTS/SYSTEM APPLICATION MATRIX

SYSTEM - COMPONENT - [illegible]
AIRFRAME SYSTEM
Aft Pylon
Fwd Clamshell Door
Aft Clamshell Door
Stub Wing
Engine Pylon Clamshell
Load-Controlling Pod
Pendulum Absorber
Dynamic Absorber
Fuselage Assy
Hoist Entire Acft
Moor Acft
Tow Acft
Wash Acft
Clean Acft Inside
Load Acft for Air Transp
Prep Acft for Ext Air Transp
Prep Acft for Ship Transp
LANDING GEAR SYSTEM
NLG Oleo Strut
Nose Ldg Gr Assy
Main Ldg Gr Assy
MLG Support Brace
MLG Oleo Strut
MLG Brake Assy
Wheel Assy
Tire
ROTOR SYSTEM
Rotor Blade
Rotor Hub
Damper Assy
Swashplate Assy
Upper Controls
Pitch Housing/Crossbeam Assy
Crossbeam Assy
Rotating Condition Sensor
CARGO HANDLING SYSTEM
Winch Assy
Coupling Assy
Control Panel
Position Lock Ind
Hoist Drive Assembly
Cable Cutter Assy
Support & Span Posn Sys
Load Isolator
Suspension System
APU SYSTEM
APU Assy
DRIVE SYSTEM
Combining Xmsn
Aft Xmsn
Forward Xmsn
POWERPLANT SYSTEM
Exhaust Device
Engine (Outboard)
Engine (Center)
Air Part. Sep (No. 1, No. 3)
Air Part. Sep (No. 2)
Ejector
Tail Pipe
Torquemeter
Thermocouple Harness
Electrical System
Variable-Vane Actuator
Fuel Control
Basic Engine
Permanent Magnet [illegible]
Compressor
Oil Tube Filter
Accessory Gearbox
Engine Modules
Combustor
Power Turbine
Electrical Control Sys
Inlet Guide Vanes
AIR CONDITIONING PRESSURE & SURFACE ICE SYSTEM
Envir Control Unit
CBR Filter
ELECTRICAL POWER SUPPLY SYSTEM
Generator (Aft ATD Mtd)
Generator (Aft Xmsn Mtd)
Generator (Fwd Xmsn Mtd)
Battery
Exterior Lights
Aircraft Wiring
Power Supply System
HYDRAULIC/PNEUMATIC POWER SUPPLY & DISTRIBUTION
ATD Unit (Fwd Pylon)
ATD (Hoist)
Heat Exchanger
ATD (Aft Pylon)
Fill Module
Hyd Pwr Pack (Aft Xmsn Driven)
Hyd Pwr Pack (Aft Driven)
Hyd Pwr Pack (Fwd Xmsn Driven)
Hyd System
FUEL SYSTEM
Fuel Cells
Fuel Quantity Ind Sys

Preceding page blank

Reproduced from best available copy.

APPLICATION MATRIX

LEGEND

Class A - Existing equipment is available to meet the requirement.

Class B - Existing equipment requires modification to meet the requirement.

Class C - Equipment not available; new design and development is required.

1 - Required for transportability

2 - Deleted - Combined with Requirement 7

3 - Deleted due to design change

4 - Deleted - Considered to be a standard item

5 - Deleted - Considered to be a flyaway item

6 - Deleted - Requirement 11 or 119 will satisfy this requirement

7 - Deleted - Not a planned requirement for organizational or direct support

8 - Deleted - Combined with Requirement 49

9 - Deleted - Combined with Requirement 54

10 - Deleted - Considered to be base equipment

11 - Deleted - Combined with Requirement 89

12 - Deleted - Requirement 27 satisfies this requirement

13 - Deleted - Reanalysis indicated that this requirement is not needed

14 - Deleted - Combined with Requirement 83

15 - Deleted - Combined with Requirement 8

NOTE: The letter P preceding a number denotes a powerplant requirement.

APPENDIX III
NEW EQUIPMENT DESCRIPTIONS

New Equipment Requirement
(Supplemental Information)

Sling, Swashplate — **HLH GSE Item No. 3**

A sling for lifting the HLH swashplate assemblies (both forward and aft) during installation/removal operations is required.

In concept, the sling will be similar to the CH-47 sling (114E5852), except that four lift cables (approx 60 in. long) will be used, with attaching fittings for each of the pitch link lugs on the swashplate. Each cable will be attached to a lifting plate containing a lifting eye for a hoist attachment. Design will provide for lifting approximately 500 lb.

Sling, Rotor Blade — **HLH GSE Item No. 4**

A sling for handling the HLH rotor blades (both forward and aft) during installation/removal operations is required. It must be capable of hoisting single blades (weight 800 lb).

In concept, the sling will be similar to the CH-47 sling (114E5911) to support a blade 46 ft long, with a 38-in. chord. Two cradle assemblies with manually operated latching devices, spaced approximately 14 ft apart on a spreader beam with a center lift eye, will make up the sling. Pads under the cradles will provide for positioning a loaded sling on the ground.

Preceding page blank

New Equipment Requirement
(Supplemental Information)

Sling, APU — HLH GSE Item No. 6

A sling is required for installation/removal operations of the auxiliary power unit (APU) and the attached pneumatic power compressor. Total weight to be lifted is approximately 400 lb.

In concept, the sling shall be similar to the CH-47 sling (114E5924). It shall consist of a spreader bar, from which four short cables extend to attachment points on the APU-compressor assembly. Quick-release pins shall be provided. A center lift eye shall be provided on the spreader bar for attachment of a lift hook.

Lifting Eye/Sling - QTCU or Aft Pylon — HLH GSE Item No. 7

A lifting eye is required for lifting the forward and the aft transmissions, the Quick Transmission Change Units (QTCU's), and the aft pylon. Multipositions must be provided for the lift hook to permit lifting of components in proper attitudes during installation and removal operations.

In concept, the hoisting eye is similar to the CH-47 hoisting eye (114E5902). Lifting will be accomplished by interface with the internal threads of the transmission rotor shafts. Design will provide for lifting approximately 10,500 lb.

New Equipment Requirement
(Supplemental Information)

Sling - Stub Wing HLH GSE Item No. 8

A sling for hoisting the stub wings (L/R) and the fuel pods (L/R) is required.

In concept, the sling will be similar to the CH-47 sling (114E5903), except that three lift cables (approx. 72 in. long) will be used. Each cable will be attached to a lifting plate containing a lifting eye for a hoist attachment. Design will provide for lifting approximately 3,700 lb.

Multipurpose Nylon Sling HLH GSE Item No. 10

A sling for lifting miscellaneous components of the HLH during installation/removal operations is required. These components, including boost actuators, lag dampers, generators and the air conditioning unit, weigh in an approximate range of 50 to 500 lb.

For maximum adaptability in this multipurpose function, this sling shall consist of a nylon mesh net approximately 36 in. square, suspended by four nylon cords from a single lift ring. Lift ring and cords will be arranged in a manner similar to the HLH sling-combiner transmission.

New Equipment Requirement
(Supplemental Information)

Adapter, Rotor Head HLH GSE Item No. 12

The adapter is a structural assembly, designed for a mechanical interface with standard transportation trailers and workstands, and providing for mounting one rotor hub assembly, consisting of the hub, pitch housings, and lag dampers.

In concept, the adapter shall be similar to the CH-47 rotor hub adapter (114E5840). One stub rotor shaft, centered on the adapter, will be provided for locating the rotor hub assembly. Support and securing devices will be provided for the four pitch housings, which will be positioned at 45° to the fore/aft axis of the adapter to minimize overhang. Design will accommodate a weight of 2,500 lb for the rotor hub assembly.

The adapter will be mounted on four airlog adapter single rollers (Model 2550), spaced for an airlog trailer with 60-in. track spacing. The adapter is an element of the component handling system proposed for the HLH.

Adapter, Quick Transmission Change Unit (QTCU)
HLH GSE Item No. 13

The adapter is a structural assembly, designed for a mechanical interface with standard transportation trailers and workstands, and containing mounting provisions for the forward and aft transmissions. Adapter design will provide for assembly buildup of QTCU's, with allowances for work area and position, safety for personnel, and handling stability for the assembly and equipment.

In concept, the adapter shall be similar to the CH-47 adapter assembly (114E5871). The HLH adapter will be considerably larger and heavier than the CH-47 adapter to accommodate a mounting pattern extending 62 in. center-to-center in the fore/aft direction, 65 in. between centers left to right (forward) and 53 in. between centers left to right (aft), and an approximate load of 8,200 lb. Basic structure will be steel, rather than aluminum alloy.

The adapter will be mounted on four airlog adapter single rollers (Model 2550), spaced for an airlog trailer with 60-in. track spacing. This adapter is an element of the component handling system proposed for the HLH.

New Equipment Requirement
(Supplemental Information)

Adapter, Combiner Transmission HLH GSE Item No. 14

The adapter is a structural assembly, designed for a mechanical interface with standard transportation trailers and workstands, and containing mounting provisions for a combiner transmission. It is required for assembly buildup and transportation of the combiner transmission.

In concept, the adapter shall be similar to the CH-47 adapter mix box (114E5888-1). The HLH adapter will accommodate one combiner transmission weighing approximately 1,400 lb, and will provide for each of four mounting points located in a rectangular pattern measuring 20 in. between centers in the fore/aft direction and 22 in. between centers left to right.

The adapter will be mounted on four airlog adapter single rollers (Model 2550), spaced for an airlog trailer with 48-in. track spacing. The adapter is an element of the component handling system proposed for the HLH.

New Equipment Requirement
(Supplemental Information)

Adapter, Engine Package HLH GSE Item No. 15

The adapter is a structural assembly, designed for a mechanical interface with standard transportation trailers and workstands, and providing for mounting one engine package. The adapter is required for transporting the engine and for use as an assembly buildup workstand.

The adapter concept shall be as shown in the sketch below. Four special mounting adapters will be attached to airlog adapter single rollers. The mounting adapters will be designed to attach to the General Electric TF-34 Engine with quick attachment devices. The adapter-engine package will be used with an airlog trailer with 60-in. rail spacing. The adapter is an element of the components handling system proposed for the HLH.

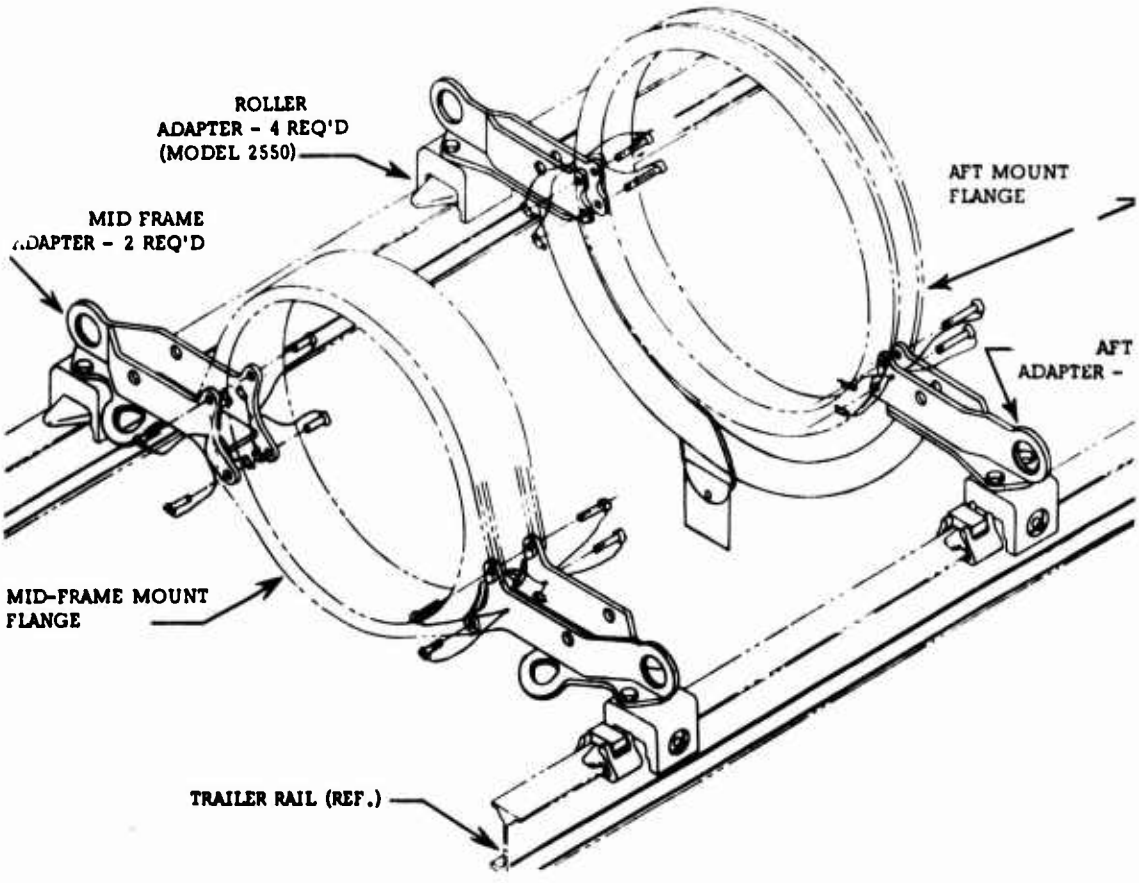

New Equipment Requirement
(Supplemental Information)

Adapter, Cargo Winch — HLH GSE Item No. 19

The adapter is a structural assembly, designed for a mechanical interface with standard transportation trailers and workstands, and providing for mounting one cargo winch (Quick Change Package). The adapter is required for transporting the cargo winch and for use as an assembly buildup workstand.

In concept, the adapter shall be similar to the CH-47 mix box adapter (114E5888) with a rectangular frame mounted on four airlog adapter single rollers (Model 2250) spaced for an airlog trailer with 60-in. track spacing. Two rails for mounting the cargo winch cradle will be positioned on cross members attached to the top of the adapter frame. The rails will be approximately 60 in. long to support a cargo winch buildup approximately 50 in. long, 50 in. wide, an overall height of 45 in., and a weight of 1,850 lb.

The adapter is an element of the component handling system proposed for the HLH.

Transport Dolly, Aft Pylon — HLH GSE Item No. 21

For air transportability and major repair operations of the aft pylon, a transport dolly is required.

The transport dolly shall be similar in concept and design to the CH-47 fuselage cradle (114G1171). Essentially a rectangular frame, approximately 9 ft wide and 28 ft long, supported by 6 swivel casters, the dolly shall provide mounting hard points for the pylon attachment points. It shall be designed to support and transport the entire aft pylon assembly, including the transmission and rotor hub, with a total weight of approximately 10,500 lb.

New Equipment Requirement
(Supplemental Information)

Transport Dolly, Fuselage — HLH GSE Item No. 22

The HLH must be disassembled for C-5A air transport. The HLH fuselage is prepared by removal of both the forward and the aft pylons, the landing gear, the fuel pods, and the load controlling crewman's pod. A transport dolly is required to support and secure the stripped fuselage.

In concept, the transport dolly shall be similar to the CH-47 fuselage cradle (114G1171). The main frame shall be approximately 11 ft wide x 83 ft long, supported by 8 swivel casters. Transverse support cradles (4) plus simulated landing gear hard points (1 forward and 2 aft) shall be provided. Tow lugs shall be provided at both ends. The transport dolly shall support a total weight of 37,000 lb.

Transport Dolly, Rotor Blades — HLH GSE Item No. 23

A transport dolly is required for handling a rotor set of 4 blades (fwd or aft). This item would be used for ground handling and for air transportability.

In concept, the item shall be similar to the CH-47 support rack (114G1119). The 4 blades shall be firmly supported in individual saddles, blade chords vertical and leading edge down. Each blade measures in cube approximately 9 in. thick, 42 in. wide, and 490 in. long. The total weight for 4 blades is 3,200 lb. Blades shall be supported by transverse saddles at the root and tip ends and 3 intermediate locations. The dolly shall be mounted on 6 swivel casters and shall have a removable tow bar provided for either end.

New Equipment Requirement
(Supplemental Information)

Transport Dolly, Main Landing Gear/Stub Wing & Fuel Cell
HLH GSE Item No. 24

For air transportability,both left and right assemblies of MLG/stub wing and fuel cell must be removed from the HLH for loading in the transport aircraft. A transport dolly is required to support and transport the paired assemblies. The total weight to be supported is approximately 3,700 lb.

The transport dolly shall be similar in concept and design to the CH-47 fuselage cradle (114G1171). Essentially a rectangular frame, approximately 18 ft wide x 19 ft long, supported on 4 swivel casters, the dolly shall provide cradle support for the assemblies. Firm clamp support shall be provided for the oleo struts.

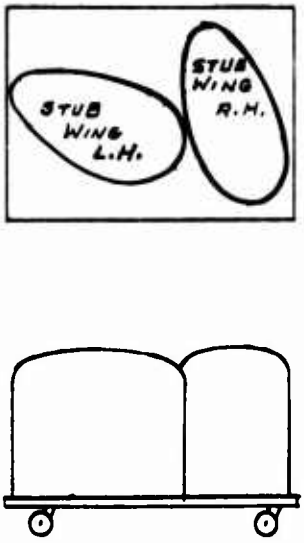

New Equipment Requirement
(Supplemental Information)

Adapter, Cargo Winch Spool — HLH GSE Item No. 33

The adapter is a structural assembly, designed for a mechanical interface with standard transportation trailers and workstands, and providing for mounting one winch spool.

In concept, the adapter shall be similar to the CH-47 vertical shaft adapter (114E5878). The HLH adapter will mount a drum, measuring approximately 26 in. in diameter and 40 in. long, and weighing approximately 1,200 lb. Saddle and securing devices will be provided. The drum axis will be positioned parallel to the transportation trailer tracks.

The adapter will be mounted on four airlog adapter single rollers (Model 2550), spaced for an airlog trailer with 48-in. track spacing. The adapter is an element of the component handling system proposed for the HLH.

Centering Blocks, Boost Actuator — HLH GSE Item No. 34

Centering blocks are required for holding the swashplate in position when centering/drive scissor arms are removed.

In concept and design, the centering blocks shall be similar to CH-47 safety blocks (114E5900). The groove shall be designed to slip over an actuator cylinder measuring approximately 3 in. in diameter. The overall length of the blocks shall be 13 in. Centering blocks shall be considered as a set - with 6 individual blocks in each set.

New Equipment Requirement
(Supplemental Information)

Sling, Combiner Transmission — HLH GSE Item No. 39

A sling for handling the HLH combiner transmission during installation/removal operations is required. It must be capable of hoisting 1,400 lb.

In concept, the sling will be similar to the CH-47 sling (114E5903). It will consist of a single lift ring joining four equal length cables, which will have fittings at the opposite ends, providing for ready attachment to the transmission lift points.

Adapter, Swashplate — HLH GSE Item No. 45

The adapter is a structural assembly, designed for a mechanical interface with standard transportation trailers and workstands, and providing for mounting one swashplate assembly consisting of a controllable swashplate, a centralizing mechanism, a dual drive arm assembly and drive collar, and four pitch links. The assembly weighs approximately 500 lb.

In concept, the adapter shall be similar to the CH-47 rotor hub adapter (114E5840). One simulated rotor shaft, centered on the adapter, will be provided for locating the assembly. Support and securing devices for the swashplate and the pitch links will be provided.

The adapter will be mounted on four airlog adapter single rollers (Model 2550), spaced for an airlog trailer with 48-in. track spacing. The adapter is an element of the component handling system proposed for the HLH.

New Equipment Requirement
(Supplemental Information)

Sling, Cargo Winch Assembly HLH GSE Item No. 47

A sling is required for installation/removal operations with the cargo winch assembly. The total weight of the assembly is approximately 1,850 lb.

In concept, the sling shall be similar to the CH-47 sling (114E5924). A spreader bar, approximately 40 in. long, having an integral center lift eye, shall provide lift points at each end, from which 2 short links shall extend to an interface with lifting eyes on the winch frame.

Adapter, Load Controlling Crewman's Pod HLH GSE Item No. 59

The crewman's pod is removed for airlift and field repair operations. An adapter for supporting the pod is required. The adapter shall be designed as a special pallet with provisions for forklifting. A welded aluminum alloy frame, of approximate 6 in. x 48 in. x 96 in. dimensions, to which padded cradles are attached, will support the 500-lb (approx) pod. Four drilled pads will be provided for optional attachment of Model 2550 airlog rollers (or equivalent) to allow use of the adapter in the component handling system proposed for the HLH.

New Equipment Requirement
(Supplemental Information)

Adapter Set — **HLH GSE Item No. 66**

Normal maintenance operations on the HLH include the replacement of various bearings and bushings in several components. To facilitate operations, an adapter set, consisting of 3 drift assemblies and 3 pushers, is required.

Drift assemblies shall be similar in concept to the CH-47 drift assembly (114E5812) and pushers shall be similar to the CH-47 pusher (114E5846). In size, the approximate diameters are 2 1/2 in., 3 in. and 3-1/2 in. (design is not final at this date).

Lifting Tool, Generator — **HLH GSE Item No. 69**

A lifting tool is required for removal and installation of the generators from the forward or aft transmissions. The generator weighs approximately 75 lb and measures approximately 7 in. dia x 12 in. long.

The lifting tool shall be made of aluminum alloy and consists of a wrapper plate, end plate, handle, shackle and pin, and rivets.

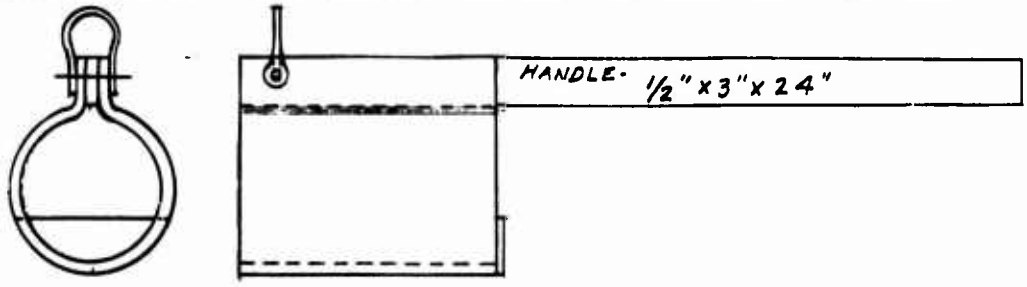

New Equipment Requirement
(Supplemental Information)

Brake Lining Removal Tool — HLH GSE Item No. 71

A tool is required for removing/installing the brake cylinder heads during brake lining replacement operations.

The tool shall be of the spanner wrench type, consisting of a flat steel bar, of approximate dimensions 1/4 in. thick, 1-1/2 in. wide, and 12 in. long. Two pins, of 1/4 in. drill rod, will be pressed into holes near one end of the bar. The pins will be tack welded and the assembly cad plated.

Wrench-MLG Oleo Retaining Nut — HLH GSE Item No. 74

During assembly/disassembly operations on the main landing gear strut, the oleo retaining nut must be installed/removed. A spanner wrench is required for the operation.

In concept and design the wrench shall be similar to the CH-47 locknut wrench (114E5822). It shall have machined lugs spaced on an approximate 4-1/4-in. radius. It shall be designed for use with a standard 3/4-in. drive torque wrench.

New Equipment Requirement
(Supplemental Information)

Wrench, NLG Oleo Retaining Nut — HLH GSE Item No. 79

During assembly/disassembly operations on the auxiliary landing gear strut, the oleo retaining nut must be installed/removed. A spanner type wrench is required for the operation.

In concept and design, the wrench shall be similar to the HLH/GSE Item No. 74. It shall have machined lugs spaced on an approximate 3-3/4-in. radius, and shall provide for use with a standard 3/4-in. drive torque wrench.

Assembly Fixture, Pitch Link — HLH GSE Item No. 80

An assembly fixture is required for adjusting the nominal length and the angular relationship of the rod end bearings of the HLH pitch links.

In concept, the assembly fixture shall be similar to the CH-47 fixture (114G1102). The HLH pitch links will be approximately 24 in. between centers and the bearing inside diameters will be approximately 3 in. The fixture shall be used for both the forward and the aft pitch links.

New Equipment Requirement
(Supplemental Information)

Sling, Aircraft — HLH GSE Item No. 82

A sling is required for lifting the complete aircraft, for transportability and aerial retrieval. The sling shall consist of a beam, approximately 31 ft long and similar in concept to the beam used on the CH-47 sling (143G1006), from which two cables extend at each end to interface with 4 fuselage lift fittings. The four cables shall be approximately 8 ft long and be equipped with clevis fittings and lift pins. The sling shall be designed for 60,000-lb capacity.

Protective Cover Kit — HLH GSE Item No. 90

The HLH must be provided with maximum protection against adverse environmental conditions during storage and shipment. This requirement may be satisfied by provisioning a protective cover kit.

In design and concept, the kit shall be similar to the CH-47 cover, P/N 64 SSMAC-D-0213 (Ref TM1-CH47-S). The kit shall consist of 13 sections to be placed on the HLH, overlapped, and laced together (blades to be removed from HLH).

The sections shall be made of nylon fabric per MIL-C-20696, Type 1,Class 2 Color O.D. per Fed. Std. 595 (or equivalent). The following sections shall be provided:

- Constant Section
- Nose
- Fwd Pylon
- Load Facing Pilot's Encl.
- Left & Right Fuel Pods
- Aft Pylon
- Aft Fuselage
- Left Outbd. Engine Structure
- Right Outbd. Engine Structure
- Fwd Landing Gear
- Left Main Ldg. Gear
- Right Main Ldg. Gear

Test Set, Dynamic Absorber — HLH GSE Item No. 101

During periodic checks of the dynamic absorbers (fuselage-mounted), a test set will be required to test and tune (adjust) the absorbers for frequencies and damping.

In concept, the test set shall be similar to the CH-47 test set (114G1218). It shall operate on 115/120 vac 60 Hz and shall consist of a recorder, a vibration pickup, mounting hardware, electrical cables and connectors.

New Equipment Requirement
(Supplemental Information)

Towing Bridle HLH GSE Item No. 103

A towing bridle is required during transportability operations.

In concept, the towing bridle shall be similar to the CH-47 bridle (114G1030). It shall provide for a 20,000 lb load (approx). Each leg shall be 34 ft long (approx).

Adapter, Pitch Housing/Cross Beam Assembly
HLH GSE Item No. 104

During maintenance operations on the pitch housing-cross beam assembly (including: pitch housing, cross beam, elastomeric bearing, pitch arm, and lag damper), an adapter is required to hold the assembly in a secure position.

The adapter shall be similar in concept and design to the CH-47 work and transportation stand forward transmission (114G1026). The adapter shall consist of a base, providing forklift slots, on which cradle supports for the assembly components shall be mounted to support and secure the assembly.

New Equipment Requirement
(Supplemental Information)

Engine Adapter, Bomb Hoist — HLH GSE Item No. P114

It will be necessary at various intervals to remove and replace each of the HLH engine assemblies. A standard bomb hoist (Aero 14B) will be used for lifting the 1,800-lb engine assemblies. An engine adapter is required to attach the bomb hoist to aircraft structure.

The adapter shall be a two-piece assembly, similar in concept to the design shown in the sketch below. In function, the adapter shall be bolted to structure to provide a support point to which the bomb hoist is fastened by a bolt. Fastening hardware shall be a part of this item.

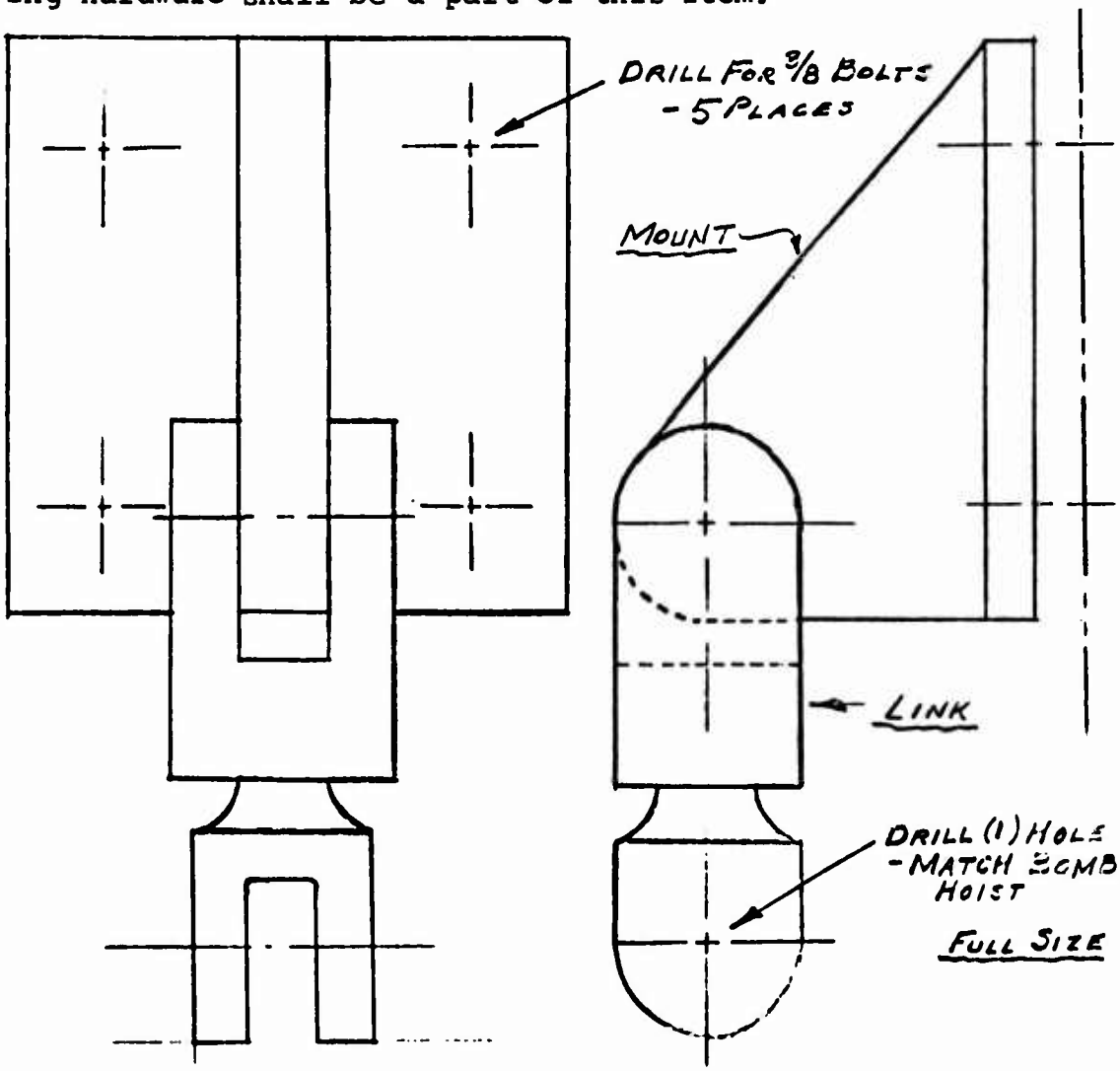

New Equipment Requirement
(Supplemental Information)

Lightweight Maintenance Davit HLH GSE Item No. 115

Many HLH components weigh in a 40-pound to 300-pound range. Removal and installation operations will require a lightweight hoisting device (Item 43). A rigid mounting point for Item 43, for each lifting application, is required. A davit, designed for universal application, shall provide the mounting point.

The davit shall be a tubular tripod, with each leg containing an integral fitting for connecting to a hard point in the aircraft structure. Each leg shall extend from its connecting hard point to a common cluster containing a single point attachment for the hook of Item 43. The triangular hard point pattern (approx 18 in. per side) shall be common for all lift applications. Davit legs shall be made of steel tubing (approx 1 in. dia x 20 in. long) with rod-end type clevis fittings welded in one end. The 3 tubes shall be joined at the other end with a machined clevis fitting in a cluster weld. Mounting hardware is included.

New Equipment Requirement
(Supplemental Information)

Adapter Set, Rotor Xmsn Mounting Bolts HLH GSE Item No. 118

Installation of forward and aft rotor transmission bolts requires application of torque to 3,620 ft-lb (dry). GSE Item No. 31 Power Unit (P/N SWE8100 by Sweeney Mfg. Co.) may be used with adapting equipment for this operation. The adapting equipment (adapter set) shall consist of the following items:

1 - Model SWE8104-6 Torque Multiplier (B.K. Sweeney Mfg. Co. FMC 87641)

1 - Base Fixture - In concept, this shall be similar to CH-47 adapter set anchor plates (114E5898-7 & -8). This base fixture shall be designed to function on each of the 4 mounting bolts for both the forward and aft transmissions.

1 - Drive and Socket Assembly - In concept, this shall be similar to CH-47 socket assemblies (114E5898-6), with a spline matched to the SWE8100 power unit and a driving socket for the 1.750 in. dia mounting bolts.

1 - Backing Bar - This shall be a steel rod of approximately 3/4 in. dia x 30 in. long. It shall be locked into a socket provided in the base fixture and shall extend to and react against a solid structural member of the aircraft.

NOTE: The above described torque equipment is based on utilization of a Sweeney Power Unit (existing in Army inventory) and a recently developed Sweeney Torque Multiplier.

As an alternate method, use of Power-Dyne Torque Wrench equipment (by Power-Dyne Corp. Middletown, Conn.) was considered. This equipment offers interesting characteristics, which should be subjected to an in-depth analysis and technical trade-off with the Sweeney equipment, at some future date.