AD-768 755

EFFECTS OF CANOPY GEOMETRY ON THE INFINITE MASS OPEINIG-SHOCK FACTOR OF A CROSS PARACHUTE WITH A W/L RATIO OF 0.264

William P. Ludtke

Naval Ordnance Laboratory

Prepared for:

Naval Material Command

31 July 1973

DISTRIBUTED BY:

NTIS

National Technical Information Service
U. S. DEPARTMENT OF COMMERCE
5285 Port Royal Road, Springfield Va. 22151

AD-768755

UNCLASSIFIED
Security Classification

DOCUMENT CONTROL DATA - R & D

(Security classification of title, body of abstract and indexing annotation must be entered when the overall report is classified)

1. ORIGINATING ACTIVITY (Corporate author) Commander Naval Ordnance Laboratory Silver Spring, Maryland 20910	2a. REPORT SECURITY CLASSIFICATION UNCLASSIFIED 2b. GROUP

3. REPORT TITLE

EFFECTS OF CANOPY GEOMETRY ON THE INFINITE MASS OPENING-SHOCK FACTOR OF A CROSS PARACHUTE WITH A W/L RATIO OF 0.264

4. DESCRIPTIVE NOTES (Type of report and inclusive dates)

5. AUTHOR(S) (First name, middle initial, last name)

William P. Ludtke

6. REPORT DATE 31 July 1973	7a. TOTAL NO. OF PAGES ~~24~~ 20	7b. NO. OF REFS 0
8a. CONTRACT OR GRANT NO b. PROJECT NO. MAT-03L-000/ZF61-512-001 c. d.	9a. ORIGINATOR'S REPORT NUMBER(S) NOLTR 73-157 9b. OTHER REPORT NO(S) (Any other numbers that may be assigned this report)	

10. DISTRIBUTION STATEMENT

Approved for public release; distribution unlimited.

11. SUPPLEMENTARY NOTES Details of illustrations in this document may be better studied on microfiche.	12. SPONSORING MILITARY ACTIVITY Naval Material Command Washington, D. C. 20360

13. ABSTRACT

The effects of cloth permeability, number of suspension lines, and suspension line length on the infinite mass opening-shock factor of the cross parachute were investigated in a wind tunnel. Forty-inch-diameter models with a canopy arm-to-length ratio (W/L) of 0.264 were deployed at wind-tunnel velocities of 150 or 200 miles per hour. Results of these tests indicate that cloth permeability influences the infinite mass shock factor significantly. A decrease in the cloth permeability results in an increase in the shock factor. Suspension line length and number of suspension lines do not appreciably affect the shock factor. The steady-state drag coefficients are affected by the cloth and suspension line parameters.

Reproduced by
NATIONAL TECHNICAL
INFORMATION SERVICE
U S Department of Commerce
Springfield VA 22151

DD FORM 1 NOV 65 1473 (PAGE 1)

S/N 0101-807-6801

UNCLASSIFIED
Security Classification

14 KEY WORDS	LINK A ROLE	LINK A WT	LINK B ROLE	LINK B WT	LINK C ROLE	LINK C WT
Cross parachute						
Opening shock						
Infinite mass						
Drag coefficient						
Cloth permeability						

EFFECTS OF CANOPY GEOMETRY ON THE INFINITE MASS OPENING-SHOCK FACTOR OF A CROSS PARACHUTE WITH A W/L RATIO OF 0.264

Prepared by:
William P. Ludtke

ABSTRACT: The effects of cloth permeability, number of suspension lines, and suspension line length on the infinite mass opening-shock factor of the cross parachute were investigated in a wind tunnel. Forty-inch-diameter models with a canopy arm-to-length ratio (W/L) of 0.264 were deployed at wind-tunnel velocities of 150 or 200 miles per hour. Results of these tests indicate that cloth permeability influences the infinite mass shock factor significantly. A decrease in the cloth permeability results in an increase in the shock factor. Suspension line length and number of suspension lines do not appreciably affect the shock factor. The steady-state drag coefficients are affected by the cloth and suspension line parameters.

NAVAL ORDNANCE LABORATORY
Silver Spring, Maryland

NOLTR 73-157 31 July 1973

EFFECTS OF CANOPY GEOMETRY ON THE INFINITE MASS OPENING-SHOCK FACTOR OF A CROSS PARACHUTE WITH A W/L RATIO OF 0.264

The investigation presented in this report is related to the infinite mass opening-shock characteristics of the cross parachute. This work was performed under the Independent Exploratory Development Program, Task No. MAT-03L-000/ZF61-512-001.

ROBERT WILLIAMSON II
Captain, USN
Commander

A. E. Seigel

A. E. SEIGEL
By direction

CONTENTS

	Page
INTRODUCTION	1
APPROACH	1
RESULTS	2

ILLUSTRATIONS

Figure	Title
1	Model Parachute Configurations
2	Model Parachute Construction Details
3	Wind-Tunnel Support System Side Elevation
4	Wind-Tunnel Instrumentation
5	Suggested Design Infinite Mass Shock Factors
6	Typical Deployment Force-Time Oscillographs

TABLES

Table	Title
1	Model Parachute Configurations
2	Materials Used in Model Parachute Construction
3	Summary of Infinite Mass Shock Factors
4	Steady-State Drag Coefficient Test Data

LIST OF SYMBOLS

D	Drag force, pounds
C_D	Coefficient of drag
V	Velocity, feet per second
ρ	Density of air, slugs per foot^3
q	Dynamic pressure, pounds per foot^2
S_o	Canopy reference area, foot^2
L	Length of canopy arm
W	Width of canopy arm
W/L	Canopy arm width-to-length ratio
F_{max}	Maximum opening-shock force, pounds
F_{ss}	Steady-state drag force of fully open parachute, pounds

DEFINITIONS

Permeability - the rate of airflow through cloth in ft^3/ft^2/min when measured under a pressure differential of 1/2 inch of water

Infinite Mass Shock Factor - the ratio of maximum opening-shock force to steady-state drag at constant wind-tunnel velocity

Snatch Factor - the ratio of the snatch force to the steady-state drag force

Snatch Force - the force required at line stretch to accelerate the mass of the canopy and its entrapped air to the velocity of the primary body

Primary Body - test stand

INTRODUCTION

Wind-tunnel tests and field tests of various cross parachute configurations have demonstrated reliable inflation and good aerodynamic efficiency at subsonic, transonic, and supersonic velocities. Obstacles to the efficient design and utilization of the cross parachute are definition of the infinite mass opening-shock factor and understanding the effects of various canopy parameters such as cloth permeability, number of suspension lines, and suspension line length on the infinite mass opening-shock factor. A series of wind-tunnel tests were proposed to investigate the effect of the aforementioned canopy parameters on the opening shock of the cross parachute.

APPROACH

Three series of model cross parachutes were designed, using a canopy cloth of different air permeability for each series. All models consisted of two panels 40 inches in length with a W/L = 0.264. The two panels were arranged to form the configurations illustrated in Figure 1. Each series of models consisted of three parachutes with 8, 16, and 24 suspension lines, respectively, for the same canopy cloth with suspension line lengths as shown in Table 1. In this manner, twenty-seven model parachutes were available for testing. Parachute construction and deployment sleeve details are illustrated in Figure 2, and the materials used in the construction of the models are enumerated in Table 2.

The wind-tunnel tests were conducted at the University of Maryland 7-foot by 11-foot Cross Section Subsonic Wind Tunnel at College Park, Maryland. The floor-mounted wind-tunnel support system, Figure 3, was designed to house the folded parachute prior to deployment. The parachute suspension lines were attached to the aft end of the housing which was connected to the calibrated aerodynamic force sensing device. An oscillograph was electrically connected to the force sensing device to graphically record the force time history of the deploying parachute, see Figure 4. The test parachute was carefully folded longitudinally and stowed in a deployment sleeve which enclosed the entire canopy and four inches of the suspension lines. The center portion of the canopy was locked into the deployment sleeve. A small extraction parachute was attached to the deployment sleeve and provided the deployment force for the test parachute. Deployment was initiated by withdrawal of a solenoid-operated locking pin. Each parachute was subjected to three valid test runs at wind-tunnel velocities of 150 or 200 miles per hour. The wind-tunnel velocity was reduced from 200 miles per

hour to 150 miles per hour for the number 1 series of parachutes due to the canopy instability caused by the low cloth permeability. Sixteen-millimeter motion picture coverage at 400 frames per second was made of one test of each parachute. After deployment of the test parachute, the velocity of the wind tunnel was verified to be unchanged and a steady-state drag recorded by the oscillograph.

Test data were reduced to coefficient form by means of the following formulae:

$$C_D = \frac{D}{qS_o}$$

$$q = 1/2\rho V^2$$

$$S_o = 2LW - W^2$$

$$\text{INFINITE MASS SHOCK FACTOR} = \frac{\text{Maximum Shock Force}}{\text{Steady-State Drag Force}}$$

The reference area of all parachute models used in this test is 5.092 feet^2.

RESULTS

With reference to Table 3, the results of this study demonstrate that the permeability of the cross parachute cloth is the dominant element affecting the magnitude of the parachute shock factor. The number of suspension lines and suspension line lengths do not appreciably alter the opening-shock characteristics. Suggested design values of infinite mass opening-shock factor are illustrated in Figure 5. Typical cross parachute deployment force time oscillographs are illustrated in Figure 6.

Analysis of the infinite mass snatch factors obtained from the test data indicates a range of values from 0.486 to 1.358. Trends related to the parachute geometric and airflow factors under study were not evident. The snatch factors were influenced by the interaction of the aerodynamic drag of the extraction parachute and some inconsistency caused by the locking feature of the deployment bag. The snatch factors determined in this test series do not appear to be truly indicative of this type of parachute.

The parachute drag coefficients presented in Table 4 were obtained from the steady-state drag run of the various parachutes. These data indicate that increasing the permeability of the canopy cloth reduces the drag of the parachute while an increase in the suspension line length or number of suspension lines improves the drag-producing capability.

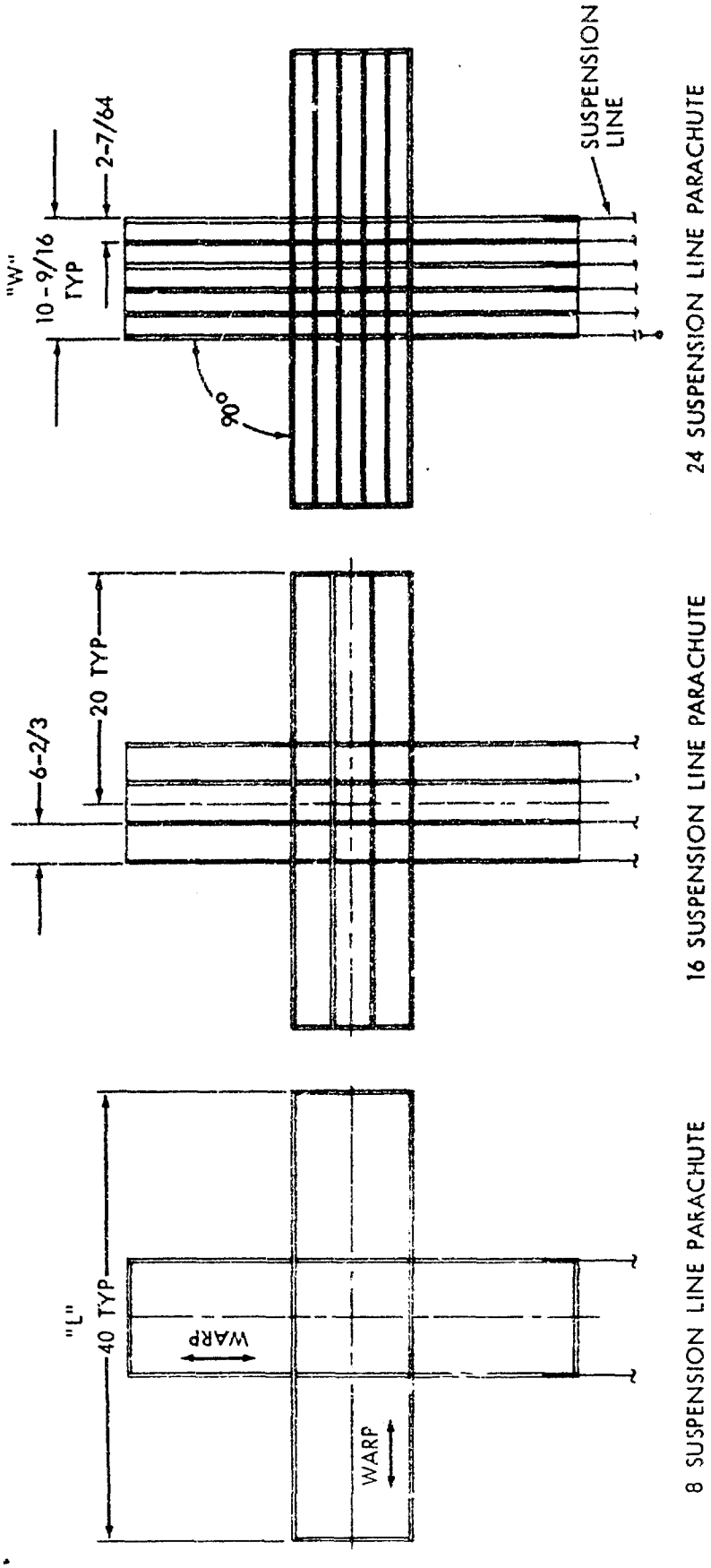

FIG. 1 MODEL PARACHUTE CONFIGURATIONS-CONSTRUCTION DETAILS ARE SHOWN IN FIG. 2

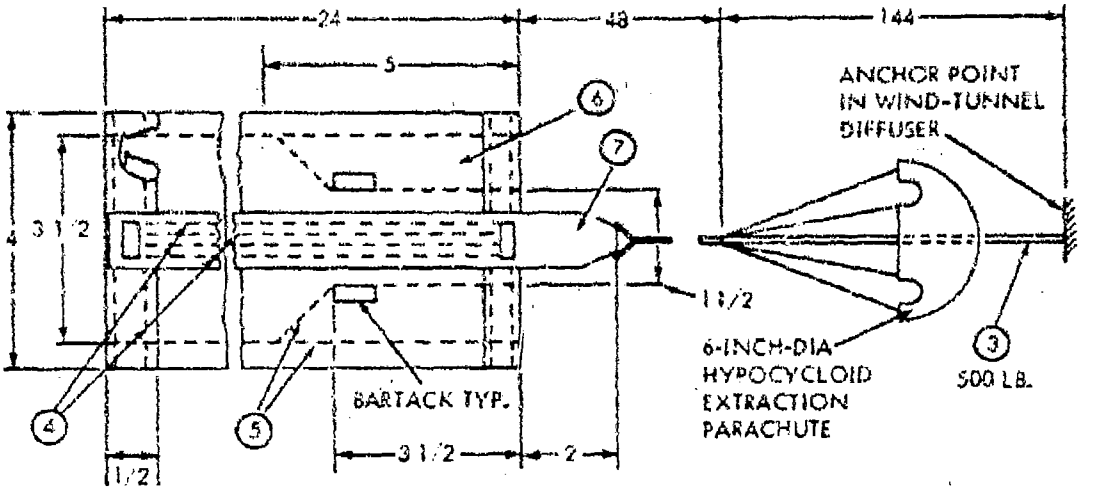

DEPLOYMENT SLEEVE ASSEMBLY

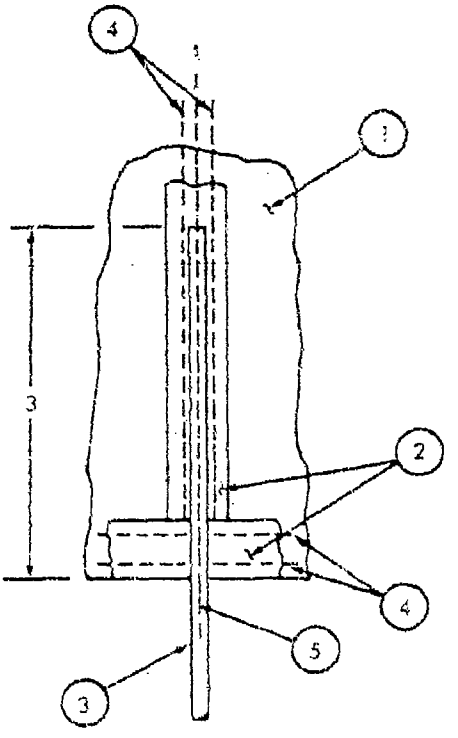

SKIRT HEM - SUSPENSION LINE ASS'Y

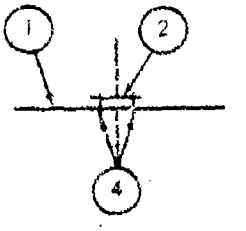

TYPICAL TAPE - CANOPY CROSS SECTION

FIG. 2 MODEL PARACHUTE CONSTRUCTION DETAILS
SEE TABLE 1 FOR MATERIALS IDENTIFICATION

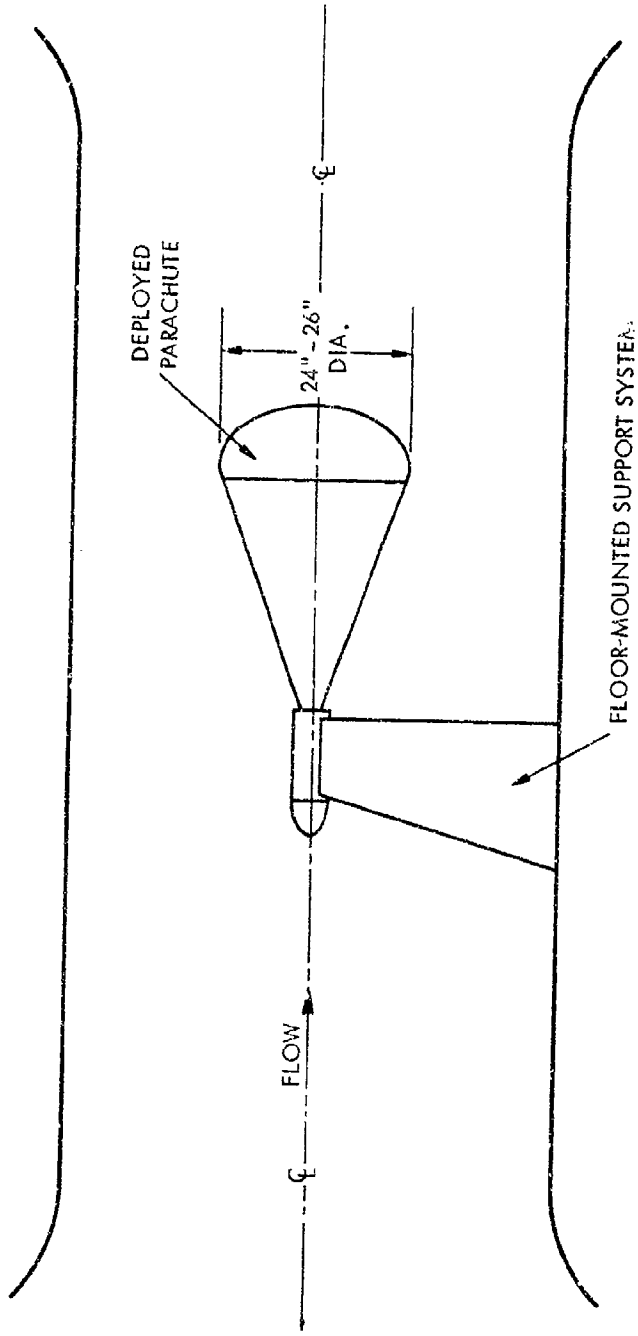

FIG. 3 WIND-TUNNEL SUPPORT SYSTEM SIDE ELEVATION

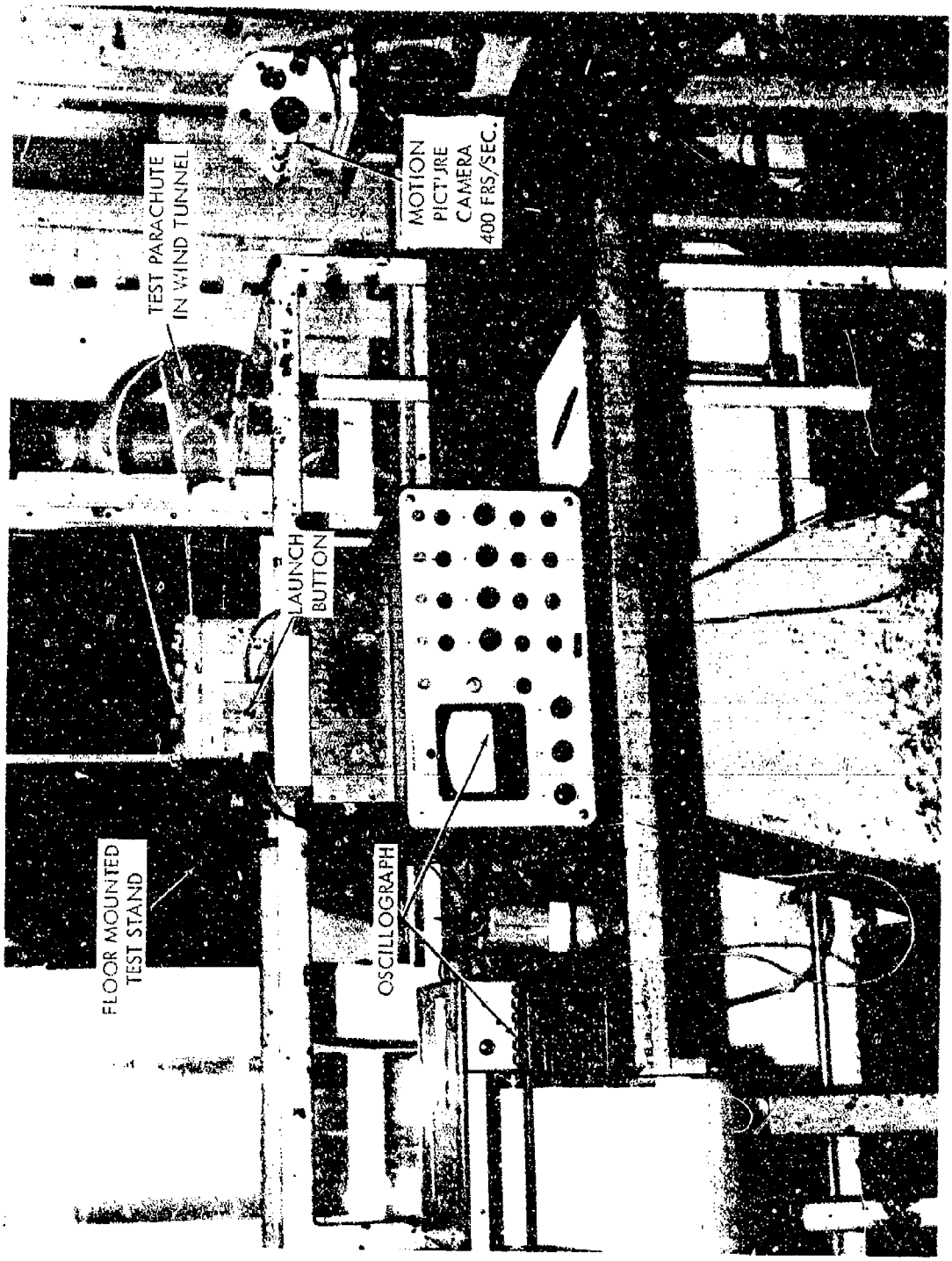

FIG. 4 WIND-TUNNEL INSTRUMENTATION

Reproduced from best available copy.

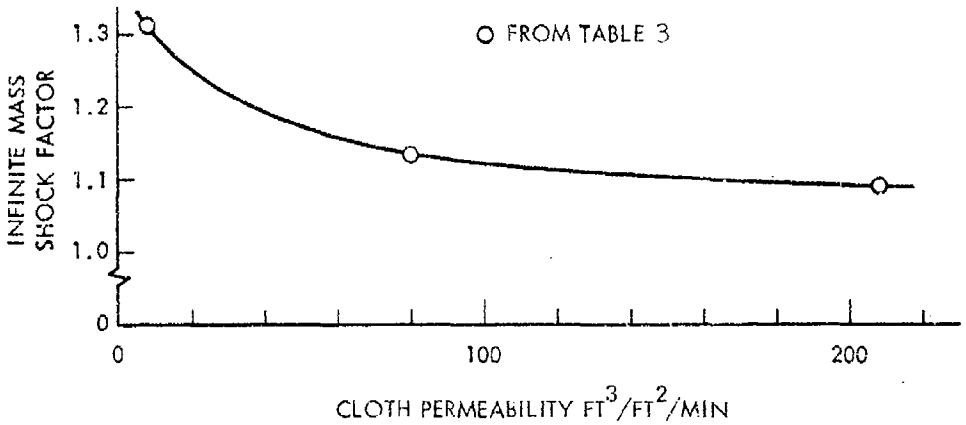

FIG. 5 SUGGESTED DESIGN INFINITE MASS SHOCK FACTORS

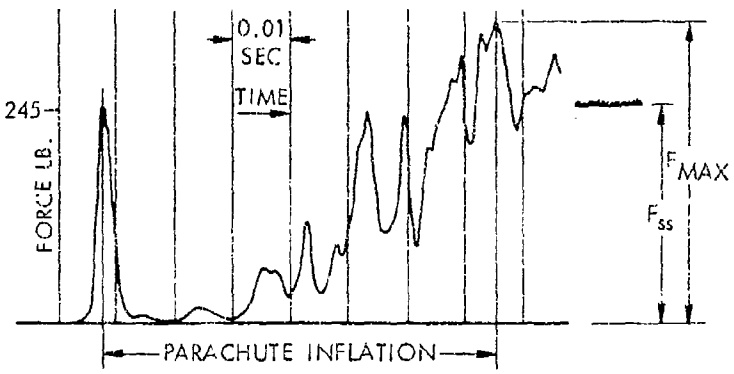

CLOTH PERMEABILITY = 8 $FT^3/FT^2/MIN$, 24 SUSPENSION LINES @ 1.0 DIA.

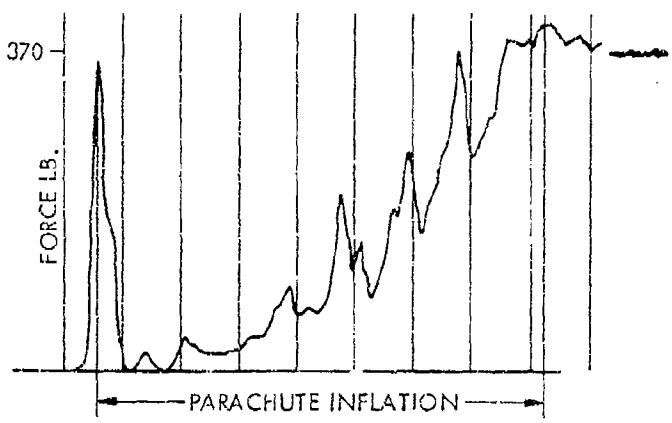

CLOTH PERMEABILITY = 80 $FT^3/FT^2/MIN$, 24 SUSPENSION LINES @ 1.4 DIA.

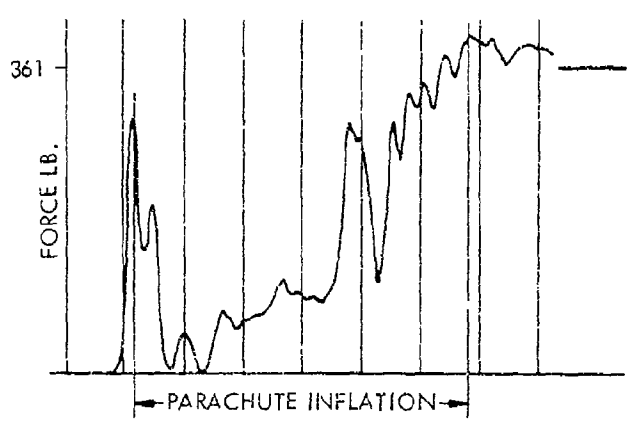

CLOTH PERMEABILITY = 208 $FT^3/FT^2/MIN$, 24 SUSPENSION LINES @ 1.4 DIA.

FIG. 6 TYPICAL DEPLOYMENT FORCE - TIME OSCILLOGRAPHS

TABLE 1 - MODEL PARACHUTE CONFIGURATIONS

PARACHUTE SERIES	1			2			3		
CLOTH PERMEABILITY $FT^3/FT^2/MIN$	8			80			208		
NUMBER OF SUSPENSION LINES	8	16	24	8	16	24	8	16	24
SUSPENSION LINE LENGTH DIAMETERS	1.0, 1.4, 1.8	1.0, 1.4, 1.8	1.0, 1.4, 1.8	1.0, 1.4, 1.8	1.0, 1.4, 1.8	1.0, 1.4, 1.8	1.0, 1.4, 1.8	1.0, 1.4, 1.8	1.0, 1.4, 1.8

TABLE 2 - MATERIALS USED IN MODEL PARACHUTE CONSTRUCTION

ITEM	MATERIAL	PARACHUTE SERIES		
		NUMBER 1	NUMBER 2	NUMBER 3
1	CLOTH	MIL-C-7020, TYPE I HEAT SET, AIR PERMEABILITY 8FT^3/FT^2/MIN @ 1/2-INCH WATER PRESSURE DIFFERENTIAL	MIL-C-7020, TYPE I	4.75 OZ./YD^2, DOBBY WEAVE, AIR PERMEABILITY 208 FT^3/FT^2/MIN @ 1/2-INCH WATER PRESSURE DIFFERENTIAL
2	TAPE	MIL-T-5038, TYPE III, 1/2-INCH WIDE	MIL-T-5038, TYPE III, 1/2-INCH WIDE	MIL-T-5038, TYPE III 1/2-INCH WIDE
3	SUSPENSION[1] LINE	MIL-C-17183	MIL-C-17183	MIL-C-17183
4	STITCHES [2]	TYPE 301, FED STD 751, 9 TO 12 STITCHES PER INCH, 2 ROWS ON 1/4-INCH NEEDLE GAUGE.		
5	STITCHES	TYPE 301, FED STD 751, 9 TO 12 STITCHES PER INCH, SINGLE ROW		
6	CLOTH	MIL-C-7219, TYPE II		
7	TAPE	MIL-T-5038, TYPE I, INCH WIDE		

1 8 SUSPENSION LINE CANOPIES USE, TYPE VI, 500-LB TENSILE STRENGTH
16 SUSPENSION LINE CANOPIES USE, TYPE IV, 300-LB TENSILE STRENGTH
24 SUSPENSION LINE CANOPIES USE, TYPE III, 200-LB TENSILE STRENGTH

2 ALL THREAD, V-T-295. TYPE I OR II, CLASS 1 OR 2, SIZE B

TABLE 3 - SUMMARY OF INFINITE MASS SHOCK FACTORS

CLOTH PERMEABILITY	NUMBER OF SUSPENSION LINES	SUSPENSION LINE LENGTH (DIAMETERS)	SHOCK FACTOR		
			AVG. OF 3 TESTS	EFFECT OF LINE LENGTH	EFFECT OF CLOTH PERMEABILITY
208	24	1.0	1.080		1.089
	16		1.068	1.073	
	8		1.071		
	24	1.4	1.119		
	16		1.080	1.093	
	8		1.080		
	24	1.8	1.124		
	16		1.078	1.101	
	8		1.101		
80	24	1.0	1.115		
	16		1.110	1.120	
	8		1.135		
	24	1.4	1.104		
	16		1.111	1.110	1.130
	8		1.116		
	24	1.8	1.104		
	16		1.116	1.159	
	8		1.257		
8	24	1.0	1.360		
	16		1.406	1.362	
	8		1.321		
	24	1.4	1.215		
	16		1.228	1.219	1.312
	8		1.215		
	24	1.8	1.356		
	16		1.377	1.354	
	8		1.330		

TABLE 4 - STEADY-STATE DRAG COEFFICIENT TEST DATA.

CLOTH PERMEABILITY $FT^3/FT^2/MIN$	VELOCITY V F.P.S.	DRAG COEFFICIENT								
		8 SUSPENSION LINES			16 SUSPENSION LINES			24 SUSPENSION LINES		
		SUSPENSION LINE LENGTH / CANOPY DIAMETER			SUSPENSION LINE LENGTH / CANOPY DIAMETER			SUSPENSION LINE LENGTH / CANOPY DIAMETER		
		1.0 L	1.4L	1.8 L	1.0 L	1.4 L	1.8 L	1.0 L	1.4 L	1.8 L
8	220	0.788	0.812	0.853	0.817	0.894	0.928	0.829	0.914	0.928
80	293	0.574	0.635	0.635	0.628	0.708	0.729	0.651	0.708	0.812
208	293	0.582	0.614	0.610	0.585	0.672	0.744	0.616	0.693	0.733