AD-768 445

CALIBRATION, TEST, FIELD OPERATION AND REFURBISHMENT OF BALLOON BORNE RADIOMETER

Arthur G. DeBell

Rockwell International Corporation

Prepared for:

Air Force Cambridge Research Laboratories
Defense Advanced Research Projects Agency

July 1973

DISTRIBUTED BY:

NTIS

National Technical Information Service
U. S. DEPARTMENT OF COMMERCE
5285 Port Royal Road, Springfield Va. 22151

Unclassified

Security Classification

AD- 768445

DOCUMENT CONTROL DATA - R & D

(Security classification of title, body of abstract and indexing annotation must be entered when the overall report is classified)

1. ORIGINATING ACTIVITY (Corporate author)

Rockwell International/Electronics Group
3370 Miraloma Avenue
Anaheim, California 92803

2a. REPORT SECURITY CLASSIFICATION

Unclassified

2b. GROUP

3. REPORT TITLE

CALIBRATION, TEST, FIELD OPERATION AND REFURBISHMENT OF BALLOON BORNE RADIOMETER

4. DESCRIPTIVE NOTES (Type of report and inclusive dates)

Scientific. Final. 25 February 1972 - 30 June 1973 Approved 7 Sep 73

5. AUTHOR(S) (First name, middle initial, last name)

Arthur G. DeBell

6. REPORT DATE

July 1973

7a. TOTAL NO. OF PAGES

~~76~~ 74

7b. NO. OF REFS

None

8a. CONTRACT OR GRANT NO. ARPA Order No. 1366

F19628-72-C-0262

b. PROJECT NO

1366 n/a n/a

c. DOD ELEMENT 62301D

d. DOD SUBELEMENT n/a

9a. ORIGINATOR'S REPORT NUMBER(S)

C73-697/201

9b. OTHER REPORT NO(S) (Any other numbers that may be assigned this report)

AFCRL-TR-73-0540

10. DISTRIBUTION STATEMENT

A - Approved for public release; distribution unlimited.

11. SUPPLEMENTARY NOTES

This research was supported by the Defense Advanced Research Projects Agency.

12. SPONSORING MILITARY ACTIVITY

Air Force Cambridge Research Laboratories (OP) L.G. Hanscom Field Bedford, Massachusetts 01730

13. ABSTRACT

This report describes Autonetics/Rockwell International's work on an ARPA sponsored contract in which technical assistance is furnished to the Air Force Cambridge Research Laboratories. A cryogenically cooled, filtered infrared radiometer built on a previous contract has been calibrated, installed on a high altitude balloon platform, flown three times and refurbished between flights.

This radiometer has several unique features which include the options for the remote operation of two filter wheels each containing six filters at helium temperature, and a rotary chopper which may be run at 200 cycles per second or positioned open. It contains a 10" diameter Cassegrain telescope with nine field stops in its focal plane. Each of these field stops is reimaged on a separate detector for stray radiation rejection. The fields of view of the detectors are small and varied in size and shape. The telescope is mounted on a two axis alt azimuth/artillery type/servo operated gimbal which makes sky scans under the control of an on-board programmer. The cryogenically cooled telescope is fitted with an antifrost device which protects the system at altitudes above 35,000 ft. The system is capable of absolute spectral radiometry in bands from 3 to 25 microns.

Reproduced by
NATIONAL TECHNICAL
INFORMATION SERVICE
U S Department of Commerce
Springfield VA 22151

DD FORM 1 NOV 65 1473

Unclassified

Security Classification

14 KEY WORDS	LINK A ROLE	LINK A WT	LINK B ROLE	LINK B WT	LINK C ROLE	LINK C WT
Background Atmospheric Infrared						
Atmospheric Infrared Radiometry						
Atmospheric Radiometric Measurements						
Infrared Atmospheric Radiometry						
Cryogenic Infrared Radiometry						
Balloon Borne Radiometer						
Balloon Borne Infrared Radiometer						

AFCRL-TR-73-0540

CALIBRATION, TEST, FIELD OPERATION AND REFURBISHMENT OF BALLOON BORNE RADIOMETER

By

Arthur G. DeBell

Electronics Group

Rockwell International

3370 Miraloma Avenue

Anaheim, California 92803

Contract No. F19628-72-C-0262

Project No. 1366

FINAL REPORT

25 February 1972 Through 30 June 1973

July 1973

Contract Monitor: Vernon D. Turner,
Optical Physics Laboratory

Distribution Statement
Approved for public release; distribution unlimited.

Sponsored by

Defense Advanced Research Projects Agency

ARPA Order No. 1366

Monitored by

Air Force Cambridge Research Laboratories

Air Force Systems Command

United States Air Force

Bedford, Massachusetts 01730

i

ABSTRACT

This report describes Autonetics/Rockwell International's work on an ARPA sponsored contract in which technical assistance is furnished to the Air Force Cambridge Research Laboratories. A cryogenically cooled, filtered infrared radiometer built on a previous contract has been calibrated, installed on a high altitude balloon platform, flown three times and refurbished between flights.

This radiometer has several unique features which include the options for the remote operation of two filter wheels each containing six filters at helium temperature, and a rotary chopper which may be run at 200 cycles per second or positioned open. It contains a 10" diameter Cassegrain telescope with nine field stops in its focal plane. Each of these field stops is reimaged on a separate detector for stray radiation rejection. The fields of view of the detectors are small and varied in size and shape. The telescope is mounted on a two axis alt azimuth/artillery type/servo operated gimbal which makes sky scans under the control of an on-board programmer. The cryogenically cooled telescope is fitted with an antifrost device which protects the system at altitudes above 35,000 ft. The system is capable of absolute spectral radiometry in bands from 3 to 25 microns.

CONTENTS

	Page
1. Summary	1-1
2. Calibration	2-1
2.1 Radiometric Calibration	2-4
2.2 Focus and Field of View	2-5
2.3 Mapping the Field of View	2-7
3. Installation on Gondola	3-1
4. Flight No. 1	4-1
5. First Refurbishment	5-1
6. First Altitude Chamber Test	6-1
7. Second and Third Altitude Chamber Tests	7-1
8. Second Balloon Flight	8-1
9. Second Reburbishment	9-1
10. Third Balloon Flight	10-1
11. Flight Preparation Instructions	11-1
11.1 Pre-Cooldown Checklist	11-1
11.2 GN_2 Purge and LN_2 Fill Procedure	11-3
11.3 Nitrogen Cooldown Checklist	11-4
11.4 Helium Cooldown Checklist	11-6
11.5 Post-Cooldown Preflight Checklist	11-7
12. Instrument Modifications/Drawing Revisions	12-1
13. Recommendations	13-1
13.1 Recommended Changes to Equipment	13-1
13.1.1 Cover Mechanism	13-1
13.1.2 Liquid Nitrogen Dewars	13-1
13.1.3 Electronic Cannisters	13-1
13.1.4 Antifrost Device	13-1

ILLUSTRATIONS

Figure		Page
1-1.	Radiometer System	1-3
2-1.	Radiometric Calibration Set-Up	2-2
2-2.	Laboratory Calibrator	2-3
2-3.	Focus and Field of View Arrangement	2-6
3-1.	View of Gondola	3-2
3-2.	View of Gondola	3-3
3-3.	View of Gondola	3-4
12-1.	(7-24) Schematic - LN_2 Level Control Circuit	12-2
12-2.	Input Electronics Temperature Control Circuit	12-3
12-3.	(6-2) GN_2 Generator Plumbing Schematic	12-5
12-4.	(6-3) LN_2 Supply Schematic	12-7
12-5.	(7-8) Schematic-Output Electronics Circuit Board Interconnections	12-9
12-6.	(7-31) Schematic - Control Electronics Boards 3009 and 3011	12-11
12-7.	(7-16) Schematic - Control Electronics Board 3004	12-13
12-8.	(7-15) Schematic - Control Electronics Board 3003	12-15
12-9.	(7-23) Schematic - Control Electronics Board 3012	12-17
12-10.	(7-17) Schematic - Control Electronics Board 3005	12-19
12-11.	(7-14) Schematic - Control Electronics Board 3002	12-21
12-12.	(7-13) Schematic - Control Electronics Board 3001	12-23
12-13.	(7-12) Schematic - Control Electronics Circuit Board Interconnections	12-25
12-14.	(7-10) Schematic - Output Electronics Board 2002	12-27
12-15.	(7-5) Schematic - Input Electronics Board 1001	12-29
12-16.	(7-20) Schematic - Control Electronics Board 3008	12-31
12-17.	(7-19) Schematic - Control Electronics Board 3007	12-33
12-18.	(4-2) Schematic of Inflight Cover Assembly	12-35
12-19.	(7-2) Schematic - Sensor Head Electronics	12-37
12-20.	(5-2) Schematic - Gimbal	12-39

1. SUMMARY

Autonetics Contract F19628-72-C-0262 with the Air Force Cambridge Research Laboratories is one in which Autonetics has furnished technical assistance to the Air Force in calibrating, installing and flying on a high altitude balloon platform, a radiometer which Autonetics had previously built for AFCRL under Contract F19628-70-C-0126. Three flights were made under Air Force direction from Holloman Air Force Base, New Mexico. Autonetics refurbished the radiometer between these flights. In this contract the contractor's role is largely that of an assistant wherein the contractor endeavors to provide the assistance required by AFCRL on a schedule determined by AFCRL.

A unique feature of the radiometer is the ability to remotely operate its many controls by means of commands radioed from the ground. Figure 1-1 is a schematic of the radiometer system.

The light gathering system of the radiometer is a well baffled Cassegrain telescope with a 10 in. diameter primary mirror. As the telescope's converging beam of radiation approaches its focus it passes through the plane of the rotary chopper, which upon command is capable of interrupting the beam at 200 Hz, allowing the beam to pass through uninterrupted, or blocking the beam. After passing through the Irtran-VI window and the Irtran-VI field lens which seal the vacuum space, the beam passes into the helium gas cooled reimaging cavity. The beam comes to focus on a compound field stop which contains nine individual openings each twice as large as the corresponding detector mask.

Provisions have been made so that a filter can be placed at each individual field stop aperture. The converging beam(s) continues through the field stop and diverges to imping on an annular almost flat 4th order corrector mirror and still diverging is reflected back to a sphere from which they are focused on the nine detectors. A linear demagnification of two is accomplished in the reimaging. The Cu:Ge detectors are individually masked to obtain the desired field of view.

The two remotely operated filter wheels are located in planes between the field lens and the field stop. Each wheel has six positions, each position has the capability of containing two filters either spectral or neutral density. The filter wheels (as well as the reimaging mirrors and baffles) are cooled by liquid helium boil-off and operate at about 10 K. They are changeable by means of a solenoid actuated ratchet mechanism controlled by radio commands from the ground or from an on-board programmer. A signal representing the position of the filter wheels is transmitted to the ground by telemetry.

The detectors have FET preamplifiers mounted in close proximity to them and are biased by a feedback circuit to extend the dynamic range and frequency response.

The preamplifier of each detector feeds its signal into parallel linear and logarithmic amplifiers. The linear amplifiers have a wide range of gain settings which are controlled from the ground. The system contains an electronic calibrator which sends signals through the electronics upon command, to check the proper operation of the amplifiers.

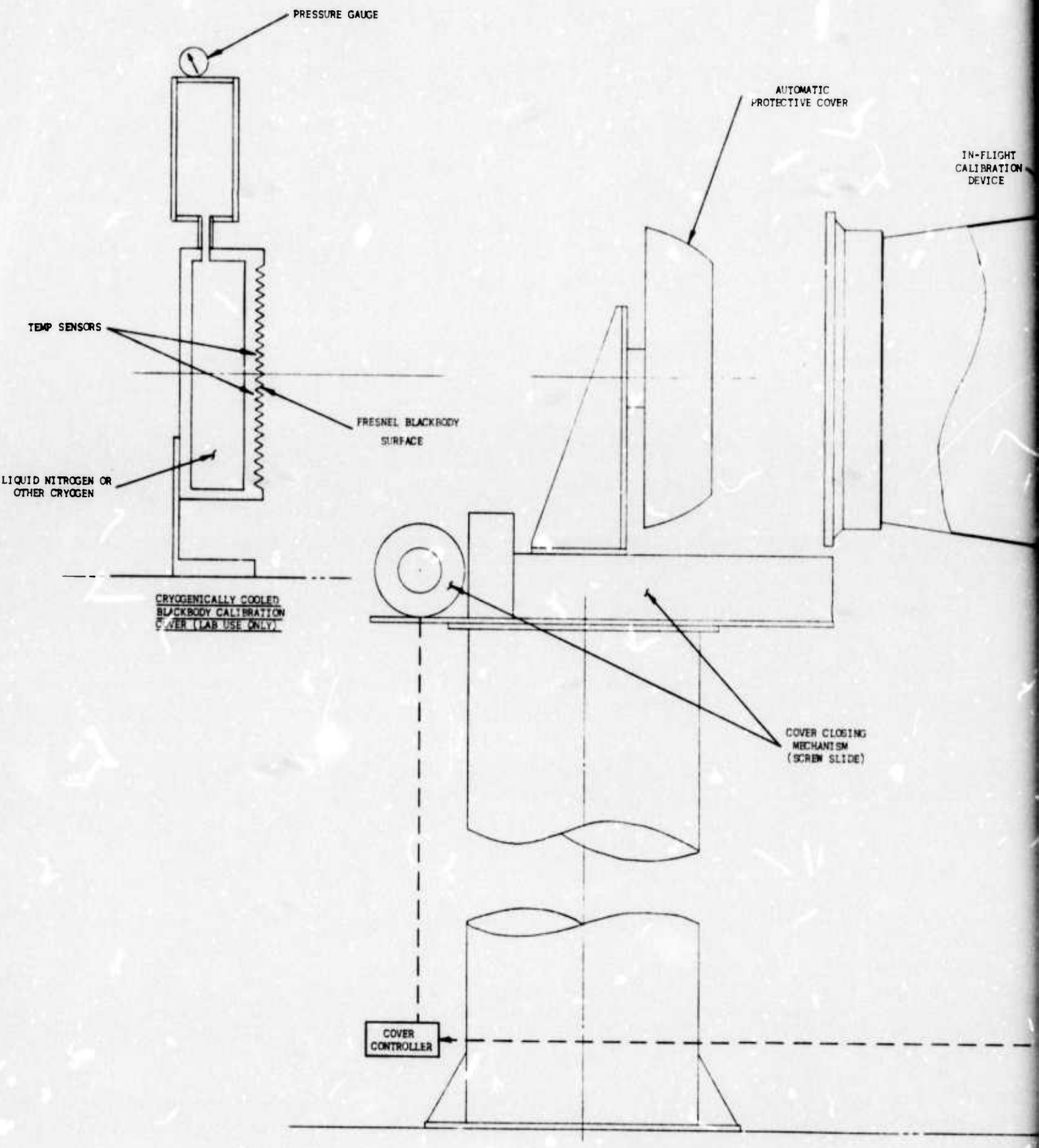
PRESSURE GAUGE
AUTOMATIC PROTECTIVE COVER
IN-FLIGHT CALIBRATION DEVICE
TEMP SENSORS
FRESNEL BLACKBODY SURFACE
LIQUID NITROGEN OR OTHER CRYOGEN
CRYOGENICALLY COOLED BLACKBODY CALIBRATION COVER (LAB USE ONLY)
COVER CLOSING MECHANISM (SCREW SLIDE)
COVER CONTROLLER

A

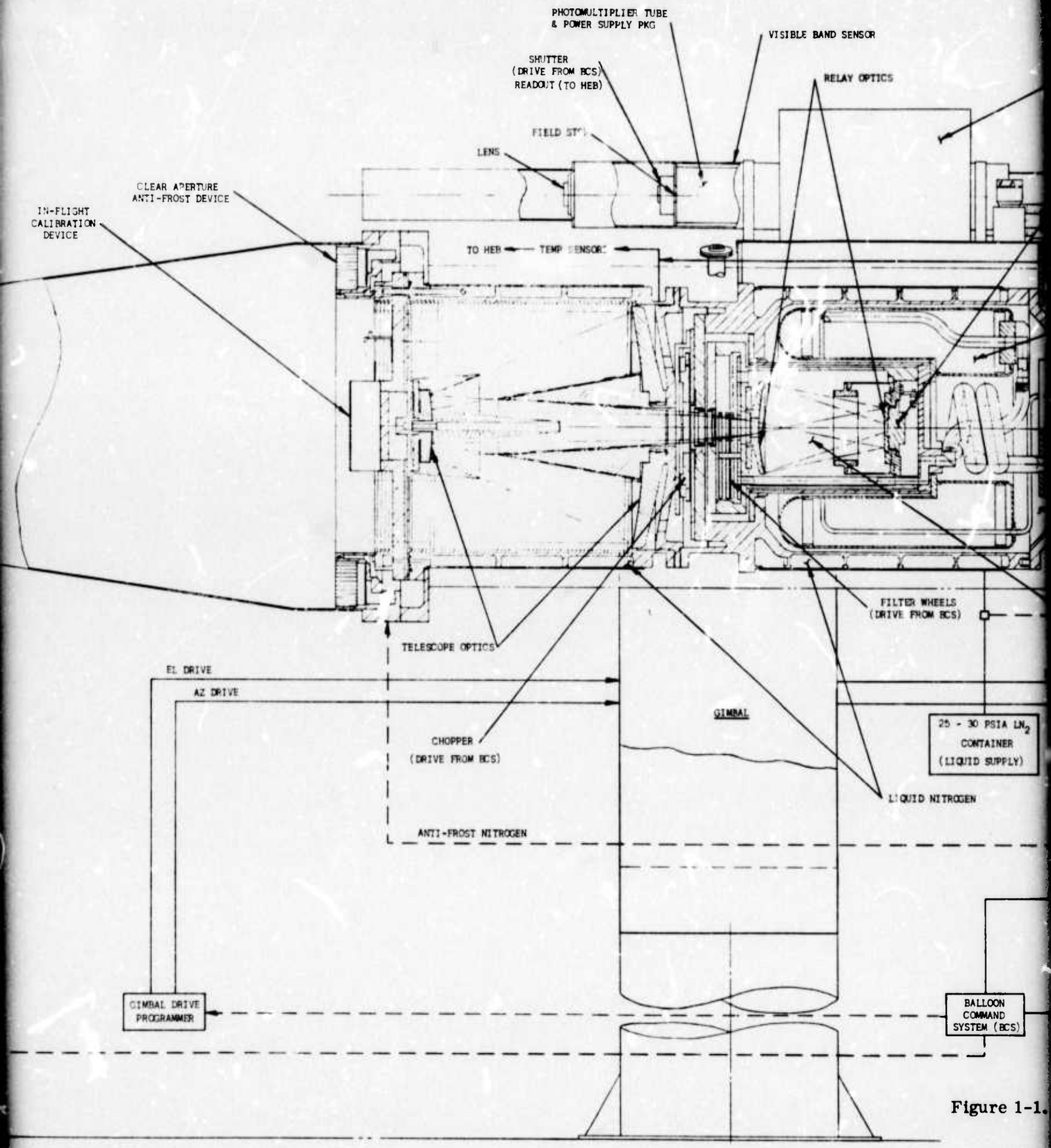
PHOTOMULTIPLIER TUBE
& POWER SUPPLY PKG
VISIBLE BAND SENSOR
SHUTTER
(DRIVE FROM BCS)
READOUT (TO HEB)
RELAY OPTICS
FIELD STOP
LENS
CLEAR APERTURE
ANTI-FROST DEVICE
IN-FLIGHT
CALIBRATION
DEVICE
TO HEB
TEMP SENSOR
FILTER WHEELS
(DRIVE FROM BCS)
TELESCOPE OPTICS
EL DRIVE
AZ DRIVE
GIMBAL
25 - 30 PSIA LN_2
CONTAINER
(LIQUID SUPPLY)
CHOPPER
(DRIVE FROM BCS)
LIQUID NITROGEN
ANTI-FROST NITROGEN
GIMBAL DRIVE
PROGRAMMER
BALLOON
COMMAND
SYSTEM (BCS)

Figure 1-1.

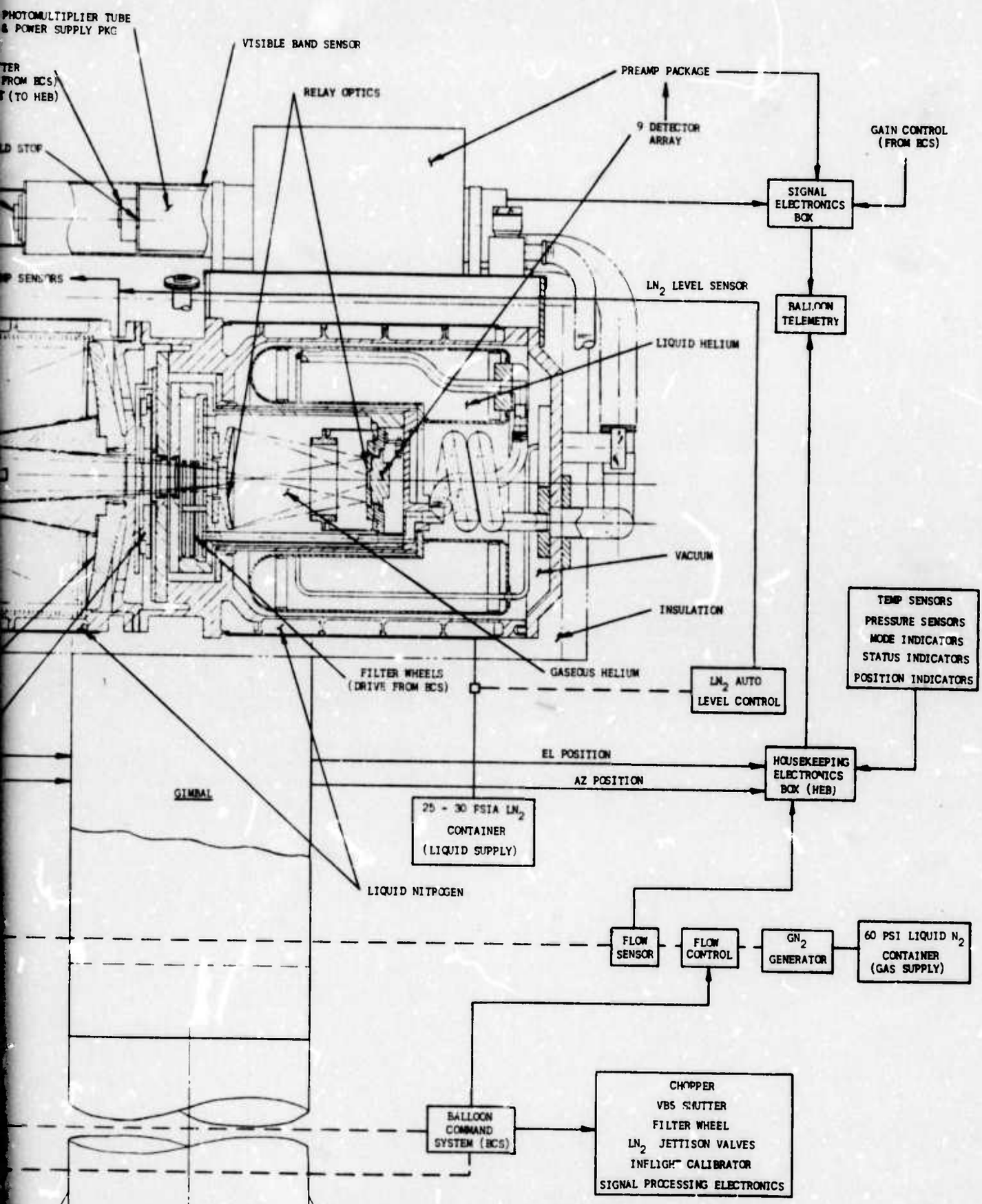

Figure 1-1. Radiometer System

The Cassegrain telescope is kept at 77 K by a liquid nitrogen jacket and the reimaging optics are kept at approximately 10 K by boil-off gas from the liquid helium tank. Frost is prevented from forming on the cooled telescope optics by means of a clear aperture antifrost device which extends out in front of the telescope. The antifrost device is capable of protecting the system, when utilizing the gaseous nitrogen produced from an on-board gas generator, at altitudes as low as 35,000 ft. The system performs absolute radiometry in the band from 3 to 25 microns.

During the flights radiometric scans were made of the sky from an altitude of approximately 90,000 ft. The telescope was scanned 180 deg in azimuth while it was systematically elevated at various angles from 0 to 60 deg. Spectral filters were inserted during the scans to define various bands from 9 to 22.7 microns. Neutral density filters were inserted and gain changes were made at appropriate times. Both "AC" and "DC" signals were recorded. Calibration signals were inserted as the gimbals reversed direction at the end of each scan.

This report describes the calibration of the instrument, its installation on the gondola, and its refurbishment between flights.

The improvements in the procedures for operating the instrument which were developed during its use and the mechanical and circuit changes made as a result of field experience are documented. A section on recommended equipment improvements for future flights is included.

2. CALIBRATION

Figure 2-1 illustrates schematically the laboratory set up which was used to accomplish the radiometric calibration of the instrument. The laboratory calibrator which is the key piece of equipment used in the calibration is unique and requires description.

The laboratory calibrator is a variable temperature blackbody source which is used for the pre-flight calibration of the infrared sensor. The device consists essentially of an insulated cryogenic pressure vessel in which the blackbody source, a circular, grooved plate, forms part of the wall. The heavy walled vessel can be operated at any pressure up to approximately 300 psi. The temperature can be varied almost continuously from under 77 K to 300 K. Large incremental changes of temperature previously had been achieved by using different cryogens. For a given cryogenic liquid, controlled, continuous changes of temperature are created at present by varying the pressure within the dewar.

In order to proceed more expeditiously with the wide range calibration which was required, a 1000 watt calrod type heater was mounted inside the cryogen pressure cavity. When the electrical input to this heater is controlled by a continuously variable transformer, and the cavity contains pressurized gaseous nitrogen or a mixture of gaseous and liquid nitrogen, and the pressure adjusted as required, a wide range of stable temperatures may be obtained much more easily and quickly than by changing cryogens.

Figure 2-2 is a schematic drawing which shows the calibration device as it appears when attached to the shroud of the infrared sensor. The basic parts are the pressure vessel, calibration source plate, valves and pressure regulators, temperature sensors, and mounting devices. The outside of the calibration source plate is grooved with concentric circular grooves, and then sandblasted and black anodized in order to provide a high emissivity.

Concentric circular grooves are also machined on the inside of the plate in order to increase the heat transfer between the cryogen and plate. Mounted on the top of the dewar are a fill valve, vent valve, multi-pin electrical feed-through connector, burst disk, pressure relief valve, and pressure gauge. The temperature is monitored at a number of points within the source plate by copper constantan thermocouples. The sensor output leads are connected to the multi-pin electrical connector. Rigid attachment of the calibration device to the sensor is accomplished by clamps (not shown) which hold the sensor shroud against the mounting ring. The bottom mount supports the calibration device on a table. The pressure vessel is covered with Armaflex insulating material.

Proper calibration of the radiometer with the laboratory calibration device required that the faceplate of the laboratory calibrator be positioned at the end of the antifrost shround and that no significant radiant energy be allowed to get into the radiometer except that emitted from the calibrator faceplate. This requires that the antifrost shroud be cooled to 77 K, so that any radiance emitted from its inside surface, when reflected by the faceplate into the radiometer, will be very small compared to the emitted radiance of the faceplate itself. For this purpose a shroud cooler has been constructed for use with the laboratory calibrator.

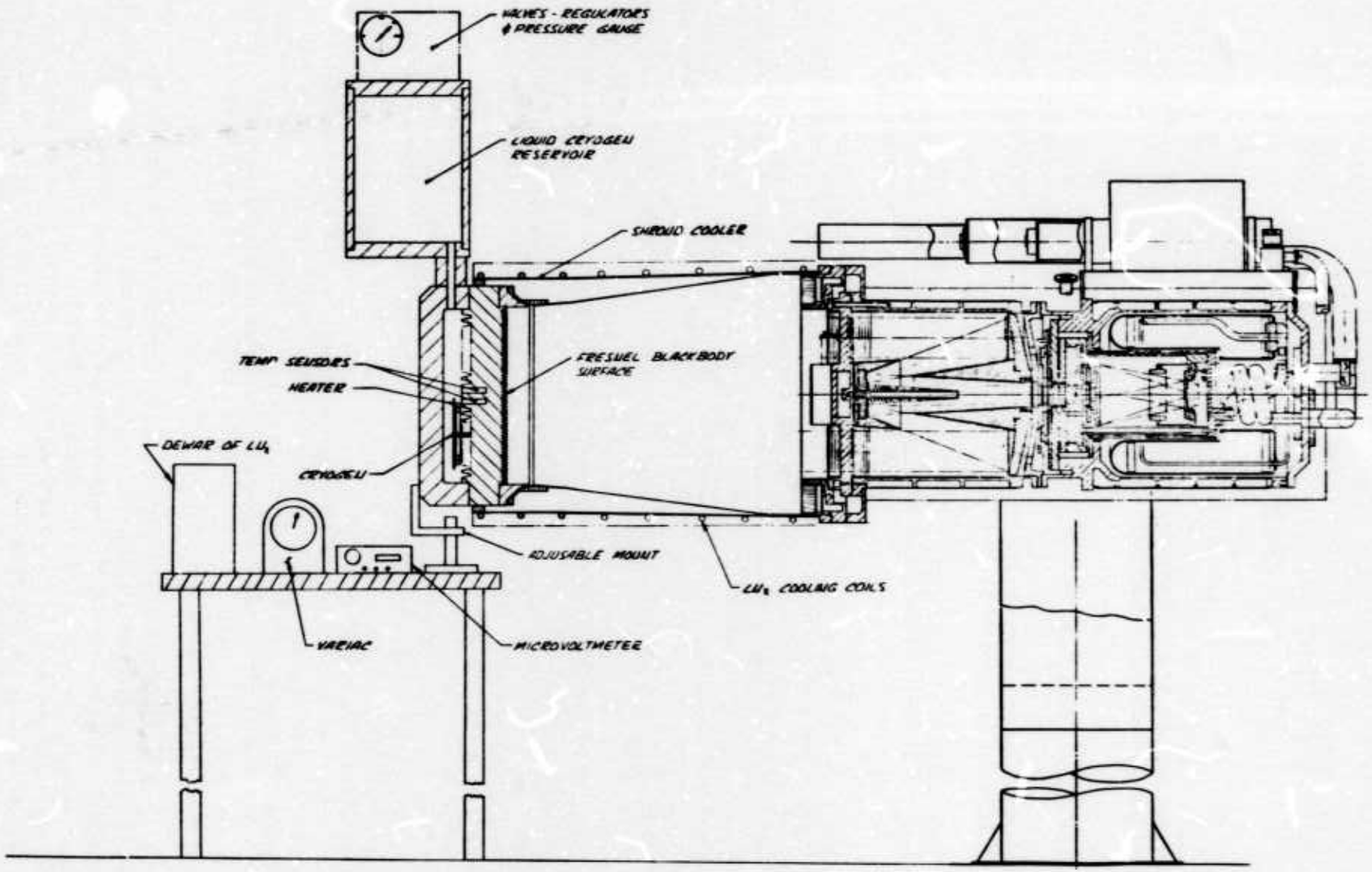

Figure 2-1. Radiometric Calibration Set-Up

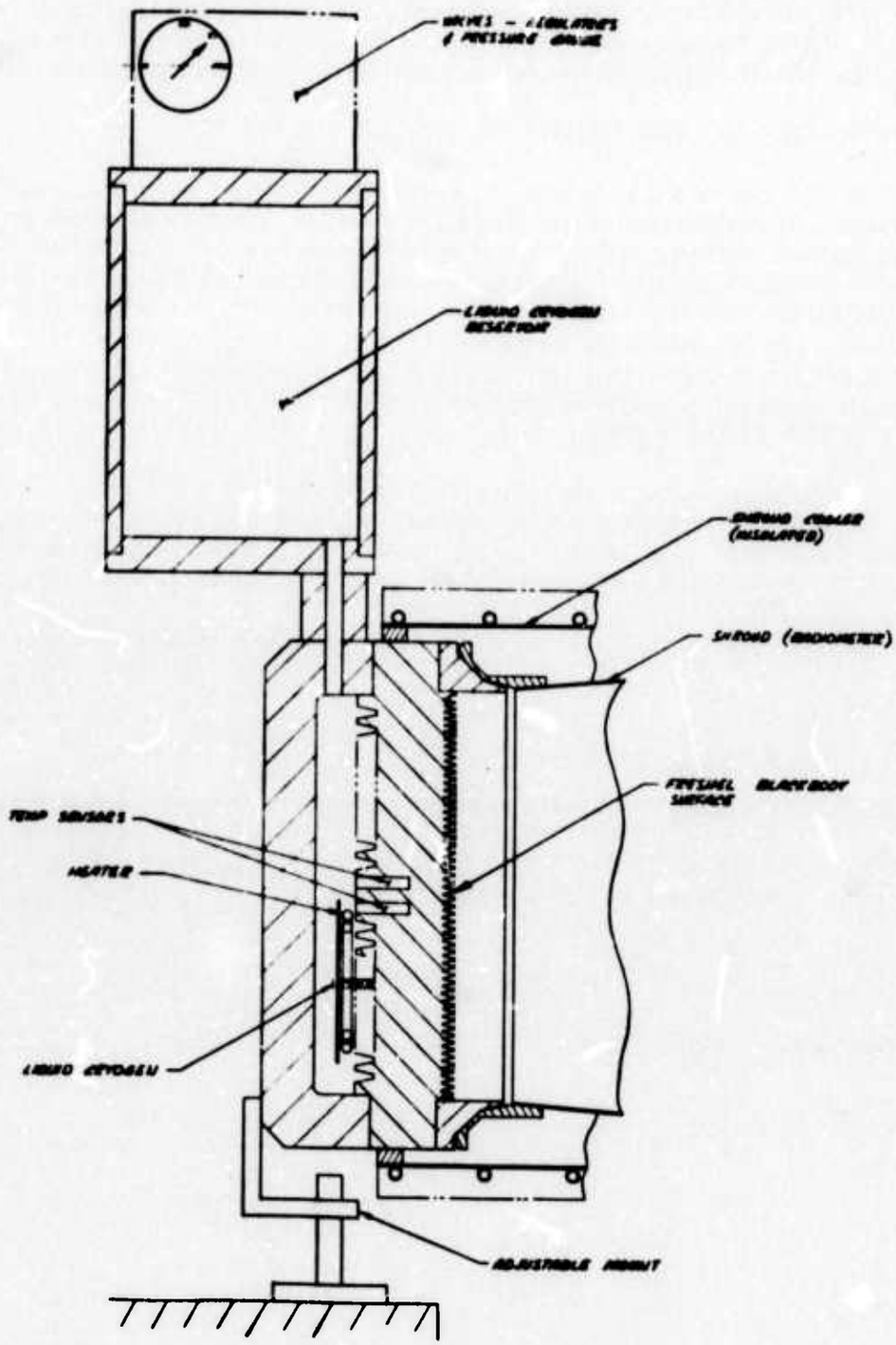

Figure 2-2. Laboratory Calibrator

The shroud cooler consists of a cylinder which fits around the antifrost shroud and attaches to the radiometer and the laboratory calibrator. A coil of 1/2-in. aluminum tubing is welded around this cylinder. Liquid nitrogen flowing through the tubing maintains the shroud cooler at 77 K, and the shroud itself is then cooled by convection and radiation until it reaches an equilibrium temperature near 77 K.

2.1 RADIOMETRIC CALIBRATION

The AFCRL personnel determined the range of radiance over which calibration was desired and then prepared a list of temperatures at which these radiances would be emitted by the blackbody calibrator. Thermocouple EMF's (using a liquid nitrogen reference) were then tabulated for the listed temperatures. A digital microvoltmeter which displayed the thermocouple EMF was used as an indicator as the temperature and the radiance of the blackbody was set at each of the required steps. By manipulating the pressure of the gaseous nitrogen over the liquid nitrogen in the calibrator, and the electrical input to the 1000 watt heater in the calibrator the temperature could usually be held to 1/3 deg.

At each radiance step (temperature) the output of each detector through each amplifier and with a representative selection of gain steps and filter combinations was recorded. System noise was recorded from a true RMS voltmeter at the point where the radiance of the blackbody equaled the radiance of the chopper.

For the calibration, AFCRL requested that the filters be installed as follows:

Position	
1	- Open, No Filter
2	- Blanked Out - Metal Disc
3	- N.D. 2 - 1% Transmission
4	- Open. Same as Position 1
5	- N.D. 3 - .1% Transmission
6	- N.D. 1 - 10% Transmission

In the spectral filter wheel:

Position	Filter No.	Wavelength
1	1A	9.0 - 10.45 μ
2	2A	10.43 - 11.40 μ
3	[illegible]	11.36 - 12.40 μ
4	[illegible]	10.43 - 12.56 μ
5	5A	14.08 - 15.92 μ
6	6A	18.3 - 22.7 μ

2.2 FOCUS AND FIELD OF VIEW

Figure 2-3 illustrates the arrangement which was used in the laboratory to both focus the instrument at its operating temperature and to map the field of view of each detector.

The instrument is set on its gimbals in the laboratory, its antifrost shroud is in place and a 0.005 mm. mylar membrane is installed to cover the aperture of the antifrost device. A 16 in. diameter, long focal length off-axis collimating mirror in a delicately adjustable mount is set up to send a collimated beam of infrared radiation into the instrument. A small plane mirror is attached to the back of the collimator so that it moves in angle with the collimator as the collimator is adjusted. A Wild theodolite is used as an angle-measuring autocollimator to accurately measure the small angular displacements of the collimating mirror.

To prepare the set up for use, a flat is placed in front of the collimator to intercept the beam leaving it and to reflect it back through the system to form an image on the diaphragm containing the pin hole. The collimator is focused by moving the blackbody and its pin hole back and forth by means of the slide mechanism until the pin hole is sharply imaged on the diaphragm, and adjacent to the pin hole. The indicator of the slide mechanism was set to zero for the focus position. The collimating flat was then removed and the collimator beam allowed to enter the radiometer aperture.

Starting with a large pin hole the instrument and the collimator were aligned by searching for and then maximizing the signal on one of the detectors, as the collimating mirror and the instrument were both moved. The signal on the detector was observed by wiring the output of the Detector Test Box (p. 7-88 R&D Information Report) into the lockin amplifier which was synchronized with the frequency pickoff on the blackbody chopper.

Using one of the small detectors, plots of detector output versus collimator mirror angle were made for positions of the blackbody pinhole at the zero position and on both sides of the zero position. The position of the pinhole which produced the sharpest and the highest peak reading indicated that the instrument was in focus for the radiation beam emerging from the collimator.

The focus of the radiometer is brought to its desired position by changing the thickness of the spacer between the secondary mirror and its support. It was found necessary to increase the thickness of the spacer by 0.012 in. in order to bring the instrument to its best focus. A new spacer lapped to parallelism and of the required thickness was used rather than a stack up of shims to minimize the disturbance to the alignment of the secondary and to maximize its thermal contact with the liquid nitrogen chamber in its support.

After the new spacer was installed, the focus was rechecked and the secondary was found to be within 0.0005 in. of the optimum position.

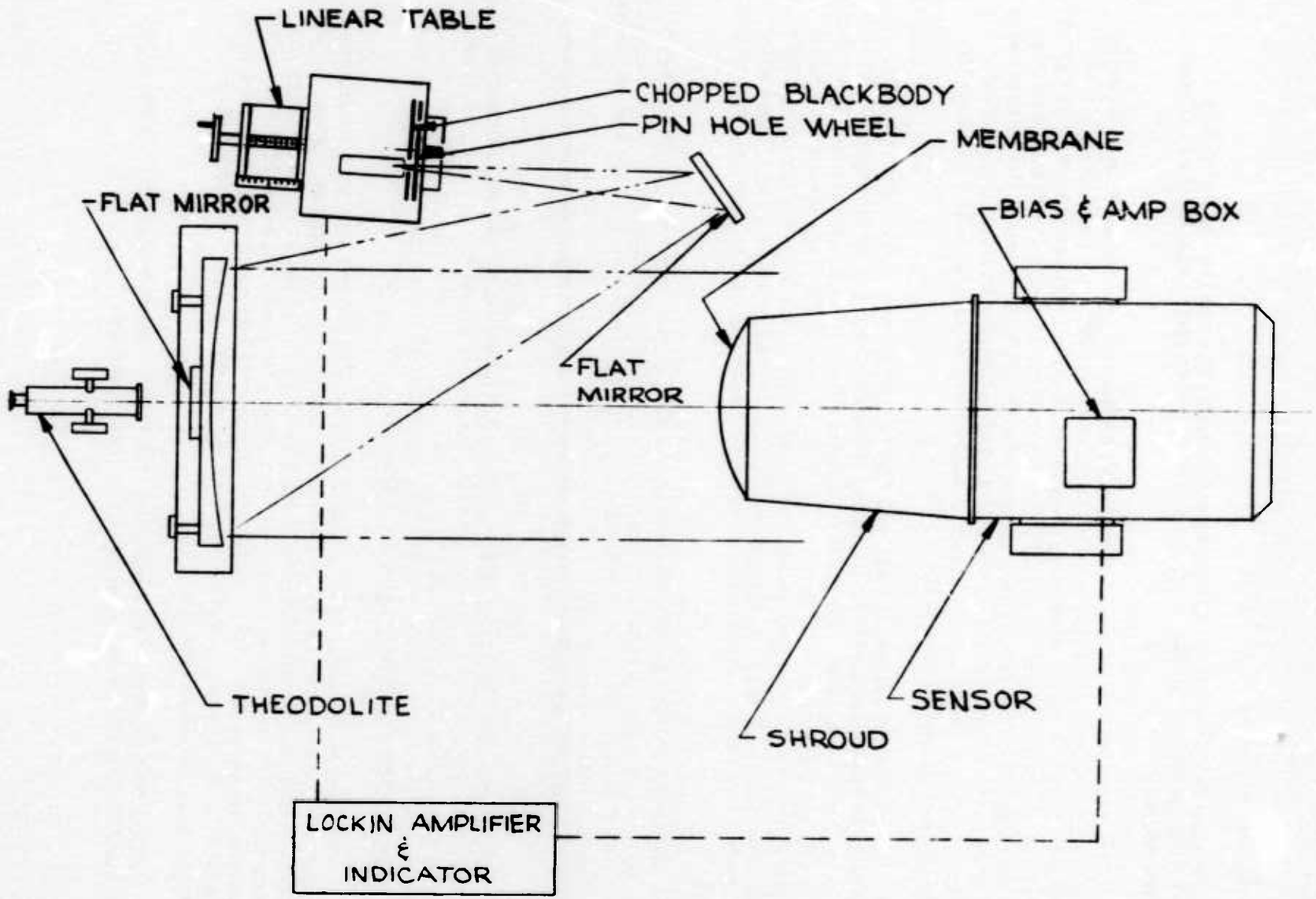

Figure 2-3. Focus and Field of View Arrangement

2.3 MAPPING THE FIELD OF VIEW

With the instrument adjusted to its infinity focus, the same laboratory set up was used to map the field of view of several of the detectors. This was done by making a plot of the signal strength versus the angle of the collimated beam as the collimated beam was displaced in angle by means of the fine adjustment in its mount. The plots were made in both azimuth and elevation angles for the selected detectors.

3. INSTALLATION ON GONDOLA

The various components of the balloon borne radiometer system were arranged on the gondola platform so that the gimbal and the rotating radiometer were close to the center of gravity of the system. Wherever possible the heavier components were placed outboard to increase the moment of inertia of the package. The dewars which would become lighter with time as the liquid nitrogen was expended were placed so that insofaras possible the weight loss around the center of gravity would be balanced.

Figure 3-1 shows the locations of most of the assemblies on the platform. In this view the protective cover has been removed from the instrument and the instrument has been gimballed away from it. Figure 3-2 shows the heat exchangers, the programmer and an LN_2 dewar which cannot be seen in Figure 3-1. Figure 3-3 is another view of the platform. Protective membranes cover the normally open aperture.

In order for the gimballing radiometer to clear the liquid nitrogen containers and their associated piping the gimbal (and the cover pedestal) were raised 2 in. above the gondola floor by spacers.

The components were attached to the gondola floor by combinations of bolts, straps and special mounting fixtures. The electrical interconnections were provided by a custom made interconnecting cable set. After the system components were mounted the GN_2 antifrost lines and the LN_2 sensor cooling lines were shaped, installed, and insulated. A flexible vacuum jacketed liquid nitrogen line was installed to supply the sensor with cryogen. A special flexible silicone rubber line was installed to deliver the ambient temperature antifrost nitrogen to the shroud. After the installation was completed, the liquid nitrogen containers were filled, and the system was cooled down. The antifrost flow rates were set up. Clearances between the gimballed radiometer and the various components were checked and the operation of the cover was demonstrated. During the course of this demonstration it was found desirable to improve the cover-gimbal interlock logic by the addition of a switch which would deactivate the gimbals just before the cover was completely seated. Upon the completion of these checks the system was disassembled as required, packaged and shipped to Holloman Air Force Base, New Mexico.

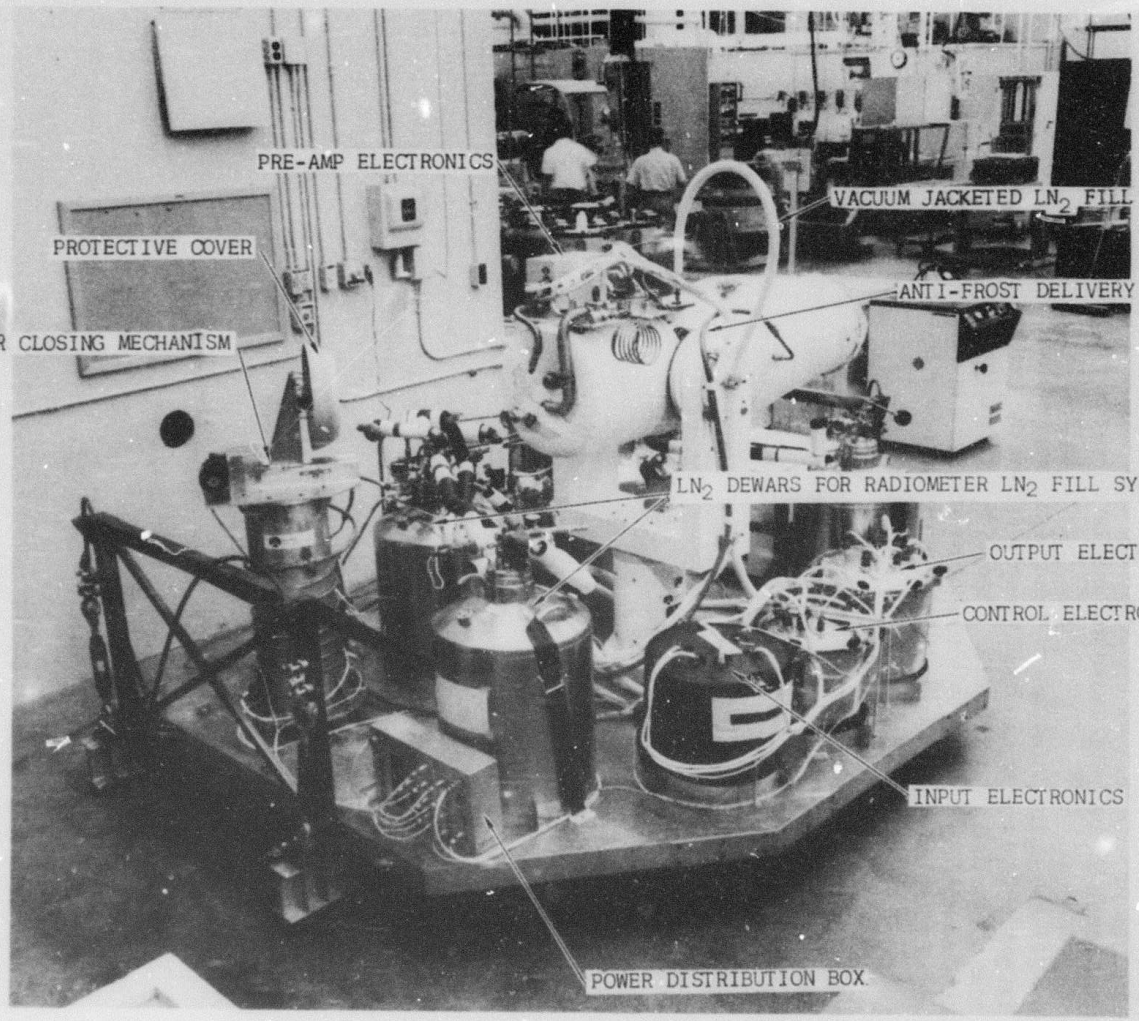

Figure 3-1. View of Gondola

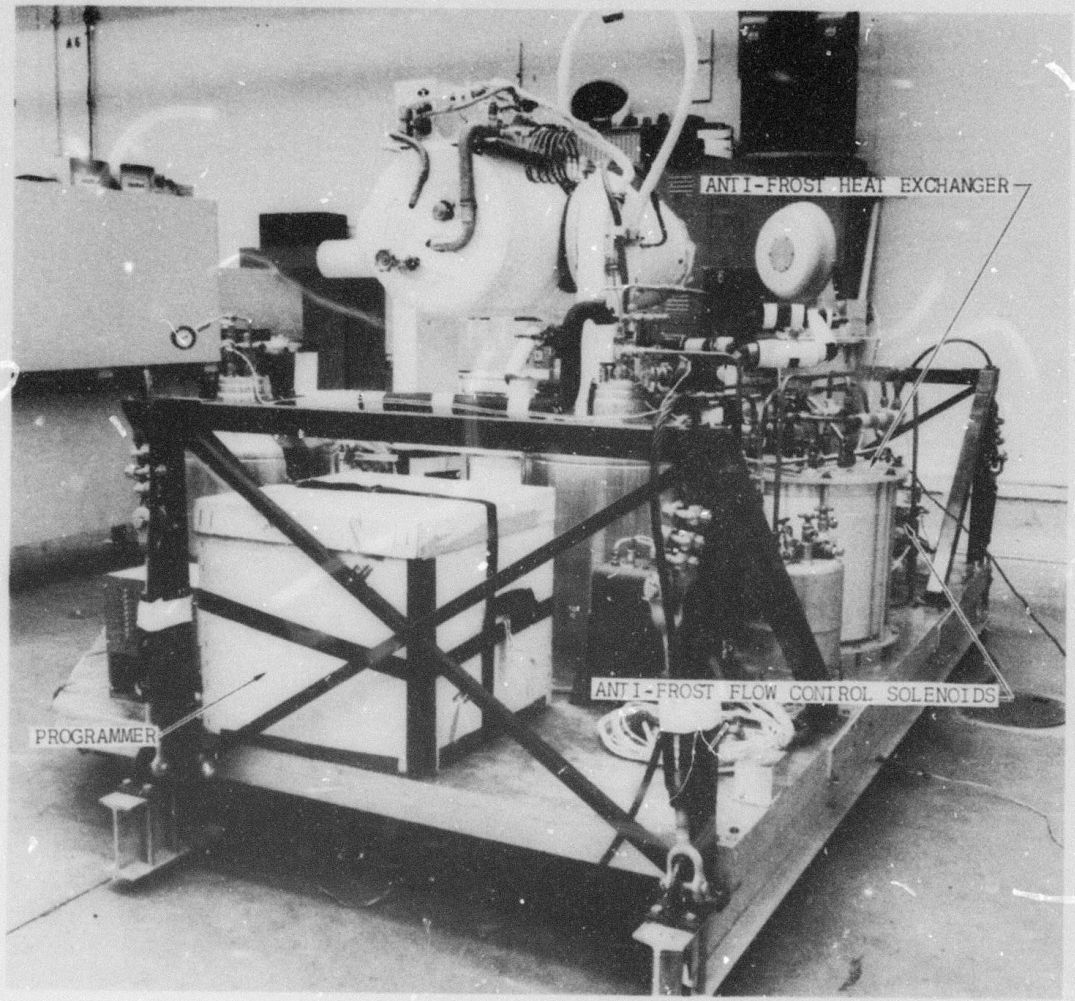

Figure 3-2. View of Gondola

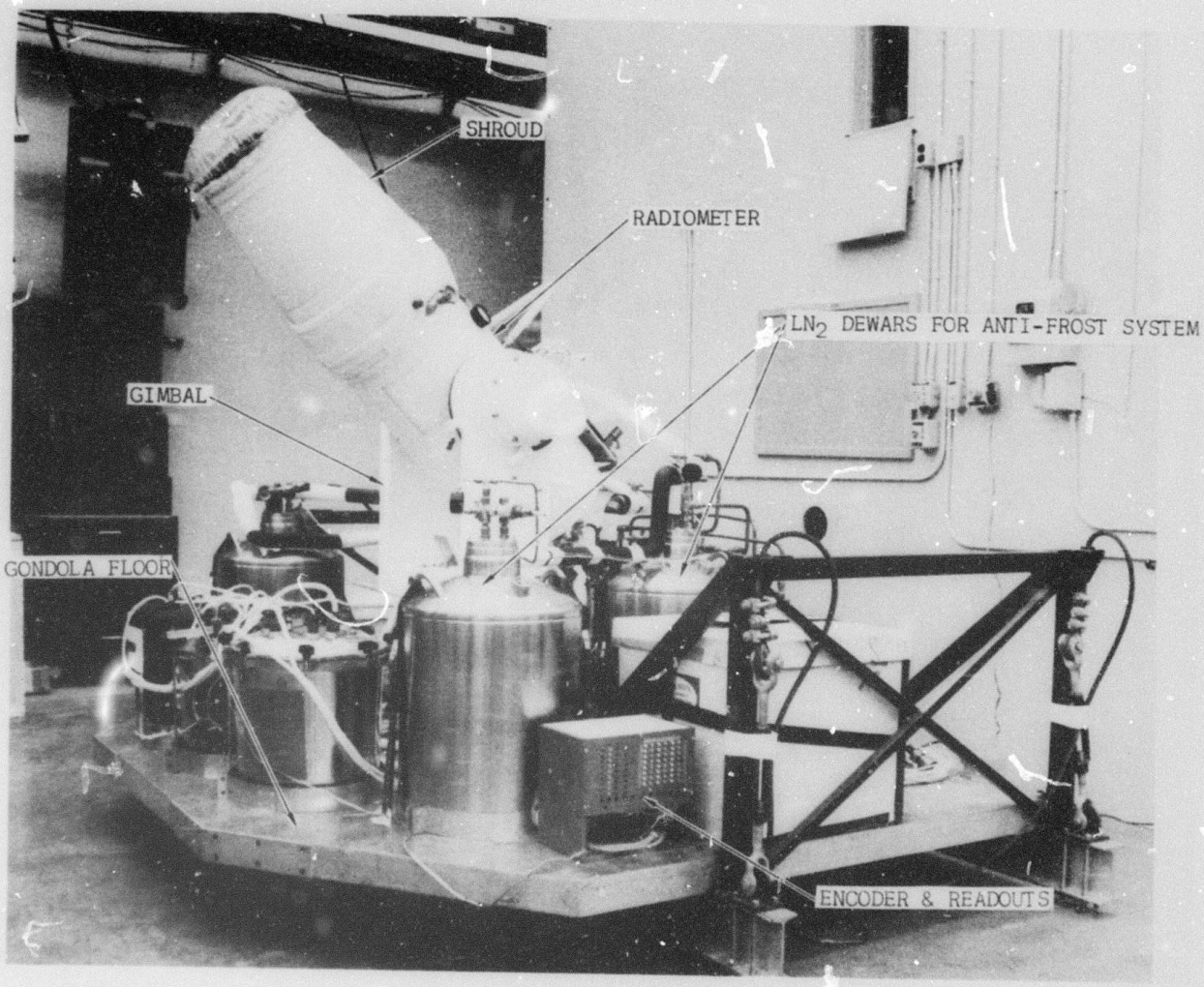

Figure 3-3. View of Gondola

4. FLIGHT NO. 1

After the system arrived at Holloman Air Force Base it was reassembled and replumbed in preparation for the upcoming flight. A complete check was made of all instrument systems. A warm gaseous nitrogen purge was circulated through the radiometer's cooling jackets and the telescope cavity while the instrument was set up against the laboratory calibrator (see Figure 2-1). The bias batteries and the batteries which power the bias feedback amplifier were replaced in preparation for the recalibration and the flight. The instrument was dried out this way for 48 hours, then it underwent a liquid nitrogen cool down.

The liquid helium tank was filled and liquid nitrogen was flowed through the heat exchanger coils of the shroud cooler. The laboratory calibrator was filled with liquid nitrogen. An abbreviated radiometric calibration was performed with satisfactory results. At the end of the calibration the instrument was warmed up, dried out and mated with the flight cover. It was left with a flow of warm dry nitrogen gas through it while final preparations were made.

The cooldown for the flight was started on June 25, 1972. The helium tank was filled by 7:00 p.m. on June 27, to be ready for an anticipated 9:00 p.m. launch. The armaflex insulating covers were placed over the electronic cannisters at approximately 8:30 p.m. This was believed to be the last time that the flight package could be worked on without interferring with the launch procedure. The launch however, was delayed due to various difficulties which arose in inflating the balloon. The launch took place at 11:00 p.m.

During the long wait on the launching pad the inflight cover and its mechanism began to accumulate considerable ice. One of the two trucks which illuminated the launch operations was asked to move slightly and to aim its high powered lights directly at the flight cover mechanism. The focused heat from the lights was sufficient to melt the ice, evaporate the water and prevent further ice formation.

During the several hours that the instrument was on the launching runway signals were received through the telemetry from the detectors as they looked at the cover and from the housekeeping electronics. As the balloon package which was suspended from a mobile crane swung gently during the prelaunch wait, changes in the detectors' signals could be noted. The signal variations could be correlated with variations in the amount of infrared from the powerful lights leaking through the cover gas vent.

The launch was accomplished at 11:00 p.m. Signals from the detectors and the telemetry continued until the balloon reached an altitude of about 20,000 ft - about 20 min into the flight.

At this point a sudden drop in battery voltage was telemetered and the detector and housekeeping signals permanently dropped out. The battery voltage continued to be telemetered. Attempts were made to command a gimbal scanning program but no indication that the cover had retracted were received by telemetry. The balloon reached an altitude of close to 100,000 ft. The flight was terminated at 3:00 a.m. on June 28, and the system was parachuted to the ground just a few miles from the Holloman Air Force Base balloon operations center.

The balloon gondola was retrieved and returned to the operations center at Holloman. There was little visible physical damage.

5. FIRST REFURBISHMENT

After the flight package was recovered the radiometer was removed from the gimbals and crated. The cables and the plumbing on the gondola were tied down or otherwise secured. The gondola was then loaded aboard a truck and shipped to Autonetics' Anaheim facility in "one piece."

Upon arrival at Anaheim the package was carefully inspected and functionally tested in an attempt to discover the cause of the signal loss and the drop out of the telemetry signals. It was also inspected for mechanical damage.

A dc-to-dc power module in the control electronics cannister was found to be burned out. This commercial module supplied the 5 volts dc for many of the telemetry signals and the ±15 volts which powered the housekeeping electronics amplifiers. It also provided the power to operate the chopper control circuits. The failure of this module would then cause the chopper motor to stop and the detector signals to be lost. It was speculated that since the electronics cannisters were insulated to protect them from the low temperatures and the high heat transfer which would occur at the altitudes from 20 to 50 thousand ft, holding the package on the ground for over two hours longer than intended might have overheated the cannisters. The overheating might have caused this compact power supply to fail. An exact replacement for the burned out multiple output power supply could not be obtained except on a long delivery schedule. Three individual power modules, which were available off the shelf, were substituted for the failed power supply. The available output power was increased by a factor of two.

A wire was found whose insulation had apparently been broken and caused a short to ground through the thermostat in the circuit which supplied 28 vdc power to the bias amplifier/battery box heater. The cause of this problem could not be established, nor its time of occurrence, i.e., before or after the landing shock. The electrical insulation on the wire and thermostat were improved and replaced.

The detectors were cleaned and an inoperative cryogenic MOSFET preamplifier was replaced. The optical elements were cleaned.

The focus of the telescope was checked and found to be at approximately two miles, it was adjusted to infinity by increasing the thickness of the spacer between the secondary and its support by approximately 0.004 in.

The chopper motor was disassembled, it was found that the magnetically hard rotor had slipped axially on its arbor. It was repositioned and staked so that it could not slip again under the influence of differential expansion as it was cooled to cryogenic temperatures. The motor ball bearings were found to be somewhat worn, i.e., they had more play than when they had been originally installed. Since the motor had been run for several tests it was estimated that they had some 25 hr of operation. Since these bearings are running unlubricated (with sacrificial retainers) at cryogenic temperatures we were not very surprised at the wear.

The motor bearings and the chopper wheel bearings were replaced. The chopper assembly was reassembled, adjusted, and tested at both room temperature and at liquid nitrogen temperature and then reinstalled in the sensor housing.

Minor changes were made in the chopper operating logic electronic circuitry to make it less sensitive to temperature changes. The time delay function in the logic circuit was adjusted so that length of time required for the chopper operation to change, from the "chopper run mode" to the "chopper stop open" or "chopper stop closed mode," was extended from one minute to one and one-half minutes. This time extension was made so that it would protect the chopper during its longer coast down time at ambient temperature.

The cast on handles of the electronic pressure cannister packages were broken in the landing and could no longer be used as attachment points for the mounting fixtures. New mounting fixtures which clamped over the top of the cannisters were fabricated and installed.

To ensure proper cooling, and monitoring of the temperature of the electronic pressure cannisters pressure gauges and thermometers were installed on each one. These were in addition to the electronic temperature sensing circuits which read out through the telemetry. Temperature checks were made on the cannisters under operating conditions. It was found necessary that all the insulation be removed from the control and the output electronics packages when operating them at normal ambient conditions.

During the final preparatory period just before the flight it was noticed that there was a frost buildup on the cover mechanism. As noted earlier, this frost was removed and its reformation before launching was prevented by using the heat from the spotlights which illuminated the night launchings. Even though it was removable the frost formation was a matter of concern. Three things were done during the refurbishment to allay this concern. The first of these was to alternately cool the cover mechanism (in the area which had frosted) with liquid nitrogen and spray it with water until a layer of hard ice had formed on it. The cover mechanism was found to be powerful enough to break through the ice and open the cover. The second action was to provide a vent in the shroud so that the cold purge gas would not be directed on the cover mechanism. The third action was to modify the flight procedure to protect the cover mechanism from atmospheric moisture by means of plastic sheeting.

The batteries which establish the detector bias and those which power the bias feedback amplifiers were replaced.

At the request of the Air Force Project Engineer the following was accomplished during the refurbishment period. The neutral density filters were changed to be in conformance with the following listings:

Position	Filter
1	- Open No Filter
2	- N. D. 2 - 1% Transmission
3	- Blocked-Blackened Metal Disc
4	- Open
5	- N. D. 2 - 1% Transmission
6	- Blocked-Blackened Metal Disc

The filter wheel mechanism was checked warm and then at cryogenic temperature.

In order to use the cover as an approximate full field in-flight calibrator its surface was anodized and sandblasted and a temperature sensor with a telemetry read-out was installed on it. Its exposed surface was insulated to help maintain a low and uniform temperature. Additional temperature sensors and temperature reporting circuits were provided for the control electronics cannister, the output electronics cannister, and the programmer. A broken connector was repaired on the power distribution box.

After all the refurbishment was completed the system was reinstalled on the balloon gondola. The system was then operationally checked first warm and again when filled with cryogens.

It was shipped completely assembled to Holloman Air Force Base on September 25, 1972.

6. FIRST ALTITUDE CHAMBER TEST

The almost completely assembled balloon radiometer system arrived at Holloman Air Force Base in good condition on October 2, 1972 after being a week in transit.

After adjustments to the telemetry encoder were completed, the completely assembled flight package was fitted into the Holloman AFB altitude chamber with approximately two inches to spare in length and width. The altitude chamber was programmed to provide a time/altitude/temperature profile similar to that which would be encountered in flight. Noise was observed in several circuits of the radiometer system when the simulated altitude reached 100,000 ft.

The system was brought "back to earth" and the possible sources of noise were being investigated when a Holloman AFB 28-volt power supply (which simulated the balloon system's battery) developed an excessively high voltage (55 volts). The power to run the chopper could no longer be obtained from the 400-cycle inverter. Numerous other problems were evident in much of the electronic circuitry. The system appeared to have suffered more damage than could be repaired in the field so the system was shipped back to Anaheim.

Each of the 26 power modules in the system was put through a test procedure and the results of these tests communicated to the manufacturers of the power modules. No statement to the effect that any of the power modules had their reliability uncompromised by the high voltage exposure could be obtained from any of the three manufacturers. Twenty-six power modules were ordered with promised delivery dates from November 10 through December 21, 1972. These dates were subsequently revised twice by the manufacturers to reflect a shipment on January 12, 1973.

A special weldment to stiffen the alignment between the gimbal and the cover pedestal was designed and fabricated at the request of the Air Force. It was installed on the gondola platform.

The last of the replacement power supplies were received during the first week in February 1973. These components were then installed and the system was readjusted to accommodate them. The complete system was then satisfactorily checked warm and then liquid nitrogen and liquid helium cooldowns were performed. All functions of the instruments were checked and it was found to perform satisfactorily. The instrument was shipped to Holloman Air Force Base on February 23, 1973. It arrived at Holloman in good condition on February 27, 1973.

7. SECOND AND THIRD ALTITUDE CHAMBER TESTS

The balloon gondola with the instrument mounted on it was placed in the Holloman AFB Stratosphere Environmental Chamber on February 28, 1973. A generally satisfactory environmental chamber test was performed on March 7. The test did, however, point up some minor difficulties in the cover closing mechanism and the input electronics canister temperature telemetry readout. These discrepancies were corrected and another environmental chamber test on March 14 confirmed that all parts of the system were performing satisfactorily.

The radiometer was removed from the environmental chamber, warmed, dried and recooled and a calibration was performed against the laboratory blackbody.

8. SECOND BALLOON FLIGHT

The radiometer was made ready (in a manner similar to that described for the first flight) for its scheduled balloon flight on March 27. The flight was cancelled because of high winds. Combinations of the lack of telemetry support because of higher priority programs and high winds prevented the launch of the radiometer until 12:30 a.m., April 6. Samples of the telemetered signals which were observed on strip chart recorders during the flight indicated that useful data were being obtained. No further information regarding the data has yet been received from the Air Force.

The balloon borne package made a hard landing due to parachute panels being blown out. However, the wind was mild and the impact site was flat, hence little damage was done to the instrument on landing.

9. SECOND REFURBISHMENT

The complete instrument and gondola platform was delivered to Anaheim in "one piece." Upon inspection it was found that no significant damage except to a gimbal bearing retaining ring had been caused in landing. The bearing retainer was replaced, the instrument was cleaned, the chopper and chopper motor bearings were replaced. Electrical contacts were reburnished and other steps were taken to reduce the system noise, particularly by improving the grounding of subsystems. The electronics were rebalanced and the gain adjusted for optimum system performance. The cover operating mechanism was completely disassembled, cleaned and relubricated. Its gear motor was disassembled, cleaned, gear clearances checked and relubricated with low temperature silicone lubricant.

The system was completely checked warm, then checked and calibrated under cryogenic conditions. The instrument was shipped to Holloman Air Force Base in one piece, except for the sensor which was packed separately. The instrument was shipped as the sole cargo of a truck on May 18 and was scheduled to arrive at Holloman at the start of business on May 22. It did not arrive until the close of business on May 24, 1973.

10. THIRD BALLOON FLIGHT

As soon as the instrument arrived at Holloman Air Force Base, the sensor head was mounted in the gimbals. A flow of warm (150 F) dry nitrogen was then directed through the liquid nitrogen and the telescope cavities to remove any adsorbed moisture. The instrument was checked warm while the purge was being accomplished. It was then cooled with liquid nitrogen and then the helium tank was filled and a semi-calibration was performed against the cold cover as a background.

An attempt was made to fly the scheduled mission on the evening of May 30. The mission had to be cancelled at 22:30 after the launch crew and the equipment had been deployed on the runway for approximately four hours waiting for a launch window in the wind and cloud patterns. Another flight attempt was made and cancelled on the night of June 1st. Because the instrument had been cold for so long (since the semi-calibration on May 28) it was put on a warm purge the night of June 1 after the flight was cancelled. This was done so that ice which had been accumulating on various surfaces could be melted and evaporated. A cooldown of the instrument was started again the afternoon of June 3, and the instrument prepared for a rescheduled flight on June 4.

What appears to be a completely successful flight was made starting at 21:50 June 4 and terminating at 07:30 June 5. System housekeeping measurements were made throughout this period. Radiometric measurements were started at 23:40 when the system reached float at approximately 92,000 ft and continued until 06:30 June 5 when the radiometer was stowed and covered to prevent it from being damaged by looking at the sun. A few channels of the data were viewed in real time on a pen recorder. They indicated that good data were being telemetered and received. No further information relative to the data has been received from the Air Force at this time (June 29, 1973). The instrument landed on a road in the White Sands Range. It appears to have suffered little damage.

11. FLIGHT PREPARATION INSTRUCTIONS

The flight preparation instructions which form Section 11 of the Balloon Borne Cryogenically Cooled Filter Radiometer Research and Development Information Report No. C72-132/401 has been rewritten here and revised where applicable to reflect the knowledge gained in field experience with the instrument.

11.1 PRE-COOLDOWN CHECKLIST

1. If onboard programmer is not capable of permitting independent operation of each subsystem and readout of each housekeeping signal, replace it with telemetry test box.

2. Connect main 28 vdc busses to GSE power supply.

3. Turn on 28 vdc power.

4. Remove as much insulation as necessary from electronics cannisters to maintain their operating temperatures within their prescribed operating ranges - this is confirmed by monitoring the cycling of the heater thermostats or by monitoring the cannister temperatures by some other means.

5. Connect detector test box to detector output connector (J5018) using cable which normally carries signals from this connector to detector bias electronics box.

6. Connect high-impedance voltmeter to output of detector test box.

7. Set bias voltage switch on test box at 7.5 vdc; conform that output of test box is greater than 5 vdc; change "FET Test" switch to other position; confirm that output voltage of test box changes; repeat for remaining eight channels.

8. Close "Cover Open" command switch; verify proper opening of inflight cover and proper position readout voltages.

9. Verify turn-on of gimbal power when cover reaches open position.

10. Command gimbal to move in azimuth and confirm proper operation of position readout and stow indicators.

11. Verify loss of inflight cover power when gimbal leaves stow position.

12. Return gimbal to stow position and confirm proper operation of stow indicator.

13. Repeat Steps 10 through 12 with elevation axis.

14. Open "Cover Open" command switch and close "Cover Close" command switch; confirm proper closing of cover and proper position readout voltages; open "Cover Close" command switch.

15. Close "VBS Shutter Open" command switch; confirm proper level of "VBS Shutter Position" readout voltage. DO NOT LEAVE THIS SWITCH CLOSED FOR MORE THAN 1 OR 2 SECONDS.

16. Close "VBS Shutter Close" command switch; confirm proper level of "VBS Shutter Position" readout voltage. DO NOT LEAVE THIS SWITCH CLOSED FOR MORE THAN 1 OR 2 SECONDS.

17. Close "Chopper Wheel Run" command switch and confirm proper change of "Chopper Wheel Mode" readout voltage.

18. Open "Chopper Wheel Run" command switch; after one minute delay, close "Chopper Wheel Stop Open" command switch; confirm proper change in "Chopper Wheel Stop Open" command switch; confirm proper change in "Chopper Wheel Mode" readout voltage, after appropriate delay.

19. Open "Chopper Wheel Stop Open" command switch and close "Chopper Wheel Stop Closed" command switch; confirm proper change in "Chopper Wheel Mode" readout voltage after appropriate delay.

20. Open "Chopper Wheel Stop Closed" command switch; confirm proper change in "Chopper Wheel Mode" readout voltage.

21. Close "Filter Wheel No. 1 Advance" command switch; confirm proper advance of filter wheel by watching position readout voltage drop to zero and then rise to proper d-c level or pulse height (depending on available monitoring equipment.

22. Repeat Step 21 at least six times, confirming that readout signal amplitudes change appropriately for each step.

23. Repeat Steps 21 and 22 for Filter Wheel No. 2

24. Check temperatures of these electronics cannisters; if any is too high remove more insulation or partially open cannister to maintain temperature below or within specified range.

25. Close "Blackbody Shutter" command switch; verify proper change in blackbody shutter position readout voltage.

26. Close "Blackbody Chopper" command switch; verify proper change in blackbody chopper mode readout voltage.

27. Close "Blackbody Power" command switch; verify proper change in "Blackbody Temperature" readout voltage.

28. Close "Blackbody Temperature Switch No. 2", verify rise and then return of "Blackbody Stability" readout voltage; verify proper change in "Blackbody Temperature" readout voltage.

29. Repeat preceding step for "Blackbody Temperature Switch No. 1" and then for "Blackbody Temperature Switch No. 2."

30. Open "Blackbody Temperature Switch No. 3"; verify fall and then return of "Blackbody Stability" readout voltage; verify proper change in "Blackbody Temperature" readout voltage.

31. Repeat preceding step for "Blackbody Temperature Switch No. 1" and then for "Blackbody Temperature Switch No. 2."

32. Open "Blackbody Power", "Blackbody Chopper", and "Blackbody Shutter" command switches, verifying proper change in each readout voltage as switch is opened.

33. Connect Electronic Calibration Signal Source Box to "Electronic Calibrate Signal Input" jack; close "Electronic Calibrate" command switch.

34. Set Electronic Calibration Signal Source Box for maximum amplitude signal; confirm that the logarithmic output for Channel No. 1 is near maximum and that the polarity indicator indicates a positive signal.

35. Reduce the calibrator signal a step at a time and verify that the logarithmic outputs fall accordingly.

36. Close first "Gain" command switch; confirm proper change in "Gain Indicator" readout voltage; open "Gain" command switch. Repeat with each remaining "Gain" command switch.

37. With the electronic calibrator signal at minimum, verify that the linear output is within range (0 to 5 vdc). Increase the electronic calibrator signal a step at a time and verify that the linear output increases accordingly. When an increase in the electronic calibrator signal drives the output signal above 5.0 volts, reduce the amplifier gain by closing the first "Gain" command switch. Each subsequent time that an increase in electronic calibrator signal drives the output signal above 5.0 vdc, open the "Gain" switch that is closed and close the next "Gain" switch. At conclusion of this test, open all "Gain" switches.

38. Repeat preceding two steps for each of the remaining eight channels.

39. Open "Electronic Calibrate" command switch and disconnect electronic calibration signal source box.

40. Monitor readout voltages of "VBS Temperature" and "Antifrost Gas Temperature" readouts; both should indicate ambient temperature.

41. Monitor readout voltages of five remaining "Temperature" readouts; all should indicate saturation, i.e., greater than 5.0 vdc.

11.2 GN_2 PURGE AND LN_2 FILL PROCEDURE

The sensor is to be GN_2 purged through the manual valve vent located on the front of the sensor. The automatic vent is to be closed and the vacuum jacketed LN_2 line used as a vent. (Open manual valve located on the downstream side of the LN_2 fill solenoid). The sensor is to be warm GN_2 purged at a line temperature of 150 F for 48 hours (2 days) before starting the LN_2 fill.

Attach LN_2 fill line to fill port. (Located on upstream side of the LN_2 fill solenoid.) Electrically connect the LN_2 fill solenoid and the sensor vent solenoid simultaneous with starting LN_2 fill. After filling has started, shut off GN_2 purge flow and proceed with fill until the automatic fill and vent system operates properly. (Prior to system operating properly it will be necessary to open and close the manual valve vent on the sensor several times to regulate the fill.) To speed up initial fill and cooldown, another LN_2 fill line may be attached to the manual valve located on rear of sensor. Caution must be exercised NOT to exceed a pressure of 25 psi in sensor.

When system has cold soaked (approximately 24 hours minimum) fill with LHe. Prior to moving gondola to launch site start the onboard LN_2 fill system by opening the manual valve located in fill line. Shut off the external LN_2 fill. It may be necessary to open and close the manual vent valve (on sensor) in order to maintain a full sensor before the onboard system cycles properly.

11.3 NITROGEN COOLDOWN CHECKLIST

Turn system power OFF at distribution box.

1. Disconnect power leads to automatic LN_2 fill vent solenoid (P019).
2. Connect supply of warm dry gaseous nitrogen to manual fill vent valve.
3. Disconnect anti-frost gas transfer line from anti-frost control valve assembly.
4. Purge radiometer with flow of nitrogen; maintain highest purge gas flow rate consistent with available gas supply without letting radiometer jacket internal pressure exceed 20 psig. (See GN_2 purge procedure.)
5. After anti-frost line has been purged of moist air, plug end of line to prevent moist air from entering line. (4-8 hours) run anti-frost gas flow while connecting to valve output.
6. Connect leak detector to vacuum space. Open valve on evacuation line fitting on equipment floor. Evacuate vacuum space.
7. Close operator valve; disconnect evacuation line from leak detector.
8. Connect leak detector to helium vent fitting on equipment floor; evacuate helium tank. Not required if He tank remains under GHe pressure (that has not been interrupted).
9. Remove helium space pressure relief valve (PRV) from manual valve on equipment floor.
10. Connect coiled copper line to supply of gaseous helium.
11. Adjust pressure regulator on gaseous helium supply to 2 1/2 psig.
12. Begin flow of gaseous helium through line to remove moisture.
13. Immerse coil in liquid nitrogen to freeze out remaining moisture.

14. Connect other end of coil to helium space PRV fitting on equipment floor.

15. Close valve in vacuum line to isolate pumps from radiometer (see Item 14).

16. Open manual valve on helium space PRV line.

17. Remove vacuum evacuation line from helium space vent fitting (see Item 14).

18. Replace cap on helium space vent fitting (see Item 14).

19. Close manual valve on PRV line when tank is pressurized to 2 1/2 psig.

20. Helium supply may be shut off and disconnected from radiometer or left as is until helium cooldown.

21. Do not proceed further until warm gaseous purge has been flowing for at least 48 hours.

22. Connect external liquid nitrogen supply to liquid nitrogen transfer line fitting on the upstream side of LN_2 fill solenoid.

23. Pressurize liquid nitrogen supply to 25-30 psig; begin transfer of liquid nitrogen to radiometer jacket.

24. Shut off gaseous nitrogen and disconnect purge line.

25. Open manual vent valve.

26. Reconnect automatic vent solenoid power leads (P5019).

27. When liquid nitrogen level in radiometer jacket reaches the level at which it keeps the automatic vent solenoid closed, close the manual vent valve; remove extension line if one has been added.

28. Gradually reduce pressure in liquid nitrogen supply until desired radiometer jacket operating pressure is reached; if pressure is reached at which automatic vent solenoid remains open, raise pressure 2-3 psi and wait 15-30 minutes before further reduction.

29. Monitor readout voltages of "Chopper Wheel Temp", "Primary Mirror Temp", the range of 0-5.0 vdc when radiometer has been cooled by liquid nitrogen.

30. Monitor readout voltages of "Filter Temp" and "Detector Temp" readouts; confirm that both are saturated, i.e., greater than 5.0 vdc.

31. Repeat Steps 5 through 7 and 17 through 32 of "Pre-cooldown Checklist" to verify cold functioning of chopper wheel, filter assembly, inflight calibrator, and detector package.

11.4 HELIUM COOLDOWN CHECKLIST

1. If gaseous helium supply is still connected to PRV fitting on equipment floor, start with Step 6.

2. Connect copper coil to gaseous helium supply; set pressure regulator on gaseous helium supply to 2 1/2 psig.

3. Begin flow on helium through coil.

4. Immerse coil in liquid nitrogen bath.

5. Connect otherend of coil to PRV fitting on equipment floor.

6. Open manual valve on PRV line.

7. Connect liquid helium transfer to supply of liquid helium.

8. Allow gaseous helium to escape from liquid transfer line as transfer line cools. When gas begins to flow cold-line may be connected to He fill port (gas cools tank).

9. When liquid helium begins to emerge from transfer line, quickly remove cap from liquid helium fill port on rear of radiometer and plug in liquid helium transfer line.

10. Quickly remove cap from vent fitting on equipment floor.

11. Close manual valve on PRV line.

12. Disconnect gaseous helium supply from radiometer.

13. Set pressure regulator on gaseous helium supply to 16-18 ounces per square inch.

14. Connect gaseous helium supply to pressurization fitting on liquid helium supply.

15. Connect PRV to its fitting on equipment floor; OPEN MANUAL VALVE!

16. Watch for usual indication that helium tank is full; disconnect liquid helium transfer line from radiometer and quickly replace caps on liquid helium fill port and vent on equipment floor.

17. Remove liquid helium transfer line from liquid helium supply.

18. Monitor all "Temperature" readout voltages; confirm that all eight voltages are within their range, i.e., are between 0 and 5.0 vdc.

19. Repeat Steps 21 through 24 of Pre-cooldown Checklist to confirm proper operation of filter assembly. Check detectors against cold cover.

11.5 POST-COOLDOWN PREFLIGHT CHECKLIST

1. Monitor "LN_2 Supply Status" readout; confirm that it indicates full condition of LN_2 Delivery Dewar.

2. Monitor "GN_2 Supply Dewar Pressure" and "LN_2 Supply Dewar Pressure" readout voltages; both should indicate ambient pressure.

3. Fill four liquid nitrogen storage dewars (exact procedure for this step must be established when available field facilities are known).

4. "GN_2 Supply Status" readout; confirm that it indicates full condition of GN_2 Delivery Dewar.

5. Fill two heat exchangers with water.

6. Disconnect 28 vdc power from cryogen system connector (J6102).

7. Connect ground 110 vac power source to cryogen system connector (J6102).

8. Heat storage dewars with 110 vac until cycling of pressure switches occurs on all four dewars.

   NOTE: Items 3, 5, 6, 7, and 8 may be completed before He cooldown.

9. Monitor "GN_2 Supply Dewar Pressure" and "LN_2 Supply Dewar Pressure" readout voltages; both should indicate specified pressure levels.

10. Close "Dewar Purge" (LN_2 dump) command switch momentarily; confirm that LN_2 System and GN_2 System purge lines both emit gaseous nitrogen during switch closure.

11. Disconnect 110 vac power source from cryogen system connector; reconnect 28 vdc power to connector.

12. Close "Antifrost Low Flow Open" command switch momentarily; confirm that gaseous nitrogen is now flowing from antifrost system control valve assembly where antifrost gas transfer line has been disconnected; confirm that "Antifrost Flowmeter" readout indicates low flow rate. Close "Antifrost Low Close" command switch momentarily; confirm that gas emission from valve assembly has ceased and that "Antifrost Flowmeter" readout indicates no flow.

13. Repeat Step 12 for "Antifrost Medium Flow Rate" and "Antifrost High Flow Rate" command switches.

14. Disconnect telemetry test box from system and reconnect onboard programmer.

15. Replace all insulation around electronics cannister.

16. Disconnect ground 28 vdc power source and reconnect onboard batteries.

17. Turn inflight calibrator on to maximum power; check each detector for signal.

18. Top off LN_2 dewars for sensor fill system prior to launch (but as close to the launch time as possible).

12. INSTRUMENT MODIFICATIONS/DRAWING REVISIONS

During the course of the field work with the instrument it was found desirable to make modifications to the equipment to improve its operating performance. These modifications are documented in this report as revisions to the drawings which were originally included in the Balloon-Borne Cryogenically Cooled Filter Radiometer Research and Development Information Report No. C72-132/401. In this report they are designated with the usual figure notation for this report followed by a number in parenthesis which refers back to their original figure number in C72-132/401, i.e., Figure 12-14 (7-10) Schematic-Output Electronics Board 2002. An additional circuit was added to the instrument during this program. This was done in order to provide a better temperature control for the input electronics cannister than could be provided by a thermostat. This circuit is documented as Figure 12-2 Input Electronics Temperature Control Circuit.

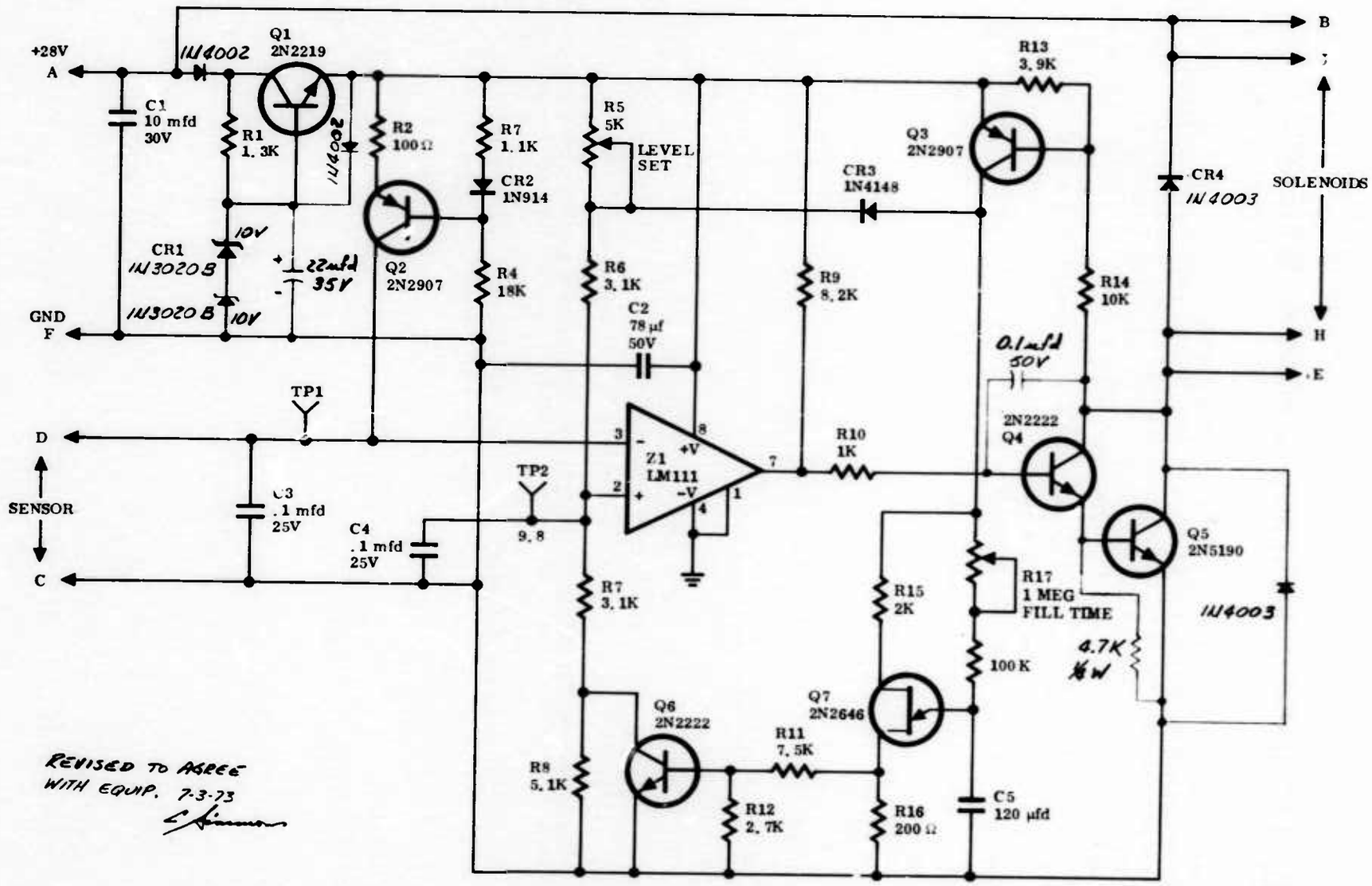

Figure 12-1. (7-24) Schematic - LN_2 Level Control Circuit

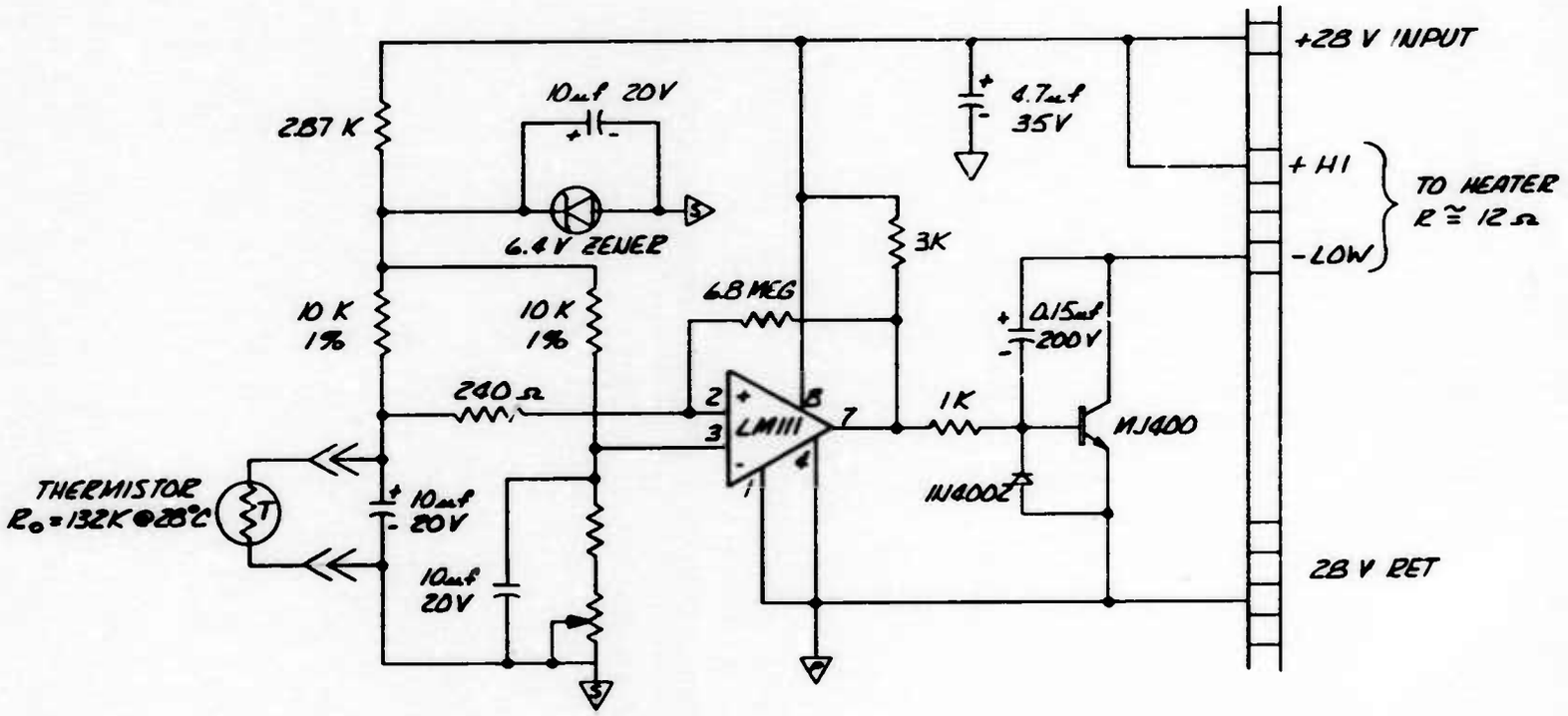

Figure 12-2. Input Electronics Temperature Control Circuit

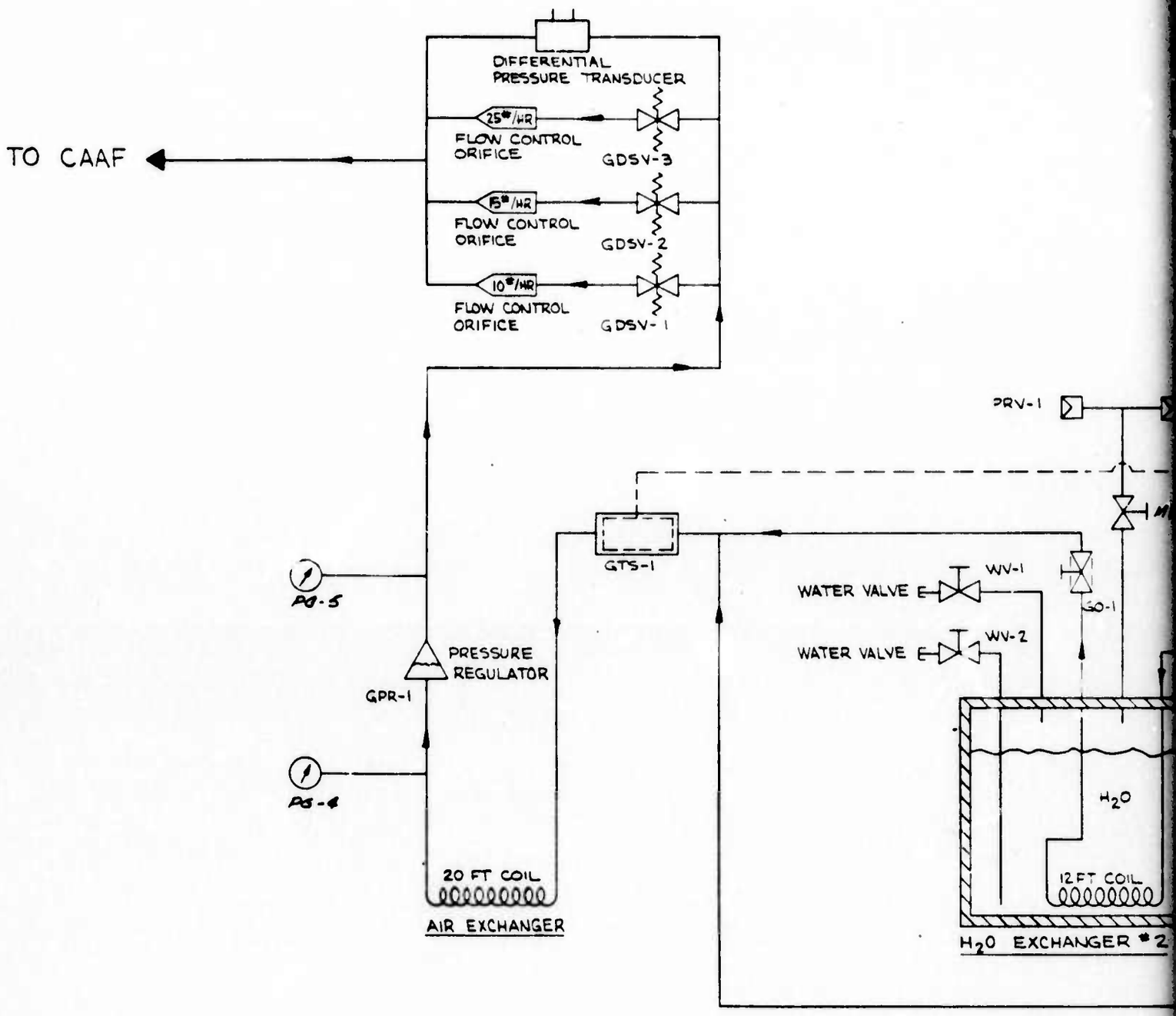
DIFFERENTIAL PRESSURE TRANSDUCER
TO CAAF
25#/HR
FLOW CONTROL ORIFICE
GDSV-3
15#/HR
FLOW CONTROL ORIFICE
GDSV-2
10#/HR
FLOW CONTROL ORIFICE
GDSV-1
PRV-1
GTS-1
WV-1
WATER VALVE
WV-2
WATER VALVE
GO-1
PG-5
PRESSURE REGULATOR
GPR-1
PG-4
20 FT COIL
AIR EXCHANGER
H_2O
12 FT COIL
H_2O EXCHANGER #2

A

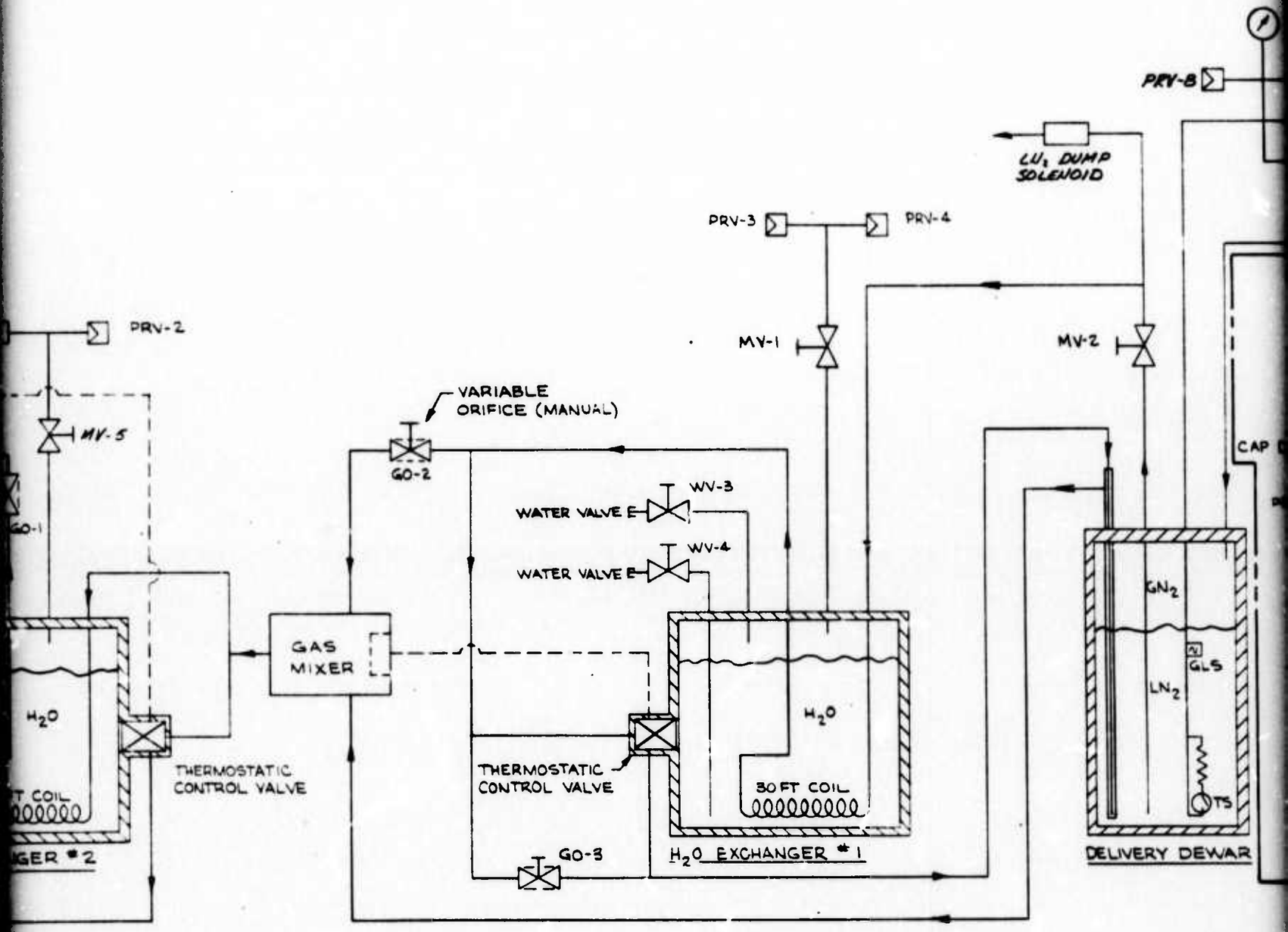
PRV-8
LU2 DUMP SOLENOID
PRV-3
PRV-4
PRV-2
MV-1
MV-2
VARIABLE ORIFICE (MANUAL)
MV-5
GO-2
CAP
WV-3
WATER VALVE
WV-4
WATER VALVE
GN2
GLS
LN2
GAS MIXER
H2O
H2O
THERMOSTATIC CONTROL VALVE
THERMOSTATIC CONTROL VALVE
30 FT COIL
TS
GO-3
H2O EXCHANGER #1
DELIVERY DEWAR

Figure

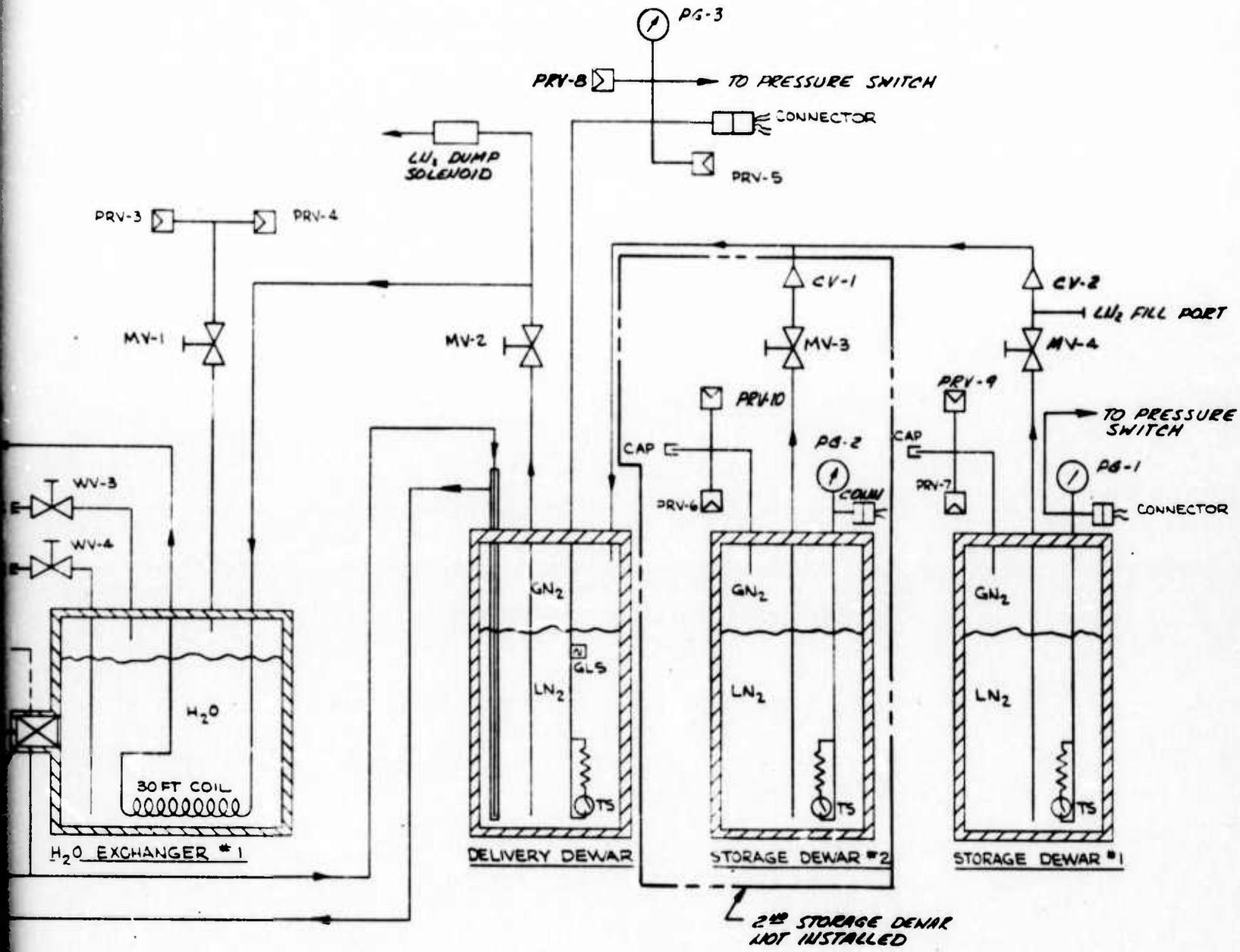

Figure 12-3. (6-2) GN_2 Generator Plumbing Schematic

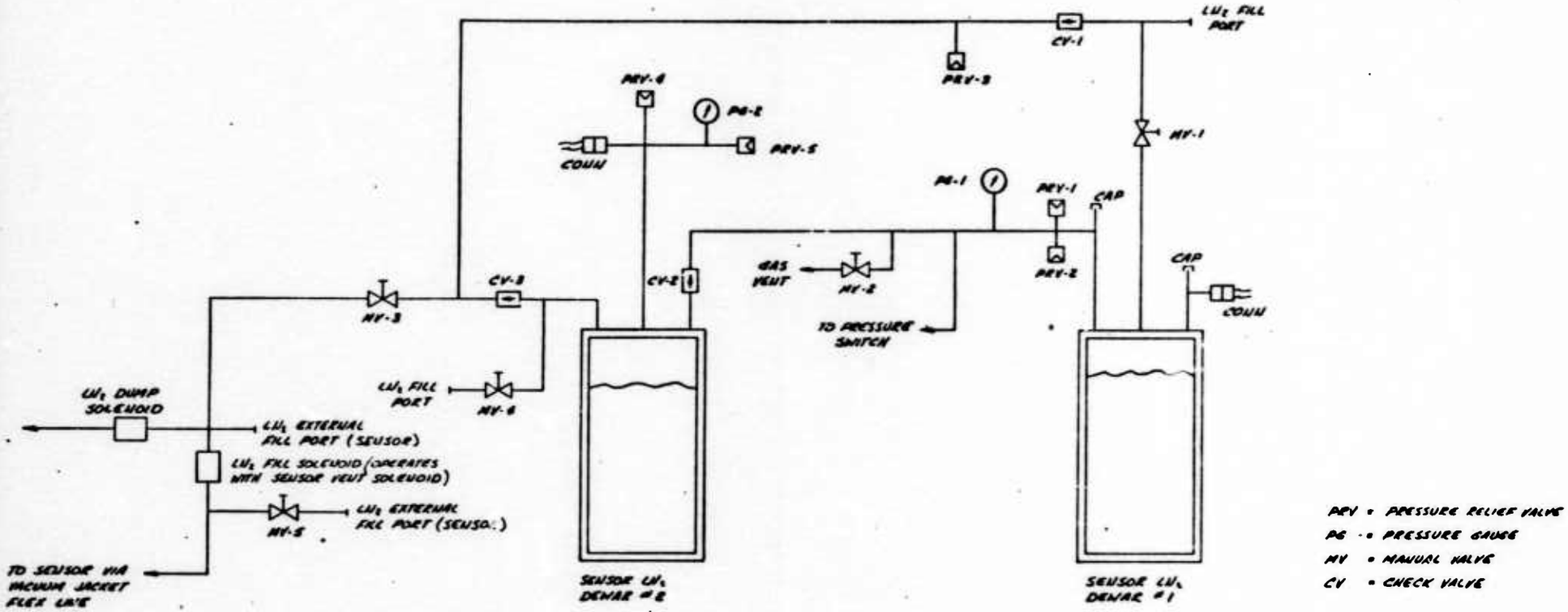

Figure 12-4. (6-3) LN_2 Supply Schematic

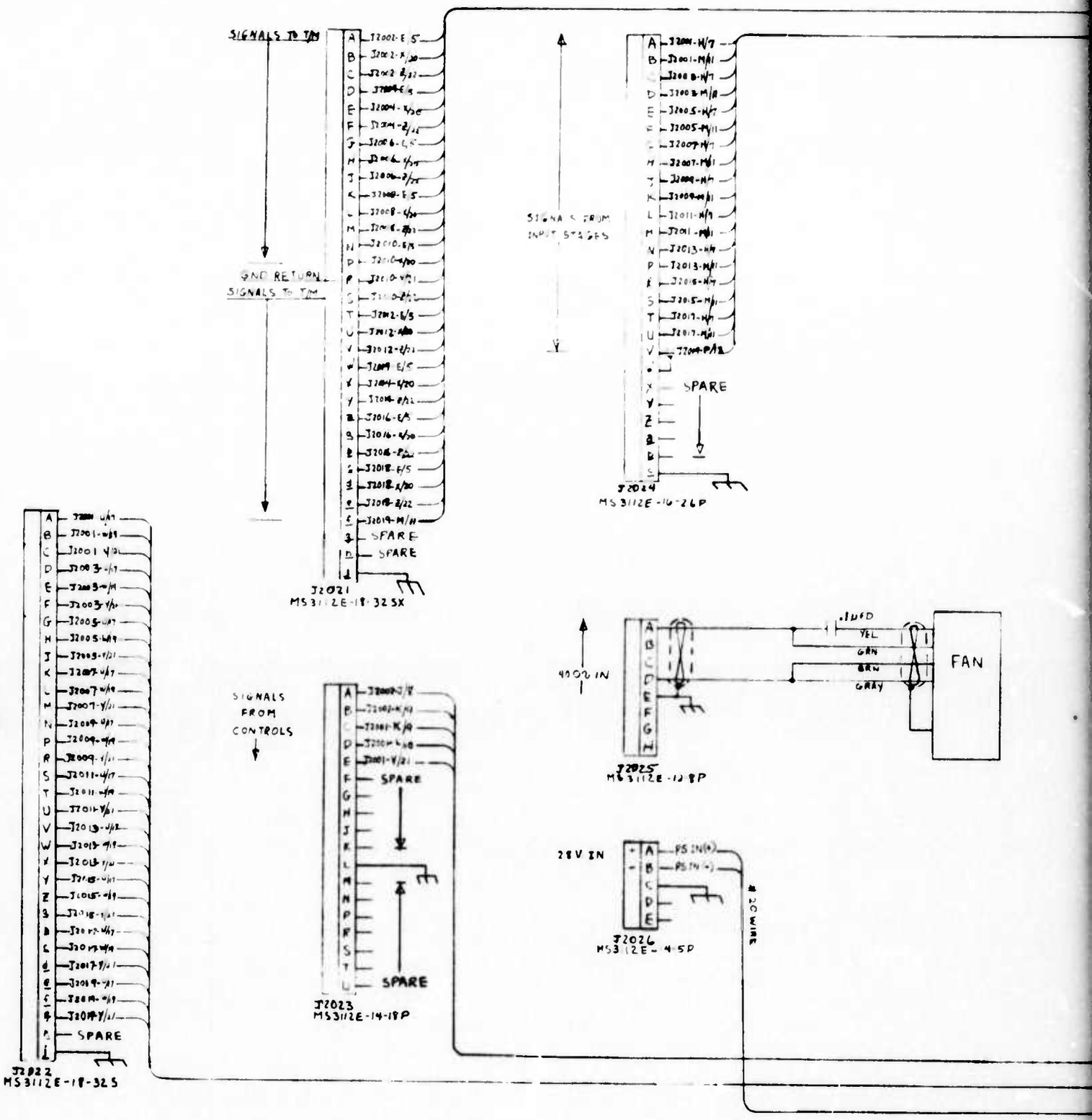
SIGNALS TO T/M
GND RETURN SIGNALS TO T/M
J2021
MS3112E-18-32SX
SIGNALS FROM INPUT STAGES
SPARE
J2024
MS3112E-16-26P
DC POWER TO INPUT STAGES
J2022
MS3112E-18-32S
SIGNALS FROM CONTROLS
SPARE
J2023
MS3112E-14-18P
400~ IN
FAN
YEL
GRN
BRN
GRAY
J2025
MS3112E-12-8P
28V IN
PS IN(+)
PS IN(-)
J2026
MS3112E-4-5P
#20 WIRE

A

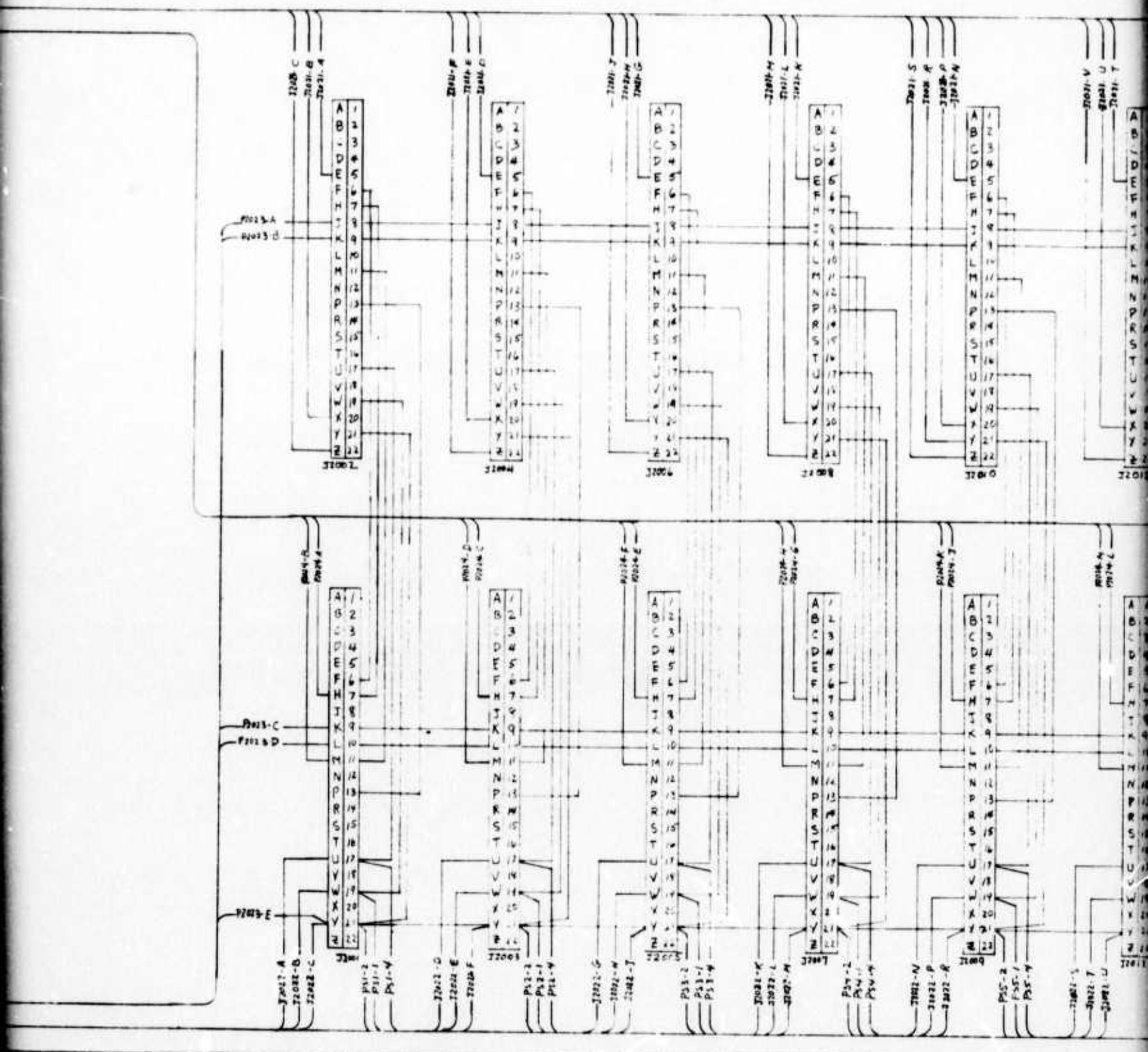

B

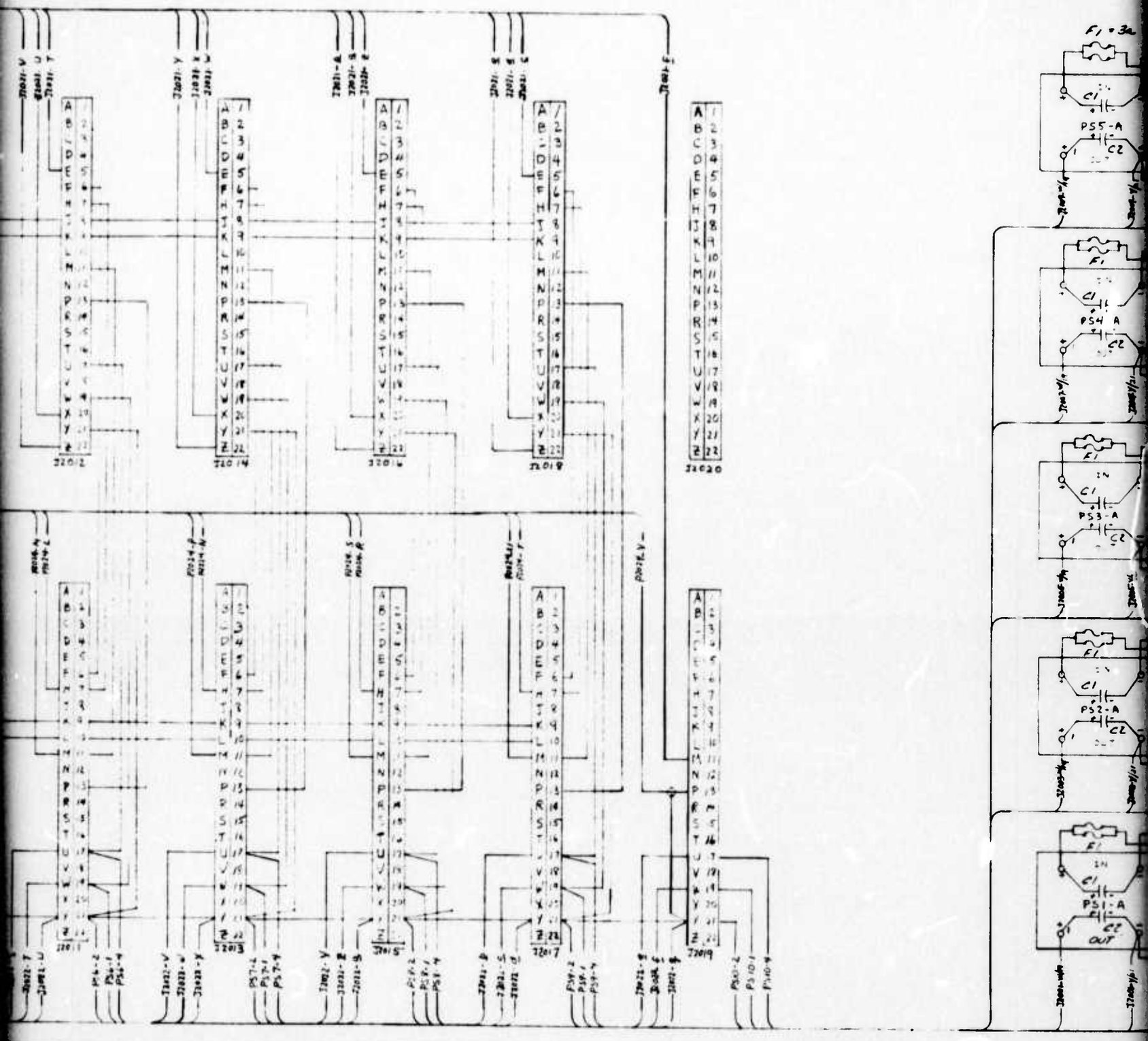
J2012
J2014
J2016
J2018
J2020
J2013
J2015
J2017
J2019
F1 = 3a
C1
C2
PS5-A
PS4 A
PS3-A
PS2-A
PS1-A
IN
OUT

Figure 12-5.

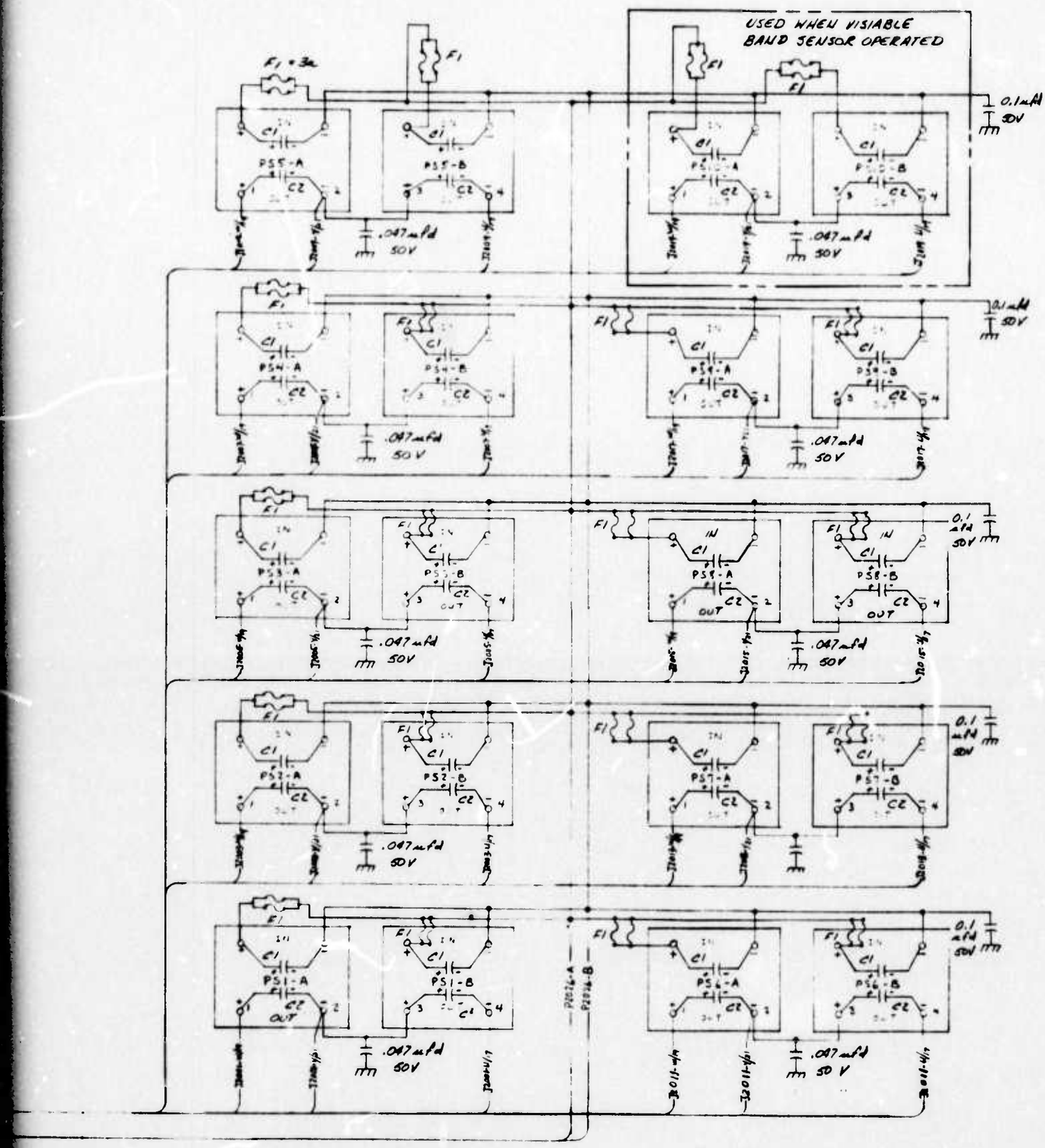

Figure 12-5. (7-8) Schematic-Output Electronics Circuit Board Interconnections

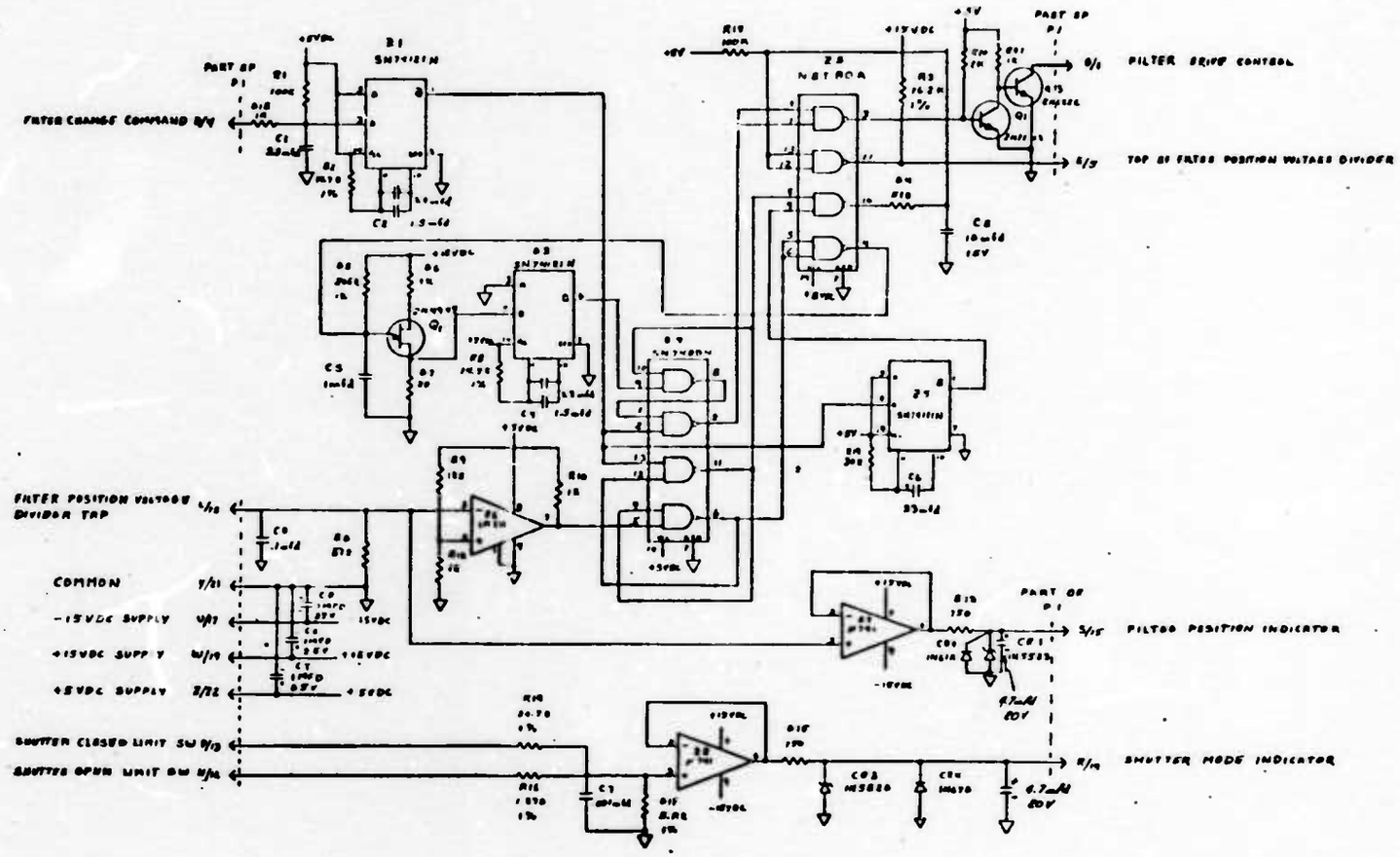

Figure 12-6. (7-21) Schematic - Control Electronics Boards 3009 and 3011

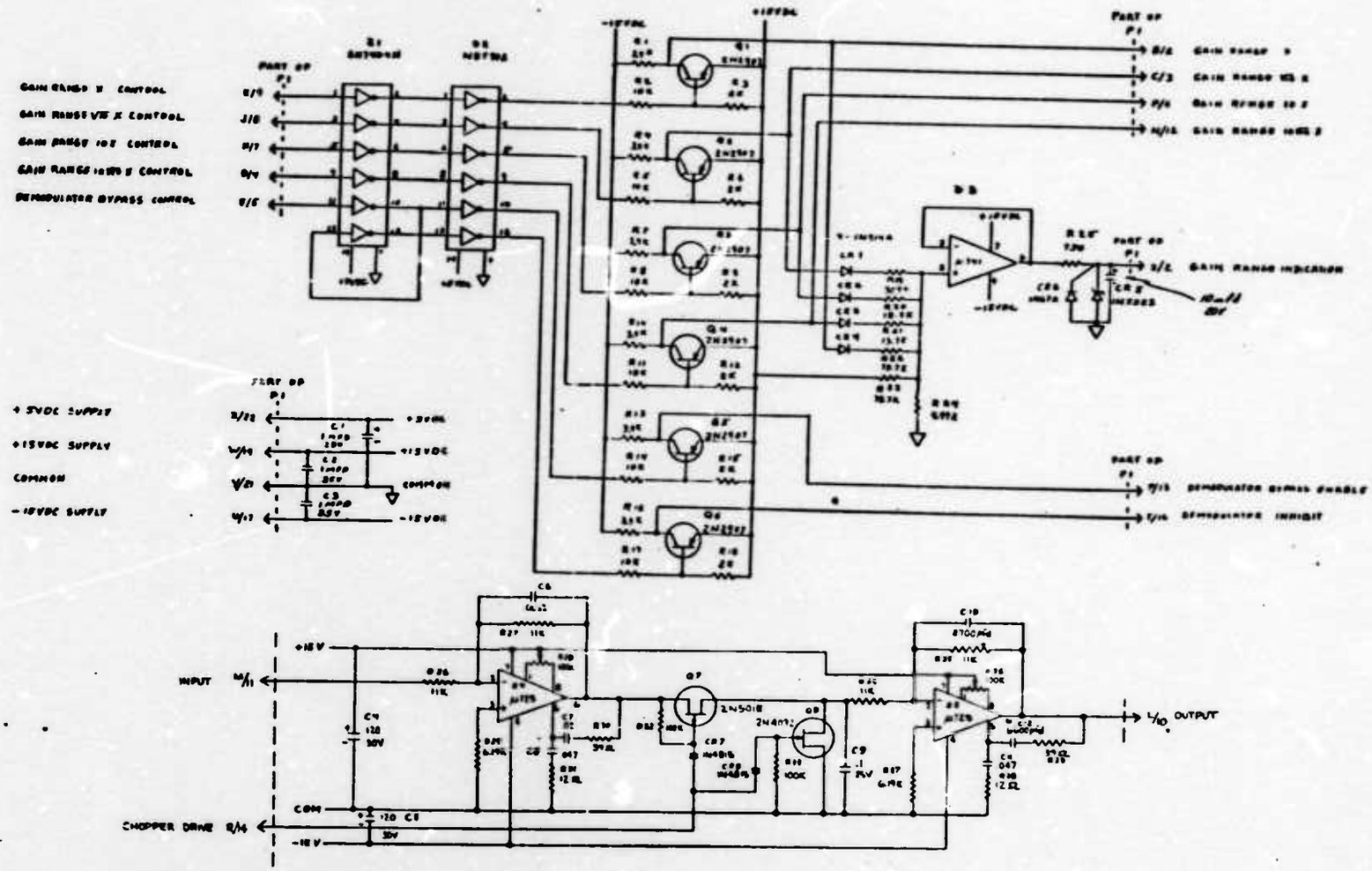

Figure 12-7. (7-16) Schematic - Control Electronics Board 3004

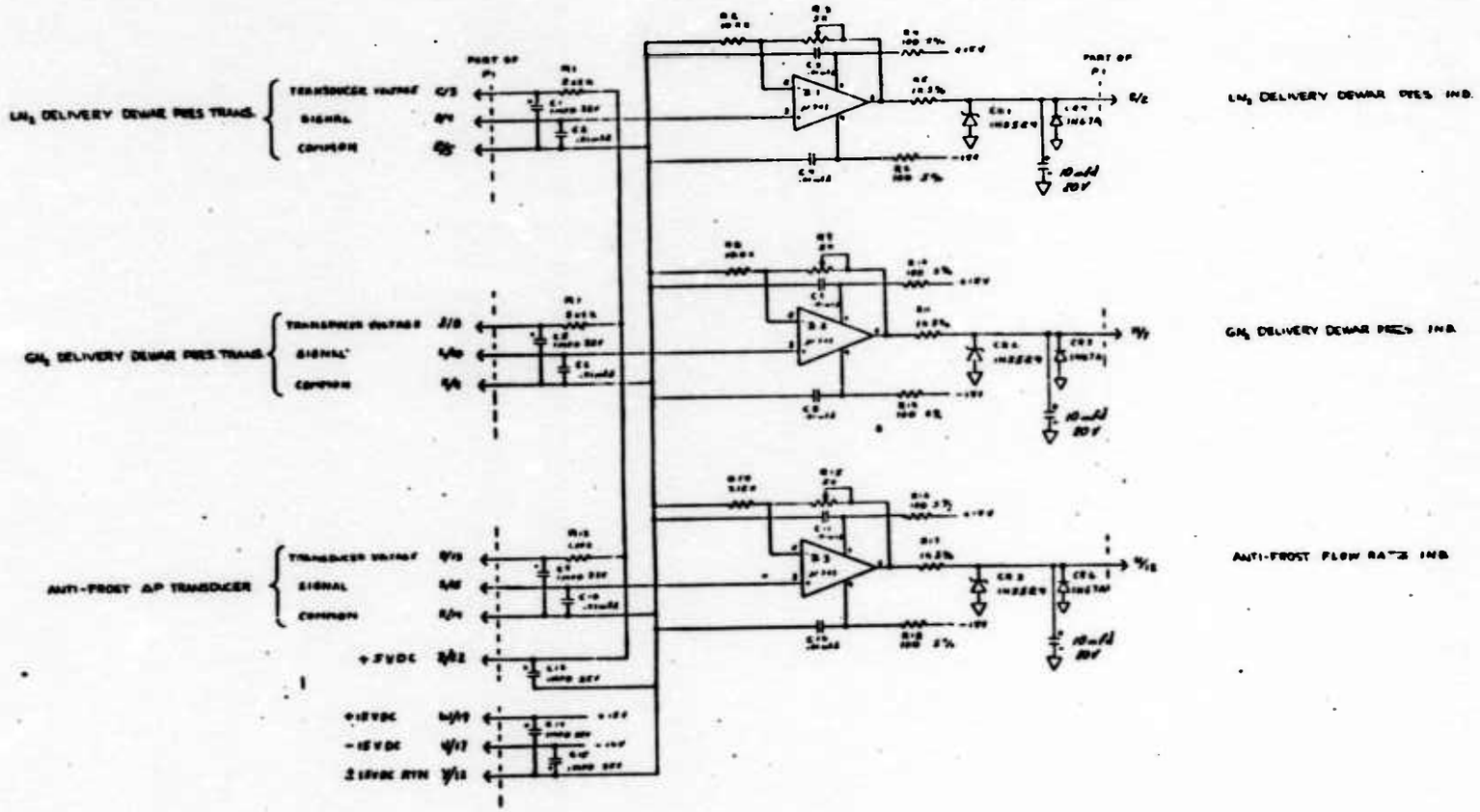

Figure 12-8. (7-15) Schematic - Control Electronics Board 3003

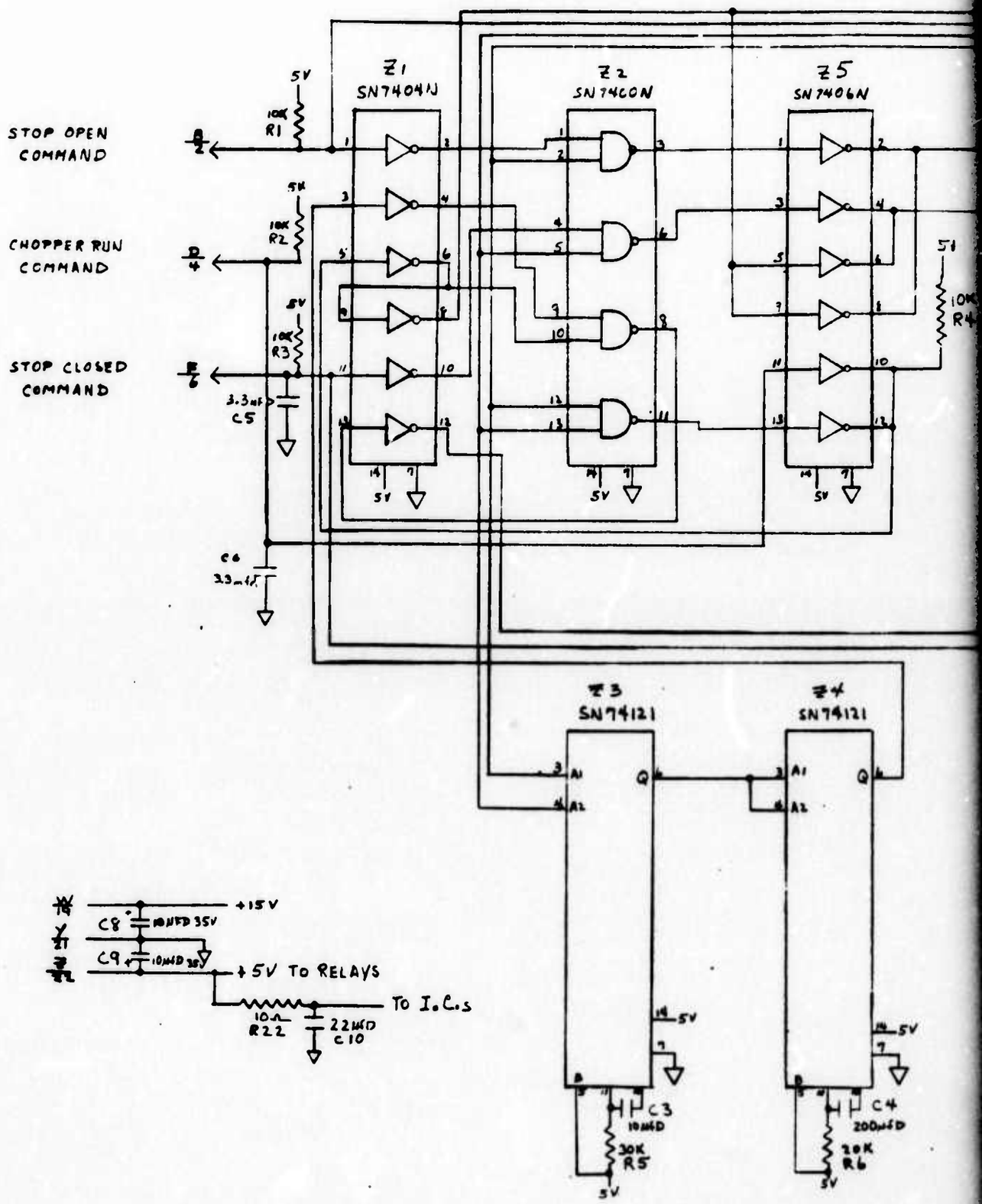
STOP OPEN COMMAND
CHOPPER RUN COMMAND
STOP CLOSED COMMAND
Z1 SN7404N
Z2 SN7400N
Z5 SN7406N
Z3 SN74121
Z4 SN74121
R1 10K
R2 10K
R3 10K
R4 10K
C5 3.3uF
C6 33uF
C8 10uFD 35V
C9 10uFD 35V
+15V
+5V TO RELAYS
TO I.C.s
R22 10Ω
C10 22uFD
C3 10uFD
C4 200uFD
R5 30K
R6 30K
5V

A

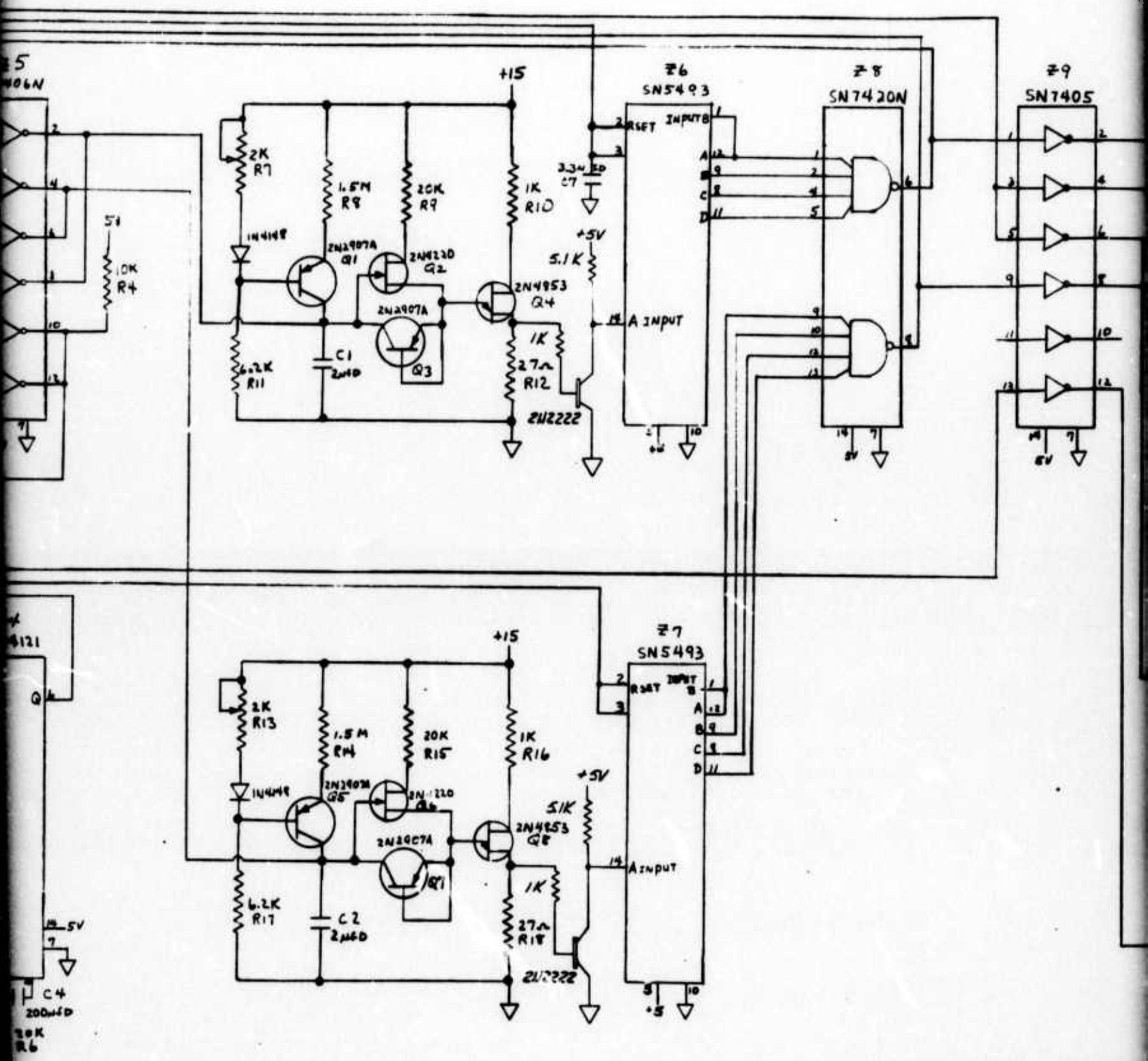

Figure 12-9. (7-23) Sch

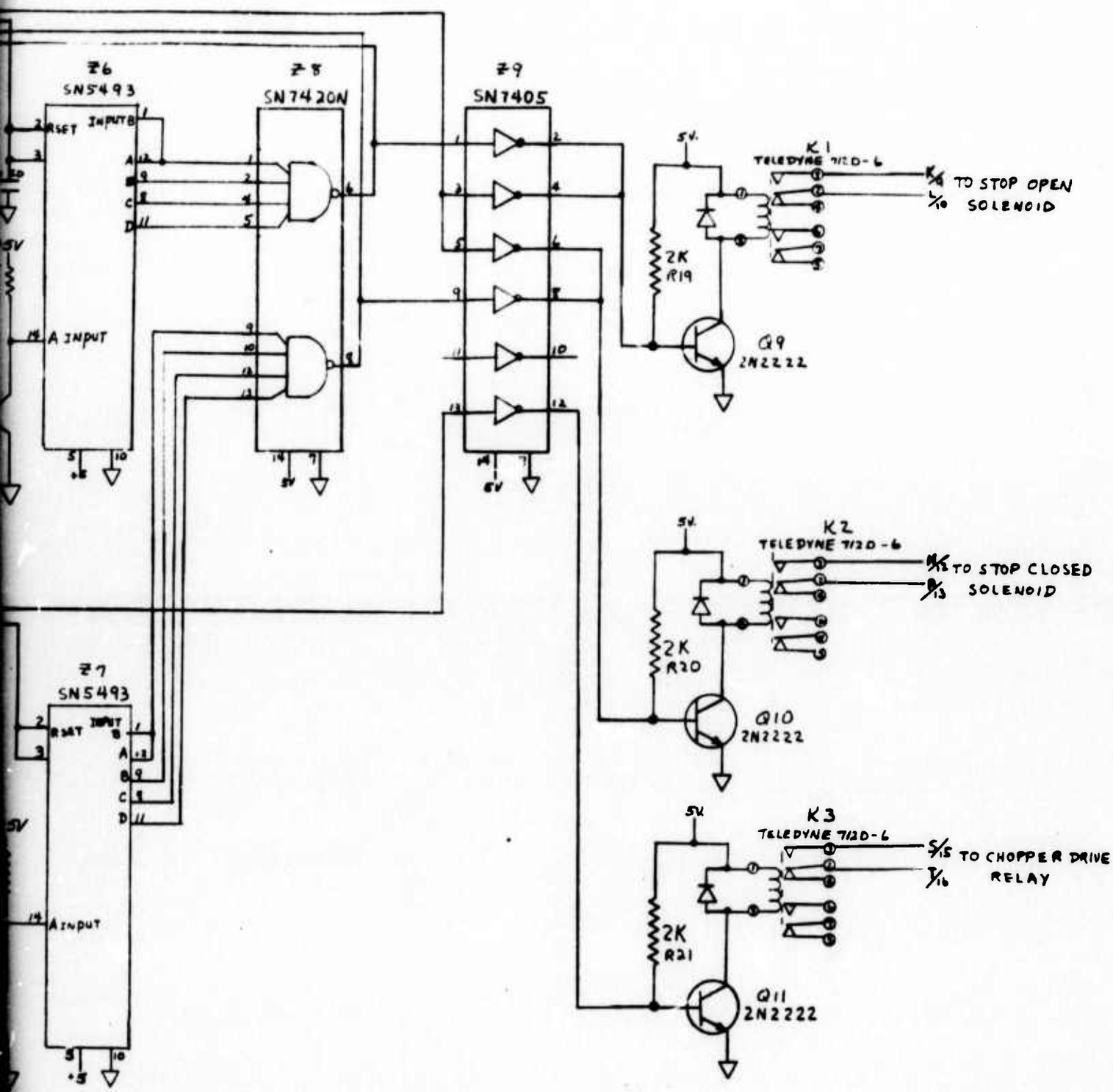

Figure 12-9. (7-23) Schematic - Control Electronics Board 3012

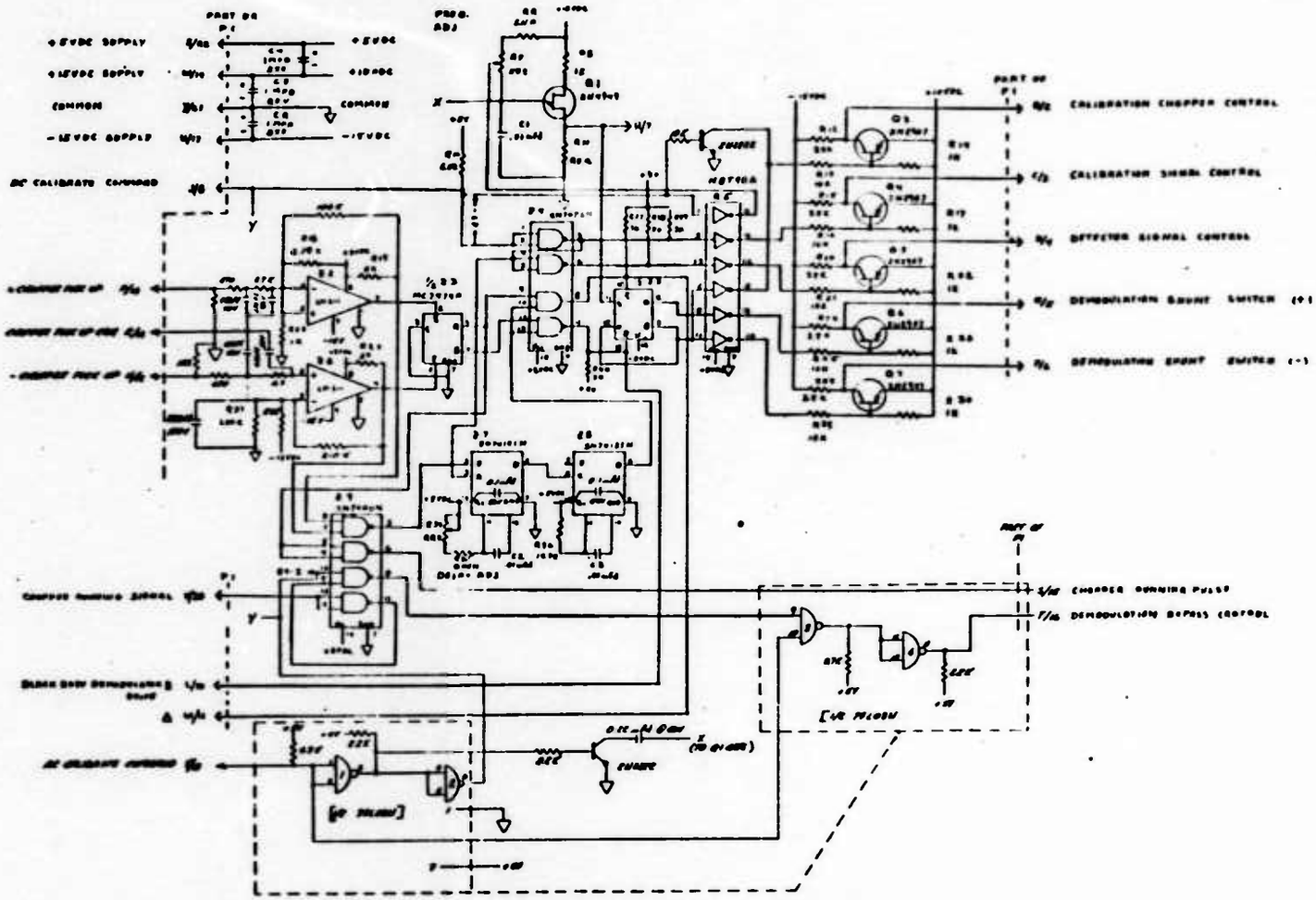

Figure 12-10. (7-17) Schematic - Control Electronics Board 3005

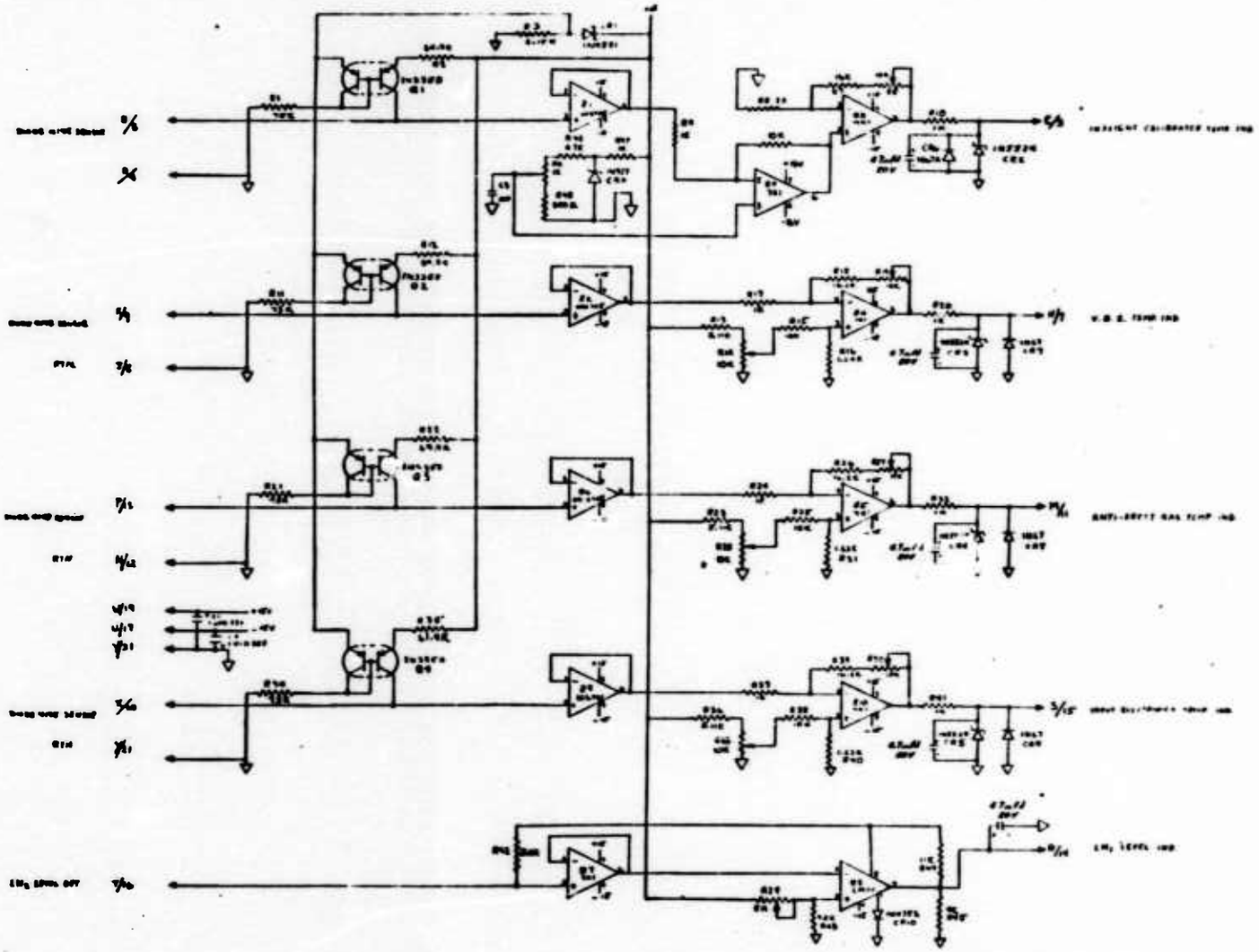

Figure 12-11. (7-14) Schematic - Control Electronics Board 3002

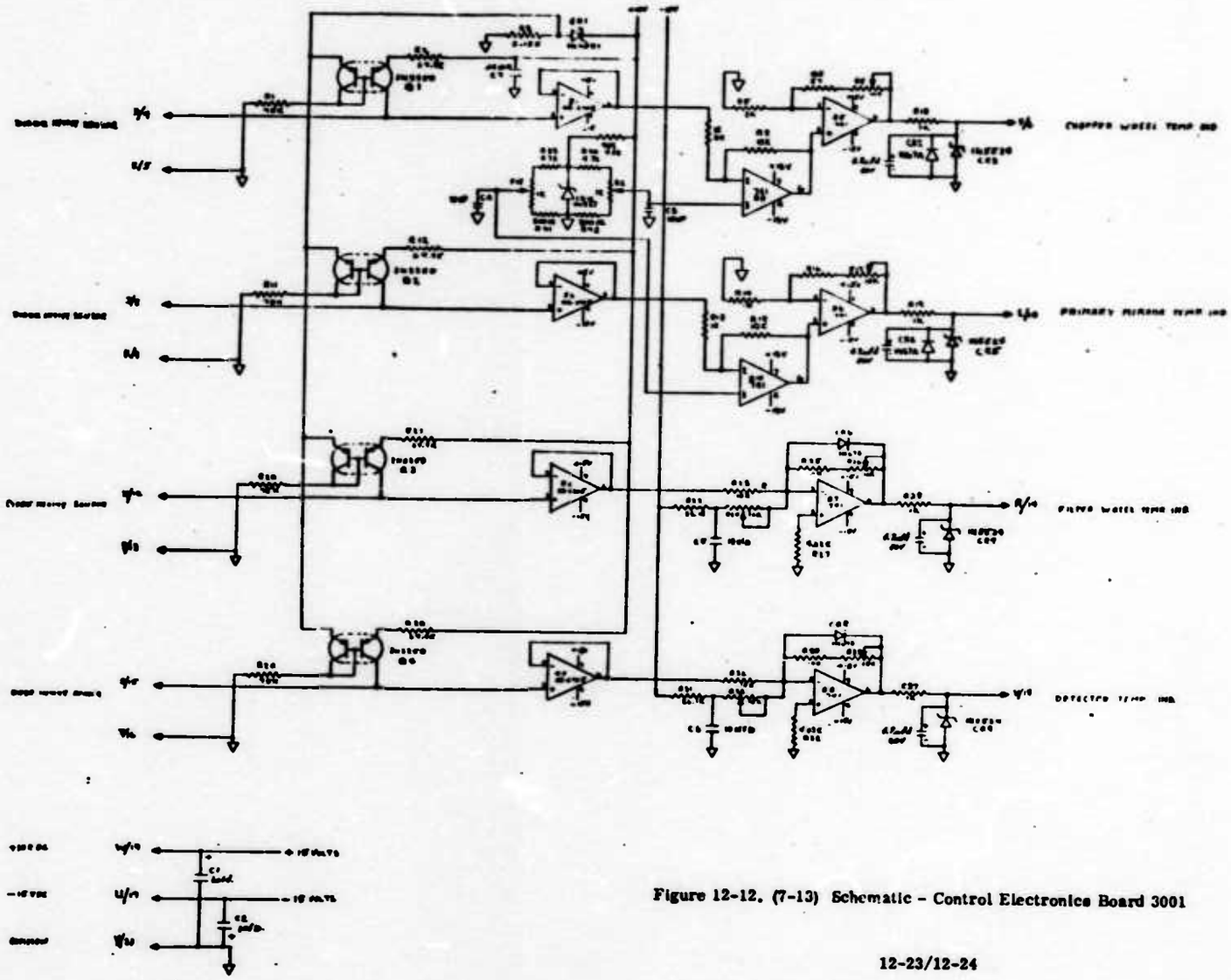

Figure 12-12. (7-13) Schematic - Control Electronics Board 3001

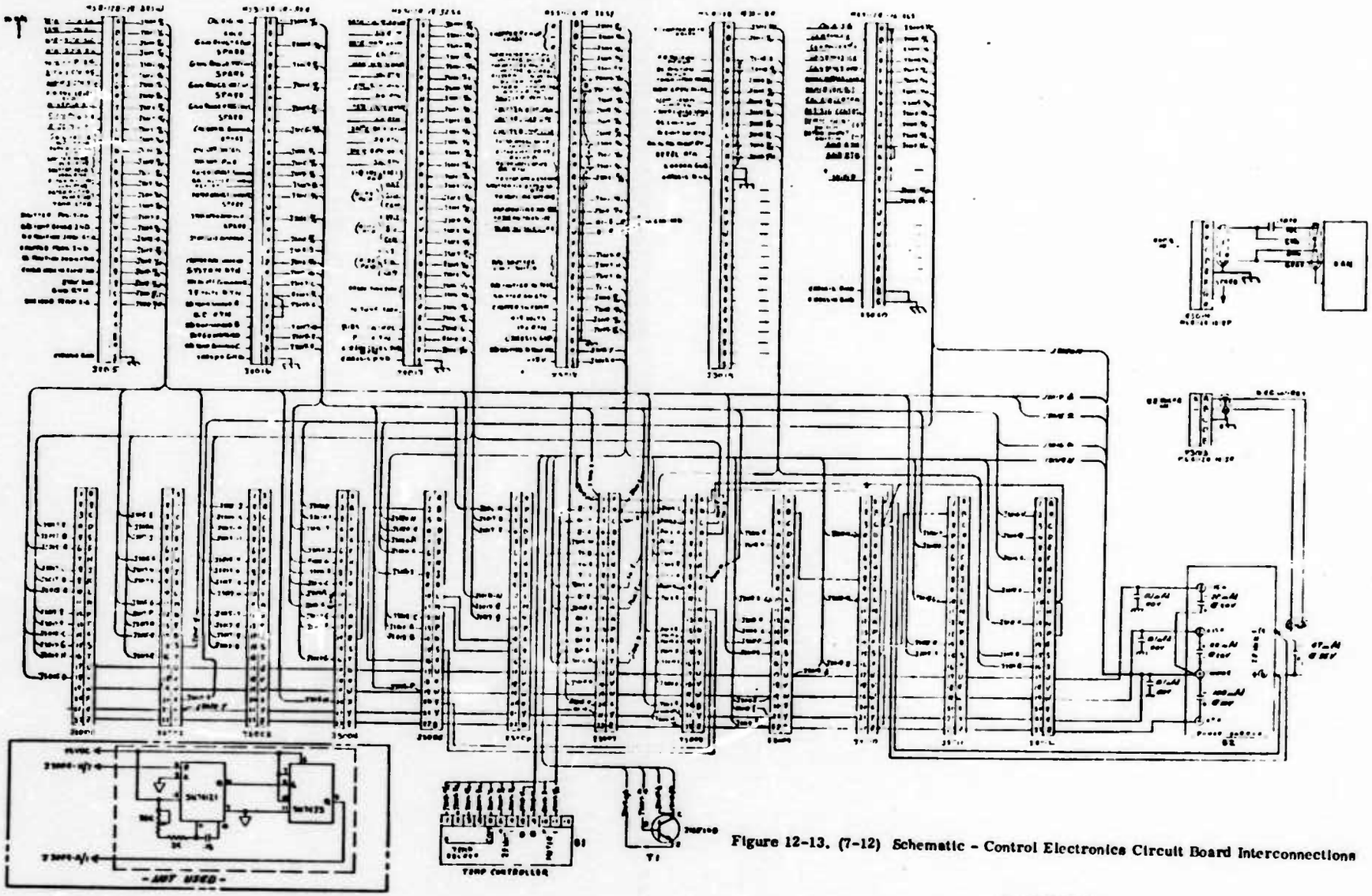

Figure 12-13. (7-12) Schematic - Control Electronics Circuit Board Interconnections

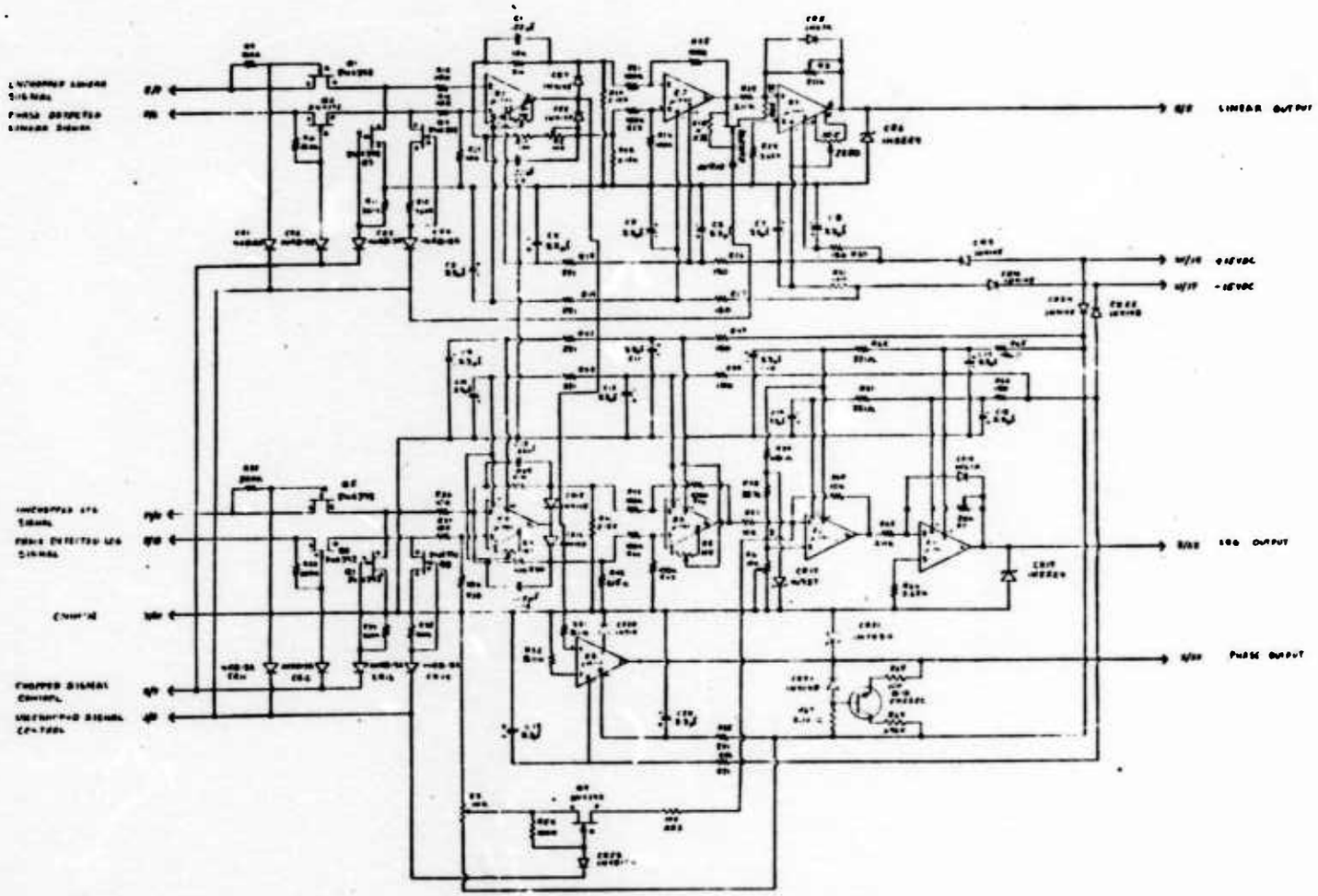

Figure 12-14. (7-10) Schematic - Output Electronics Board 2002

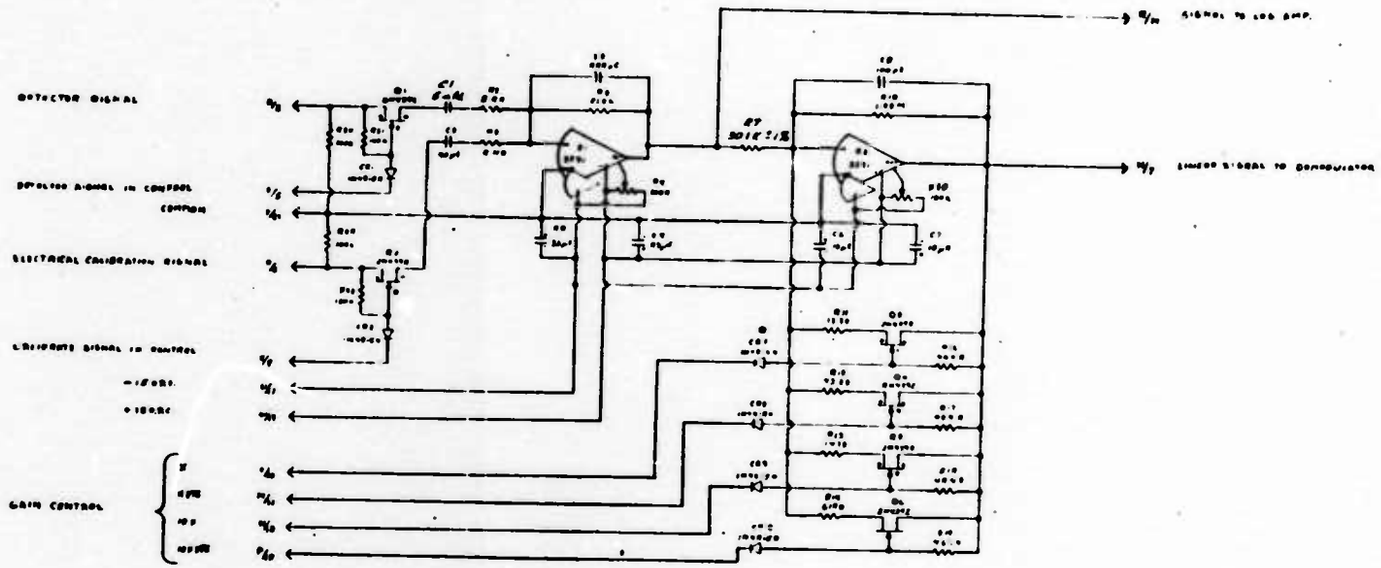

Figure 12-15. (7-5) Schematic - Input Electronics Board 1001

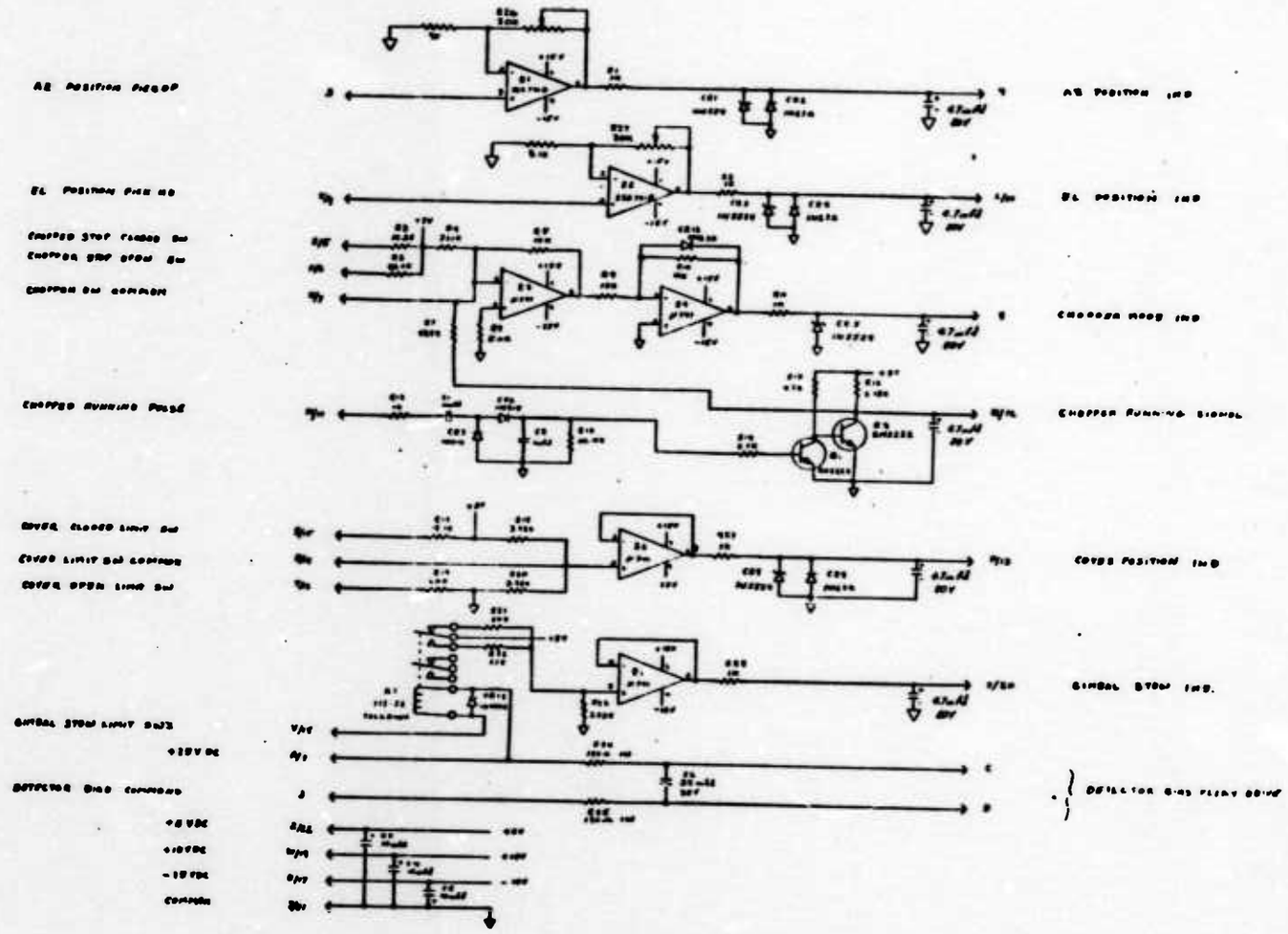

Figure 12-16. (7-20) Schematic - Control Electronics Board 3008

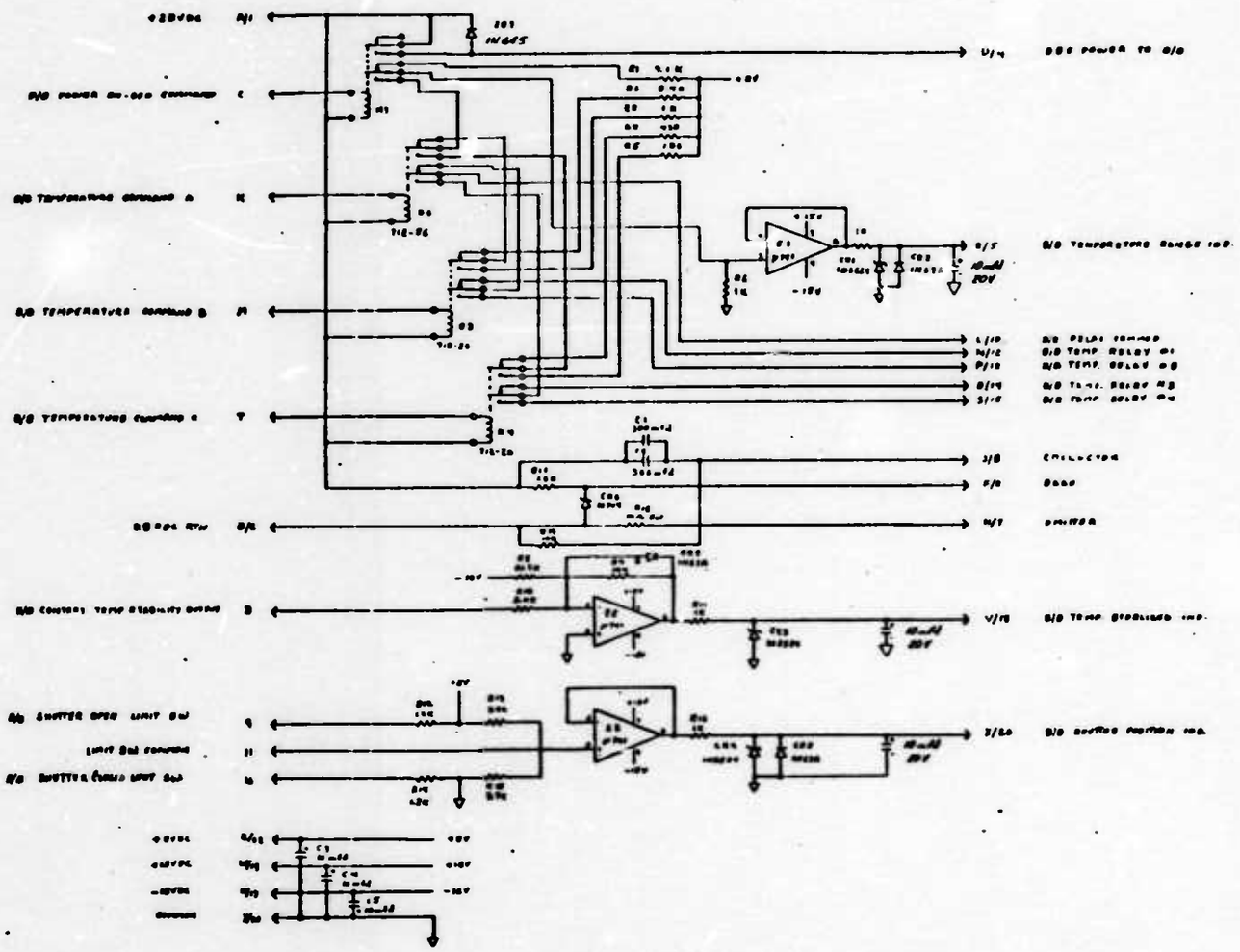

Figure 12-17. (7-19) Schematic - Control Electronics Board 3007

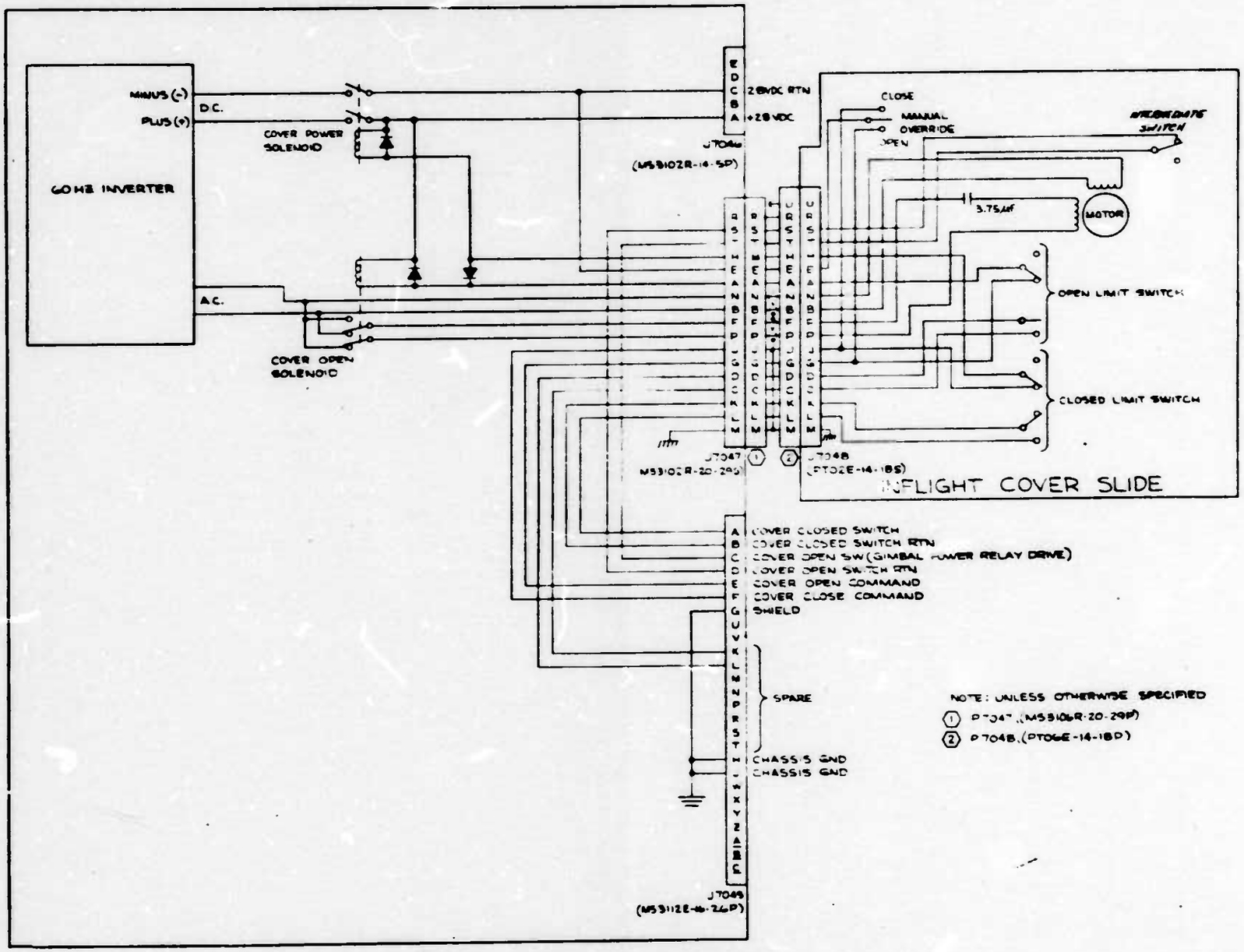

Figure 12-18. (4-2) Schematic of Inflight Cover Assembly

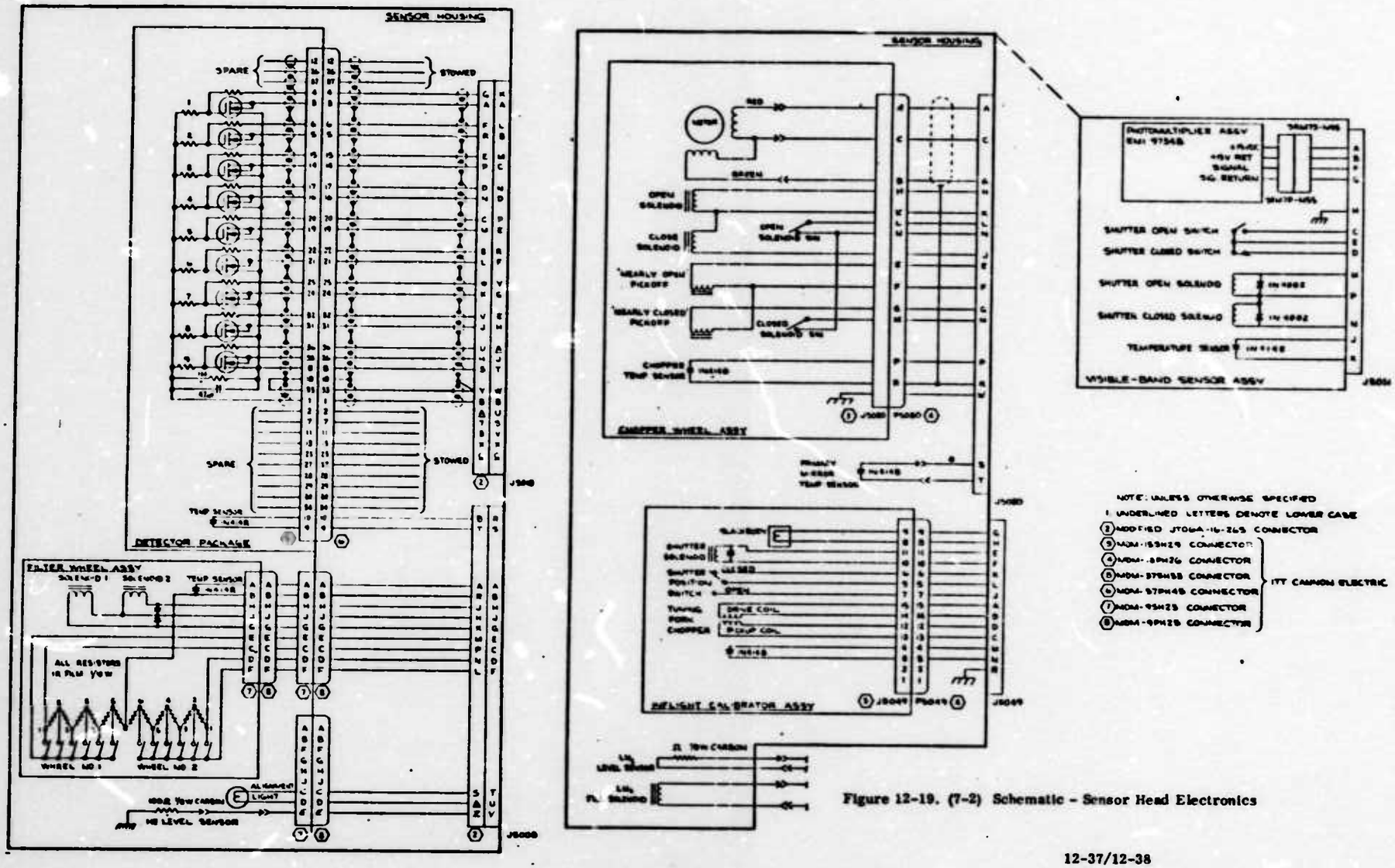

Figure 12-19. (7-2) Schematic - Sensor Head Electronics

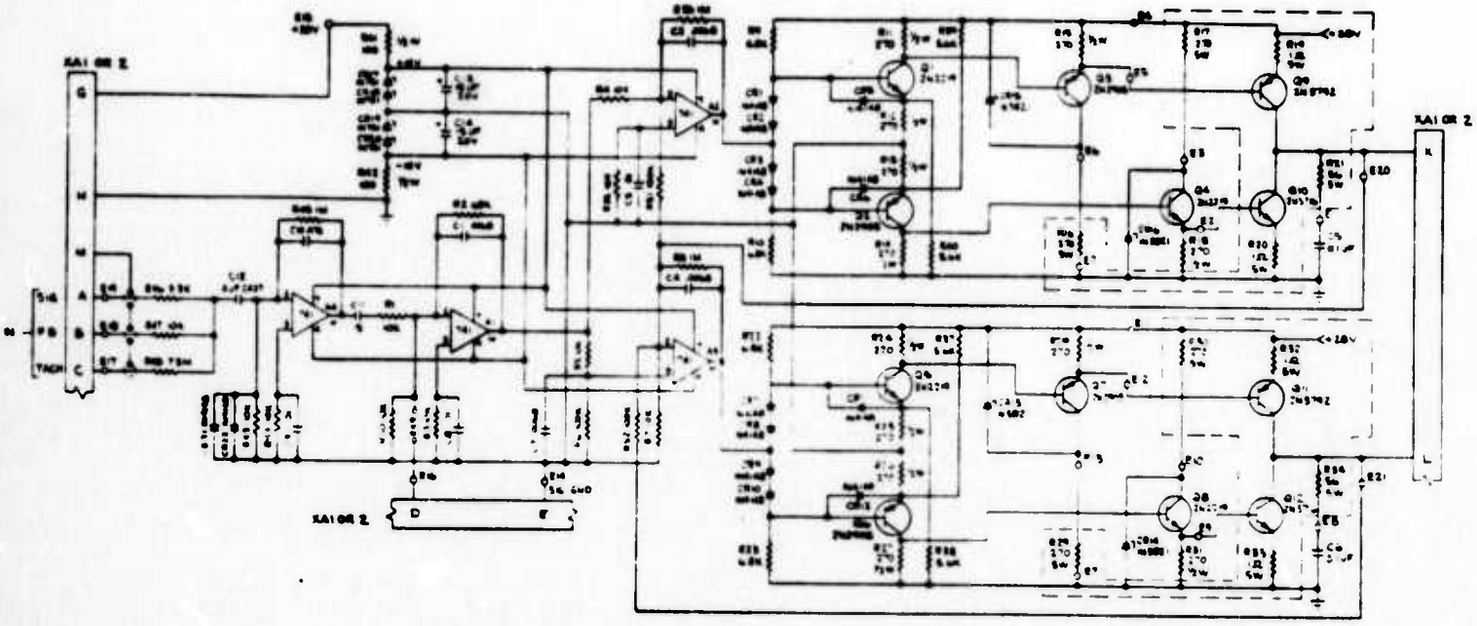
XA1 OR 2
XA1 OR 2
XA1 OR 2

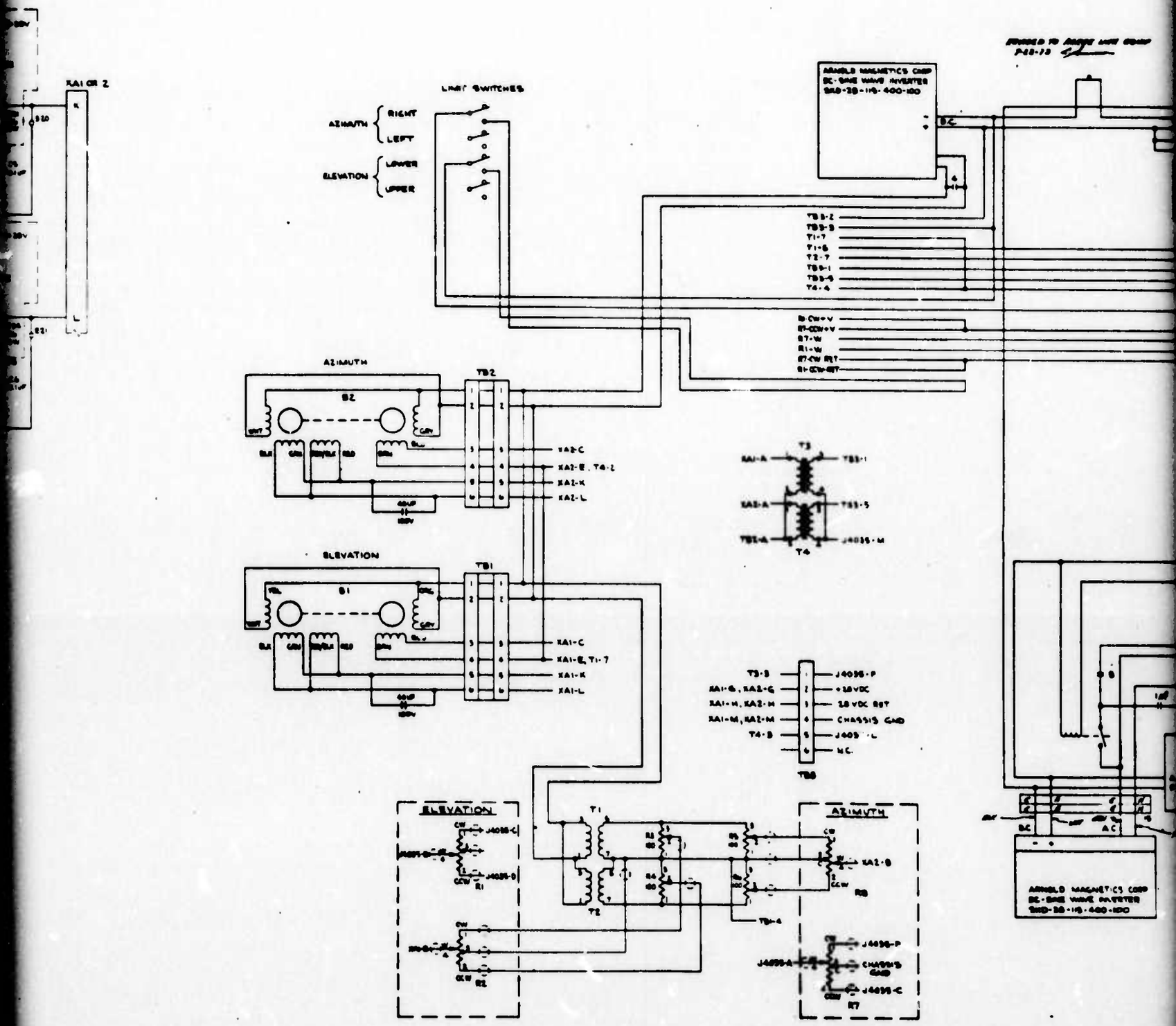

Figure 12-20. (5-2) Schematic - Gimba

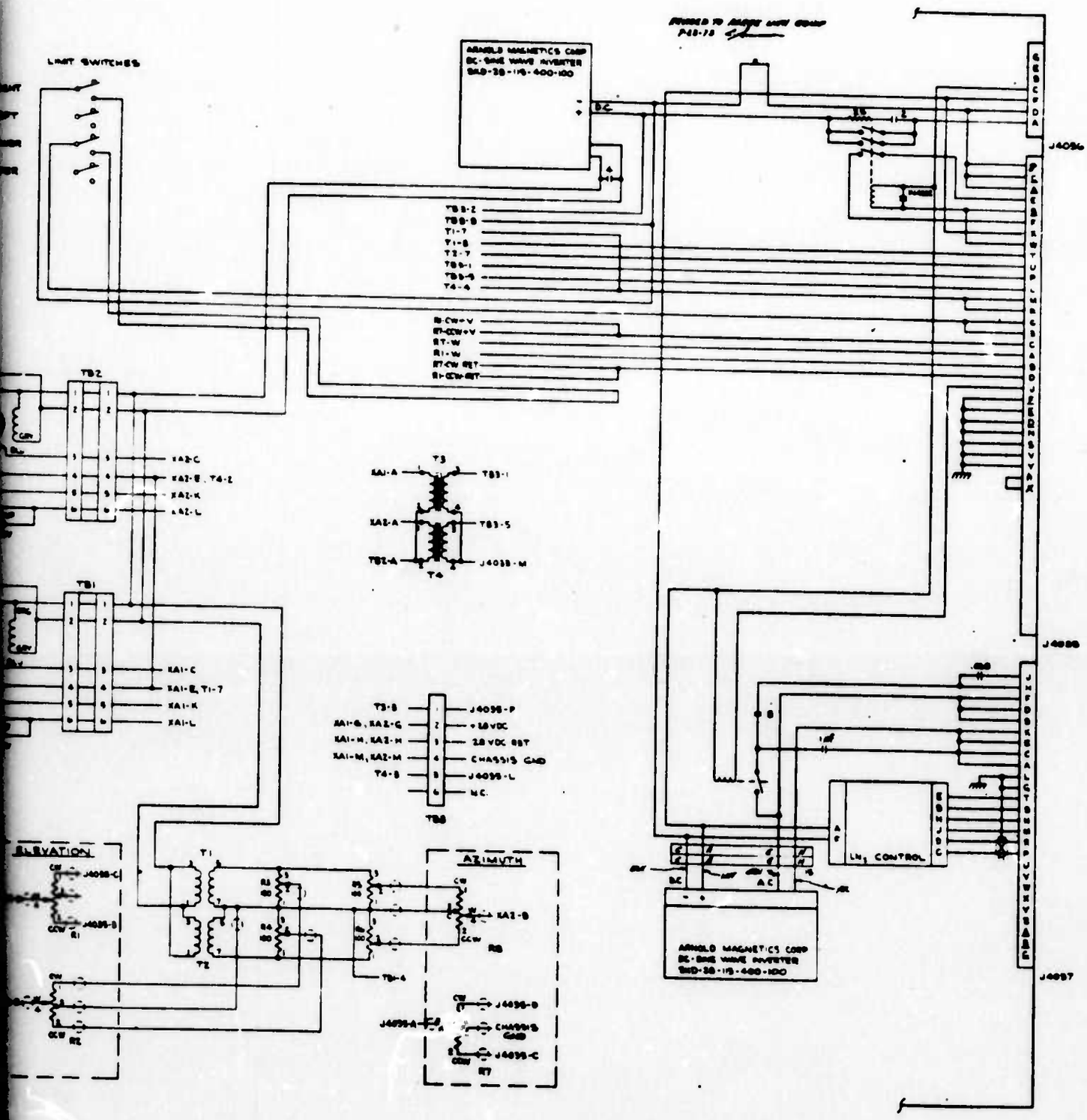

Figure 12-20. (5-2) Schematic - Gimbal

13. RECOMMENDATIONS

13.1 RECOMMENDED CHANGES TO EQUIPMENT

13.1.1 Cover Mechanism

In the course of field operations, particularly when the radiometer was exposed to windy dusty conditions in either the preparation hangar or on the runway at Holloman Air Force Base, the operating efficiency of the open slide cover actuating mechanism was threatened by an accummulation of sand and dust. A temporary fix in the form of a plastic sheet taped over the ways and screw mechanism was used and appeared to be capable of preventing trouble from developing in this mechanism. For more reliability, however, it is recommended that the cover mechanism be redesigned to incorporate a covered screw thread such as a Saginaw Ball Bearing screw actuator. To prevent the formation of ice on the extended mechanism when the system was exposed to icing conditions the screw actuator should be covered with a silicon bellows boot. The complete mechanism should be highly lubricated with Dow Corning Fluid consistency number 33 silicone grease.

13.1.2 Liquid Nitrogen Dewars

The manufacturers of the on-board LN_2 dewars have improved their method of holding down the dewar caps. For increased reliability these dewars should be returned to the manufacturer for a modification to accomplish this.

13.1.3 Electronic Cannisters

It is expected that the housekeeping data telemetered from the latest flight will, when reduced, indicate that the size of the heaters on the electronic cannisters can be increased and the insulation thickness reduced. This will allow the electronic cannisters to be more closely controlled at the proper operating temperatures when the ambient temperature varies from 110 F to -70 F.

13.1.4 Antifrost Device

The antifrost device should be improved using information gained in recent work so that it is more thrifty in the use of gaseous nitrogen.