AD-768 283

MOLECULAR BEAM EPITAXY OF II-VI COMPOUND WAVEGUIDES

Donald L. Smith

Perkin-Elmer Corporation

Prepared for:

Office of Naval Research
Advanced Research Projects Agency

30 September 1973

DISTRIBUTED BY:

NTIS

National Technical Information Service
U. S. DEPARTMENT OF COMMERCE
5285 Port Royal Road, Springfield Va. 22151

AD 768283

MOLECULAR BEAM EPITAXY OF II-VI COMPOUND WAVEGUIDES

CONTRACT No. N00014-73-C-0280

DR. DONALD L. SMITH
THE PERKIN-ELMER CORPORATION

QUARTERLY TECHNICAL REPORT
1 JULY THROUGH 30 SEPTEMBER 1973

D D C
RECEIVED
OCT 18 1973
B

SPONSORED BY
ADVANCED RESEARCH PROJECT AGENCY
ARPA ORDER No. 2327

DISTRIBUTION STATEMENT A
Approved for public release;
Distribution Unlimited

Reproduced by
NATIONAL TECHNICAL
INFORMATION SERVICE
U S Department of Commerce
Springfield VA 22151

Unclassified

SECURITY CLASSIFICATION OF THIS PAGE (When Data Entered)

REPORT DOCUMENTATION PAGE		READ INSTRUCTIONS BEFORE COMPLETING FORM
1. REPORT NUMBER	2. GOVT ACCESSION NO.	3. RECIPIENT'S CATALOG NUMBER
4. TITLE (and Subtitle) MOLECULAR BEAM EPITAXY OF II-VI COMPOUND WAVEGUIDES		5. TYPE OF REPORT & PERIOD COVERED Quarterly Report 1 July through 1 Sept.73 6. PERFORMING ORG. REPORT NUMBER 11719
7. AUTHOR(s) Dr. Donald L. Smith		8. CONTRACT OR GRANT NUMBER(s) N00014-73-C-0280
9. PERFORMING ORGANIZATION NAME AND ADDRESS Perkin-Elmer Corporation 50 Danbury Road Wilton, Conn. 06897		10. PROGRAM ELEMENT, PROJECT, TASK AREA & WORK UNIT NUMBERS
11. CONTROLLING OFFICE NAME AND ADDRESS Advanced Research Projects Agency		12. REPORT DATE 30 September 1973 13. NUMBER OF PAGES ~~21~~ 23
14. MONITORING AGENCY NAME & ADDRESS (if different from Controlling Office) Office of Naval Research		15. SECURITY CLASS. (of this report) Unclassified 15a. DECLASSIFICATION/DOWNGRADING SCHEDULE

16. DISTRIBUTION STATEMENT (of this Report)

17. DISTRIBUTION STATEMENT (of the abstract entered in Block 20, if different from Report)

18. SUPPLEMENTARY NOTES

19. KEY WORDS (Continue on reverse side if necessary and identify by block number)

epitaxy; vacuum evaporation; zinc telluride; vapor pressure

20. ABSTRACT (Continue on reverse side if necessary and identify by block number)

II-VI compound optical waveguide growth is being pursued using molecular beam epitaxy, a closely-controlled form of vacuum evaporation, under ultra-high vacuum. Zn and Te_2 vapor pressures over the elements and over ZnTe have been measured and correlated with film growth behaviour. Optically-clear, mirror-smooth, monocrystalline, 1 micron thick films of ZnTe have been grown at 1 micron/hour on 350° CaF_2(111) substrates using separate

DD FORM 1 JAN 73 1473 EDITION OF 1 NOV 65 IS OBSOLETE

Unclassified

SECURITY CLASSIFICATION OF THIS PAGE (When Data Entered)

elemental sources of 6-nines pure Zn and Te. Film stoichiometry was insensitive to incident Zn/Te flux ratio. Films were poly crystalline at 450°C and ceased to deposit at 500°C. Films grown from a single 5-nines pure ZnTe source of of inferior quality. Single-crystal CdSe(0001) substrates have been prepared by Br/MeOH polishing and ion bombardment.

PERKIN-ELMER

30 September 1973

QUARTERLY TECHNICAL REPORT

1 July 1973 Through 30 September 1973

ARPA Order No. 2327

Contract No. N00014 73-C-0280

Program Code No. 3D10

Principal Investigator:
Dr. Donald L. Smith
203-762-6016

Contractor:
Perkin-Elmer Corporation

Scientific Officer:
Director, Naval Research Laboratory

Effective Date of Contract:
1 March 1973

Title: Molecular Beam Epitaxy of II-VI Compound Waveguides

Contract Expiration Date:
31 December 1973

Amount of Contract: $50,000.00

The views and conclusions contained in this document are those of the authors and should not be interpreted as necessarily representing the official policies, either expressed or implied, of the Advanced Research Projects Agency or the U.S. Government

Sponsored by

Advanced Research Project Agency

ARPA Order No. 2327

TABLE OF CONTENTS

Summary 1

A. Crystal Grower 3

B. Evaporation Characterization 4

C. ZnTe Growth 7

D. Substrate Preparation 9

E. Waveguide Coupling 11

F. Conclusions & Program Plans 12

References 13

Table 1 14

Figures 15

Summary

This work is concerned with generating high-quality single-crystal thin films of II-VI compound semiconductors for ultimate use as electro-optically active (index-modulating) elements in integrated optical circuits. We are pursuing the relatively unexploited film growth technique of molecular beam epitaxy, a sophisticated modification of vacuum evaporation, because of its demonstrated unique ability to generate exceptionally smooth films and multilayer structures with precisely defined geometries and sharp interfaces, properties of particular value in integrated optics applications. We are specifically concerned with optimizing the growth parameters for generating films of zinc and cadmium selenides and tellurides and with evaluating these films by examining waveguiding properties in the visible and infrared regions. This report covers the first 3 months of effort (1 July through 30 September, 1973) and outlines plans for the next and final 3 months (through 31 December, 1973) of the contract period.

We have measured the evaporation characteristics of Zn, Te, and ZnTe using mass spectrometry in order to be in a better position to interpret the growth characteristics of ZnTe films. We plan to collect similar data for the Cd-Te system and, if necessary, for the Cd-Se and Zn-Se systems. We have generated mirror-smooth, optically-clear, single-crystal, 1μm-thick films of ZnTe on CaF_2(111) using 6-nines pure Zn and

Te as source materials. Films grown from 5-nines pure ZnTe source material were of considerably lower quality. We have suceeded in chemically polishing CdSe, a much more desirable substrate than CaF_2, to a mirror-smooth finish, and have generated from it, by ion bombardment and annealing under vacuum, a surface of sufficient crystallographic quality, as evidenced by low energy electron diffraction, for epitaxial growth. Work next quarter will concentrate on growth of ZnTe, CdTe, and ternary alloys on this substrate.

We have been unable to couple He-Ne laser light into ZnTe films by either the prism, cleaved-edge, or tapered-edge techniques. We have not contemplated a phase-grating coupler due to the complexity and consequent costliness of this technique considering the large number of films which we expect to be evaluating, but it may be necessary to choose this route. We plan to first experiment with generating a shallow taper on the film edge by employing a mask during film growth.

A. Crystal Grower

The molecular beam epitaxy (MBE) system being used for this work is shown schematically in Fig. 1. The two-chamber ultra-high vacuum system is divided by an isolation valve so that the growth chamber may be kept at 10^{-10} Torr while the five substrates are being loaded and cleaned in the preparation/analysis chamber. Source materials are evaporated from graphite Knudsen cells surrounded by an LN_2-cooled shroud to reflect heat and adsorb contaminants. Chemical composition and crystallinity of both substrates and films are examined by Auger spectroscopy and LEED in the preparation/analysis chamber.

Several improvements have been made to this system during the course of the present contract. The shutter and LN_2 shroud have been lined with stainless-steel mesh, solving the problem of film peelings falling onto the ovens. Magnetic shields have been installed around the ion pumps to improve the quality of the very low voltage LEED patterns which have been found necessary for II-VI compound examination. A fail-safe circuit has been added which shuts down the Knudsen cells if LN_2 cooling fails, so that the system may now be left operating unattended overnight. Facilities have been added for cleaning substrates by rare gas ion bombardment and by oxidation/reduction in O_2 and H_2 backgrounds.

B. Evaporation Characterization

In order to provide a sound basis for detailed analysis of the kinetics of II-VI compound formation and film growth, we began by examining the evaporation characteristics of Zn, Te, and ZnTe from the Knudsen cells, and we plan to do the same for Cd, Se, CdTe, CdSe, and ZnSe. At a fixed temperature for each cell, Zn and Te_2 (the dimer is the predominant species under conditions encountered here[1]) evaporation rates from solid Zn and Te were established by interferometric measurement of the film thickness deposited in a known time interval on a 300°K substrate. From the thickness,

$$W = \frac{d\rho}{t} \qquad 1.$$

W = Evaporant flux at the substrate, molecules/cm^2xsec.

d = Film thickness, cm

ρ = Film density, molecules/cm^3

t = Deposition interval, sec

Bulk elemental densities and unity sticking coefficients were assumed. Along the normal to the Knudsen cell orifice[2]

$$W = \frac{2F}{2\pi R^2} \qquad 2.$$

F = Effusion rate from cell orifice, molecules/sec

R = Orifice-to-substrate distance, cm

The Knudsen effusion equation[2]

$$F = \frac{3.51\times10^{22}AP}{\sqrt{MT}} \qquad 3.$$

A = Orifice area, cm^2

P = Vapor pressure within Knudsen cell, Torr

M = Vapor molecular weight, amu

T = Cell temperature, °K

may now be used to calculate the vapor pressure since the Knudsen conditions apply: zero-length orifice, mean free path at orifice much larger than orifice diameter, isothermal cell, and vapor-liquid (or solid) equilibrium. Although the orifices used are actually twice as long as their diameter, they still behave as zero-length orifices at the normal since there the projected area of the orifice walls is negligible. Zn and Te_2 vapor pressures calculated in this manner from data taken at 591 and 639°K, respectively, were found to be 0.51 and 0.44, respectively, of those reported in the literature[3]. It is not presently clear which of the two values is the more accurate. The experiment will be repeated using an LN_2-cooled substrate to ensure a unity sticking coefficient and atomic absorption determination of film mass to eliminate the density factor.

During the above elemental deposition experiment, the mass spectrometer signals at amu 64 (Zn^+) and at amu 130 (Te_2^{++} + Te^+) were recorded. Subsequently, ZnTe was evaporated from a third cell and the same signals were recorded at incremental cell temperatures covering almost three orders of magnitude in signal level. It is known that ZnTe (and the other II-VI compounds) evaporate dissociatively[1]:

$$ZnTe(s) \rightleftharpoons 2Zn(g) + Te_2(g); \qquad 4.$$

and, in fact, no signal corresponding to ZnTe(g) was detected.

Vapor pressures of Zn and Te_2 over ZnTe may be calculated from the mass spectrometer signals if one applies a temperature correction which arises from the fact that the signal from the ion box of the mass spectrometer is proportional to the density of a given species in the ion box, and since the box is open-ended,

$$A \sim \rho = \frac{W}{V}. \qquad 5.$$

A = Mass spectrometer signal amperes

ρ = Vapor density in ion box, molecules/cm^3

V = Molecular velocity, cm/sec

Recalling that [2]

$$V \sim \sqrt{T} \qquad 6.$$

and using equations 2 and 3, we conclude that for a given species and evaporation geometry,

$$A \sim \frac{\rho}{T}. \qquad 7.$$

From the A_{Zn} and A_{Te_2} vs. T data, the P_{Zn} and P_{Te_2} calibrations, and equation 7, the vapor pressure vs. T data for ZnTe evaporation were calculated. The equilibrium constant for this dissociative evaporation (equation 4) is

$$K_P = P^2_{Zn} P_{Te_2}, \qquad 8.$$

and for thermodynamic consistency this constant must obey the relationship[4]

$$\log K_P \sim 1/T. \qquad 9.$$

Fig. 2 shows, in fact, that it does. The data of Goldfinger and Jeunehomme[5] agree reasonably well, although their slope is somewhat steeper.

Using Fig. 2, one may accurately extrapolate down another 100 to 200°K to the range of substrate temperatures used for ZnTe growth and may thereby calculate the vapor pressure over ZnTe in a range too low to measure directly. Since equation 3 also represents the flux from an evaporating surface, the re-evaporation rate of a growing ZnTe film as a function of substrate temperature may now be determined. This result is plotted in Fig. 3. The rise in evaporation rate with temperature is seen to be very steep, so that the upper limit on substrate temperature for ZnTe growth may be closely specified at 425-475°C for normal growth rates. In addition, crystallinity generally improves for increasing substrate temperature, so that we have now limited the range of promising substrate temperatures to a narrow band of 100° or so, which is a very useful and time-saving conclusion.

C. ZnTe Growth

We have grown ZnTe films about 1μm thick on polished CaF_2(111) from a 5-nines pure ZnTe source and from separate 6-nines pure Zn and Te sources. Films from the former source were consistently poorer in quality than those from the latter, presumably because of the added 10ppm of impurity. Poor quality was evidenced by swirls of discoloration and by depos-

its ½ as thick, for the same exposure time, as that for the best films. These features were occasionally observed for films grown from the elemental sources and could be correlated with other sources of contamination or with a poorly-polished substrate. Films grown from elemental sources at 1μm/hr and at substrate temperatures of 350, 400, and 450°C were generally mirror-smooth and optically clear with the orange hue characteristic of semiconductors in this bandgap range. Film thickness was independent of substrate temperature and was about ½ as thick as predicted from element deposition rate data (section B). At 500°C a deposit was obtained only occasionally, perhaps because the substrate was actually cooler than measured. No deposit was obtainable at higher temperatures. These observations are consistent with the steep evaporation rate slope of Fig. 3 but suggest that the curve should be shifted about 25°C to the right.

ZnTe on CaF_2 could not be effectively examined for crystallinity by LEED At beam energies greater than 100eV, diffraction spots were masked by a high incoherent background which is apparently characteristic of II-VI compounds (see section D). Below 100V, surface charging precluded pattern observation. Epitaxy could, nevertheless, be verified in the following manner. Due to the film/substrate strain resulting from the thermal expansion differential, films would occasionally crack in a mosaic pattern. One such pattern of a film grown at 350°C is shown in Fig. 4. The hexagonal

symmetry of the cracks indicates cleavage of a single crystal oriented in the (0001) wurtzite or the (111) cubic plane. The mosaic pattern of a film grown at 450°C showed random breakage with no symmetry, suggesting the reversion to polycrystallinity at higher substrate temperatures which has been observed by other workers.[6]

Composition of films grown at 350°C and 1 μm/hr has been determined by Auger spectroscopy for a wide range of incident Te/Zn flux ratios ($\frac{1}{4} < 2W_{Te_2}/W_{Zn} < 4$) and has been found constant to within the 10% accuracy of the technique. This result was expected since Zn and Te are orders of magnitude more volatile than ZnTe and an excess of one or the other would, therefore, be expected to evaporate. The presence of a Zn or Te_2 excess might still encourage the formation of lattice vacancies in the ZnTe, but these small deviations from stoichiometry would be detectable only by Hall effect and resistivity measurements.

D. Substrate Preparation

The choice among substrates for thin film growth represents a tradeoff amongst many variables, as shown by Table 1. Good lattice constant and thermal expansion match between film and substrate and effective substrate preparation procedures all improve film quality. Transmission in the visible allows use of visible light for preliminary

waveguiding experiments, a great convenience. Electrical conductivity simplifies electric field generation for index of refraction modulation. CaF_2(111) has been used thus far because it is inexpensive and easy to prepare. BaF_2 and other planes of CaF_2 have proven much more difficult to polish. Pitting has finally been overcome by lapping with a 1:1 solution of methanol and water containing 6 weight percent of .02μm precipitated silica, but LEED patterns still exhibit a much higher background than do those of CaF_2(111), and ZnTe films grown on such surfaces are hazy in apperance. Sapphire is very easy to polish, and we have substrates on order with both (0001) and $(11\bar{2}0)$ orientations.

We have recently succeeded in obtaining a mirror-smooth polish on CdSe(0001) using 5% Br in methanol as suggested by Strehlow.[7] A subsequent heat-cleaning under vacuum such as is used for CaF_2(111) was found insufficient to develop a LEED pattern. A .02 amp-sec bombardment with 450eV Xe^+ ions followed by a 3 minute anneal at 500°C resulted in a very sharp, low-background LEED pattern at 25eV, indicative of a high-quality, single-crystal surface which should prove to be an excellent substrate. Higher temperature annealing caused surface faceting. As LEED beam energy was increased, background intensity also increased so that diffraction spots were unobservable above 90eV. The high-quality low-voltage pattern suggests that this trend is characteris-

tic of the material and is not the result of a contaminated or disordered surface. This explains the lack of 100eV-and-over diffraction from ZnTe films whose mosaic patterns (Fig. 4) indicate to be monocrystalline. Similar preparation procedures will be tried for CdS, which has the advantage of being transparent in the visible.

E. Waveguide Coupling

Coupling to semiconductor waveguides is made difficult by their high index of refraction and by their fragility. Coupling into GaAs guides has been reported using phase grating and Ge-prism couplers[8] and cleaved ends[9]. We would prefer to avoid the first technique for preliminary waveguide evaluation because of the tedious and, therefore, costly film preparation involved, although this method shows particular promise for eventual device applications. The latter two techniques are illustrated in Fig. 5 by rays A and B, along with two variations of tapered-end couplers (rays C and D). All four of these methods have been tried in this work using 6328A^{o} light on 1μm-thick ZnTe/CaF_2(111) films, thus far without success. With the GaP-prism couplers (A), the likely cause is poor contact due to insufficient substrate flatness. B is complicated by the fact that CaF_2 cleaves on (111) while ZnTe, if it is cubic, prefers to cleave on (110).[1] Method C relies on the poorly character-

ized taper produced by the shadowing effect of the substrate support wire. An attempt was made to generate a more desirable shallow taper by angle-lapping the edge of the film (D), but the film tended to break away. Further efforts will concentrate on refining method C by introducing a mask further from the substrate to generate a more diffuse shadow and, therefore, a more shallow taper.

F. Conclusions and Program Plans

The evaporation and deposition characteristics of the ZnTe system have been well characterized during the first quarter, subject to a check on deposition rate as mentioned in Section B. This work will be repeated in the coming (final) quarter for the CdTe system and if necessary for the ZnSe and CdSe systems.

Having successfully prepared high-quality CdSe(0001) substrates, we will proceed with ZnTe, CdTe, and ternary growth on these surfaces, as well as on sapphire (0001) and $(11\bar{2}0)$. Preparation procedures will also be developed for CdS in order to permit use of visible light on a II-VI substrate.

Coupling efforts will be concentrated on the tapered coupler, using the mask technique discussed in Section E. If this is unsuccessful, phase grating couplers will be fabricated.

REFERENCE:

1. M. Aven + J. S. Prener, eds. "Physics & Chemistry of II-VI Compounds," American Elsevier, N.Y. (1967); ch.2&3.

2. W. J. Moore; "Physical Chemistry," Prentice-Hall, Englewood Cliffs, N. J. (1962); p. 217.

3. R. E. Honig + D. A. Kramer; RCA Review 30 285 (1969)

4. K. Denbigh; "The Principles of Chemical Equilibrium" University Press, Cambridge, U. K. (1963); p. 144

5. P. Goldfinger + M. Jeunehomme; Trans. Faraday Soc. 59 2851 (1963)

6. D. B. Holt; Brit. J. Appl. Phys. 17 1395 (1966)

7. W. H. Strehlow; J. Appl. Phys. 40 2928 (1969)

8. P. K. Cheo, J. M. Berak, W. Oshinsky, + J. L. Swindal; Appl. Optics 12 500 (1973)

9. R. A. Logan + F. K. Reinhart; J. Appl. Phys. 44 4172 (1973)

Table I. Substrates for II-VI Compound Waveguides

Material	Lattice Constant Match	Thermal Expansion Match	Transmits Visible Light	Electrically Conductive?	Polishing/ Cleaning Technology Established?
CaF_2	fair	poor	yes	no	yes
BaF_2	good	poor	yes	no	no
Sapphire	poor	fair	yes	no	yes
CdS	fair	good	yes	yes	no
CdSe	good	good	no	yes	yes

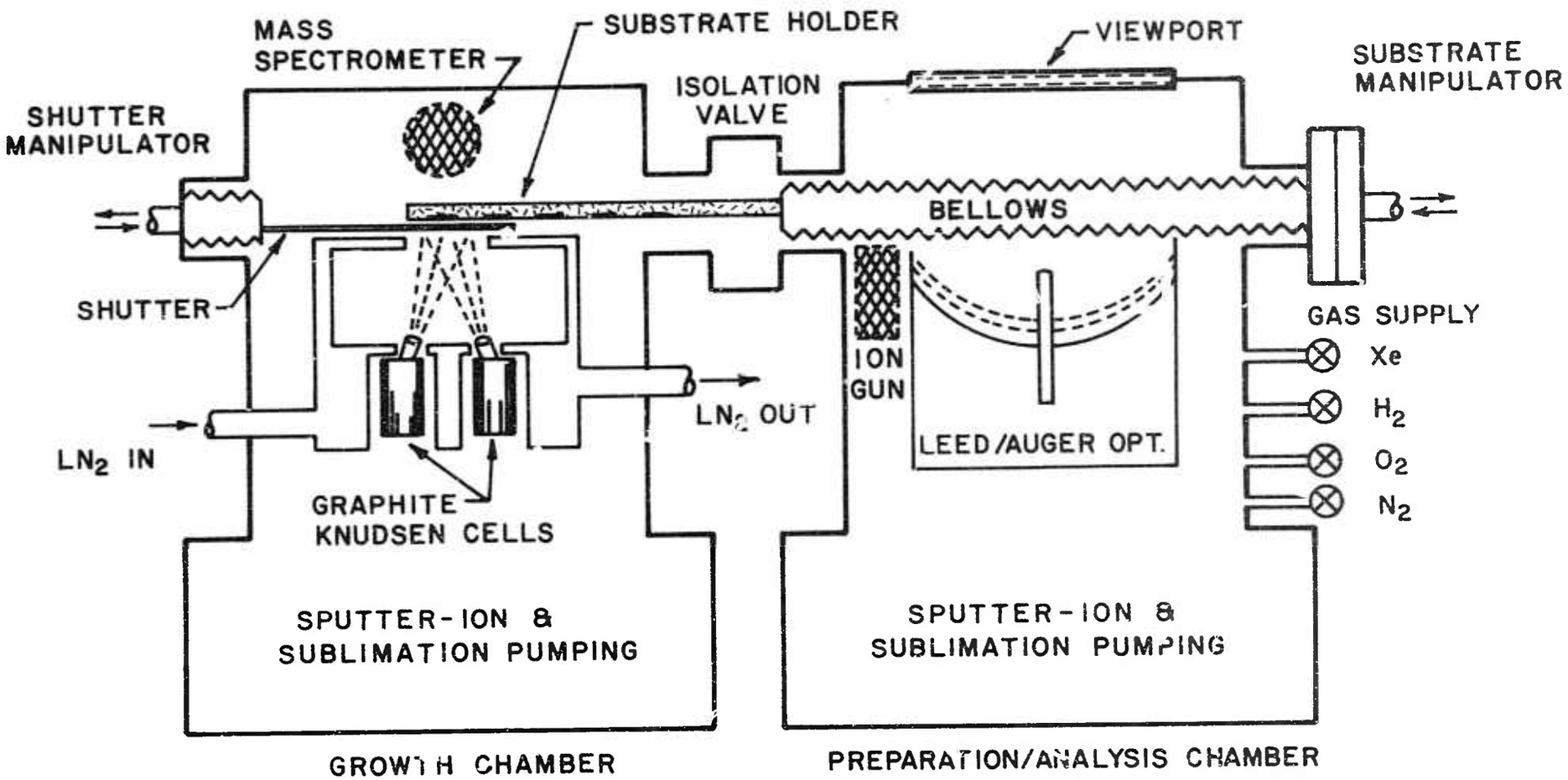

FIG. 1. SCHEMATIC OF MBE SYSTEM

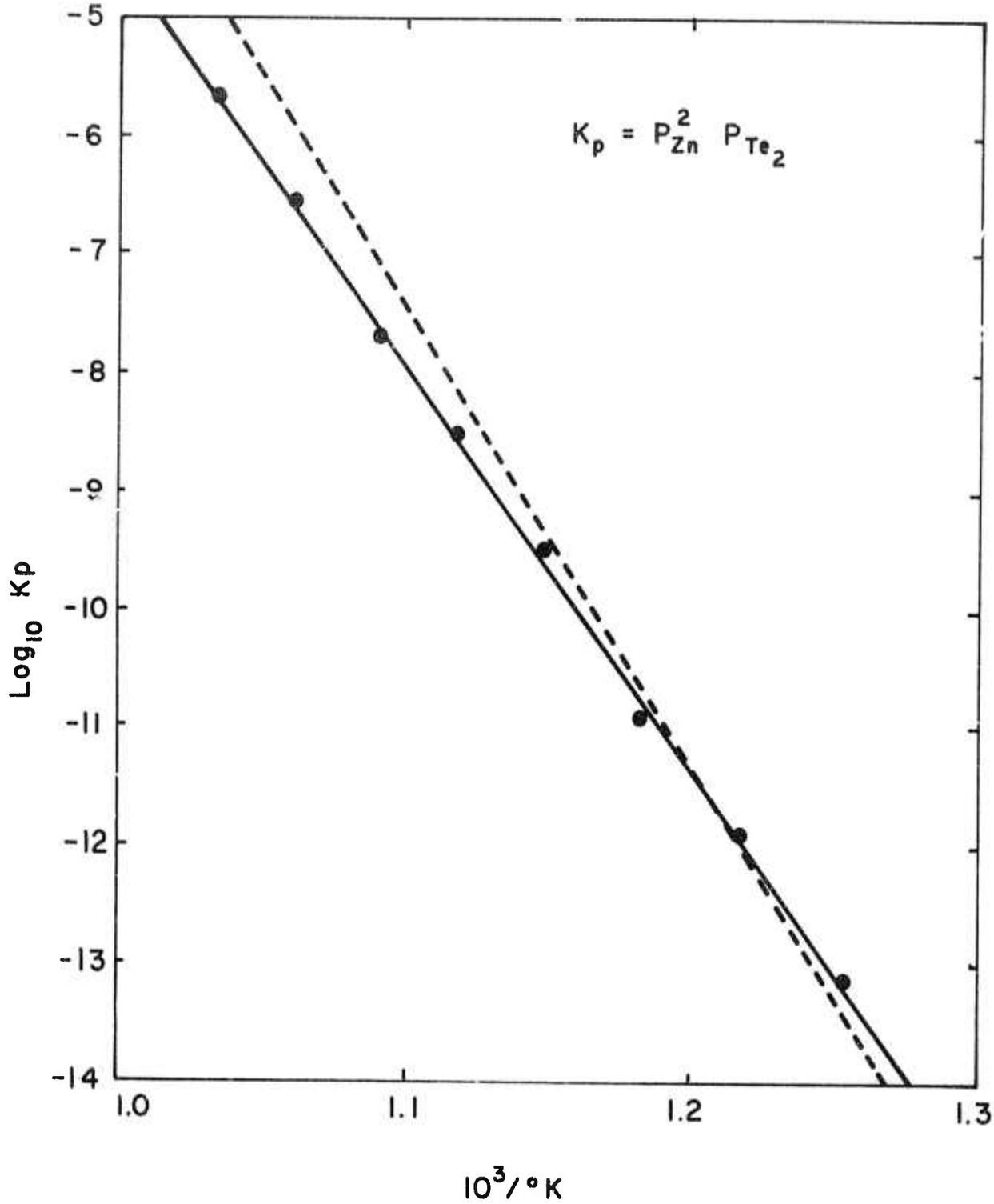

FIG. 2. EQUILIBRIUM CONSTANT FOR ZnTe EVAPORATION.
● = PRESENT WORK. --- = REF. 5.

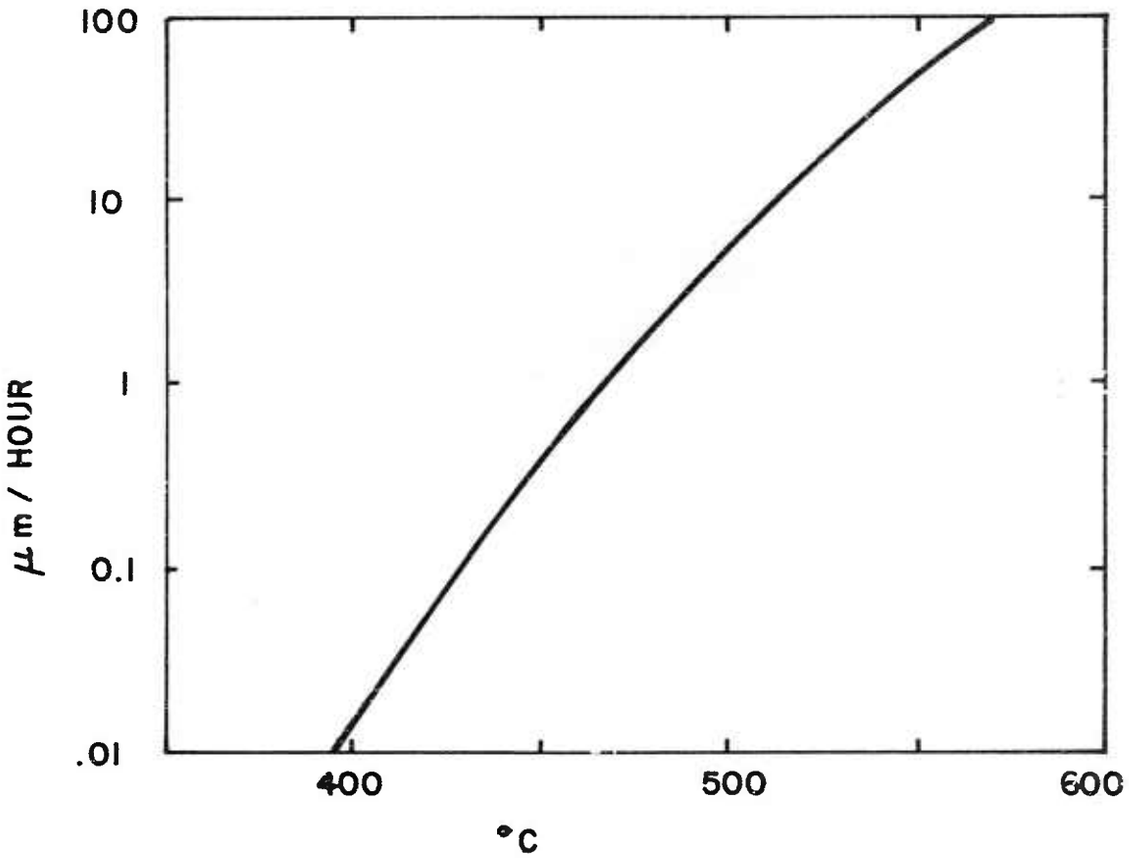

FIG. 3. EVAPORATION RATE OF ZnTe

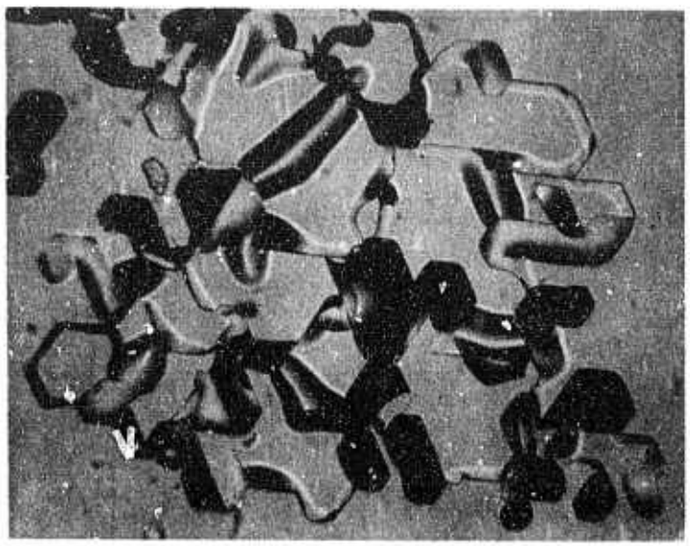

FIG. 4. 100X MICROGRAPH OF ZNTE ON CaF_2, GROWN AT 350°C.

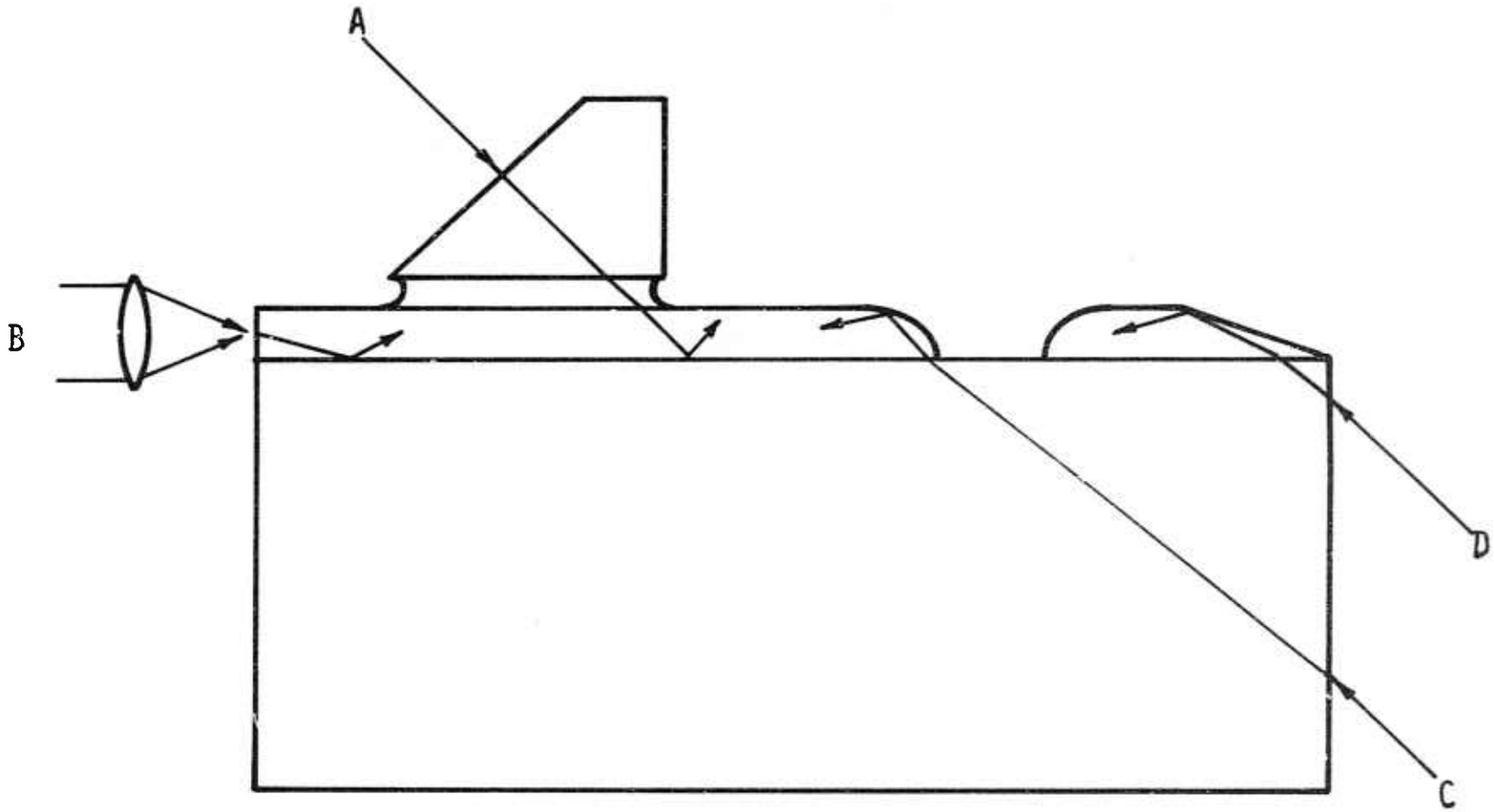

FIG. 5. VARIOUS COUPLING TECHNIQUES (SEE TEXT)