AD-767 182

STOL TACTICAL AIRCRAFT INVESTIGATION, EXTERNALLY BLOWN FLAP. VOLUME V. PART 3. STABILITY AND CONTROL DERIVATIVE ACCURACY REQUIREMENTS AND EFFECTS OF AUGMENTATION SYSTEM DESIGN

Victor H. Okumoto, et al

Rockwell International Corporation

Prepared for:

Air Force Flight Dynamics Laboratory

April 1973

DISTRIBUTED BY:

NTIS

National Technical Information Service
U. S. DEPARTMENT OF COMMERCE
5285 Port Royal Road, Springfield Va. 22151

AD 767182

AFFDL-TR-73-20
Volume V
Part III

STOL TACTICAL AIRCRAFT INVESTIGATION– EXTERNALLY BLOWN FLAP

Volume V

Flight Control Technology

Part III

Stability and Control Derivative Accuracy Requirements and Effects of Augmentation System Design

DDC
RECEIVED
AUG 24 1973
C

W. K. ELSANKER
V. H. OKUMOTO

LOS ANGELES AIRCRAFT DIVISION
ROCKWELL INTERNATIONAL CORPORATION

TECHNICAL REPORT AFFDL-TR-73-20, VOLUME V, PART III

APRIL 1973

Approved for public release; distribution unlimited.

AIR FORCE FLIGHT DYNAMICS LABORATORY
AIR FORCE SYSTEMS COMMAND
WRIGHT-PATTERSON AIR FORCE BASE, OHIO

Reproduced by
NATIONAL TECHNICAL
INFORMATION SERVICE
US Department of Commerce
Springfield, VA. 22151

200

NOTICE

When Government drawings, specifications, or other data are used for any purpose other than in connection with a definitely related Government procurement operation, the United States Government thereby incurs no responsibility nor any obligation whatsoever; and the fact that the government may have formulated, furnished, or in any way supplied the said drawings, specifications, or other data, is not to be regarded by implication or otherwise as in any manner licensing the holder or any other person or corporation, or conveying any rights or permission to manufacture, use, or sell any patented invention that may in any way be related thereto.

ACCESSION for
NTIS White Section ☑
DDC Buff Section ☐
UNANNOUNCED ☐
JUSTIFICATION .....
BY .....
DISTRIBUTION/AVAILABILITY CODES
Dist. AVAIL. and/or SPECIAL
A

Copies of this report should not be returned unless return is required by security considerations, contractual obligations, or notice on a specific document.

AIR FORCE/56780/16 August 1973 — 150

STOL TACTICAL AIRCRAFT INVESTIGATION–EXTERNALLY BLOWN FLAP

Volume V

Flight Control Technology

Part III

Stability and Control Derivative Accuracy Requirements and Effects of Augmentation System Design

W. K. ELSANKER
V. H. OKUMOTO

APRIL 1973

Approved for public release; distribution unlimited.

i ~

FOREWORD

This report was prepared for the Prototype Division of the Air Force Flight Dynamics Laboratory by the Los Angeles Aircraft Division, Rockwell International. The work was performed as part of the STOL tactical aircraft investigation program under USAF contract F33615-71-C-1760, project 643A0020. Daniel E. Fraga, AFFDL/PTA, was the Air Force program manager, and Garland S. Oates, Jr., AFFDL/PTA, was the Air Force technical manager. Marshall H. Roe was the program manager for Rockwell.

This investigation was conducted during the period from 10 June 1971 through 9 December 1972. This final report is published in six volumes and was originally published as Rockwell report NA-72-868. This report was submitted for approval on 9 December 1972.

This technical report has been reviewed and is approved.

E. J. Cross, Jr.
Lt Col, USAF
Chief, Prototype Division

Security Classification

14. KEY WORDS	LINK A ROLE	LINK A WT	LINK B ROLE	LINK B WT	LINK C ROLE	LINK C WT
STOL Transports						
Externally Blow Flaps						
Medium STOL Transport						
Stability and Control						
Augmentation Systems						

U.S. Government Printing Office 1973 — 758-435/04

Security Classification

Security Classification

DOCUMENT CONTROL DATA - R & D

(Security classification of title, body of abstract and indexing annotation must be entered when the overall report is classified)

1. ORIGINATING ACTIVITY *(Corporate author)* Los Angeles Aircraft Division Rockwell International Corporation Los Angeles International Airport, L.A., Calif., 90009	2a. REPORT SECURITY CLASSIFICATION Unclassified 2b. GROUP

3. REPORT TITLE

STOL Tactical Aircraft Investigation, Externally Blown Flap
Volume V Part 3 Stability and Control Derivative Accuracy Requirements and Effects of Augmentation System Design

4. DESCRIPTIVE NOTES *(Type of report and inclusive dates)*

Final Report (10 June 1971 to 10 December 1972)

5. AUTHOR(S) *(First name, middle initial, last name)*

William K. Elsanker
Victor H. Okumoto

6. REPORT DATE April 1973	7a. TOTAL NO. OF PAGES 200	7b. NO. OF REFS 5
8a. CONTRACT OR GRANT NO. F33615-71-C-1760 b. PROJECT NO. c. 643A - Task 0020 d.	9a. ORIGINATOR'S REPORT NUMBER(S) 9b. OTHER REPORT NO(S) *(Any other numbers that may be assigned this report)* AFFDL-TR-73-20 Volume V Part 3	

10. DISTRIBUTION STATEMENT

Approved for public release; distribution unlimited.

11. SUPPLEMENTARY NOTES	12. SPONSORING MILITARY ACTIVITY Air Force Flight Dynamics Laboratory (PTA), Wright Patterson AFB, Ohio, 45433

13. ABSTRACT

The basic objective of the work reported herein was to provide a broader technology base to support the development of a medium STOL Transport (MST) airplane. This work was limited to the application of the externally blown flap (EBF) powered lift concept.

The technology of EBF STOL aircraft has been investigated through analytical studies, wind tunnel testing, flight simulator testing, and design trade studies. The results obtained include development of methods, for the estimation of the aerodynamic characteristics of an EBF configuration, STOL performance estimation methods, safety margins for takeoff and landing, wind tunnel investigation of the effects of varying EBF system geometry parameters, configuration definition to meet MST requirements, trade data on performance and configuration requirement variations, flight control system mechanization trade data, handling qualities characteristics; piloting procedures, and effects of applying an air cushion landing system to the MST.

From an overall assessment of study results, it is concluded that the EBF concept provides a practical means of obtaining STOL performance for an MST with relatively low risk.

DD FORM 1 NOV 65 1473

Security Classification

ABSTRACT

The basic objective of the work reported herein was to provide a broader technology base to support the development of a medium STOL Transport (MST) airplane. This work was limited to the application of the externally blown flap (EBF) powered lift concept.

The technology of EBF STOL aircraft has been investigated through analytical studies, wind tunnel testing, flight simulator testing, and design trade studies. The results obtained include development of methods for the estimation of the aerodynamic characteristics of an EBF configuration, STOL performance estimation methods, safety margins for takeoff and landing, wind tunnel investigation of the effects of varying EBF system geometry parameters, configuration definition to meet MST requirements, trade data on performance and configuration requirement variations, flight control system mechanization trade data, handling qualities characteristics, piloting procedures, and effects of applying an air cushion landing system to the MST.

From an overall assessment of study results, it is concluded that the EBF concept provides a practical means of obtaining STOL performance for an MST with relatively low risk. Some improvement in EBF performance could be achieved with further development - primarily wind tunnel testing. Further work should be done on optimization of flight controls, definition of flying qualities requirements, and development of piloting procedures. Considerable work must be done in the area of structural design criteria relative to the effects of engine exhaust impingement on the wing and flap structure.

This report is arranged in six volumes:

Volume I - Configuration Definition

Volume II - Design Compendium

Volume III - Performance Methods and Takeoff and Landing Rules

Volume IV - Analysis of Wind Tunnel Data

Volume V - Flight Control Technology

- Part I - Control System Mechanization Trade Studies
- Part II - Simulation Studies/Flight Control System Validation
- Part III - Stability and Control Derivative Accuracy Requirements and Effects of Augmentation System [illegible]

Volume VI - Air Cushion Landing System Trade Study

This document, volume V-III, reports, analyzes, and summarizes the results of an aerodynamic coefficient variation study in terms of coefficient variation effects on aircraft handling qualities. The study defines the flight control systems requirements, identifies those coefficients to which the flight control systems are sensitive, the coefficient ranges, and provides a basis for determining coefficient accuracy prediction requirements in terms of conventional handling qualities requirements.

TABLE OF CONTENTS

Section		Page
I	INTRODUCTION	1
II	DISCUSSION	3
	Flying Qualities Requirements	3
	Selection of Baseline Flight Condition	3
	Selection of Coefficient Variation Ranges	5
	Technical Approach	5
	Six-Degree of-Freedom Digital Simulation Program	5
	Three-Degree-of-Freedom Linear Matrices	9
	Analytical Approaches for Definition of Augmentation Systems	9
	Root Locus Method	9
	Method of Stabilizing Spiral Mode Time Constant	9
	Determination of Augmentation Through Simultaneous Solution of Aerodynamic Coefficients	13
	Definition of Terms Applicable to Coefficient Prediction Accuracy Requirements and Flight Control System Sensitivity	13
	Flying Qualities Parameter (P)	13
	Minimum Flying Qualities Performance Level $P_{(MIN)}$	13
	Baseline Value (BL)	15
	Flying Qualities Design Margin (ΔP)	15
	General Aerodynamic Coefficient (η)	15
	Aerodynamic Coefficient Design Margin or Gain Margin (DMC)	15
	Sensitivity (SENS)	15
	Prediction Accuracy (PA)	15
	Required Prediction Accuracy (RPA)	15
	Coefficient Prediction Accuracy Requirements	16
	Required Prediction Accuracy Concept	16
	Design Margin Concept	17

Section		Page
III	STUDY RESULTS	19
	Lateral-Directional Parameter Variation Data (Unaugmented and Augmented)	19
	Rolling Moment Coefficients	20
	Yawing Moment Coefficients	36
	Side Force Coefficients	49
	Time History Data	60
	Longitudinal Parameter Variation Data (Unaugmented and Augmented)	61
	Axial Force Coefficients	65
	Normal Force Coefficients	73
	Pitching Moment Coefficients	84
	Analysis of Aircraft Capability to Achieve Stall Angle of Attack from Trim	101
	Coefficient Accuracy Requirements - Unaugmented Aircraft	103
	Lateral-Directional Axis	103
	Longitudinal Axis	108
	Coefficient Accuracy Requirements - Baseline Augmented Aircraft	113
	Lateral-Directional	113
	Longitudinal	123
IV	SUMMARY AND RECOMMENDATIONS	131
	APPENDIX I - NUMERICAL EXAMPLE FOR STABILIZING SPIRAL MODE TIME CONSTANT	136
	APPENDIX II - EXAMPLE OF SIMULTANEOUS SOLUTION OF AERODYNAMIC COEFFICIENT METHOD	137
	APPENDIX III - TRANSFER FUNCTIONS FOR PARAMETER VARIATION ANALYSIS	139
	APPENDIX IV - ANALYSIS FOR INCREASING YAW AND ROLL CONTROL EFFECTIVENESS WITH CONTROL BLENDING TECHNIQUES	164
	APPENDIX V - ANALYSIS OF AIRCRAFT CAPABILITY TO TRIM	176
	REFERENCES	183

LIST OF ILLUSTRATIONS

Figure		Page
1	Baseline Roll Augmentation System	6
2	Baseline Yaw Augmentation System	6
3	Baseline Longitudinal Axis Control and Augmentation System	6
4	Six DOF Digital Simulation Program Flow Diagram	8
5	Three DOF Lateral-Directional Matrix	10
6	Three DOF Longitudinal Matrix	11
7	Three DOF Body Axis Lateral-Directional Equations	12
8	Three DOF Body Axis Longitudinal Equations	12
9	Definition of Prediction Accuracy and FCS Sensitivity Terms	14
10	Effect of Rolling Moment Coefficient Variation on Spiral Mode Time Constant	21
11	Effect of Rolling Moment Coefficient Variation on Roll Time Constant	22
12	Effect of Rolling Moment Coefficient Variation on Dutch Roll Natural Frequency	23
13	Effect of Rolling Moment Coefficient Variation on Dutch Roll Damping	24
14	Effect of Rolling Moment Coefficient Variation on ω_ϕ/ω_{nd}	25
15	Effect of Rolling Moment Coefficient Variation on ψ_t	26
16	Effect of Rolling Moment Coefficient Variation on t_{30}	27
17	Effect of Rolling Moment Coefficient Variation on $\lvert\Delta\beta/\phi_1\rvert \times \lvert\phi/\beta\rvert_d$	28
18	Effect of Rolling Moment Coefficient Variation on $\lvert\Delta\beta_{max}/\phi_1\rvert$	29
19	Effect of Rolling Moment Coefficient Variation on ϕ_{osc}/ϕ_{av}	30
20	Roll and Yaw Control Systems with Wheel Coupling into Yaw	32
21	Roll Control and Augmentation System for L_β Variation	34
22	Yaw Control and Augmentation System for L_β Variation	36
23	Roll Control and Augmentation System for L_{δ_r} Variation	37
24	Effect of Yawing Moment Coefficient Variation on Spiral Mode Time Constant	38
25	Effect of Yawing Moment Coefficient Variation on Roll Time Constant	39
26	Effect of Yawing Moment Coefficient Variation on Dutch Roll Natural Frequency	40
27	Effect of Yawing Moment Coefficient Variation on Dutch Roll Damping	41
28	Effect of Yawing Moment Coefficient Variation on ω_ϕ/ω_{nd}	42
29	Effect of Yawing Moment Coefficient Variation on ψ_t	43

LIST OF ILLUSTRATIONS - Cont.

Figure		Page
30	Effect of Yawing Moment Coefficient Variation on t_{30}	44
31	Effect of Yawing Moment Coefficient Variation on $\lvert\Delta\beta/\phi_1\rvert \times \lvert\phi/\beta\rvert_d$	45
32	Effect of Yawing Moment Coefficient Variation on $\Delta\beta_{max}/\phi_1$	46
33	Effect of Yawing Moment Coefficient Variation on ϕ_{osc}/ϕ_{av}	47
34	Effect of Side Force Coefficient Variation on Spiral Mode Time Constant	50
35	Effect of Side Force Coefficient Variation on Roll Time Constant	51
36	Effect of Side Force Coefficient Variation on Dutch Roll Natural Frequency	52
37	Effect of Side Force Coefficient Variation on Dutch Roll Damping	53
38	Effect of Side Force Coefficient Variation on ω_ϕ/ω_{nd}	54
39	Effect of Side Force Coefficient Variation on ψ_t	55
40	Effect of Side Force Coefficient Variation on t_{30}	56
41	Effect of Side Force Coefficient Variation on $\lvert\Delta\beta/\phi_1\rvert \times \lvert\phi/\beta\rvert_d$	57
42	Effect of Side Force Coefficient Variation on $\Delta\beta_{max}/\phi_1$	58
43	Effect of Side Force Coefficient Variation on ϕ_{osc}/ϕ_{av}	59
44	Short Period Dynamics for Axial Force Coefficient Variations	66
45	Effect of Axial Force Coefficient Variation on Short Period Natural Frequency	67
46	Effect of Axial Force Coefficient Variation on Short Period Damping	68
47	Effect of Axial Force Coefficient Variation on Phugoid Natural Frequency	69
48	Effect of Axial Force Coefficient Variation on Phugoid Damping	70
49	Effect of X_V Variation on Longitudinal Roots in the S-Plane for the Unaugmented Aircraft	71
50	Longitudinal Axis Control and Augmentation System for -5 X_V Case	72
51	Effect of X_α Variation on The Longitudinal Roots in the S-Plane for the Unaugmented Aircraft	74
52	Longitudinal Axis Control and Augmentation System for -5 X_α Case	75
53	Short Period Dynamics for Normal Force Coefficient Variations	76
54	Effect of Normal Force Coefficient Variation on Short Period Natural Frequency	78

LIST OF ILLUSTRATIONS - Cont.

Figure		Page
55	Effect of Normal Force Coefficient Variation on Short Period Damping	79
56	Effect of Normal Force Coefficient Variation on Phugoid Natural Frequency	80
57	Effect of Normal Force Coefficient Variation on Phugoid Damping	81
58	Effect of Z_V Variation on the Longitudinal Roots in the S-Plane for the Unaugmented Aircraft	82
59	Effect of Z_α Variation on the Longitudinal Roots in the S-Plane for the Unaugmented Aircraft	83
60	Short Period Dynamics of Pitching Moment Coefficient Variations	85
61	Effect of Pitching Moment Coefficient Variation on Short Period Natural Frequency	86
62	Effect of Pitching Moment Coefficient Variation on Short Period Damping	87
63	Effect of Pitching Moment Coefficient Variation on Phugoid Natural Frequency	88
64	Effect of Pitching Moment Coefficient Variation on Phygoid Damping	89
65	Effect of M_V Variation on the Longitudinal Roots in the S-Plane For the Unaugmented Aircraft	91
66	Longitudinal Axis Control and Augmentation System for -10 M_V and -10 M_α Cases	92
[illegible]	Effect of M_α Variation on Longitudinal Roots in the S-Plane for the Unaugmented Aircraft	94
68	Longitudinal Axis Control and Augmentation System for M_α = -4.0 Case	95
69	Longitudinal Axis Control and Augmentation System for -5 $M_{\dot\alpha}$ Case	96
70	Effect of $M_{\dot\alpha}$ Variation on Longitudinal Roots in the S-Plane for the Unaugmented Aircraft	97
71	Effect of M_q Variation on Longitudinal Roots in the S-Plane for the Unaugmented Aircraft	98
72	Longitudinal Axis Control and Augmentation System for Zero $M_{\delta e}$ Case	99
73	Summary of Significant Parameters on Unaugmented Lateral Directional Flying Qualities	109
74	Summary of Longitudinal Coefficient Variations on Unaugmented Flying Qualities	114
75	Baseline Lateral-Directional Augmentation Effects on Coefficient Sensitivities for the Spiral Mode Time Constant	118
76	Baseline Lateral-Directional Augmentation Effects on Coefficient Sensitivities for the Roll Time Constant	119

LIST OF ILLUSTRATIONS - Cont.

Figure		Page
77	Baseline Lateral-Directional Augmentation Effects on Coefficient Sensitivities for the Dutch Roll Natural Frequency	120
78	Baseline Lateral-Directional Augmentation Effects on Coefficient Sensitivities for the Dutch Roll Damping	121
79	Baseline Pitch Augmentation Effects on Coefficient Sensitivities for Phugoid Damping	126
80	Baseline Pitch Augmentation Effects on Coefficient Sensitivities for Short Period Frequencies	127
81	Baseline Pitch Augmentation Effects on Coefficient Sensitivities for Short Period Damping	128
IV-1	Open Loop Mechanical Coupling from Yaw Control Command to Aileron	165
IV-2	Effect of Varying K_{X_p} on Heading Change in 1.0 Second	166
IV-3	Baseline Roll Control and Augmentation System with Pedal Coupling	167
IV-4	Effect of Varying $K_{X_p'}$ on Heading Angle with Pedal Step Input-Baseline Augmentation On	168
IV-5	Effect of Varying $K_{X_p'}$ on Bank Angle with Pedal Step Input-Baseline Augmentation On	169
IV-6	Effect of Varying $K_{X_p'}$ on Aileron Deflection with Pedal Step Input-Baseline Augmentation On	170
IV-7	Effect of Varying $K_{X_p'}$ on Rudder Deflection with Pedal Step Input-Baseline Augmentation On	171
IV-8	Evaluation of Rudder Step Inputs with 100 Percent Wheel Step Input for 5 L_p Case-No Augmentation	173
IV-9	Evaluation of Rudder Step Inputs with 100 Percent Wheel Step Input for 1/5 $L_{\delta a}$ Case-No Augmentation	173
IV-10	Roll and Yaw Control Systems with Wheel Coupling into Yaw	175
V-1	Evaluation of M_α Variation on Aircraft Capability to Trim with Horizontal Stabilizer	178
V-2	Evaluation of M_{δ_H} Variation on Aircraft Capability to Trim with Horizontal Stabilizer	179
V-3	Evaluation of Z_α Variation on Aircraft Capability to Trim with Horizontal Stabilizer	180
V-4	Evaluation of M_α Variation on Aircraft Capability to Trim with Full Horizontal Stabilizer and Varying Elevator	182

LIST OF TABLES

Table No.	Title	Page
I	Baseline Lateral-Directional Coefficient Values	4
II	Baseline Longitudinal Coefficient Values	4
III	Range of Coefficient Values for Parameter Variation Study	7
IV	Lateral-Directional Parameter Variation Data Symbology	20
V	Basic Aircraft Lateral-Directional Coefficient Variation Responses	62
VI	Augmented Aircraft Lateral-Directional Coefficient Variation Responses	63
VII	Summary of Longitudinal Coefficient Variation Responses Unaugmented and Augmented	64
VIII	Definition of Plotting Symbols in Presentation of Longitudinal Coefficient Variation Data	61
IX	Effect of Longitudinal Coefficient Variation on Aircraft Capability to Achieve Stall Angle of Attack from Trim	102
X	Unaugmented Lateral-Directional Sensitivities and Design Margins	104
XI	Unaugmented Aircraft Lateral - Directional Coefficients in Order to Importance to Flying Qualities Parameters	106
XII	Unaugmented Lateral-Directional Coefficients for Definition of Accuracy Requirements Versus Flying Qualities Parameters	107
XIII	Unaugmented Longitudinal Sensitivities and Design Margins	110
XIV	Longitudinal Coefficients in Order of Importance for Unaugmented Configuration on Flying Qualities Parameters	111
XV	Unaugmented Longitudinal Coefficients for Definition of Accuracy Requirements Versus Flying Qualities Parameters	112
XVI	Baseline Augmented Lateral-Directional Sensitivities and Design Margins	115
XVII	Summary of Lateral-Directional Augmentation Gains	116
XVIII	Coefficients in Order of Importance for Baseline Augmented Aircraft Responses on Flying Qualities Parameters	122
XIX	Baseline Augmented Lateral-Directional Coefficients for Definition of Accuracy Requirements Versus Flying Qualities Parameters	[illegible]
XX	Baseline Augmented Longitudinal Sensitivities and Design Margins	[illegible]
XXI	Summary of Longitudinal Augmentation Gains	[illegible]
V-I	Definition of Coefficient Notation as Used in the 6 DOF Digital Program	177
V-II	Summary of $Z\delta_H$, $M\delta_H$, Z_α and M_α Variation on Aircraft Capability to Trim with δ_H	177
V-III	Summary of M_α and $M\delta_H$ Variation on Aircraft Capability to Trim with δ_H and δ_e	177

LIST OF SYMBOLS

SYMBOL	DIMENSION	DEFINITION
b	ft.	Wing span
$\bar{c}$	ft.	Wing mean aerodynamic cord
g	ft./sec.^{2}	Acceleration due to gravity
I_X	slugs•ft.^{2}	Body X-axis moment of inertia
I_Y	slugs•ft.^{2}	Body Y-axis moment of inertia
I_Z	slugs•ft.^{2}	Body Z-axis moment of inertia
I_{XZ}	slugs•ft.^{2}	Cross moment of inertia about body X-Z axis
ℓ_H	ft.	Horizontal stabilizer arm distance
ℓ_V	ft.	Vertical tail arm distance
L_p	(sec.)$^{-1}$	Angular roll acceleration per unit roll rate
L_r	(sec.)$^{-1}$	Angular roll acceleration per unit yaw rate
L_β	(sec.)$^{-2}$	Angular roll acceleration per unit sideslip
$L_{\delta a}$	(sec.)$^{-2}$	Angular roll acceleration per unit aileron
$L_{\delta r}$	(sec.)$^{-2}$	Angular roll acceleration per unit rudder
m	slugs	Total mass of aircraft
M	lb.•ft.	Total pitching moment
M_V	rad./(ft.•sec.)	Angular pitch acceleration per unit velocity change
M_α	(sec.)$^{-2}$	Angular pitch acceleration per unit angle of attack change
$M_{\dot{\alpha}}$	(sec.)$^{-1}$	Angular pitch acceleration per unit angle of attack rate
M_q	(sec.)$^{-1}$	Angular pitch acceleration per unit pitch rate
$M_{\delta H}$	(sec.)$^{-2}$	Angular pitch acceleration per unit δ_H change
$M_{\delta e}$	(sec.)$^{-2}$	Angular pitch acceleration per unit δ_e change
n_y	g	Lateral load factor
n_z	g	Normal load factor
N_p	(sec.)$^{-1}$	Angular yaw acceleration per unit roll rate
N_r	(sec.)$^{-1}$	Angular yaw acceleration per unit yaw rate
N_β	(sec.)$^{-2}$	Angular yaw acceleration per unit sideslip
$N_{\delta a}$	(sec.)$^{-2}$	Angular yaw acceleration per unit aileron
$N_{\delta r}$	(sec.)$^{-2}$	Angular yaw acceleration per unit rudder
p	rad./sec.	Roll rate
$\dot{p}$	rad./sec.^{2}	Roll angular acceleration
q	rad./sec.	Pitch rate
$\dot{q}$	rad./sec.^{2}	Pitch angular acceleration
$\bar{q}$	lb./ft.^{2}	Dynamic pressure
r	rad./sec.	Yaw rate
$\dot{r}$	rad./sec.^{2}	Yaw angular acceleration
S	ft.^{2}	Wing area
T_{pe}	lb.	Thrust per engine
t_{30}	sec.	Time to reach 30 degrees bank angle following full roll control command
V_T	ft./sec.	Initial true velocity
V_X	ft./sec.	Body x-axis velocity component
V_Y	ft./sec.	Body y-axis velocity component
V_Z	ft./sec.	Body z-axis velocity component

LIST OF SYMBOLS - Cont.

SYMBOL	DIMENSION	DEFINITION
W	lb.	Weight of aircraft
X	lb.	Total axial force
X_c	inches	Pitch control command (column)
X_p	inches	Yaw control command (pedal)
X_w	deg.	Roll control command (wheel)
X_V	$(\text{sec.})^{-1}$	Axial acceleration coeff. per unit change in velocity
X_α	ft./sec.^2	Axial acceleration coeff. per unit change in α
X_{δ_H}	ft./sec.^2	Axial acceleration coeff. per unit change in δ_H
Y_β	$(\text{sec.})^{-1}$	Lateral acceleration normalized to velocity per unit β
Y_r		Lateral acceleration normalized to velocity per unit yaw rate
Y_{δ_r}	$(\text{sec.})^{-1}$	Lateral acceleration normalized to velocity per unit rudder
Z	lb.	Total normal force
Z_V	$(\text{sec.})^{-1}$	Normal acceleration coeff. per unit change in velocity
Z_α	ft./sec.^2	Normal acceleration coeff. per unit change in α
Z_{δ_H}	ft./sec.^2	Normal acceleration coeff. per unit change in δ_H
Z_{δ_e}	ft./sec.^2	Normal acceleration coeff. per unit change in δ_e
α	rad.	Angle of attack
$\dot{\alpha}$	rad./sec.	Rate of angle of attack
α_{STALL}	deg.	Stall angle of attack
β	rad.	Sideslip angle
γ	rad.	Glideslope angle
δ_a	%	Aileron deflection (units in per cent of full deflection)
δ_e	rad.	Elevator deflection
δ_{FLAP}	deg.	Flap deflection
δ_H	rad.	Horizontal stabilizer deflection
δ_r	rad.	Rudder deflection
ζ_d		Dutch roll damping
ζ_p		Phugoid mode damping
ζ_{sp}		Short period mode damping
θ	rad.	Pitch attitude angle
τ_R	sec.	Roll time constant
τ_S	sec.	Spiral mode time constant
ϕ	rad.	Bank angle
ψ	rad.	Heading angle
ψ_t	deg.	Heading change at 1.0 second following full yaw control command
ω_{n_d}	rad./sec.	Dutch roll natural frequency
ω_{n_p}	rad./sec.	Phugoid mode natural frequency
$\omega_{n_{sp}}$	rad./sec.	Short period mode natural frequency

LIST OF ABBREVIATIONS

DMC	Design margin of aerodynamic coefficients with respect to appropriate flying qualities parameters
DNA	Data not available
FCS	Flight control system
H.Q.	Flying qualities
LDM	Coefficient design margins are outside the parameter ranges investigated
MHQ	Minimum flying qualities requirements
NA	Not applicable
N.O.T.A.	Number of times appearing
O.O.I.	Order of importance
SENS	Sensitivity of aerodynamic coefficients variations with respect to appropriate flying qualities parameters
TED	Trailing edge down
TEU	Trailing edge up

DEFINITION OF MATRIX AERODYNAMIC COEFFICIENTS

$$L_p = \frac{\bar{q}Sb}{I_x}\frac{b}{2V}C_{l_{\left(\frac{pb}{2V}\right)}} \qquad N_p = \frac{\bar{q}Sb}{I_z}\frac{b}{2V}C_{n_{\left(\frac{pb}{2V}\right)}}$$

$$L_r = \frac{\bar{q}Sb}{I_x}\frac{b}{2V}C_{l_{\left(\frac{rb}{2V}\right)}} \qquad N_r = \frac{\bar{q}Sb}{I_z}\frac{b}{2V}C_{n_{\left(\frac{rb}{2V}\right)}} \qquad Y_r = \frac{\bar{q}S}{mV}\frac{b}{2V}C_{Y_r}$$

$$L_\beta = \frac{\bar{q}Sb}{I_x}C_{l_\beta} \qquad N_\beta = \frac{\bar{q}Sb}{I_z}C_{n_\beta} \qquad Y_\beta = \frac{\bar{q}S}{mV}C_{Y_\beta}$$

$$L_{\delta a} = \frac{\bar{q}Sb}{I_x}C_{l_{\delta a}} \qquad N_{\delta a} = \frac{\bar{q}Sb}{I_z}C_{n_{\delta a}}$$

$$L_{\delta r} = \frac{\bar{q}Sb}{I_x}C_{l_{\delta r}} \qquad N_{\delta r} = \frac{\bar{q}Sb}{I_z}C_{n_{\delta r}} \qquad Y_{\delta r} = \frac{\bar{q}S}{mV}C_{Y_{\delta r}}$$

$$M_V = \frac{2}{V}\frac{\bar{q}S\bar{c}}{I_Y}C_{m_V} \qquad Z_V = -\frac{2\bar{q}S}{mV}C_{L_V} \qquad X_V = -\frac{2\bar{q}S}{mV}C_{D_V}$$

$$M_\alpha = \frac{\bar{q}S\bar{c}}{I_Y}C_{m_\alpha} \qquad Z_\alpha = -\frac{\bar{q}S}{mV}C_{L_\alpha} \qquad X_\alpha = -\frac{\bar{q}S}{mV}C_{D_\alpha}$$

$$M_{\dot\alpha} = \frac{\bar{q}S\bar{c}}{I_Y}\frac{\bar{c}}{2V}C_{m_{\dot\alpha}}$$

$$M_q = \frac{\bar{q}S\bar{c}}{I_Y}\frac{\bar{c}}{2V}C_{m_q}$$

$$M_{\delta_H} = \frac{\bar{q}S\bar{c}}{I_Y}C_{m_{\delta_H}} \qquad Z_{\delta_H} = -\frac{\bar{q}S}{mV}C_{L_{\delta_H}} \qquad X_{\delta_H} = -\frac{\bar{q}S}{mV}C_{D_{\delta_H}}$$

$$M_{\delta_e} = \frac{\bar{q}S\bar{c}}{I_Y}C_{m_{\delta_e}} \qquad Z_{\delta_e} = -\frac{\bar{q}S}{mV}C_{L_{\delta_e}}$$

(The reverse of this page is blank)

Section I

INTRODUCTION

There are many reasons for conducting a parameter variation analysis. For the aerodynamicist it can be used as an aid in determining the accuracy with which an aerodynamic derivative must be defined, or in the design phase, it can be used to determine what effect configuration changes may have on the handling qualities of the aircraft. For the flight control engineer it can be used as an aid in designing augmentation systems by understanding how each aerodynamic derivative affects the flying qualities, and what sort of augmentation is required to provide satisfactory response characteristics with changes in the aerodynamic derivatives.

The purpose of this study included all of these to a greater or lesser degree. In particular, the objectives of this study were: (1) The identification of coefficients to which the flight control system design is sensitive and their ranges, (2) provision of a basis for determining coefficient accuracy prediction requirements in terms of the flying qualities requirements of Reference (1) and (3) definition of allowable limits on coefficient accuracy prediction requirements if possible. These objectives were to consider any flying qualities requirements deemed necessary to provide adequate piloted handling qualities. The requirements of Reference (1) and, where applicable, Reference (2) were given primary consideration.

This study was undertaken for an externally blown flap MST aircraft operating in the STOL flight regime. Variation ranges for the individual stability and control derivatives were selected to cover a spectrum broad enough to encompass typical variations encountered in the basepoint vehicle and other similar designs. They were also selected to assure that sufficient variation existed to achieve the stated study objectives.

~~(The reverse of this page is blank)~~

Section II

DISCUSSION

FLYING QUALITIES REQUIREMENTS

The Level 1 flying qualities requirements adhered to in this report are those found in Reference (1). In the presentation of the data, Level 1 requirements are indicated for the fully augmented configuration and Levels 2 or 3 where applicable for the unaugmented lateral-directional axis. In the longitudinal axis data, Level 1 requirements are used exclusively for presentation of augmented and Levels 2 IFR and 3 for the unaugmented coefficient variation data.

SELECTION OF BASELINE FLIGHT CONDITION

The baseline flight condition selected for the parameter variation study is a heavy weight, full thrust takeoff at an intermediate STOL-operation flap setting of 46 degrees. Selection of this condition as a baseline for parameter variations was based on stability considerations. At low speeds and low flap angles, the unaugmented vehicle exhibits a slight longitudinal static instability (positive M_α). As flap angles are increased, longitudinal stability increases but dutch-roll damping decreases to the point of being slightly unstable at a flap setting of 65 degrees. In order to select a baseline condition representative of both these extremes the 46-degree flap setting case was selected at the lower end of the STOL speed regime. The low end of the STOL speed regime was utilized since this represents an area in which the phugoid mode is neutrally damped.

For the lateral-directional study, initial trim was taken at velocity of 120 feet/second, angle of attack of 5.03 degrees, glideslope angle of 9.42 degrees, and initial horizontal stabilizer deflection of -4.78 degrees.

For the longitudinal coefficient analysis, steady-state values for velocity, angle of attack, glideslope angle, and horizontal stabilizer deflection following a nose down column step input from trim were used in computing longitudinal coefficients. The choice of steady state values over initial trim values was found necessary to permit correlation between time history data from the 6 DOF digital simulation program with the 3 DOF linear longitudinal matrix. Difficulty in achieving correlation with trim data resulted from the slight longitudinal static instability which exists at the trim condition selected.

Baseline lateral-directional and longitudinal coefficient values are shown in Tables I and II respectively. All aerodynamic coefficient values are for a body axis system.

Preceding page blank

TABLE I

BASELINE LATERAL-DIRECTIONAL COEFFICIENT VALUES

L_p	= -0.6554378	N_p	= 0.07033949
L_r	= 0.9967363	N_r	= -0.2321458
L_β	= -0.742025	N_β	= 0.328146
$L_{\delta a}$	= 0.0090133	$N_{\delta a}$	= 0.000183151
$L_{\delta r}$	= 0.488395	$N_{\delta r}$	= -0.554542
$(V/g)Y_\beta$	= -0.3615		
$(V/g)Y_r$	= 0.089609		
$(V/g)Y_{\delta r}$	= 0.23295		

TABLE II

BASELINE LONGITUDINAL COEFFICIENT VALUES

$\frac{Z_V}{V_o}$	= -0.002188	M_V	= 0.0006487
$\frac{Z_\alpha}{V_o}$	= -0.4752	M_α	= -0.0182
$\frac{Z_{\delta H}}{V_o}$	= -0.08115	$M_{\dot\alpha}$	= -0.31195
$\frac{Z_{\delta e}}{V_o}$	= -0.088456	M_q	= -0.63008
X_V	= -0.03287	$M_{\delta H}$	= -1.20682
X_α	= 5.891	$M_{\delta e}$	= -1.3154
$X_{\delta H}$	= -1.8316		

Baseline augmentation for both the lateral-directional and longitudinal modes were defined by root locus techniques. Block diagrams for roll, yaw, and pitch augmentation and control systems are shown in Figures 1 through 3. With these systems and the baseline aircraft all Level 1 longitudinal requirements were satisfied. Only one lateral-directional requirement was not satisfied with the baseline augmentation operative. Both the basic and augmented aircraft were incapable of achieving a heading angle change of 6 degrees within one second following a full yaw control command as required in Reference (1).

Throughout the following report, Level 1 requirements on yaw control power, ψ_t, are considered presently unattainable except in terms of increased rudder size, and as a result, the baseline flight condition used in this study, either augmented or unaugmented, does not meet this requirement. However, as a result of this study a mechanization concept has evolved for the augmented vehicle which appears to offer a partial solution to meeting this requirement on the basis of the analysis conducted thus far. This concept is more fully discussed in Appendix IV.

SELECTION OF COEFFICIENT VARIATION RANGES

Gross ranges were selected in both the lateral-directional and longitudinal parameter variation analyses to permit identification of coefficients to which the FCS is sensitive and to identify critical parameters in the STOL flight regime. Wherever practical, both positive and negative coefficient values were investigated. Gross changes for each parameter are shown in Table III.

TECHNICAL APPROACH

The following is a description of the methods used in this study to accumulate desired data and define satisfactory aircraft control systems.

SIX-DEGREE-OF-FREEDOM DIGITAL SIMULATION PROGRAM

In order to obtain time history data a 6 DOF digital simulation program was used. A flow diagram describing this program is shown in Figure 4. A computer printout of this program can be found in Reference (3). Time history data from the 6 DOF program enabled measurement of t_{30}, ψ_t, ϕ_{ox}/ϕ_{ow}, $|\Delta\phi/\phi_i| \times |\phi/\beta|_d$, and capability of the aircraft to achieve stall angle of attack from trim. The 6 DOF program was also used to verify the 3 DOF linear matrix results for small perturbations from trim, and to extract the dimensionalized lateral-directional and longitudinal aerodynamic derivatives for the baseline flight condition.

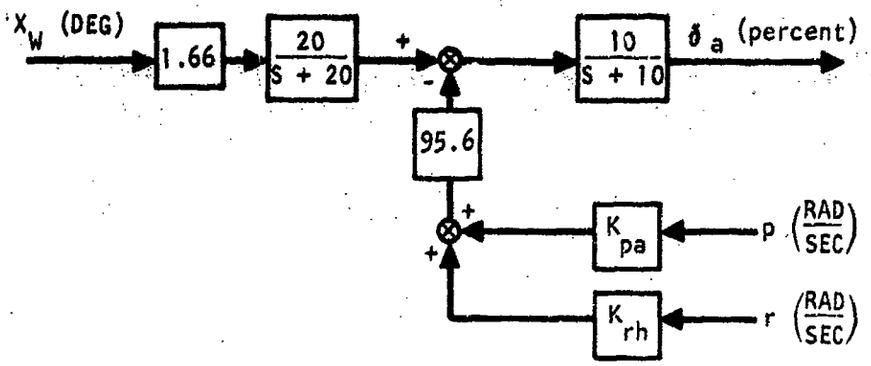

Figure 1. Baseline Roll Control and Augmentation System

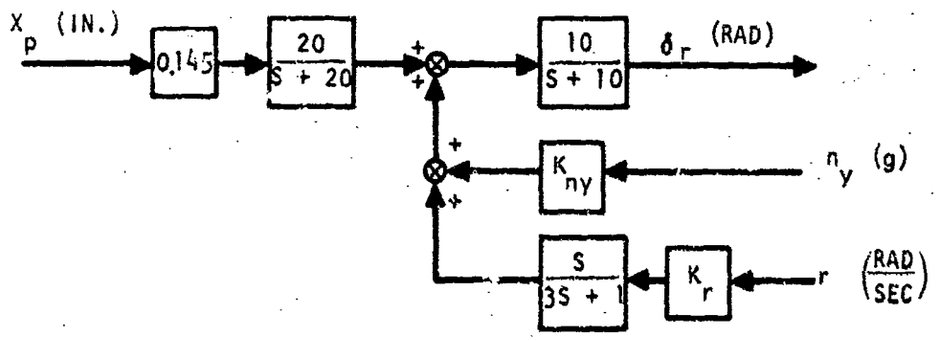

Figure 2. Baseline Yaw Control and Augmentation System

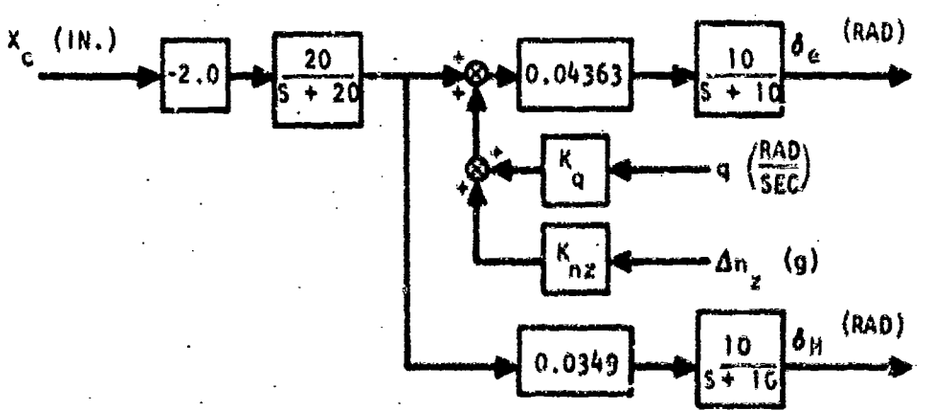

Figure 3. Baseline Longitudinal Axis Control and Augmentation System

TABLE III

RANGE OF COEFFICIENT VALUES FOR PARAMETER VARIATION STUDY

COEFFICIENT	LOWER LIMIT	BASELINE	UPPER LIMIT
L_p	-3.2770	-0.6554	-0.1311
L_r	0.1993	0.9967	4.9835
L_β	-3.710	-0.7420	2.226
$L_{\delta a}$	0.001803	0.009013	0.0451
$L_{\delta r}$	-1.4652	0.4884	2.442
N_p	-0.3517	0.07034	0.3517
N_r	-1.1605	0.2321	-0.04642
N_β	0.06562	0.3281	1.6405
$N_{\delta a}$	-0.0005496	0.0001832	0.000916
$N_{\delta r}$	-2.7725	-0.5545	-0.1109
Z_v	-2.768	-0.2768	0.0
Z_α	-300.540	-60.108	0.0
$Z_{\delta H}$	-51.325	-10.265	0.0
$Z_{\delta e}$	-55.944	-11.1888	0.0
X_v	-0.3287	-0.03287	0.1644
X_α	-29.455	5.891	29.455
$X_{\delta H}$	-9.158	-1.8316	0.0
M_v	-0.006487	0.0006487	0.006487
M_α	-4.0	-0.0182	0.182
$M_{\dot\alpha}$	-1.5598	-0.31195	1.5598
M_q	-6.3008	-0.63008	0.0
$M_{\delta H}$	-6.034	-1.2068	0.0
$M_{\delta e}$	-6.577	-1.3154	0.0
$(V/g)Y_\beta$	-1.810	-0.3615	-0.0722
$(V/g)Y_{\delta r}$	0.0466	+0.3330	1.165

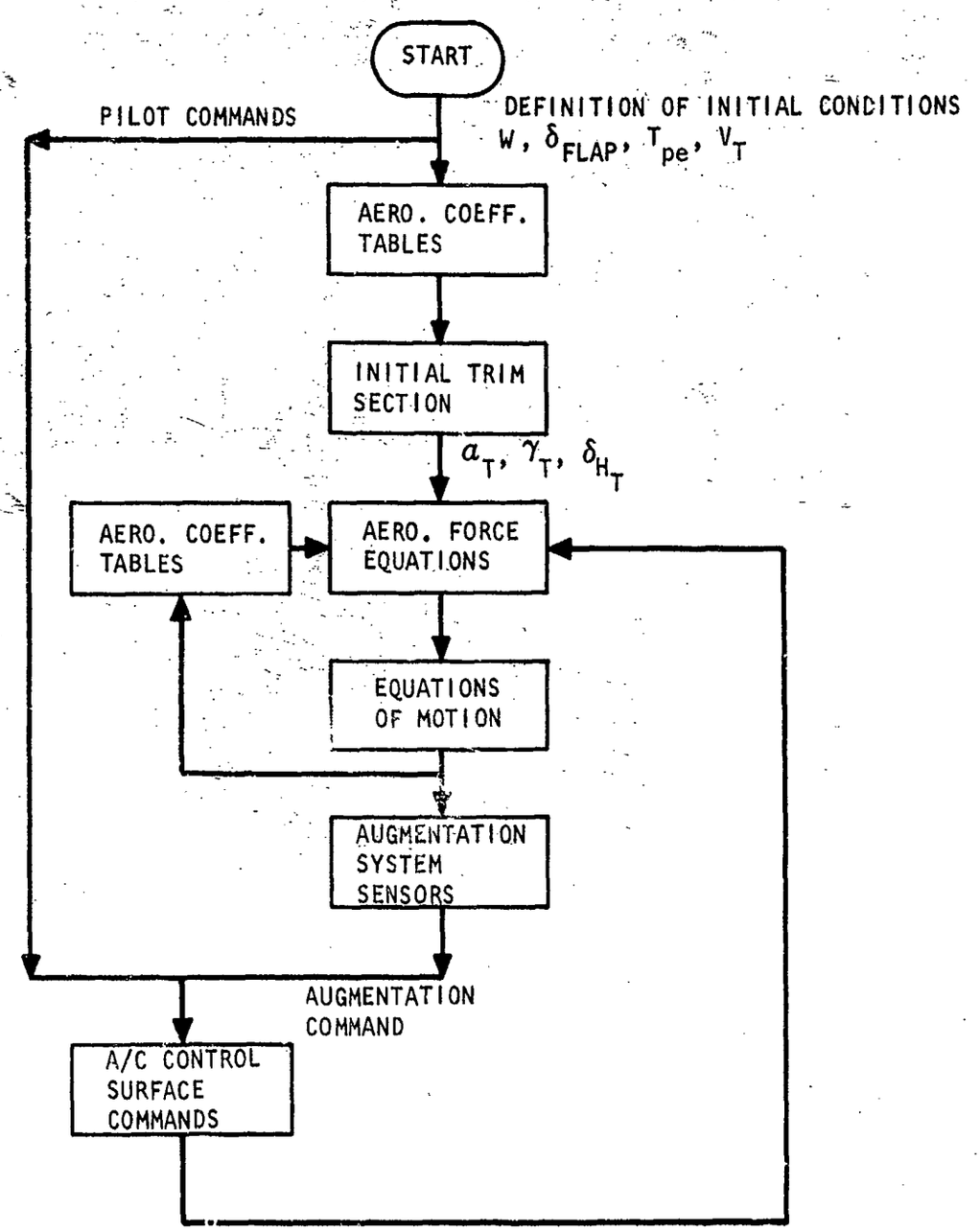

Figure 4. 6 DOF Digital Simulation Program Flow Diagram

THREE-DEGREE-OF-FREEDOM LINEAR MATRICES

Two 3 DOF linear matrices were developed for computing lateral-directional and longitudinal basic and augmented aircraft transfer functions. The small angle approximations utilized for these matrices were defined for low speed flight and give excellent correlation with small perturbation angles. Correlation of the 6 DOF digital simulation program with the 3 DOF lateral-directional matrix was shown for the damped dutch roll frequency, damping ratio, roll time constant and spiral mode time constant, and with the 3 DOF longitudinal matrix for damped phugoid frequency, phugoid damping, and short period time constant.

Data obtained from the two 3 DOF linear matrices were $\omega_{n_{sp}}$, ω_{n_p}, ζ_p, τ_s, τ_R, ω_{n_d}, ζ_d, ζ_{sp}, and ω_ϕ/ω_{n_d}. Both matrices were also utilized in defining augmentation systems for the parameter variation study. The 3 DOF lateral-directional matrix is shown in Figure 5 and the 3 DOF longitudinal matrix in Figure 6. The 3 DOF lateral-directional and longitudinal force and moment equations are shown in Figures 7 and 8.

ANALYTICAL APPROACHES FOR DEFINITION OF AUGMENTATION SYSTEMS

Root Locus Method

Root locus methods were used in defining both the lateral-directional and longitudinal baseline augmentation systems.

For coefficient variations with the augmented aircraft, the root locus method was especially useful in the longitudinal mode analysis where augmentation involved only one control surface. In the lateral-directional mode where two control surfaces are augmented, the rudder and the ailerons, root locus techniques become time consuming and when applicable a more practical approach was synthesized. Complete analysis of this mode using root loci techniques is much more difficult to conduct than the longitudinal mode because of the inter-axis coupling between the roll and yaw augmentation systems. In general, a number of different methods for defining augmentation systems were pursued in the lateral-directional parameter variation analysis.

Method of Stabilizing Spiral Mode Time Constant

Generally, it is desirable to have a spiral mode time constant that is very large ($1/\tau_s \simeq 0.0$). If we arbitrarily set $1/\tau_s$ to zero, then the denominator of the lateral-directional transfer function takes the form: $s\,(s + 1/\tau_R)\,(s^2 + (2\zeta_d\omega_{n_d})s + \omega_{n_d}^2)$. We note here that the term $1/\tau_s$ is zero. This fact can be utilized along with the linear 3 DOF lateral-directional matrix to obtain an equation that can be solved for a feedback gain that will make $1/\tau_s$ approximately zero. An appropriate gain

$$
\begin{bmatrix}
A_{11} & A_{12} & A_{13} & 0 & A_{15} & A_{16} \\
A_{21} & A_{22} & A_{23} & 0 & A_{25} & A_{26} \\
A_{31} & A_{32} & A_{33} & A_{34} & 0 & 0 \\
0 & A_{42} & A_{43} & A_{44} & 0 & A_{46} \\
A_{51} & A_{52} & A_{53} & 0 & A_{55} & 0 \\
A_{61} & A_{62} & A_{63} & A_{64} & 0 & A_{66}
\end{bmatrix}
\begin{bmatrix}
\phi \\ r \\ \beta \\ n_y \\ \delta_a \\ \delta_r
\end{bmatrix}
=
\begin{bmatrix}
0 \\ 0 \\ 0 \\ 0 \\ 332 \\ 0
\end{bmatrix}
X_w
$$

$$A_{11} = S^2 - L_p S$$

$$A_{12} = -\left(\sin\theta + \frac{I_{xz}}{I_x}\right) S + (L_p \sin\theta - L_r)$$

$$A_{13} = -L_\beta$$

$$A_{15} = -L_{\delta_a}$$

$$A_{16} = -L_{\delta_r}$$

$$A_{21} = -\frac{I_{xz}}{I_z} S^2 - N_p S$$

$$A_{22} = \left(\frac{I_{xz}}{I_z} \sin\theta + 1.0\right) S + (N_p \sin\theta - N_r)$$

$$A_{23} = -N_\beta$$

$$A_{25} = -N_{\delta_a}$$

$$A_{26} = -N_{\delta_r}$$

$$A_{31} = -\alpha S - \frac{g}{v}$$

$$A_{32} = 1.0$$

$$A_{33} = S$$

$$A_{34} = -\frac{g}{v}$$

$$A_{42} = -\frac{v}{g} Y_r$$

$$A_{43} = -\frac{v}{g} Y_\beta$$

$$A_{44} = 1.0$$

$$A_{46} = -\frac{v}{g} Y_{\delta_r}$$

$$A_{51} = (956S^2 + 19120S) K_{pa}$$

$$A_{52} = (956S + 19120)(K_{rh} - K_{pa} \sin\theta)$$

$$A_{53} = (956S + 19120) K_\beta$$

$$A_{55} = S^2 + 30S + 200$$

$$A_{61} = -(30S^2 + 610S + 200) K_{pr}$$

$$A_{62} = -(10S^2 + 200S) K_r$$

$$A_{63} = -(30S^2 + 610S + 200) K_{\beta_r}$$

$$A_{64} = -(30S^2 + 610S + 200) K_{ny}$$

$$A_{66} = 3S^3 + 91S^2 + 630S + 200$$

Figure 5. 3 DOF Lateral-Directional Matrix With Augmentation

$$
\begin{bmatrix}
A_{11} & A_{12} & A_{13} & 0 & 0 & A_{16} \\
A_{21} & A_{22} & A_{23} & 0 & A_{25} & A_{26} \\
A_{31} & A_{32} & A_{33} & 0 & A_{35} & A_{36} \\
0 & A_{42} & A_{43} & A_{44} & 0 & 0 \\
0 & A_{52} & A_{53} & A_{54} & A_{55} & 0 \\
0 & 0 & A_{63} & A_{64} & 0 & A_{66}
\end{bmatrix}
\begin{bmatrix}
\Delta v \\ \Delta\alpha \\ \Delta\theta \\ \Delta n_z \\ \Delta\delta_e \\ \Delta\delta_H
\end{bmatrix}
=
\begin{bmatrix}
0 \\ 0 \\ 0 \\ 0 \\ -17.452 \\ -13.96
\end{bmatrix}
\Delta X_c
$$

$A_{11} = S - X_v$

$A_{12} = (-V \sin\alpha)\, S - X_\alpha$

$A_{13} = (V \sin\alpha)\, S + g$

$A_{16} = -X_{\delta_H}$

$A_{21} = \frac{1}{v}\,(\sin\alpha\, S - Z_v)$

$A_{22} = S - \frac{Z_\alpha}{V}$

$A_{23} = \frac{1}{V}\,(-V_x S + g \sin\theta)$

$A_{25} = -\frac{Z_{\delta e}}{V}$

$A_{26} = -\frac{Z_{\delta_H}}{V}$

$A_{31} = -M_V$

$A_{32} = -M_{\dot\alpha}\, S - M_\alpha$

$A_{33} = S^2 - M_q S$

$A_{35} = -M_{\delta_e}$

$A_{36} = -M_{\delta_H}$

$A_{42} = S$

$A_{43} = -S$

$A_{44} = \frac{g}{v}$

$A_{52} = -0.4363\,(S + 20)\, K_\alpha$

$A_{53} = -0.4363\,[K_q S^2 + (20\, K_q + K_\theta)\, S + 20\, K_\theta]$

$A_{54} = -0.4363\,(S + 20)\, K_{n_z}$

$A_{55} = S^2 + 30S + 200$

$A_{63} = -0.349\,(S^2 + 20S)\, K_q'$

$A_{64} = -0.349\,(S + 20)\, K_{n_z}'$

$A_{66} = S^2 + 30S + 200$

Figure 6. 3 DOF Longitudinal Matrix With Augmentation

ROLLING MOMENT (+ RIGHT)

$$\dot{p} - \dot{r}\frac{I_{xz}}{I_x} = L_\beta \beta + L_p p + L_r r + L_{\delta a}\delta a + L_{\delta r}\delta r$$

YAWING MOMENT (+ NOSE RIGHT)

$$\dot{r} - \dot{p}\frac{I_{xz}}{I_z} = N_\beta \beta + N_p p + N_r r + N_{\delta a}\delta a + N_{\delta r}\delta r$$

SIDE FORCE (+ RIGHT)

$$\frac{\dot{V}_Y}{V_T} - \frac{V_z}{V_T}p + \frac{V_x}{V_T}r - \frac{g}{V_T}\cos\theta_T \sin\phi = Y_\beta \beta + Y_r r + Y_{\delta r}\delta r$$

Figure 7. 3 DOF Body Axis Lateral-Directional Equations

AXIAL FORCE (+ FORWARD)

$$\Delta\dot{V}_x + \Delta(V_z q) + g \sin\Delta\theta = X_V \Delta V + X_\alpha \Delta\alpha + X_{\delta_H}\Delta\delta_H$$

NORMAL FORCE (+ DOWN)

$$\Delta\dot{V}_z - \Delta(V_x q) - g\cos\Delta\theta = Z_V \Delta V + Z_\alpha \Delta\alpha + Z_{\delta_H}\Delta\delta_H + Z_{\delta e}\delta e$$

PITCHING MOMENT (+ UP)

$$\Delta\dot{q} = M_V \Delta V + M_\alpha \Delta\alpha + M_{\dot{\alpha}}\dot{\alpha} + M_q q + M_{\delta_H}\Delta\delta_H + M_{\delta e}\delta e$$

Figure 8. 3 DOF Body Axis Longitudinal Equations

equation can be established by taking the determinant of the constant terms for the augmented version of Figure 5, and setting it equal to zero. A numerical example of this technique is given in Appendix I of this report.

Determination of Augmentation Through Simultaneous Solution of Aerodynamic Coefficients

Once a baseline augmentation system has been defined, a simpler method of determining a satisfactory augmentation system than root locus analysis is through simultaneous solution of aerodynamic coefficients. In essence, this method utilizes the fact that baseline augmentation provides satisfactory responses for the baseline aircraft. Whenever a yawing moment or rolling moment coefficient is varied, compensation is provided by adding augmentation to both the roll and yaw augmentation systems so that the dynamic response to varied coefficients with augmentation is effectively the same as the baseline. A numerical example of this technique is given in Appendix II of this report.

DEFINITION OF TERMS APPLICABLE TO COEFFICIENT PREDICTION ACCURACY REQUIREMENTS AND FLIGHT CONTROL SYSTEM SENSITIVITY

In order to realize study results sufficiently general to permit comparison of these data with those of other flight conditions and even other STOL configurations, the data were plotted in a normalized manner with respect to the aerodynamic coefficients. Additionally, a number of terms were defined in relation to the plotted data which permit identification of design guides for coefficient prediction techniques and definition of coefficient and FCS sensitivities. These terms are identified for the general case in Figure 9.

Flying Qualities Parameter (P)

Any of the flying qualities parameters analyzed in this study, such as τ_R, $1/\tau_s$, ζ_{sp}, ω_{nd}, ϕ_{osc}/ϕ_{av}, etc.

Minimum Flying Qualities Performance Level $P_{(MQ)}$

This parameter can be either Level 1, 2, or 3 of Reference (1) and is expressed in the same units as the flying qualities parameter being analyzed. It can also be selected as a desired design goal, including but not limited to the requirements of Reference (1).

Baseline Value (BL)

Used as a subscript this refers to the baseline augmented or unaugmented value of either the flying qualities parameter or an aerodynamic coefficient.

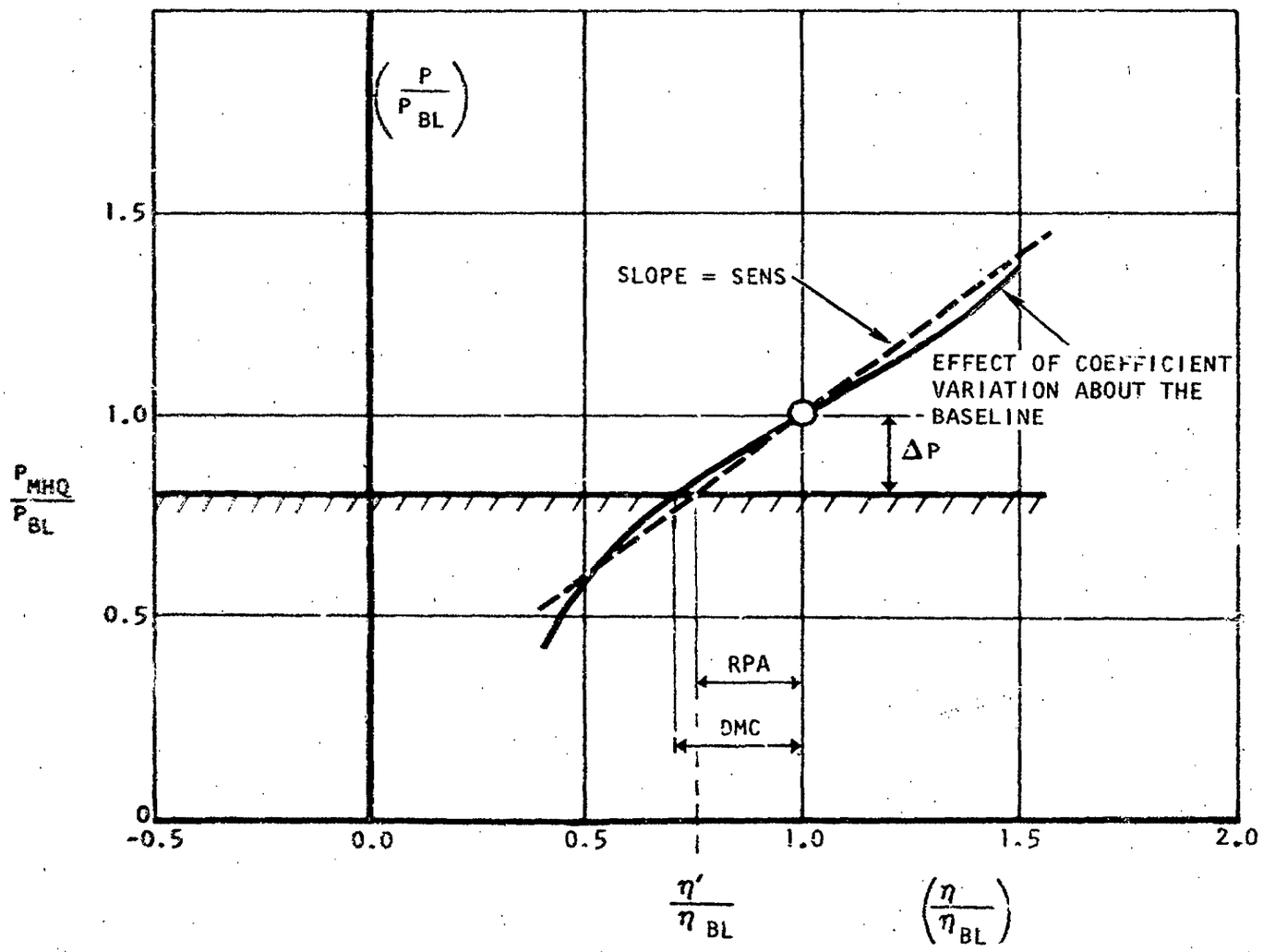

Figure 9. Definition of Prediction Accuracy and FCS Sensitivity Terms

Flying Qualities Design Margin (ΔP)

The baseline flying qualities parameter (P_{BL}) minus the minimum flying qualities requirement (P_{MHQ}) divided by P_{BL}. It defines the position of the baseline configuration level with respect to an appropriate H.Q. requirement.

General Aerodynamic Coefficient (η)

This can be any dimensionalized force or moment aerodynamic coefficient such as M_q, M_v, Z_α, L_p, N_β, $Y_{\delta r}$, etc.

Aerodynamic Coefficient Design Margin or Gain Margin (DMC)

This parameter is the baseline coefficient value minus the coefficient value at which the flying qualities (P) meets the minimum flying qualities requirement (MHQ) divided by the baseline coefficient. It defines the direction of variation occurring in a given coefficient and represents the margin of the baseline coefficient above or below a given MHQ requirement. In an augmentation loop this parameter becomes a function of some gain or gain combination. In this case it is referred to as a gain margin.

Sensitivity (SENS)

This parameter defines the rate of change of the normalized H.Q. parameter under study with respect to the normalized baseline coefficient being varied. The sign indicates the direction of the sensitivity about the baseline point. Typically it represents the average slope of a ± 50 percent coefficient variation about the baseline value.

Prediction Accuracy (PA)

This parameter represents the actual aerodynamic coefficient prediction accuracy and varies with the methods utilized for predicting coefficient values as well as the type of coefficient. The guideline presented here permits defining a coefficient value which yields a design margin (DMC) equal to PA and minimizes over or under design while still assuring that the minimum performance level will be met.

Required Prediction Accuracy (RPA)

This parameter as shown in Figure 9 represents a linearized predicted accuracy required to meet the desired MHQ.

$$RPA = \frac{\eta_{BL} - \eta'}{\eta_{BL}}$$

For a given baseline airplane configuration setting the RPA equal to the PA for a given coefficient provides assurance that minimum handling qualities parameters will be satisfied.

COEFFICIENT PREDICTION ACCURACY REQUIREMENTS

Examination of the generalized case shown in Figure 9 indicates that coefficient prediction accuracy requirements expressed in terms of H.Q. requirements depend not only on the sensitivity of H.Q. parameters to coefficient values but also on the predicted H.Q. parameter value for the baseline case in relation to the minimum performance level desired.

Thus it follows, that over or under design in terms of H.Q. parameters can be minimized if realistic guidelines can be determined which assure desired flying qualities performance levels and take into account coefficient prediction accuracies. The guidelines presented here provide this assurance.

As the data of Figure 9 indicated, a linear relationship can be defined which closely approximates the effect on flying qualities parameters due to variations in aerodynamic coefficients. For the general case shown this can be expressed by:

$$\Delta P = \frac{P_{BL} - P_{MHQ}}{P_{BL}} = \pm SENS_{\eta}\left[\frac{\eta_{BL} - \eta'}{\eta_{BL}}\right] = \pm SENS_{\eta}(RPA)$$

This equation defines the flying qualities design margin in terms of its sensitivity and the predicted accuracy of the coefficient. The sign associated with the right hand side of this equation is taken as positive if the aerodynamic coefficient is positive. For negative coefficients the sign is negative. As is typical of linear representations for non-linear functions, this equation yields the most accurate results for small increments about a basepoint. It also provides very good results for parameter variations of 100 percent or more if the sensitivities utilized for these computations are obtained directly from the data contained in this report at the predicted accuracy.

The flexibility of this relation suggests two possible approaches for relating coefficient prediction accuracies to flying qualities. These are described below.

Required Prediction Accuracy Concept

For the general case in which the prediction accuracy requirements are to be defined, this equation is used in the following form. In this form the sensitivity, the baseline parameter value, and the minimum flying qualities requrement are used to define coefficient accuracies which must be achieved to satisfy the flying qualities requirement.

$$RPA = \frac{1}{SENS_{\eta}}\left[\frac{P_{BL} - P_{MHQ}}{P_{BL}}\right]$$

For the specific case, such as that of finding the prediction accuracy requirement for N_β and L_p in terms of $|\Delta\beta/\phi_1|$ and τ_R respectively, this equation becomes,

$$RPA_{N_\beta} = \frac{1}{SENS_{N_\beta}} \frac{(\Delta\beta/\phi_1)_{BL} - (\Delta\beta/\phi_1)_{MHQ}}{(\Delta\beta/\phi_1)_{BL}}$$

$$RPA_{L_p} = \frac{1}{SENS_{L_p}} \frac{(\tau_R)_{BL} - (\tau_R)_{MHQ}}{(\tau_R)_{BL}}$$

Expressed in this form, the required prediction accuracy can be determined for the more critical coefficients and flying qualities. These are compared with anticipated coefficient prediction accuracies to determine areas where the minimum flying qualities may not be achieved. A situation of this type could occur if the baseline were selected so that this equation yields an accuracy requirement of 20 percent but the anticipated prediction accuracy of the technique used to derive the coefficient of interest is only 50 percent.

This guideline is most useful for refining a given configuration from its baseline value.

Design Margin Concept

A more direct approach and one which should certainly prove more useful in defining other but similar baseline STOL configurations is obtained by solving for the required design margin.

$$\Delta P = SENS_\eta \left[\quad PA \quad \right]$$

Expressed in this manner the equation defines the flying qualities design margin which should be maintained to satisfy a given coefficient prediction accuracy. The independent variables of this equation are the sensitivity of the flying qualities parameter to this coefficient and the actual prediction accuracy. Since coefficient prediction accuracies vary with the methods used in their prediction and the type of coefficient, initial baseline coefficients (or augmentation systems) can be defined which yield flying quality margins adequate to assure satisfactory operation. For the specific cases of N_β and L_p this approach yields equations in the following form, where PAN_β and PAL_p are anticipated

derivation accuracies for these coefficients.

$$\frac{\left(\frac{\Delta\beta}{\phi_1}\right)_{BL} - \left(\frac{\Delta\beta}{\phi_1}\right)_{MHQ}}{\left(\frac{\Delta\beta}{\phi_1}\right)_{BL}} = SENS_{N_\beta}(PA)_{N_\beta}$$

$$\frac{(\Delta T_R)_{BL} - (\Delta T_R)_{MHQ}}{(\Delta T_R)_{BL}} = SENS_{L_p}(PA)_{L_p}$$

This approach is most useful in defining design margins for flying qualities parameters which should be maintained for the more critical coefficients.

Section III

STUDY RESULTS

All of the major aerodynamic coefficients were varied in the six-degree-of-freedom MST model. This section identifies the results of these parameter variations in terms of their effects on flying qualities requirements, control systems sensitivities, and coefficient prediction accuracy requirements.

To facilitate use of these data by the reader interested in only a limited number of coefficients, the data are grouped in terms of their equations. For instance, to find the effect of variations in Z_α one would go to the Longitudinal Parameter Variation Data Section. This section discusses axial force, normal force and pitching moment coefficients. The results for variations in Z_α will be found in the subsection entitled Normal Force Coefficients.

LATERAL-DIRECTIONAL PARAMETER VARIATION DATA

The maximum and minimum coefficient range selections in the following data represent gross changes. These were selected to permit investigation of two separate and distinct areas. The first, that of determining flight control system sensitivity, and the second, to assist in establishing coefficient accuracy prediction requirements. In terms of coefficient variation magnitudes these two areas at times vary significantly, and as a result, the gross variation ranges selected are based on the objective requiring the largest coefficient variation.

In plotting the lateral-directional response of the aircraft, an additional response requirement other than those specified in Reference (1) was analyzed. Experience has shown that ω_ϕ/ω_n as previously specified in Reference (2) is a useful design guide in predicting the oscillatory behavior of the dutch roll response following a roll control command.

In plotting the spiral mode time constant response, $1/\tau_s$ was plotted to avoid the necessity of plotting infinite values for τ_s. The reason that $1/\tau s$ was plotted rather than T_2 (time to double amplitude) as defined in Reference 1, is that $1/\tau s$ was available directly from the 3 DOF transfer functions. Because of the large number of data points taken during this study it was more convenient to convert the requirements on T_2 into requirements for $1/\tau s$ and plot the values for $1/\tau s$. The time to double amplitude is related to the spiral mode time constant by the relation $T_2 = \tau s \ln 2.0$. Definitions of the symbols used in plotting the lateral-directional parameter variation data are shown in Table IV.

TABLE IV

Lateral-Directional Parameter Variation Data Symbology

○ Basic A/C, Baseline, L_p, N_p

□ Basic A/C, L_r, N_r, Y_r

◇ Basic A/C, L_β, N_β, Y_β

◁ Basic A/C, $L_{\delta a}$, $N_{\delta a}$

▷ Basic A/C, $L_{\delta r}$, $N_{\delta r}$, $Y_{\delta r}$

Augmented A/C, Baseline, L_p, N_p

Augmented A/C, L_r, N_r, Y_r

Augmented A/C, L_β, N_β, Y_β

Augmented A/C, $L_{\delta a}$, $N_{\delta a}$

Augmented A/C, $L_{\delta r}$, $N_{\delta r}$, $Y_{\delta r}$

ROLLING MOMENT COEFFICIENTS

The effects of variation of the rolling moment coefficients are plotted in Figures 10 through 16 for τ_s, τ_R, ω_{nd}, ζ_d, ω_ϕ/ω_{n_d}, ψ_t, and t_{30}. The effects of variation in the rolling moment coefficients on $|\Delta\beta_{max}/\phi_1| \times |\phi/\beta|_d$, $|\Delta\beta_{max}/\phi_1|$ and ϕ_{osc}/ϕ_{max} are shown in Figures 17 through 19. In all cases, both the basic aircraft and augmented aircraft responses are plotted. If baseline augmentation is insufficient to provide Level 1 response characteristics, revised augmentation responses are plotted instead. ϕ/X_w transfer functions for the basic, baseline augmented, and revised augmented aircraft are given in Appendix III for all rolling moment coefficient variations analyzed.

Lp; Baseline Value = -0.655

Variation in Lp, the roll damping term, indicates primary influence of the coefficient upon the dutch roll damping, roll time constant, and roll control effectiveness. Increasing negative values of Lp tend to increase ζ_d, whereas, small values may cause ζ_d to go unstable. Although large values of Lp improve dutch roll damping and roll time constant responses, they tend to reduce roll control effectiveness. Values of Lp greater than 3.65 times the baseline value fail to meet Level 1 requirements on t_{30} for the unaugmented aircraft. Values of Lp less than 0.25 times the baseline have an unstable dutch roll damping, and values less than 0.65 times the baseline fail Level 1 requirements on the roll time constant.

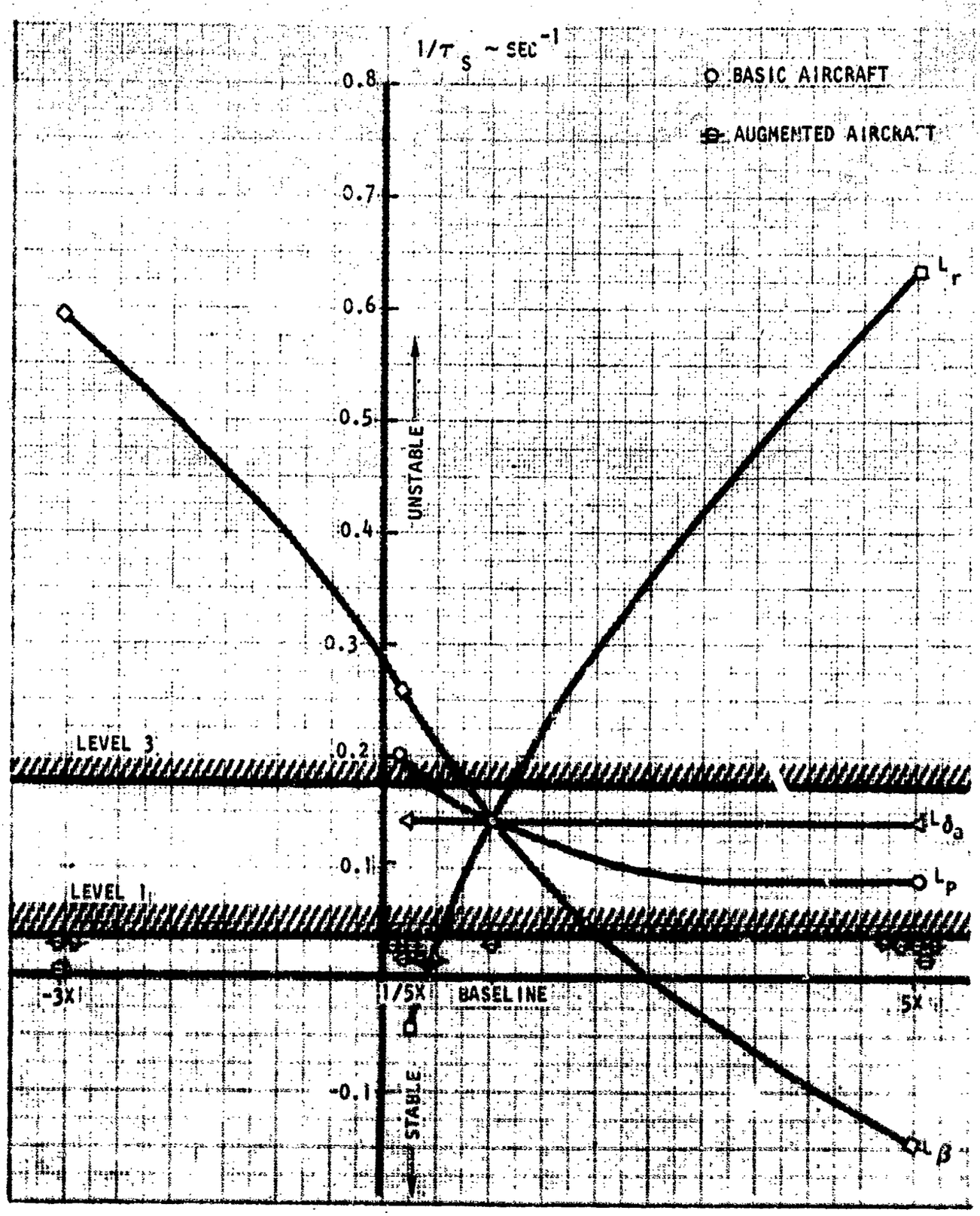

Figure 10. Effect of Rolling Moment Coefficient Variation on Spiral Mode Time Constant

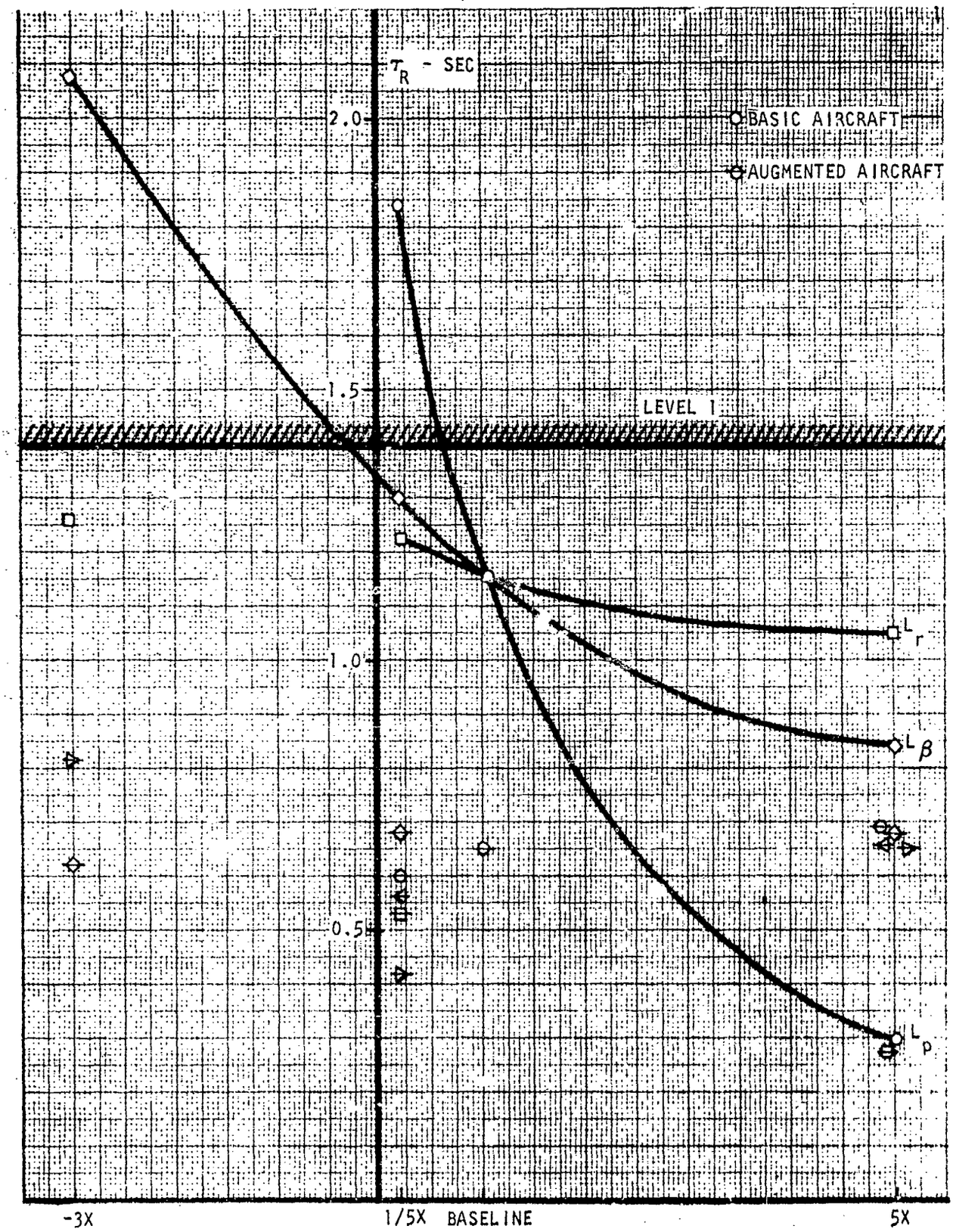

Figure 11. Effect of Rolling Moment Coefficient Variation on Roll Time Constant

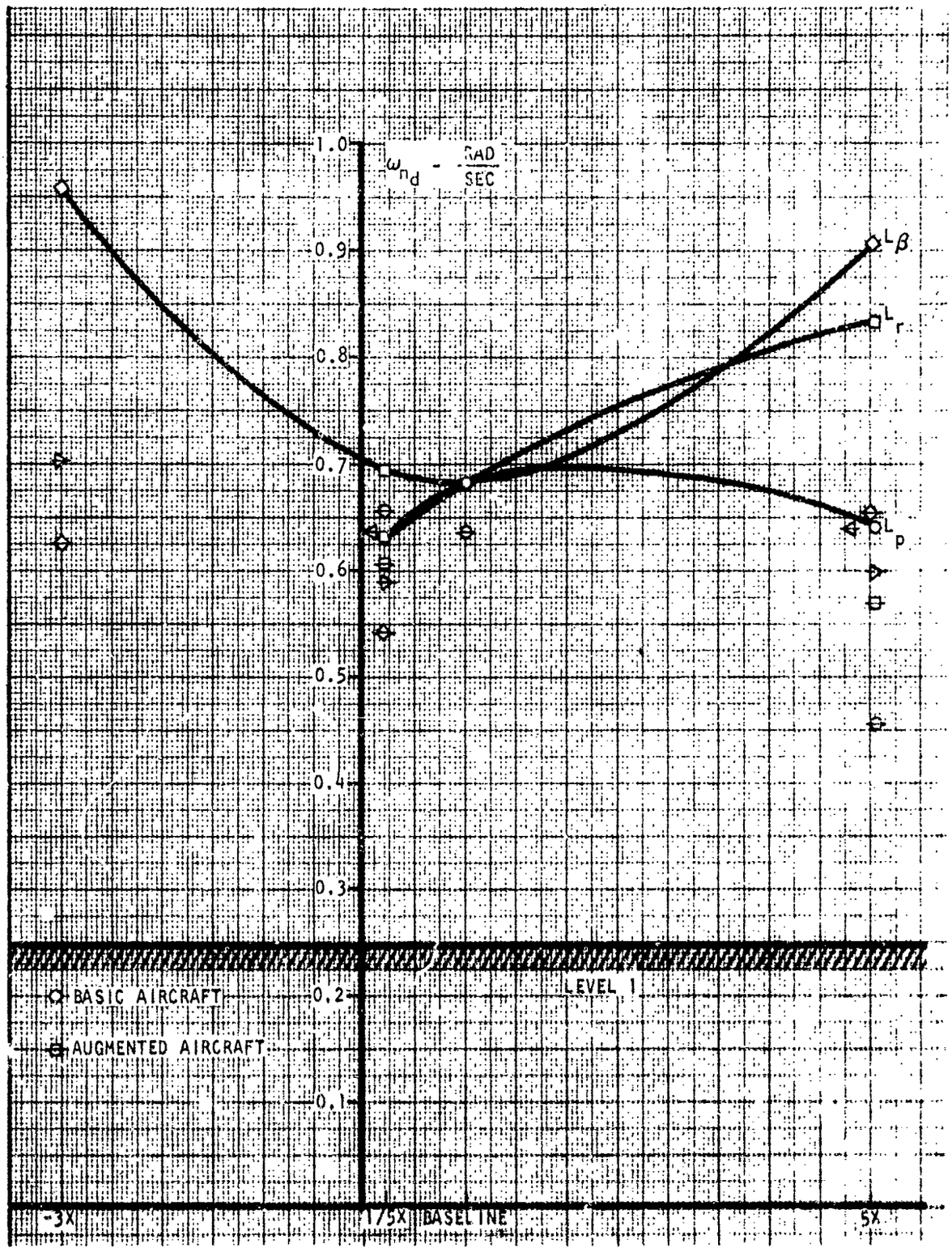

Figure 12. Effect of Rolling Moment Coefficient Variation on Dutch Roll Natural Frequency

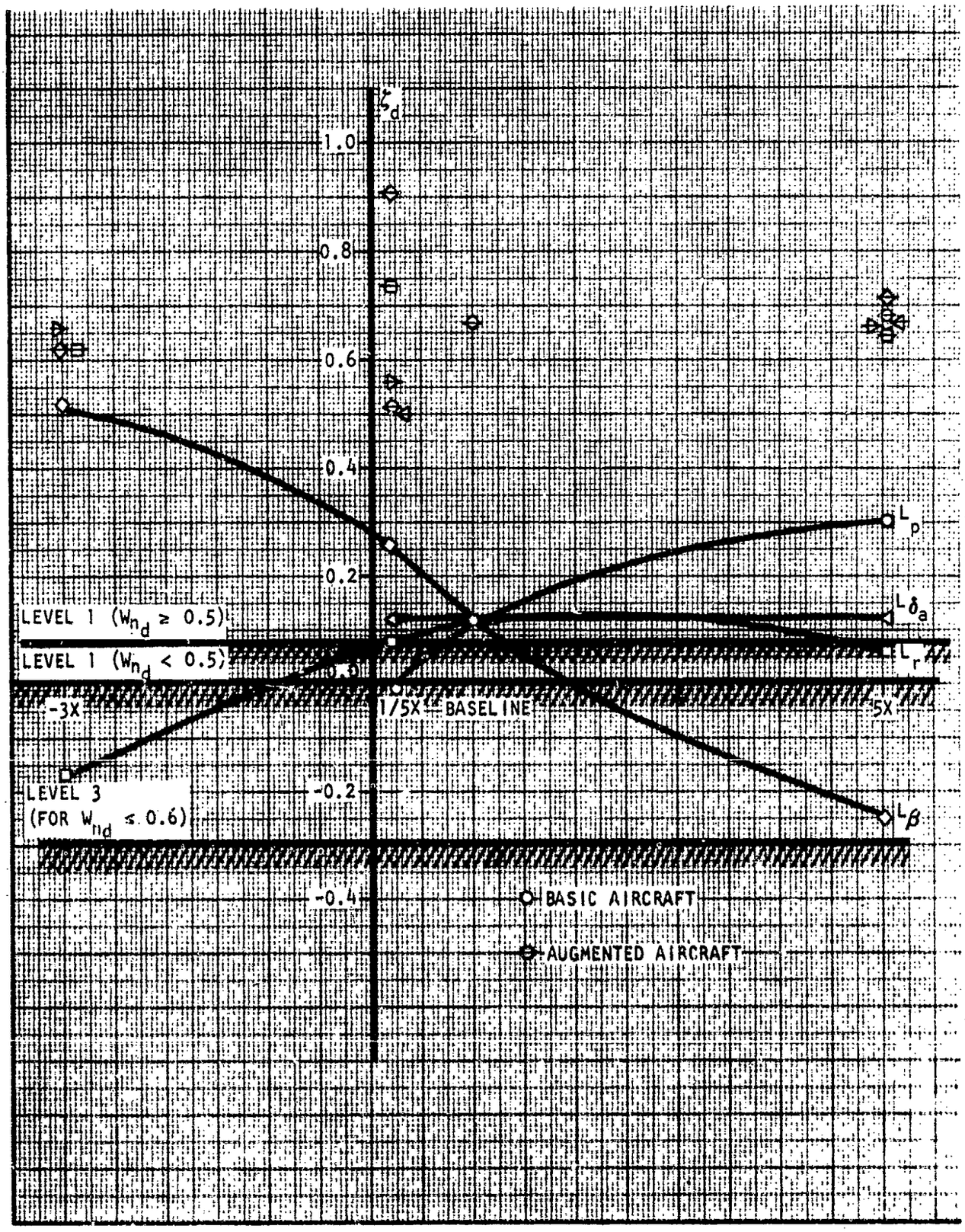

Figure 13. Effect of Rolling Moment Coefficient Variation on Dutch Roll Damping

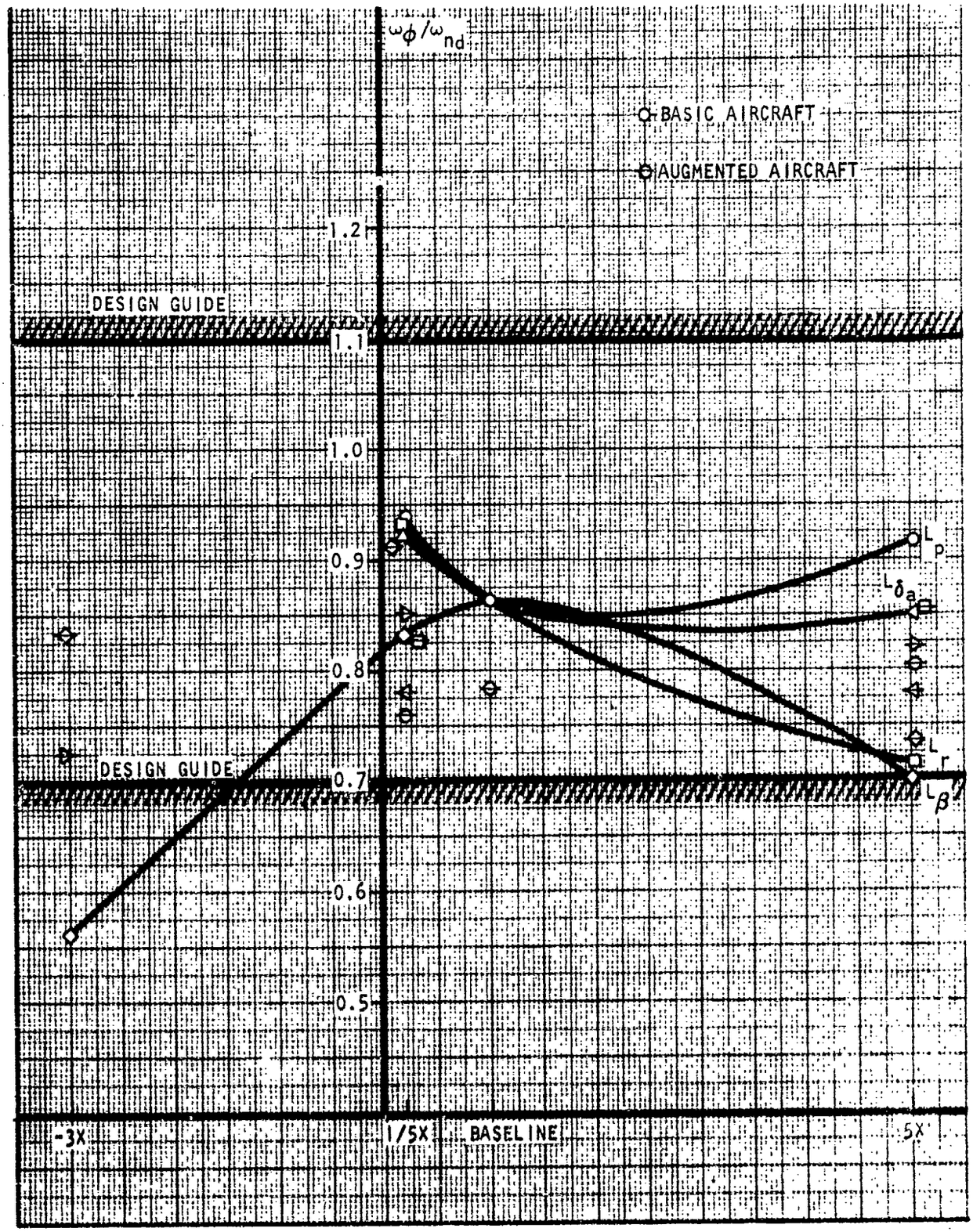

Figure 14. Effect of Rolling Moment Coefficient Variation on ω_ϕ/ω_{n_d}

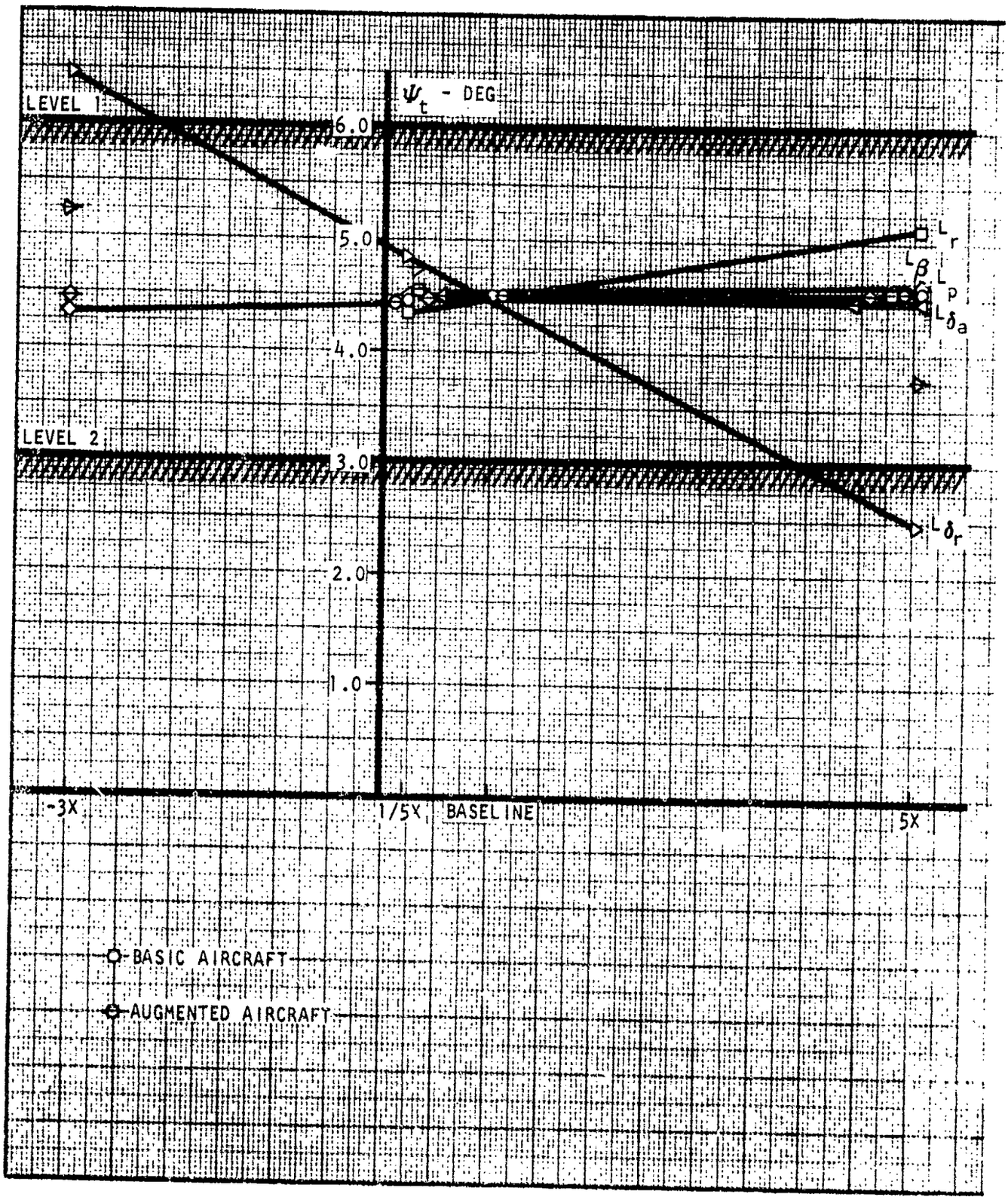

Figure 13. Effect of Rolling Moment Coefficient Variation on ψ_t

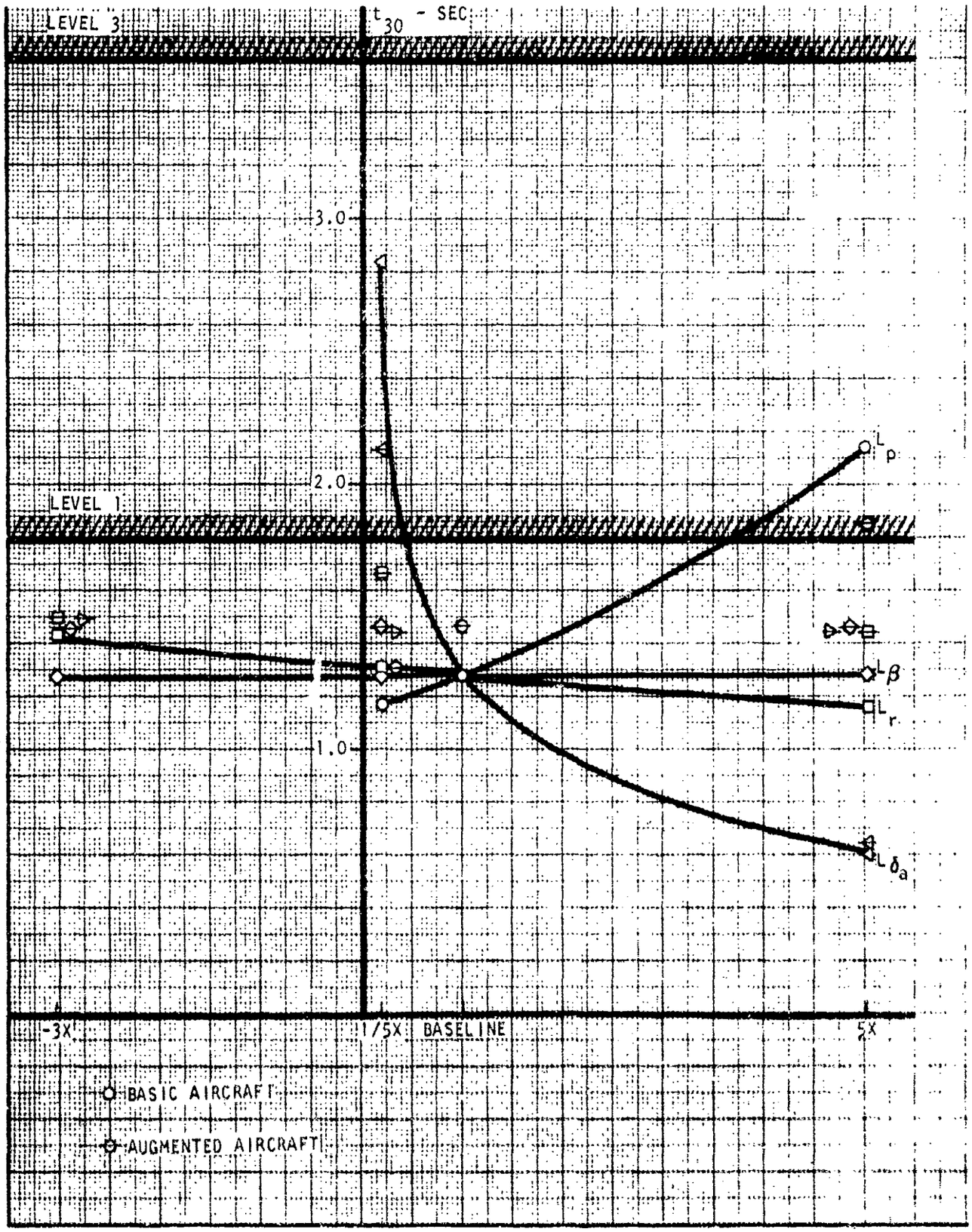

Figure 16. Effect of Rolling Moment Coefficient Variation on t_{30}

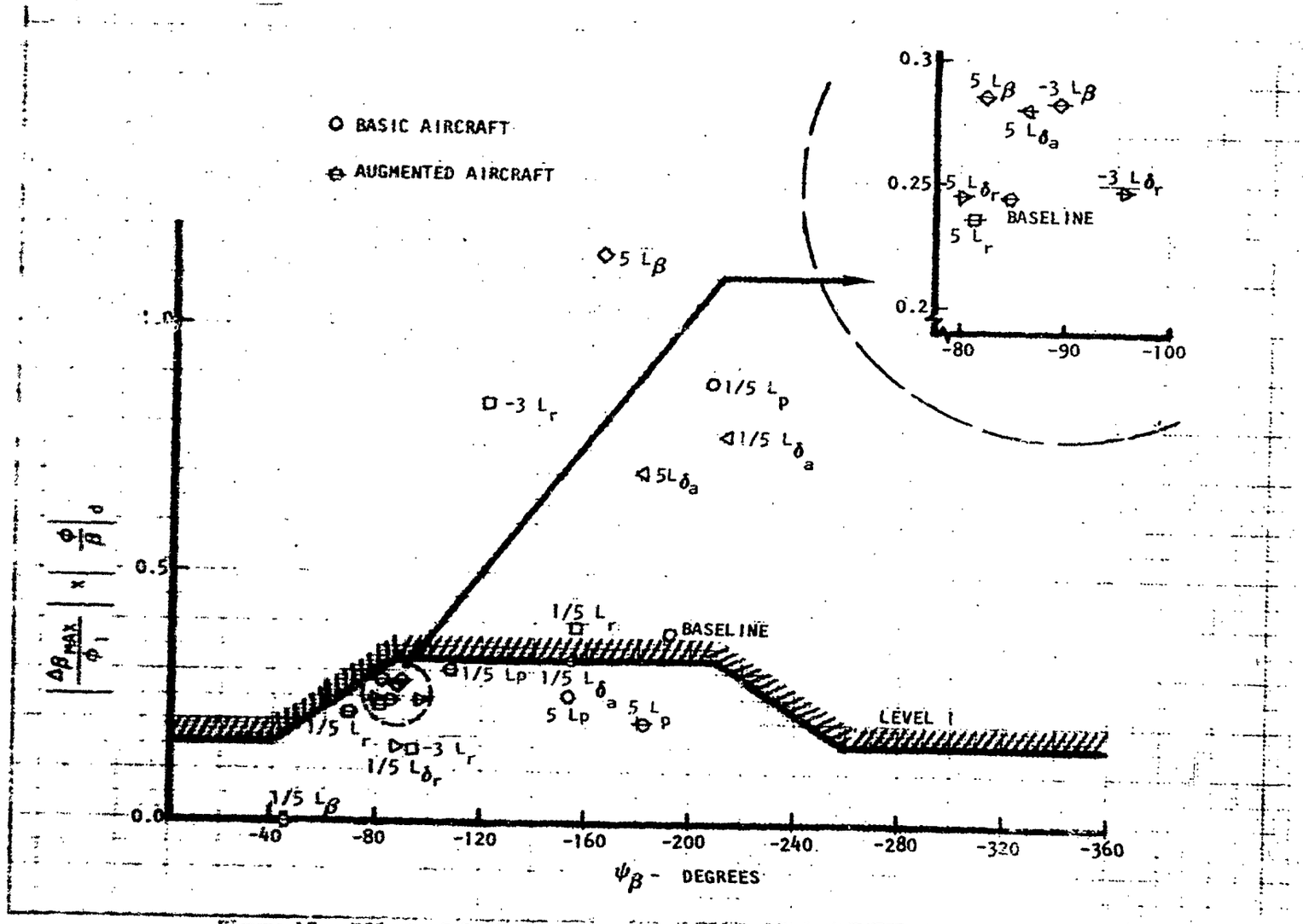

Figure 17. Effect of Rolling Moment Coefficient Variation on $|\Delta\beta/\phi| \times |\phi/\beta|_d$

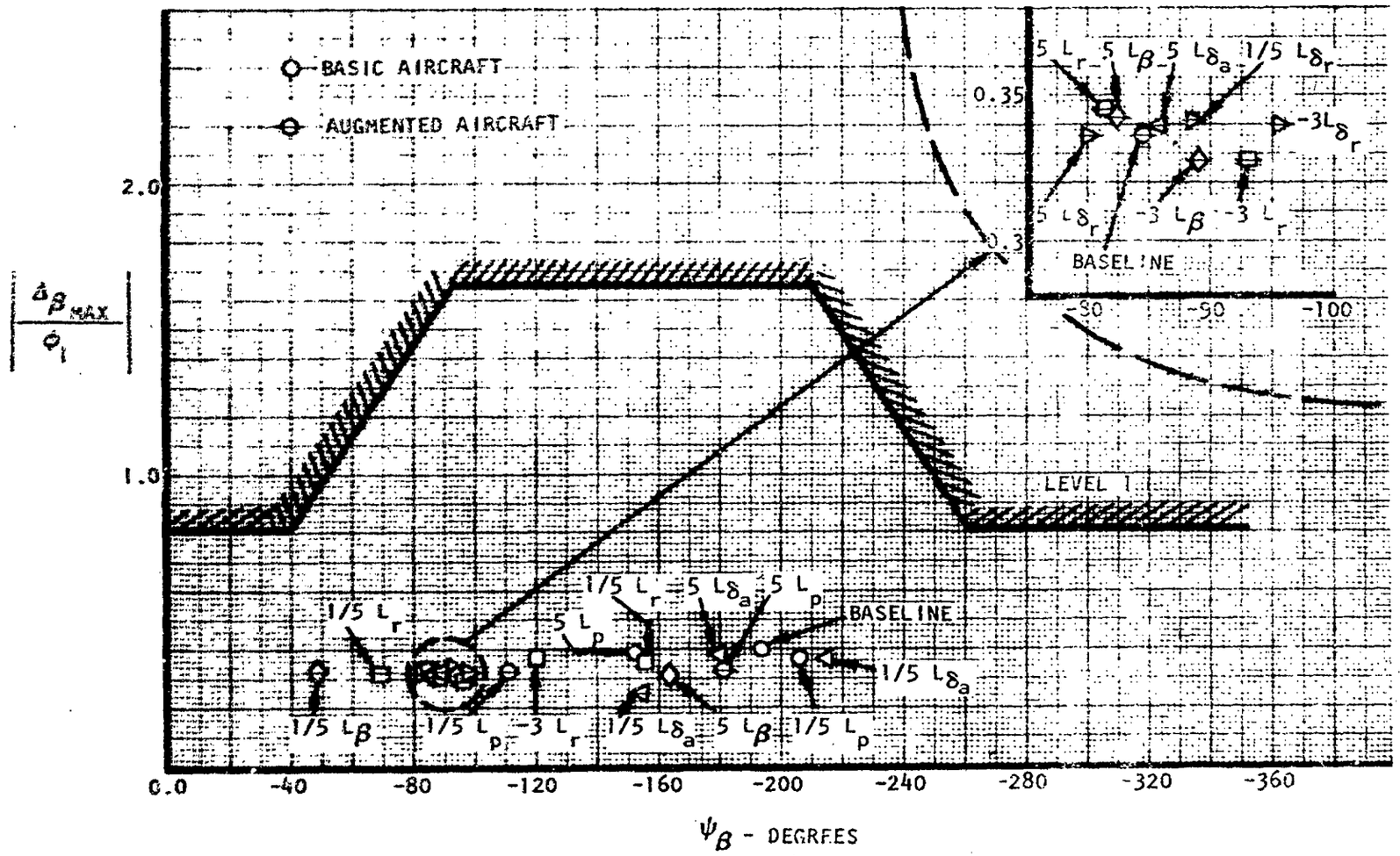

Figure 18. Effect of Rolling Moment Coefficient Variation on $|\Delta\beta max/\phi_1|$

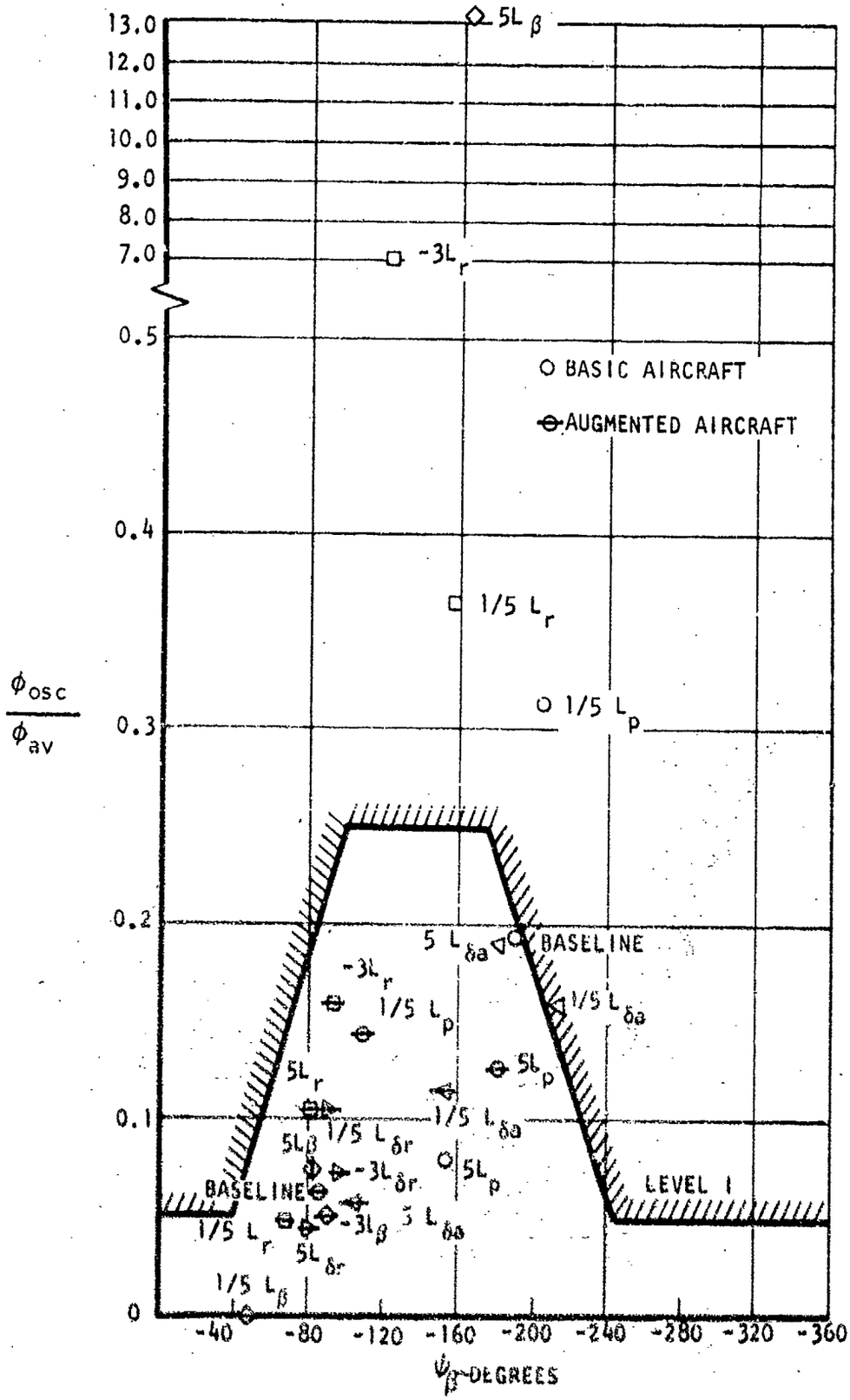

Figure 19. Effect of Rolling Moment Coefficient Variation on $\frac{\phi_{osc}}{\phi_{av}}$

With baseline augmentation operative the smallest value of Lp analyzed, 0.2 times the baseline value, satisfied all Level 1 response requirements. With augmentation on and a gross change of 5.0 times the baseline Lp, the response failed to meet Level 1 requirements on the spiral mode time constant and roll control effectiveness. To satisfy Level 1 requirements on the spiral mode time constant only a simple adjustment on the yaw rate feedback gain in the roll augmentation was required. To improve roll control effectiveness with a large roll damping term, a wheel coupling into yaw augmentation mechanization similar to the rudder coupling into roll analyzed for the baseline case was investigated. A detailed analysis of this augmentation technique is given in Appendix IV. Results indicate that no augmentation can be defined which will increase roll control power sufficiently to meet Level 1 requirements for t_{30} for the 5 Lp case, although significant improvement over the unaugmented aircraft response is realizable. With a value of Lp 4.3 times the baseline value, Level 1 t_{30} requirements were satisfied with the revised mechanization. Revised roll and yaw augmentation mechanizations for large values of Lp are shown in Figure 20.

Lr; Baseline Value = 0.997

Variations in Lr indicate a strong influence of this coefficient on the spiral mode time constant. Increasing positive values of Lr have a destabilizing effect on τ_s, whereas, increasing negative values tend to stabilize the spiral mode. For positive values of Lr, the coefficient has very little effect on the dutch roll damping, but for large negative values of Lr the dutch roll damping becomes unstable. For the basic aircraft, these data indicate that increasing negative values of Lr greater than -1.0 times the baseline value have unstable dutch roll damping.

Baseline augmentation proved to be sufficient for both large positive and negative values of Lr in achieving satisfactory spiral mode time constants. In both cases only a minor adjustment in the yaw rate feedback gain in the roll augmentation was required. A simple method of computing this gain to stabilize τ_s is shown in Appendix I. With proper augmentation all attainable Level 1 requirements were satisfied for the variations of Lr studied.

L_β ; Baseline Value = -0.742

Variation in L_β, the effective dihedral derivative, indicates a strong influence of the coefficient on the spiral mode, dutch roll damping, and roll time constant. Increasing negative values of L_β have a stabilizing effect on the spiral mode and destabilizing effect on the dutch roll damping. Conversely, decreasing negative and increasing positive values of L_β have a stabilizing effect on the dutch roll damping, an adverse or increasing effect on roll time constant, and destabilizing effect on the spiral mode.

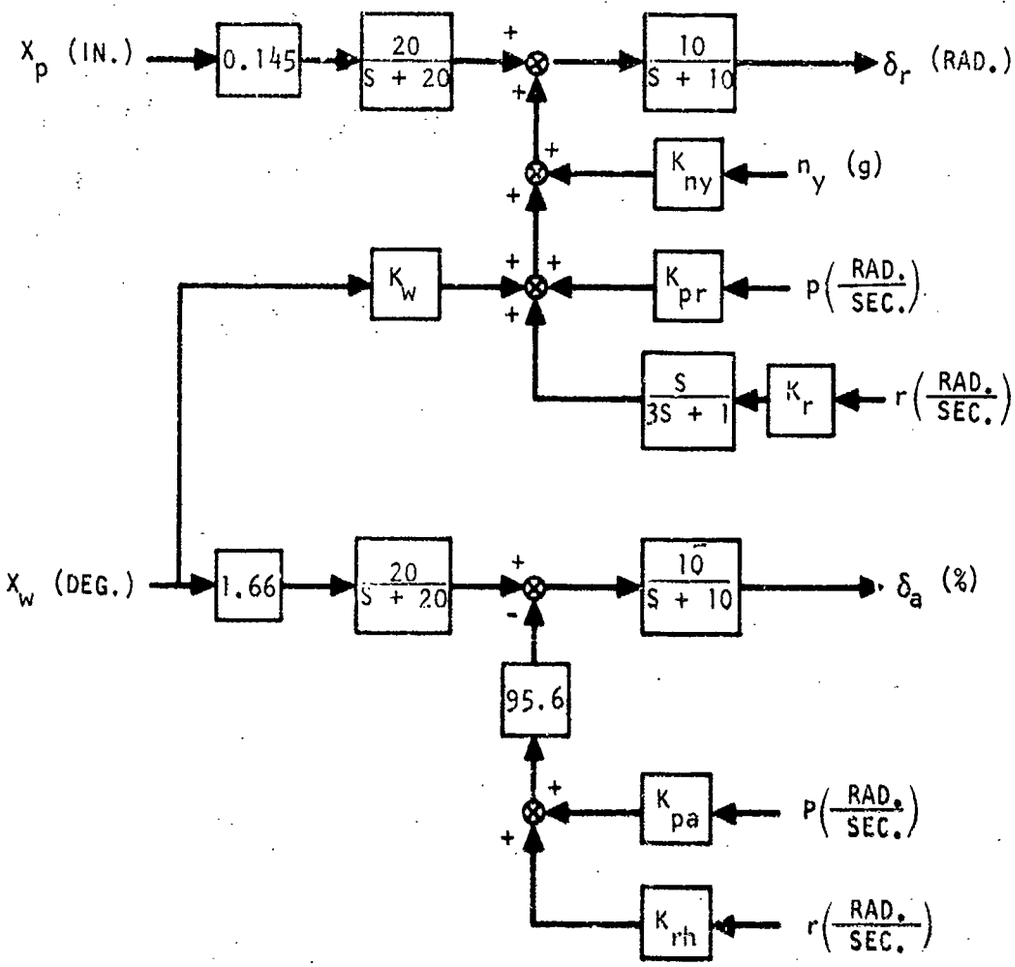

Figure 20. Roll and Yaw Control Systems w/Wheel Coupling into Yaw

With baseline augmentation operating, all L_β variations analyzed indicated stable dutch roll damping, however, with large negative values of L_β, dutch roll damping is small, and unsatisfactory ϕ_{osc}/ϕ_{AV} characteristics necessitated additional augmentation analysis. For large positive values of L_β, the spiral mode fails to meet Level 1 requirements. In defining revised augmentation for both the largest negative value, 5.0 times the baseline value, and the largest positive, -3.0 times the baseline value, the simultaneous solution of aerodynamic coefficients method was utilized.

Revised augmentation systems for the roll and yaw axes are shown in Figures 21 and 22 with sideslip angle feedbacks. In both cases, it is expected that the β feedback loops defined by this method can be replaced by more conventional n_y feedback loops if necessary. With revised augmentation all attainable Level 1 requirements were satisfied.

$L_{\delta a}$; Baseline Value = 0.00901

For variations in $L_{\delta a}$, only the roll control effectiveness and ω_ϕ/ω_{n_d} of the unaugmented aircraft are affected. For values of $L_{\delta a}$ less than 0.58 times the baseline value, roll effectiveness is insufficient to meet Level 1 requirements for t_{30}. For none of the values of $L_{\delta a}$ studied did ω_ϕ/ω_{n_d} exceed the design guides.

With baseline augmentation operating, the spiral mode time constant for both the largest and smallest values of $L_{\delta a}$ studied were unsatisfactory. Since the effectiveness of roll augmentation is largely dependent on the magnitude of $L_{\delta a}$, only minor adjustments were necessary to the roll augmentation feedback gains to provide satisfactory lateral-directional roots to compensate for increased or decreased values of $L_{\delta a}$. In order to increase roll control effectiveness, the same type of roll and yaw augmentation mechanization as used in the 5 L_p case was investigated. With the wheel coupling into yaw augmentation mechanization, a minimum value of $L_{\delta a}$ that is 0.4 times the baseline value can be accommodated to meet the Level 1 requirement on t_{30} when 100 percent of available rudder is utilized to augment aileron control. A detailed analysis of this problem is found in Appendix IV.

$L_{\delta r}$; Baseline Value = 0.488

For the basic aircraft, variations in $L_{\delta r}$ only affect the yaw control effectiveness and ω_ϕ/ω_{n_d}. Decreasing values of $L_{\delta r}$ tend to increase yaw control effectiveness and values less than -2.1 times the baseline value satisfy Level 1 requirements on ψ_t.

With baseline augmentation operative, the largest negative value of $L_{\delta r}$, -3.0 times the baseline value, did not allow achieving a satisfactory spiral mode time constant. The large positive value of $L_{\delta r}$ prevented meeting design guides on ω_ϕ/ω_{n_d}. Satisfactory responses were achieved

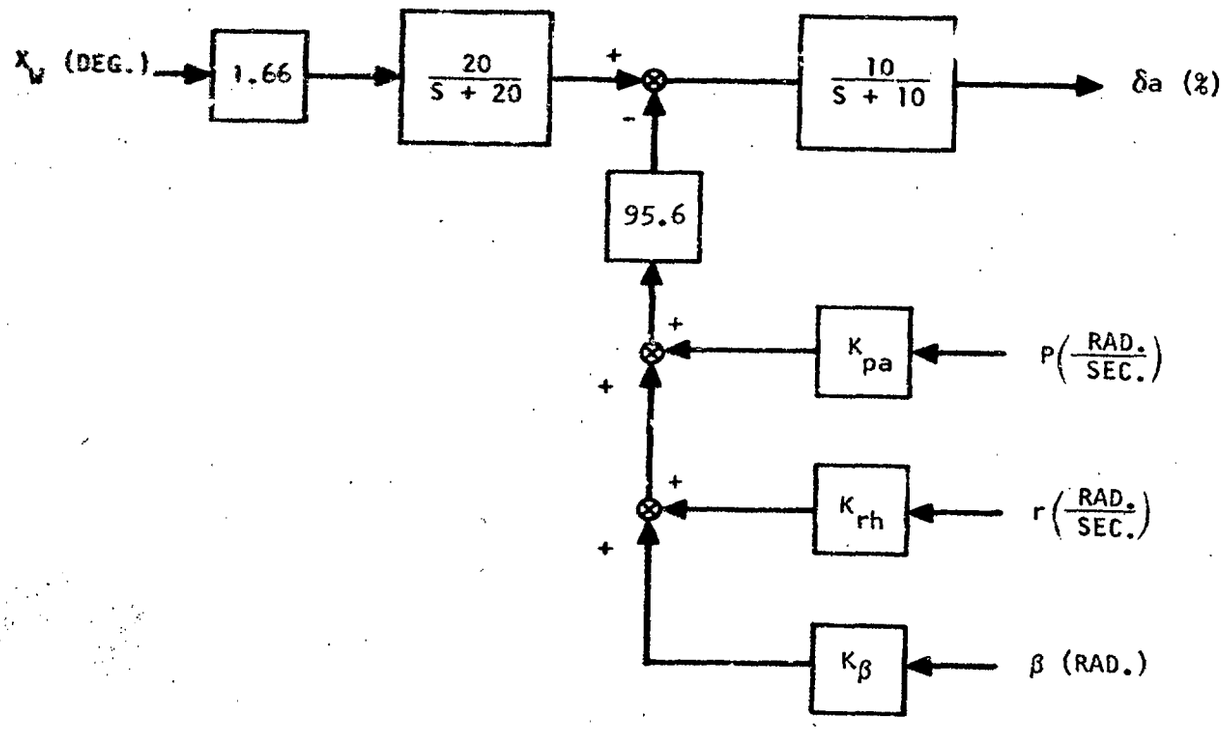

Figure 21. Roll Control and Augmentation System for L_β Variation

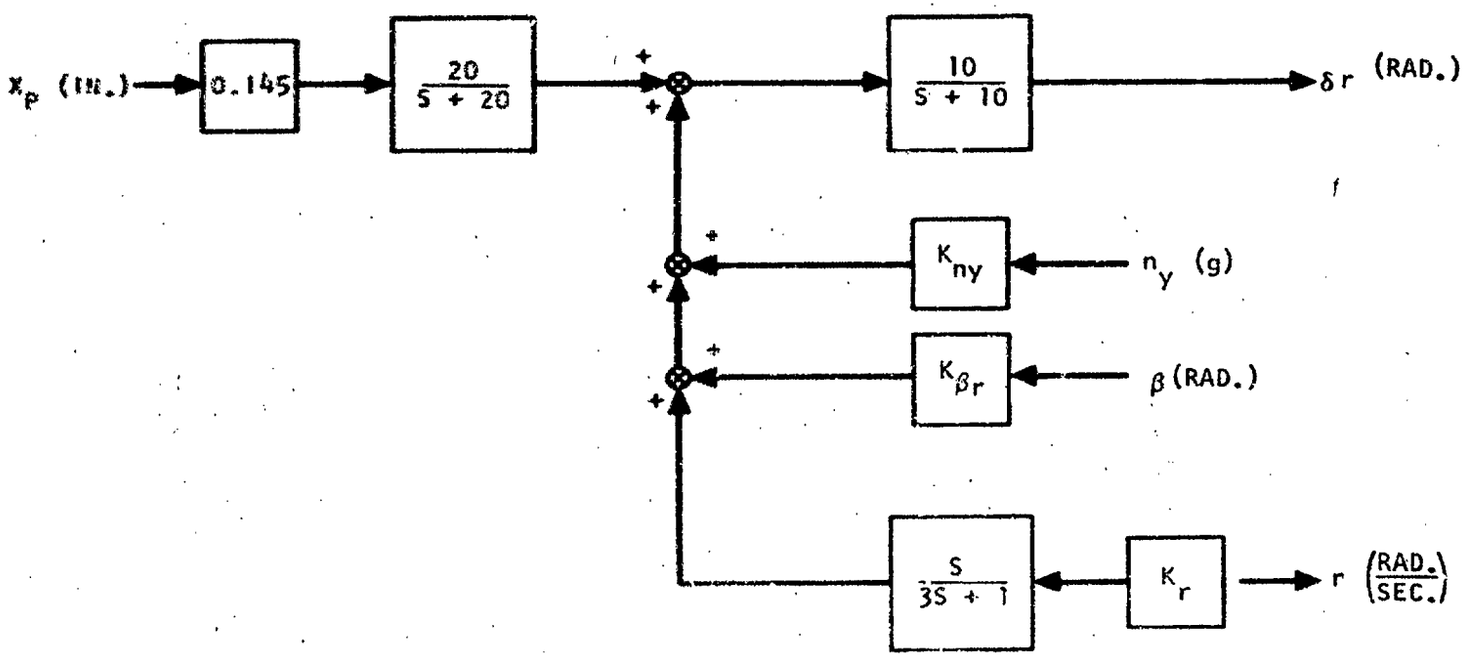

Figure 22. Yaw Control and Augmentation System for L_β Variation

by incorporating a rudder feedback into the roll augmentation as shown in Figure 23 to compensate for the increase or decrease of L_{δ_r}. This augmentation system was determined by the simultaneous solution of aerodynamic coefficient method.

YAWING MOMENT COEFFICIENTS

The effects of variation of the yawing moment coefficients are plotted in Figures 24 through 30 for $\tau_S, \tau_R, \omega_{nd}, \zeta_d, \omega_\phi/\omega_{nd}, \psi_t$, and t_{30}. The effects of variation in the yawing moment coefficients on

$$\left|\Delta\beta_{max}/\phi_1\right| \times \left|\phi/\beta\right|_d, \quad \left|\Delta\beta_{max}/\phi_1\right|, \text{ and } \quad \phi_{osc}/\phi_{AV}$$

are shown in Figures 31 through 33. In all cases both the basic and augmented aircraft responses are plotted. If baseline augmentation is insufficient to provide Level 1 response characteristics, revised augmentation responses are plotted instead.

Transfer functions for the basic, baseline augmented, and revised augmented aircraft are given in Appendix III for all yawing moment coefficient variations analyzed.

N_p ; baseline value = 0.0703

Variation in N_p through the range of values studied indicated very little influence of the coefficient on lateral-directional dynamics, i.e. frequency and damping. Although N_p is generally fairly important for conventional aircraft for dutch roll damping considerations, very little change in ζ_d was noticed for this flight condition. The effect of large positive variation in yawing moment due to roll rate resulted in rather large values of ω_ϕ/ω_{nd} and a moderate increase in the spiral mode time constant. Large positive values of N_p tend to move the p/δ_a numerator zero and denominator pole such that the ω_ϕ/ω_{nd} ratio is greater than 1.1. This occurs for values of N_p greater than 3.5 times the baseline value. In terms of handling qualities, values of ω_ϕ/ω_{nd} greater than 1.1 are undesirable in that they result in reduced lateral-directional damping with increasing pilot or augmentation loop gains. The large positive values of N_p also resulted in reducing spiral mode stability.

With baseline augmentation operating, all positive values of N_p achieved satisfactory responses for all attainable level 1 requirements. For the largest negative value of N_p studied, -5.0 times the baseline value, a minor adjustment in the yaw rate feedback gain in roll augmentation was required to satisfy level 1 requirements on the spiral mode time constant. For the five times unaugmented N_p case, baseline augmentation

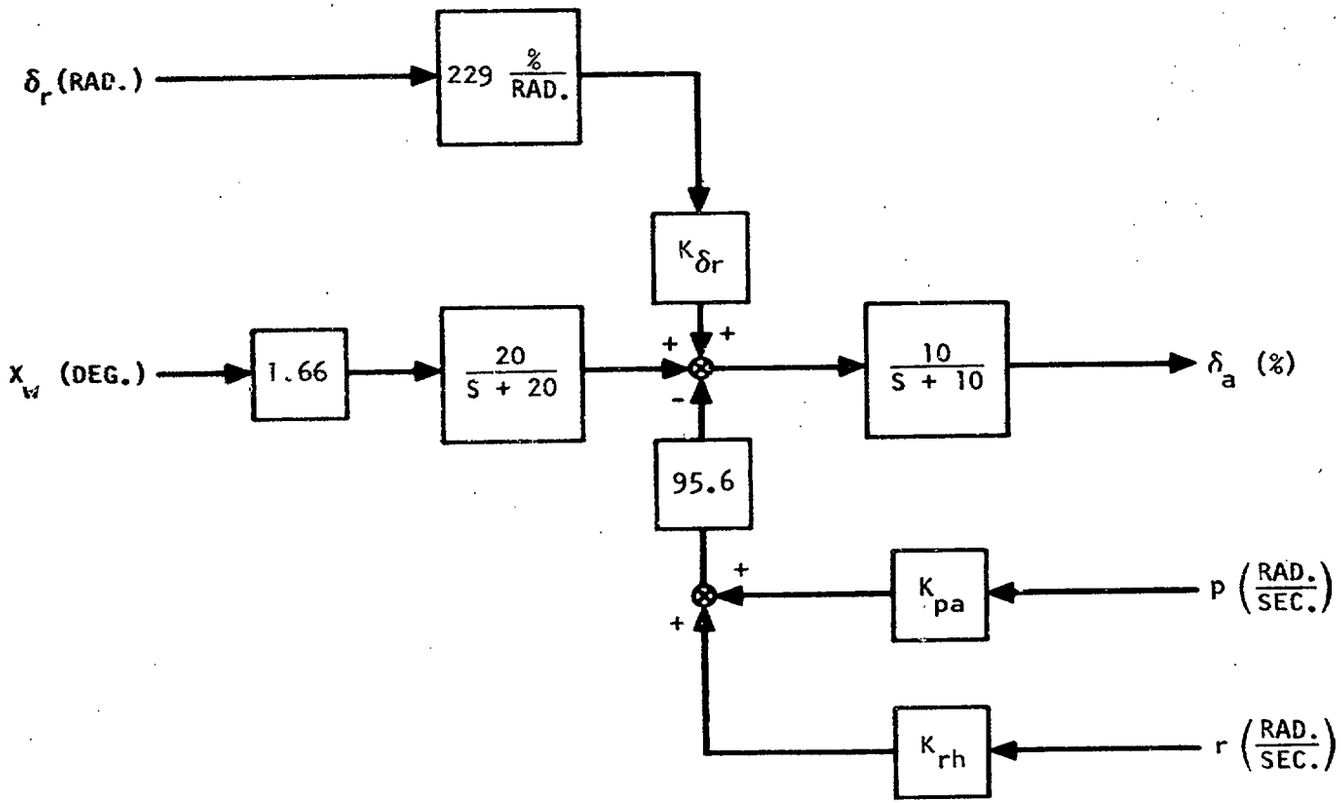

Figure 23. Roll Control and Augmentation System for L_{δ_r} Variation

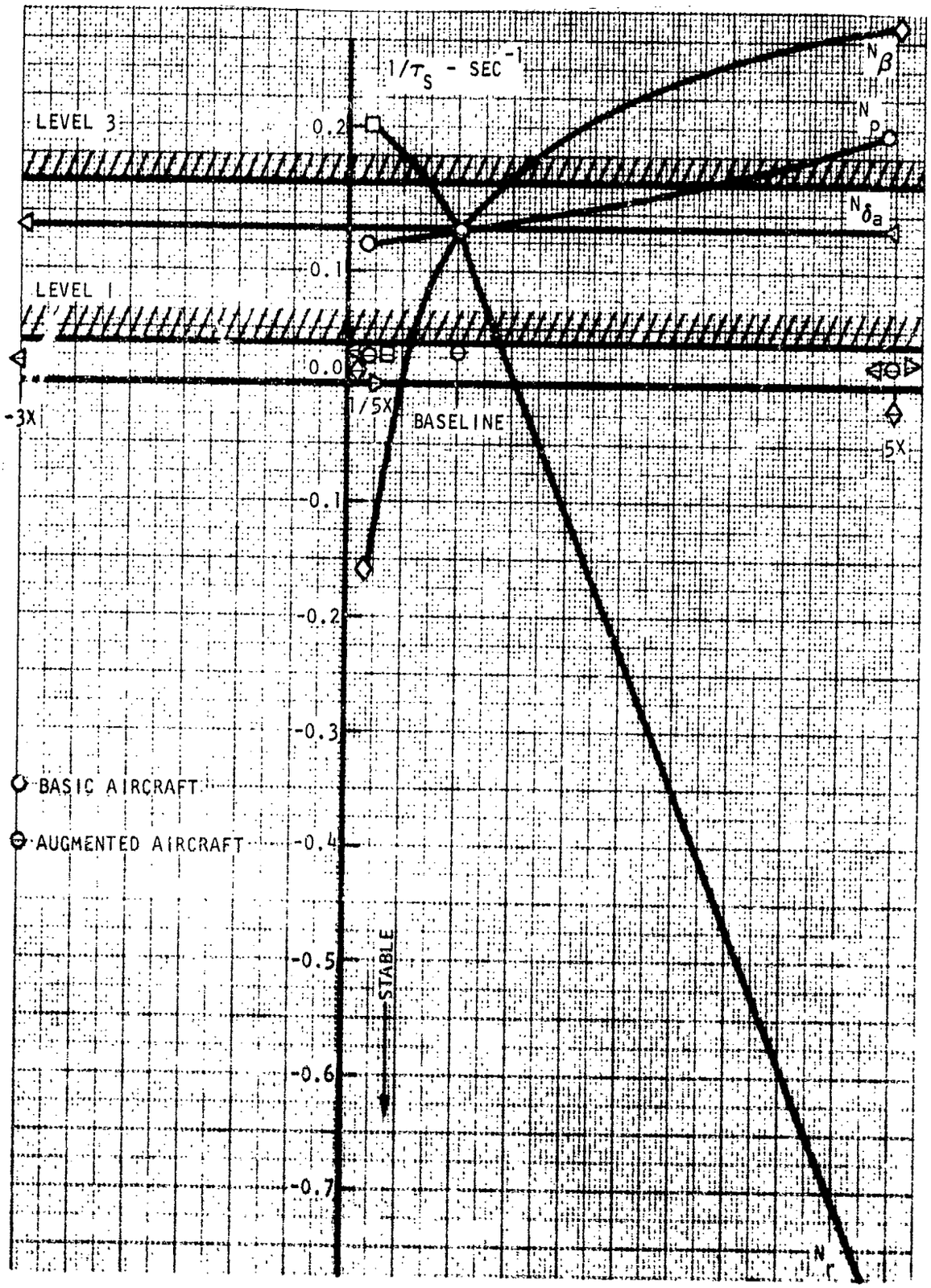

Figure 24. Effect of Yawing Moment Coefficient Variation on Spiral Mode Time Constant

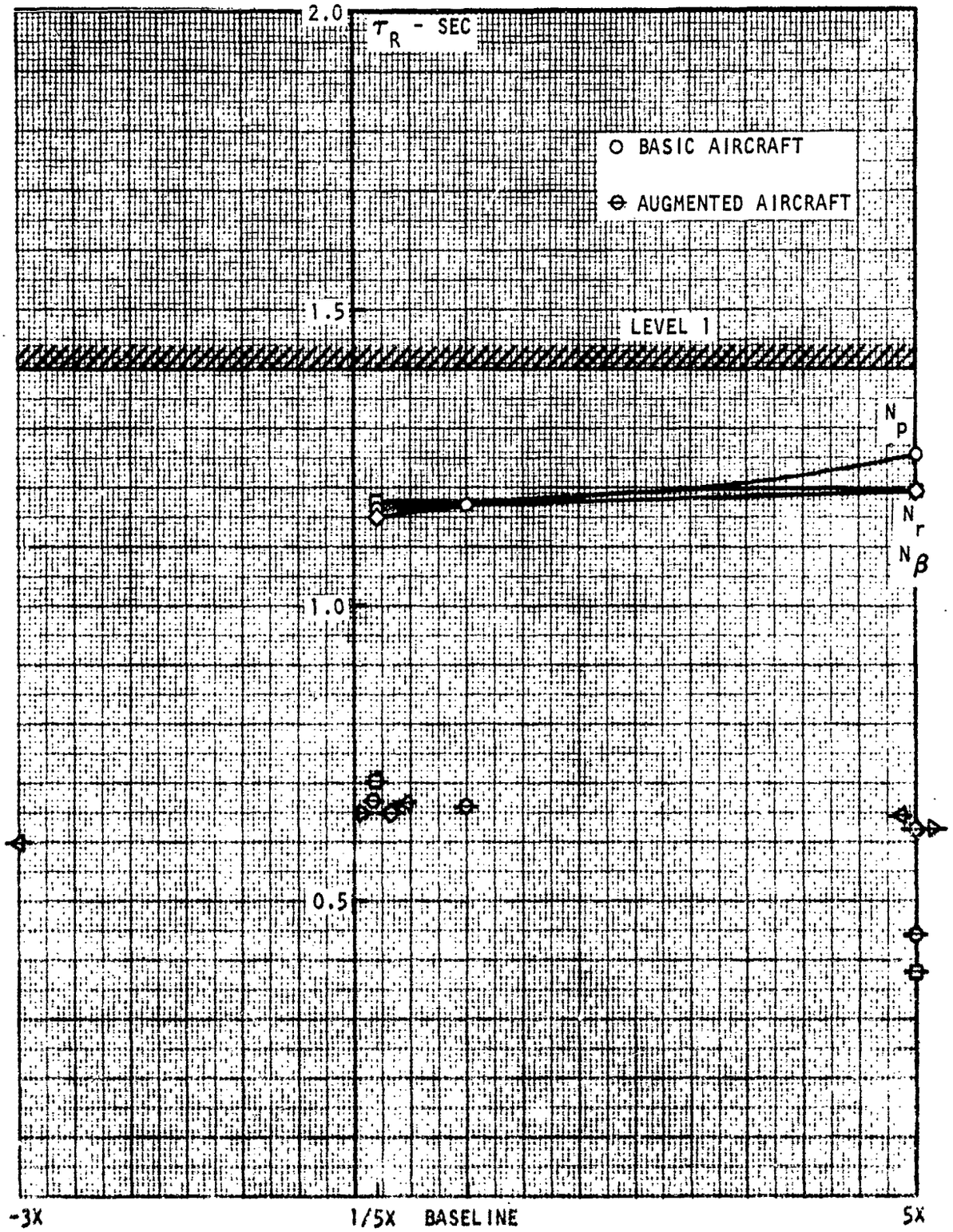

Figure 25. Effect of Yawing Moment Coefficient Variation on Roll Time Constant

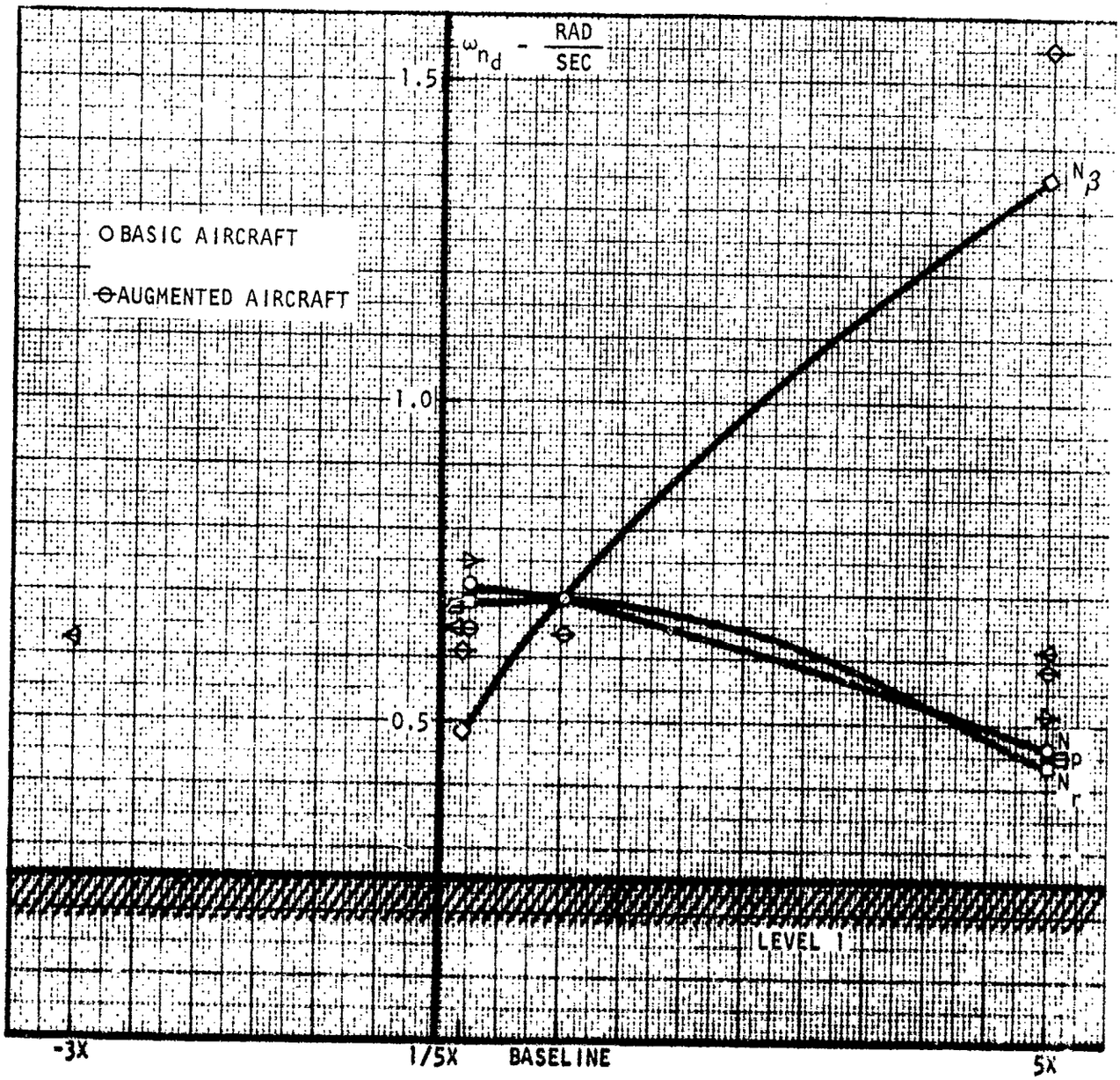

Figure 26. Effect of Yawing Moment Coefficient Variation on Dutch Roll Natural Frequency

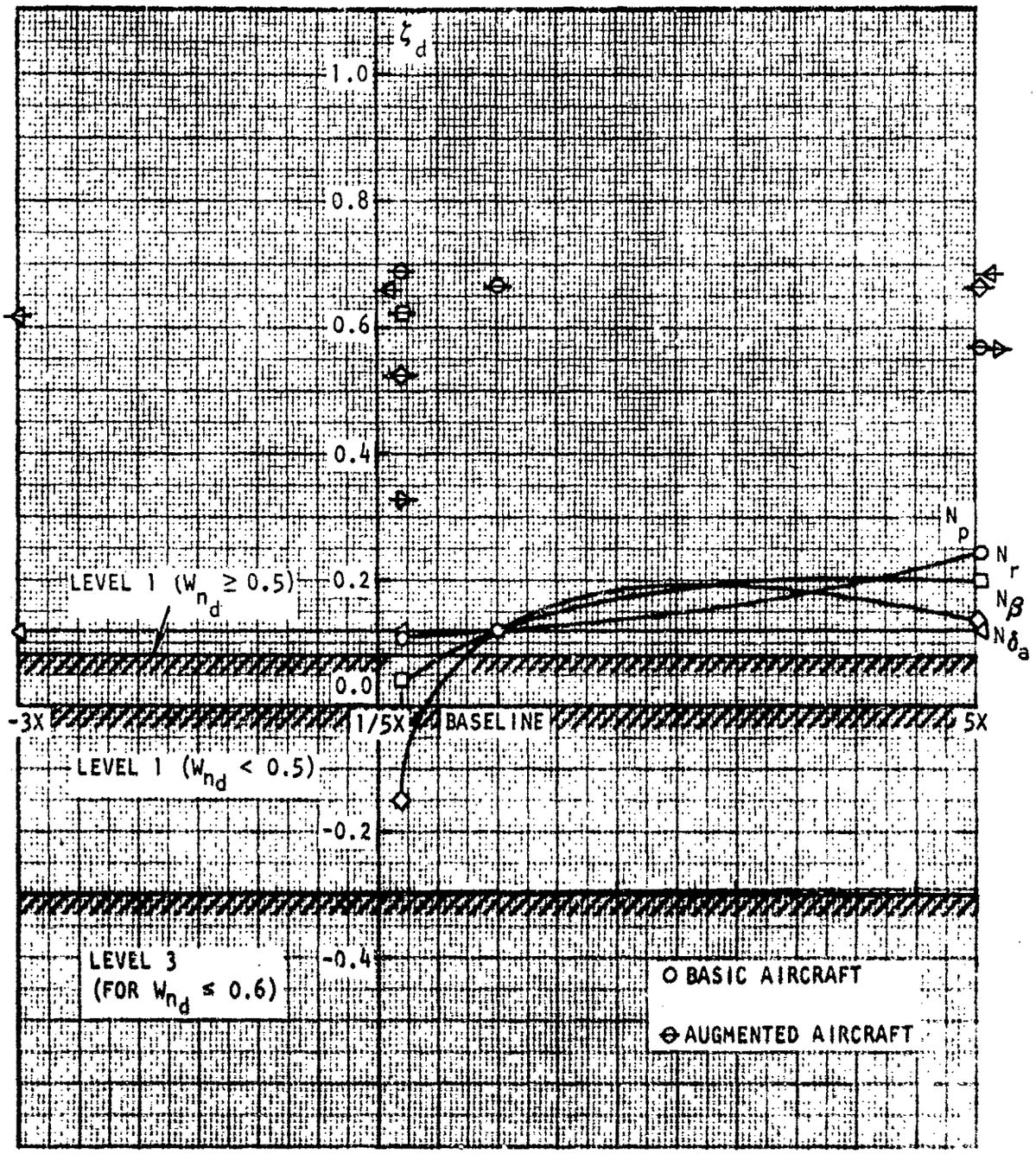

Figure 27. Effect of Yawing Moment Coefficient Variation on Dutch Roll Damping

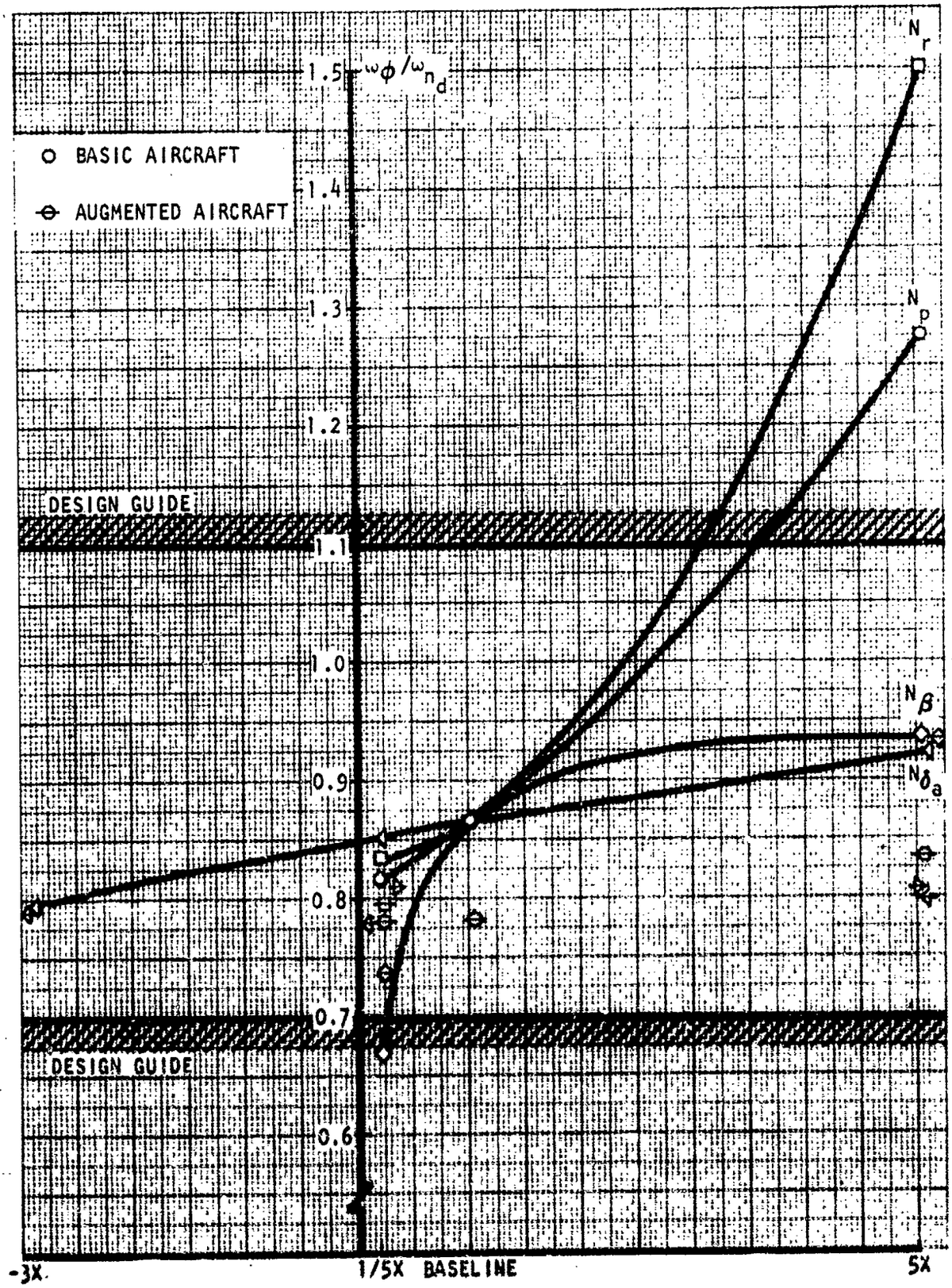

Figure 28. Effect of Yawing Moment Coefficient Variation on ω_ϕ/ω_{n_d}

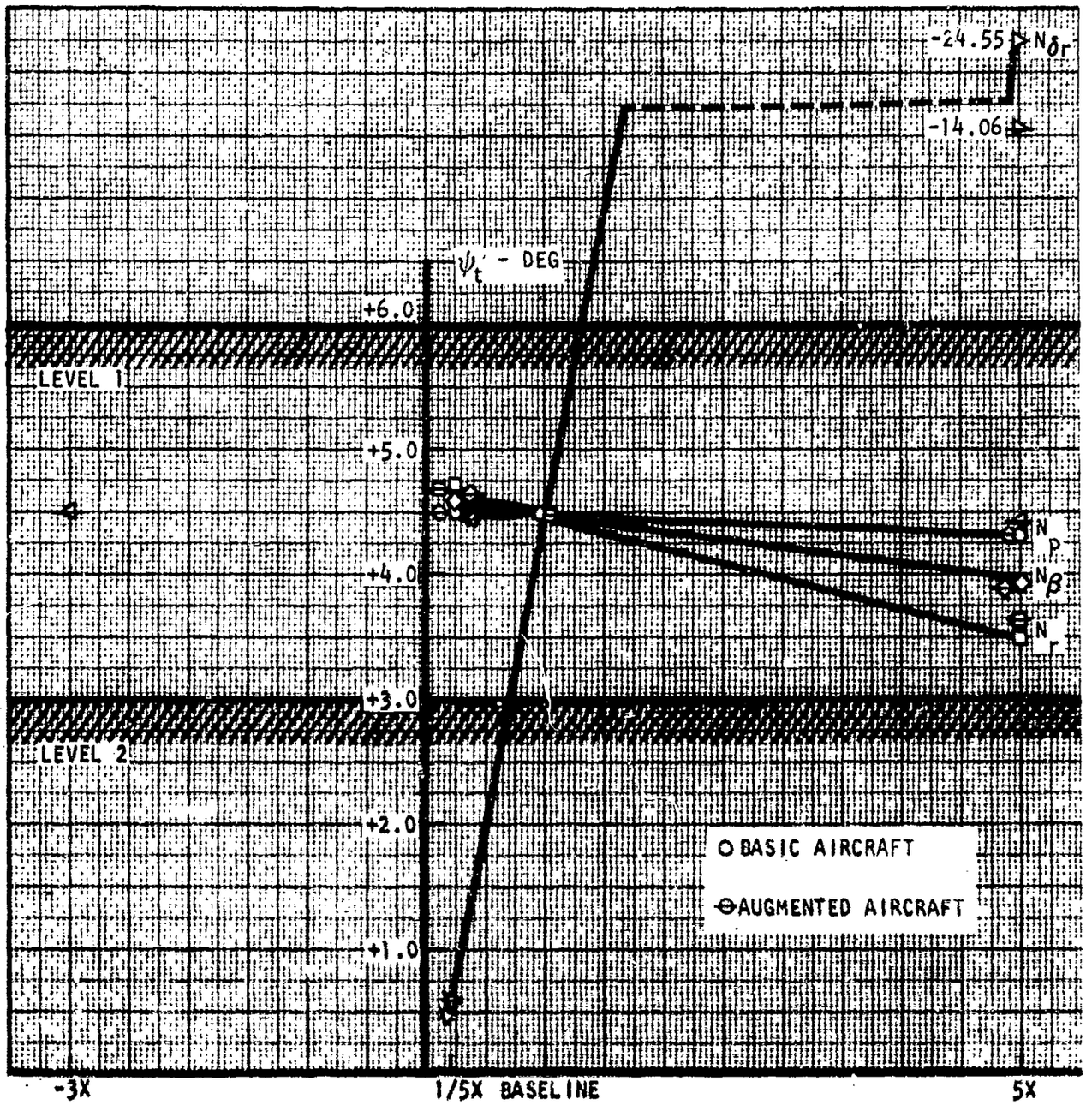

Figure 29. Effect of Yawing Moment Coefficient Variation on ψ_t

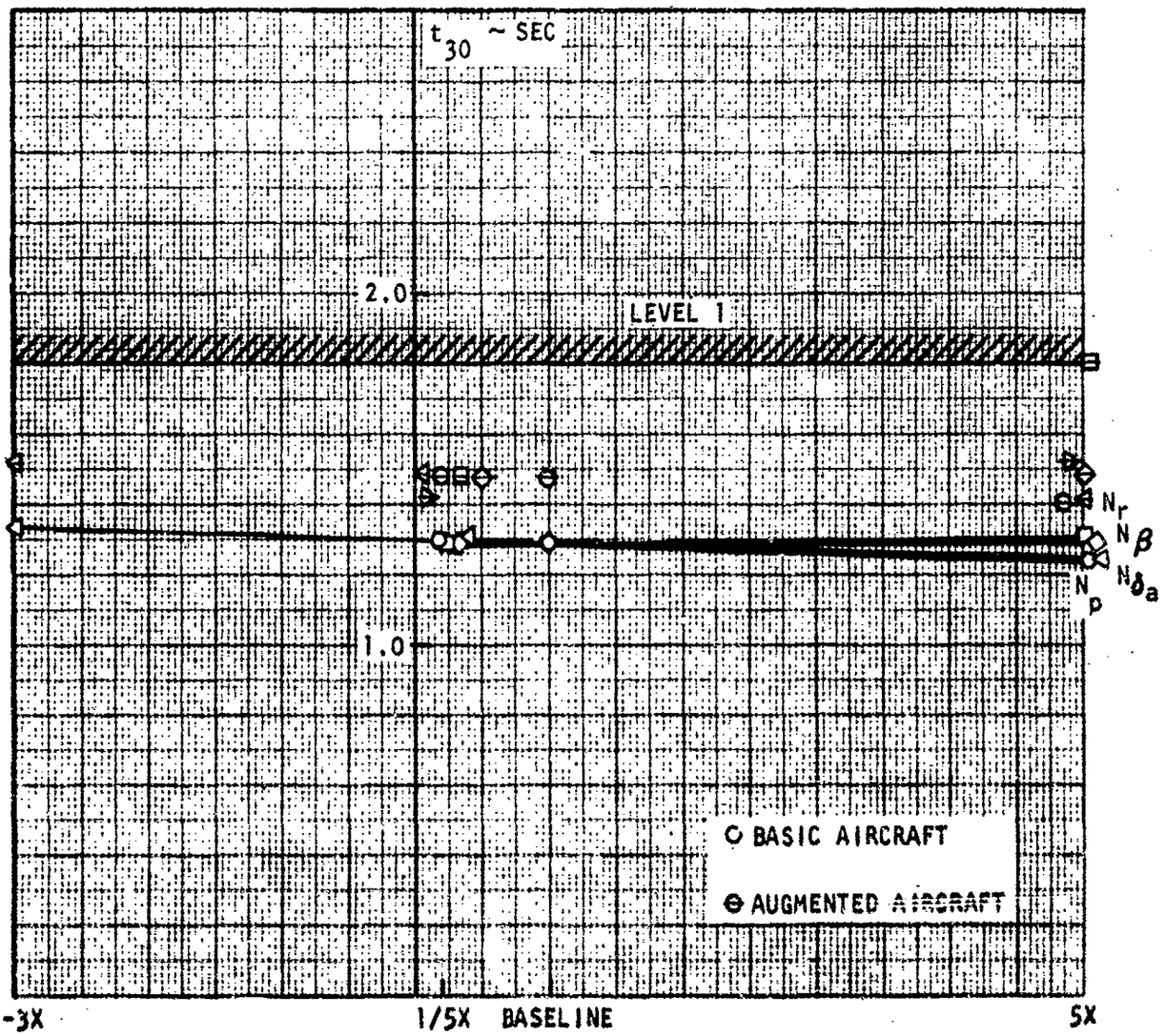

Figure 30. Effect of Yawing Moment Coefficient Variation on t_{30}

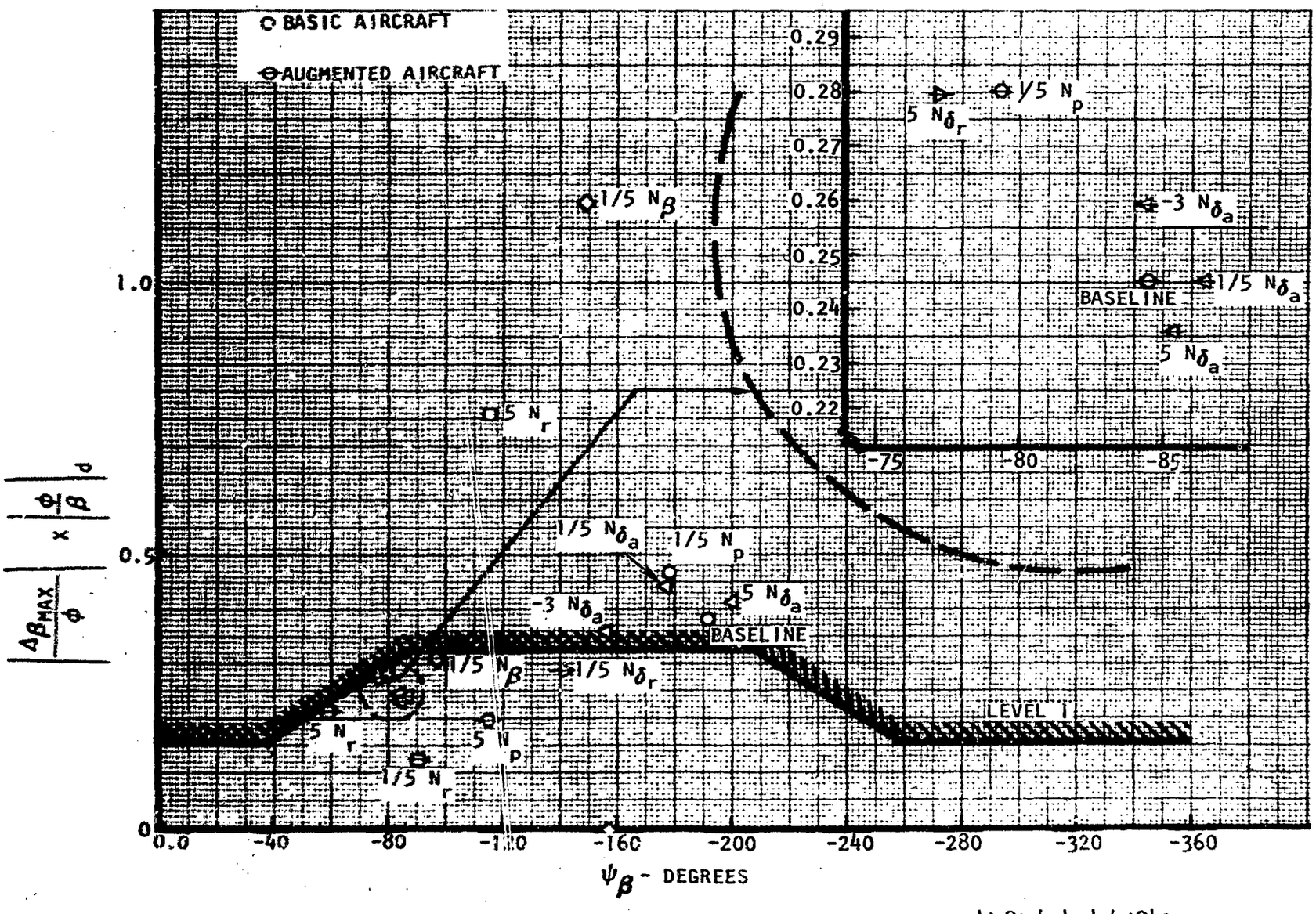

Figure 31. Effect of Yawing Moment Coefficient Variation on $|\Delta\beta/\phi_1| \times |\phi/\beta|_d$

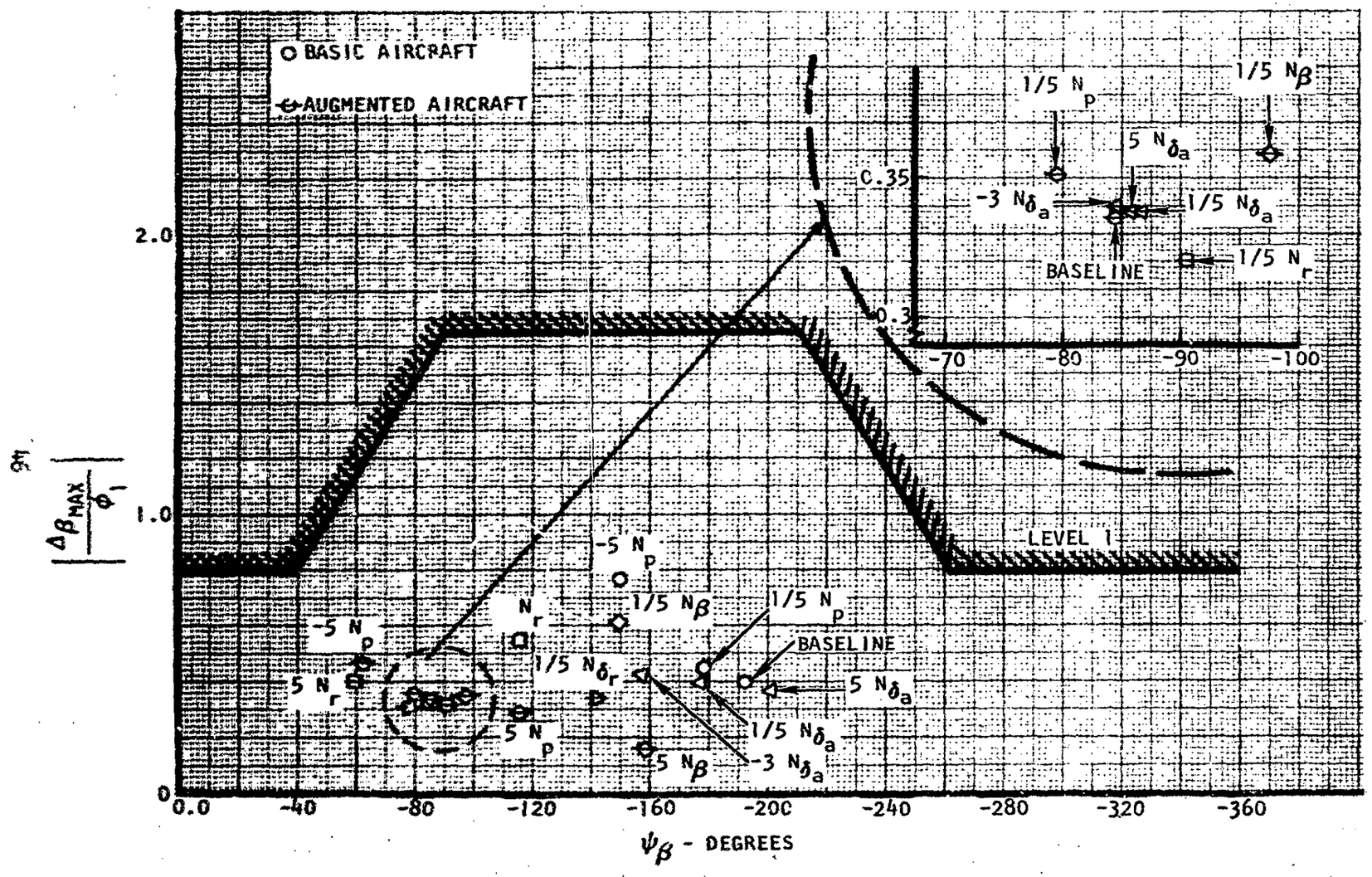

Figure 32. Effect of Yawing Moment Coefficient Variation on $|\Delta\beta/\phi_1|$

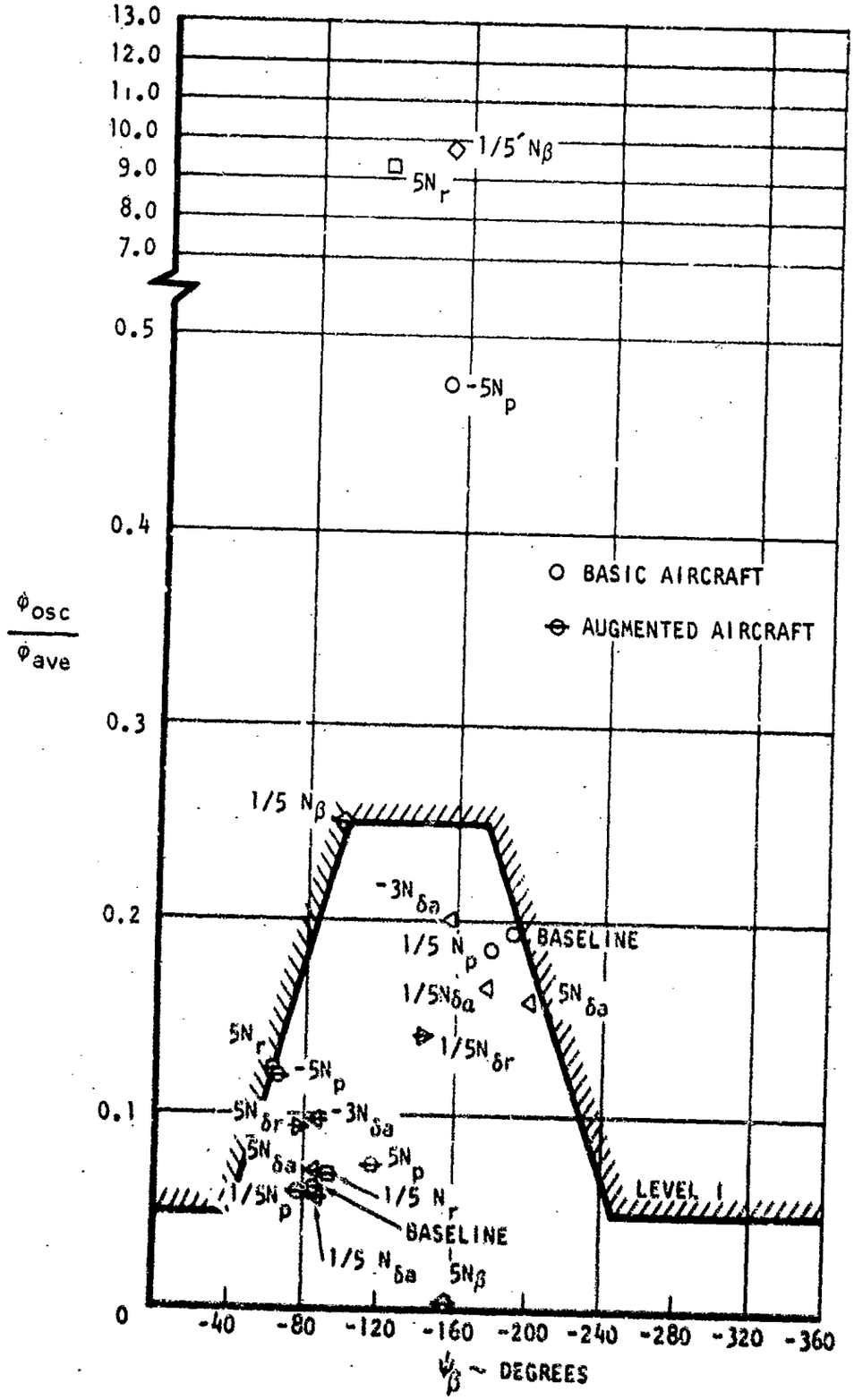

Figure 33. Effect of Yawing Moment Coefficient Variation on $\frac{\phi_{osc}}{\phi_{ave}}$

repositioned the P/δ_a zero and poles to a point where increasing pilot loop and/or augmentation gain results in increased lateral-directional damping. With proper augmentation, all attainable level 1 requirements were satisfied for variations in N_p.

N_r : baseline value =-0.232

Variations in N_r, the yaw damping term, indicates a strong influence of the term on the spiral mode time constant and ω_ϕ/ω_{n_d} for the basic aircraft. Large negative values of N_r induce undesirable large stable values for $1/\tau_s$ and undesirable values for ω_ϕ/ω_{n_d} . Small values of N_r induce undesirable large unstable values for $1/\tau_s$ and no adverse effect on ω_ϕ/ω_{n_d} .

With baseline augmentation operating, the small value of N_r studied failed to meet spiral mode time constant requirements and the large value failed to meet ϕ_{osc}/ϕ_{av}. In both cases a minor gain adjustment in the roll augmentation feedback gains was required to satisfy all attainable Level 1 requirements.

N_β : baseline value = 0.328

Variations in N_β indicate a strong influence of this coefficient on the spiral mode time constant, dutch roll frequency, ω_ϕ/ω_{n_d} , and dutch roll damping. Increasing the value of N_β from that of the baseline increases the dutch roll frequency and has a destabilizing effect on the spiral mode time constant. Increasing N_β has very little effect on the dutch roll damping and ω_ϕ/ω_{n_d} . Decreasing values of N_β from that of the baseline lowers the dutch roll frequency, stabilizes the spiral mode time constant, and reduces dutch roll damping driving it unstable. For values of N_β less than 0.6 times the baseline value, spiral mode time constants satisfy level 1 requirements for the basic aircraft. For values of N_β less than 0.4 times the baseline value dutch roll damping becomes unstable.

For both large and small values of N_β, baseline augmentation was insufficient to provide satisfactory level 1 characteristics. For the 0.2 times N_β case it was necessary to increase dutch roll damping to satisfy ϕ_{osc}/ϕ_{av} requirements. This was accomplished by changing the yaw augmentation gains. For the 5.0 times the baseline value case, the unsatisfactory spiral divergence mode was improved by changing the yaw rate feedback gain in the roll augmentation system. With proper augmentation, both the high and low values of N_β studied satisfied all attainable level 1 handling qualities requirements.

N_{δ_a} : baseline values = 0.000183

Variation in N_{δ_a} indicated very little effect of the coefficient on lateral-directional response characteristics with baseline augmentation off or on. For the largest positive value of N_{δ_a} analyzed, baseline augmentation was sufficient to satisfy all attainable level 1 response requirements. For the largest negative value of N_{δ_a} analyzed, the -3.0 times the baseline value case, a minor adjustment in the yaw rate feedback gain in the roll augmentation was necessitated in order to achieve level 1 requirements for the spiral mode time constant.

N_{δ_r} : baseline value =-0.555

Variation in N_{δ_r}, the yawing moment due to rudder, influences mainly the aircraft heading change in one second or, yaw control effectiveness. Values of N_{δ_r} greater than 1.3 times the baseline value satisfy level 1 requirements for ψ_t. Variation in N_{δ_r} does not affect any other handling quality response for the basic aircraft.

With baseline augmentation operating, the smallest value of N_{δ_r} studied, 0.2 times the baseline value, satisfied all level 1 requirements except for insufficient yaw control power. The largest value of N_{δ_r} studied, 5.0 times the baseline value, satisfied all level 1 requirements including that for ψ_t with only a minor adjustment in the yaw rate feedback gain in the roll augmentation system to satisfy spiral mode times constant requirements. The augmented spiral mode time constant for the 0.2 N_{δ_r} case is slightly stable as seen in Figure 24. This effect is an indirect result of the reduced yaw rate generated with the smaller rudder effectiveness coupling into the L_r term. The effect of L_r on the spiral mode time constant was noted in the previous section.

SIDE FORCE COEFFICIENTS

The effects of variation of the side force coefficients are plotted in Figures 34 through 40 for τ_s, τ_R, ω_{nd}, ζ_d, ω_ϕ/ω_{nd}, ψ_t, and t_{30}. The effects of variation in the side force coefficients on

$|\Delta\beta_{max}/\phi_1| \approx |\phi/\beta|_d$; $|\Delta\beta_{max}/\phi_1|$,

and ϕ_{osc}/ϕ_{av} are shown in Figures 41 through 43. In all cases, both the basic and augmented aircraft responses are plotted. If baseline augmentation is insufficient to provide level 1 response characteristics, revised augmentation responses are plotted instead. ϕ/x_w transfer functions for the basic, baseline augmented, and revised augmented aircraft are given in Appendix III for all side force coefficient variations analyzed.

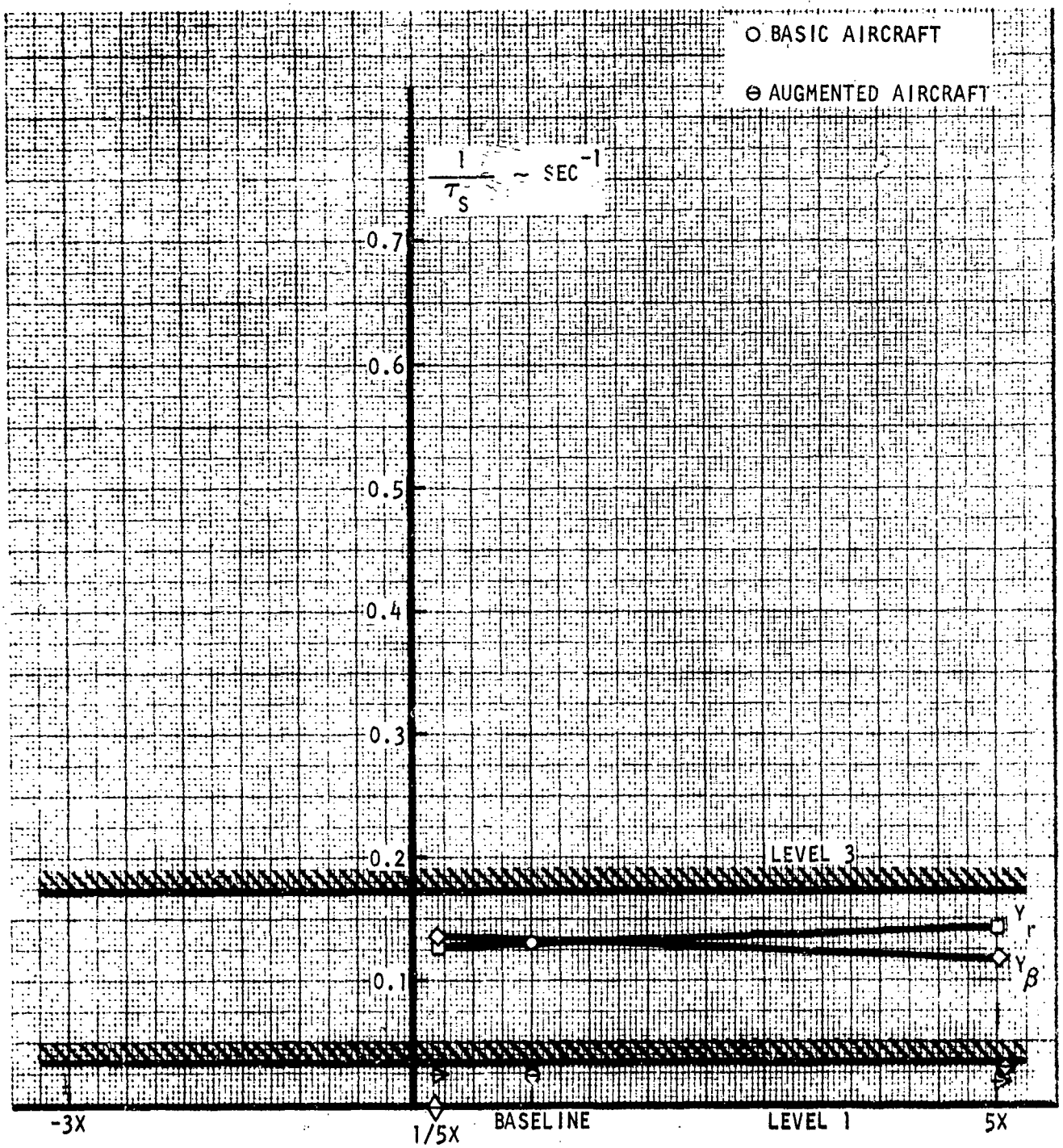

Figure 34. Effect of Side Force Coefficient Variation on Spiral Mode Time Constant

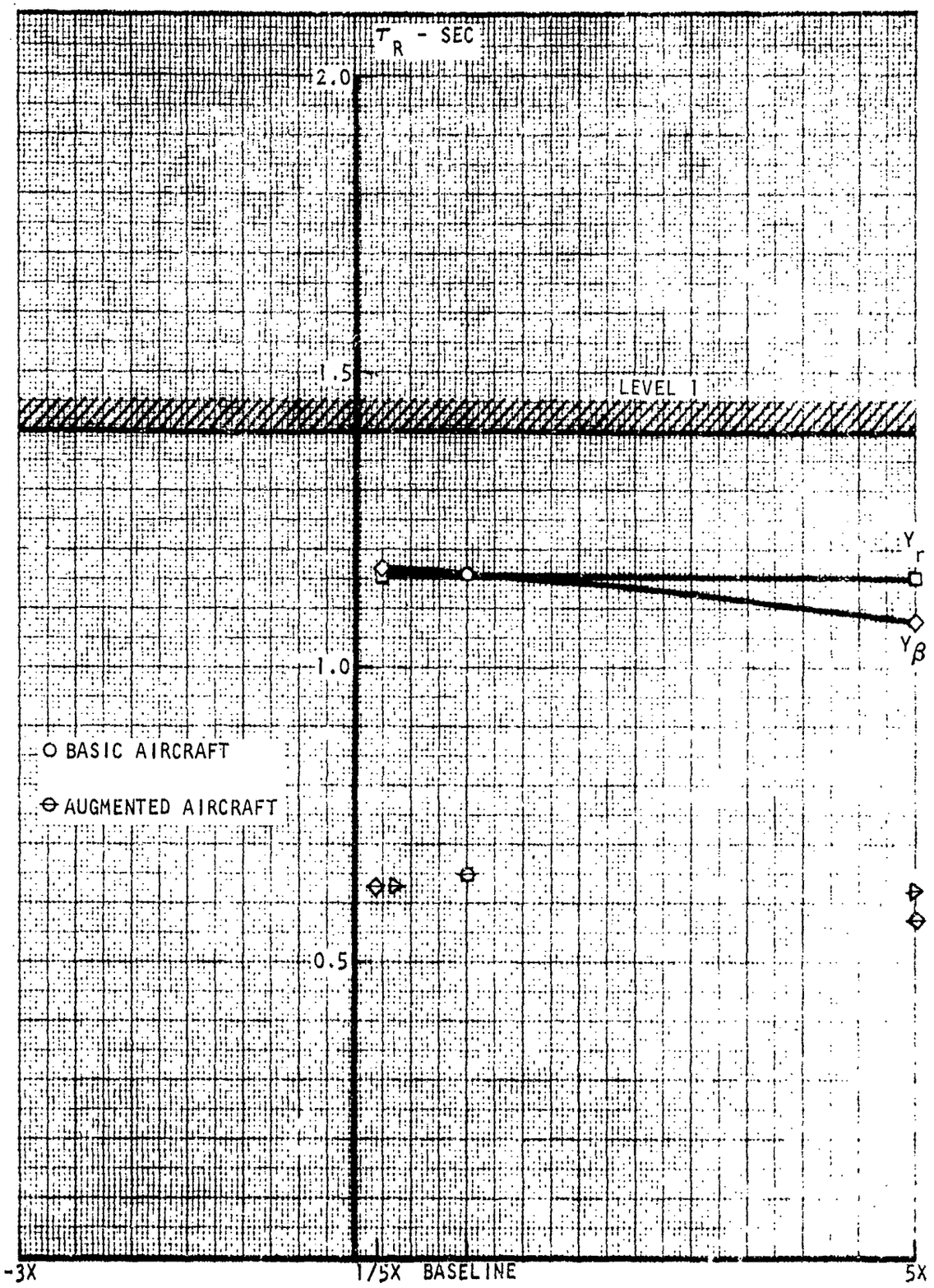

Figure 35. Effect of Side Force Coefficient Variation on Roll Time Constant

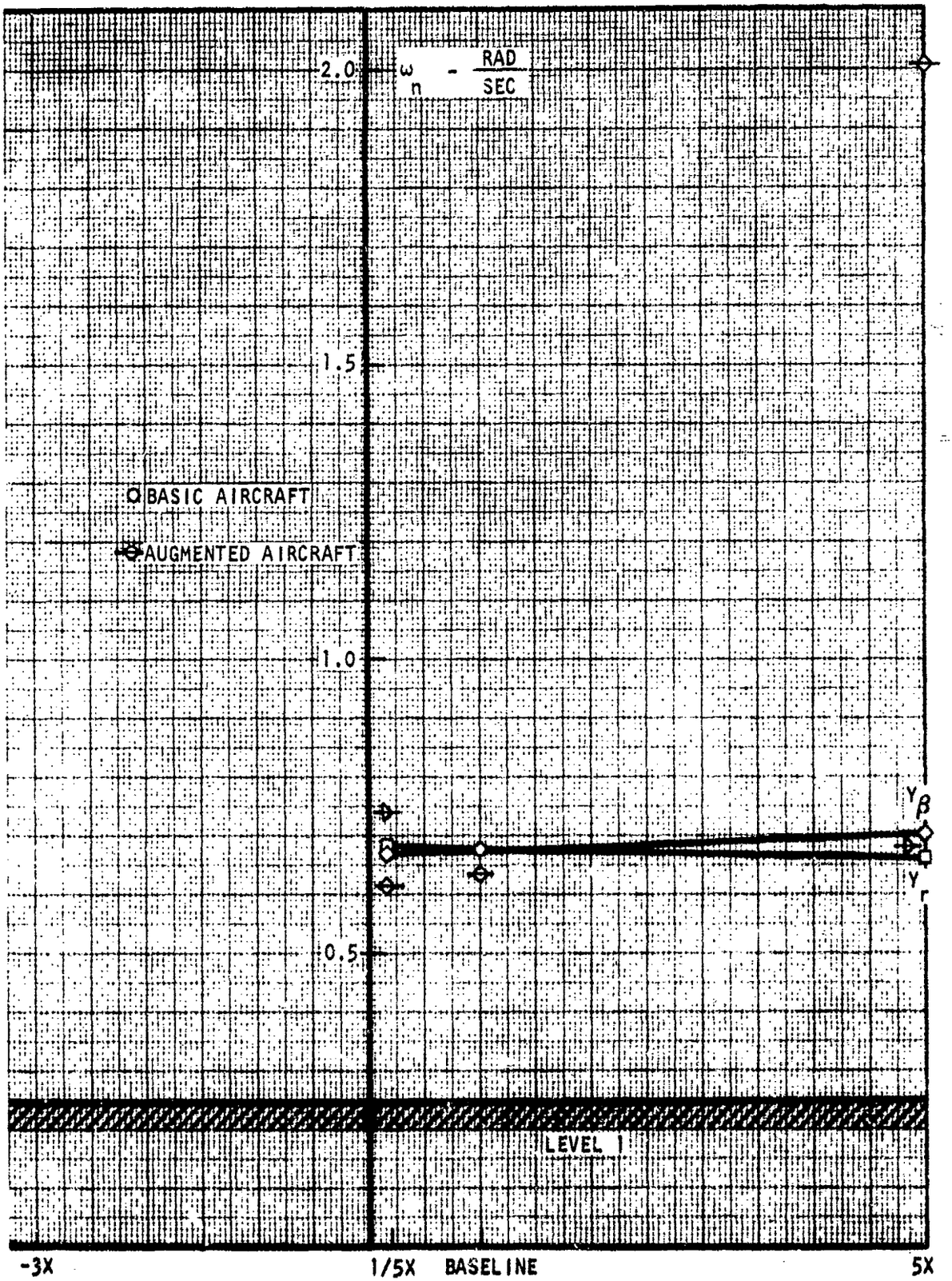

Figure 36. Effect of Side Force Coefficient Variation on Dutch Roll Natural Frequency

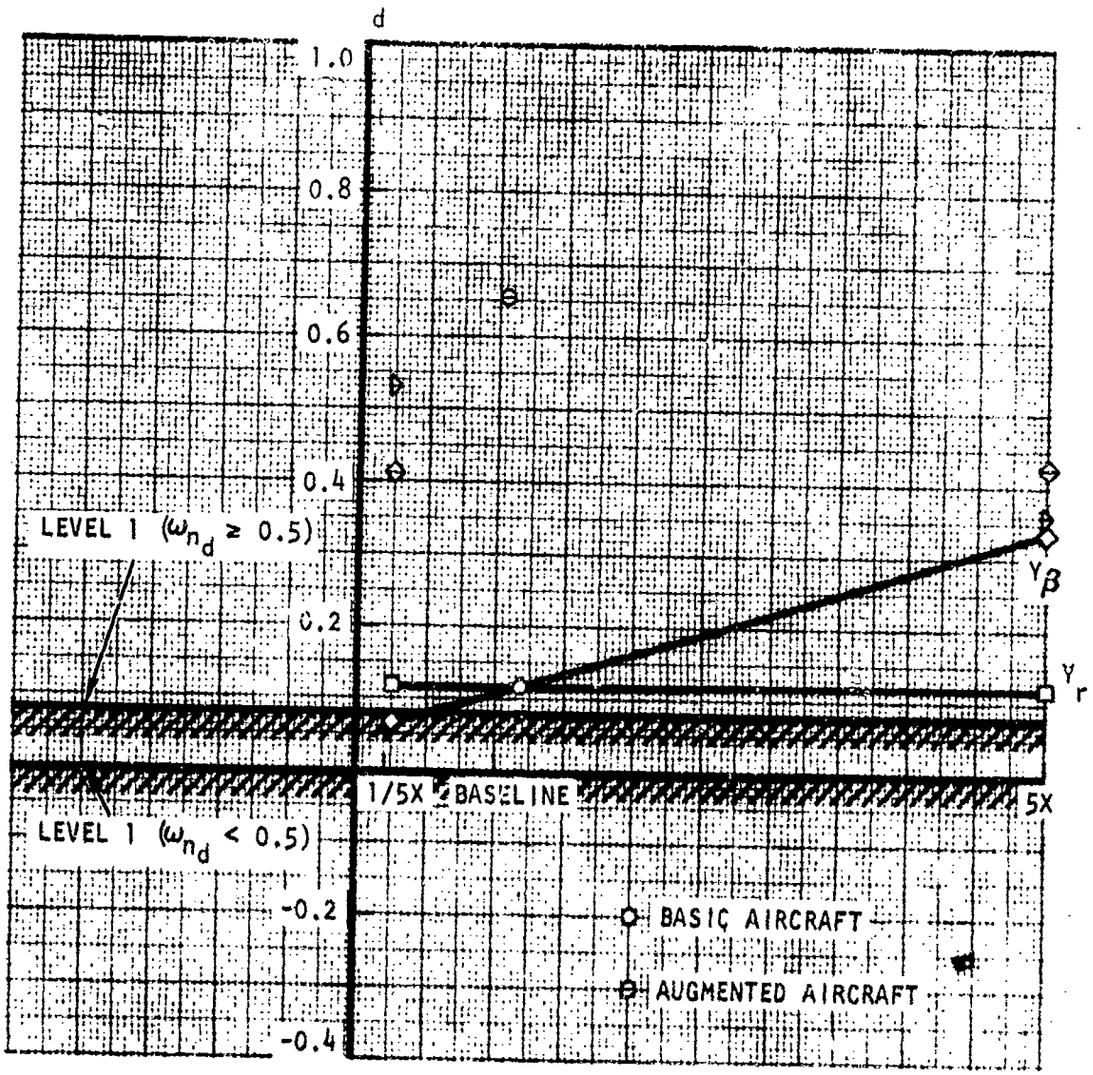

Figure 37. Effect of Side Force Coefficient Variation on Dutch Roll Damping

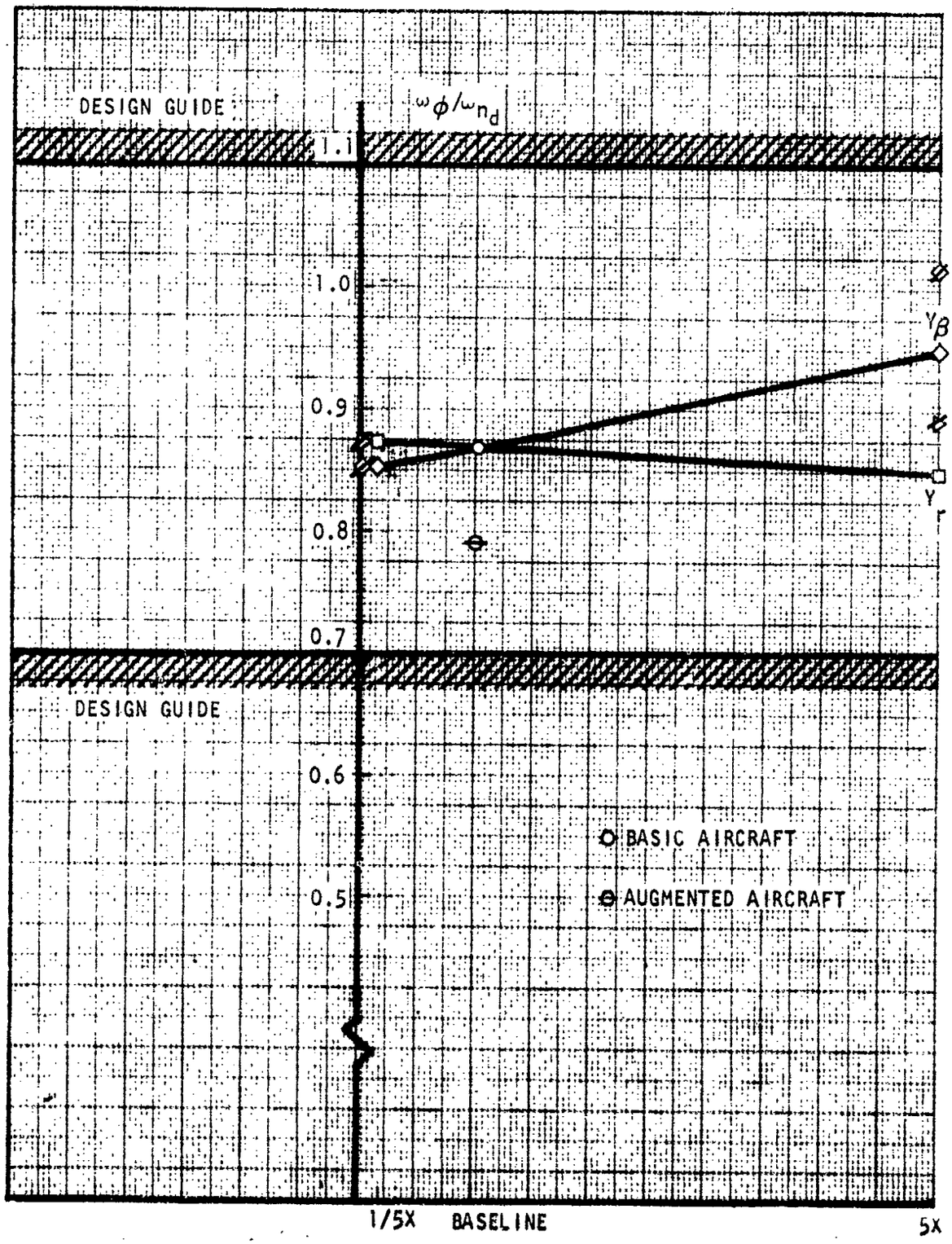

Figure 38. Effect of Side Force Coefficient Variation on ω_ϕ/ω_{n_d}

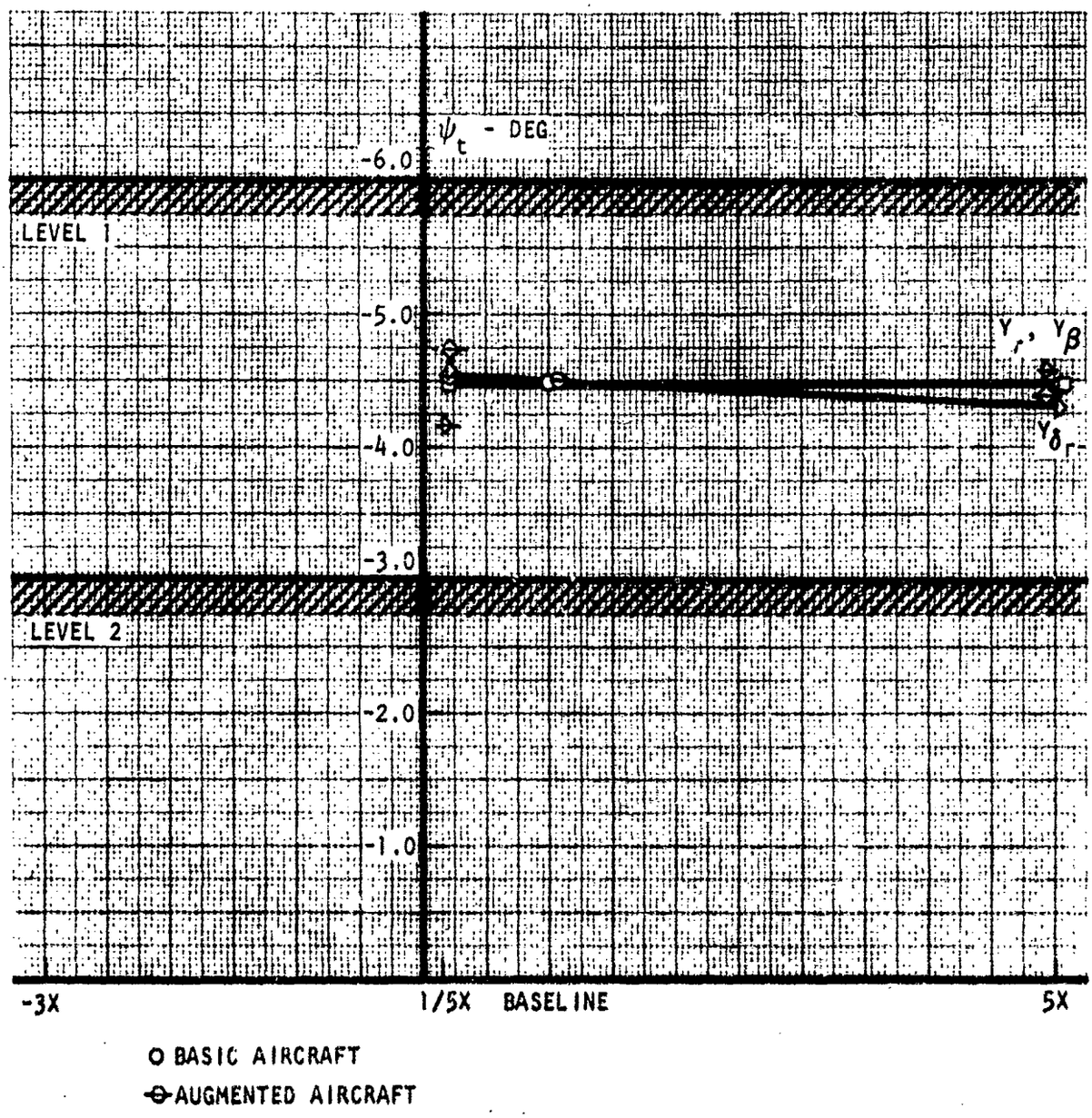

Figure 39. Effect of Side Force Coefficient Variation on ψ_t

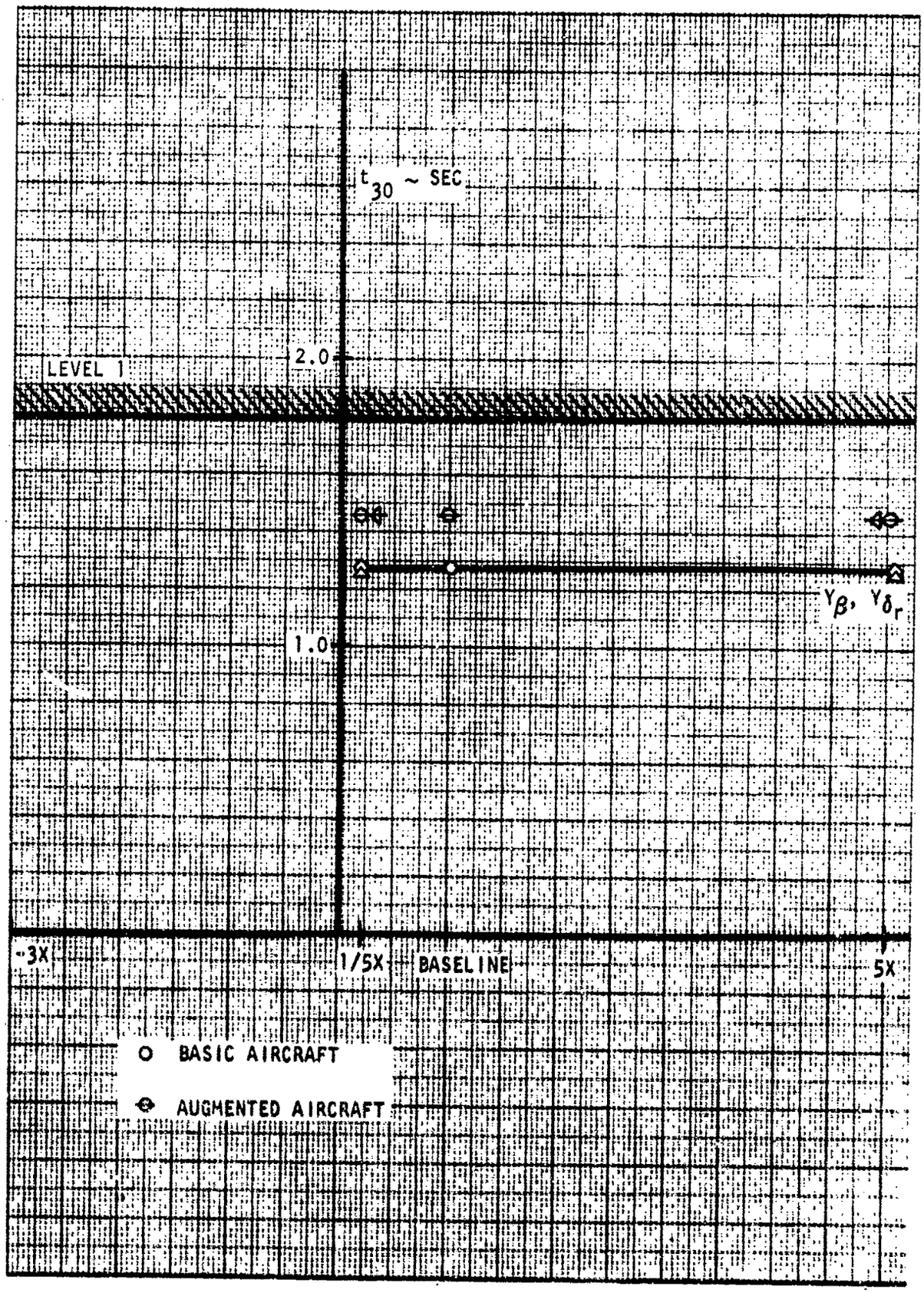

Figure 40. Effect of Side Force Coefficient Variation on t_{30}

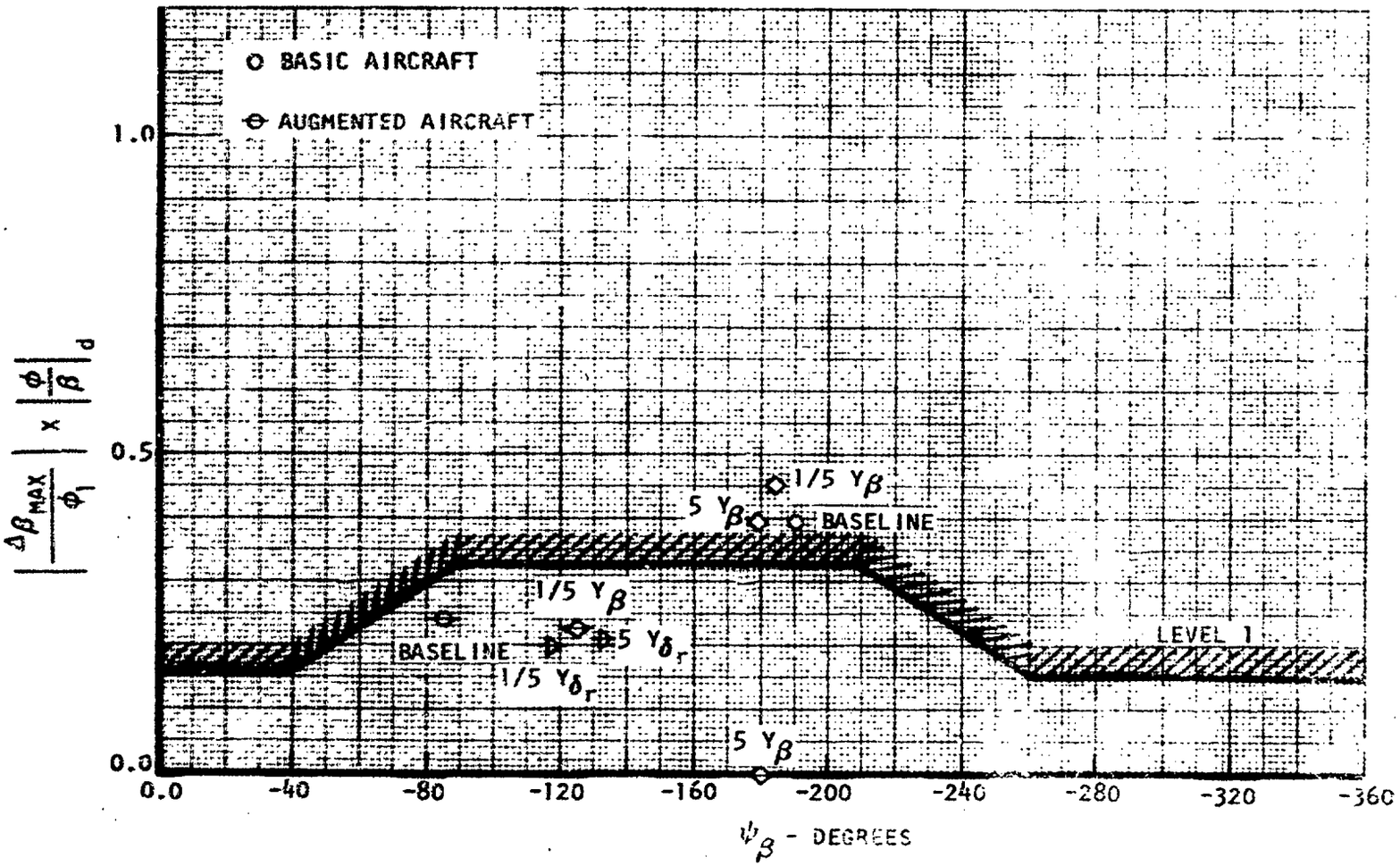

Figure 41. Effect of Side Force Coefficient Variation on $|\Delta\beta/\phi_1| \times |\phi/\beta|_d$

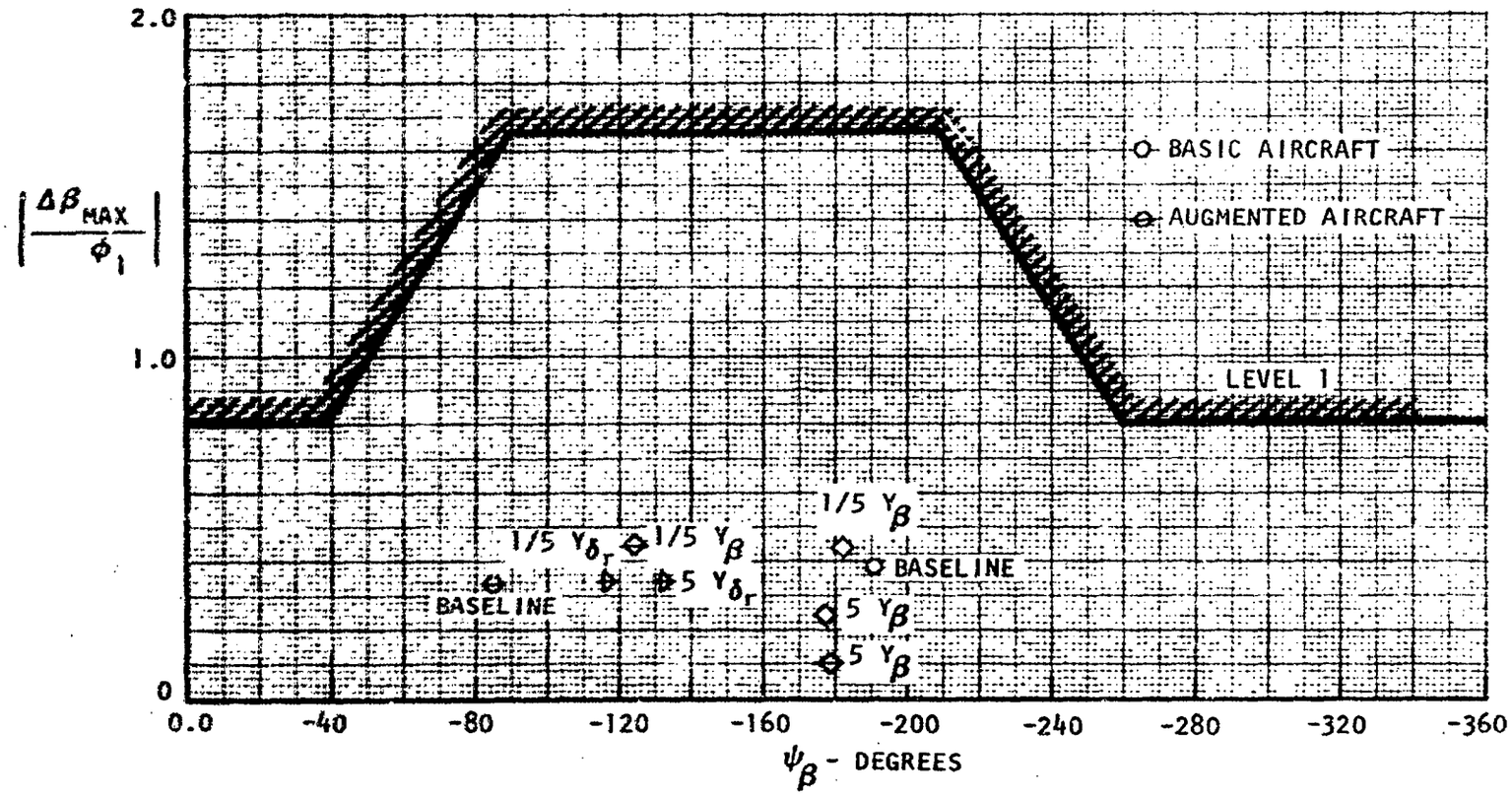

Figure 42. Effect of Side Force Coefficient Variation on $|\Delta\beta/\phi_1|$

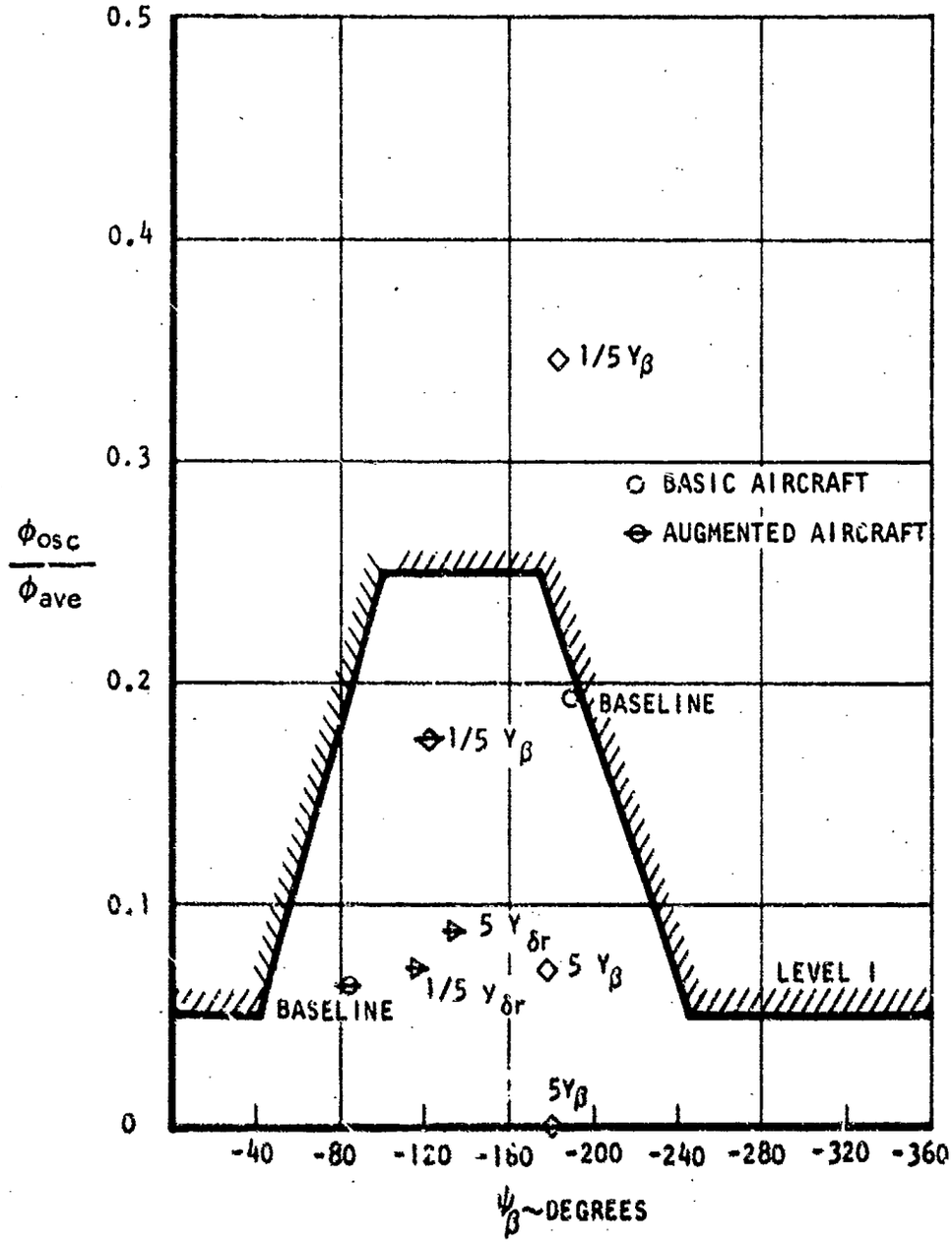

Figure 43. Effect of Side Force Coefficient Variation on $\frac{\phi_{osc}}{\phi_{ave}}$

$V/g \; Y_\beta$: baseline value = -0.36

Variation in Y_β , the side force damping coefficient, indicates primary influence of the coefficient on the dutch roll damping and ϕ_{osc}/ϕ_{AV} responses for the basic aircraft. Increasing values of Y_β improve both dutch roll and ϕ_{osc}/ϕ_{AV} characteristics.

Baseline augmentation proved insufficient to satisfy all attainable level 1 requirements for both the largest value of Y_β analyzed, 5.0 times the baseline, and the smallest value of Y_β analyzed, 0.2 times the baseline value. For the largest value of Y_β only a minor adjustment in the yaw rate feedback gain into roll augmentation was required to satisfy spiral mode time constant requirements. For the smallest value of Y_β , it was necessary to adjust yaw augmentation gains in order to achieve satisfactory ϕ_{osc}/ϕ_{AV} responses. With revised augmentation all values of Y_β studied satisfied all attainable level 1 requirements.

$V/g \; Y_{\delta_r}$: baseline value = 0.233

Variation in Y_{δ_r} has very little effect on lateral-directional dynamics for the basic aircraft. However, with augmentation operating it has a large effect on the aircraft's dynamic response with yaw augmentation on. Increasing values of Y_{δ_r}, increase the amount of sideslip generated with yaw augmentation. For the largest value of Y_{δ_r} analyzed, 5.0 times the baseline value, adjustments to the yaw augmentation gains were necessary because the high sensitivity of the baseline gains drove the system unstable. For the smallest value of Y_{δ_r} analyzed, 0.2 times the baseline value, baseline augmentation was sufficient to provide satisfactory responses.

$V/g \; Y_r$: baseline value = 0.090

Variations in this coefficient from 0.2 times to 5.0 times the baseline value with the unaugmented vehicle had very little effect on $1/\tau_S$, τ_R, ω_n, ζ_d, ω_ϕ/ω_n, and ψ_t. These data are shown in Figures 34 through 39. As a result, no additional data for variations in this coefficient were analyzed with either the unaugmented or augmented cases.

TIME HISTORY DATA

Time history cathode-ray tube plots (CRT) for the lateral-directional parameter variations are documented in Reference 3. These data were generated using the digital simulation program described in Section II of this volume. Time histories generated in this fashion were used to

establish certain handling qualities parameters documented herein.

The parameters obtained from these time histories include t_{30}, ϕ_{osc}/ϕ_{AV} $|\Delta\beta_{max}/\phi_1|$, and $|\Delta\beta/\phi_1| \times |b/\beta|_d$. In addition, these time histories were used to correlate 3 DOF Matrix solution flying qualities parameters such as frequency, damping, and time constants with those of the 6 DOF time histories.

The time histories required to satisfy requirements in Reference 1 include those for unaugmented aircraft wheel step inputs and both unaugmented and augmented wheel impulse inputs.

The time response to pedal step inputs (ψ_t) and those for augmented wheel step inputs (t_{30}) were also obtained using the 6 DOF digital simulation program. The data obtained for these parameters were read directly from computer print out tabulations and no CRT plots were generated. Because of their bulk, and the large number of data runs, these data have not been published in any document. The results of this analysis, however, are tabulated in the column for ψ_t and t_{30} of Tables V and VI.

A description of the form in which the aerodynamic derivatives are used in the 6 DOF digital simulation program is given in Reference 4. The aerodynamic derivatives for the MST are given in Volume V-II.

LONGITUDINAL PARAMETER VARIATION DATA

As in the case of the lateral-directional coefficient variations the maximum and minimum longitudinal coefficient [illegible] were selected to satisfy the requirements of the stated s[illegible]tives.

A tabular listing of the flying qualities parameters for each coefficient value is presented in Table VII and include both unaugmented and augmented configurations. The results of the analysis of these data are presented in the following pages. Table VIII defines the plotting symbols used in the presentation of the following longitudinal coefficient data.

TABLE VIII - DEFINITION OF PLOTTING SYMBOLS IN PRESENTATION OF LONGITUDINAL COEFFICIENT VARIATION DATA

- ○ Unaugmented baseline case
- □ Unaugmented M_V, X_V, Z_V
- ◇ Unaugmented M_α, X_α, Z_α
- ◁ Unaugmented $M_{\dot\alpha}$
- ▷ Unaugmented M_q
- △ Unaugmented $M_{\delta_{II}}$, $X_{\delta_{II}}$, $Z_{\delta_{II}}$
- ▽ Unaugmented M_{δ_e}, Z_{δ_e}
- ⊖ Baseline augmented coefficient variation
- Ø Revised augmented coefficient variation

TABLE V. BASIC AIRCRAFT LATERAL-DIRECTIONAL COEFFICIENT VARIATION RESPONSES

Coefficient	Value	ζ_s	ζ_d	ω_n	ω_d	τ_d	τ_s/τ_d	t_{50} sec.	ϕ_t deg.	$\Delta\beta_{max.}$	ψ_2	ϕ_1	$\frac{\phi_{osc}}{\phi_{ave}}$	$\frac{\Delta\beta_{max.}}{\phi_1}$	$\left\lvert\frac{\phi}{\beta}\right\rvert_d$	$\frac{\Delta\beta_{max}}{\phi_1}\times\left\lvert\frac{\phi}{\beta}\right\rvert_d$
[illegible]		[illegible]	1.365	0.662	0.6774	0.1155	[illegible]	1.286	4.48	9.6°	-192.1°	24.0°	0.195	0.40	0.952	0.386
β	L_β	[illegible]	[illegible]	0.288	0.688	0.2156	0.2931	0.9178	2.156	4.56	1.95°	-153.4°	5.1°	0.079	0.382	0.867	0.255
$\dot{\beta}/2$	$L_{\dot\beta}$	[illegible]	[illegible]	1.641	0.677	[illegible]	[illegible]	0.9411	1.176	4.45	22.0°	-206.4°	60.0°	0.313	0.367	2.424	0.890
β	L_r	[illegible]	1.560	1.0350	0.6538	0.8326	0.9527	0.7152	1.168	5.13							
$\dot{\beta}/2$	$L_{\dot r}$	0.199	[illegible]	1.251	0.626	0.6235	0.0790	0.9386	1.313	4.56	7.5°	-155.9°	20.4°	0.366	0.368	1.071	0.394
β	L_p	[illegible]	[illegible]	1.27	0.626	0.6675	[illegible]	0.914	1.438	3.95	3.8°	-120.4°	10.2°	7.065	0.373	2.26	0.843
β	$L_{\dot p}$	[illegible]	[illegible]	0.628	0.906	0.550	[illegible]	[illegible]	1.269	4.63	6.0°	-163.9°	18.0°	15.35	0.333	3.429	1.142
$\dot{\beta}/2$	$L_{\dot p}$	[illegible]	1.292	1.297	0.655	0.6709	[illegible]	0.8551	1.265	4.45							
β	$L_{\beta_{cg}}$	[illegible]	1.650	0.667	0.926	0.6182	0.5174	[illegible]	1.283	4.33							
β	$L_{\beta_{cg}}$	0.045	1.365	1.365	0.662	0.6774	0.1155	0.8326	0.619	4.48	42.5°	-180.5°	210.0°	0.189	0.386	1.833	0.708
$\dot{\beta}/2$	$L_{\dot\beta_{cg}}$	[illegible]	1.365	1.365	0.662	0.6774	0.1155	0.9242	1.845	4.48	2.2°	-211.5°	6.0°	0.159	0.367	2.125	0.78
β	$L_{r_{cg}}$	1.042	1.365	1.365	0.662	0.6774	0.1155	0.8654	1.286	2.47							
$\dot{\beta}/2$	$L_{\dot r_{cg}}$	[illegible]	1.365	1.365	0.662	0.6774	0.1155	0.8654	1.286	4.88							
β	$L_{p_{cg}}$	1.491	1.365	1.365	0.662	0.6774	0.1155	0.8654	1.286	6.48							
β	N_β	[illegible]	[illegible]	1.224	0.406	0.8329	0.2165	1.2766	1.255	4.34							
$\dot{\beta}/2$	$N_{\dot\beta}$	[illegible]	1.049	0.854	0.749	[illegible]	0.2973	0.8195	1.297	4.51	9.1°	-178.0°	20.0°	0.186	0.455	1.040	0.473
β	N_r	[illegible]	[illegible]	0.899	0.919	[illegible]	[illegible]	0.8329	1.377	4.68	9.2°	-149.0°	12.0°	0.476	0.766	0.94	0.720
β	N_p	[illegible]	[illegible]	1.389	0.419	0.4315	0.1917	1.5805	1.307	3.48	10.8°	-114.9°	13.7°	9.333	0.548	1.385	0.759
$\dot{\beta}/2$	$N_{\dot p}$	[illegible]	1.365	1.365	0.662	0.6905	0.0967	0.8324	1.280	4.73							
β	$N_{\dot\beta}$	1.643	1.362	1.883	1.541	1.330	0.1307	0.9374	1.265	3.92							
$\dot{\beta}/2$	$N_{\dot\beta}$	[illegible]	[illegible]	1.389	0.472	0.8665	-0.1551	0.6715	1.286	4.69	14.0°	-148.1°	25.0°	9.657	0.609	1.875	1.142
β	$N_{\beta_{cg}}$	[illegible]	1.365	1.365	0.662	0.6774	0.1155	0.9242	1.240	4.48	11.0°	-199.9°	30.0°	0.158	0.367	1.14	0.419
$\dot{\beta}/2$	$N_{\dot\beta_{cg}}$	[illegible]	1.365	1.365	0.662	0.6774	0.1155	0.7525	1.296	4.48	9.2°	-176.6°	23.0°	0.165	0.400	1.11	0.444
β	$N_{r_{cg}}$	[illegible]	1.365	1.365	0.662	0.6774	0.1155	0.7961	1.337	4.48	8.2°	-157.2°	19.0°	0.200	0.432	0.835	0.361
β	$N_{p_{cg}}$	[illegible]	1.365	1.365	0.662	0.6774	0.1155	0.8654	1.286	23.55							
$\dot{\beta}/2$	$N_{\dot p_{cg}}$	[illegible]	1.365	1.365	0.662	0.6774	0.1155	0.8654	1.286	0.46							
β	Y_β	[illegible]	1.367	1.362	0.667	[illegible]	[illegible]	0.8356		4.48							
$\dot{\beta}/2$	$Y_{\dot\beta}$	[illegible]	1.425	1.366	0.655	[illegible]	[illegible]	[illegible]		[illegible]							
β	Y_p	[illegible]	[illegible]	1.067	0.567	[illegible]	[illegible]	0.9169	1.786	4.49	[illegible]	-178.0°	25.0°	0.0715	0.270	1.48	0.400
$\dot{\beta}/2$	$Y_{\dot p}$	[illegible]	1.365	1.178	0.674	0.6726	[illegible]	[illegible]	1.284	[illegible]	10.5°	-183.1°	25.0°	0.346	0.456	1.00	0.456
β	$Y_{\beta_{cg}}$	[illegible]	1.365	1.365	0.662	0.6774	[illegible]	0.8654	1.286	4.33							
$\dot{\beta}/2$	$Y_{\dot\beta_{cg}}$	[illegible]	1.365	1.365	0.662	0.6774	[illegible]	0.8654	1.286	4.51							

NOTE: Parentheses indicate stable spiral mode [illegible] constant.

TABLE VI. AUGMENTED AIRCRAFT LATERAL-DIRECTIONAL COEFFICIENT VARIATION RESPONSES

Coefficients	Value	ζ	ω	ω_n	ω_d	t	$\frac{\omega_n}{\omega}$	$\frac{\omega_n}{\omega_{ave.}}$	t_1 (deg. (1))	t_1 (deg. (2))	$\phi_{max.}$	t_1	ϕ_1	$\frac{\phi_{max.}}{\phi_{ave}}$	$\frac{\phi_{max.}}{\phi_1}$	$\frac{\phi_1}{\phi_{max.}}$	$\frac{\phi_{max.}}{\phi_1}\left(\frac{t}{\tau}\right)_d$
BASELINE		0.167	0.6640	0.639	0.6750	0.00075	0.7648	1.402	4.45	3.15	3.69°	11.0°	-84.5°	0.1628	0.335	0.735	0.245
δ_a L_p	1.277	3.87	0.892	0.8763	0.8560	0.0[illegible]	0.802	1.46	4.34	3.29	4.90°	11.4°	-182.0°	0.134	0.356	0.69	0.102
δ_a/ζ L_p	0.532	16.482	0.607	0.8046	0.7045	0.5055	0.7630	1.325	4.36	3.23	5.45°	16.2°	-108.3°	0.143	0.356	0.92	0.309
δ_a L_r	1.982	12.083	0.267	0.370	0.1781	1.0670	1.8553	1.422	4.56	3.36	3.81°	11.1°	-91.0°	0.104	0.343	0.688	0.134
δ_a/ζ L_r	0.195	33.70	0.598	0.4128	0.3355	0.4128	1.638	1.678	4.50	3.26	2.55°	[illegible]	[illegible]	0.0476	0.331	0.667	0.121
δ_a L_β	7.892	390.7.30	0.7[illegible]	0.0591	0.4484	0.0065	0.7820	1.50	4.42		3.31°	10.2°	[illegible]	0.159	0.3245	0.437	0.148
δ_a L_β	5.715	36.155	0.6[illegible]	0.6256	0.5[illegible]	0.1[illegible]	0.7[illegible]	1.476	4.32		3.02°	10.6°	52.14°	0.0 34	0.3415	0.833	0.261
δ_a/ζ L_β	1.[illegible]	37.7[illegible]	0.6[illegible]	0.163	0.1[illegible]	1.132	2.90[illegible]	1.876	4.42	3.21	3.05°	11.5°	-46.1°	0.0	0.343	=0.0	0.0
δ_a L_{δ_a}	0.[illegible]	32.[illegible]	0.639	0.6[illegible]	0.4[illegible]	0.[illegible]	0.4[illegible]	1.468	4.45		3.72	11.4°	-88.[illegible]	0.0556	0.326	0.867	0.283
δ_a/ζ L_{δ_a}	0.0[illegible]	32.[illegible]	0.4[illegible]	0.[illegible]	0.1[illegible]	0.[illegible]	0.7[illegible]	1.069	4.49	3.25	18.2°	54.0°	36.[illegible]	0.0589	0.337	0.831	-0.280
δ_a L_{δ_r}	2.442	32.332	0.4[illegible]	0.[illegible]	0.1[illegible]	0.2975	0.7[illegible]	1.126	4.47	3.21	2.[illegible]	9.1°	-[illegible]	[illegible]	0.297	[illegible]	0.333
δ_a/ζ L_{δ_r}	0.0277	60.456	0.4[illegible]	0.5[illegible]	0.4[illegible]	0.2[illegible]	0.6124	1.257	3.77		3.60°	16.8°	-59.1°	0.0455	0.333	0.735	0.245
δ_a L_{δ_g}	5.4[illegible]	32.[illegible]	0.8[illegible]	0.[illegible]	0.2[illegible]	0.0[illegible]	0.5[illegible]	1.496	4.76	3.46	3.60°	16.6°	-98.4°	0.104	0.340	[illegible]	[illegible]
δ_a/ζ L_{δ_g}	0.3[illegible]	67.237	0.482	0.185	0.1[illegible]	0.[illegible]	0.7[illegible]	1.453	5.21		3.75°	11.1°	-95.5°	0.0725	0.338	0.733	0.248
δ_a L_{δ_a}	0.0[illegible]	32.136	0.4[illegible]	0.4[illegible]	0.4[illegible]	0.[illegible]	0.5[illegible]	1.402	4.34	3.15	4.0°	13.9°	-114.[illegible]°	0.[illegible]	0.286	[illegible]	0.202
δ_a/ζ L_{δ_a}	0.3[illegible]	60.[illegible]	0.6[illegible]	0.5[illegible]	0.2[illegible]	0.0[illegible]	0.7[illegible]	1.[illegible]	4.52	3.27	3.67°	10.5°	-79.4°	0.061	0.350	0.80	[illegible]
δ_a L_{δ_r}	1.163	(147.3)	0.3[illegible]	0.4[illegible]	0.2[illegible]	0.7[illegible]	0.490	1.[illegible]	3.54		3.77°	8.1°	-62.3°	0.117	0.465	0.416	
δ_a/ζ L_{δ_r}	0.6[illegible]	30.232	0.7[illegible]	0.6[illegible]	0.5[illegible]	0.0[illegible]	0.7[illegible]	1.[illegible]	2.63	2.69	2.68°	6.6°	-59.5°	0.119	0.405	0.553	
δ_a L_{δ_g}	2.[illegible]	(157.1[illegible])	0.6[illegible]	1.3[illegible]	1.0[illegible]	0.6[illegible]	0.9[illegible]	1.[illegible]	4.09	3.39	3.48°	10.9°	-90.4°	0.0686	0.319	0.408	
δ_a/ζ L_{δ_g}	0.0[illegible]	43.[illegible]	0.6[illegible]	0.4[illegible]	0.5[illegible]	0.5[illegible]	0.9[illegible]	1.285	3.67	2.88	2.18°	15.2°	-158.0°	-0.0	0.265	=0.0	
δ_a N_{δ_a}	0.0[illegible]	46.[illegible]	0.7[illegible]	0.4[illegible]	0.4[illegible]	0.[illegible]	0.7[illegible]	1.471	4.07	3.35	3.85°	10.75°	-97.4°	0.251	0.358	0.875	[illegible]
δ_a/ζ N_{δ_a}	0.[illegible]	32.[illegible]	0.6[illegible]	0.6[illegible]	0.4[illegible]	0.4[illegible]	0.6[illegible]	[illegible]	4.46	3.23	3.87°	11.5°	-85.4°	0.079	0.337	[illegible]	[illegible]
δ_a N_{δ_r}	-0.0[illegible]	57.[illegible]	0.6[illegible]	0.6[illegible]	0.4[illegible]	0.4[illegible]	0.6[illegible]	1.475	4.49	3.23	3.64°	10.8°	-86.5°	0.059	0.337	0.727	0.245
δ_a/ζ N_{δ_r}	2.775	36.[illegible]	0.6[illegible]	0.5[illegible]	0.4[illegible]	0.4[illegible]	0.7[illegible]	1.515	4.51	3.26	3.46°	10.2°	-84.5°	0.097	0.339	0.765	0.259
δ_a N_{δ_g}	0.[illegible]	(172.[illegible])	0.6[illegible]	0.7[illegible]	0.4[illegible]	0.7[illegible]	0.5[illegible]	1.517	14.06	11.65	3.25°	10.6°	-77.2°	0.093	0.307	0.910	0.279
δ_a/ζ N_{δ_g}	1.[illegible]	32.[illegible]	0.5[illegible]	2.[illegible]	1.[illegible]	0.4[illegible]	0.5[illegible]	1.446	0.56	0.397	4.10°	11.65°	-141.9°	0.142	0.352	0.857	0.295
δ_a Y_{δ_a}	0.[illegible]	5353.32	0.8[illegible]	0.6[illegible]	0.3[illegible]	0.4[illegible]	0.8[illegible]	1.476	4.34	3.22	1.38°	=11.0°	-179.4°	=0.0	0.124	-0.0	-0.0
δ_a/ζ Y_{δ_a}	0.[illegible]	(191.42)	0.5[illegible]	0.2[illegible]	0.5[illegible]	0.5[illegible]	0.8[illegible]	1.470	4.75	3.37	5.10°	11.1°	-123.8°	0.175	0.46	0.52	0.230
δ_a Y_{δ_r}	0.[illegible]	26.[illegible]	0.7[illegible]	0.7[illegible]	0.5[illegible]	0.5[illegible]	0.6[illegible]										
δ_a/ζ Y_{δ_r}	0.[illegible]	24.[illegible]	0.622	0.6[illegible]	0.4[illegible]	0.3[illegible]	0.6[illegible]	0.7[illegible]									
δ_a Y_{δ_g}	0.332	24.[illegible]	0.622	0.6[illegible]	0.4[illegible]	0.3[illegible]	0.6[illegible]	1.471	4.58	3.27	4.0°	11.2°	-132.3°	0.[illegible]	0.357	0.68	[illegible]
δ_a/ζ Y_{δ_g}	0.0225	37.[illegible]	0.6[illegible]	0.7[illegible]	0.4[illegible]	0.3[illegible]	0.5[illegible]	1.469	4.17	3.14	3.9°	1[illegible].1°	-117.0°	0.0725	0.351	0.571	[illegible]

Note: Parentheses indicate stable spiral mode time constants.

(1) at surface rate limits.

(2) Surface rate limits, δ_a + 30 deg/sec, δ_r + 50°/sec.

TABLE VII. SUMMARY OF LONGITUDINAL COEFFICIENT VARIATION RESPONSES-UNAUGMENTED AND AUGMENTED

	UNAUGMENTED AIRCRAFT RESPONSE						AUGMENTED AIRCRAFT RESPONSE					
COEFF	ω_{n_p}	ζ_p	$\omega_{n_{sp}}$	ζ_{sp}	$2\zeta_{sp}\omega_{n_{sp}}$	$(0.15\frac{n_z}{\alpha})^{1/2}$	ω_{n_p}	ζ_p	$\omega_{n_{sp}}$	ζ_{sp}	$2\zeta_{sp}\omega_{n_{sp}}$	$(0.15\frac{n_z}{\alpha})^{1/2}$
BASELINE	0.1905	0.0519	0.5594	1.2923	1.4458	0.5877	0.0781	0.2187	5.3726	0.9475	10.1810	0.5872
$10X_V$	0.1850	0.8125	0.5679	1.2853	1.4599	3.6153	0.0762	2.0677	5.3726	0.9475	10.1810	1.1423
$-5X_V$	0.1927	-0.4484	0.5579	1.2922	1.4418	1.0283	0.0845	0.1996	1.3273	0.8055	2.1386	1.0281
$5X_\alpha$	0.1999	0.1580	0.5534	1.2761	1.4125	0.3140	0.0890	0.8611	5.3725	0.9476	10.1816	0.3137
$-5X_\alpha$	0.1763	-0.1186	0.5679	1.3138	1.4922	1.0056	0.0295	0.0334	5.6262	0.9720	10.9370	1.0074
ZERO X_{δ_H}	0.1905	0.0519	0.5594	1.2923	1.4458	0.5893	0.0781	0.2187	5.3726	0.9475	10.1810	0.5893
$5X_{\delta_H}$	0.1905	0.0519	0.5594	1.2923	1.4458	0.5809	0.0781	0.2187	5.3726	0.9475	10.1810	0.5893
ZERO Z_V	0.1648	-0.0971	0.6092	1.2169	1.4827	4.2589	0.0747	0.2181	5.5767	0.9474	10.1880	4.2519
$100 Z_V$	1.1575	0.3107	0.3207	3.4690	2.2250	0.6929	0.1336	0.3163	4.2923	0.9395	8.0662	0.6929
ZERO Z_α	0.2165	-0.0332	0.1768	2.8455	1.0062	0.9661	0.0873	0.0257	5.4812	0.9412	10.3182	0.6915
$5Z_\alpha$	0.1782	-0.00073	1.2662	1.3272	3.3611	0.4345	0.0756	0.2207	3.9383	0.8865	6.9828	0.4341
ZERO Z_{δ_H}	0.1905	0.0519	0.5594	1.2923	1.4458	0.5865	0.0781	0.2187	5.3726	0.9475	10.1810	0.5865
$5Z_{\delta_H}$	0.1905	0.0519	0.5594	1.2923	1.4458	0.5919	0.0781	0.2187	5.3726	0.9475	10.1810	0.5919
ZERO Z_{δ_e}	0.1905	0.0519	0.5594	1.2923	1.4458	0.5861	0.0780	0.2185	5.4468	0.9915	10.8028	0.5861
$5Z_{\delta_e}$	0.1905	0.0519	0.5594	1.2923	1.4458	0.5934	0.0783	0.2193	5.0811	0.7565	7.6884	0.5934
$10M_V$	0.4483	-0.2227	0.7137	1.1667	1.6653	0.5940	0.2368	0.0764	5.3790	0.9475	10.1936	0.5936
$-10M_V$	0.4977	0.7987	0.6349*	0.5281	0.6706	0.5758	0.1648	0.0196	9.6013	0.5523	10.6148	0.5474
$5M_{\dot\alpha}$	0.2247	0.0886	0.4742	2.8171	2.6717	0.5877	0.0843	0.5148	6.3246	0.9186	11.6200	0.5871
$-5M_{\dot\alpha}$	0.1971	-0.5354	0.5407	-0.1778	-0.1923	0.5877	0.0592	0.1968	7.3570	0.6099	8.9740	0.5876
ZERO M_q	0.2633	-0.3461	0.4047	1.2574	1.0177	0.5877	0.0852	0.1728	4.7633	0.9983	9.5108	0.5871
$10 M_q$	0.0629	0.5312	1.6951	2.0853	7.0696	0.5877	0.0502	0.4937	9.0846	0.8770	15.9352	0.5870
$220 M_\alpha$	0.2568	-0.0116	2.0728	0.3550	1.4716	0.6102	0.2521	0.0233	2.1291	0.3343	1.4236	0.6092
$-10M_\alpha$	0.2198	0.3030	0.6922*	0.9624	1.3324	0.5865	0.0933	0.3241	5.6470	0.9705	10.9604	0.5841
ZERO M_{δ_H}	0.1905	0.0519	0.5594	1.2923	1.4458	0.5883	0.0781	0.2187	5.3726	0.9475	10.1810	0.9606
$5M_{\delta_H}$	0.1905	0.0519	0.5594	1.2923	1.4458	0.5870	0.0781	0.2187	5.3726	0.9475	10.1810	0.5870
ZERO M_{δ_e}	0.1905	0.0519	0.5594	1.2923	1.4458	0.5889	0.0780	0.2243	5.3742	0.9476	10.1852	0.5889
$5M_{\delta_e}$	0.1905	0.0519	0.5594	1.2923	1.4458	0.5870	0.0373	0.2826	10.7566	0.4710	10.1324	0.4983

*Indicates the existence of an unstable real short period root.

AXIAL FORCE COEFFICIENTS

Conformance of the aerodynamic coefficient variation study results with the short period requirements of Reference 1 are summarized in Figure 44. The data of this figure have been normilized to the level 1 limits in each axis and show the effect of parameter variations on the level 1 requirements for ω_{nsp} and ζ_{sp}.

These data show that in all cases, including the baseline configuration, the level 1 requirements were met with the baseline and/or revised augmented configurations. Only results of the final augmentation configurations are shown.

The data also show that in the case of the unaugmented configuration the level 1 requirements were met in the 5 X_α case. In all other cases including the baseline unagumented configuration, these requirements were not met in terms of the minimum short period frequency.

Figures 45 through 48 show the effect of axial force coefficient variations on ω_{nsp}, ζ_{sp}, ω_{np}, and ζ_p for the unaugmented, baseline augmented, and revised augmented aircraft. The effect of individual coefficient variations on phugoid as well as short period dynamics is discussed in greater detail below.

X_V : baseline value =-0.0329

Variation of X_V indicates primary influence of the coefficient on the phugoid damping. Increasing negative values of X_V tend to increase ζ_{ph} while positive values of X_V tend to lower ζ_{ph} and drive it unstable. Figure 48 shows the effect of X_V variation on ζ_{ph} for the basic aircraft, and Figure 49 shows the effect of X_V variation on the phugoid mode roots in the s-plane.

With baseline augmentation operating, the largest negative value of X_V investigated, 10 times the baseline value, had very satisfactory short period and phugoid mode responses. For the largest positive value of X_V investigated, -5 times the baseline value, baseline augmentation was incapable of stabilizing the unstable phugoid mode of the basic aircraft. In order to stabilize the phugoid mode an attitude-hold was introduced into the pitch augmentation system. The revised pitch augmentation for this case is shown in Figure 50. With proper feedback gains determined through root locus techniques, satisfactory longitudinal responses were obtained. Transfer functions for θ/X_c are given in Appendix III for the basic, baseline augmented, and revised augmented aircraft.

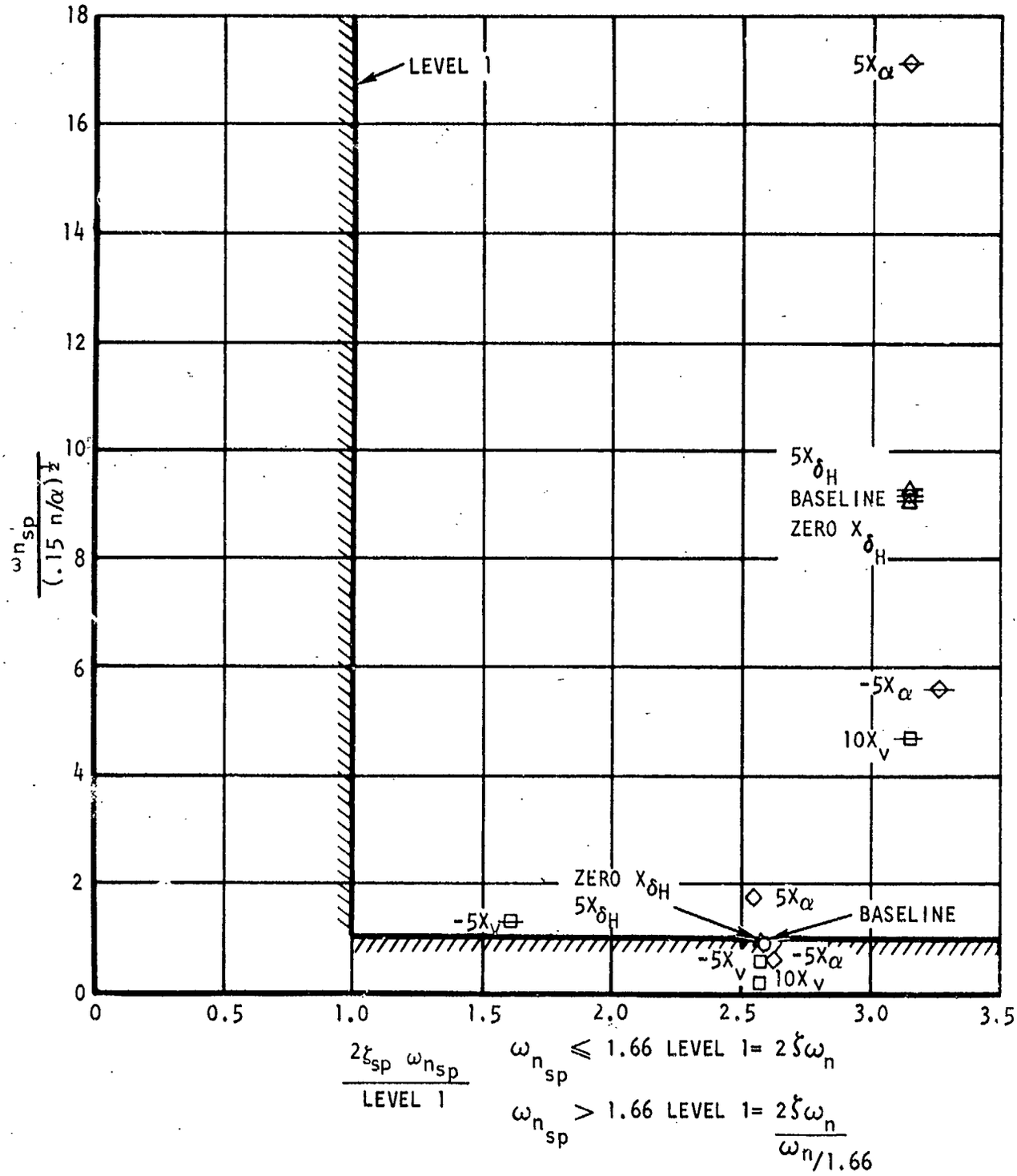

Figure 44. Short Period Dynamics for Axial Force Coefficient Variations

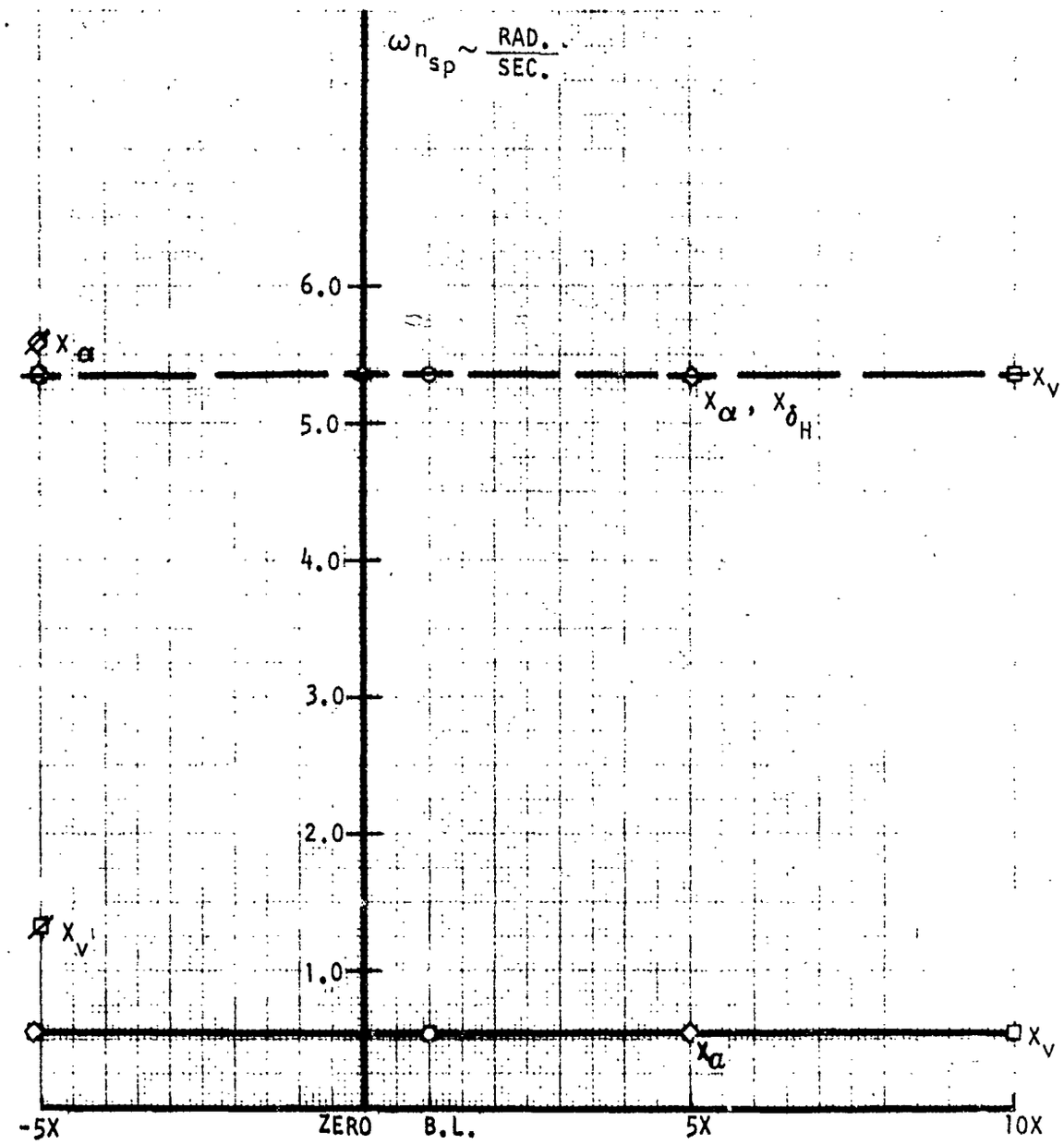

Figure 45. Effect of Axial Force Coefficient Variation on Short Period Natural Frequency

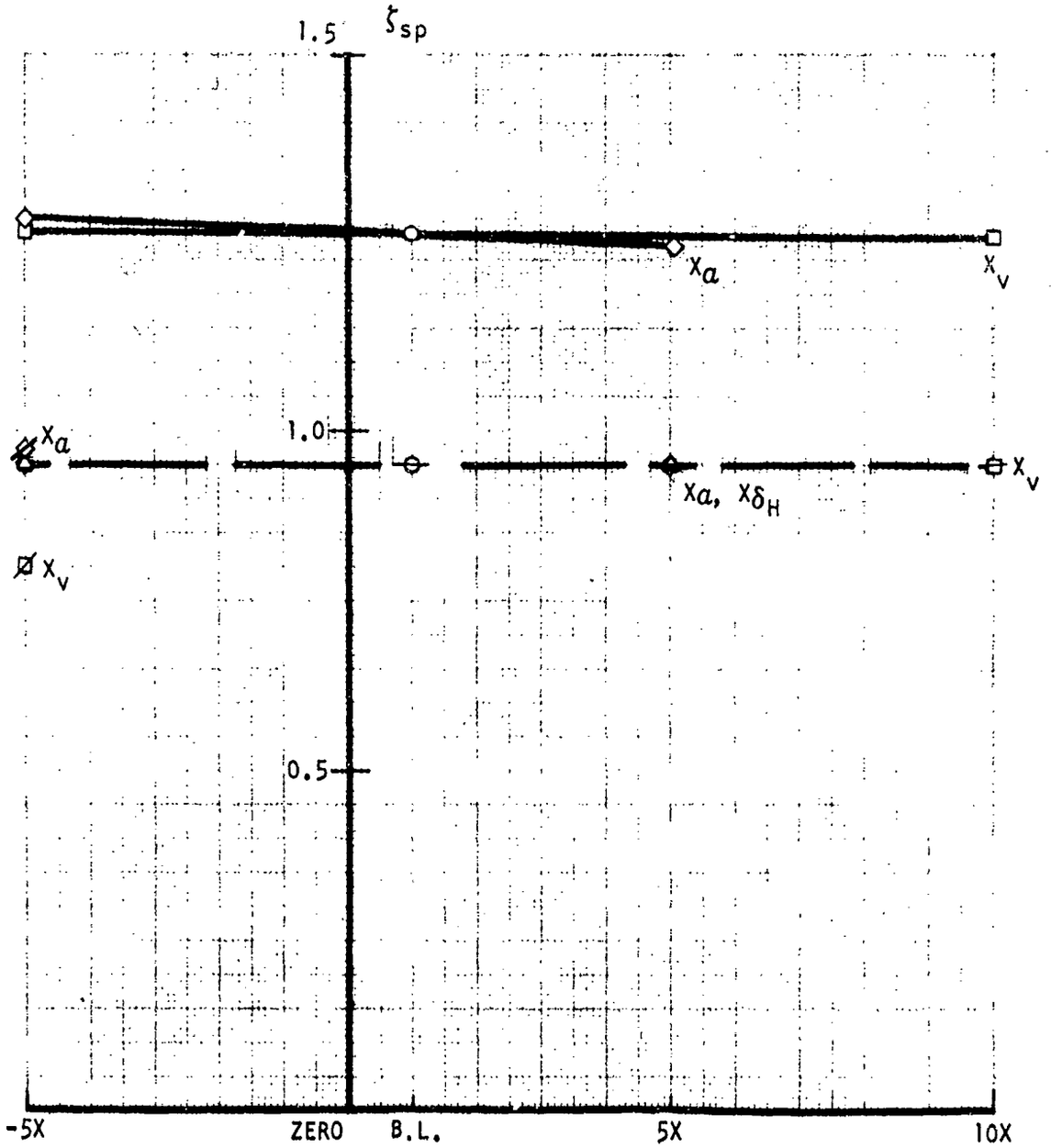

Figure 46. Effect of Axial Force Coefficient Variation on Short Period Damping Ratio

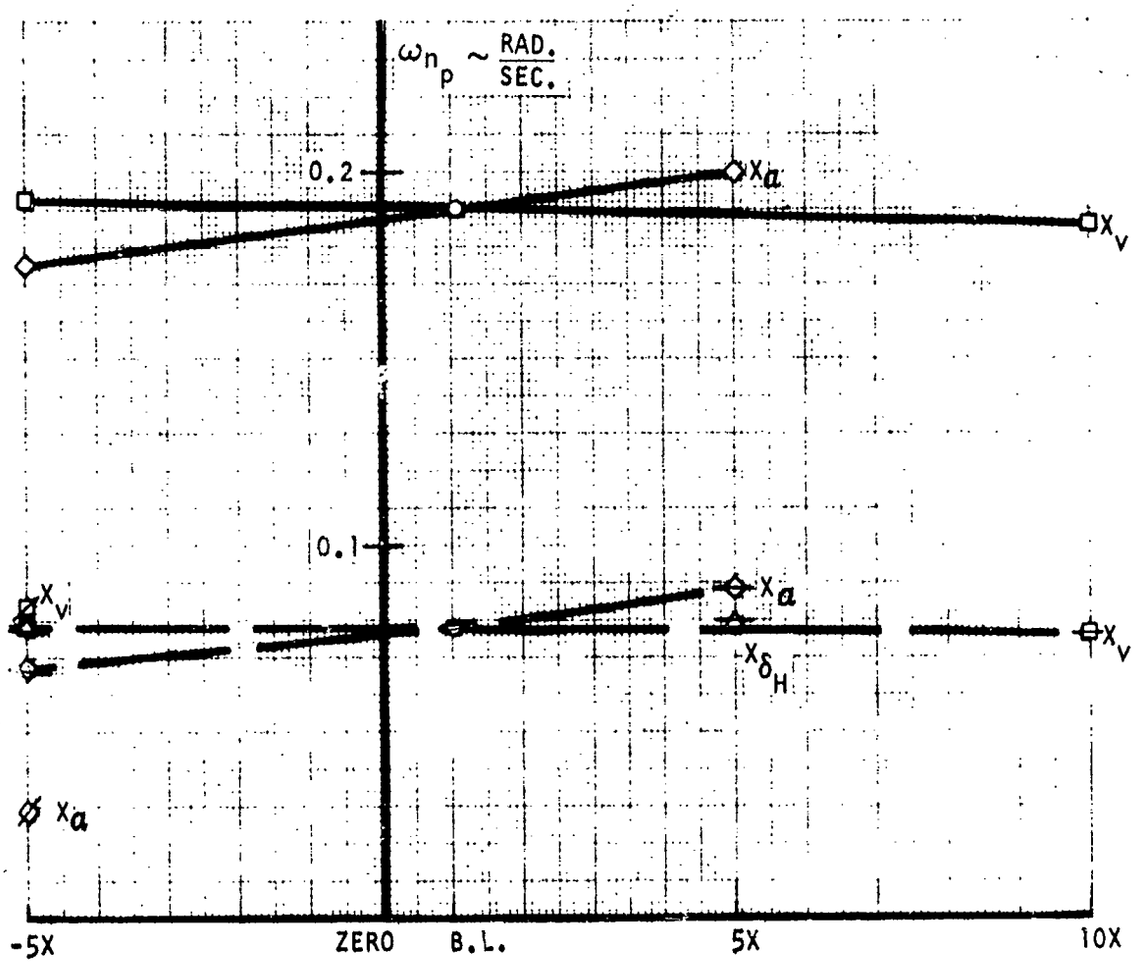

Figure 47. Effect of Axial Force Coefficient Variation on Phugoid Natural Frequency

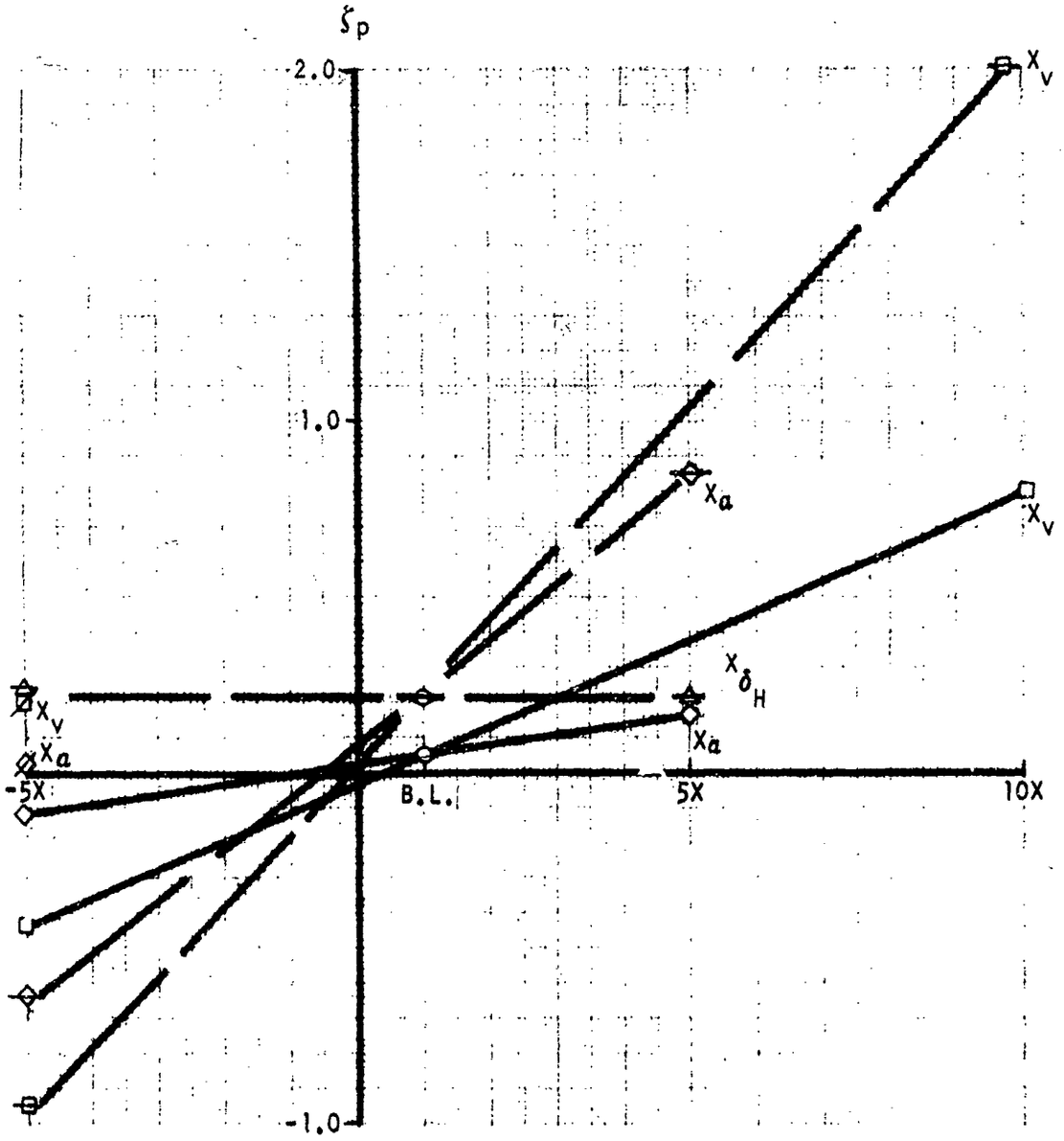

Figure 48. Effect of Axial Force Coefficient Variation on Phugoid Damping Ratio

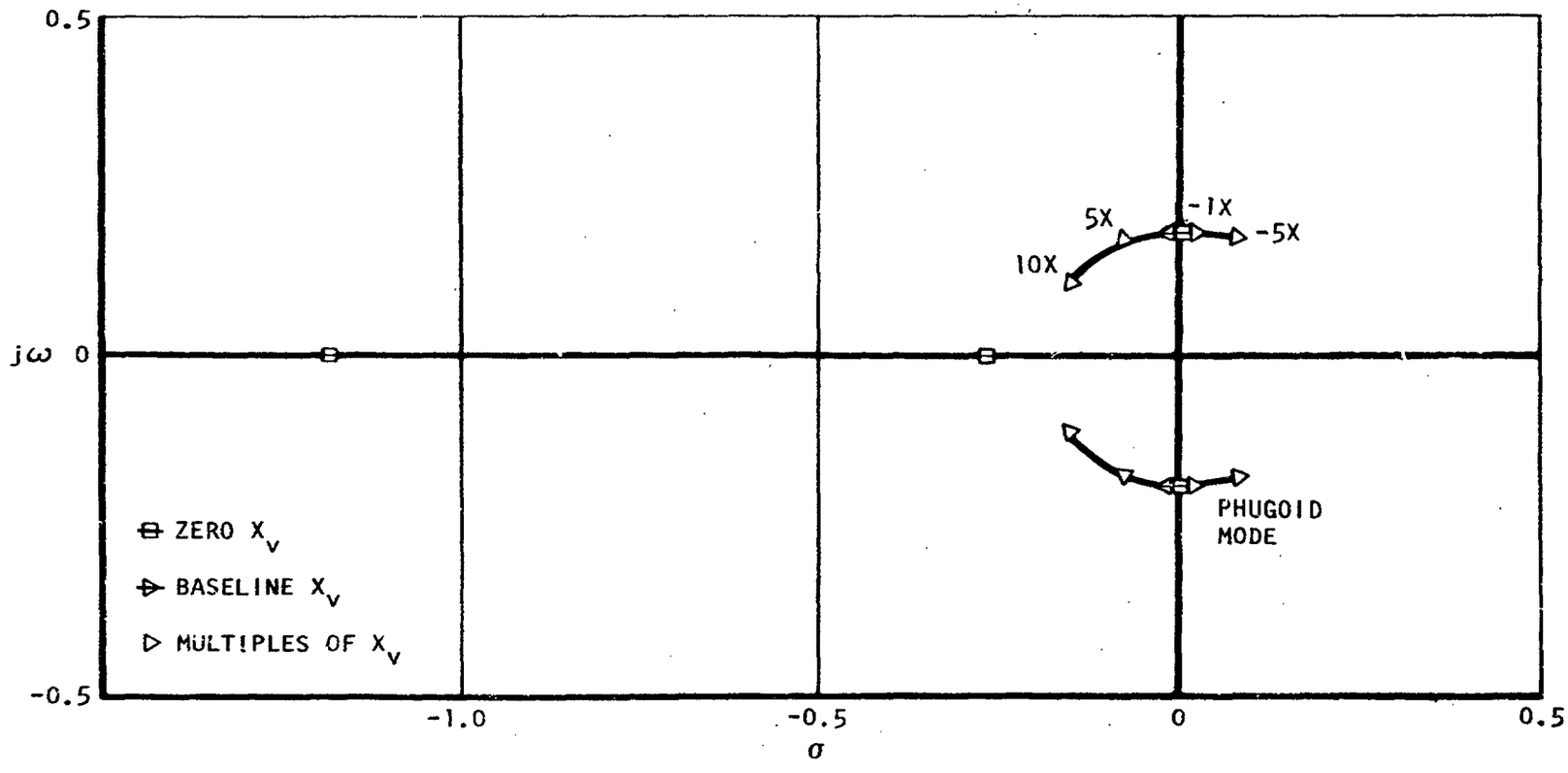

Figure 49. Effect of X_v Variation on Longitudinal Roots in S-plane for Unaugmented Aircraft

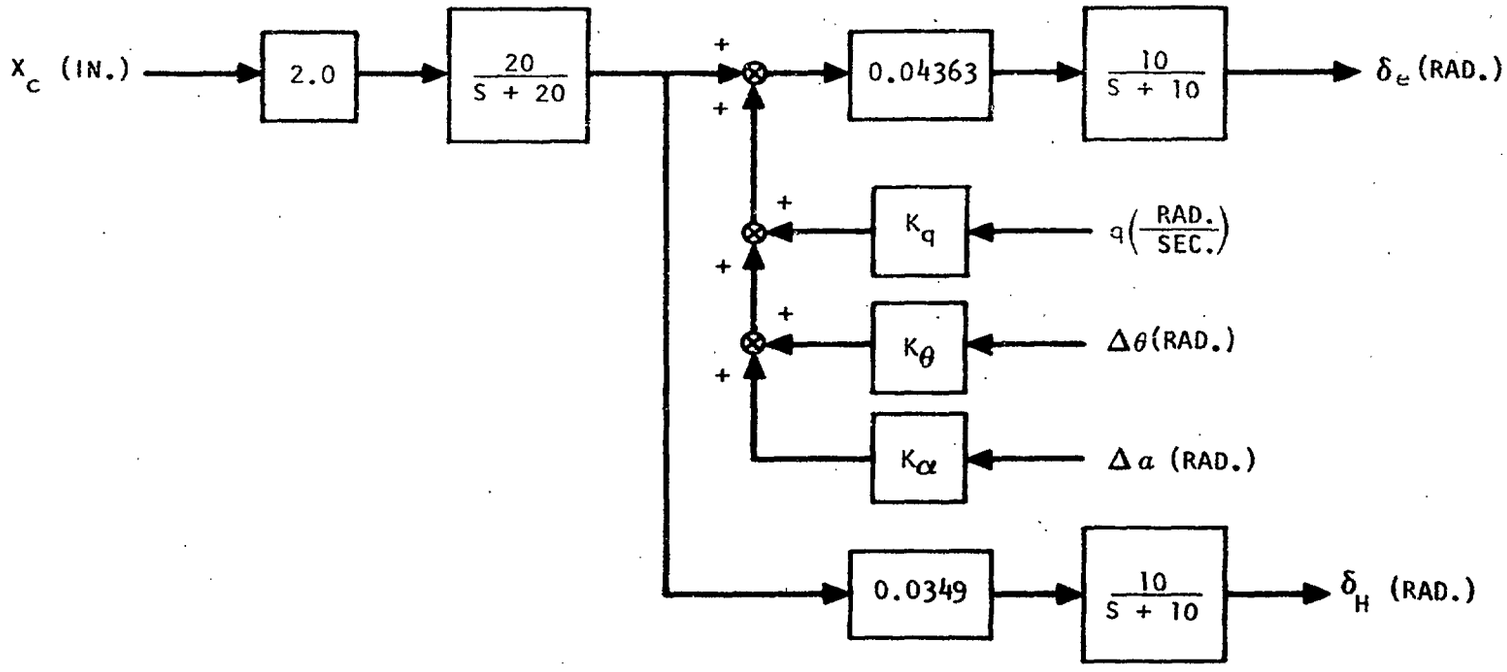

Figure 50. Longitudinal Axis Control and Augmentation System for $-5X_v$ Case

X_α : baseline value = 5.891

Variation of X_α indicates only a slight effect of the coefficient on the basic aircraft. However, due to the marginally stable damping of the phugoid mode for the baseline aircraft, large negative values of X_α may drive the phugoid damping unstable. The effect of varying X_α in the s-plane is shown in Figure 51 and indicates that variations in this coefficient result in negligible changes in ω_{np}.

With baseline augmentation operating, the largest negative value of X_α studied, -5 times the baseline value, indicated an unstable phugoid mode. In order to stabilize the phugoid mode, an attitude-hold loop consisting of a pitch attitude angle feedback was introduced into the pitch augmentation system. The revised pitch augmentation system is shown in Figure 52. With augmentation gains determined by root locus techniques, satisfactory short period and phugoid modes were attained. For the largest positive value of X_α studied, 5 times the baseline value, baseline augmentation was sufficient to provide satisfactory short period and phugoid mode responses. Transfer functions for θ/X_C are given in Appendix III for the basic, baseline augmented, and revised augmented aircraft for all variations of X_α studied.

$X_{\delta H}$: baseline value = -1.83

Variation in $X_{\delta H}$ has very little influence on longitudinal dynamic characteristics for both augmented and unaugmented configurations. As a result, both the unaugmented and baseline augmented aircraft provide satisfactory level 1 response characteristics for all values of $X_{\delta H}$ studied. The smallest value of $X_{\delta H}$ studied was zero, the largest value was 5 times the baseline value. Transfer functions for θ/X_C for the baseline augmented aircraft are given in Appendix III for all values of $X_{\delta H}$ investigated.

NORMAL FORCE COEFFICIENTS

The effect of coefficient variations for both augmented and unaugmented configurations on the short period requirements of Reference 1 are summarized in Figure 53. The data presented in this figure have been normalized to the minimum frequency and damping ratio requirements of this document.

The level 1 requirements were met in all cases with baseline augmentation. The effect of augmentation on variations in individual parameters is discussed in greater detail below.

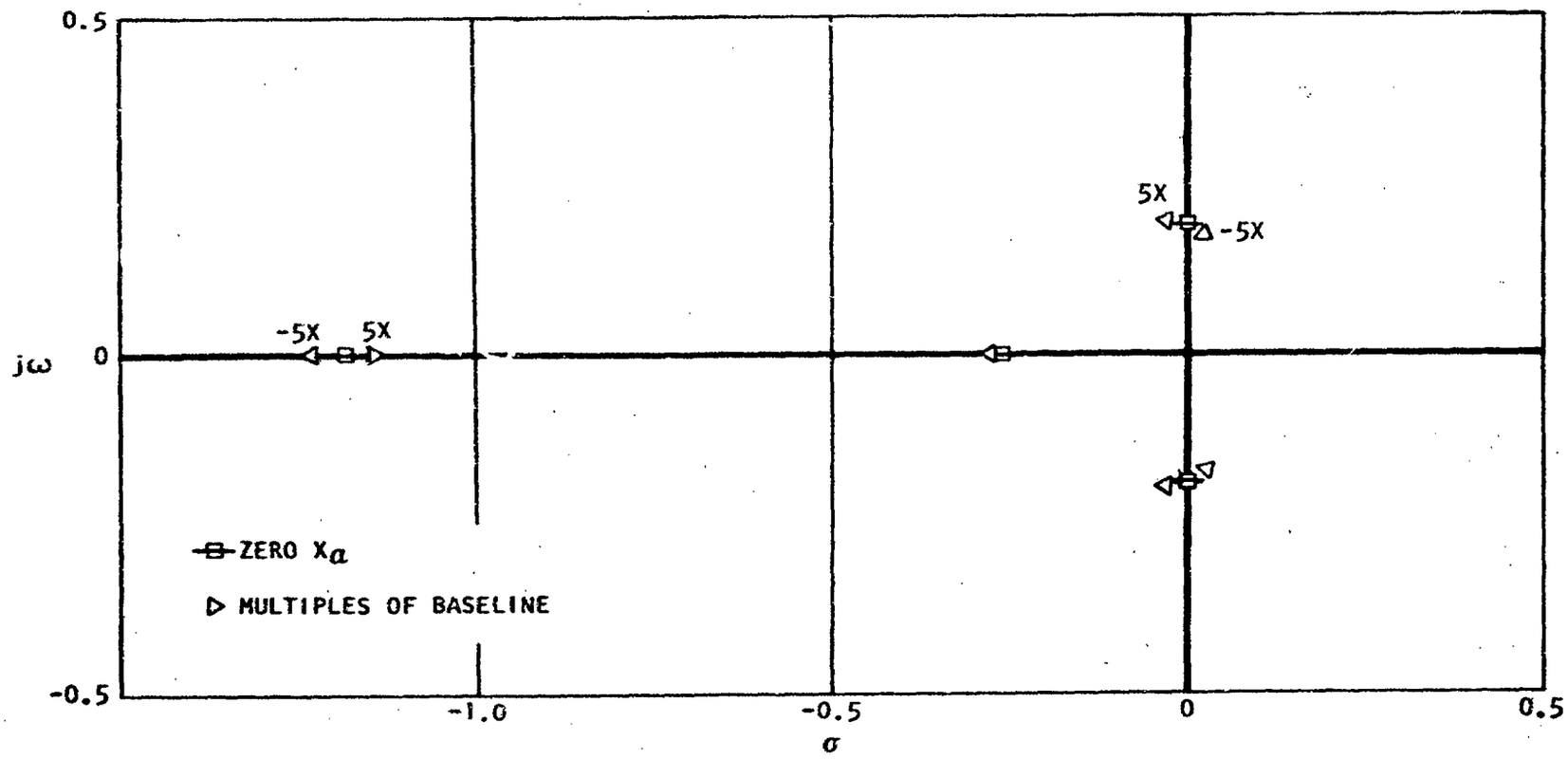

Figure 51. Effect of X_a Variation on the Longitudinal Roots in the S-plane for the Unaugmented Aircraft

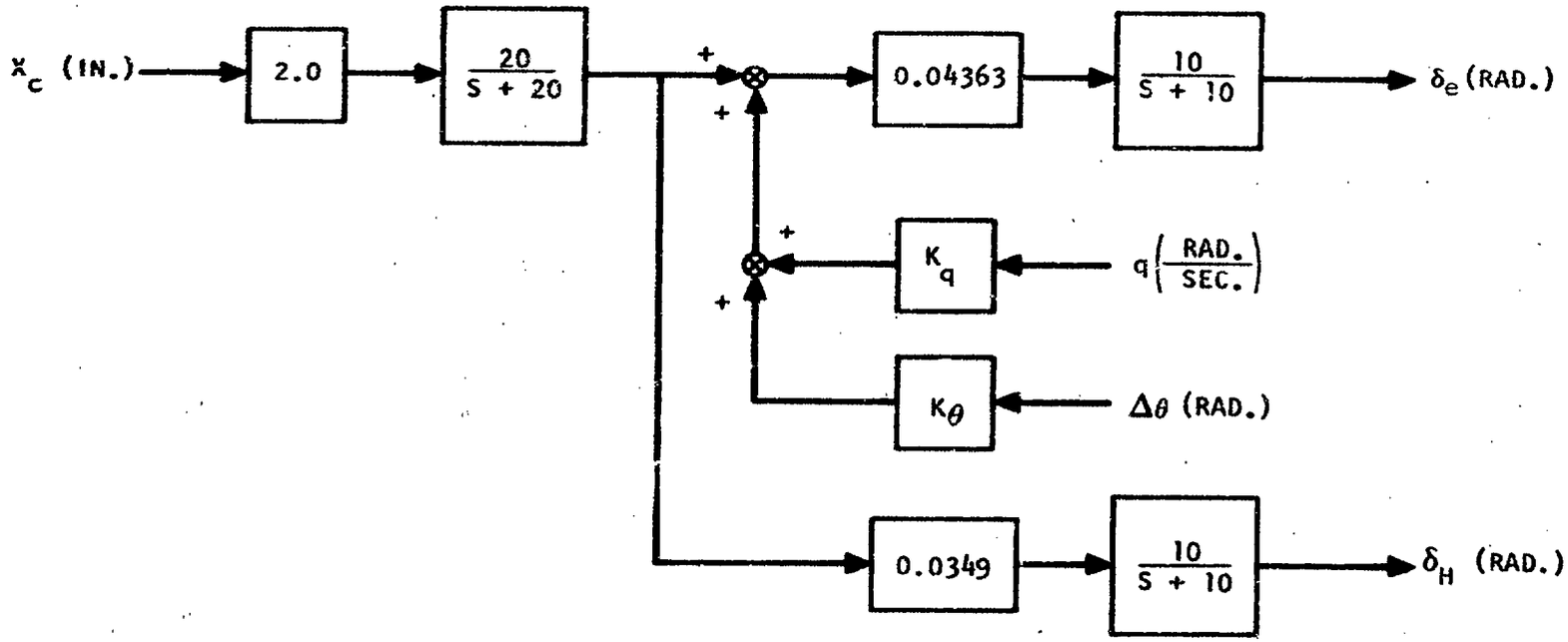

Figure 52. Longitudinal Axis Control and Augmentation System for $-5X_\alpha$ Case

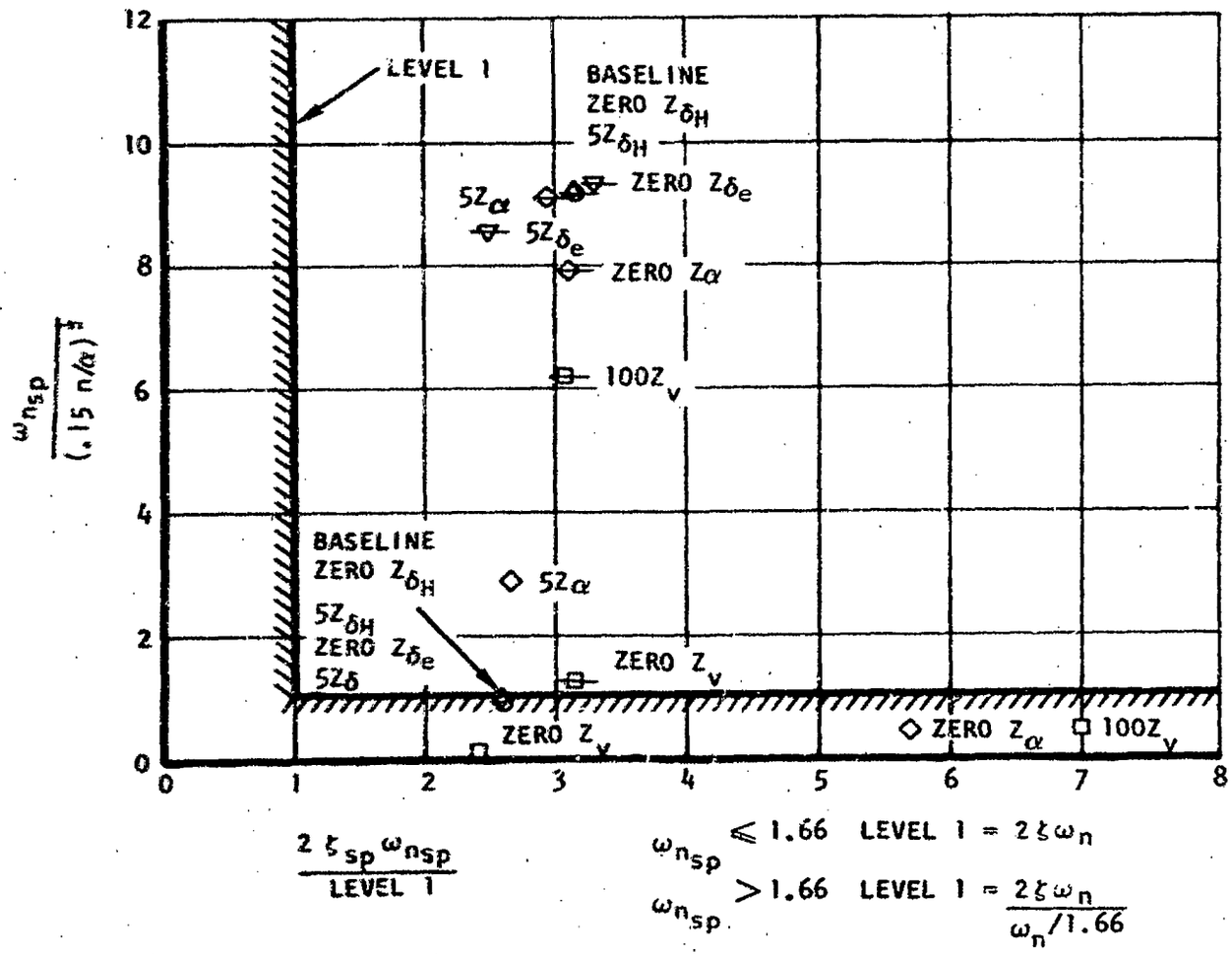

Figure 53. Short Period Dynamics for Normal Force Coefficient Variations

For the unaugmented configuration the short period data of Figure 53 also show that the 5 Z_α case met the requirements of level 1. For all other coefficient values, including those of the baseline vehicle, the minimum frequency requirement could not be met.

Figure 54 through 57 show the effect of normal force coefficient variations on $\omega_{n_{sp}}$, ζ_{sp}, and ω_{np} for the unaugmented, baseline augmented, and revised augmented aircraft. The effect of individual parameter variations on the augmented and unaugmented baseline vehicle is discussed in detail below.

Z_V : baseline value = -0.277

Variation of Z_V indicates a strong influence of the coefficient on the phugoid frequency. Increasing negative values of Z_V increases phugoid frequency with a large increase in phugoid damping. Very small values of Z_V can result in slightly unstable phugoid damping. Figure 56 shows the effect of varying Z_V on the phugoid frequency for the basic aircraft. Figure 58 shows the effect of varying Z_V on the basic aircraft longitudinal roots in the s-plane. These data show that variations in Z_V affect frequency and damping of the phugoid roots and also the damping of the short period roots.

With baseline augmentation operating, both the largest and smallest values of Z_V investigated showed satisfactory short period and phugoid mode responses. Transfer functions for θ/X_c are given in Appendix III for both the basic and baseline augmented aircraft.

Z_α : baseline value = -60.1

Variation of Z_α indicates primary influence of this coefficient is on the short period mode with a small effect on the phugoid frequency. Increasing negative values of Z_α increase the short period frequency for the basic aircraft. Figure 59 shows the effect of Z_α variation in the s-plane for the basic aircraft short period and phugoid mode roots.

With baseline augmentation operating, both the largest and smallest values of Z_α investigated had satisfactory short period and phugoid mode roots. Transfer functions for θ/X_c are given in Appendix III for the basic and baseline augmented aircraft.

$Z_{\delta H}$: baseline value = -10.3

Variation in $Z_{\delta H}$ indicates very little effect of the coefficient on longitudinal dynamics for both the basic and augmented aircraft. It does, however, affect the trim characteristics of the aircraft. With baseline

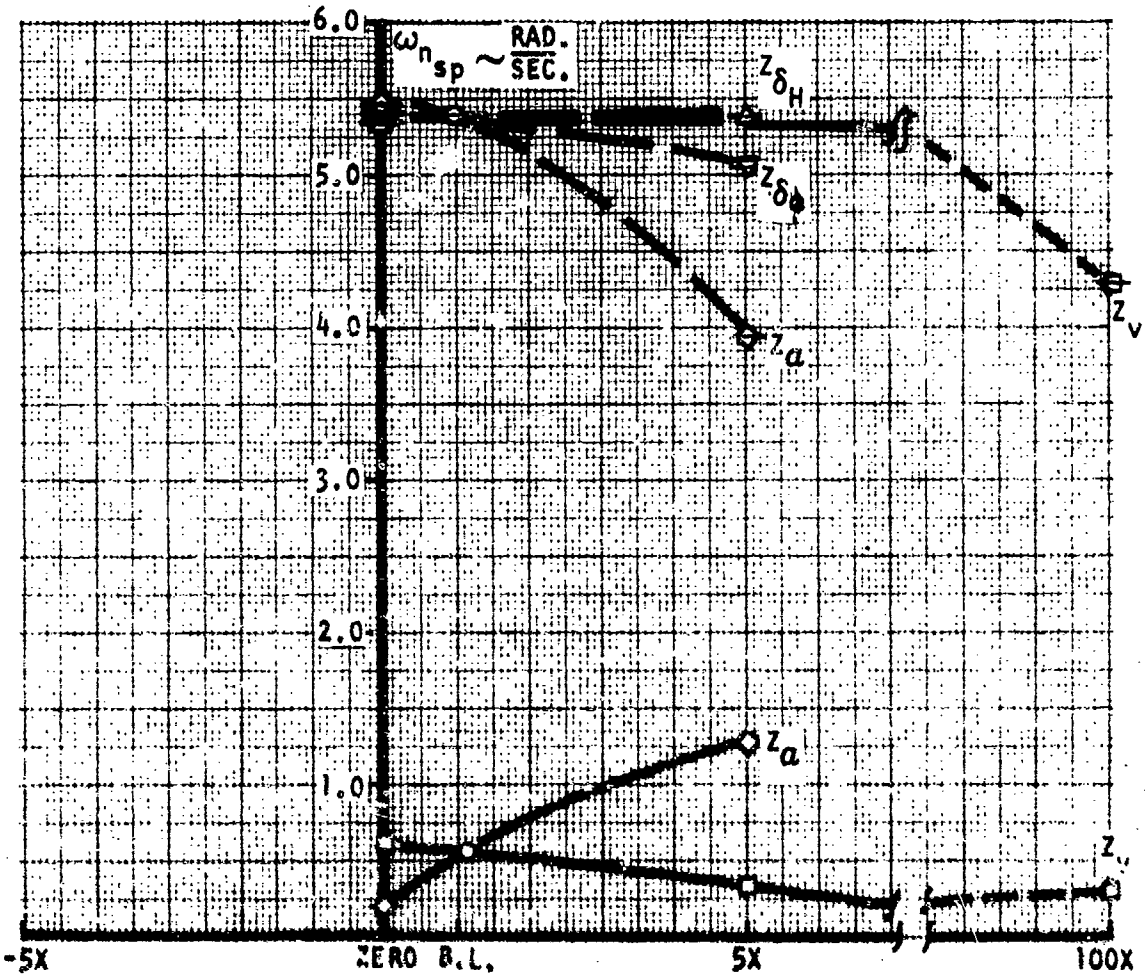

Figure 54. Effect of Normal Force Coefficient Variation on Short Period Natural Frequency

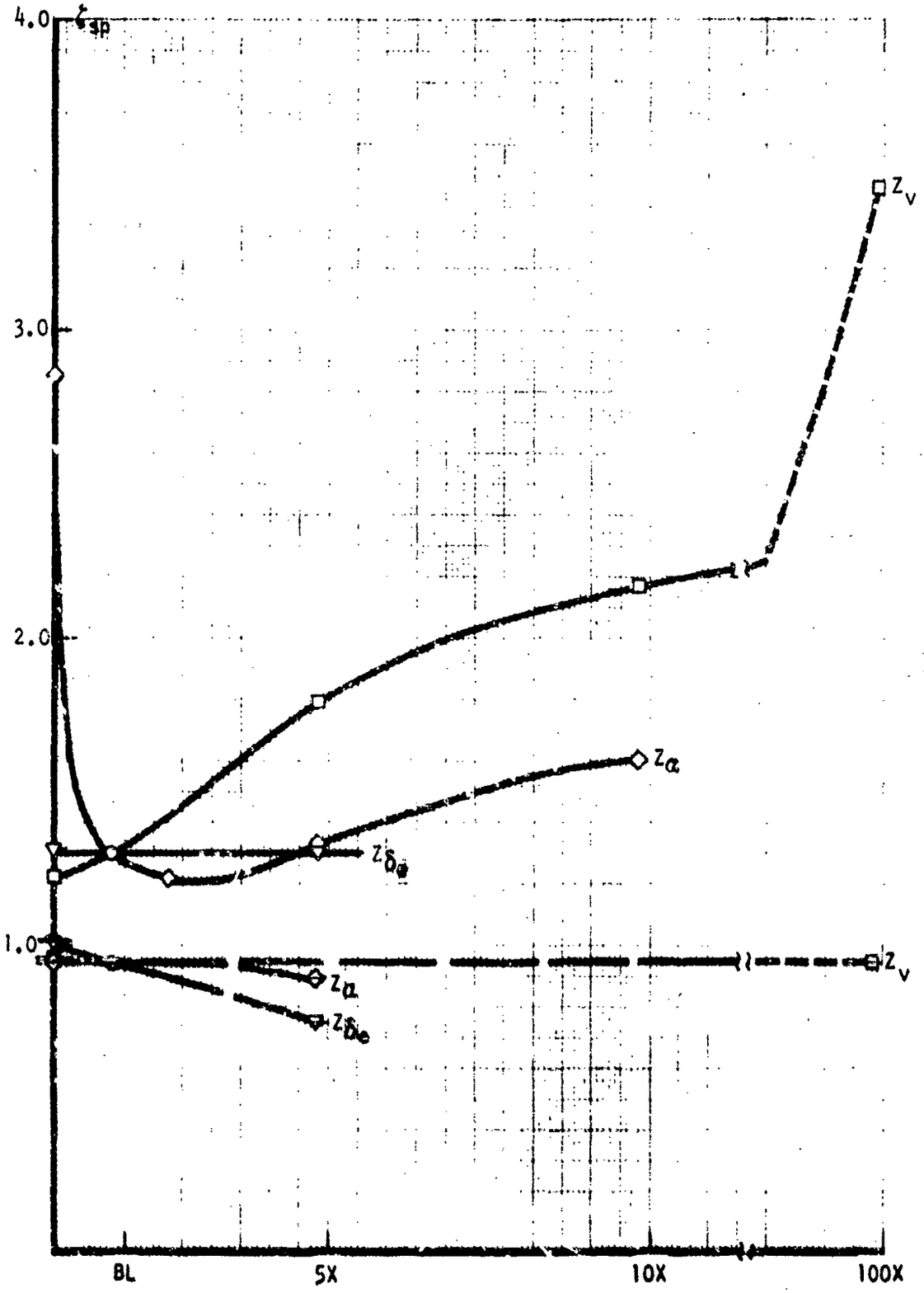

Figure 55. Effect of Normal Force Coefficient Variation on Short Period Damping Ratio

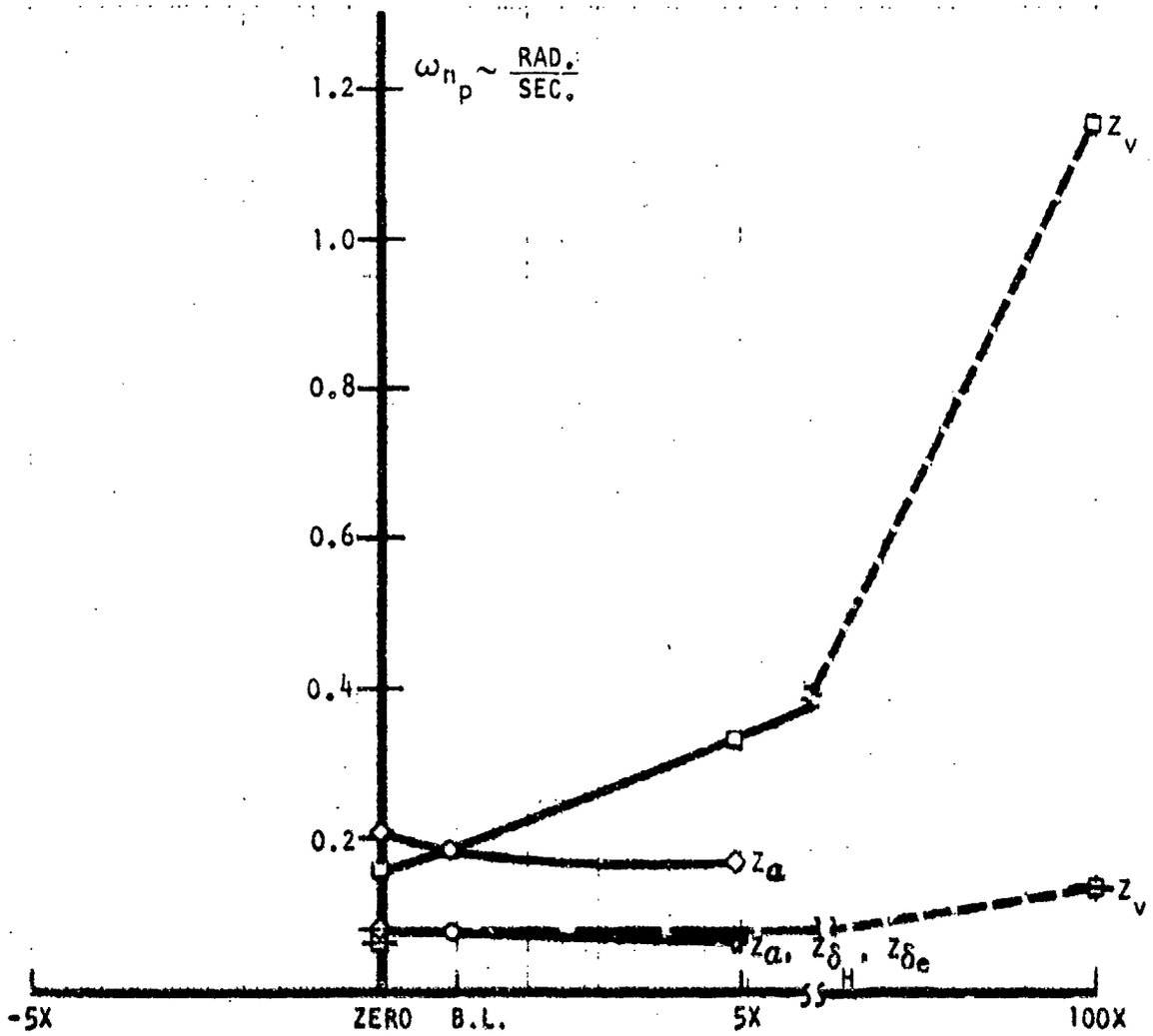

Figure 56. Effect of Normal Force Coefficient Variation on Phugoid Natural Frequency

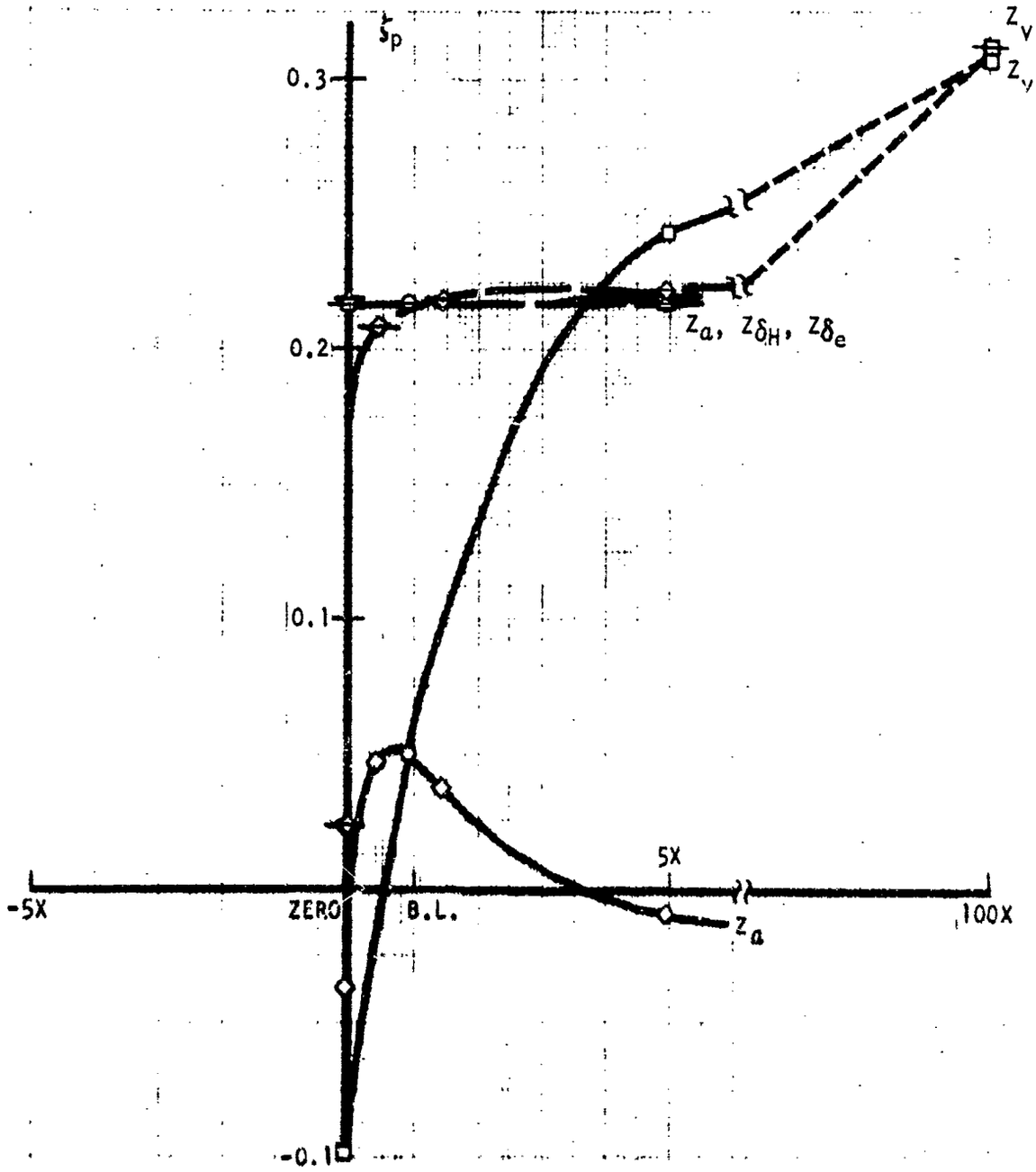

Figure 57. Effect of Normal Force Coefficient Variation on Phugoid Damping Ratio

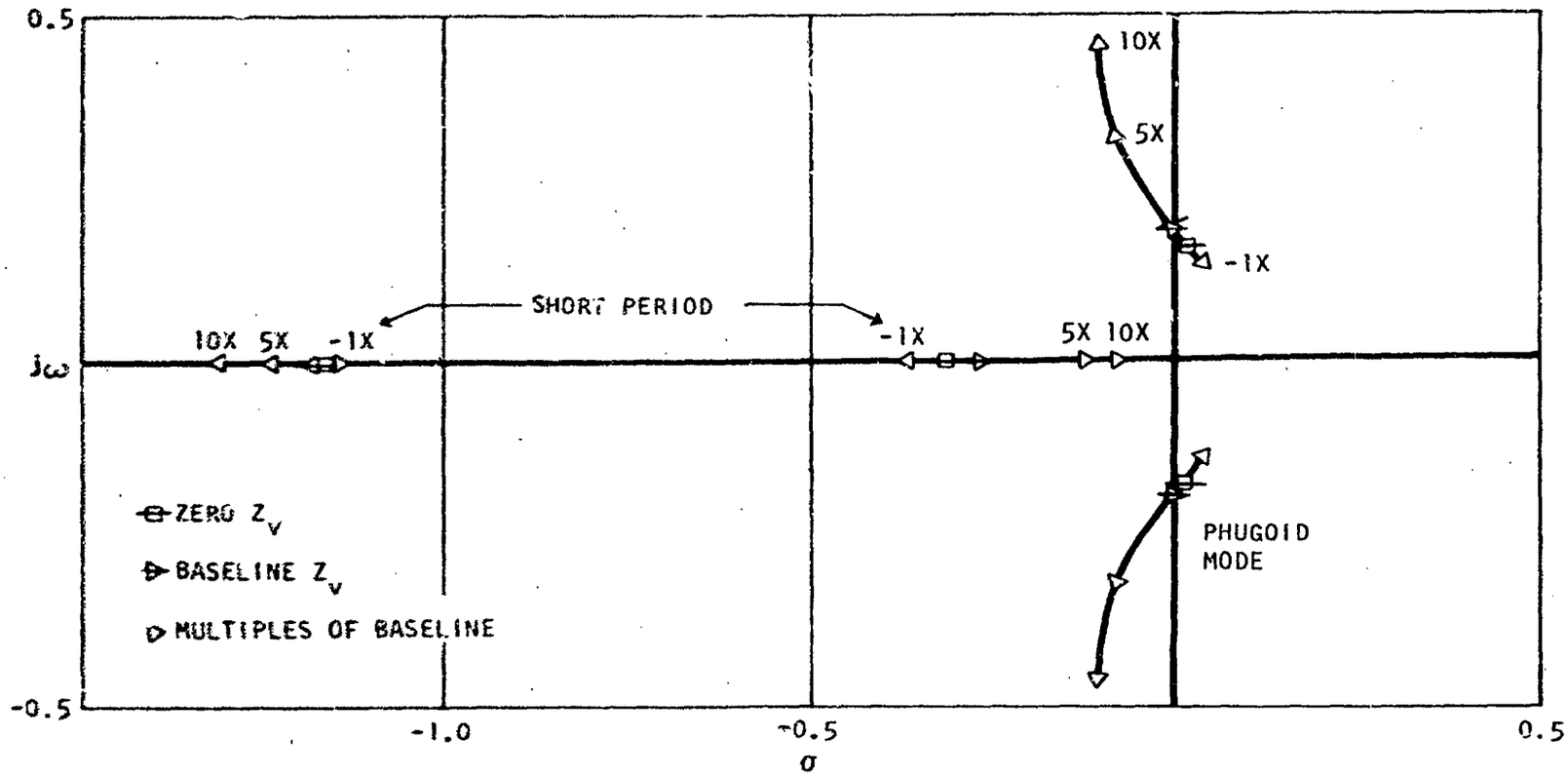

Figure 58. Effect of Z_v Variation on the Longitudinal Roots in the S-Plane for the Unaugmented Aircraft

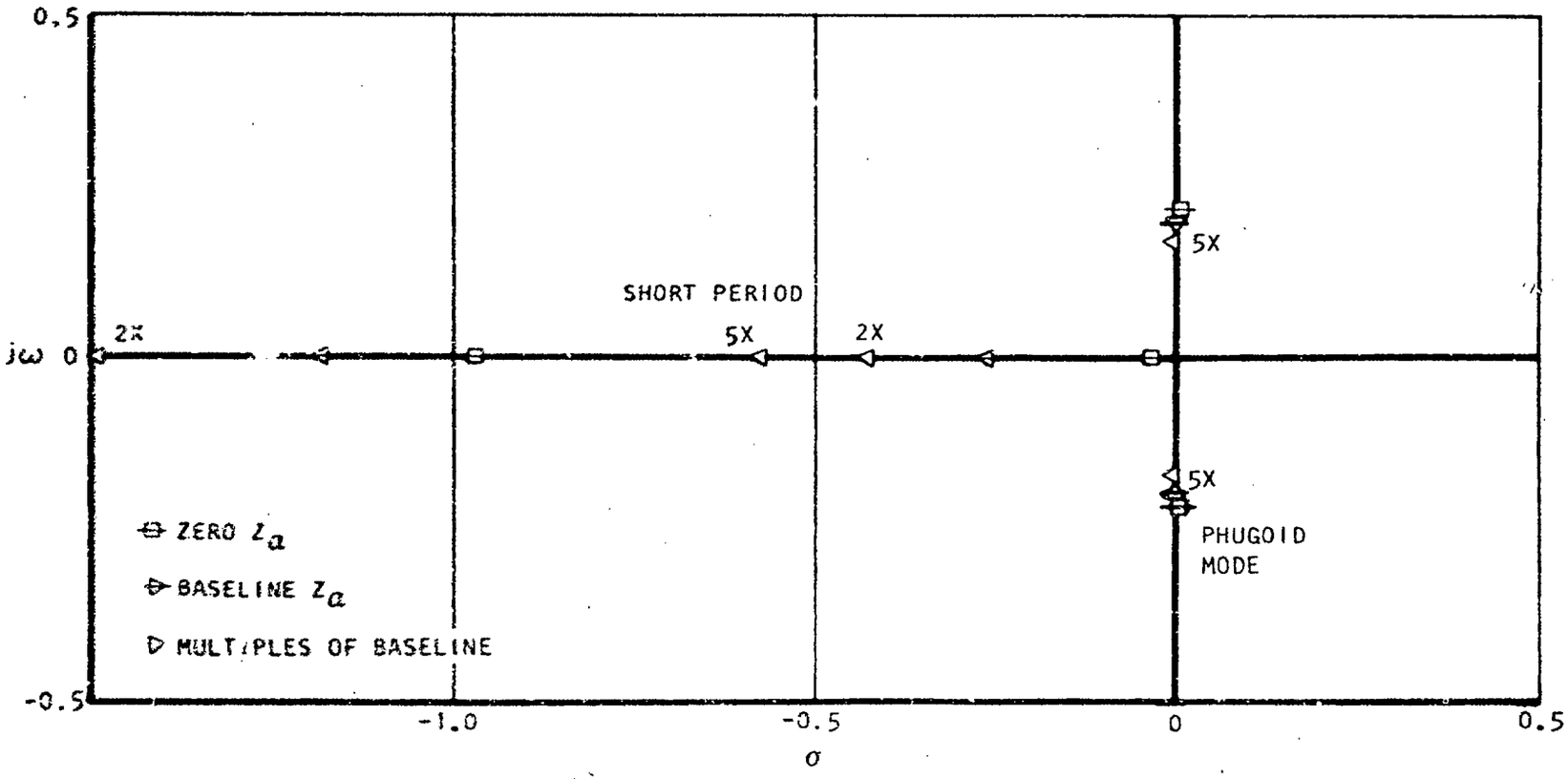

Figure 59. Effect of Z_a Variation on Longitudinal Roots in the S-plane for the Unaugmented Aircraft

augmentation operating, both the smallest value of Z_{δ_H} investigated, zero, and the largest value, 5 times the baseline value, had satisfactory short period and phugoid mode responses. Transfer functions for θ/X_c are given in Appendix III for all values of Z_{δ_H} investigated with the baseline augmented aircraft.

Z_{δ_e} : baseline value = -11.2

As would be expected, variations in Z_{δ_e} do not affect dynamic response characteristics of the basic aircraft. This results from the fact that this term does not appear in the denominator of the longitudinal transfer functions. However, with augmentation, it does appear in the denominator terms and its effect is observed on the short period response of the aircraft. Making Z_{δ_e} more negative reduces short period frequency and damping, but does not materially influence the phugoid mode roots. These results can be observed by an examination of the data in Table VII. With baseline augmentation operating, both the smallest value of Z_{δ_e} investigated, zero, and the largest, 5 times the baseline value, had acceptable longitudinal dynamic responses. Transfer functions of θ/X_c for the baseline aircraft are identified in Appendix III for all values of Z_{δ_e} investigated.

PITCHING MOMENT COEFFICIENTS

A summary of the effect of coefficient variation on the short period frequency and damping requirements of Reference 1 is presented in Figure 60. As in the case of the axial and normal force coefficients these data are plotted in a normalized manner and take into account the variations in level 1 requirements occurring with variations in $\omega_{n_{sp}}$ and $\left(\frac{n_z}{\alpha}\right)_{ss}$ for a given coefficient value.

With either baseline augmentation and/or revised augmentation configurations, all of the level requirements were met. The data of this figure show the results of the final augmentation configurations utilized.

Level 1 short period requirements were met with the unaugmented configuration for 10 M_v, 10 M_q, and 220 M_α cases. In some cases the response for these coefficient values did not meet level 1 requirements for other areas, these are discussed in detail below. For all other coefficient values including those of the baseline configuration either the minimum short period frequency and/or damping ratio could not be met.

Figures 61 through 64 show the effect of pitching moment coefficient Variation on $\omega_{n_{sp}}$, ζ_{sp}, ω_{n_p}, and ζ_p for the unaugmented, baseline augmented and revised augmented aircraft.

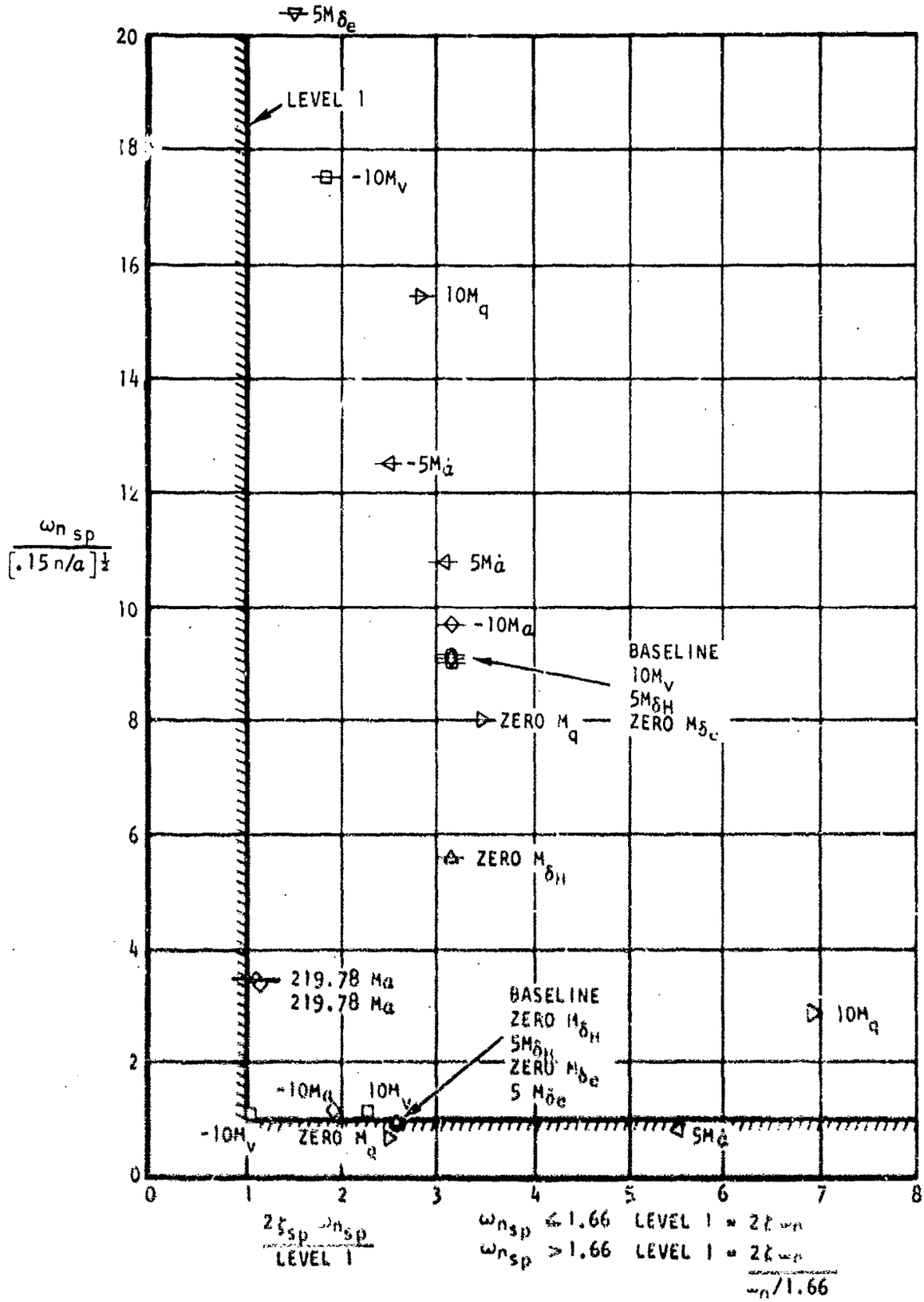

Figure 60. Short Period Dynamics for Pitching Moment Coefficients

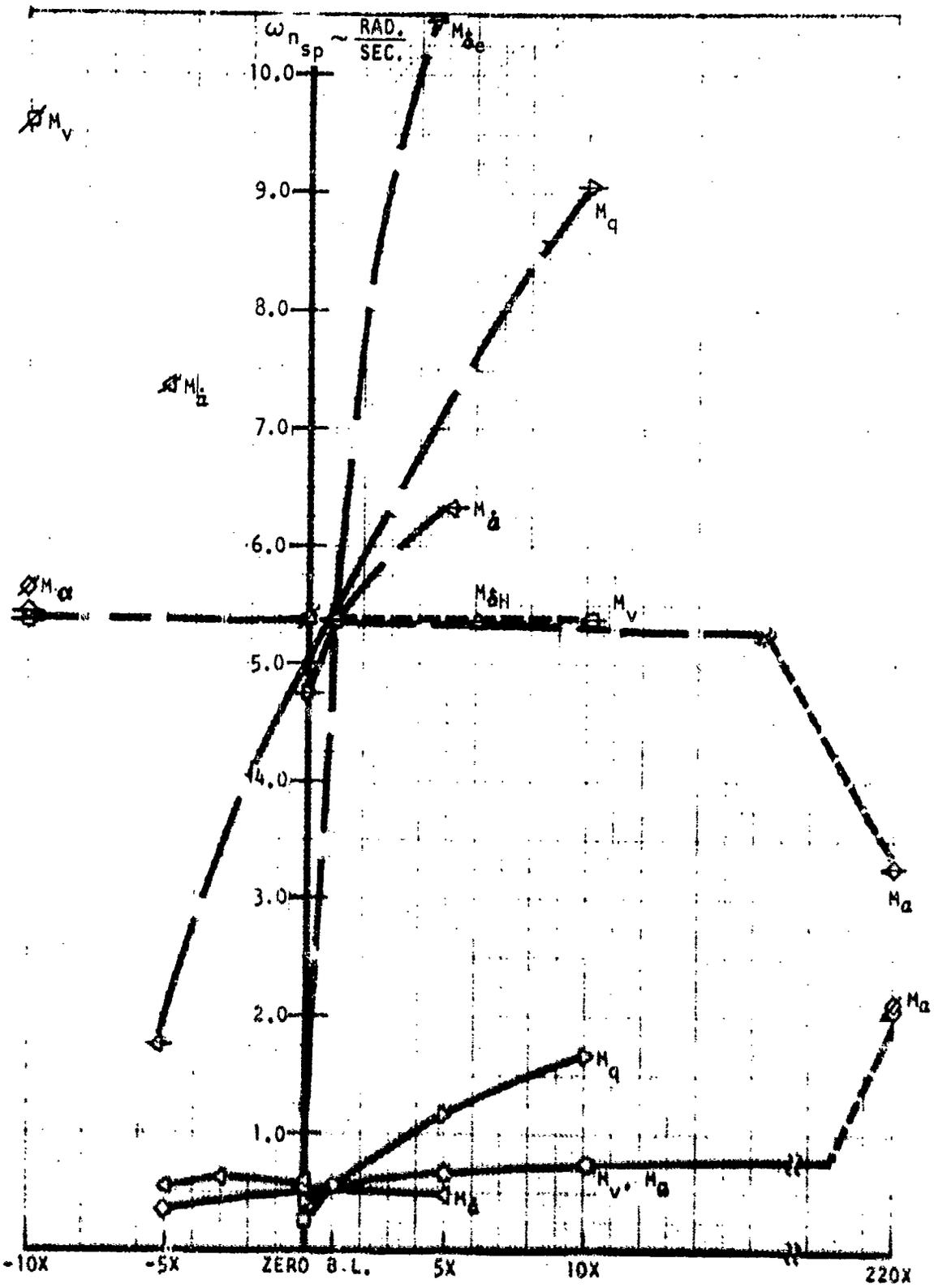

Figure 61. Effect of Pitching Moment Coefficient Variation on Short Period Natural Frequency

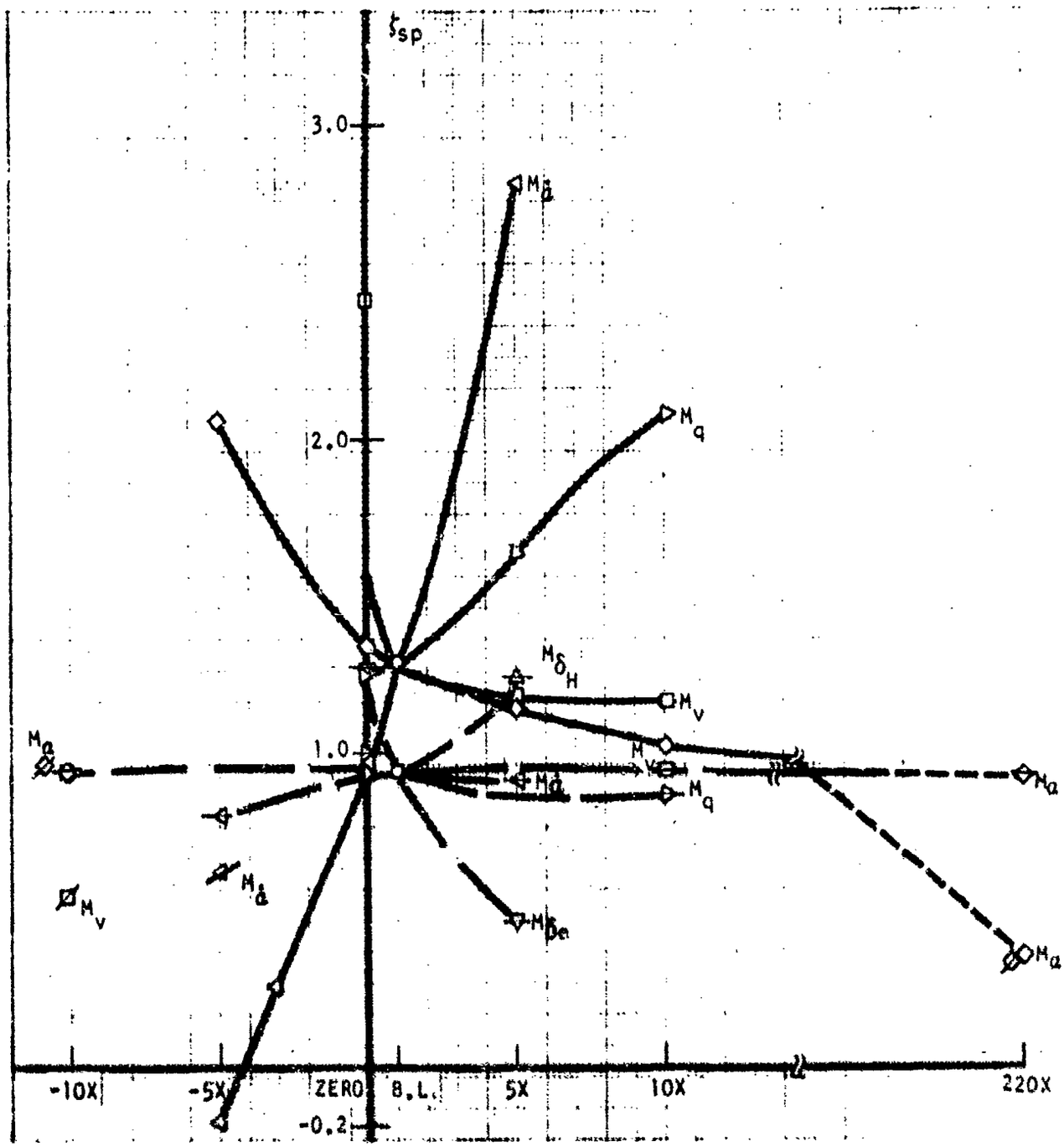

Figure 62. Effect of Pitching Moment Coefficient Variation on Short Period Damping Ratio

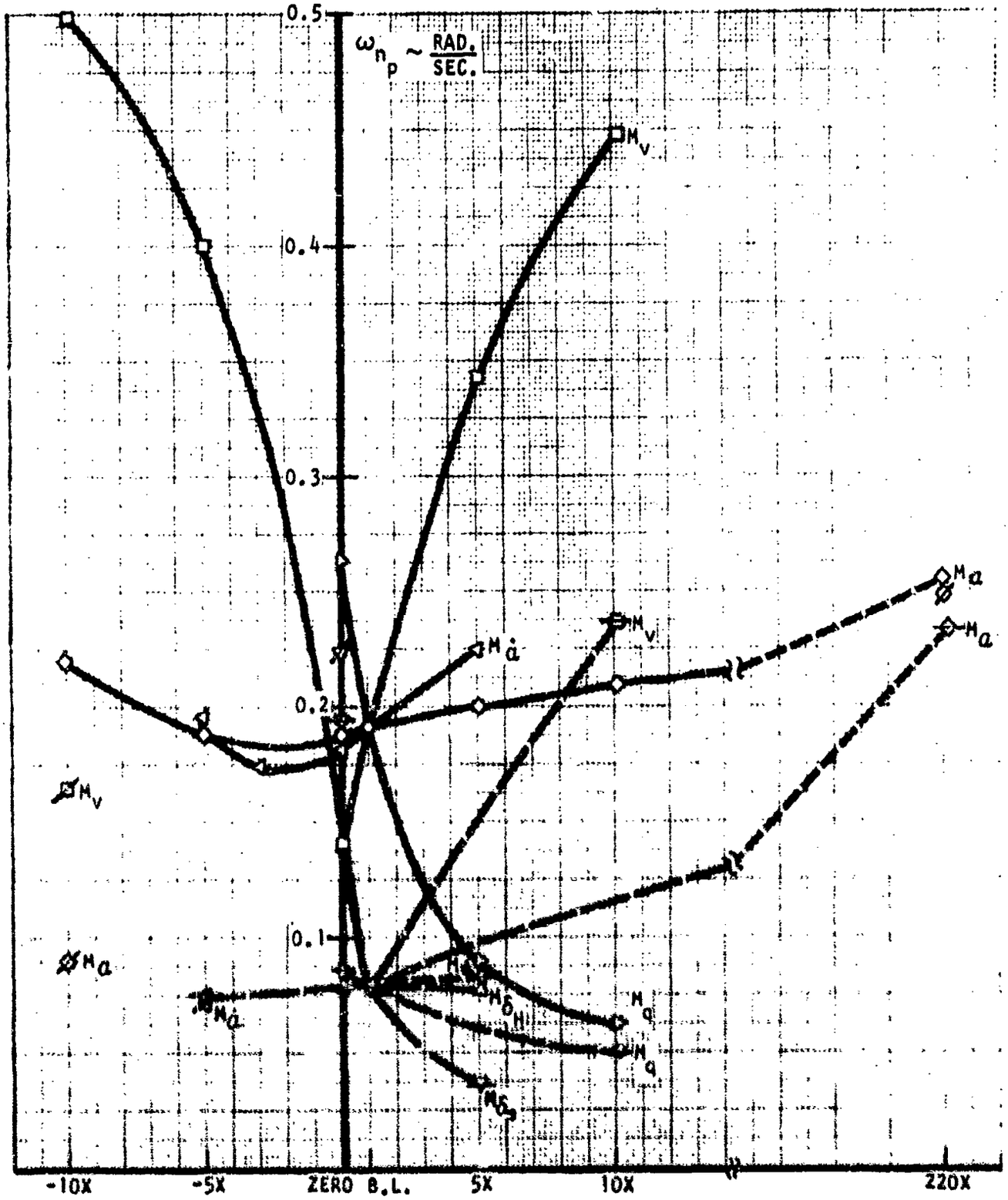

Figure 63. Effect of Pitching Moment Coefficient Variation on Phugoid Natural Frequency

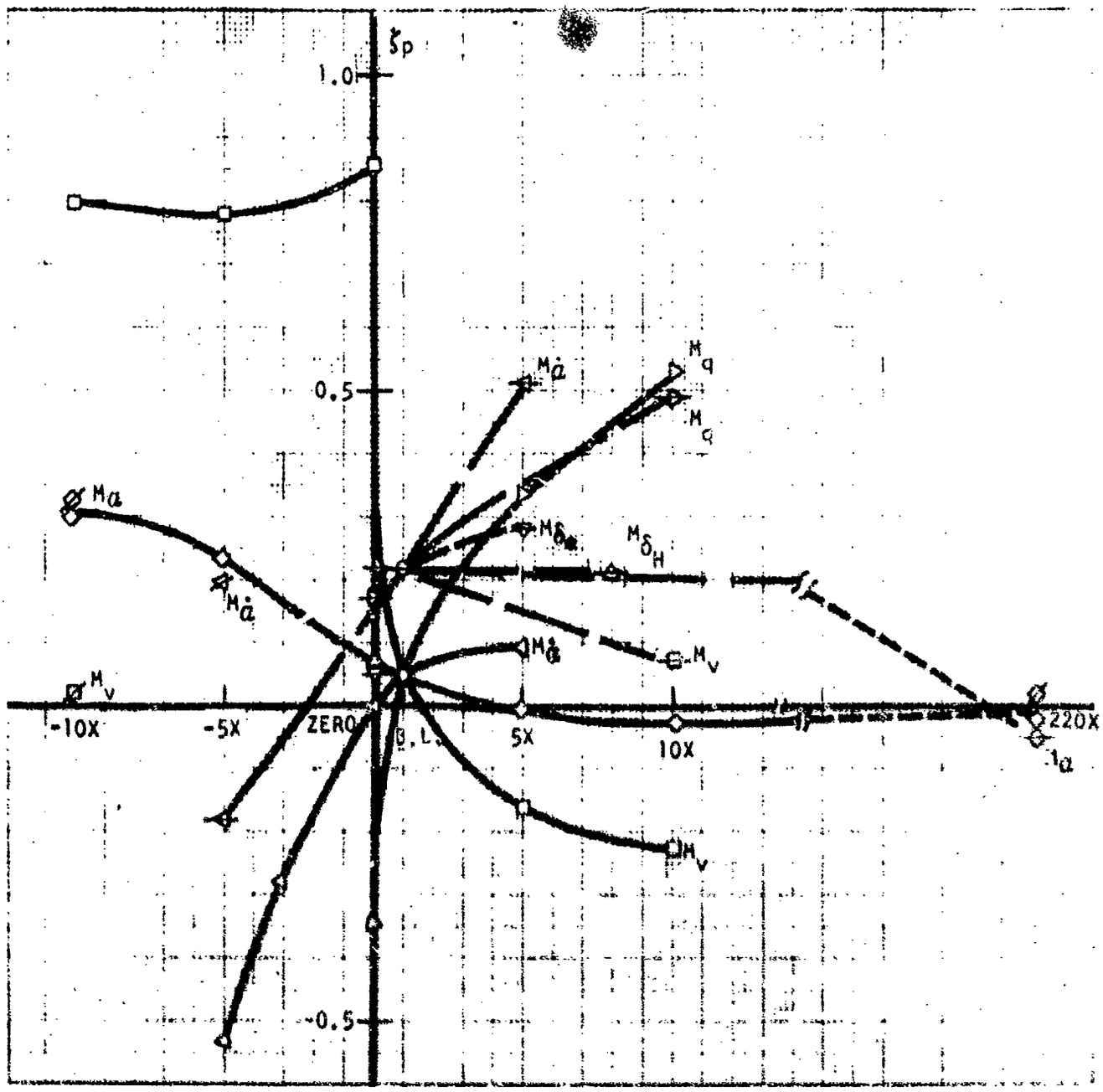

Figure 64. Effect of Pitching Moment Coefficient Variation on Phugoid Damping Ratio

M_V : baseline value = 0.00065

Significant variations in the basic aircraft longitudinal dynamics were observed with variations in this coefficient. Increasing values of M_V increase both short period and phugoid mode natural frequencies, and drive the phugoid damping unstable for the basic aircraft. Decreasing positive values of M_V indicate a strong effect of the coefficient on the phugoid damping with reductions in both short period and phugoid mode natural frequencies. Increasing negative values of M_V variation on the phugoid mode natural frequency and damping are shown in Figures 63 and 64 for the basic and augmented aircraft. The effect of M_V variation on the short period and phugoid modes in the s-plane are summarized in Figure 65.

With baseline augmentation operating, the largest positive value of M_V investigated, 10 times the baseline value, demonstrated satisfactory longitudinal response characteristics. The largest negative value of M_V investigated, -10 times the baseline value, had an unstable real phugoid mode root. By means of root locus techniques, an angle of attack feedback and an increased pitch rate feedback gain were added to the pitch augmentation system in order to provide satisfactory longitudinal responses. Figure 66 shows the mechanization of the revised pitch augmentation system for this case. Transfer functions for θ/X_C are given in Appendix III for the basic, baseline augmented, and revised augmented aircraft.

M_α : baseline value = -0.0182

Variation in M_α, the static stability coefficient, indicates primary influence of the parameter on the short period mode and a significant influence on the stability of the phugoid mode for the basic aircraft. Increasing negative values of M_α cause the two real short period mode roots of the baseline case to merge and become a complex pair. Increasing negative values of M_α may also cause the phugoid mode to go unstable. This occurred for values of negative M_α greater than 5.3 times the baseline value. Increasing positive values of M_α cause the two real short period mode roots to separate and eventually drives one of them unstable.

With baseline augmentation operating, both the largest positive value of M_α investigated, -10 times the baseline value, and the largest negative value of M_α, the M_α = -4.0 case, had unstable phugoid modes. For the large positive value of M_α an angle of attack feedback was added to the pitch augmentation system as shown in Figure 66. This mechanization effectively permitted changing the sign of the unstable M_α term to one which was statically stable with augmentation on. For the large negative value of M_α an attitude-hold loop utilizing incremental changes in pitch

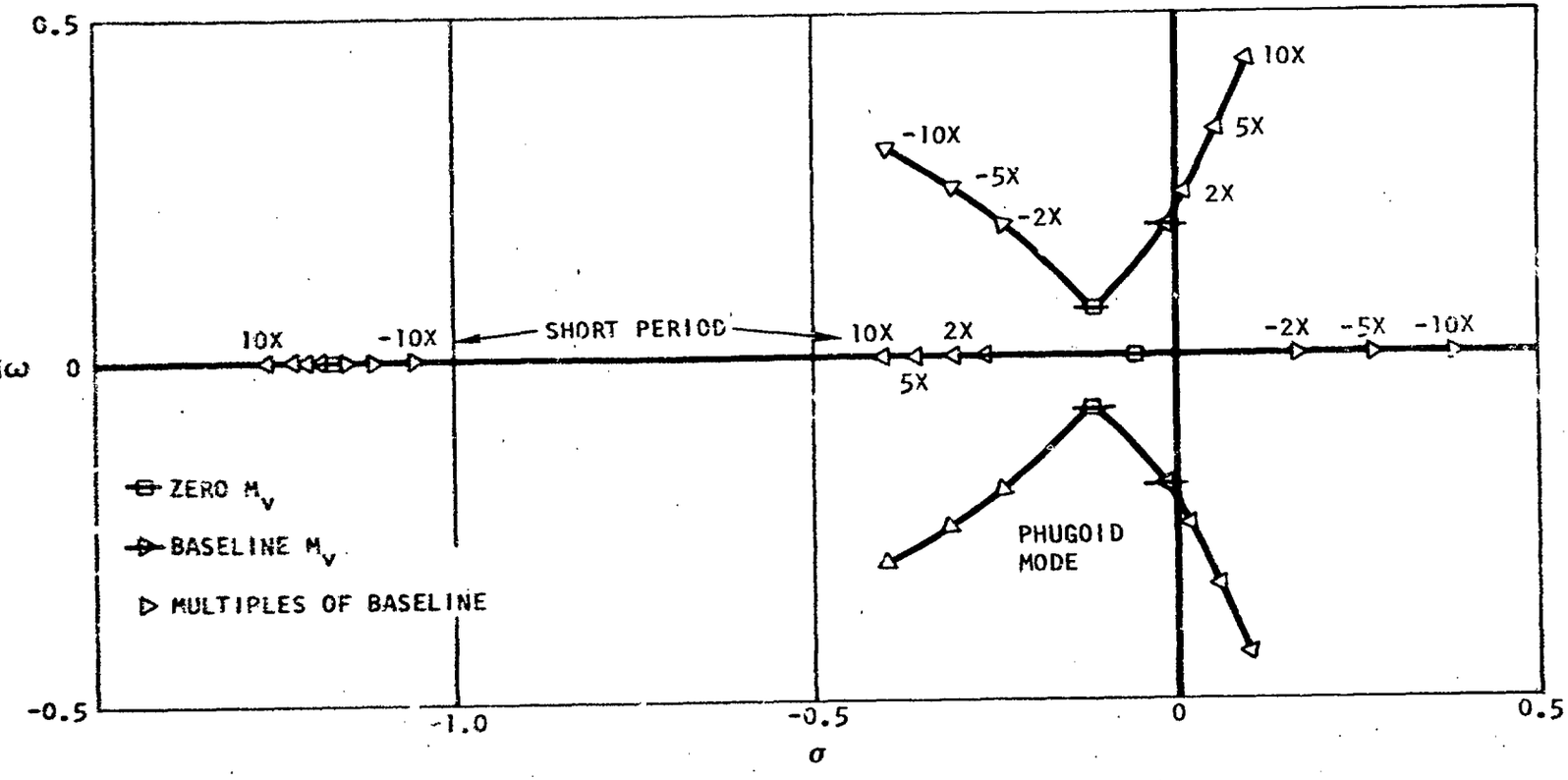

Figure 65. Effect of M_v Variation on the Longitudinal Roots in the S-plane for the Unaugmented Aircraft

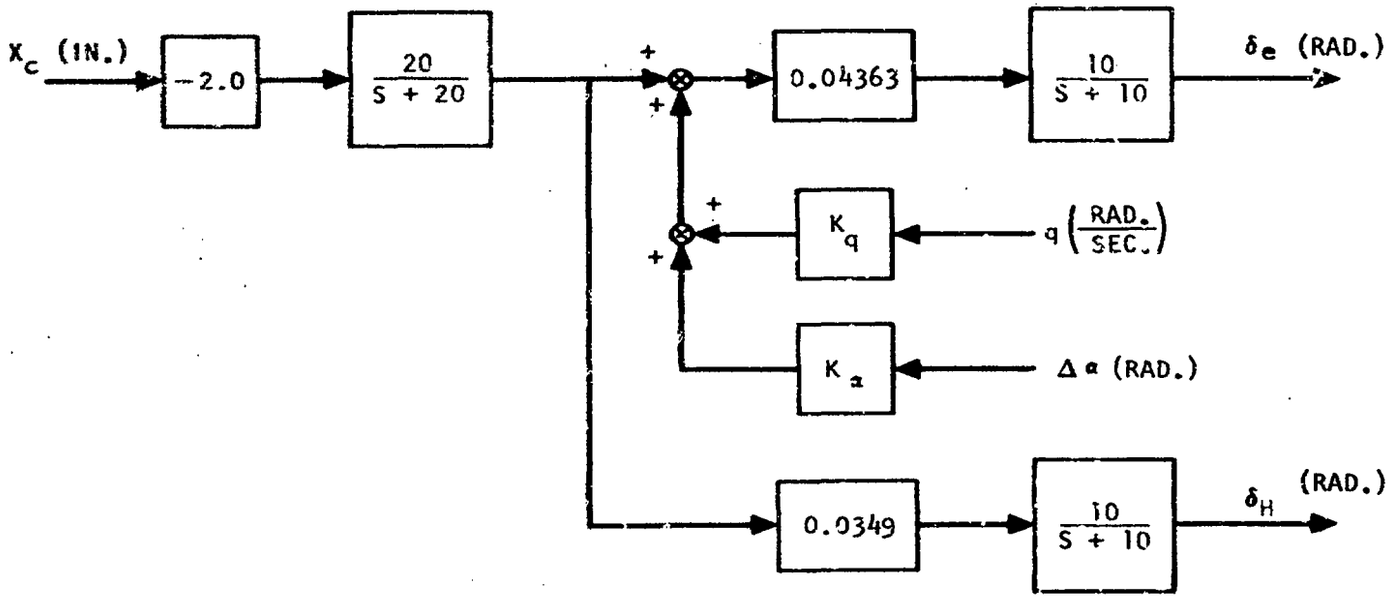

Figure 66. Longitudinal Axis Control and Augmentation System for -10 M_V and -10 M_α Cases

attitude was added to pitch augmentation as shown in Figure 68. Both the largest positive and negative values of M_α investigated had satisfactory short period and phugoid mode responses with revised augmentation.

The effect of M_α variation on the longitudinal responses are shown for the basic aircraft in Figure 67 for the s-plane. Transfer functions for θ/X_c for the basic, baseline augmented, and revised augmented aircraft are given in Appendix III for all the variations of M_α investigated.

$M_{\dot{\alpha}}$: baseline value = -0.312

Variation in $M_{\dot{\alpha}}$ indicates primary influence of the coefficient on the short period mode with a significant effect on the stability of the phugoid mode. Increasing positive values of $M_{\dot{\alpha}}$ tend to merge the two real short period roots making them complex. Large positive values may drive both the short period and phugoid mode damping unstable.

With baseline augmentation operating, the largest negative value of $M_{\dot{\alpha}}$ investigated, 5 times the baseline value, had satisfactory short period and phugoid mode responses. The largest positive value of $M_{\dot{\alpha}}$ investigated required a larger pitch rate feedback gain in the pitch augmentation system and the elimination of the normal acceleration feedback of the baseline system. With the revised pitch augmentation system shown in Figure 69 satisfactory short period and phugoid mode responses were attained.

Figure 70 shows the effect of $M_{\dot{\alpha}}$ variation for the basic aircraft in the s-plane. Transfer functions for θ/X_c for the basic, baseline augmented, and revised augmented aircraft are given in Appendix III for all values of $M_{\dot{\alpha}}$ investigated.

M_q : baseline value = -0.63

Both the short period and phugoid mode responses of the basic aircraft were affected by variations in this coefficient. Increasing negative values of the pitch damping term tend to increase the short period frequency, decrease the phugoid frequency, and increase the phugoid damping.

With baseline augmentation operating, both the smallest value of M_q investigated, zero, and the largest value of M_q, 10 times the baseline value, satisfied short period and phugoid mode requirements. Figures 63 through 64 show the effect of M_q variation on the phugoid natural frequency and damping for both the basic and augmented aircraft. Figure 71 shows the effect of M_q variation on both the short period and phugoid modes for the basic aircraft in the s-plane. Transfer functions for θ/X_c

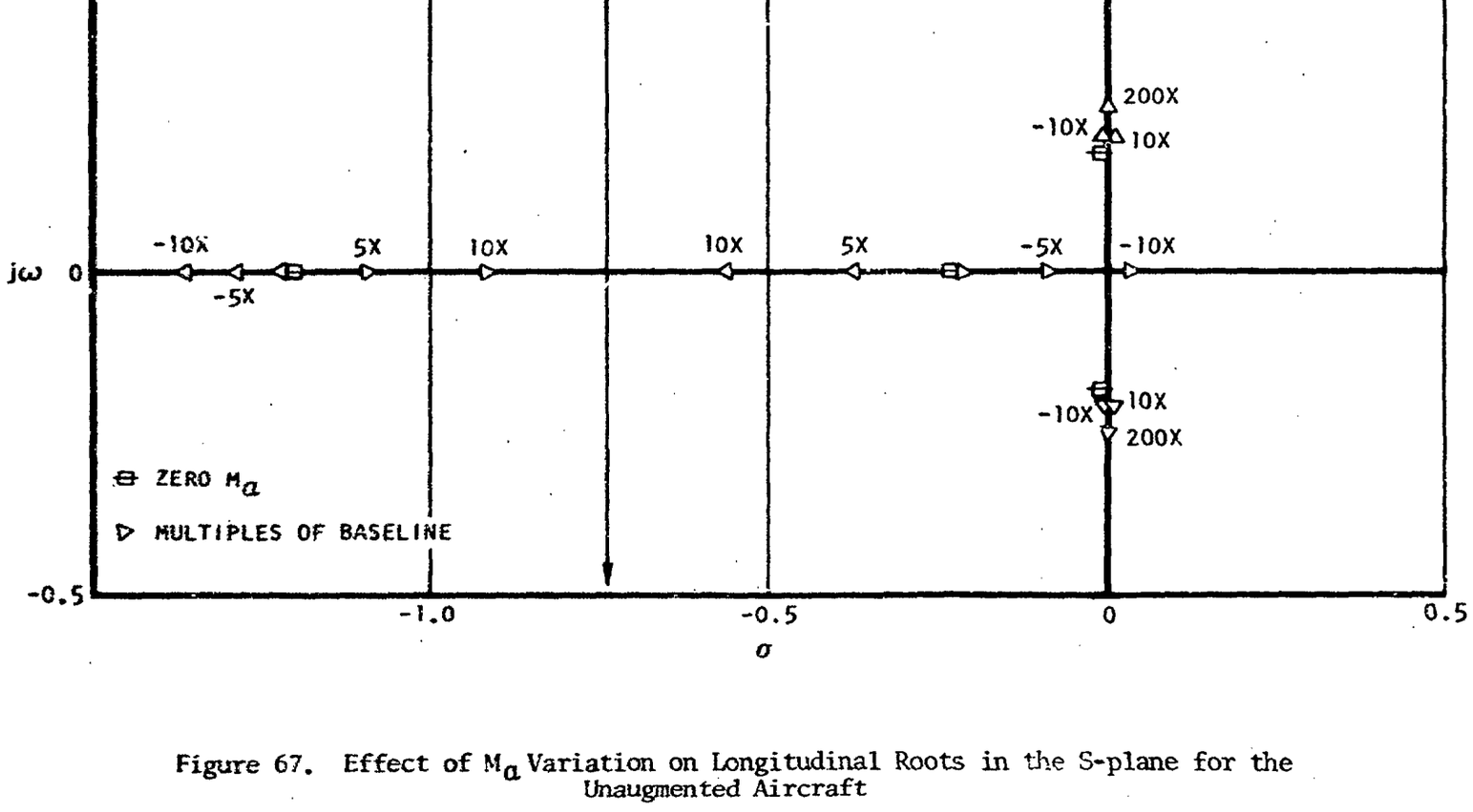

Figure 67. Effect of M_α Variation on Longitudinal Roots in the S-plane for the Unaugmented Aircraft

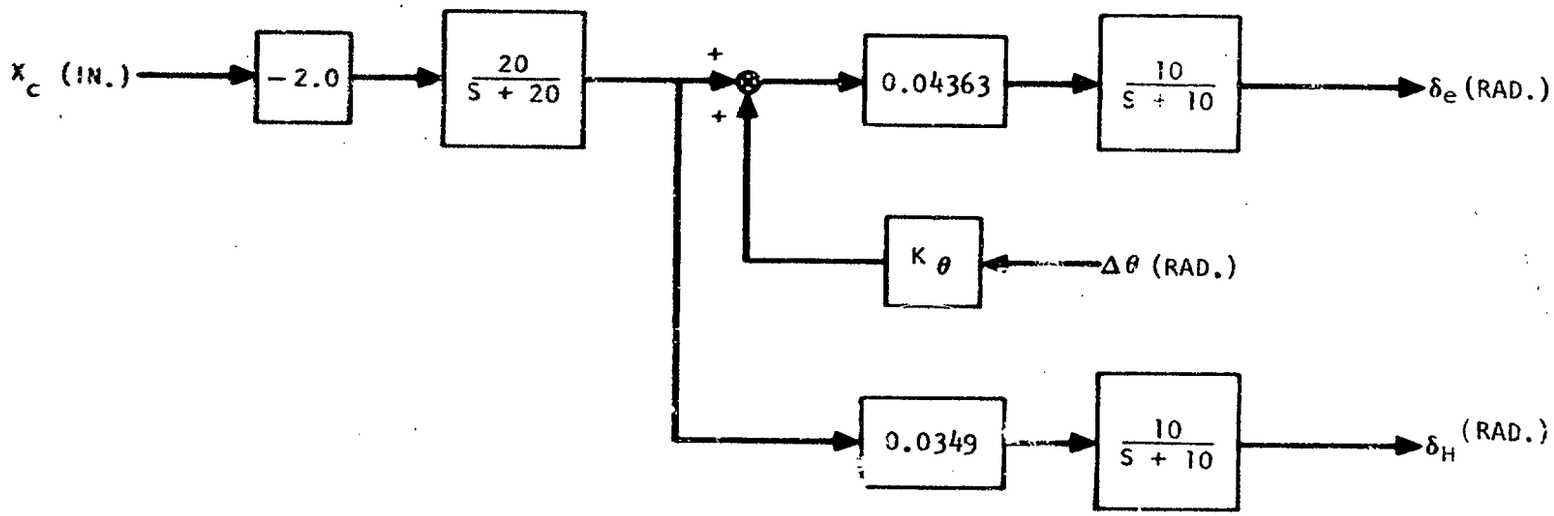

Figure 68. Longitudinal Axis Control and Augmentation System for $M_\alpha = -4.0$ Case

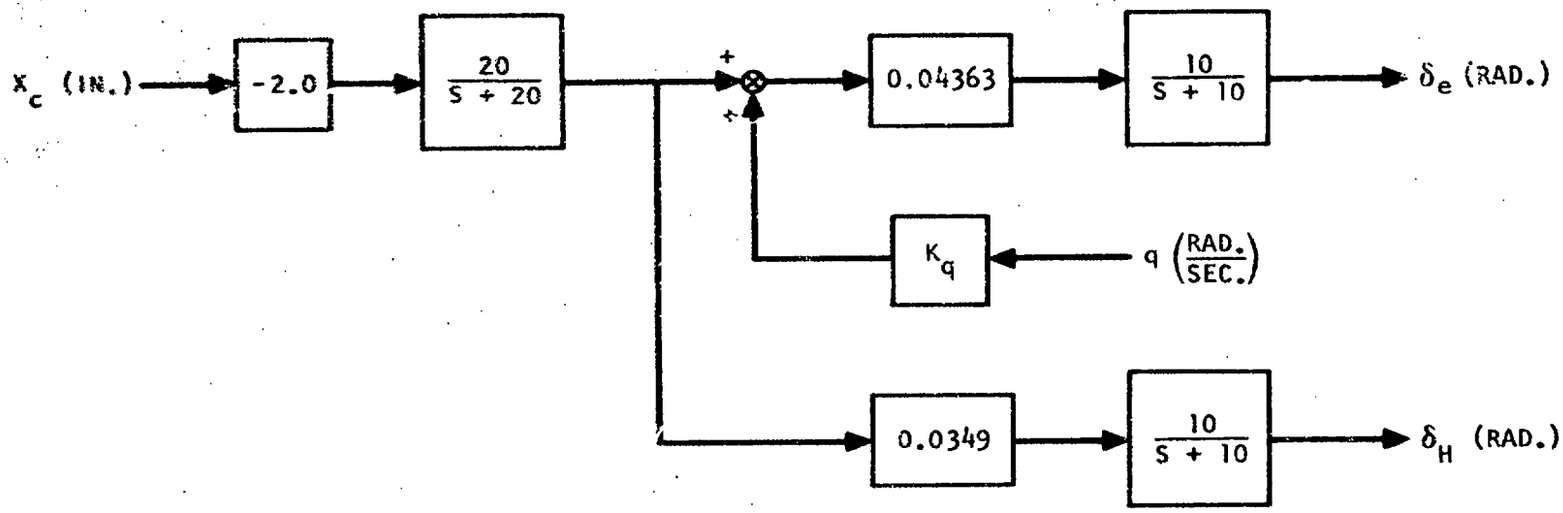

Figure 69. Longitudinal Axis Control and Augmentation System for $-5M_{\dot{\alpha}}$ Case

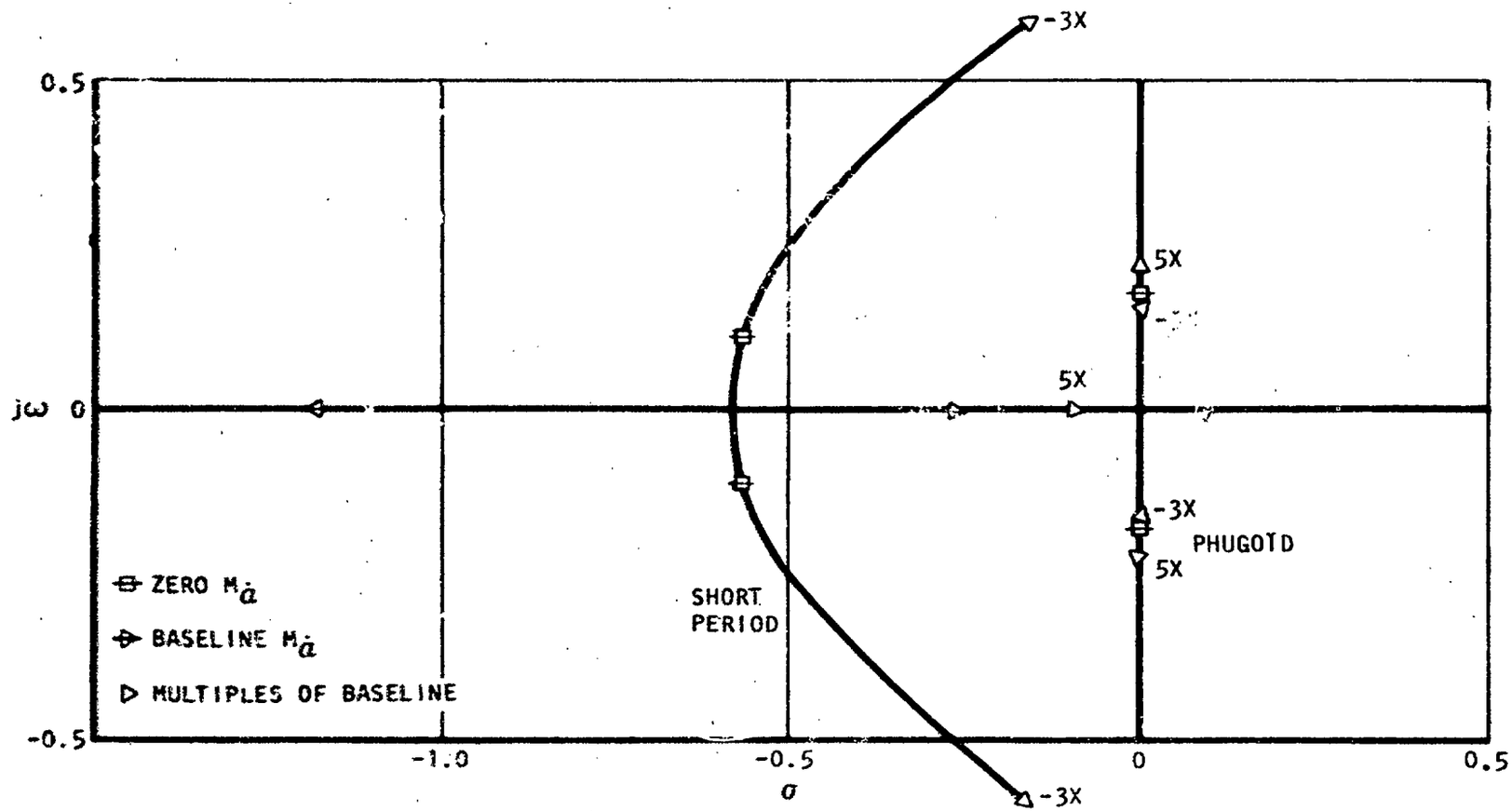

Figure 70. Effect of $M_{\dot{\alpha}}$ Variation on the Longitudinal Roots in the S-plane for the Unaugmented Aircraft

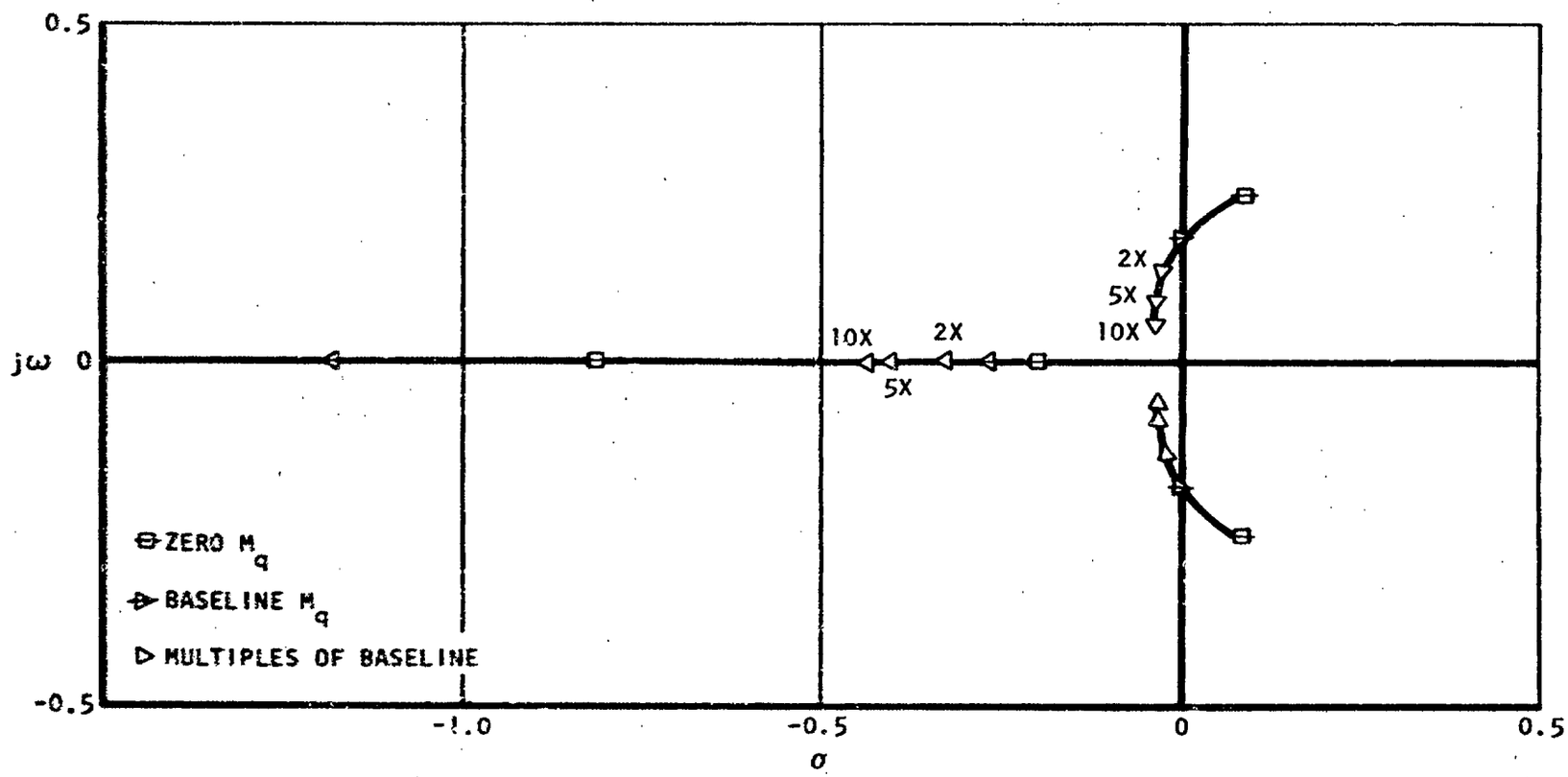

Figure 71. Effect of M_q Variation on Longitudinal Roots in the S-plane for the Unaugmented Aircraft

are given in Appendix II for both the basic and baseline augmented aircraft for all variations of M_q studied.

M_{δ_e} : baseline value = -1.32

Variation of M_{δ_e} for the basic aircraft indicates a strong influence of this coefficient on the steady-state pitch attitude angle, θ, following a column step input. M_{δ_e} variation does not affect either the short period or phugoid modes for the basic aircraft.

With baseline augmentation operating, the magnitude of M_{δ_e} has a large influence on the effectiveness of the pitch augmentation. The zero M_{δ_e} case naturally nullified the effect of the pitch augmentation. Figure 61 through 64 indicate that the minimum M_{δ_e} which will satisfy dynamic response requirements at this trim condition is 0.2 times the baseline value. In order to provide satisfactory level 1 short period frequency for the zero M_{δ_e} it was necessary to augment the horizontal stabilizer. Baseline augmentation was sufficient to provide satisfactory longitudinal responses for the largest value of M_{δ_e} investigated, 5 times the baseline value. Equivalent augmentation through the horizontal stabilizer was sufficient to provide satisfactory results for the zero M_{δ_e} case. Transfer functions for θ/χ_c are given in Appendix III for the baseline augmented and revised augmented aircraft for all values of M_{δ_e} studied. Figure 72 shows the revised pitch augmentation system used for the zero M_{δ_e} case.

M_{δ_H} : baseline value = -1.21

Variation in M_{δ_H} indicates a strong influence of this coefficient on steady-state values for the pitch attitude change in 1 second and horizontal stabilizer trim. Variation of M_{δ_H} does not affect the basic aircraft short period or phugoid modes.

With baseline augmentation operating both the smallest value of M_{δ_H} studied, zero, and the largest value of M_{δ_H} studied, 5 times the baseline value, had satisfactory short period and phugoid mode responses. Since baseline augmentation is coupled only to the elevator no variation in baseline augmented dynamics would be expected for the zero M_{δ_H} case, however, the baseline vehicle trim system is coupled to the horizontal stabilizer and, as a result, the zero M_{δ_H} case requires redefinition of the trim control system. Trim studies for this c.g. position have indicated that stabilizer trim positions vary from zero to seven degrees. These data would indicate that the minimum M_{δ_H} necessary to satisfy the trim requirements is approximately 0.33 times the baseline value at the aft c.g. position investigated. Forward c.g. positions would require considerably

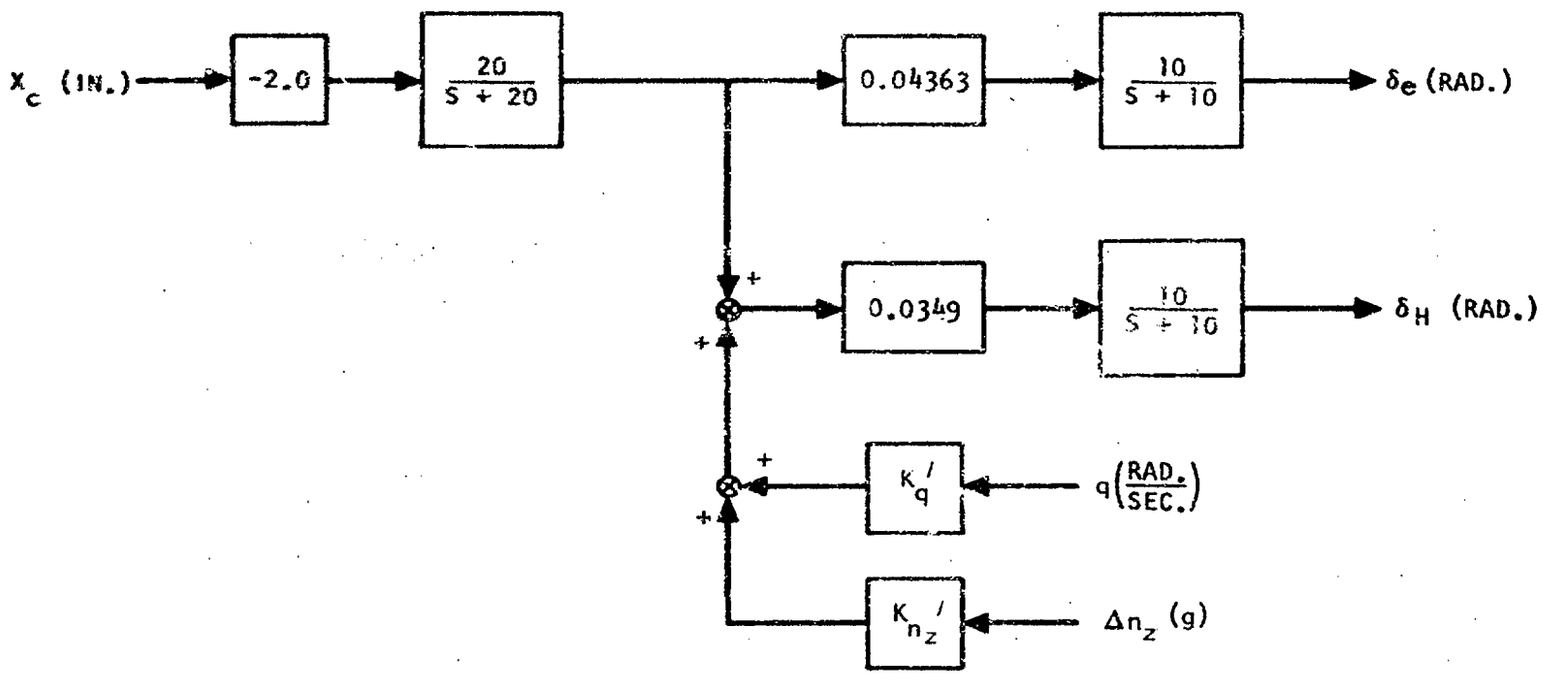

Figure 72. Longitudinal Axis Control and Augmentation System for Zero $M_{\delta e}$ Case

more. Transfer functions for θ/χ_c for the baseline augmented aircraft are given in Appendix III for all variations of $M_{\delta H}$ studied.

ANALYSIS OF AIRCRAFT CAPABILITY TO ACHIEVE STALL ANGLE OF ATTACK FROM TRIM

The maximum angle of attack used in the following analysis was computed from the equation:

$$\left(\frac{L_{TOT}}{T_{pe}}\right)_{\alpha_{max}} = \left(\frac{N_{TOT}}{T_{pe}}\right)_{\alpha=0} + \left(\frac{N_{TOT_\alpha}}{T_{pe}}\right)\alpha_{max}$$

The above coefficients are defined in Reference 4. At the baseline trim flight condition, α_{max} was computed to be approximately 21.0 degrees.

In analyzing the aircraft's capability to reach stall angle of attack from trim, the 6 DOF digital simulation program was used. The program computes initial trim angle of attack, glide slope angle, pitch attitude angle, and horizontal stabilizer position. Input initial conditions were a velocity of 1.0.0 ft/sec. a flap deflection of 46.0 degrees, weight of 160,000 lbs., and full thrust per engine.

The coefficients varied with respect to aircraft capability to achieve α_{max} were M_q, $M_{\dot\alpha}$, M_α, $M_{\delta H}$, $M_{\delta e}$, $Z_{\delta H}$, and $Z_{\delta e}$. Increments of -5.38, -1.29, and -1.83 were added to the baseline values of M_q, $M_{\dot\alpha}$, and M_α respectively to determine the sensitivity of the coefficients on α stall capability. $M_{\delta e}$, $Z_{\delta H}$, and $Z_{\delta e}$ were each independently made zero to determine their effect on α_{max}, and $M_{\delta H}$ was multiplied by a constant 0.28 to determine its effect. In all cases where the aircraft was capable of trimming, the required stall angle of attack was achieved.

It is worth noting that several cases were run in which an initial trim was not achieved because of coefficient magnitudes selected. These included M_α values of -2.36 and -3.54 and a value of $M_{\delta H} = 0$. Of these cases, stall angle of attack was achieved with full column input for the $M_\alpha = -2.36$ and $M_{\delta H} = 0$ cases. Stall angle of attack was not achieved for the -3.54 case. In the case of $M_{\delta H} = 0$ the aircraft could not trim because this system is mechanized through the horizontal stabilizer, as a result, an initial out of trim pitching acceleration of -0.088 rad./sec.^{2} was measured from time histories. Even with this amount of initial nose down accleration the aircraft achieved stall angle of attack when full elevator was applied through the column. The results of these analysis in terms of stall angle of attack are shown in Table IX.

The values of -2.36 and -3.54 for M_α were initially selected as being typical values which result in complex short period roots and are thus possible values which might be encountered in a given aircraft design. For the baseline configuration the high stiffness resulting from these

TABLE IX

EFFECT OF LONGITUDINAL COEFFICIENT VARIATION ON AIRCRAFT CAPABILITY TO ACHIEVE STALL ANGLE OF ATTACK FROM TRIM

Coefficient	Normal Value at Trim	Coefficient Variation Multiple	Analyzed Coefficient Value	α_{i_c}	$\delta_{H_{i_c}}$	Aug.		A/C Trim		α Stall Achieved	
						Off	On	Yes	No	Yes	No
M_q	-0.598	9.0	-5.38	5.03°	-4.78°	X		X		X	
M_q	-0.598	9.0	-5.38	5.03°	-4.78°		X	X		X	
$M_{\dot{\alpha}}$	-0.322	4.0	-1.29	5.03°	-4.78°	X		X		X	
$M_{\dot{\alpha}}$	-0.322	4.0	-1.29	5.03°	-4.78°		X	X		X	
M_α	-0.059	-32.	-1.89	6.90°	-16.4°	X		X		X	
M_α	-0.059	-42.	-2.36	7.48°	-20.0°	X			X	X	
M_α	-0.059	-62.	-3.54	7.48°	-20.0°	X			X		X
$M_{\delta H}$	-1.086	0.28	-0.34	6.95°	-16.7°	X		X		X	
$M_{\delta H}$	-1.086	0.28	-0.34	6.95°	-16.7°		X	X		X	
$M_{\delta H}$	-1.086	0.0	0.0	7.48°	-20.0°	X			X	X	
$M_{\delta H}$	-1.086	0.0	0.0	7.48°	-20.0°		X		X	X	
$M_{\delta e}$	-1.184	0.0	0.0	5.03°	-4.78°	X		X		X	
$M_{\delta e}$	-1.184	0.0	0.0	5.03°	-4.78°		X	X		X	
$Z_{\delta H}$	-9.239	0.0	0.0	4.24°	-4.82°	X		X		X	
$Z_{\delta H}$	-9.239	0.0	0.0	4.24°	-4.82°		X	X		X	
$Z_{\delta e}$	-10.07	0.0	0.0	5.03°	-4.78°	X		X		X	
$Z_{\delta e}$	-10.07	0.0	0.0	5.03°	-4.78°		X	X		X	

magnitudes of M_α in combination with the baseline M_{δ_H} resulted in failure to achieve an intitial trim. A brief 2 degree-of-freedom analytical study has been conducted to determine the maximum stable value of M_α capable of being trimmed with the baseline M_{δ_H} and, if needed, the use of partial elevator to augment the trim provided by the horizontal stabilizer. These data are presented in Appendix V.

The data of Appendix V show that for the baseline aircraft a maximum stable M_α of -1.8 can be trimmed by using full horizontal stabilizer. When elevator is used to augment the horizontal stabilizer, i.e., elevator is added after the horizontal has been trimmed to full travel, an M_α = -2.9 can be trimmed using 50% of available elevator. This study also shows the effect of variations in Z_α, and M_{δ_H} on trim requirements.

COEFFICIENT ACCURACY REQUIREMENTS - UNAUGMENTED AIRCRAFT

To determine coefficient accuracy requirements for the basic aircraft in each axis, two parameters were measured from the parameter variation data plots previously presented. The parameters measured from these plots included the sensitivity (SENS) and the aerodynamic coefficient design margin (DMC) of each parameter with respect to the normalized baseline value and the appropriate performance level.

LATERAL-DIRECTIONAL AXES

For the lateral-directional axes, the design margins in each case were measured from applicable Terminal Flight Phase Category C requirements of Reference (1). In most cases these were selected as the Level 3 requirement since the unaugmented configuration represents a failure state configuration and thus can be considered to have degraded performance. Only in the case of the control surface effectiveness and sideslip excursion parameters were Level 1 requirements retained for the augmentation failure mode configuration. These margins are defined in Table X for each of the coefficients analyzed. They represent the design margins which were designed into the baseline configuration. These are expressed in multiples of the baseline value with respect to the indicated reference levels. These data indicate that where the appropriate requirement levels are met, the design margins are generally in excess of

TABLE X. UNAUGMENTED LATERAL-DIRECTIONAL SENSITIVITIES AND DESIGN MARGINS

Coefficient	τ_R		τ_S		ζ_d		ω_{n_d}		ω_ϕ/ω_{n_d}		ψ_t		ζ_{3c}		$\frac{\phi_{osc}}{\phi_{av}}$		$\frac{\lvert\Delta\beta_{max}\rvert}{\phi_1} * \frac{\lvert\pm\rvert}{\beta}\rvert_d$		$\frac{\Delta\beta_{max}}{\phi_1}$	
	SENS.	% DMC (LEVEL 3)	SENS.	% DMC (LEVEL 3)	SENS.	% DMC (LEVEL 3)	SENS.	% DMC (LEVEL 3)	SENS.	% DMC (design guide)	SENS.	% DMC (LEVEL 1)	SENS.	% DMC (LEVEL 1)	SENS.	% DMC (LEVEL 2)	SENS.	% DMC (LEVEL 1)	SENS.	% DMC (LEVEL 1)
L_p	-0.43	> -100	-0.63	-55	+1.06	> -100	+0.073	> -100	-0.[illegible]	> -100	0.0	*2	+0.108	+265.	-0.77	> -100.	-0.54	*2	+.087	> -100
L_r	-0.07	> -300	+1.97	+20	+0.265	> -300	+0.102	> -100	-0.11[illegible]	-100	+0.045		-0.031	> -300.	-1.08	> -100.	-0.078		+.087	> -100
L_β	-0.13	> -300	-1.18	-25	-1.32	> +500	+0.022	*1	+0.046	> -100	+0.022		0.0	NA	+7.7	-60.	+0.207		-.062	> -100
L_{δ_a}	0.0	NA	0.0	NA	0.0	NA	0.0	NA	-0.081	> -100	0.0		-0.35	-55	+0.231	> -100			0.0	> -100
L_{δ_r}	0.0	NA	0.0	NA	0.0	NA	0.0	NA	0.0	NA	+0.11		0.0	NA	0.0	NA				
N_p	+0.017	> +500	+0.12	> +100	+0.177	> -100	-0.059	> +500	+0.069	> -100	-0.022		-0.015	> +500	+0.056	> -100	-0.36		-0.175	> -500
N_r	+0.007	> +500	-1.97	-30	+0.80	> -100	-0.044	> +500	+0.058	> -100	-0.078		0.0	> +300	+4.61	+100	+0.104		+0.075	> +500
N_β	+0.026	> +500	+2.36	+40	+1.6	-85	+0.38	> -100	+0.162	-75	-0.034		0.0	> +500	-7.7	-60	-0.78		-0.45	-100
N_{δ_a}	0.0	NA	0.0	NA	0	NA	0	NA	+0.017	> -300	0.0		-0.015	> -300	0.0	*1	-0.155		0.0	> -100
N_{δ_r}	0.0	NA	0.0	NA	0	NA	0	NA	0	NA	+1.05		0.0	NA	0.0					
Y_r	0.0	NA	+0.078	> +500	0	> +500	0	> +500	-0.011	> +500	0.0									
Y_β	-0.017	> -300	-0.078	> -100	+0.441	> -100	+0.015	> -100	+0.023	> -100	0.0		0.0	NA	-0.51	> -100	-0.226		-0.175	> -100
Y_{δ_r}	0.0	NA	0.0	NA	0	NA	0.0	NA	0.0	NA	-0.022	*2	0.0	NA				*2		

*1 Baseline is at a minimum in terms of this parameter.
*2 Unaugmented vehicle does not meet the minimum Category C performance level required (level 1).

Symbols and Abreviations:

> Greater than
+ Increase in baseline value
- Decrease in baseline value
NA NOT APPLICABLE (Indicates variations in this coefficient do not affect the indicated H.Q. parameter).

one baseline unit over the minimum requirement and in many cases they are five baseline units away from the minimum reference level. The sign associated with each design margin indicates the direction in which the baseline coefficient must vary to reach the reference level. A minus DMC indicates a change in coefficient value toward zero and a plus DMC indicates a change in coefficient value away from zero is necessary to reach the reference level. Where requirement levels are not met, ψ_t and $|\Delta\beta/\phi_1| \times |\phi/\beta|_d$, the design margins are not defined. The design margins closest to the minimum reference levels appear for the $1/\tau_s$ parameter. These include the margins for Lp, L_r, L_β, N_r, and N_β. These margins are on the order of 20 to 50 percent of the Level 3 reference.

The sensitivities for each coefficient are also shown in Table X. These were measured over a ±50 percent range of the baseline coefficient value. They are normalized to both the coefficient value and the baseline H.Q. parameter value.

Table XI identifies the coefficients in the order of their relative sensitivities on each parameter. These results indicate that N_β contributes the greatest sensitivity to seven of the ten flying qualities parameters listed. It exerts the prime influence on the basepoint values of

τ_s, ζ_d, ω_{n_d}, ω_ϕ/ω_{n_d}, $|\Delta\beta_{max}/\phi_1| \times |\phi/\beta|_d$, ϕ_{osc}/ϕ_{AV}, and $|\Delta\beta_{max}/\phi_1|$.

The next most important coefficients in the order of sensitivity magnitudes are L_β, $N_{\delta r}$, Lp, and $L_{\delta a}$. These coefficients are the prime influence on ϕ_{osc}/ϕ_{AV}, ψ_t, τ_R, and t_{30} respectively. Of the coefficients second in order of importance, Lp influences $|\Delta\beta_{max}/\phi_1| \times |\phi/\beta|_d$, t_{30}, and ω_ϕ/ω_{n_d} while L_β and Nr each provide sensitivities second in order of importance in two flying qualities parameters. These are τ_R and ζ_d for L_β, and $1/\tau_s$ and ϕ_{osc}/ϕ_{AV} for N_r.

Analysis of the relative sensitivities in this table for each coefficient show that in some cases significant percentages occur for coefficients as low as sixth in order of importance and in other cases the relative sensitivities decrease more rapidly as order of importance decreases. This implies that comparing sensitivity data by this method, i.e., order of importance, would not significantly reduce the amount of coefficient accuracy requirements which must be determined. However, comparing the relative sensitivities for each flying qualities parameter indicates some coefficient accuracies for individual H.Q. parameters are not significant in terms of the other coefficient sensitivities involved. More specifically, these coefficient variation data indicate that accuracy requirements with relative sensitivities less than 0.25 are not significant in terms of their effect on individual flying qualities parameters. The coefficients for which accuracy requirements should be defined on this basis are listed in Table XII. This table shows the coefficients for which accuracy requirements should be established in terms of each flying qualities parameter. The method of establishing the requirements for these coefficients is discussed in Section II.

TABLE XI. UNAUGMENTED AIRCRAFT LATERAL-DIRECTIONAL COEFFICIENTS IN ORDER OF IMPORTANCE TO FLYING QUALITIES PARAMETERS

Handling Qualities		Y_β	L_p	L_r	L_β	L_{δ_a}	L_{δ_r}	N_p	N_r	N_β	N_{δ_a}	N_{δ_r}
τ_λ (sec)	R.S.		1.0		0.3							
	O.O.I.		1		2							
$1/\tau_s$ $(sec)^{-1}$	R.S.		-0.27	+.66	-0.5			0.05	-0.84	1.0		
	O.O.I.		3	3	4			6	2	1		
ζ_d	R.S	+0.275	+0.66	+0.165	-0.82			+0.11	+0.5	1.0		
	O.O.I.	5	3	6	2			7	4	1		
ω_{n_d} $(\frac{rad}{sec})$	R.S.			+0.26						1.0		
	O.O.I.			2						1		
ω_ϕ/ω_{n_d}	R.S.		-0.81	-0.75						1.0		
	O.O.I.		2	3						1		
ϕ_1 (deg)	R.S.						-0.105					1.0
	O.O.I.						2					1
t_{30} (sec)	R.S.		-0.315			1.0						
	O.O.I.		2			1						
$\frac{\phi_{osc}}{\phi_{av}}$	R.S.	-0.066	-0.10	-0.14	1.0	+0.03			+0.6	-1.0		
	O.O.I.	5	4	3	1	6			2	1		
$\left[\frac{\Delta\beta}{\phi_1}\right] \times \left[\frac{\phi}{\beta}\right]_d$	R.S.	+0.295	+0.69		-.265	+.69		+.46	-0.13	1.0	+0.19	
	O.O.I.	4	2		5	2		3	7	1	6	
$\left[\frac{\Delta\beta}{\phi_1}\right]$	R.S.	+0.39						+0.39		1.0		
	O.O.I.	2						2		1		
Order of Importance (O.O.I.)												
1	N.O.T.A.		1		1	1				7		1
2	N.O.T.A.	1	3	1	2	1	1	1	2			
3	N.O.T.A.		1	3				1				
4	N.O.T.A.	1	1		1				1			
5	N.O.T.A.	2	1		1							
6	N.O.T.A.			1		1		1			1	
7	N.O.T.A.							1	1			

N.O.T.A. - Number of times appearing.
R.S. - Relative sensitivity.

TABLE XII

UNAUGMENTED LATERAL-DIRECTIONAL COEFFICIENTS FOR DEFINITION OF ACCURACY REQUIREMENTS VERSUS FLYING QUALITIES PARAMETERS

H.Q. PARAMETERS	AERODYNAMIC COEFFICIENTS
τ_R	L_p, L_β
$1/\tau_S$	N_β, N_r, L_r, L_β, L_p
ζ_d	N_β, L_β, L_p, N_r, Y_β
ω_{nd}	N_β, L_r
ω_ϕ / ω_n	N_β, L_p, L_r
ψ_t	$N_{\delta r}$
t_{30}	$L_{\delta a}$, L_p
$\frac{\phi_{osc}}{\phi_{A_V}}$	L_β, N_β, Y_β, N_r
$\left\lvert\frac{\Delta\beta}{\phi_1}\right\rvert \times \left\lvert\frac{\phi}{\beta}\right\rvert_d$	N_β, $L_{\delta a}$, L_p, N_p, Y_β, L_β
$\left\lvert\frac{\Delta\beta}{\phi_1}\right\rvert$	N_β, Y_β, N_p

Coefficients having sensitivities which significantly influence the various flying qualities are summarized in Figure 73. This figure also shows that the baseline unaugmented configuration either meets or exceeds the minimum H.Q. requirement specified for augmentation failure mode operation in all cases except yaw control effectiveness and the sideslip excursion requirement,

$$\left|\Delta\beta_{max}/\phi_1\right| \times \left|\phi/\beta\right|_d .$$

For some parameters, such as, frequency, damping and roll time constant, Level 1 requirements are met and exceeded by a comfortable margin.

LONGITUDINAL AXIS

For this axis the design margins shown in Table XIII were measured from the Level 3 and Level 2 IFR requirements of Reference (1). The unaugmented $\omega_{n_{sp}}$ did not meet the Level 2 IFR requirement and therefore these are not defined. In most cases the coefficient design margins for ζ_{sp} and ζ_p are outside the coefficient parameter variation ranges investigated and the symbol LDM indicates that the coefficient design margin is greater than the percentage range of the individual coefficient being investigated.

This table also shows the sensitivities which were measured over a ± 50 percent range about the baseline value. In many cases these sensitivities are quite small and, as a result, do not significantly influence coefficient prediction accuracy requirements for a given flying qualities parameter.

The importance of the individual coefficients on each flying quality parameter is summarized in Table XIV. This table lists the sensitivities relative to the maximum (R.S.) for each parameter and identifies the number of times each coefficient appears in each order of importance. These data show that M_V, M_q and Z_α have the most significant sensitivities with respect to these flying qualities parameters. Other coefficients having relatively large sensitivities are $M_{\dot{\alpha}}$, Z_V, and X_V. These data reflect the fact that for the baseline condition investigated M_α, usually the dominant term in $\omega_{n_{sp}}$, is numerically quite small, and as a result comes out a poor sixth in terms of order of importance.

The coefficients for which accuracy requirements or design margin requirements should be determined are listed in Table XV. These represent coefficients whose relative sensitivities in terms of each flying qualities parameter are equal to or greater than 0.1. The methods for establishing accuracy and/or design requirements is defined in Section II.

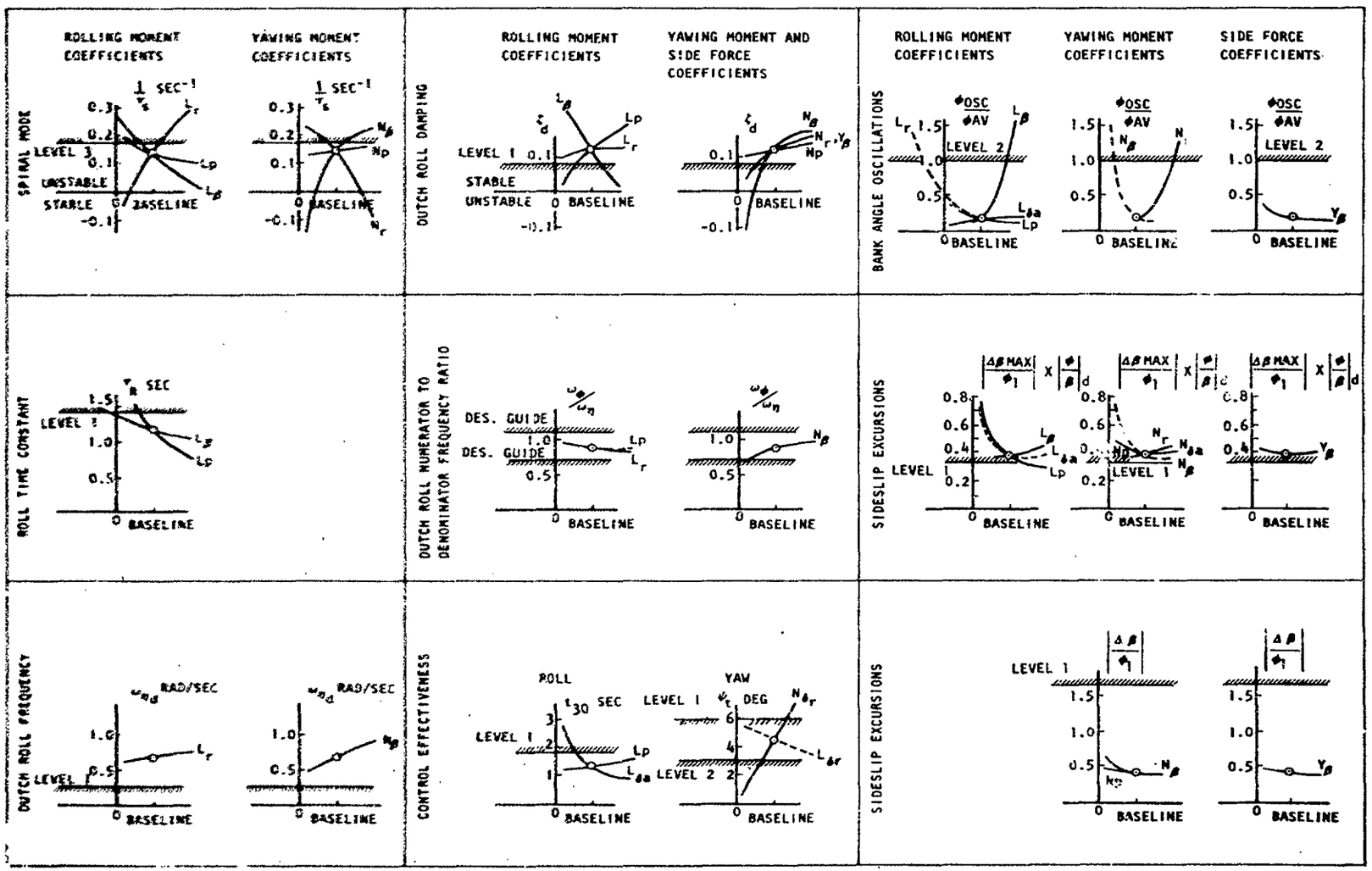

Figure 73. Summary of Significant Parameters on Unaugmented Lateral - Directional Flying Qualities.

Table XIII

UNAUGMENTED LONGITUDINAL SENSITIVITIES AND DESIGN MARGINS

Coefficient	ζ_{sp}		ζ_p		$\omega_{n_{sp}}$		ω_{n_p}
	SENS	%DMC Level 2IFR	SENS	%DMC Level 3	SENS	%DMC Level 2IFR	SENS
X_V	-0.000039	LDM	1.62	LDM	0.00054	*1	-0.0032
X_α	-0.0014	LDM	0.53	LDM	0.0014	*1	0.0124
X_{δ_H}	0.0	LDM	0.0	LDM	0.0	*1	0.0
Z_V	0.086	LDM	2.18	LDM	-0.081	*1	0.135
Z_α	-0.178	LDM	+0.154 -0.508	LDM	0.540	*1	-0.068
Z_{δ_H}	0.0	LDM	0.0	LDM	0.0	*1	0.0
Z_{δ_e}	0.0	LDM	0.0	LDM	0.0	*1	0.0
M_V	-0.295	LDM	-5.2	LDM	0.230	*1	0.264
M_α	-0.039	LDM	-0.202	LDM	0.0445	*1	0.0126
$M_{\dot{\alpha}}$	0.255	-120	0.340	LDM	-0.0510	*1	0.0489
M_q	0.041	LDM	5.2	LDM	0.278	*1	-0.382
M_{δ_H}	0.0	LDM	0.0	LDM	0.0	*1	0.0
M_{δ_e}	0.0	LDM	0.0	LDM	0.0	*1	0.0

*1 Unaugmented Baseline aircraft fails minimum $\omega_{n_{sp}}$ requirement.

LDM These coefficient design margins are outside the parameter ranges investigated.

TABLE XIV

LONGITUDINAL COEFFICIENTS IN ORDER OF IMPORTANCE FOR UNAUGMENTED CONFIGURATION ON FLYING QUALITIES PARAMETERS

Flying Qualities		M_V	M_α	$M_{\dot{\alpha}}$	M_q	Z_V	Z_α	X_V	X_α
$\omega_{n_{sp}}$	R.S.	.42	.08	-.10	.51	-.15	1		
	O.O.I.	3	6	5	2	4	1		
ζ_{sp}	R.S.	1.	+.13	-.86	-.14	-.29	+.60		
	O.O.I.	1	6	2	5	4	3		
ω_{np}	R.S.	-.69	-.03	-.13	1	-.35	+.18		-.03
	O.O.I.	2	6	5	1	3	4		6
ζ_p	R.S.	-1.	+.04	+.07	1	+.42	-.10	+.31	+.10
	O.O.I.	1	6	5	1	2	4	3	4
Order of Importance (O.O.I.)		Number of Times Appearing							
1st		2			2		1		
2nd		1		1	1	1			
3rd		1				1	1	1	
4th						2	2		1
5th				3	1				
6th			4						1

R.S. Relative Sensitivity.

TABLE XV

UNAUGMENTED LONGITUDINAL COEFFICIENTS FOR DEFINITION OF ACCURACY REQUIREMENTS VERSUS FLYING QUALITIES PARAMETERS

H. Q. PARAMETERS	AERODYNAMIC COEFFICIENTS
$\omega_{n_{s_p}}$	Z_α , M_q , M_V , Z_V , $M_{\dot{\alpha}}$
ζ_{s_p}	M_V , $M_{\dot{\alpha}}$, Z_α , Z_V , M_q , M_α
ω_{n_p}	M_q , M_V , Z_V , Z_α , $M_{\dot{\alpha}}$
ζ_p	M_q , M_V , Z_V , X_V , X_α , Z_α

The coefficients with relative sensitivities greater than 0.1 are summarized in Figure 74 for ω_{n_p}, $\omega_{n_{sp}}$, ζ_p and ζ_{sp}. The minimum requirements are shown for $\omega_{n_{sp}}$ and ζ_{sp}. That for the phugoid damping Level 3 occurs at $\zeta_p = -0.725$ and has not been shown. All of the minimum longitudinal flying qualities requirements in this figure are expressed in terms of the baseline frequencies. No requirement for phugoid frequency is applicable. Since the phugoid roots are all complex, the only Level 3 requirement which applies is that for phugoid damping.

It is noted, that the coefficients shown as being most influential on these flying qualities are not necessarily those normally dominant in the conventional flight **regime.** Nor, has the present study been sufficiently exhaustive to assure that these terms predominate the STOL flight regime and all possible c.g. positions. They are however representative of the trim condition at which this study was conducted and represent the effect of coefficient variations about that point.

COEFFICIENT ACCURACY REQUIREMENTS - BASELINE AUGMENTED AIRCRAFT

In determining coefficient accuracy requirements for the baseline augmented aircraft, coefficient gain margins (DMC) were determined for each of the coefficients with respect to either sensitive lateral-directional or longitudinal flying qualities. The DMC were determined for each of the lateral-directional and longitudinal coefficients with respect to Level 1 requirements. In addition, the coefficient sensitivities (SENS) were also defined in each axis for the baseline augmented vehicle.

LATERAL-DIRECTIONAL

The data analysis for the baseline augmentation system utilized a three-step procedure for each coefficient value investigated. This procedure involved a matrix computation for τ_R, $1/\tau_s$, ζ_d, ω_{nd} and ω_ϕ/ω_{nd} for a given aerodynamic coefficient value. If the Level 1 requirements were met for each of these parameters, pulse and/or step time histories were run to establish such parameters as ϕ_{osc}/ϕ_{AV}, t30, ψ_t, $|\Delta\beta_{max}/\phi_1| \times |\phi/\beta|_J$, and $|\Delta\beta_{max}/\phi_1|$.

The order in which step or impulse time histories were run varied with the type of coefficient being investigated. If at any time during this analysis procedure appropriate level requirements were not met, the augmentation system was redefined in terms of either a gain change or configuration revision and the analytical process was repeated. No additional data were run in terms of time histories for augmentation configurations not meeting Level 1 requirements. The data run in this manner for the baseline augmented configuration are presented in Table XVI. The sensitivities and gain margins in this table are for the control systems of Figures 1 and 2. The gains for the baseline configuration are shown in Table XVII.

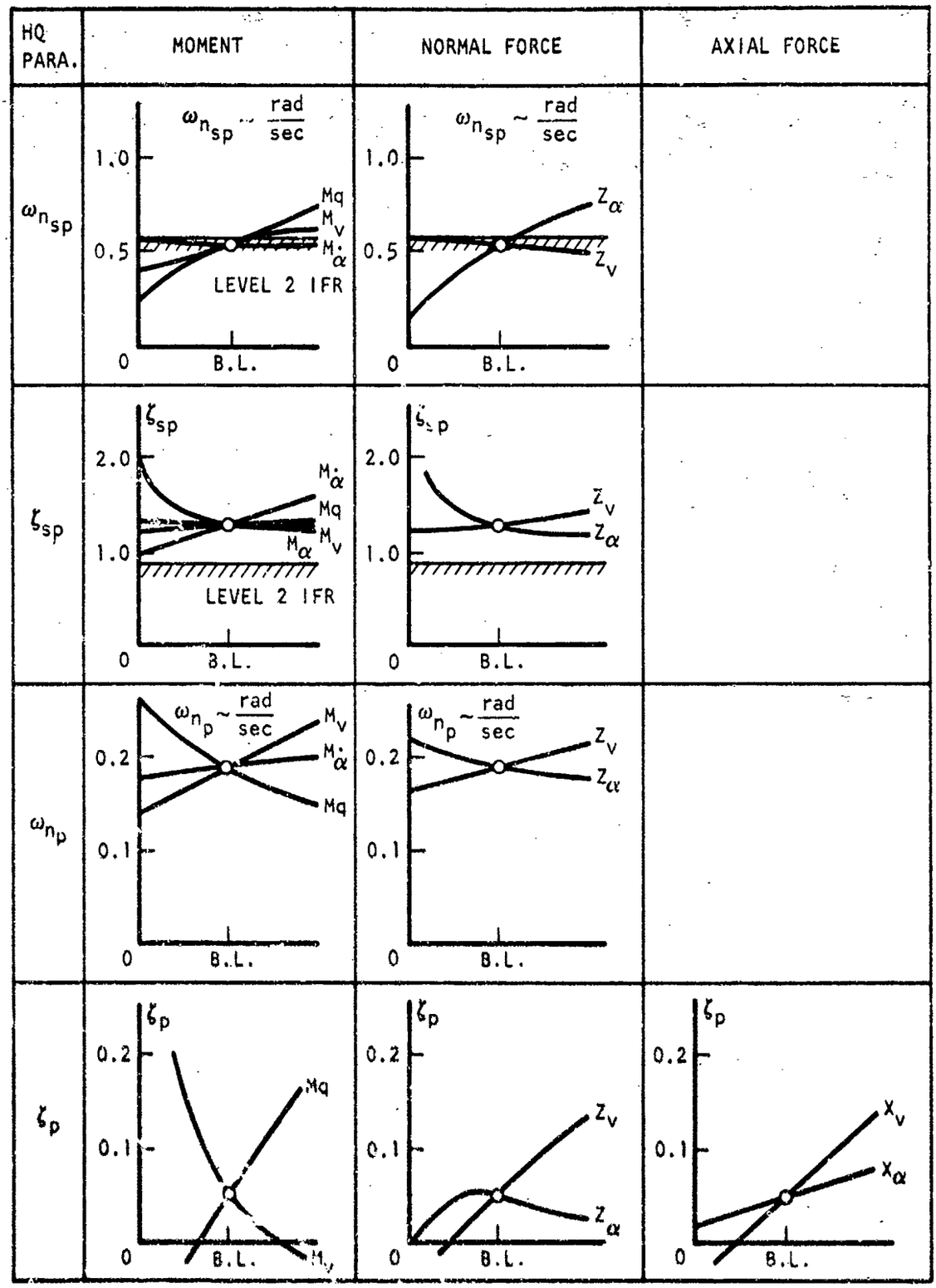

Figure 74. Summary of Longitudinal Coefficient Variations on Unaugmented Flying Qualities.

Reproduced from best available copy.

TABLE XVI. BASELINE AUGMENTED LATERAL-DIRECTIONAL SENSITIVITIES AND DESIGN MARGINS

Coeff.	v_R SENS	% DMC (Level 1)	v_s SENS	% DMC (Level 1)	ζ_d SENS	% DMC (Level 1)	ω_{n_d} SENS	% DMC (Level 1)	ω_ϕ/ω_{n_d} SENS	% DMC (Design Guides)	ψ_t SENS	% DMC (Level 1)	t_{30} SENS	% DMC (Level 1)	ϕ_{osc}/ϕ_{av} SENS	% DMC (Level 1)	$[\Delta\beta/\phi_1]\times[\phi/\beta]_d$ SENS	% DMC (Level 1)	$[\Delta\beta/\phi_1]$ SENS	% DMC (Level 1)
L_p	-0.258	LDM	0.50	+50.0	0.335	LDM	-0.033	LDM	0.036	LDM	DNA	DNA	+0.163	+130.	DNA	DNA	DNA	DNA	DNA	DNA
L_r	0.046	LDM	5.96	+5.0	[illegible]	LDM	0.14	LDM	-0.110	83.0	DNA	DNA	DNA	DNA	DNA	DNA	DNA	DNA	DNA	DNA
L_β	-0.099	LDM	[illegible]	+10.[illegible]	[illegible]	LDM	0.122	LDM	0.098	+120.0	DNA	DNA	DNA	DNA	DNA	DNA	DNA	DNA	DNA	DNA
L_{δ_a}	0.055	+90	-2.70	-20.0	0.090	LDM	-0.125	LDM	0.140	-65.0	DNA	DNA	DNA	DNA	DNA	DNA	DNA	DNA	DNA	DNA
L_{δ_r}	0.205	LDM	-5.53	-75.0	0.590	LDM	0.102	LDM	-0.089	110.0	DNA	DNA	DNA	DNA	DNA	DNA	DNA	DNA	DNA	DNA
N_p	-0.0505	LDM	-0.067	LDM	-0.033	LDM	-0.0157	LDM	0.0064	LDM	-0.10084	LDM	-0.0128	LDM	0.261	LDM	-0.102	LDM	-0.045	LDM
N_r	-0.157	LDM	-2.25	15.0	-0.0225	LDM	-0.117	LDM	0.049	LDM	DNA	DNA	DNA	DNA	DNA	184.0	DNA	DNA	DNA	DNA
N_β	0.061	LDM	1.13	25.0	[illegible].770	LDM	0.25	LDM	0.064	LDM	DNA	DNA	DNA	DNA	DNA	DNA	DNA	DNA	DNA	DNA
N_{δ_a}	-0.006	LDM	-0.765	LDM	0.0525	LDM	-0.0047	LDM	0.049	LDM	-0.0017	LDM	-0.0085	LDM	0.055	LDM	-0.002	LDM	-0.00007	LDM
N_{δ_r}	0.335	LDM	0.70	50.0	0.502	LDM	-0.156	LDM	-0.025	LDM	1.10	1.3	DNA	DNA	DNA	DNA	DNA	DNA	DNA	DNA
Y_β	0.107	LDM	0.70	+100	0.59	LDM	0.455	LDM	0.127	LDM	DNA	DNA	DNA	DNA	DNA	DNA	DNA	DNA	DNA	DNA
Y_{δ_r}	0.015	LDM	0.035	40.0	0.15	400.0	-0.210	LDM	-0.076	LDM	DNA	DNA	DNA	DNA	DNA	DNA	DNA	DNA	DNA	DNA

	Multiple for Which MIL Not Met	Limiting MIL Requirement	Aug Gains Affected	Aug Loop Affected	Figure in Which Final Aug is Defined	Coeff. Limit for B.L. Augmentation: Lower Limit Mult	Lower Limit Value	Upper Limit Mult	Upper Limit Value
L_p	5X	$1/v_s, t_{30}$	K_{pr}	Yes	20	1.5X	-0.985	<0.2X *1	>-0.131
L_r	1/5X, 5X	$1/v_s$	K_{rh}	No	1,2	<0 *1	<0	1.05X	1.05
L_β	-5X, 5X	$1/v_s, \omega_{n_d}$	K_β, K_{pr}	Yes	21,22	2.2X	-1.63	0.9X	-0.675
L_{δ_a}	1/5X, 5X	$t_{30}/1/v_s$	K_{pa}, K_{rh}	Yes	IV-10	0.9X	0.0081	>5X *1	>0.045
L_{δ_r}	-5X, 5X	$1/v_s, \omega_{n_d}$	K_{rh}, K_{dr}	Yes	25	0.25X	0.122	>5X *1	>2.44
N_p	-5X	$1/v_s$	K_{rh}	No	1,2	<-5X *1	<-0.211	5X *1	>0.351
N_r	1/5X, 5X	$1/v_s, \phi_{osc}/\phi_{av}$	K_{pa}, K_{rh}	No	1,2	2.84X	-0.659	0.85X	-0.197
N_β	1/5X, 5X	$\phi_{osc}/\phi_{av}, 1/v_s$	K_r, K_{ry}, K_{rh}	No	1,2	>0.2X *1	>0.066	1.25X	0.491
N_{δ_a}	-5X	$1/v_s$	K_{rh}	No	1,2	-2X	-0.00038	5X *1	>0.00095
N_{δ_r}	1/5X, 5X	$\phi_t, 1/v_s$	K_{da}, K_{rh}	Yes	IV-5	1.5X *2	-0.721	1.5X	-0.721
Y_β	1/5X, 5X	$\phi_{osc}/\phi_{av}, 1/v_s$	K_r, K_{ry}, K_{rh}	No	1,2	2.5X	-0.914	B.L. *1	>-0.36
Y_{δ_r}	5X	ζ_d	K_r, K_{ry}	No	1,2	<0.2X *1	<0.0466	4X	0.932

*1 Exact Limit Undefined

*2 Represents minimum acceptable value for ϕ_1

DNA Data not available (Indicates further investigation was not conducted and these data are not available because of baseline augmentation inability to meet indicated minimum handling qualities requirement)

LDM These coefficient design margins are outside the parameter ranges investigated.

TABLE XVII

SUMMARY OF LATERAL-DIRECTIONAL AUGMENTATION GAINS

Coefficient	K_{pa}	K_r	K_{ny}	K_{rh}	K_β	$K_{\beta r}$	$K_{\delta r}$	K_{pr}
Units	Sec	Sec	Rad/g	Sec	Nondim	Nondim	Nondim	Sec
Baseline	0.85	3.5	1.75	0.80				
5 Lp	-1.98	3.5	1.75	0.80				0.0895
1/5 Lp	Same as baseline case							
5 L_r	0.85	3.5	1.75	5.4				
1/5 L_r	1.60	3.5	1.77	0.0				
-3 L_r	0.85	3.5	1.75	-3.45				
5 L_β	0.85	3.5	1.75	0.80	-3.384	0.10685		
1/5 L_β	0.85	3.5	1.75	1.2				
-3 L_β	0.85	3.5	1.75	0.80	3.384	-0.10685		
5 $L_{\delta a}$	0.17	3.5	1.75	0.16				
1/5 $L_{\delta a}$	0.85	3.5	1.75	3.5				
5 $L_{\delta r}$	0.85	3.5	1.75	0.80			-0.946	
1/5 $L_{\delta r}$	0.85	3.5	1.75	1.0				
-3 $L_{\delta r}$	0.85	3.5	1.75	0.80			0.946	
5 Np	Same as baseline case							
1/5 Np	Same as baseline case							
-5 Np	0.85	3.5	1.75	1.2				
5 Nr	2.0	3.5	1.75	0.0				
1/5 Nr	0.85	3.5	1.75	1.1				
5 N_β	0.85	3.5	1.75	1.5				
1/5 N_β	0.85	3.07	1.83	0.8				
5 $N_{\delta a}$	Same as baseline case							
1/5 $N_{\delta a}$	Same as baseline case							
-3 $N_{\delta a}$	0.85	3.5	1.75	1.0				
5 $N_{\delta r}$	0.85	3.5	1.75	1.0				
1/5 $N_{\delta r}$	Same as baseline case							
5 Y_β	0.85	3.5	1.75	1.0				
1/5 Y_β	0.85	1.12	1.89	0.80				
5 $Y_{\delta r}$	0.85	0.70	0.35	0.80				
1/5 $Y_{\delta r}$	Same as baseline case							

To the extent of the data available, Table XVI shows the sensitivities and coefficient gain margins for each of the flying qualities parameters. The sensitivities indicated are those for a ±50 percent excursion about the baseline value for each coefficient. If the DMC was violated at any time during the range of coefficient values investigated these are also shown. In many cases the augmented sensitivities are quite small and, as a result, the gain margin was not encountered over the range of the coefficient values investigated.

This table also summarizes the limitations of the baseline augmentation system. For each coefficient it identifies the multiple for which the MHQ was not met, it identifies the flying qualities parameter not meeting the requirement and summarizes the changes accomplished to meet the MHQ by identifying whether a simple gain change was necessary or whether redefinition of the augmentation system was required. The figures on which the final versions of augmentation systems meeting all Level 1 requirements are also identified.

Figures 75 through 78 show the effect of baseline augmentation on the sensitivity (SENS) of τ_R, $1/\tau_S$, ζ_d and ω_{nd} for each of the lateral-directional coefficients. In all cases, the flying qualities sensitivity is increased with augmentation on for the control surface coefficients, $L_{\delta a}$, $L_{\delta r}$, $N_{\delta a}$, $N_{\delta r}$, and $Y_{\delta r}$. This result is to be expected since these coefficients do not affect the denominator roots of the unaugmented lateral transfer function.

In comparing the flying qualities sensitivities of the unaugmented to the augmented aircraft, the addition of augmentation reduces ζ_d sensitivity for all the coefficients except for the control surface coefficients. With respect to τ_R, $1/\tau_S$, and ω_{nd}, sensitivities are increased substantially for Y_β with augmentation operative. The rolling and yawing moment coefficients sensitivities for τ_R, $1/\tau_S$ and ω_{nd} may increase or decrease thus affecting the order of importance of the coefficients with respect to flying qualities sensitivity. Table XVIII summarizes the order of importance of the lateral-directional coefficients on τ_R, $1/\tau_S$, ζ_d and ω_{nd} for the baseline augmented aircraft.

Additional results shown in these figures indicate that some other significant changes in the order of importance of the coefficients on flying qualities are realized by the addition of baseline augmentation. The largest changes in sensitivity occur for L_r and N_β with respect to $1/\tau_S$, Y_β with respect to ω_{nd}, and N_β, L_β, and L_p with respect to ζ_d. Table XIX summarizes the important coefficients with respect to τ_R, $1/\tau_S$, ω_{nd} and ζ_d.

Twenty-two of the twenty-nine cases studied for the lateral-directional parameter variation required augmentation analysis due to the failure of baseline augmentation of achieving satisfactory flying quality responses. Of the 22 cases, fourteen only required minor adjustments to the baseline roll augmentation system gains to satisfy spiral mode time

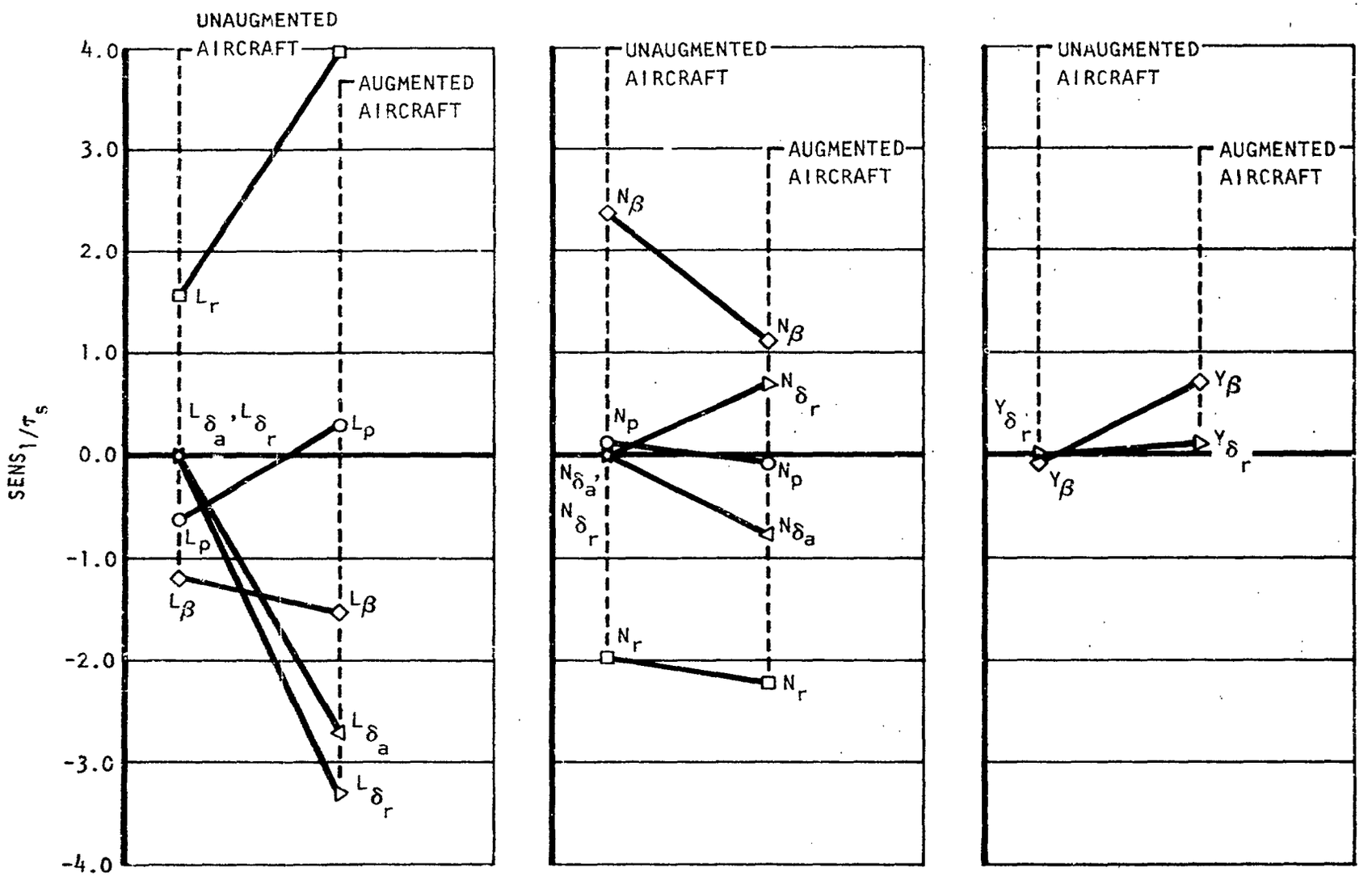

Figure 75. Baseline Lateral-Directional Augmentation Effects on Coefficient Sensitivities for Spiral Mode Time Constant.

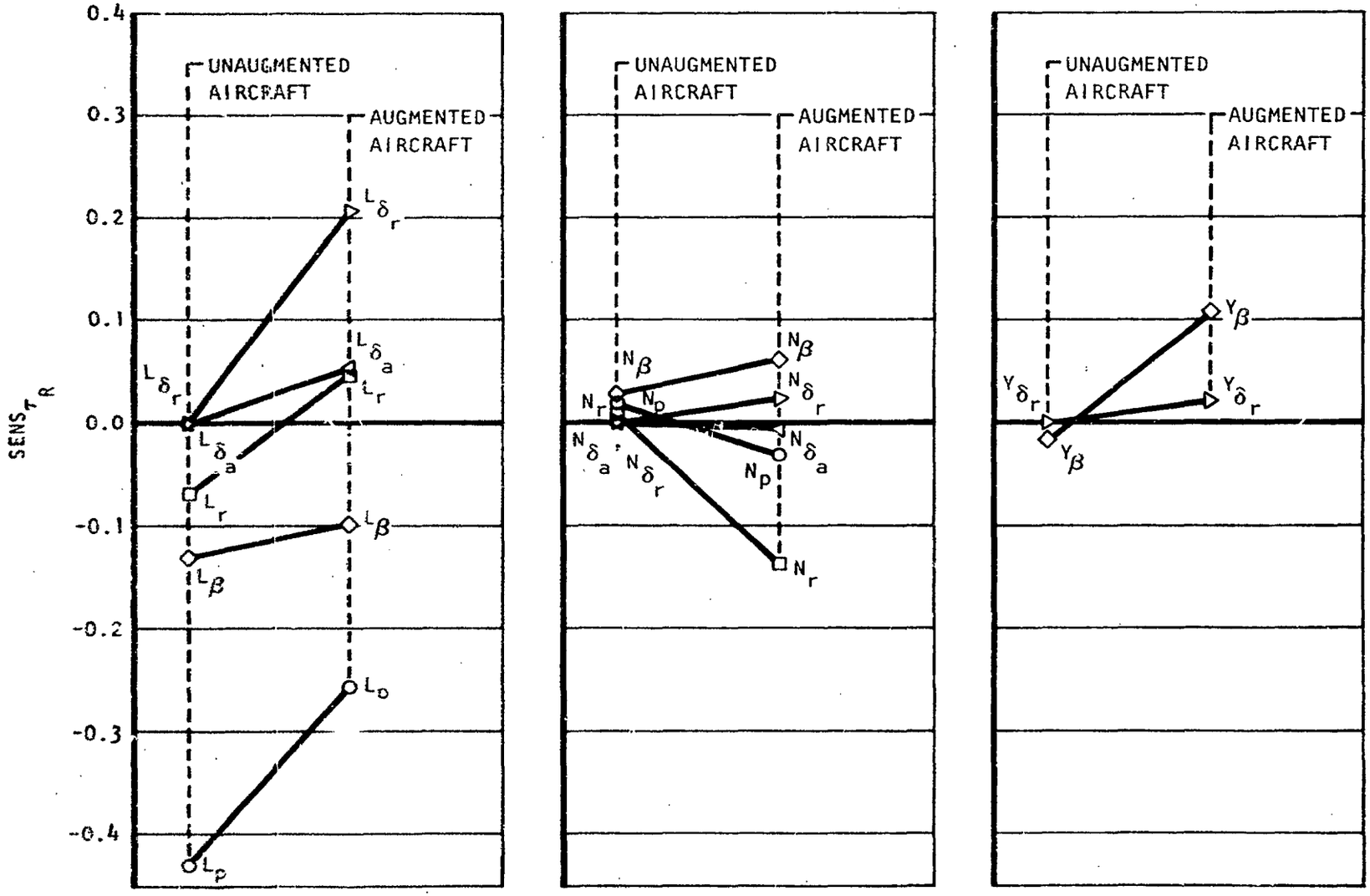

Figure 76. Baseline Lateral-Directional Augmentation Effects on Coefficient Sensitivities for Roll Time Constant.

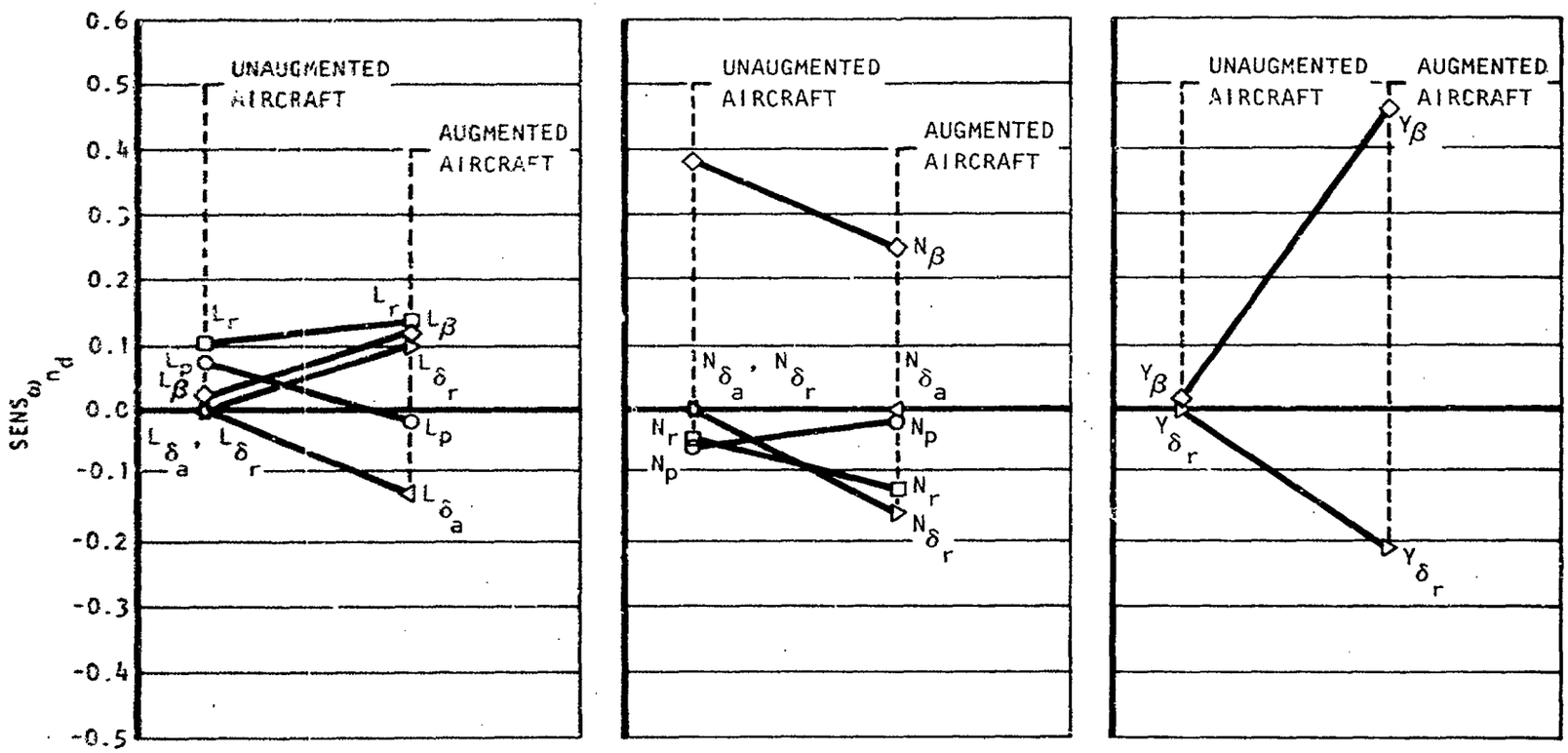

Figure 77. Baseline Lateral-Directional Augmentation Effects on Coefficient Sensitivities for Dutch Roll Natural Frequency.

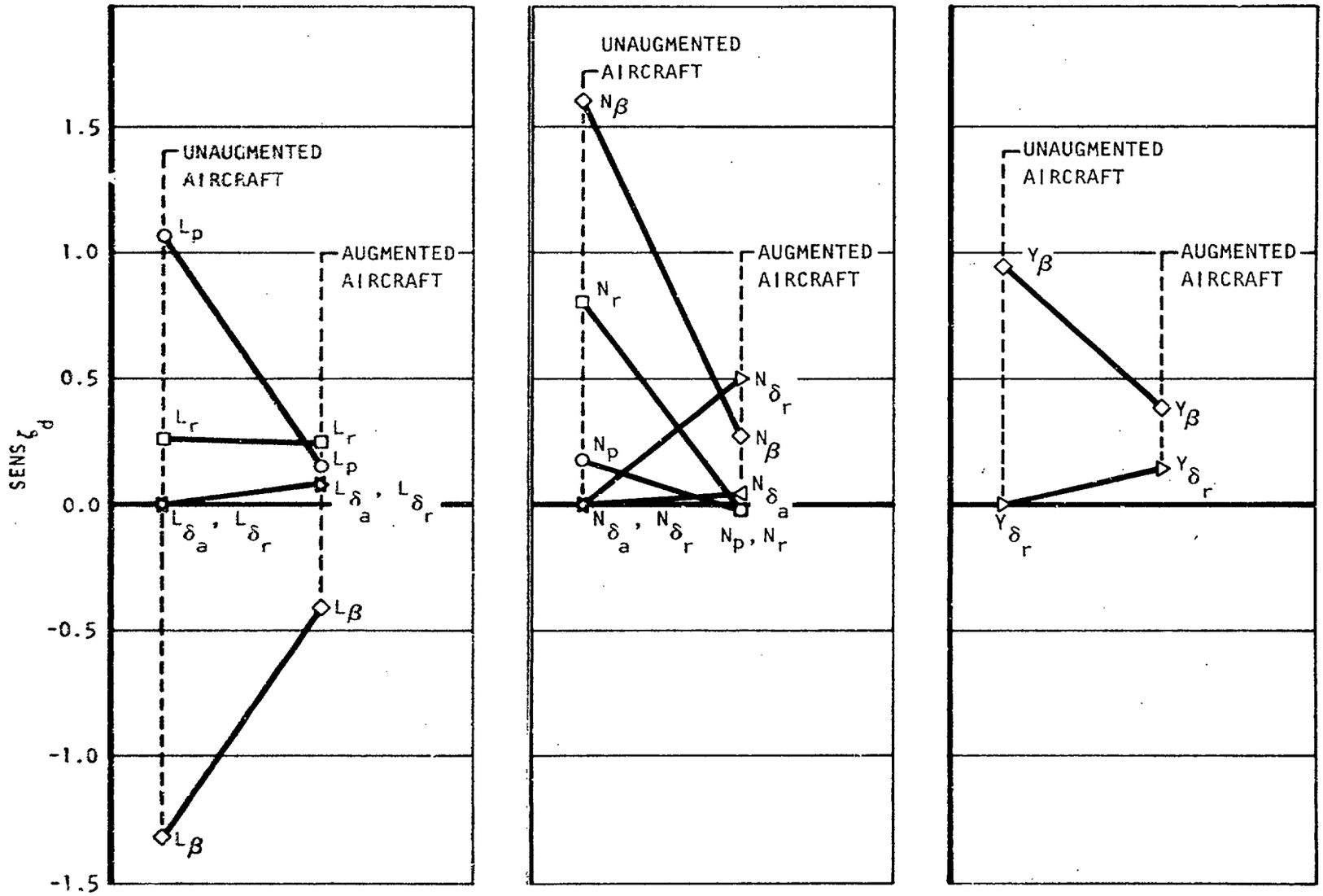

Figure 78. Baseline Lateral-Directional Augmentation Effects on Coefficient Sensitivities for Dutch Roll Damping Ratio.

TABLE XVIII

COEFFICIENTS IN ORDER OF IMPORTANCE FOR BASELINE AUGMENTED AIRCRAFT RESPONSE

Flying Qualities		Y_β	$Y_{\delta r}$	L_p	L_r	L_β	$L_{\delta a}$	$L_{\delta r}$	N_r	N_β	$N_{\delta a}$	$N_{\delta r}$
τ_R	R.S.	-0.41		1.0		0.39		-0.80	0.54			
	O.O.I.	4		1		5		2	3			
$1/\tau_s$	R.S.	0.17	0.03	0.08	1.0	-0.39	-0.69	-0.84	-0.56	0.28	-0.19	0.17
	O.O.I.	8	11	10	1	5	3	2	4	6	7	8
ζ_d	R.S.	0.78	0.30	0.31	0.48	-0.84				0.54		1.0
	O.O.I.	3	7	6	5	2				4		1
ω_{n_d}	R.S.	1.0	-0.46		0.338	0.26	-0.27	0.22	-0.26	0.55		-0.34
	O.O.I.	1	3		5	7	6	9	8	2		4

TABLE XIX

BASELINE AUGMENTED LATERAL-DIRECTIONAL COEFFICIENTS
FOR DEFINITION OF ACCURACY REQUIREMENTS VERSUS
FLYING QUALITIES PARAMETERS

H.Q. PARAMETERS	AERODYNAMIC COEFFICIENTS
τ_R	L_p, $L_{\delta r}$, N_r, Y_β, L_β
$1/\tau_s$	L_r, $L_{\delta r}$, $L_{\delta a}$, N_r, L_β, N_β
ζ_d	$N_{\delta r}$, L_p, Y_β, N_β, L_r, L_p, $Y_{\delta r}$
ω_{n_d}	Y_β, N_β, $Y_{\delta r}$, $N_{\delta r}$, L_r, $L_{\delta a}$, L_β, N_r

constant requirements. Of the eight remaining cases, three required adjustments to the yaw augmentation system gains in order to improve dutch roll damping characteristics. For the largest value of $L_{\delta a}$ studied, it was necessary to lower the roll augmentation gains to compensate for the increased effectiveness of the ailerons. The four remaining cases, upper and lower limit L_{β} and $L_{\delta r}$ cases, were augmented by the simultaneous solution of aerodynamic coefficient method. In both cases additional feedbacks were added to the lateral-directional baseline augmentation system. A summary of the revised lateral-directional gains is given in Table XVII.

LONGITUDINAL

The data presented in this section are those for the control and augmentation system defined in Figure 3.

The sensitivities and gain margins for the longitudinal coefficient variations are presented in Table XX. Cases where the coefficient gain margins referenced to Level 1 requirements are so large that they were not violated over the variation ranges are indicated as LDM.

These data show that the augmentation system is most sensitive to coefficient changes which significantly affect the phugoid damping. The second greatest control system sensitivity results from coefficient variations affecting short period frequency.

In general, baseline augmentation proved to be very successful in augmenting the aircraft with variations in the longitudinal coefficients. In several cases where unstable phugoid roots were present for the basic aircraft, baseline augmentation was unable to provide satisfactory longitudinal response characteristics. However, with the addition of an attitude-hold loop to the pitch augmentation system, these cases were satisfactorily augmented. For a small value of $M_{\delta e}$, results indicate that it may become necessary to add augmentation to the horizontal stabilizers due to the decreased pitching moment capability of the elevators. A summary of the longitudinal parameter variation gains is given in Table XXI.

The change in coefficient sensitivities resulting from the addition of baseline augmentation is shown in Figures 79 through 81. In general these data show that baseline augmentation significantly reduces velocity and rotational moment and force coefficient sensitivities over those for the unaugmented vehicle and increases moment and normal force elevator effectiveness coefficient sensitivities.

The effect of baseline augmentation on coefficient sensitivities for the phugoid damping is summarized in Figure 79. Significant reductions in sensitivities for Z_V, Z_α, M_q and M_V are achieved. The sensitivities for X_α, and $M_{\delta e}$ are increased. The most important coefficients in influencing ζ_p are X_V, X_α and $M_{\dot{\alpha}}$.

TABLE XX. BASELINE AUGMENTED LONGITUDINAL SENSITIVITIES AND DESIGN MARGINS

Coefficient	ζ_{sp}		ζ_p		$\omega_{n_{sp}}$		ω_{n_p}		Multiple for which MHQ not met.	Limiting H.Q. Requirement	Aug. Gains Affected	Aug. Loops Affected	Figure in which final Aug. is defined	Coef. Limit for B.L. Augmentation			
														Lower Multiple	Limit Value	Upper Multiple	Limit Value
	SENS.	% DMC (LEVEL 1)	SENS.	% DMC (LEVEL 1)	SENS.	% DMC (LEVEL 1)	SENS.	% DMC (LEVEL 1)									
K_q	0.[illegible]	LIM	0.540	-105.	0.0	LIM	-0.[illegible]	LIM	-5X	ζ_p	K_q, K_{n_z}, K_α	YES	47	>10X*	<-0.33	-1.05	0.0347
K_{n_z}	0.0000[illegible]e-4	LIM	0.735	-146.	-0.000005	LIM	0.7768	LIM	-5X	ζ_p	$K_q, K_{n_z}, K_\alpha, K_\theta$	YES	49	-1.4X	-83.5	>10X*	>58.9
$K_{\alpha_{sp}}$	0.0	LIM	0.0	LIM	0.0	LIM	0.0	LIM	NONE	NONE	NONE	NO	3	>5X*	<-9.15	< 0*	> 0
K_{α_p}	0.0	LIM	0.00274	LIM	-0.00076	LIM	0.0454	LIM	NONE	NONE	NONE	NO	3	-100X*	<-0.22	< 0*	> 0
$K_{\theta_{sp}}$	-0.0	LIM	0.0457	LIM	-0.005	LIM	-0.118	LIM	NONE	NONE	NONE	NO	3	>5X*	<-2.38	< 0*	> 0
K_{θ_p}	0.0	LIM	0.0	LIM	0.0	LIM	0.0	LIM	NONE	NONE	NONE	NO	3	>5X*	<-0.44	< 0*	> 0
K_c	-0.0475	LIM	0.00091	LIM	-0.0015	LIM	0.000768	LIM	NONE	NONE	NONE	NO	3	>5X*	<-0.41	< 0*	> 0
M_q	0.0	LIM	-0.0721	-500	0.00013	LIM	0.225	-540.	-10X	Unstable Real Root	K_q, K_{n_z}, K_α	YES	58	<-5X*	< 0.00053	>10X*	>0.0065
M_α	0.0000485	LIM	0.0112	-950	-0.00005	LIM	0.0768	DNA	-10X,200X	ζ_p	$K_q, K_{n_z}, K_\alpha, K_c$	YES	58, 60	>5X*	-1.56	-2.2X	0.686
$M_{\dot\alpha}$	-0.00821	LIM	0.505	-220	0.0034	LIM	0.0115	LIM	-5X	ζ_p	K_q, K_{n_z}	YES	62	>100,<200*	-4.<Va>-7.	-9.5X	0.173
M_{n_z}	-0.0506	LIM	0.206	LIM	0.126	LIM	-0.166	LIM	NONE	NONE	NONE	NO	-	>10X*	<-6.36	< 0*	0
$M_{\theta_{sp}}$	0.0	LIM	0.0	LIM	0.0	LIM	-0.0	LIM	NONE	NONE	NONE	YES	56	>5X*	<-6.04	< 0*	> 0
M_c	-0.232	LIM	0.226	LIM	0.505	-80.0	-0.50	LIM	0.0X	$\omega_{n_{sp}}$	NONE	NO	72	>5X*	>-6.575	0.2*	-0.263

DNA Data not available indicates further investigation was not conducted and these data are not available because of baseline augmentation inability to meet minimum handling quality requirements.

LIM These coefficient design margins are outside the parameter ranges investigated.

* Lower limit undefined.

TABLE XXI

SUMMARY OF LONGITUDINAL AUGMENTATION GAINS

Coefficient	K_q	K_{n_z}	K_α	K_Θ	K_q'	K_{n_z}'
Units	Inch-Sec.	$\frac{\text{Rad-In.}}{g}$	Inches	Inches	Inc-Sec.	$\frac{\text{Rad-In.}}{g}$
Baseline:	38.0	4.0	NA	NA	NA	NA
-5 X_V	15.0	0.0	10.0	12.6	NA	NA
10 X_V	Same as baseline case					
-5 X_α	40.0	0.0	NA	3.0	NA	NA
5 X_α	Same as baseline case					
Zero $X_{\delta H}$	Same as baseline case					
5 $X_{\delta H}$	Same as baseline case					
Zero Z_V	Same as baseline case					
100 Z_V	Same as baseline case					
Zero Z_α	Same as baseline case					
5 Z_α	Same as baseline case					
Zero $Z_{\delta e}$	Same as baseline case					
5 $Z_{\delta e}$	Same as baseline case					
Zero $Z_{\delta H}$	Same as baseline case					
5 $Z_{\delta H}$	Same as baseline case					
-10 M_V	150.0	0.0	50.0	NA	NA	NA
10 M_V	Same as baseline case					
-5 $M_{\dot{\alpha}}$	100.0	0.0	NA	NA	NA	NA
5 $M_{\dot{\alpha}}$	Same as baseline case					
-10 M_α	40.0	0.0	4.0	NA	NA	NA
200 M_α	0.0	0.0	NA	5.0	NA	NA
Zero M_q	Same as baseline case					
10 M_q	Same as baseline case				NA	NA
Zero $M_{\delta e}$	0.0	0.0	NA	NA	51.78	5.45
5 $M_{\delta e}$	Same as baseline case				NA	NA
Zero $M_{\delta H}$	Same as baseline case				NA	NA
5 $M_{\delta H}$	Same as baseline case				NA	NA

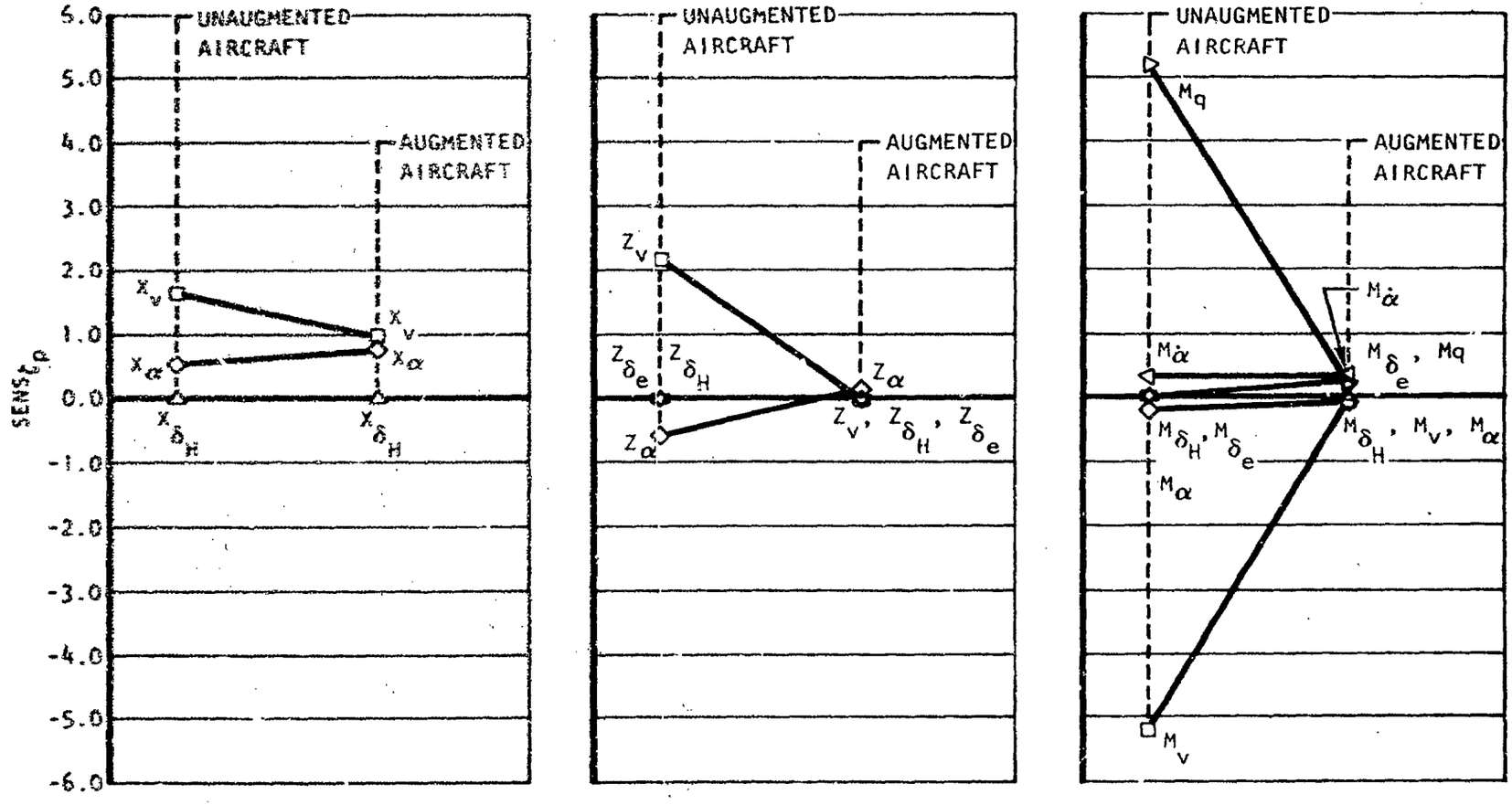

Figure 79. Baseline Pitch Augmentation Effects on Coefficient Sensitivities for Phugoid Damping.

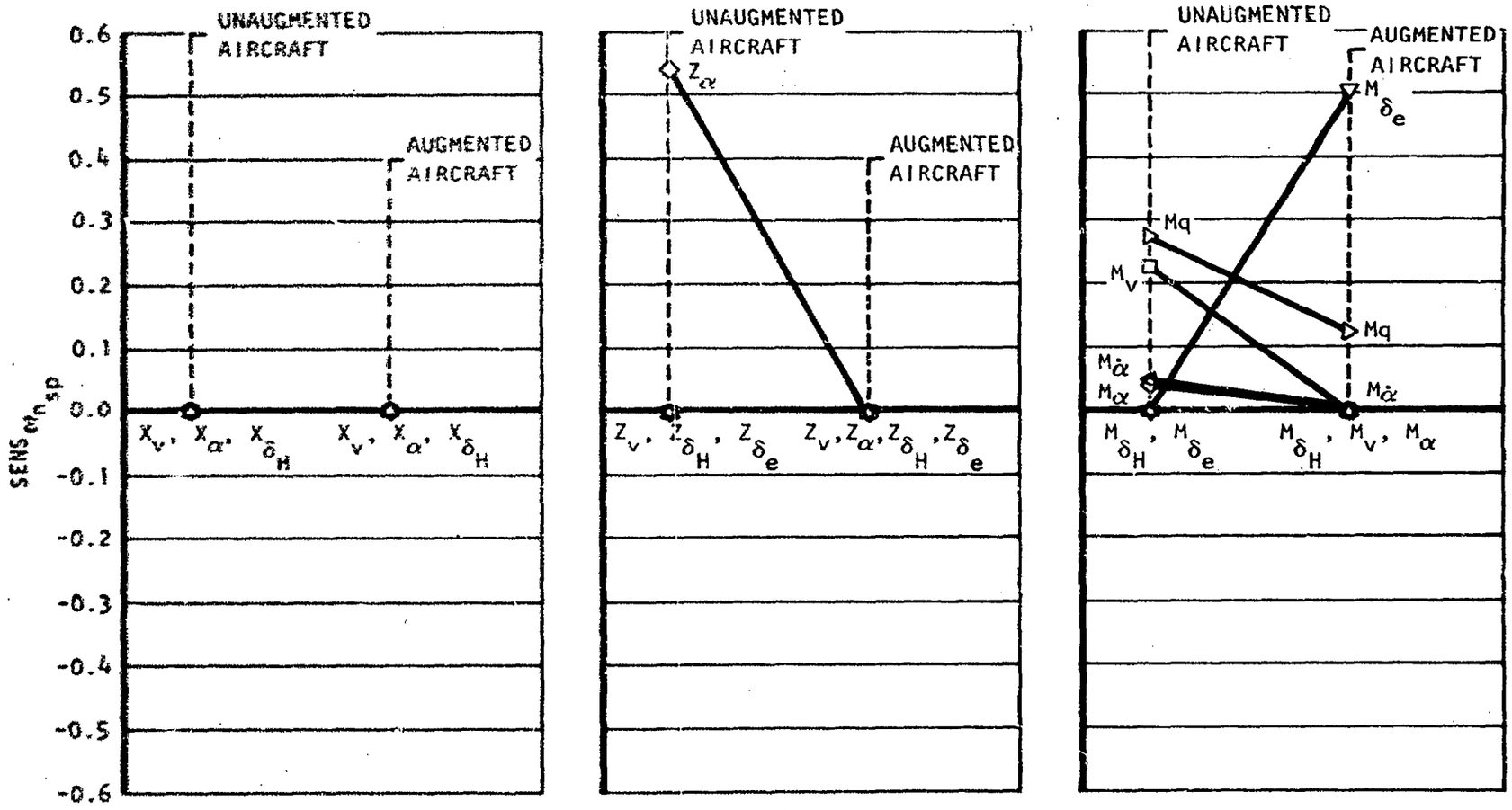

Figure 80. Baseline Pitch Augmentation Effects on Coefficient Sensitivities for Short Period Frequencies.

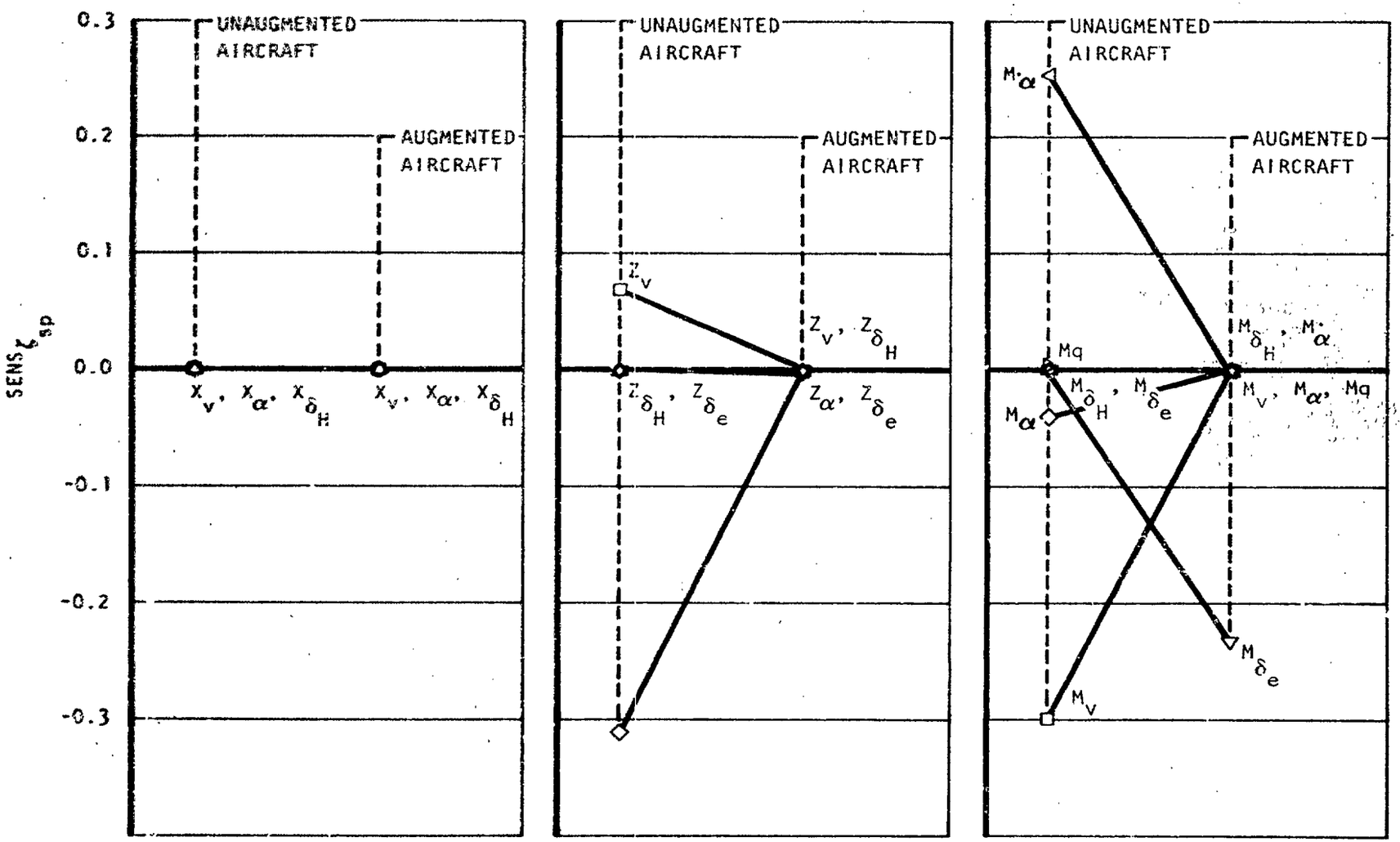

Figure 81. Baseline Pitch Augmentation Effects on Coefficient Sensitivities for Short Period Damping.

Similar results are observed for the short period frequency as shown in Figure 80. For this flying qualities parameter the addition of baseline augmentation reduces all moment and force coefficient sensitivities to ± 0.01 except for M_q and $M_{\delta e}$. The sensitivity for M_q is decreased 50 percent to 0.13 and that for $M_{\delta e}$ is increased to 0.5. This effective increase in the sensitivity of $M_{\delta e}$ makes this the most significant coefficient in influencing short period frequency. M_q is next in importance in influencing $\omega_{n_{sp}}$.

In terms of coefficient sensitivities affecting short period damping, Figure 81, the baseline augmentation system reduces all axial and normal force and moment coefficient sensitivities by factors in excess of $\frac{1}{100}$ of their unaugmented values except for $M_{\delta e}$. Particularly significant decreases in sensitivities occur for Z_V, Z_α, M_V, M_α, and $M_{\dot{\alpha}}$. For short period damping the addition of baseline augmentation reduces all moment and force coefficient sensitivities to less than ± 0.01 except for $M_{\delta e}$ which is increased to -0.23. The minus sign associated with the sensitivity for $M_{\delta e}$ indicates that a prediction error in this coefficient which results in an increase in the baseline value of $M_{\delta e}$ would reduce the augmented ζ_{sp} and conversely a coefficient prediction error resulting in a reduction in the baseline value of $M_{\delta e}$ would increase the augmented ζ_{sp}. The most important coefficient in influencing short period damping is $M_{\delta e}$.

~~(The reverse of this page is blank)~~

Section IV

SUMMARY AND RECOMMENDATIONS

BASELINE VEHICLE CHARACTERISTICS

In the lateral-directional axes the unaugmented baseline vehicle exhibits marginally stable dutch roll damping, low frequency, excellent roll response in terms of time constant and control effectiveness, slightly unstable spiral mode roots, low rudder effectiveness and slightly high sideslip excursion characteristics. The unaugmented baseline vehicle was shown to either meet or exceed the minimum flying qualities requirement specified for augmentation failure mode operation in all cases except yaw control effectiveness and $\left|\frac{\Delta\beta_{MAX}}{\phi_1}\right| \times \left|\frac{\phi}{\beta}\right|_d$.

The baseline augmentation for this vehicle was designed around these unaugmented characteristics to either meet or exceed Level 1 requirements. This objective was achieved in all cases except that for rudder control effectiveness.

In terms of the Level 1 requirement of Reference (1) the rudder effectiveness is approximately 30 percent low. As a result of analysis conducted for this study it has been shown that a control system, either unaugmented and/or augmented, can be designed to include control blending techniques to increase rudder effectiveness. However, the increase in rudder effectiveness which can be gained in this manner is considerably short of the 30 percent required. While the scope of this analysis was not sufficiently broad to define the actual increment which can be achieved, it is estimated that any increased rudder effectiveness achieved in this manner would be on the order of 10 percent over that designed into the baseline vehicle.

The unaugmented longitudinal axis of the baseline vehicle exhibits real short period roots and almost neutral phugoid damping. Because of an IFR requirement in the terminal flight phase, the unaugmented longitudinal short period handling qualities of this vehicle were referenced to Level 2 IFR. In the case of the short period frequency this requirement is not met for the baseline configuration, as a result, a fail operational longitudinal augmentation system would be a requirement. The baseline augmentation system was designed to increase short period frequency and reduce damping. With respect to the phugoid roots, augmentation reduces frequency and increases damping. In all flying qualities areas investigated baseline augmentation meets or exceeds all Level 1 requirements.

In terms of augmentation systems, these study results have shown that in order to meet terminal flight phase requirements of Reference (1) the pitch and yaw augmentation systems must be fail operational. This

requirement would assure adequate aircraft flying qualities with respect to the sideslip excursion requirements and those for short period frequency. The study has also shown that the required increase in rudder effectiveness cannot be achieved solely by control blending and that additional rudder effectiveness must be designed into the baseline configuration.

COEFFICIENT PREDICTION ACCURACY GUIDELINE

A guideline was established to assess coefficient prediction accuracy requirements for any specific baseline aircraft. This guideline requires apriori knowledge of handling qualities parameter values for the vehicle being analyzed, as well as, knowledge of the sensitivity of the handling qualities parameter to a given coefficient as defined in this report. This coefficient prediction accuracy (PA) guideline appears most useful in refining a given baseline configuration. It is expressed in terms of parameter sensitivity, SENS, and the non-dimensionalized deviation of the handling qualities parameter from the minimum allowed, or minimum desired, value of the parameter. In equation form prediction accuracy is:

$$RPA = \frac{1}{SENS_\eta}\left[\frac{P_{BL} - P_{MHQ}}{P_{BL}}\right] = \frac{\Delta P}{SENS_\eta}$$

Assuming the accuracy of predicting a given force or moment coefficient is known, then the above equation can be turned around to solve for the maximum allowed deviation of the particular flying qualities parameter from the specification or desired value of the parameter, ΔP. This value then becomes the design objective or guideline, and as such, incorporates a correction to the minimum flying qualities requirement which account for realistic and achievable coefficient prediction accuracies based on the method in which these coefficients are derived.

Most studies previously conducted to determine accuracy requirement guidelines consider only the sensitivities of flying qualities parameters to certain coefficients. The guideline presented in this study also considers the baseline vehicle flying qualities in relation to a desired performance level. The performance levels designed to can be those specified by the applicable military specification or some other flying qualities design limit to which the designer is working.

The above type of guideline is a linearized nonlinear function and as a result, gives only approximate results. The inaccuracies of this type of approach can be minimized by measuring the sensitivities over the accuracy range of interest. In this study all sensitivities discussed are measured over a ±50 percent band. For most coefficients this results in very small errors when accuracy requirements within this band are being investigated. The data contained in this report permit other measurements for sensitivities over a range of several hundred percent in most cases.

PREDICTION ACCURACY REQUIREMENTS

For the unaugmented vehicle there are ten lateral-directional coefficients with relative sensitivities greater than 0.25; these require consideration of prediction accuracy. These are L_β, L_p, L_r, $L_{\delta a}$, $L_{\delta r}$, N_β, N_p, N_r, $N_{\delta r}$, and Y_β. In the longitudinal mode there are six, M_V, M_q, $M_{\dot{\alpha}}$, Z_V, Z_α and X_V. The importance of the accuracy requirement for each of these coefficients varies with the flying qualities parameter being assessed.

In the lateral-directional axes the most stringent coefficient accuracy requirements for the NR MST are imposed by the τ_s, ψ_t, t_{30} and $\left|\frac{\Delta\beta}{\phi_1}\right| \times \left|\frac{\phi}{\beta}\right|_d$ requirements. The accuracy requirements for the coefficients affecting τ_s and t_{30} were defined, the minimum flying qualities for the unaugmented vehicle were not met for ψ_t and $\left|\frac{\Delta\beta}{\phi_1}\right| \times \left|\frac{\phi}{\beta}\right|$ and as a result these accuracy requirements could not be established. For the baseline unaugmented vehicle no lateral-directional prediction accuracy requirements less than 20 percent are indicated for those coefficients whose accuracy requirements were established. In the longitudinal mode all coefficient accuracy requirements for the baseline unaugmented vehicle were in excess of 100 percent except for coefficients influencing ω_{nsp}. The accuracy requirements for this parameter were not determined since the appropriate performance level was not achieved.

The addition of baseline augmentation in both the lateral-directional and longitudinal axes reduces the prediction accuracy requirements of most coefficients with respect to their unaugmented values except the control effectiveness terms $M_{\delta e}$, $L_{\delta a}$ and $N_{\delta r}$, and the cross coupling terms $L_{\delta r}$, $N_{\delta a}$, $Y_{\delta r}$. The sensitivities, and as a result, the prediction accuracy requirements of these coefficients are generally increased by augmentation. While the addition of baseline augmentation effectively reduces the prediction accuracy requirements of most coefficients, it does necessitate consideration of a greater number of coefficients in terms of prediction accuracy requirements. The coefficients with relative sensitivities larger than 0.25 for the augmented lateral-directional axis are L_p, L_r, L_β, $L_{\delta a}$, $L_{\delta r}$, N_p, N_r, N_β, $N_{\delta a}$, $N_{\delta r}$, Y_β and $Y_{\delta r}$. For the augmented longitudinal mode these are M_V, M_q, $M_{\dot{\alpha}}$, $M_{\delta e}$, Z_α, X_V and X_α.

In addition to decreasing the prediction accuracy requirements of most rotary and velocity related coefficients, augmentation also results in a corresponding increase in the performance level which can be achieved. As a result, the augmented coefficient design margin, DMC, no longer represents an accuracy requirement, more significantly it represents a gain level or margin in the case of coefficients which are inside a closed aerodynamic loop. In the case of control effectiveness coefficients these are open loop and the DMC associated with these terms for the augmented configuration do represent coefficient prediction accuracy requirements.

FLIGHT CONTROL SYSTEM SENSITIVITY

These study results indicate that the augmented flight control system designs are generally insensitive to variations in aerodynamic coefficients which are independent of force or control moment generation. In both the lateral-directional and longitudinal axes large coefficient excursions were required in all cases before major control system configuration revisions were needed. The inherent function of the baseline augmentation system design is the reduction of linear and angular velocity force and moment aerodynamic coefficient sensitivities (uncontrolled variables) to values less than those for the control effectiveness sensitivities (controlled variables) thus providing a method of adjusting a large variety of handling qualities parameters to a desired performance level.

For the baseline augmentation systems the greatest sensitivity encountered was in relation to coefficient variations affecting the spiral mode time constant in the lateral-directional axes and those affecting phugoid damping in the longitudinal axis.

For all coefficient variations the flight control system sensitivity proved to be a function of both coefficient variation sensitivity and augmentation gain margin. The coefficients with the largest relative sensitivities were not necessarily those which required augmentation gain changes. In some cases gain changes were required for coefficient variations with lesser sensitivities simply because the baseline gain margins were smaller.

In the lateral-directional axes, these were L_r, L_β, $L_{\delta a}$, N_r and $N_{\delta r}$. Variations in these coefficients from 5 to 50 percent resulted in the need for augmentation gain redefinition. All other coefficient variations were in excess of ± 50 percent before a gain change was required. Very large excursions for several coefficients resulted in the need for revision of augmentation loops as well as gain changes. In the lateral-directional axes these included 5 L_p, $-3L_\beta$, 1/5 $L_{\delta a}$, 5 $L_{\delta r}$, 1/5 $N_{\delta r}$ and $N_{\delta rBL}$. The 5 L_p and 1/5 $L_{\delta a}$ cases required revision of the augmentation loops to meet the t_{30} requirement. The -3 L_β case required addition of a beta feedback into roll to satisfy the ϕ_{osc}/ϕ_{av} requirement. The 5 $L_{\delta r}$ resulted in the necessity of destabilizing the spiral mode. The 1/5 $N_{\delta r}$ and baseline $N_{\delta r}$ cases require improvement (aircraft redesign) to meet the requirement for ψ_t. In all other cases either baseline augmentation or minor changes in gains associated with baseline augmentation provided satisfactory response characteristics.

In the longitudinal axis the greatest FCS sensitivity resulted from variations in X_V, X_α and $M_{\delta e}$. The FCS sensitivity to variations in all other coefficients was in excess of ± 100 percent. For very large coefficient excursions in several cases augmentation loop revision as well as gain changes were necessary. These included -5 X_V, -5 X_α, and 200 M_α. For each of these cases the need for revision resulted from phugoid mode damping requirement.

RECOMMENDATIONS

As a result of this study, several areas for further investigation are suggested for STOL flying qualities definition or improvement.

1. Study results have shown that highly damped spiral mode roots are undesirable in that they result in bank angle bleed-off after a wheel command. It is suggested that appropriate analyses be conducted to establish a maximum stability limit on this flying qualities parameter. In determining this limit, the ϕ_{osc}/ϕ_{av} limits should be considered since the data analysis of this study indicates that a correlation exists.

2. The prediction accuracy guideline defined in this study should be incorporated into existing aerodynamic coefficient prediction computer programs. Utilizing this guideline during the initial design phases will tend to minimize under or over design and thus facilitate configuration definition.

3. Validate the sensitivities of this report by calculations based on another baseline aircraft. If significant differences exist identify the performance and/or configuration changes which result in these differences and develop coefficient sensitivity spectra.

4. Develop a generalized method of augmenting STOL aircraft to further reduce flight control system sensitivity to variations in aerodynamic coefficients affecting spiral mode time constant and the phugoid mode damping ratio. One solution for desensitizing these areas would be the development of appropriate gain schedules which permit a known coefficient tolerance band throughout the operational flight regime. Another perhaps more effective way would be to attack the problem of desensitizing the critical coefficients by defining augmentation loops and/or gains for achieving this purpose. A study needs to be conducted which will examine both these approaches to determine which yields the best results. Some work along these lines has been conducted in this study. Appendix I contains an equation which would prove useful in defining a gain schedule for the spiral mode damper.

5. Approximate equations for applicable flying qualities parameters should be defined in terms of aerodynamic coefficients. These equations should be based on STOL characteristics and provide reasonable accuracy. In a number of cases during this study the approximate equations of Reference (5) were compared with 3 or 6 DOF matrix solutions. In general, these comparisons resulted in such poor correlation that no significant conclusions could be drawn.

6. Evaluate appropriate STOL coefficient prediction techniques against wind tunnel and/or flight test data to define realistic and achievable prediction accuracies possible for given coefficients.

APPENDIX I

NUMERICAL EXAMPLE FOR STABILIZING SPIRAL MODE TIME CONSTANT

Using the method outlined in Section II of this report, an equation solving for K_{rh}, the yaw rate feedback gain in the roll augmentation system, can be derived which makes $1/\tau_s$ equal to zero.

$$K_{rh} = (K_{pa})\ (\sin\theta) + \frac{(N1)(N2)-(N3)(N4)-N5}{95.6\ (D1+D2)} \qquad \text{(AI-1)}$$

The variables used in the above equation are defined below.

$$N1 = L_p\ (\sin\theta) - L_r \qquad \text{(AI-2)}$$

$$N2 = -N_\beta + K_{n_y}\left(\frac{V}{g}\right)\left[(N_\beta)\ (Y_{\delta r}) - (N_{\delta r})\ (Y_\beta)\right] \qquad \text{(AI-3)}$$

$$N3 = N_p\ (\sin\theta) - N_r \qquad \text{(AI-4)}$$

$$N4 = L_\beta + K_{n_y}\left(\frac{V}{g}\right)\left[(L_\beta)\ (Y_{\delta r}) - (L_{\delta r})\ (Y_\beta)\right] \qquad \text{(AI-5)}$$

$$N5 = K_{n_y}\left(\frac{V}{g}\right)(Y_r)\left[(L_\beta)\ (N_{\delta r}) - (L_{\delta r})\ (N_\beta)\right] \qquad \text{(AI-6)}$$

$$D1 = (N_\beta)\ (L_{\delta a}) - (N_{\delta a})\ (L_\beta) \qquad \text{(AI-7)}$$

$$D2 = K_{n_y}\left(\frac{V}{g}\right)\left[(L_\beta)\ (N_{\delta a})\ (Y_{\delta r}) - (N_\beta)\ (Y_{\delta r})\ (L_{\delta a}) + (Y_\beta)\ (L_{\delta a})\ (N_{\delta r}) - (Y_\beta)\ (N_{\delta a})\ (L_{\delta r})\right] \qquad \text{(AI-8)}$$

As a numerical example of equation (AI-1), the values of the baseline flight condition can be substituted into equations (AI-2) through (AI-8). Using the baseline values for K_{pa} and K_{n_y} augmentation gains, initial trim velocity for V and the trim pitch attitude angle for θ, a value of K_{rh} is computed to be 1.05. This value compares favorably with the baseline value of 0.8 as determined by root locus techniques. With the present baseline value of K_{rh} of 0.8, $1/\tau_s$ is measured to be 0.0298 which meets Level 1 requirements. If K_{rh} is increased to 1.05 it is expected that $1/\tau_s$ would be very close to zero.

APPENDIX II

EXAMPLE OF SIMULTANEOUS SOLUTION

OF AERODYNAMIC COEFFICIENT METHOD

In utilizing the simultaneous solution of aerodynamic coefficient method for determining necessary augmentation feedbacks and gains, consider the 3 DOF rolling moment and yawing moment equations. The method demonstrated here is simplified in that the side force equation is not included in the analysis. Deleting this equation gives approximate results which in many cases proved sufficient.

$$\dot{p} = (L_\beta)\,\beta + (L_p)\,p + (L_r)\,r \quad (L_{\delta a})\,\delta_a + (L_{\delta r})\,\delta_r \qquad \text{(AII-1)}$$

$$\dot{r} = (N_\beta)\,\beta + (N_p)\,p + (N_r)\,r + (N_{\delta a})\,\delta_a + (N_{\delta r})\,\delta_r \qquad \text{(AII-2)}$$

This approach assumes that only variations in either rolling moment or yawing moment coefficients are going to be examined and that the new augmentation will not have a large effect on the side force equation. When side force coefficient variations such as Y_β, Y_r and $Y_{\delta r}$ were analyzed the side force equation was included in the analysis.

For the baseline augmentation system, simplified equations for δ_a and δ_r can be written by ignoring control system actuator lags but taking into account any low frequency shaping designed into these systems.

$$\delta_a = 95.6\left[(K_{pa})\,p + (K_{rh})\,r\right] \qquad \text{(AII-3)}$$

$$\delta_r = (K_{ny})\;n_y + \frac{S}{3S+1}\;(K_r)\,r \qquad \text{(AII-4)}$$

Now consider the case where a variation in the value of L_β is analyzed. Denoting the new value of L_β as $(L_\beta + \Delta L_\beta)$ and assuming the baseline augmentation loops with β feedbacks in both the roll and yaw augmentation, to compensate for the change in L_β, the aileron and rudder deflections can be written.

$$\delta_a' = 95.6\left[(K_{pa})\;p + (K_{rh})\;r\right] + (K_\beta)\,\beta \qquad \text{(AII-5)}$$

$$\delta_r' = (K_{ny})\,n_y + \frac{S}{3S+1}\,(K_r)\,r + (K_{\beta r})\,\beta \qquad \text{(AII-6)}$$

$$L_\beta' = L_\beta + \Delta L_\beta \qquad \text{(AII-7)}$$

Substituting equations (AII-5), (AII-6), and (AII-7) into equations (AII-1) and (AII-2), and then set these two new equations equal to equations (AII-1) and (AII-2) respectively, the following relations result.

$$(L_\beta + \Delta L_\beta)\beta + (L_p)\ p + (L_r)\ r + L_{\delta a}\left[\delta a + (K_\beta)\beta\right] + L_{\delta r}\left[\delta r + (K_{\beta r})\beta\right] =$$

$$(L_\beta)\beta + (L_p)\ p + (L_r)\ r + (L_{\delta a})\ \delta a + (L_{\delta r})\ \delta r \qquad \text{(AII-8)}$$

$$(N_\beta)\beta + (N_p)\ p + (N_r)\ r + N_{\delta a}\left[\delta a + (K_\beta)\beta\right] + N_{\delta r}\left[\delta r + (K_{\beta r})\beta\right] =$$

$$(N_\beta)\beta + (N_p)\ p + (N_r)\ r + (N_{\delta a})\ \delta a + (N_{\delta r})\ \delta r \qquad \text{(AII-9)}$$

Cancelling terms, equation (AII-8) and (AII-9) reduce to equations in terms of β alone.

$$(\Delta L_\beta)\beta + (L_{\delta a})\ (K_\beta)\beta + (L_{\delta r})\ (K_{\beta r})\beta = 0 \qquad \text{(AII-10)}$$

$$(N_{\delta a})\ (K_\beta)\beta + (N_{\delta r})\ (K_{\beta r})\beta = 0 \qquad \text{(AII-11)}$$

From these equations, values for both K_β and $K_{\beta r}$ can be defined. This method was used in augmenting both the L_β variation cases, as well as numerous other coefficient variations in the lateral-directional axes. Once an augmentation system with satisfactory handling qualities has been defined for the baseline configuration, this method produces augmentation gain values comparable to those obtained by root loci analysis.

APPENDIX III

TRANSFER FUNCTIONS FOR PARAMETER VARIATION ANALYSIS

The following are the unaugmented and augmented transfer functions for the longitudinal and lateral-directional modes as computed from the two 3 DOF matrices. For the longitudinal mode, θ/X_c transfer functions were computed for the basic aircraft, the baseline augmented aircraft, and parameter variations where augmentation redefinition was required. For the lateral-directional mode, ϕ/X_w transfer functions were computed for the basic aircraft, the baseline augmented aircraft, and parameter variations where augmentation redefinition was required.

These data were utilized in the study for determining frequency, damping, time constants, augmentation loop gains and shaping requirements for both the longitudinal and lateral-directional axes. These results are discussed in Section III.

The 3 DOF unaugmented lateral-directional transfer functions start on page 140. Those for the augmented aircraft with baseline augmentation start on page 145. The revised lateral-directional augmentation polynomials start on page 149.

Transfer functions for the unaugmented 3 DOF longitudinal axis start on page 152. Those for baseline augmentation are on page 159 and the data for revised augmentation appears on page 163.

3 DOF UNAUGMENTED AIRCRAFT LATERAL-DIRECTIONAL TRANSFER FUNCTIONS FOR COEFFICIENT VARIATION ANALYSIS

BASELINE CASE:

$$\phi/\chi_\omega = \frac{3.21(S+0.180\pm j0.5618)}{(S-0.1356)\ (S+0.8581)\ (S+0.0774\pm j0.677)\ (S+10)\ (S+20)}$$

5 x Lp:

$$\phi/\chi_\omega = \frac{3.21(S+0.1864\pm j0.5608)}{(S-0.08325)(S+3.289)\ (S+0.1887\pm j0.6156)\ (S+10)(S+20)}$$

1/5 x Lp:

$$\phi/\chi_\omega = \frac{3.21(S+0.1787\pm j0.5619)}{(S-0.198)\ (S+0.5426)\ (S-0.004257\pm j0.6266)\ (S+10)(S+20)}$$

ZERØ Lp:

$$\phi/\chi_\omega = \frac{3.21(S+0.1784\pm j0.5620)}{(S-0.232)\ (S+0.4735)\ (S-0.0204\pm j0.5974)\ (S+10)\ (S+20)}$$

5x Lr:

$$\phi/\chi_\omega = \frac{3.21(S+0.2190\pm j0.5546)}{(S-0.6284)(S+0.9525)\ (S+0.04521\pm j0.8326)(S+10)\ (S+20)}$$

1/5x Lr:

$$\phi/\chi_\omega = \frac{3.21(S+0.1722\pm j0.5629)}{(S+0.0572)\ (S+0.8126)\ (S+0.04996\pm j0.6255)\ (S+10)(S+20)}$$

ZERØ Lr:

$$\phi/\chi_\omega = \frac{3.21(S+0.1702\pm j0.5631)}{(S+0.1208)\ (S+0.7967)\ (S+0.03772\pm j0.614)\ (S+10)\ (S+20)}$$

5χ Np:

$$\phi/\chi_\omega = \frac{3.21(S+0.2138\pm j0.557)}{(S-0.2276)\ (S+0.8013)\ (S+0.1114\pm j0.4529)\ (S+10)\ (S+20)}$$

1/5χNp:

$$\phi/\chi_\omega = \frac{3.21(S+0.1732\pm j0.5267)}{(S-0.1274)\ (S+0.8667)\ (S+0.0771\pm j0.7143)\ (S+10)\ (S+20)}$$

ZERO Np:

$$\phi/\chi_\omega = \frac{3.21(S+0.1716\pm j0.5629)}{(S-0.1256)\ (S+0.8686)\ (S+0.0772\pm j0.7232)\ (S+10)(S+20)}$$

-5χNp:

$$\phi/\chi_\omega = \frac{3.21(S+0.1293\pm j0.5669)}{(S-0.09857)\ (S+0.910)\ (S+0.09347\pm j0.9141)\ (S+10)\ (S+20)}$$

5χNr:

$$\phi/\chi_\omega = \frac{3.21(S+0.6270\pm j0.2038)}{(S+0.8337\pm j0.1116)(S+0.0842\pm j0.4313)\ (S+10)\ (S+20)}$$

1/5χNr:

$$\phi/\chi_\omega = \frac{3.21(S+0.0906\pm j0.5678}{(S-0.2248)\ (S+0.8597)(S+0.02535\pm j0.6903)\ (S+10)\ (S+20)}$$

ZERO Nr:

$$\phi/\chi_\omega = \frac{3.21(S+0.06826\pm j0.5671)}{(S-0.2478)\ (S+0.860)\ (S+0.01270\pm j0.69095)\ (S+10)\ (S+20)}$$

5χ Nθ:

$$\phi/\chi_\omega = \frac{3.21(S+0.180\pm j1.2445)}{(S-0.3143)\ (S+0.8409)\ (S+0.1753\pm j1.330)\ (S+10)\ (S+20)}$$

1/5χNθ:

$$\phi/\chi_\omega = \frac{3.21(S+0.180\pm j0.2625)}{(S+0.1545)\ (S+0.870)\ (S-0.07357\pm j0.4683)\ (S+10)\ (S+20)}$$

$5\chi\ L\beta$:

$$\phi/\chi_\omega = \frac{3.21(S+0.180\pm j0.610)}{(S+0.155)\ (S+1.179)\ (S-0.228\pm j0.880)\ (S+10)\ (S+20)}$$

$1/5\chi L\beta$:

$$\phi/\chi_\omega = \frac{3.21(S+0.180\pm j0.5516)}{(S-0.2556)\ (S+0.771)\ (S+0.181\pm j0.6709)\ (S+10)(S+20)}$$

$-3\chi L\beta$:

$$\phi/\chi_\omega = \frac{3.21(S+0.180\pm j0.5089)}{(S-0.5912)\ (S+0.4792)\ (S+0.4947\pm j0.8182)\ (S+10)\ (S+20)}$$

$5\chi\ L_{\delta a}$:

$$\phi/\chi_\omega = \frac{15.91(S+0.1719\pm j0.555)}{(S-0.1356)\ (S+0.8581)\ (S+0.0774\pm j0.6774)\ (S+10)\ (S+20)}$$

$1/5\chi L_{\delta a}$:

$$\phi/\chi_\omega = \frac{0.668(S+0.2184\pm j\ 0.5911)}{(S-0.1356)\ (S+0.8581)\ (S+0.0774\pm j0.6774)\ (S+10)\ (S+20)}$$

ZERO $L_{\delta a}$:

$$\phi/\chi_\omega = \frac{0.033(S+1.148\pm j0.5173)}{(S-0.1356)\ (S+0.8581)\ (S+0.0774\pm j0.6774)\ (S+10)\ (S+20)}$$

$5\chi\ L_{\delta r}$:

$$\phi/\chi_\omega = \frac{3.21(S+0.180\pm j0.5618)}{(S-0.1356)\ (S+0.8581)\ (S+0.0774\pm j0.6774)\ (S+10)\ (S+20)}$$

$1/5\chi L_{\delta r}$:

$$\phi/\chi_\omega = \frac{3.21(S+0.180\pm j0.5618)}{(S-0.1356)\ (S+0.8581)\ (S+0.0774\pm j0.6774)\ (S10)\ (+20)}$$

$-3\chi L_{\delta r}$

$$\phi/\chi_\omega = \frac{3.21(S+0.180\pm j0.5618)}{(s-0.1356)\ (S+0.8581)\ (S+0.0774+j0.06774)\ (S+10)\ (S+20)}$$

ZERO $N\beta$:

$$\phi/\chi_\omega = \frac{3.21(S+0.180\pm j0.08525)}{(S+0.2717)\ (S+0.8744)\ (S-0.1344\pm j0.4448)\ (S+10)\ (S+20)}$$

$5\chi\ N_{\delta a}$:

$$\phi/\chi_\omega = \frac{3.34(S+0.2184\pm j0.5911)}{(S-0.1356)\ (S+0.8581)\ (S+0.0774\pm j0.6774)\ (S+10)\ (S+20)}$$

$1/5\chi\ N_{\delta a}$:

$$\phi/\chi_\omega = \frac{3.18(S+0.1719\pm j0.5551)}{(S-0.1356)\ (S+0.8581)\ (S+0.0774\pm j0.6774)\ (S+10)\ (S+20)}$$

$-3\chi N_{\delta a}$:

$$\phi/\chi_\omega = \frac{3.08(S+0.1383\pm j0.5249)}{(S-0.1356)\ (S+0.8581)\ (S+0.0774\pm j0.6774)\ (S+10)\ (S+20)}$$

$5\chi\ N_{\delta r}$:

$$\phi/\chi_\omega = \frac{3.21(S+0.180\pm j0.5618)}{(S-0.1356)\ (S+0.8581)\ (S+0.0774\pm j0.6774)\ (S+10)\ (S+20)}$$

$1/5\chi\ N_{\delta r}$:

$$\phi/\chi_\omega = \frac{3.21(S+0.180\pm j0.5618)}{(S-0.1356)\ (S+0.8581)\ (S+0.0774\pm j0.6774)\ (S+10)\ (S+20)}$$

5χ Yr:

$$\phi/\chi_\omega = \frac{3.21(S+0.180\pm j0.5327)}{(S-0.1411)\ (S+0.8619)\ (S+0.0782\pm j0.6624)\ (S+10)\ (S+20)}$$

$1/5\chi$ Yr:

$$\phi/\chi_\omega = \frac{3.21(S+0.180\pm j0.5674)}{(S-0.1346)\ (S+0.8573)\ (S+0.07725\pm j0.6804)\ (S+10)\ (S+20)}$$

ZERO Yr:

$$\phi/\chi_\omega = \frac{3.21(S+0.180\pm j0.5688)}{(S-0.1343)\ (S+0.8572)\ (S+0.07721\pm j0.681)\ (S+10)\ (S+20)}$$

$5\chi \quad Y_\beta$:

$$\phi/\chi_\omega = \frac{3.21(S+0.3738\pm j0.5570)}{(S-0.1177)\ (S+0.9196)\ (S+0.2315\pm j0.668)\ (S+10)\ (S+20)}$$

$1/5\chi \cdot Y_\beta$:

$$\phi/\chi_\omega = \frac{3.21(S+0.1412\pm j0.5546)}{(S-0.14025)\ (S+0.8490)\ (S+0.04546\pm j0.6726)\ (S+10)\ (S+20)}$$

ZERO Y_β:

$$\phi/\chi_\omega = \frac{3.21(S+0.1315\pm j0.5524)}{(S-0.1415)\ (S+0.8469)\ (S+0.03745\pm j0.6710)\ (S+10)\ (S+20)}$$

$5\chi \quad Y_{\delta r}$:

$$\phi/\chi_\omega = \frac{3.21(S+0.180\pm j0.5618)}{(S-0.1356)\ (S+0.8581)\ (S+0.0774\pm j0.6774)\ (S+10)\ (S+20)}$$

$1/5\chi Y_{\delta r}$:

$$\phi/\chi_\omega = \frac{3.21(S+0.180\pm j0.5618)}{(S-0.1356)\ (S+0.8581)\ (S+0.0774\pm j0.6774)\ (S+10)\ (S+20)}$$

3 DOF AUGMENTED AIRCRAFT LATERAL-DIRECTIONAL TRANSFER FUNCTIONS (BASELINE AUGMENTATION)

BASELINE CASE:

$$\phi/\chi_\omega = \frac{3.21(S+1.8507)(S+3.9920)(S+0.3870\pm j0.3187)}{(S-0.0298)(S+1.523\pm j0.3159)(S+4.267)(S+8.997)(S+0.4263\pm j0.4758)(S+20)}$$

$5\chi Lp$:

$$\phi/\chi_\omega = \frac{3.21(S+1.878)(S+3.980)(S+0.3857\pm j0.3165)}{(S-0.0489)(S+3.151)(S+2.016)(S+0.4404\pm j0.340)(S+5.532)(S+8.309)(S+20)}$$

$1/5\chi Lp$:

$$\phi/\chi_\omega = \frac{3.21(S+1.845)(S+3.994)(S+0.3872\pm j0.3191)}{(S-0.0171)(S+1.647)(S+1.015)(S+0.3375\pm j0.5643)(S+4.208)(S+9.065)(S+20)}$$

ZERO Lp:

$$\phi/\chi_\omega = \frac{3.21(S+1.844)(S+3.995)(S+0.3873\pm j0.3192)}{(S-0.01227)(S+1.679)(S+0.9218)(S+0.2962\pm j0.580)(S+4.196)(S+9.080)(S+20)}$$

$5\chi Lr$:

$$\phi/\chi_\omega = \frac{3.21(S+2.022)(S+3.913)(S+0.3795\pm j0.3062)}{(S-0.4075)(S+1.310)(S+0.4247)(S+0.8412\pm j1.237)(S+4.612)(S+9.049)(S+20)}$$

$1/5\chi Lr$:

$$\phi/\chi_\omega = \frac{3.21(S+1.818)(S+4.006)(S+0.3886\pm j0.3214)}{(S+0.0743)(S+1.823)(S+1.606)(S+0.2913\pm j0.5194)(S+4.155)(S+8.986)(S+20)}$$

ZERO Lr:

$$\phi/\chi_\omega = \frac{3.21(S+1.809)(S+4.010)(S+0.3890\pm j0.3221)}{(S+0.0977)(S+1.978)(S+1.542)(S+0.2637\pm j0.5315)(S+4.122)(S+8.983)(S+20)}$$

$5\chi L\beta$:

$$\phi/\chi_\omega = \frac{3.21(S+1.79)\ (S+4.0)\ (S+0.411\pm j0.324)}{(S+.048)(S+2.09)\ (S+1.53)\ (S+0.12 \pm j0.96)\ (S+4.22)\ (S+9.0)\ (S+20)}$$

$5\chi L_\beta$:

$$\phi/\chi_\omega = \frac{3.21\ (S+1.86)\ (S+4.0)\ (S+0.382\pm j\ .318)}{(S-.087)\ (S+1.40\pm j0.40)\ (S+4.28)\ (S+9.0)\ (S+0.57\pm j0.13)\ (S+20)}$$

$-3\chi L_\beta$:

$$\phi/\chi_\omega = \frac{3.12\ (S+1.90)\ (S+3.98)\ (S+0.364\pm j0.313)}{(S-0.40)\ (S+1.37)\ (S+0.40)\ (S+1.36\pm j0.98)\ (S+4.31)\ (S+9.0)\ (S+20)}$$

$5\chi L_{\delta a}$:

$$\phi/\chi_\omega = \frac{15.91\ (S+1.804)\ (S+4.026)\ (S+0.3854\pm j0.3211)}{(S+0.095)\ (S+1.73)\ (S+5.24\pm j4.41)\ (S+4.2)\ (S+0.312\pm j0.430)\ (S+20)}$$

$1/5\chi L_{\delta a}$:

$$\phi/\chi_\omega = \frac{0.668\ (S+2.1)\ (S+3.8)\ (S+0.39\pm j0.31)}{(S-0.1144)\ (S+1.593)\ (S+0.7204)\ (+0.4384\pm j0.6215)\ (S+4.256)\ (S+9.803)\ (S+20)}$$

ZERO $L_{\delta a}$:

$$\phi/\chi_\omega = \frac{0.033\ (S+3.86\pm j3.0)\ (S+0.42\pm j0.22)}{(S-0.15)\ (S+1.61)\ (S+0.62)\ (S+0.40\pm j0.65)\ (S+4.25)\ (S+9.98)\ (S+20)}$$

$5\chi L_{\delta r}$:

$$\phi/\chi_\omega = \frac{3.21\ (S+2.15)\ (S+3.71)\ (S+0.381\pm j0.31)}{(S+0.038)\ (S+1.28)\ (S+0.24)\ (S+0.57\pm j1.13)\ (S+5.59)\ (S+8.86)\ (S+20)}$$

$1/5\chi L_{\delta r}$:

$$\phi/\chi_\omega = \frac{3.21\ (S+1.8)\ (S+4.0)\ (S+0.39\pm j0.32)}{(S-0.038)\ (S+2.19)\ (S+1.50)\ (S+0.358\pm j0.4845)\ (S+3.76)\ (S+9.0)\ (S+20)}$$

$-3\chi L_{\delta r}$:

$$\phi/\chi_\omega = \frac{3.21\ (S+1.61)\ (S+4.21)\ (S+0.394\pm j0.325)}{(S-0.067)\ (S+1.37)\ (S+3.15\pm j1.83)\ (S+0.21\pm j0.49)\ (S+9.1)\ (S+20)}$$

$5\chi N_p$:

$$\phi/\chi_\omega = \frac{3.21\ (S+2.0)\ (S+3.9)\ (S+0.38\pm j0.31)}{(S-0.021)\ (S+2.25)\ (S+1.1)\ (S+0.33\pm j0.48)\ (S+9.0)\ (S+20)}$$

$1/5\chi Np$:

$$\phi/\chi_\omega = \frac{3.21\ (S-1.82)(S+4.0)(S+0.39\pm j0.32)}{(S-0.031)(S+1.50\pm j0.44)(S+0.44\pm j0.47)(S+4.31)(S+9.0)\ (S+20)}$$

ZERO Np:

$$\phi/\chi_\omega = \frac{3.21\ (S+1.81)(S+4.0)(S+0.39\pm j0.32)}{(S-0.031)(S+1.49\pm j0.46)(S+0.45\pm j0.47)(S+4.32)(S+9.0)\ (S+20)}$$

$5\chi Nr$:

$$\phi/\chi_\omega = \frac{3.21\ (S+3.42\pm j1.19)(S+0.33\pm j0.23)}{(S+0.124)(S+3.41\pm j0.99)(S+1.67)(S+0.24\pm j0.41)(S+9.0)\ (S+20)}$$

$1/5\chi Nr$:

$$\phi/\chi_\omega = \frac{3.21\ (S+1.49)(S+4.13)(S+0.41\pm j0.36)}{(S-0.06)(S+1.33\pm j0.16)(S+4.38)(S+0.49\pm j0.54)(S+9.0)\ (S+20)}$$

ZERO Nr:

$$\phi/\chi_\omega = \frac{3.21\ (S+1.40)(S+4.17)(S+0.41\pm j0.37)}{(S-0.074)(S+1.36)(S+1.19)(S+0.5105\pm j0.5649)(S+4.40)(S+9.00)(S+20)}$$

$5\chi N_\beta$:

$$\phi/\chi_\omega = \frac{3.21\ (S+0.48)(S+4.12)(S+1.0\pm j1.1)}{(S-0.12)(S+1.62)(S+0.32)(S+0.98\pm j1.34)(S+4.35)(S+9.0)\ (S+20)}$$

$1/5\chi N_\beta$:

$$\phi/\chi_\omega = \frac{3.21(S+2.068)(S+3.957)(S+0.2955\pm j0.2847)}{(S-0.00018)(S+1.67\pm j0.32)(S+4.25)(S+0.27\pm j0.50)(S+9.0)\ (S+20)}$$

ZERO N_β:

$$\phi/\chi_\omega = \frac{3.21(S+2.12)(S+3.95)(S+0.27\pm j0.27)}{(S+0.008)(S+1.70\pm j0.32)(S+4.24)(S+0.24\pm j0.50)(S+9.)(S+20)}$$

$5\chi N_{\delta_a}$:

$$\phi/\chi_\omega = \frac{3.34(S+2.1)(S+3.8)(S+0.39\pm j0.31)}{(S-0.021)(S+1.56\pm j0.47)(S+4.27)(S+0.43\pm j0.46)(S+8.9)(S+20)}$$

$1/5\chi N_{\delta a}$:

$$\phi/\chi_\omega = \frac{3.18(S+1.8)(S+4.0)(S+0.38\pm j0.32)}{(S-0.032)(S+1.52\pm j0.27)(S+4.27)(S+0.43\pm j0.48)(S+9.0)\ (S+20)}$$

$-3\chi N_{\delta a}$:

$$\phi/\chi_\omega = \frac{3.08(S+1.62)(S+4.15)(S+0.378\pm j0.33)}{(S-0.039)(S+1.64)(S+1.34)(S+0.42\pm j0.50)(S+4.25)(S+9.1)(S+20)}$$

$5\chi N_{\delta r}$:

$$\phi/\chi_\omega = \frac{3.21(S+3.0\pm j5.2)(S+0.32\pm j0.27)}{(S-0.049)(S+2.96\pm j5.44)(S+1.60)(S+0.30\pm j0.42)(S+9.0)\ (S+20)}$$

$1/5\chi N_{\delta r}$:

$$\phi/\chi_\omega = \frac{3.21(S+0.46)(S+5.56)(S+0.30\pm j0.54)}{(S+0.0058)(S+1.55)(S+0.32)(S+0.25\pm j0.72)(S+5.80)(S+8.97)\ (S+20)}$$

$5\chi Y_\beta$:

$$\phi/\chi_\omega = \frac{3.21(S+0.32)(S+4.62)(S+1.03\pm j1.89)}{(S-0.058)(S+1.74)(S+0.35)(S+0.89\pm j1.92)(S+4.72)(S+9.0)\ (S+20)}$$

$1/5\chi Y_\beta$:

$$\phi/\chi_\omega = \frac{3.21(S+2.49)(S+3.74)(S+0.155\pm j0.26)}{(S-0.0013)(S+1.82\pm j0.36)(S+4.14)(S+0.14\pm j0.40)(S+9.0)(S+20)}$$

ZERO Y_β:

$$\phi/\chi_\omega = \frac{3.21(S+2.66)(S+3.64)(S+0.11\pm j0.23)}{(S+0.012)(S+1.87\pm j0.35)(S+4.10(S+0.09\pm j0.37)\ (S+9.0)\ (S+20)}$$

$5\chi Y_{\delta r}$:

$$\phi/\chi_\omega = \frac{3.21(S-0.14)(S-9.44)(S-0.057\pm j0.21)}{(S-0.058\pm j0.27)(S+1.63)(S-9.46)(S-0.23\pm j0.16)(S+9.0)\ (S+20)}$$

$1/5\chi Y_{\delta r}$:

$$\phi/\chi_\omega = \frac{3.21(S+0.63)(S+8.30)(S+0.44\pm j0.45)}{(S-0.027)(S+1.59)(S+0.67)(S+0.41\pm j0.63)(S+8.35)(S+9.0)(S+20)}$$

3 DOF AUGMENTED AIRCRAFT LATERAL-DIRECTIONAL TRANSFER FUNCTION (REVISED AUGMENTATION)

5 Lp: Kpa = -1.98, Kr = 3.5, Kny = 1.75, Krh = 0.8, Kpr = 0.0895

$$\phi/\chi_\omega = \frac{3.21(S+1.88)(S+3.98)(S+0.39\pm j0.32)}{(S-0.031)(S+1.45\pm j0.21)(S+0.42\pm j0.46)(S+4.17)(S+12.0)(S+20)}$$

5 Lr; Kpa = 0.85, Kr = 3.5, Kny = 1.75, Krh = 5.4

$$\phi/\chi_\omega = \frac{3.21(S+2.02)(S+3.91)(S+0.38\pm j0.31)}{(S-0.019)(S+3.55)(S+2.27)(S+1.63)(S+0.37\pm j0.43)(S+8.5)(S+20)}$$

1/5 Lr: Kpa = 1.60, Kr = 3.5, kny = 1.77, Krh = 0.0

$$\phi/\chi_\omega = \frac{3.21(S+1.86)(S+3.91)(S+0.39\pm j0.32)}{(S-0.03)(S+1.87\pm j0.55)(S+4.58)(S+0.45\pm j0.41)(S+8.0)(S+20)}$$

-3 Lr: Kpa = 0.85, Kr = 3.5, Kny = 1.75, Krh = -3.45

$$\phi/\chi_\omega = \frac{3.21(S+1.69)(S+4.06)(S+0.40\pm j0.33)}{(S-0.00025)(S+1.35\pm j0.25)(S+4.58)(S+0.42\pm j0.55)(S+9.5)(S+20)}$$

5 L_β: Kpa = 0.85, Kr = 3.5, Kny = 1.75, Krh =0.8, K_β = 3.384, $K_{\beta r}$ = 0.10685

$$\phi/\chi_\omega = \frac{3.21(S+1.94)(S+3.96)(S+0.36\pm j0.32)}{(S-0.028)(S+1\quad\pm j0.38)(S+4.28)(S+0.47\pm j0.46)(S+9.0)(S+20)}$$

1/5 L_β: Kpa =0.85, Kr = 3.5, Kny = 1.75, Krh = 1.2

$$\phi/\chi_\omega = \frac{3.21(S+1.87)(S+3.98)(S+0.38\pm j0.32)}{(S-0.027)(S+1.46\pm j0.36)(S+4.28)(S+0.49\pm j0.23)(S+9.0)(S+20)}$$

-3L_β: Kpa = 0.85, Kr = 3.5, Kny = 1.75, Krh = 0.8, K_β = 3.384, $K_{\beta r}$ = 0.10685

$$\phi/\chi_\omega = \frac{3.21(S+1.76)(S+4.03)(S+0.42\pm j0.32)}{(S-0.032)(S+1.58\pm j0.24)(S+4.25)(S+0.39\pm j0.49)(S+9.0)(S+20)}$$

5 $L_{\delta a}$: Kpa = 0.17, Kr = 3.5, Kny = 1.75, Krh = 0.16

$$\phi/\chi_\omega = \frac{15.9(S+1.80)(S+4.03)(S+0.39\pm j0.32)}{(S-0.032)(S+1.52\pm j0.27)(S+4.27)(S+0.43\pm j0.48)(S+9.00(S+20}$$

$1/5\ L_{\delta a}$: Kpa = 0.85, Kr = 3.5, Kny = 1.75, Krh = 3.5

$$\phi/\chi_\omega = \frac{0.67(S+2.10)(S+3.81)(S+0.39\pm j0.31)}{(S-0.019)(S+1.77)(S+0.92)(S+4.12)(S+0.32\pm j0.55)(S+9.7)(S+20)}$$

$5\ L_{\delta r}$: Kpa = 0.85, Kr = 3.5, Kny - 1.75, Krh = 0.8, $K_{\delta r}$ = -0.946

$$\phi/\chi_\omega = \frac{3.21(S+2.15)(S+3.71)(S+0.38\pm j0.31)}{(S-0.031)(S+1.54)(S+2.49\pm j1.08)(S+0.39\pm j0.45)(S+9.9)(S+20)}$$

$1/5\ L_{\delta r}$: Kpa = 0.85, Kr = 3.5, Kny = 1.75, Krh = 1.0

$$\phi/\chi_\omega = \frac{3.21(S+1.80)(S+4.04)(S+0.39\pm j0.32}{(S-0.016)(S+2.36)(S+1.48)(S+9.0)(S+0.33\pm j0.49)(S+20)}$$

$-3\ L_{\delta r}$: Kpa = 0.85, Kr = 3.5, Kny = 1.75, Krh = 0.8, $K_{\delta r}$ = 0.946

$$\phi/\chi_\omega = \frac{3.21(S+1.61)(S+4.22)(S+0.39\pm j0.33)}{(S-0.029)(S+1.21\pm j0.19)(S+6.91\pm j0.56)(S+0.46\pm j0.53)(S+20)}$$

5 Nr: Kpa = 2.0, Kr = 3.5, Kny = 1.75, Krh = 0.0

$$\phi/\chi_\omega = \frac{3.21(S+3.42\pm j1.19)(S+0.33\pm j0.23)}{(S+0.007)(S+2.64\pm j1.38)(S+4.97)(S+0.35\pm j0.29)(S+7.1)(S+20)}$$

1/5 Nr: Kpa = 0.85, Kr = 3.5, Kny = 1.75, Krh = 1.1

$$\phi/\chi_\omega = \frac{3.21(S+1.49)(S+4.14)(S+0.41\pm j0.36)}{(S-0.029)(S+1.42\pm j0.16)(S+4.32)(S+0.43\pm j0.53)(S+9.0)(S+20)}$$

$5\ N_\beta$: Kap = 0.85, Kr = 3.5, Kny = 1.75, Krh = 1.5

$$\phi/\chi_\omega = \frac{3.21(S+0.48)(S+4.12)(S+1.0\pm j1.06)}{(S+0.015)(S+1.61)(S+0.32)(S+1.03\pm j1.17)(S+4.22)(S+8.9)(S+20)}$$

$1/5\ N_\beta$: Kpa = 0.85. Kr = 3.07, Kny = 1.83, Krh = 0.6

$$\phi/\chi_\omega = \frac{3.21(S+1.72)(S+4.03)(S+0.34\pm j0.30)}{(S-0.02)(S+1.53\pm j0.27)(S+4.25)(S+0.32\pm j0.52)(S+9.0)(S+20)}$$

$-3\ N_{\delta a}$: Kpa = 0.85, Kr = 3.5, Kny = 1.75, Krh = 1.0

$$\phi/\chi_\omega = \frac{3.08(S+1.63)(S+4.15)(S+0.38\pm j0.33)}{(s-0.017)(S+1.65)(S+1.41)(S+4.24)(S+0.39\pm j0.50)(S+9.1)(S+20)}$$

5 N_{δ_r}: Kpa = 0.85, Kr = 3.5, Kny = 1.75, Krh = 1.0

$$\phi/\chi_\omega = \frac{3.21(S+2.99)(S+5.24)(S+0.32\pm j0.27)}{(S-0.028)(S+2.97\pm j5.45)(S+1.60)(S+0.29\pm j0.43)(S+9.1)(S+20)}$$

5 Y_β: Kpa = 0.85, Kr = 3.5, Kny = 1.75, Krh = 1.0

$$\phi/\chi_\omega = \frac{3.21(S+0.32)(S+4.62)(S+1.03\pm 1.88)}{(S-0.031)(S+1.73)(S+0.35)(S+0.90\pm j1.90)(S+9.0)(S+4.70)(S+9.0)(S+20)}$$

1/5 Y_β: Kpa = 0.85, Kr = 1.12, Kny = 1.89, Krh = 0.8

$$\phi/\chi_\omega = \frac{3.21(S+0.63)(S+4.96)(S+0.32\pm j0.42)}{(S-0.001)(S+1.58)(S+0.63)(S+5.0)(S+0.26\pm j0.56)(S+9.0)(S+20)}$$

5 Y_{δ_r}: Kpa = 0.85, Kr = 0.70, Kny = 0.35, Krh = 0.80

$$\phi/\chi_\omega = \frac{3.21(S+0.45)(S+5.58)(S+0.29\pm j0.54)}{S-0.018)(S+1.61)(S+0.46)(S+0.24\pm j0.64)(S+5.6)(S+9.0)(S+20)}$$

-5 Np: Kpa = 0.85, Kr = 3.5, Kny = 1.75, Krh = 1.2

$$\phi/\chi_\omega = \frac{3.21(S+1.64)(S+4.08)(S+0.40\pm j0.34)}{(S-0.0016)(S+1.52\pm j0.63)(S+0.47\pm j0.48)(S+4.4)(S+8.9)(S+20)}$$

3 DOF UNAUGMENTED AIRCRAFT LONGITUDINAL TRANSFER FUNCTIONS FOR COEFFICIENT VARIATION ANALYSIS

BASELINE:

$$\frac{\Theta}{/X_c} = \frac{38.98(S+0.06246)(S+0.47195)}{(S+0.26503)(S+1.1808)(S+0.009876\pm j0.1902)(S+10)(S+20)}$$

10 Xv:

$$\frac{\Theta}{/X_c} = \frac{38.98(S+0.4147\pm j0.0176)}{(S+0.27136)(S+1.1885)(S+0.1503\pm j0.10786)(S+10)(S+20)}$$

5 Xv:

$$\frac{\Theta}{/X_c} = \frac{38.98(S+0.1994)(S+0.4661)}{(S+0.2661)(S+1.1837)(S+0.07344\pm j0.1738)(S+10)(S+20)}$$

ZERO Xv:

$$\frac{\Theta}{/X_c} = \frac{38.98(S+0.02879)(S+0.4729)}{S+0.2649)(S+1.1802)(S-0.006114\pm j0.1908)(S+10)(S+20)}$$

-Xv :

$$\frac{\Theta}{/X_c} = \frac{38.98(S-0.00475)(S+0.4736)}{(S+0.2647)(S+1.1796)(S-0.02213\pm j0.18998)(S+10)(S+20)}$$

-5 Xv:

$$\frac{\Theta}{/X_c} = \frac{38.98(S-0.13808)(S+0.47588)}{(S+0.2643)(S+1.1775)(S-0.08642\pm j0.1723)(S+10)(S+20)}$$

5 X_α:

$$\frac{\Theta}{/X_c} = \frac{38.98(S+0.2723\pm j0.09411)}{(S+0.2675)(S+1.145)(S+0.0316\pm j0.1974)(S+10)(S+20)}$$

2 X_α:

$$\frac{\Theta}{/X_c} = \frac{38.98(S+0.09755)(S+0.4394)}{(S+0.2656)(S+1.1721)(S+0.01521\pm j0.1922)(S+10)(S+20)}$$

1/2 X_α:

$$\frac{\Theta}{/Xc} = \frac{38.98(S+0.04686)(S+0.4863)}{(S+0.2648)(S+1.185)(S+0.007233\pm j0.1892)(S+10)(S+20)}$$

ZERO X_α:

$$\frac{\Theta}{/Xc} = \frac{38.98(S+0.03221)(S+0.4996)}{(S+0.2645)(S+1.1894)(S+0.004605\pm j0.18806)(S+10)(S+20)}$$

-1/2 X_α:

$$\frac{\Theta}{/Xc} = \frac{38.98(S+0.01835)(S+0.5122)}{(S+0.2642)(S+1.194)(S+0.001992\pm j0.1869)(S+10)(S+20)}$$

-X_α:

$$\frac{\Theta}{/Xc} = \frac{38.98(S+0.005162)(S+0.5241)}{(S+0.2640)(S+1.1978)(S-0.000607\pm j0.1857)(S+10)(S+20)}$$

-2 X_α:

$$\frac{\Theta}{/Xc} = \frac{38.98(S-0.01955)(S+0.5463)}{(S+0.2635)(S+1.2061)(S-0.005763\pm j0.1833)(S+10)(S+20)}$$

-5 X_α:

$$\frac{\Theta}{/Xc} = \frac{38.98(S-0.08428)(S+0.6033)}{(S+0.2622)(S+1.230)(S-0.02091\pm j0.1750)(S+10)(S+20)}$$

5 X_{δ_H}:

$$\frac{\Theta}{/Xc} = \frac{38.99(S+0.06415)(S+0.4736)}{(S+0.2650)(S+1.1808)(S+0.009876\pm j0.1902)(S+10)(S+20)}$$

ZERO X_{δ_H}:

$$\frac{\Theta}{/Xc} = \frac{38.97(S+0.06204)(S+0.4715)}{(S+0.2650)(S+1.808)(S+0.009876\pm j0.1902)(S+10)(S+20)}$$

-5 X_{δ_H}:

$$\frac{\Theta}{/Xc} = \frac{38.95(S+0.059906)(S+0.4695)}{(S+0.2650)(S+1.808)(S+0.009876\pm j0.1902)(S+10)(S+20)}$$

100 Zv:

$$\frac{\Theta}{/Xc} = \frac{38.98(S+1.0444\pm j0.4906)}{(S+0.04724)(S+2.1778)(S+0.3597\pm j1.1002)(S+20)(S+10)}$$

10 Zv:

$$\frac{\Theta}{/Xc} = \frac{38.98(S+0.3379\pm j0.1835)}{(S+0.07831)(S+1.3093)(S+0.1062\pm j45998)(S+20)(S+10)}$$

5 Zv:

$$\frac{\Theta}{/Xc} = \frac{38.98(S+0.2144)(S+0.3828)}{(S+0.1156)(S+1.2424)(S+0.08366\pm j0.3281)(S+20)(S+10)}$$

ZERO Zv:

$$\frac{\Theta}{/Xc} = \frac{38.98(S+0.03366)(S+0.48505)}{(S+0.31896)(S+1.1637)(S-0.0160\pm j0.1640)(S+20)(S+10)}$$

-Zv:

$$\frac{\Theta}{/Xc} = \frac{38.98(S+0.006396)(S+0.4966)}{(S+0.3691)(S+1.1457)(S-0.03951\pm j0.1387)(S+20)(S+10)}$$

10 Zα:

$$\frac{\Theta}{/Xc} = \frac{38.98(S+0.03594)(S+4.8535)}{(S+0.6262)(S+5.1081)(S-0.002192\pm j0.1771)(S+20)(S+10)}$$

5 Zα:

$$\frac{\Theta}{/Xc} = \frac{38.98(S+0.03862)(S+2.4314)}{(S+0.5756)(S+2.7855)(S-0.0001296\pm j0.1782)(S+20)(S+10)}$$

2 Zα:

$$\frac{\Theta}{/Xc} = \frac{38.98(S+0.04693)(S+0.9714)}{(S+0.4249)(S+1.5044)(S+0.005036\pm j0.1822)(S+20)(S+10)}$$

ZERO Zα:

$$\frac{\Theta}{/Xc} = \frac{38.98(S+0.02526\pm j0.1128)}{(S+0.03208)(S+0.9741)(S-0.007182\pm j0.2164)(S+20)(S+10)}$$

100 Mv:

$$\frac{\theta}{/Xc} = \frac{38.98(S+0.1743)(S+0.4322)}{(S+0.4992)(S+1.7158)(S-0.3747\pm j1.0206)(S+20)(S+10)}$$

10 Mv:

$$\frac{\theta}{/Xc} = \frac{38.98(S+0.071706)(S+0.4693)}{(S+0.4038)(S+1.2615)(S-0.09982\pm j0.4370)(S+20)(S+10)}$$

5 Mv:

$$\frac{\theta}{/Xc} = \frac{38.98(S+0.06656)(S+0.4708)}{(S+0.3607)(S+1.2186)(S-0.05686\pm j0.3385)(S+20)(S+10)}$$

2 Mv:

$$\frac{\theta}{/Xc} = \frac{38.98(S+0.06348)(S+0.4717)}{(S+0.3042)(S+1.1906)(S-0.01461\pm j0.2430)(S+20)(S+10)}$$

ZERO Mv:

$$\frac{\theta}{/Xc} = \frac{38.98(S+0.06144)(S+0.4722)}{(S+0.05414)(S+1.1708)(S+0.1203\pm j0.07159)(S+20)(S+10)}$$

-2 Mv:

$$\frac{\theta}{/Xc} = \frac{38.98(S+0.05941)(S+0.4728)}{(S-0.1698)(S+1.150)(S+0.2427\pm j0.1957)(S+20)(S+10)}$$

-5 Mv:

$$\frac{\theta}{/Xc} = \frac{38.98(S+0.05637)(S+0.4737)}{(S-0.2757)(S+1.1165)(S+0.3124\pm j0.2503)(S+20)(S+10)}$$

-10 Mv:

$$\frac{\theta}{/Xc} = \frac{38.98(S+0.05132)(S+0.4751)}{(S-0.3827)(S+1.0533)(S+0.3975\pm j0.2995)(S+20)(S+10)}$$

-100 Mv:

$$\frac{\theta}{/Xc} = \frac{38.98(S-0.03493)(S+0.4958)}{(S-1.0088)(S+0.5527)(S+0.9608\pm j0.9423)(S20)(S+10)}$$

219.78 M_α: (M_α = -4.0)

$$\frac{\Theta}{/X_c} = \frac{38.98(S+0.1314\pm j0.09455)}{(S+0.7358\pm j1.9378)(S-0.002978\pm j0.2567(S+20)(S+10)}$$

10 M_α:

$$\frac{\Theta}{/X_c} = \frac{38.98(S+0.06388)(S+0.4594)}{(S+0.5610)(S+0.9155)(S-0.005477\pm j0.2094)(S+20)(S+10)}$$

5 M_α:

$$\frac{\Theta}{/X_c} = \frac{38.98(S+0.06308)(S+0.4664)}{(S+0.3757)(S+1.0889)(S+0.0005170\pm j0.1998)(S+20)(S+10)}$$

ZERO M_α:

$$\frac{\Theta}{/X_c} = \frac{38.98(S+0.06231)(S+0.4733)}{(S+0.2379)(S+1.2009)(S+0\ 01339\pm j0.1877)(S+20)(S+10)}$$

-M_α:

$$\frac{\Theta}{/X_c} = \frac{38.98(S+0.06216)(S+0.4747)}{(S+0.2101)(S+1.2202)(S+0.01764\pm j0.1851)(S+20)(S+10)}$$

-5 M_α:

$$\frac{\Theta}{/X_c} = \frac{38.98(S+0.06156)(S+0.4803)}{(S+0.08589)(S+1.2905)(S+0.04459\pm j0.1821)(S+20)(S+10)}$$

-10 M_α:

$$\frac{\Theta}{/X_c} = \frac{38.98(S+0.06084)(S+0.4872)}{(S-0.03504)(S+1.3674)(S+0.06661\pm j0.2095)(S+20)(S+10)}$$

5 $\dot{M}_\alpha$:

$$\frac{\Theta}{/X_c} = \frac{38.98(S+0.06182)(S+0.5212)}{(S+0.08701)(S+2.3847)(S+0.01991\pm j0.2238)(S+20)(S+10)}$$

ZERO $\dot{M}_\alpha$:

$$\frac{\Theta}{/X_c} = \frac{38.98(S+0.06263)(S+0.4609)}{(S+0.3779\pm j0.1094)(S-0.0008609\pm j0.1812)(S+20)(S+10)}$$

-3 $M_{\dot{\alpha}}$:

$$\frac{\Theta}{/Xc} = \frac{38.98(S+0.06313)(S+0.4303)}{(S+0.1582\pm j0.5908)(S-0.04835\pm j0.1674)(S+20)(S+10)}$$

-5 $M_{\dot{\alpha}}$:

$$\frac{\Theta}{/Xc} = \frac{38.98(S+0.06348)(S+0.4118)}{(S-0.09615\pm j0.5321)(S-0.1055\pm j0.1664)(S+20)(S+10)}$$

10 M_q:

$$\frac{\Theta}{/Xc} = \frac{38.98(S+0.06246)(S+0.4720)}{(S+0.4330)(S+6.6366)(S+0.03339\pm j0.05326)(S+20)(S+10)}$$

5 M_q:

$$\frac{\Theta}{/Xc} = \frac{38.98(S+0.06246)(S+0.4720)}{(S+0.4035)(S+3.5127)(S+0.03489\pm j0.08243)(S+20)(S+10)}$$

2 M_q:

$$\frac{\Theta}{/Xc} = \frac{38.98(S+0.06246)(S+0.4720)}{(S+0.3282)(S+1.7043)(S+0.03155\pm j0.1389)(S+20)(S+10)}$$

1/2 M_q:

$$\frac{\Theta}{/Xc} = \frac{38.98(S+0.06246)(S+0.4720)}{(S+0.2298)(S+0.9719)(S-0.02557\pm j0.2240)(S+20)(S+10)}$$

ZERO M_q:

$$\frac{\Theta}{/Xc} = \frac{38.98(S+0.06246)(S+0.4720)}{(S+0.2003)(S+0.8174)(S-0.09112\pm j0.2471)(S+20)(S+10)}$$

5 M_{δ_e} :

$$\frac{\Theta}{/Xc} = \frac{130.80(S+0.06176)(S+0.4654)}{(S+0.2650)(S+1.1808)(S+0.009876\pm j0.1902)(S+20)(S+10)}$$

ZERO M_{δ_e}:

$$\frac{\Theta}{/Xc} = \frac{16.02(S+0.06383)(S+0.4855)}{(S+0.2650)(S+1.1808)(S+0.009876\pm j0.1902)(S+20)(S+10)}$$

5 M_{δ_H}:

$$\frac{\Theta}{Xc} = \frac{106.36(S+0.06183)(S+0.4660)}{(S+0.2650)(S+1.1808)(S+0.009876\pm j0.1902)(S+20)(S+10)}$$

ZERO M_{δ_H}:

$$\frac{\Theta}{Xc} = \frac{22.13(S+0.06320)(S+0.4791)}{(S+0.2650)(S+1.1808)(S+0.009876\pm j0.1902)(S+20)(S+10)}$$

3 DOF AUGMENTED AIRCRAFT LONGITUDINAL TRANSFER FUNCTIONS (BASELINE AUGMENTATION)

BASELINE:

$$\Theta/X_c = \frac{38.98(S+0.06266)(S+0.4705)}{(S+5.0905\pm j1.7179)(S+0.01707\pm j0.07619)(S+20)(S+0.6452)}$$

-5 Xv: Unstable phugoid

$$\Theta/X_c = \frac{38.98(S-0.1384)(S+0.4749)}{(S+5.0905\pm j1.7179)(S-0.07309)(S-0.08546)(S+20)(S+0.6413)}$$

10 Xv:

$$\Theta/X_c = \frac{38.98(S+0.41406\pm j0.02888)}{(S+5.0906\pm j1.7180)(S+0.01964)(S+0.2953)(S+20)(S+0.6[illegible])}$$

5 X_α:

$$\Theta/X_c = \frac{38.98(S+0.2717\pm j0.09595)}{(S+5.0908\pm j1.7168)(S+0.07663\pm j0.04524)(S+20)(S+0.5356)}$$

-5 X_α: Unstable phugoid

$$\Theta/X_c = \frac{38.98(S-0.08444)(S+0.6022)}{(S+5.0901\pm j1.7195)(S-0.04578\pm j0.04992)(S+20)(S+0.7567)}$$

ZERO X_{δ_H}:

$$\Theta/X_c = \frac{38.97(S+0.062038)(S+0.4715)}{(S+5.0905\pm j1.7179)(S+0.01707\pm j0.07619)(S+20)(S+0.6452)}$$

5 X_{δ_H}:

$$\Theta/X_c = \frac{38.99(S+0.06519)(S+0.4663)}{(S+5.0905\pm j1.7179)(S+0.01707\pm j0.07619)(S+20)(S+0.6452)}$$

ZERO Zv:

$$\Theta/X_c \quad \frac{38.98(S+0.03366)(S+0.4852)}{(S+5.0940\pm j1.7204)(S+0.01629\pm j0.07289)(S+20)(S+0.6249)}$$

100 Zv:

$$\frac{\Theta}{/Xc} = \frac{38.98(S+0.[illegible]\pm j0.6150)}{(S+4.0331\pm j1.4689)(S+0.0[illegible]228\pm j0.1268)(S+20)(S+4.1885)}$$

ZERO Z_α:

$$\frac{\Theta}{/Xc} = \frac{38.98(S+0.024606\pm j0.1130)}{(S+5.1591\pm j1.8512)(S+0.002244\pm j0.08729)(S+20)(S+0.06395)}$$

5 Z_α:

$$\frac{\Theta}{/Xc} = \frac{38.98(S+0.03864)(S+2.4304)}{(S+3.4914\pm j1.8222)(S+0.01669\pm j0.07376)(S+20)(S+5.7396)}$$

ZERO Z_{δ_e}:

$$\frac{\Theta}{/Xc} = \frac{39.45(S+0.06244)(S+0.4522)}{(S+5.4014\pm j0.70217)(S+0.01705\pm j0.07613)(S+20)(S+0.6287)}$$

5 $Z_{\delta e}$:

$$\frac{\Theta}{/Xc} \quad \frac{37.05(S+0.06353)(S+0.5624)}{(S+3.8442\pm j3.3225)(S+0.01718\pm j0.076406)(S+20)(S+0.7171)}$$

ZERO $Z_{\delta H}$:

$$\frac{\Theta}{/Xc} = \frac{39.33(S+0.062295)(S+0.4807)}{(S+5.0905\pm j1.7179)(S+0.01707\pm j0.07619)(S+20)(S+0.6452)}$$

5 $Z_{\delta H}$:

$$\frac{\Theta}{/Xc} = \frac{37.57(S+0.06418)(S+0.4334)}{(S+5.0905\pm j1.7179)(S+0.01707\pm j0.07619)(S+20)(S+0.6452)}$$

10 Mv:

$$\frac{\Theta}{/Xc} = \frac{38.98(S+0.07199)(S+0.4675)}{(S+5.0968\pm 1.7192)(S+0.01809\pm j0.2361)(S+20)(S+0.6307)}$$

-10 Mv: Unstable phugoid

$$\frac{\Theta}{/Xc} = \frac{38.98(S+0.05145)(S+0.4740)}{(S+5.0828\pm j1.7162)(S+0.2415)(S-0.21[illegible])(S+20)(S+0.6684)}$$

5 M_α:

$$\frac{\Theta}{/Xc} = \frac{38.98(S+0.06206)(S+0.5196)}{(S+5.810\pm j2.4988)(S+0.04339\pm j0.07226)(S+20)(S+0.3995)}$$

-5 $M_{\dot{\alpha}}$:

$$\frac{\Theta}{/Xc} = \frac{38.98(S+0.06370)(S+0.4105)}{(S+1.470\pm j1.090)(S-0.01337\pm j0.07348)(S+20)(S+6.0782)}$$

-10 M_α:

$$\frac{\Theta}{/Xc} = \frac{38.98(S+0.06103)(S+0.4858)}{(S+5.1225\pm j1.7422)(S+0.07364)(S-0.01915)(S+20)(S+0.5609)}$$

M_α = -4.0 : Unstable phugoid

$$\frac{\Theta}{/Xc} = \frac{38.98(S+0.1308\pm j0.09545)}{(S+3.0339\pm j1.2398)(S-0.01165\pm j0.2336)(S+20)(S+4.08044)}$$

ZERO M_q:

$$\frac{\Theta}{/Xc} = \frac{38.98(S+0.06266)(S+0.4705)}{(S+\ \ 54\pm j0.2736)(S+0.01471\pm j0.08387)(S+20)(S+0.6902)}$$

10 M_q:

$$\frac{\Theta}{/Xc} = \frac{38.98(S+0.06266)(S+0.4705)}{(S+7.9676\pm j4.3643)(S+0.02477\pm j0.04363)(S+20)(S+0.5465)}$$

ZERO M_{δ_e}: $\omega_{n_{sp}}$ is too small

$$\frac{\Theta}{/Xc} = \frac{16.02(S+0.06355)(S+0.5229)}{(S+0.2818)(S+1.1363)(S+0.01274\pm j0.1936)(S+20)(S+9.4169)}$$

5 M_{δ_e}:

$$\frac{\Theta}{/Xc} = \frac{130.80(S+0.06219)(S+0.4475)}{(S+5.0662\pm j9.4888)(S+0.01053\pm j0.03573)(S+20)(S+0.7071)}$$

ZERO $M_{\delta H}$:

$$\frac{\Theta}{/Xc} = \frac{22.13(S+0.06377)(S+0.4530)}{(S+5.0905\pm j1.7179)(S+0.01707\pm j0.07619)(S+20)(S+0.6452)}$$

5 $M_{\delta H}$:

$$\frac{\Theta}{/Xc} = \frac{106.36(S+0.06173)(S+0.4864)}{(S+5.0905\pm j1.7179)(S+0.01707\pm j0.07619)(S+20)(S+0.6452)}$$

3 DOF AUGMENTED AIRCRAFT LONGITUDINAL TRANSFER FUNCTIONS (REVISED AUGMENTATION)

-5 Xv: $K_\alpha = 10.0$, $K_\Theta = 12.6$, $K_q = 15.0$

$$\Theta/X_c = \frac{38.98(S-0.1367)(S+0.4746)}{(S+1.0693\pm j0.7863)(S+0.01688\pm j0.08283)(S+9.0966)(S+20)}$$

-5 X_α: $K_\Theta = 3.0$, $K_q = 40.0$

$$\Theta/X_c = \frac{38.98(S-0.08428)(S+0.6033)}{(S+5.4685\pm j1.3227)(S+0.0009853\pm j0.02949)(S+20)(S+0.5116)}$$

-10 Mv: $K_\alpha = 50.0$, $K_q = 150.0$

$$\Theta/X_c = \frac{38.98(S+0.07289)(S+0.4619)}{(S+5.3074\pm j8.0011)(S+0.003225\pm j0.1648)(S+20)(S+0.8444)}$$

-5 $M_{\dot\alpha}$: $K_q = 100$, $K_{n_z} = 0.0$

$$\Theta/X_c = \frac{38.98(S+0.06348)(S+0.4118)}{(S+4.4870\pm j5.8303)(S+0.01164\pm j0.0580)(S+20)(S+0.5995)}$$

-10 M_α: $K_\alpha = 4.0$, $K_q = 40.0$

$$\Theta/X_c = \frac{38.98(S+0.06162)(S+0.4865)}{(S+5.4802\pm j1.3623)(S+0.03196\pm j0.09327)(S+20)(S+0.4414)}$$

$M_\alpha = -4.0$: $K_\Theta = 5.0$

$$\Theta/X_c = \frac{38.98(S+0.1314\pm j0.09455)}{(S+0.7118\pm j2.0066)(S+0.005883\pm j0.2520)(S+10)(S+20)}$$

ZERO M_{δ_e}: Equivalent augmentation through horizontal stabilizer

$$\Theta/X_c = \frac{38.98(S+0.06424)(S+0.4422)}{(S+5.0926\pm j1.7170)(S+0.01749\pm j0.0760)(S+0.6463)(S+20)}$$

APPENDIX IV

ANALYSIS FOR INCREASING YAW AND ROLL CONTROL EFFECTIVENESS WITH CONTROL BLENDING TECHNIQUES

The data contained in this report indicate that there are several situations where yaw or roll control power capability is insufficient to meet Level 1 requirements on ψ_t or t_{30} as per Reference 1. In an effort to increase control power, a preliminary analysis of control blending techniques was conducted for each of these situations.

BASELINE AIRCRAFT

The most significant lack of sufficient control power is the yaw control effectiveness for the baseline case. As data from Section III indicate, the most straight forward method of satisfying this requirement is to increase $N_{\delta r}$ by 30 percent. However, it is possible to achieve an increase in yaw control power through control blending techniques.

The technique used in increasing yaw control power was to use a mechanical interconnect from the yaw controller (pedal) to the roll control surfaces. Figure IV-1 shows the primary yaw and roll flight control systems for this mechanization. Figure IV-2 shows the effect on ψ_t by varying the magnitude and direction of the ailerons as commanded by this system. Results indicate that negative aileron deflections are required to increase yaw control in a negative (nose left) heading command. For this open loop system a 60-percent negative aileron command is required to meet Level 1 requirements on ψ_t with no surface rate limiting.

In analyzing the baseline augmentation system with control blending, the mechanization shown in Figure IV-3 was used. In this mechanization pedal position is electrically fed through a one-second washout into roll augmentation. While the use of a washout in this case would in general produce adverse steady state handling qualities and would probably not be included in the final configuration, its use here was intended to simplify the preliminary analysis. The washout circuit was added to avoid the need to trim roll for steady state pedal or yaw trim inputs and avoid redefinition of augmentation dynamic loop gains. Using this yaw control system with the baseline augmentation operating, Figure IV-4 shows the increased heading change capability of the aircraft with 50 percent and 100 percent rudder coupling as compared to no rudder coupling. Figure IV-5 shows the bank angles generated for each of the rudder coupling gains. As this figure indicates, larger than normal bank angles can be generated by this method which require more roll trim than for the uncoupled case. Figures IV-6 and IV-7 show the resulting aileron and rudder deflections.

In the above analysis it is to be noted that surface rate limitations were eliminated. With no surface rate limitation the baseline augmented

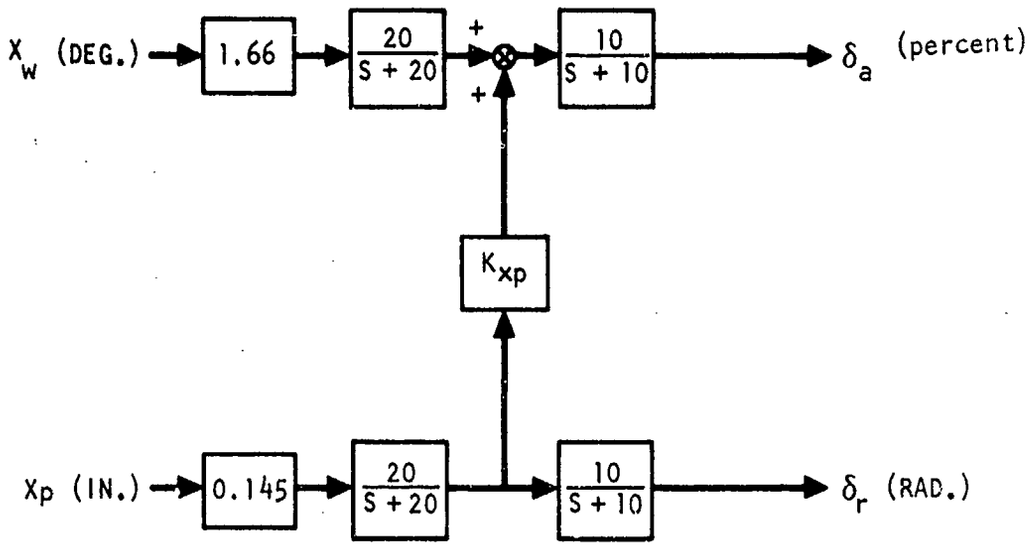

Figure IV-1. Open Loop Mechanical Coupling from Yaw Control Command to Aileron

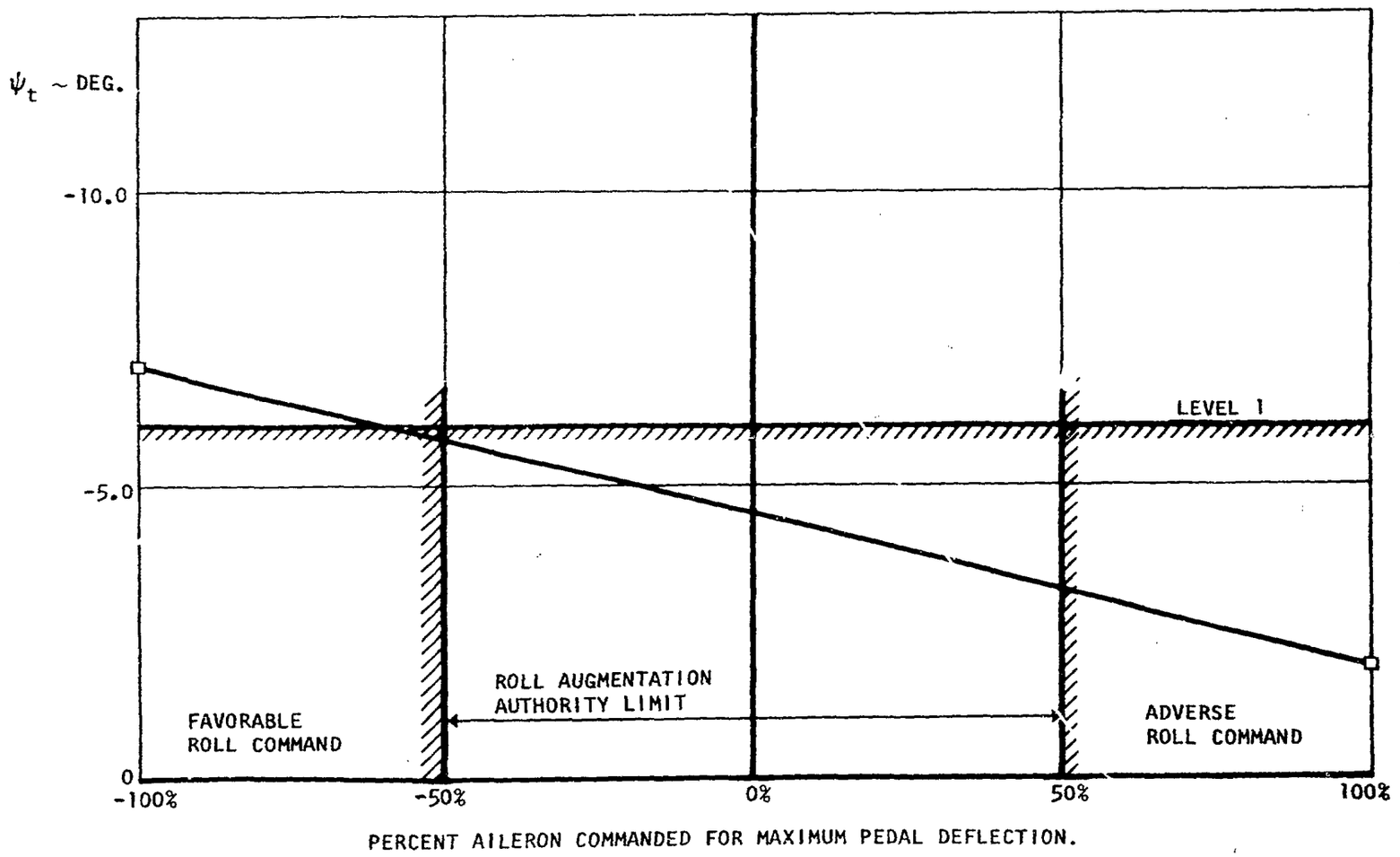

Figure IV-2. Effect of Varying K_{xp} on Heading Change in 1.0 Second

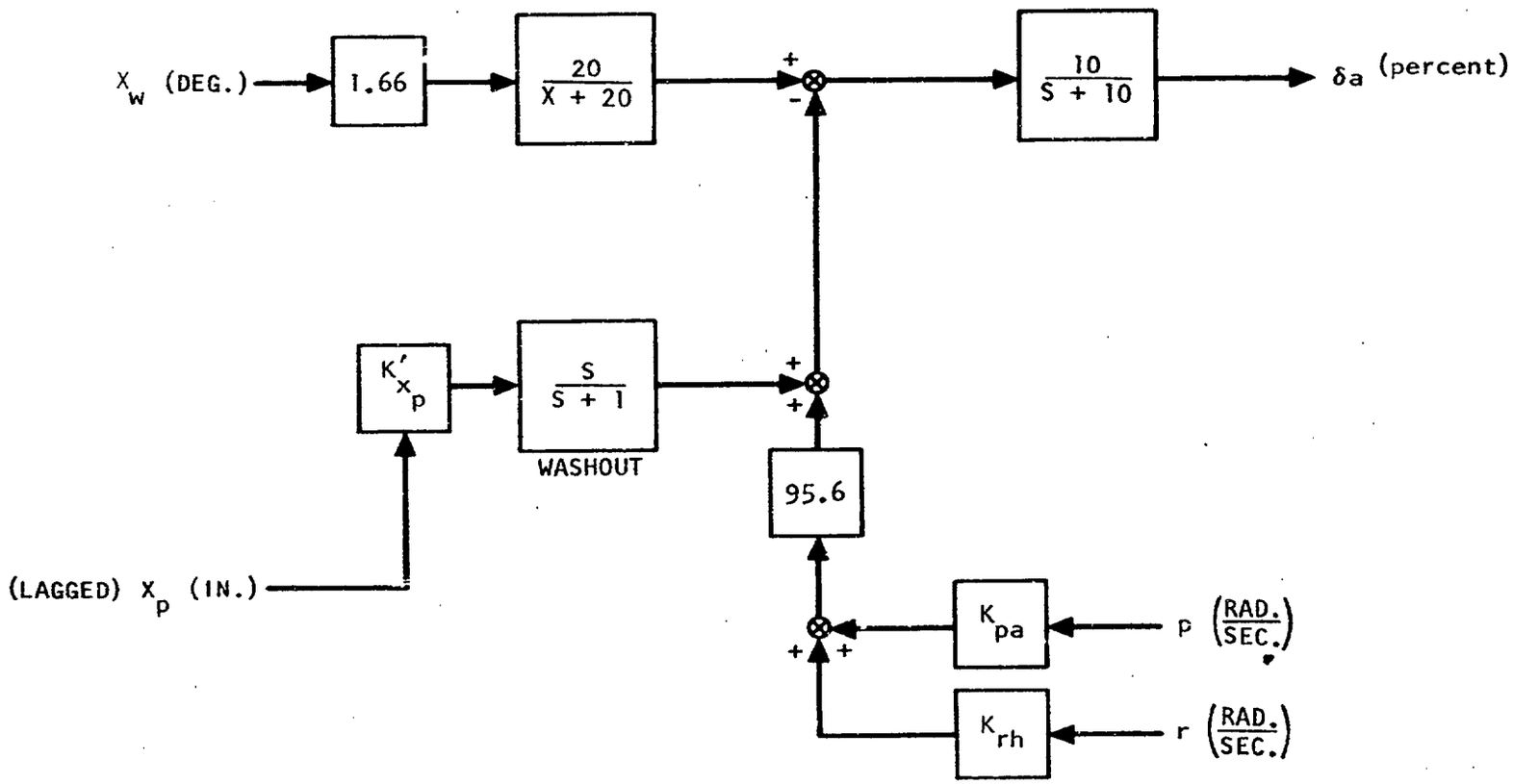

Figure IV-3. Baseline Roll Control and Augmentation System with Pedal Coupling

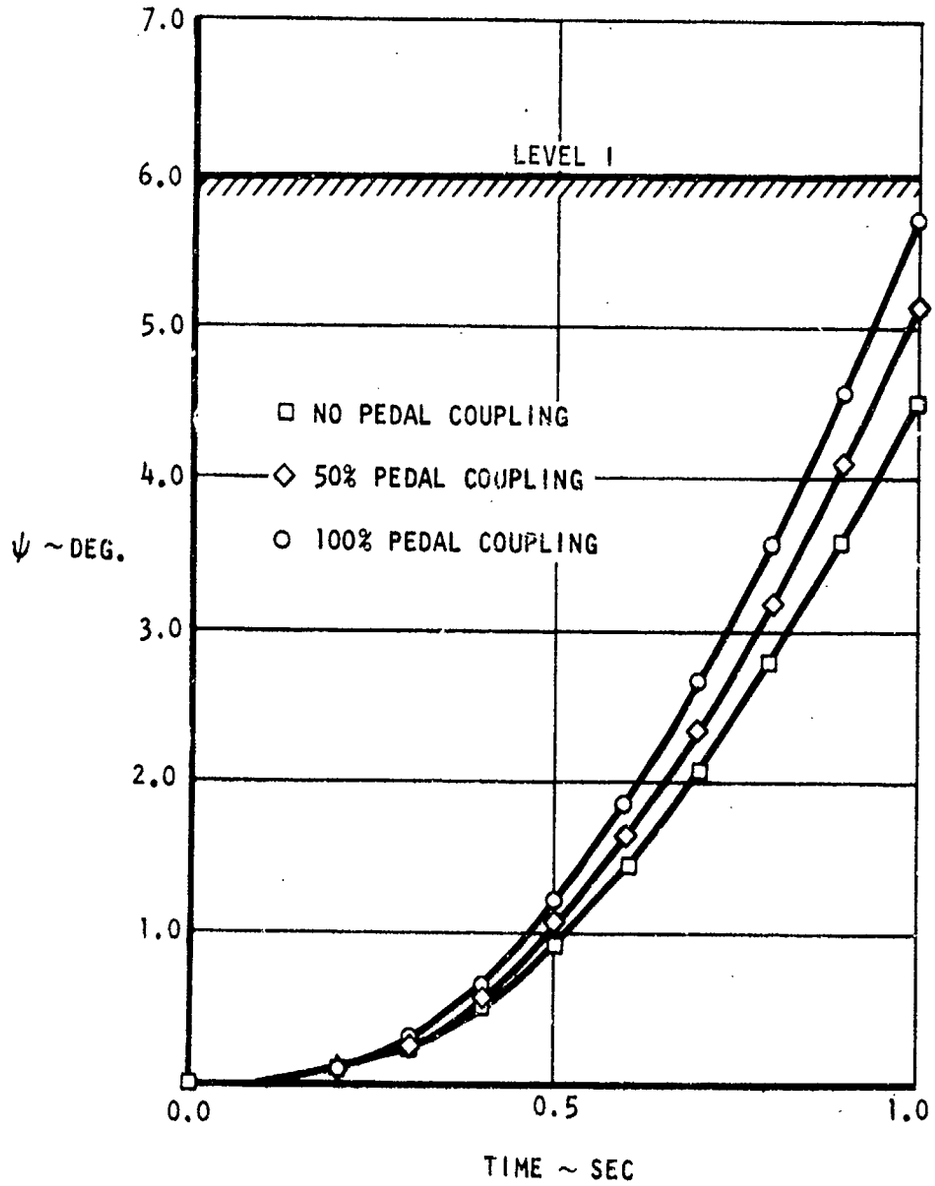

Figure IV-4. Effect of Varying K'_{xp} on Heading Angle with Pedal Step Input - Baseline Augmentation On

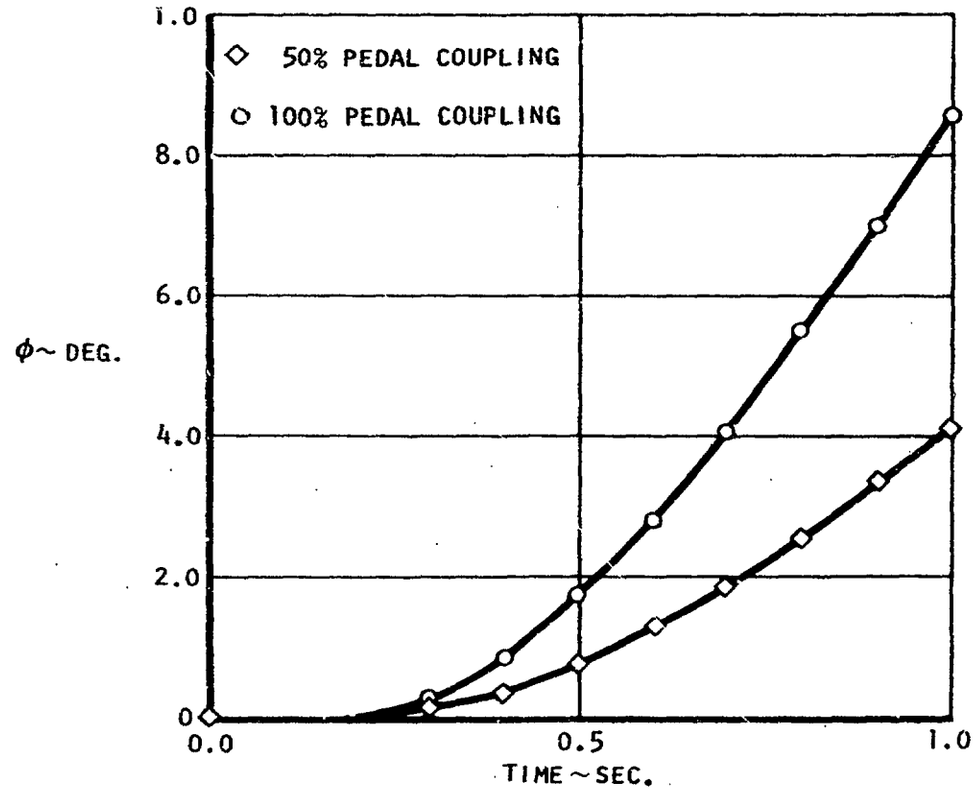

Figure IV-5. Effect of Varying K'_{xp} on Bank Angle with Pedal Step Input - Baseline Augmentation On

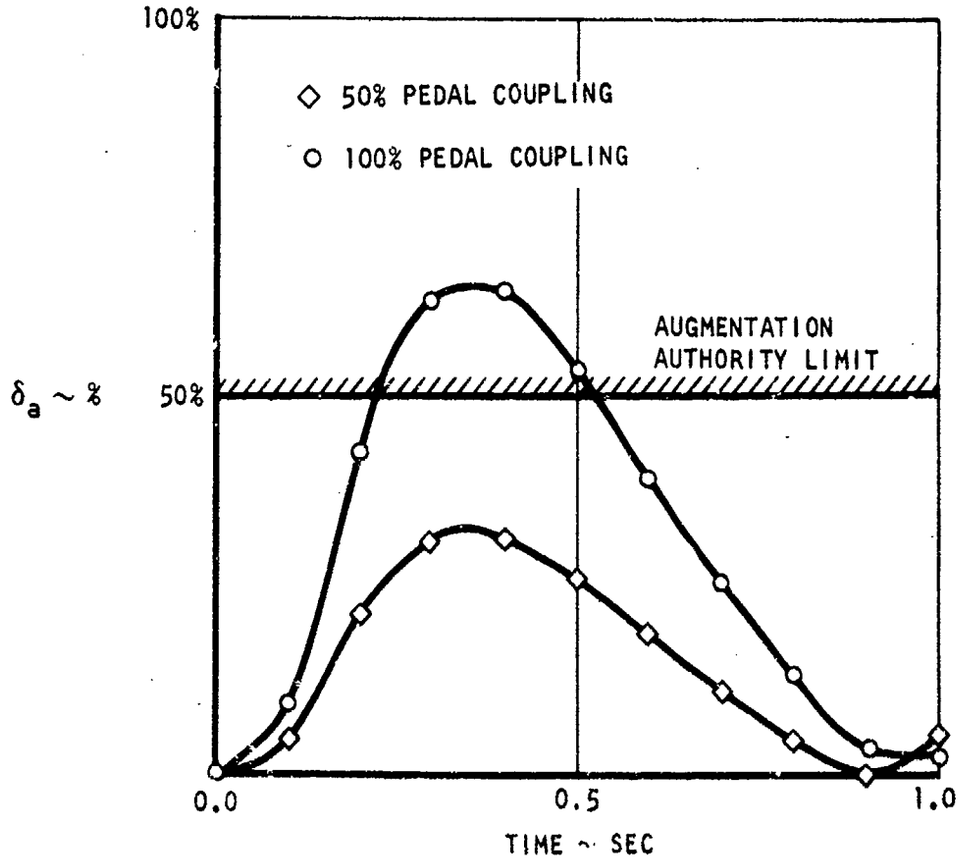

Figure IV-6. Effect of Varying K_{xp}' on Aileron Deflection with Pedal Step Input - Baseline Augmentation On

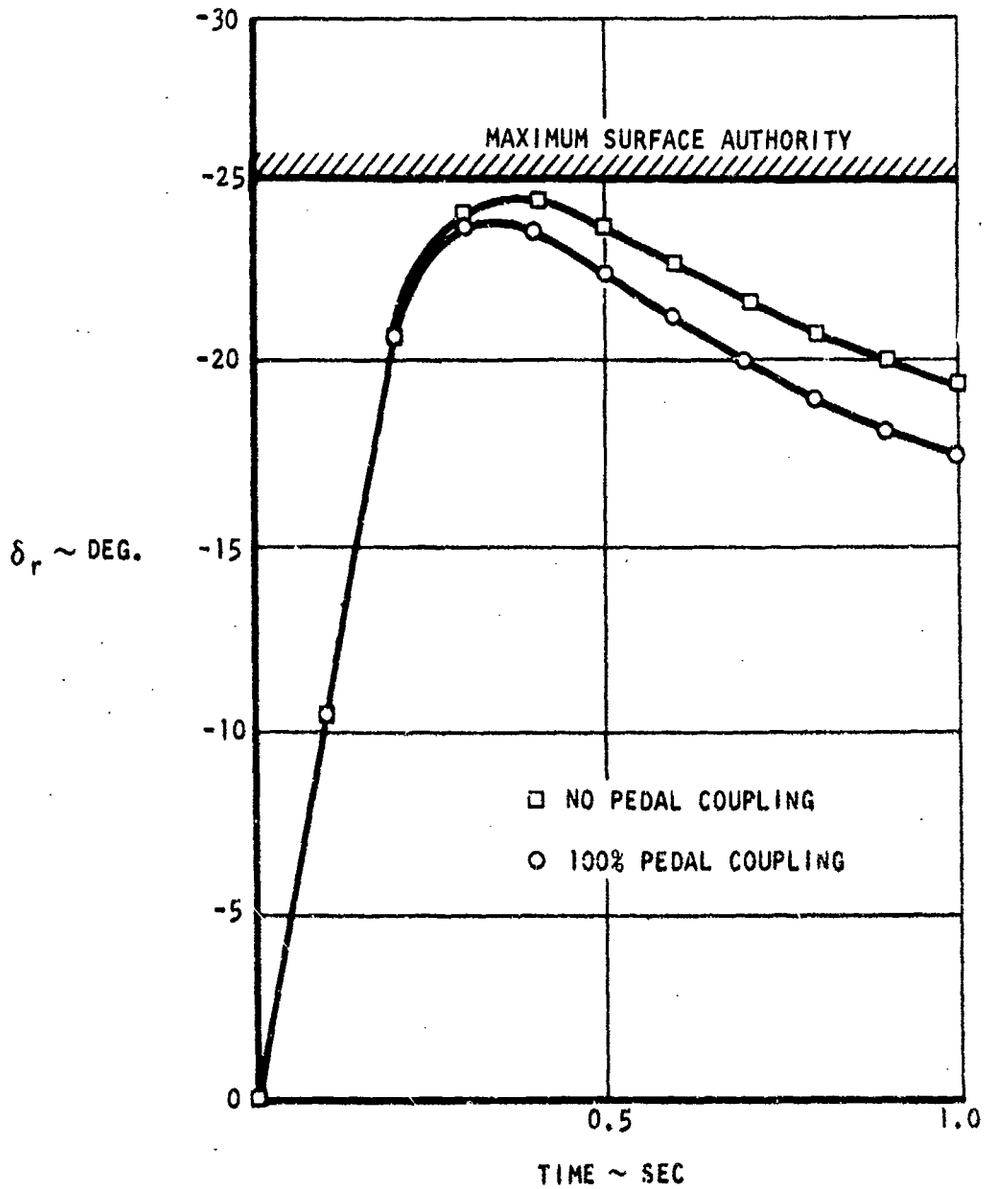

Figure IV-7. Effect of Varying K'_{xp} on Rudder Deflection with Pedal Step Input - Baseline Augmentation On

aircraft with no aileron coupling produced a heading change of 4.49 degrees in 1.0 second. With a rudder surface rate limit of 50 deg/sec. Only a 3.25-degree heading change was produced in 1.0 second. If a comparable degradation in heading change is assumed for the open loop mechanical system, Figure IV-2 indicates that more than 100 percent ailerons would be required to meet Level 1 standards.

5Lp ANALYSIS

The first attempt on augmenting the 5 times Lp case was to redefine gains in the augmentation system through the simultaneous solution of coefficients method. However, this technique only allowed the augmented value for t_{30} to be approximately the same as the unaugmented value which was already unacceptable by Level 1 standards. No further improvement through the roll augmentation system could be achieved since the wheel step was already commanding full aileron. To improve the roll capability of the aircraft with a large roll damping term it was then decided to introduce a wheel coupling into the yaw augmentation system similar to the pedal coupling into roll used in the analysis to increase rudder effectiveness for the baseline case.

As the unaugmented results of Figure IV-8 indicate, only negative rudder deflections significantly reduce t_{30} response over that of the unaugmented case. This effect is indicated by the 3 DOF rolling moment equation

$$\dot{p} = \overset{-}{L_p} \cdot p + \overset{+}{L_r} \cdot r + \overset{-}{L_\beta} \cdot \beta + \overset{+}{L_{\delta a}} \cdot \delta_a + \overset{+}{L_{\delta r}} \cdot \delta_r \qquad \text{(AIV-1)}$$

where the sign associated with each coefficient is shown above its respective coefficient. Since a positive rudder induces negative yaw rate (r) and positive sideslip (β), equation (AIV-1) shows that although rudder increases $\dot{p}$ through the $L_{\delta r}$ term, the adverse yaw rate and sideslip induced tend to reduce $\dot{p}$. For the coefficient values studied, $\dot{p}$ can only be increased by a negative rudder deflection. It is important to note that for some other rolling moment coefficient values this mechanization could be reversed requiring a positive rudder to increase p depending on the relative magnitudes of $L_r \cdot r$, $L_\beta \cdot \beta$, and $L_{\delta r} \cdot \delta_r$.

For the five times Lp case the mechanization as shown in Figure 20 of Section III was used. This system commands full negative rudder when a full wheel input is applied. Although this method is incapable of meeting t_{30} Level 1 standards for this large value of Lp, considerable improvement over the unaugmented aircraft is realizable. Various values of Lp were then investigated with this mechanization to define a maximum Lp at which Level 1 requirements can be met with augmentation on, a maximum value of 4.3 times Lp was thus determined.

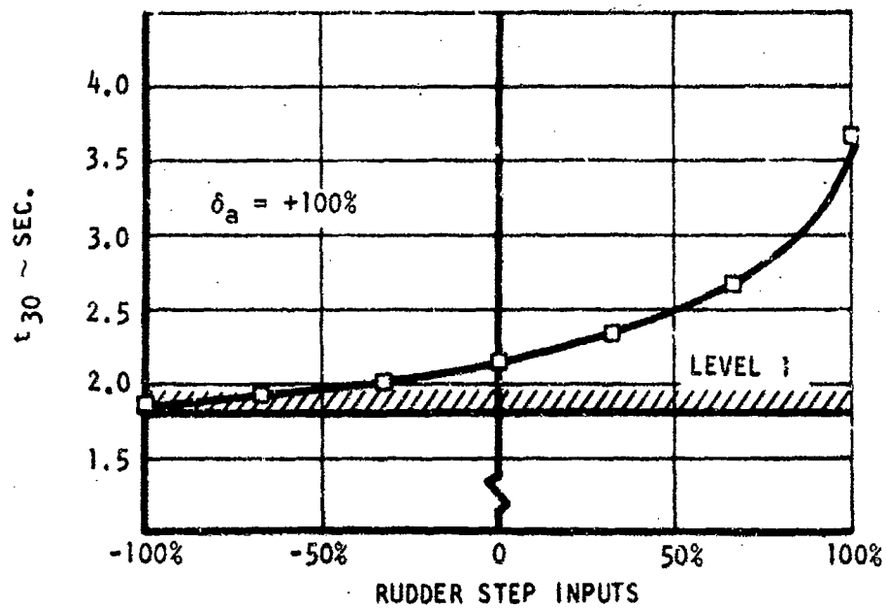

Figure IV-8. Evaluation of Rudder Step Inputs with 100% Wheel Step Input for 5Lp Case - No Augmentation

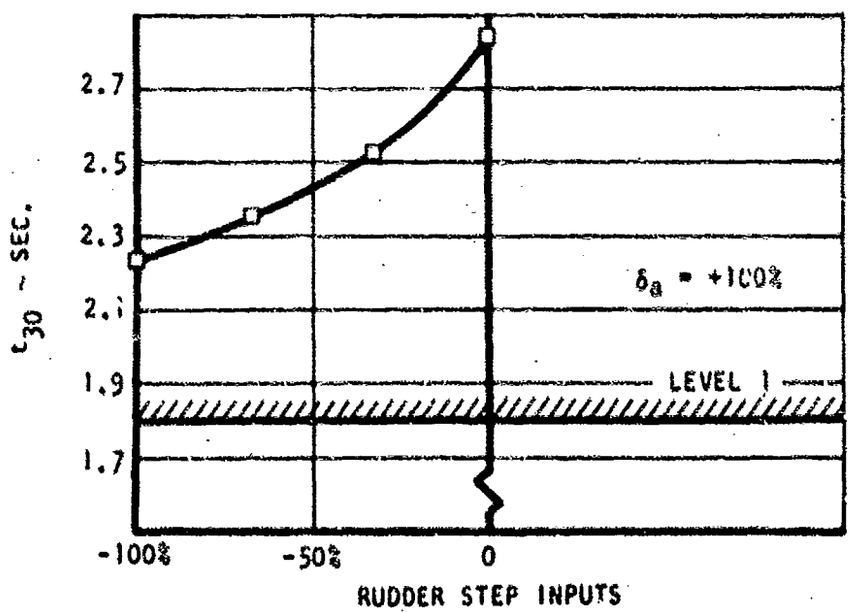

Figure IV-9. Evaluation of Rudder Step Inputs with 100% Wheel Step Input for 1/5 L_{δ_a} Case - No Augmentation

0.2 $L_{\delta a}$ ANALYSIS

For small values of $L_{\delta a}$, the roll effectiveness of the ailerons is reduced to such a point that they cannot produce sufficient rolling moment to meet Level 1 t_{30} requirements. As Figure IV-9 indicates a negative rudder deflection can significantly reduce t_{30} for the 0.2 times $L_{\delta a}$ case, however, this low value of $L_{\delta a}$ cannot meet Level 1 t_{30} requirements. It is important to note here that both Figures IV-8 and IV-9 represent the unaugmented response of the aircraft with a mechanical wheel coupling system.

Figure IV-10 shows the roll and yaw control and augmentation systems used for the augmented $L_{\delta a}$ analysis. To maintain ailerons at full deflection a simulated command augmentation loop was used to override the roll augmentation feedback during wheel inputs. This system was then used to define a minimum $L_{\delta a}$ with which Level 1 t_{30} requirements can be met for the augmented aircraft. With this technique of increasing roll control power a minimum acceptable value of 0.4 times $L_{\delta a}$ was determined.

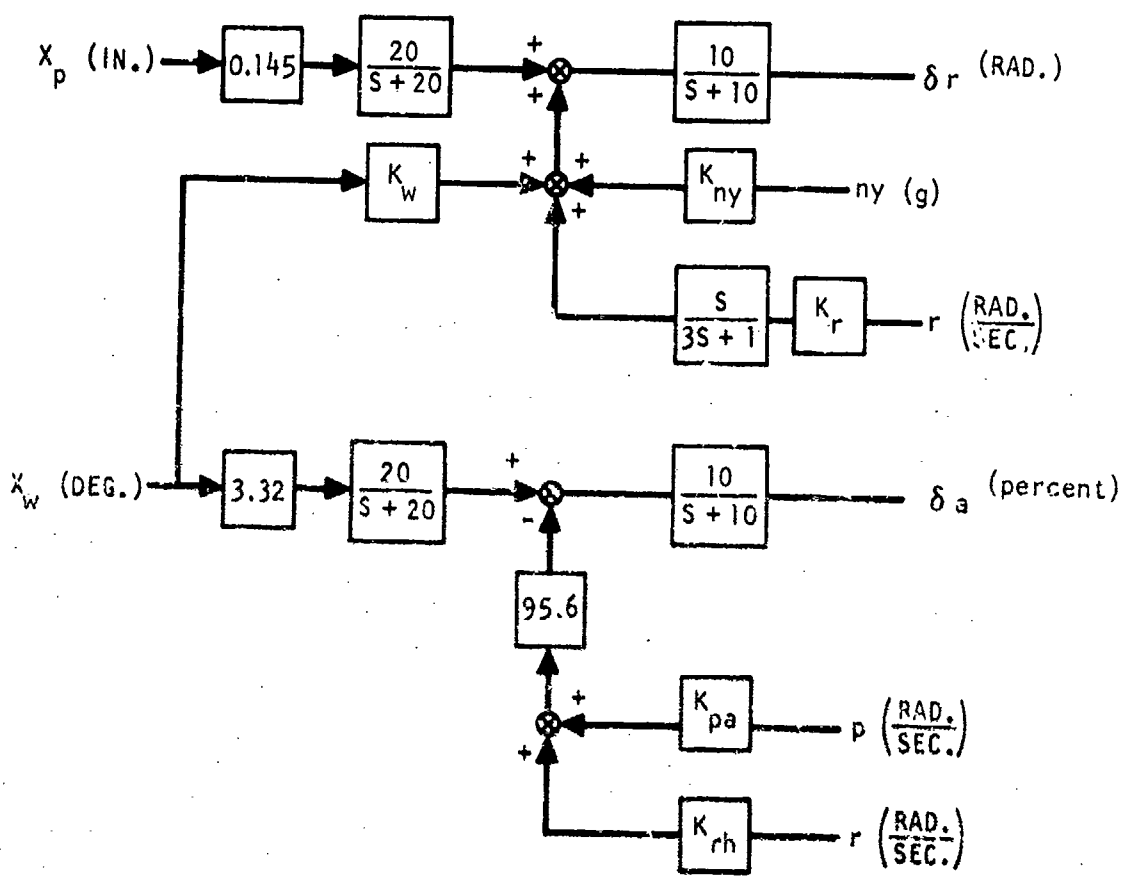

Figure IV-10. Roll and Yaw Control Systems w/Wheel Coupling into Yaw

APPENDIX V

ANALYSIS OF AIRCRAFT CAPABILITY TO TRIM

Using the pitching moment and normal force equations from the 6 DOF digital simulation program, an equation can be derived which will define approximate limits on Z_α, $Z_{\delta H}$, M_α and $M_{\delta H}$ with which the aircraft can be trimmed with horizontal stabilizers alone. Using the notation of the 6 DOF digital program with coefficients defined in Table V-I, the normal force and pitching moment equation at trim reduce to:

$$\frac{W \cos \theta_T}{T_{pe}} = NZOT + (NZAT)\alpha_T + (NZDHT)\delta_{H_T} \qquad \text{(AV-1)}$$

$$0 = MOT + (MAT)\alpha_T + (MDHT)\delta_{H_T} \qquad \text{(AV-2)}$$

If it is assumed that $\cos \theta_T \simeq 1.0$ then the two equations can be solved simultaneously for δ_{H_T} and α_T.

$$\delta_{H_T} = \frac{-MOT(NZAT) - MAT\left(\frac{W}{T_{pe}} - NZOT\right)}{NZAT(MDHT) - MAT(NZDHT)} \qquad \text{(AV-3)}$$

$$\alpha_T = \frac{MDHT\left(\frac{W}{T_{pe}} - NZOT\right) + MOT(NZDHT)}{NZAT(MDHT) - MAT(NZDHT)} \qquad \text{(AV-4)}$$

Substituting in the coefficient values for the baseline trim case a δ_{H_T} of -4.72 degrees and a α_T of 6.07 degrees are obtained as compared to trim values of -6.78 degrees and 5.03 degrees obtained from the 6 DOF digital program with a θ_T of 14.45 degrees.

Table V-II summarizes the results of varying NZAT, NZDHT, MAT, and MDHT in Equation AV-3. Figures V-1 through V-3 show the graphical results of this analysis.

Figures V-1 shows that the maximum stable M_α which can be trimmed with full horizontal stabilizer deflection is -1.8. Figure V-3 shows that values of Z_α less than -0.5 require rapidly increasing values of δ_{H_T} up to a maximum of 30.8 degrees for $z_\alpha = 0$. In order to trim this case additional trim through the elevator would be required. Such

TABLE V-I

DEFINITION OF COEFFICIENT NOTATION AS USED IN THE 6 DOF DIGITAL PROGRAM

$$NZØT = \left[\frac{N_{TOT}}{T_{pe}}\right]_{\alpha=0} \qquad MØT = \left[\frac{m_{TOT}}{T_{pe}\,\bar{c}}\right]_{\alpha=0} \qquad M_{\alpha} = \frac{T_{pe}\,\bar{c}}{I_y} MAT \qquad Z_{\alpha} = -\frac{T_{pe}}{m} NZAT$$

$$NZAT = \left[\frac{N_{TOT_{\alpha}}}{T_{pe}}\right] \qquad MAT = \left[\frac{m_{TOT_{\alpha}}}{T_{pe}\,\bar{c}}\right] \qquad M_{\delta_H} = \frac{T_{pe}\,\bar{c}}{I_y} MDHT \qquad Z_{\delta_H} = -\frac{T_{pe}}{m} NZDHT$$

$$NZDHT = \left[\frac{N_{TOT_{\delta_H}}}{T_{pe}}\right] \qquad MDHT = \left[\frac{m_{TOT_{\delta_H}}}{T_{pe}\,\bar{c}}\right]$$

$$NZDET = \left[\frac{N_{TOT_{\delta_e}}}{T_{pe}}\right] \qquad MDET = \left[\frac{m_{TOT_{\delta_e}}}{T_{pe}\,\bar{c}}\right]$$

TABLE V-II

SUMMARY OF $Z_{\delta H}$, $M_{\delta H}$, Z_{α}, AND M_{α} VARIATION ON AIRCRAFT CAPABILITY TO TRIM WITH HORIZONTAL STABILIZER ALONE

NZDHT or NZAT	$Z_{\delta H}$	δ_{HT} (Deg.)	Z_{α}	δ_{HT} (Deg.)	MDHT or MAT	$M_{\delta H}$	δ_{HT} (Deg.)	M_{α}	δ_{HT} (Deg.)
0	0	-4.8	0	30.8	10.0			1.7	2.5
1.0	-4.8	-4.7	-4.83	-1.6	5.0			0.85	-0.8
3.0	-14.5	-4.7			0.0	0	-510.	0	-5.1
5.0	-24.1	-4.65	-24.1	-4.3	-1.0	-0.17	-28.2		
10.0			-48.3	-4.7	-5.0	-0.85	-6.0	-0.85	-10.6
20.0			-96.5	-4.9	-10.0	-1.7	-3.0	-1.7	-18.2
25.0			-120.7	-4.9	-20.0	-3.4	-1.5	-3.4	-46.4

TABLE V-III

SUMMARY OF M_{α} AND $M_{\delta H}$ VARIATION ON AIRCRAFT CAPABILITY TO TRIM WITH FULL HORIZONTAL STABILIZER AND VARYING AMOUNTS OF ELEVATOR

MAT	M_{α}	δ_{eT} (Deg.)	MDHT	$M_{\delta H}$	δ_{eT} (Deg.)
-11.73	-2.0	-1.46	-1.173	-0.2	-0.8
-17.595	-3.0	-15.8	-0.88	-0.15	-1.65
-23.46	-4.0	-42.33	-0.59	-0.1	-2.48
			-0.29	-0.05	-3.34
			0.0	0.0	-4.16

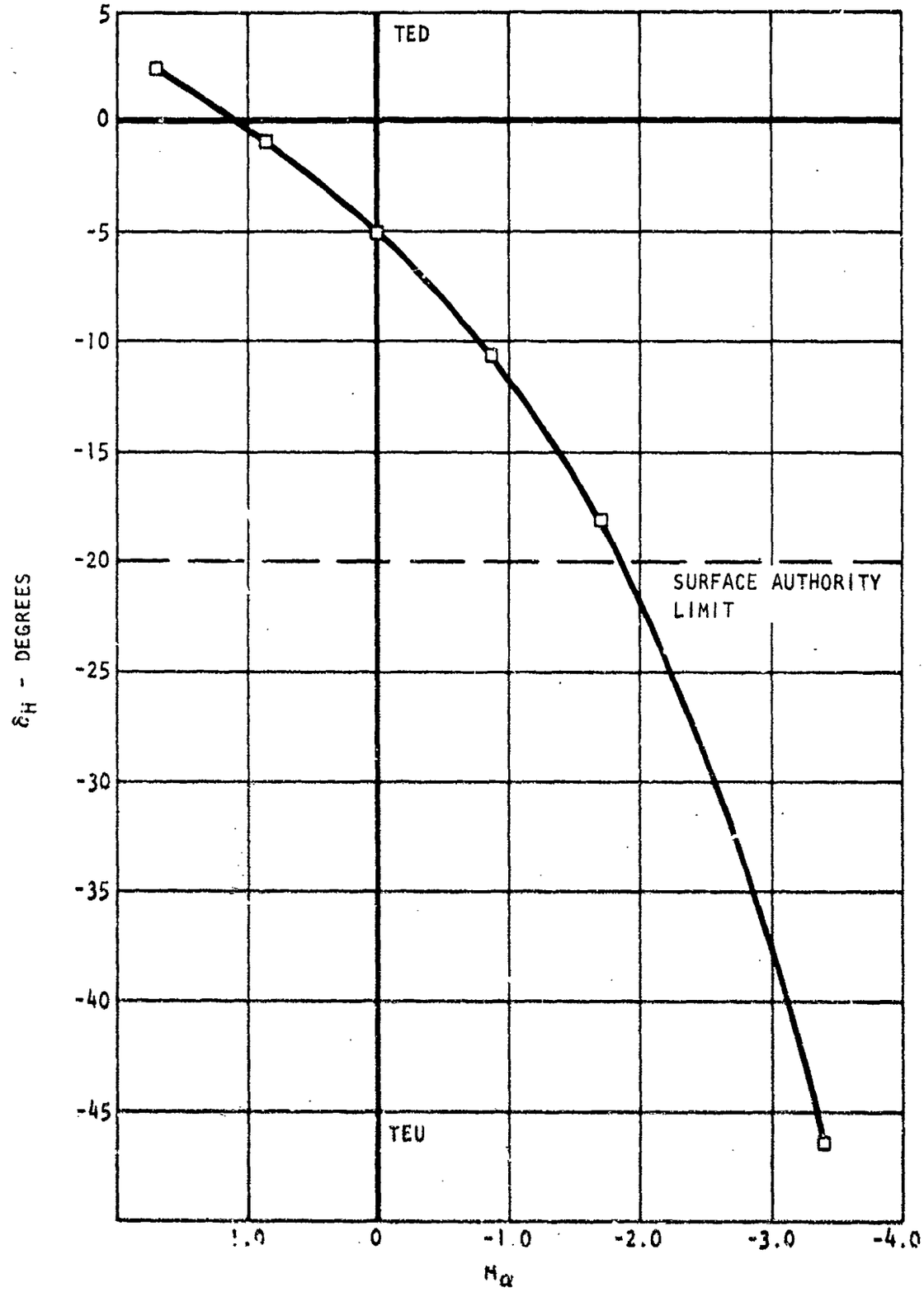

Figure V-1. Evaluation of M_α Variation on Aircraft Capability to Trim with Horizontal Stabilizer.

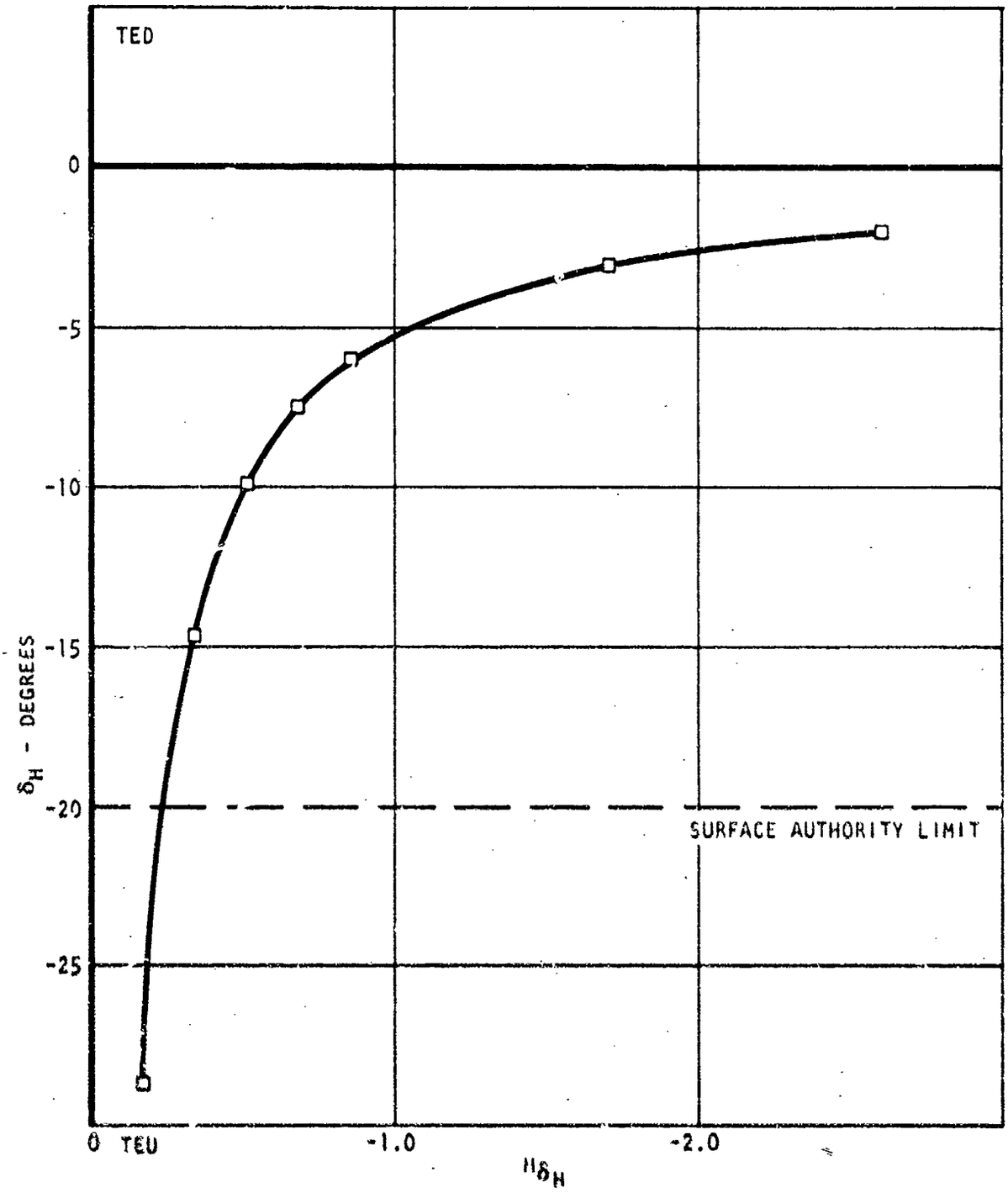

Figure V-2. Evaluation of M_{δ_H} Variation on Aircraft Capability to Trim with Horizontal Stabilizer.

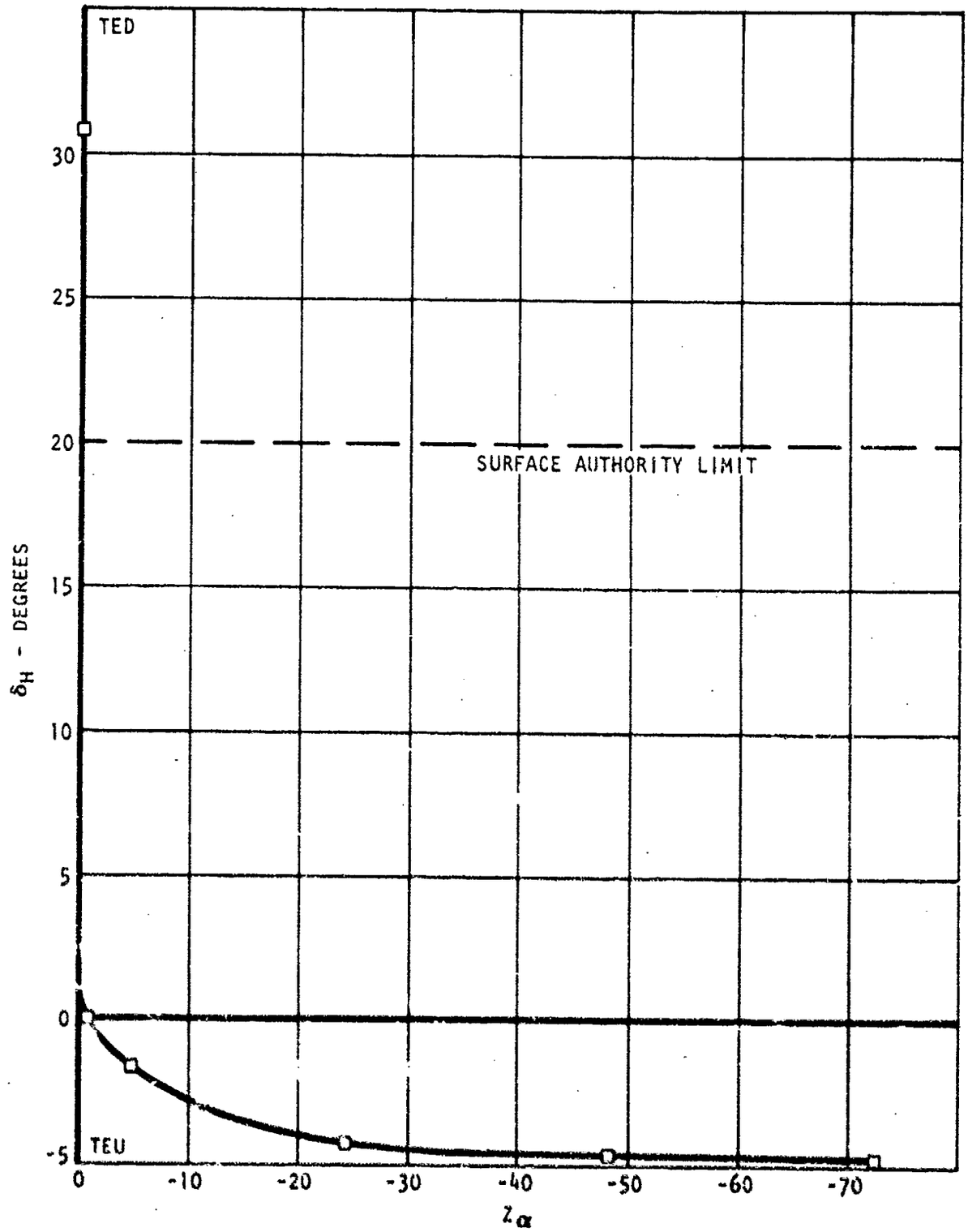

Figure V-3. Evaluation of Z_α Variation on Aircraft Capability to Trim with Horizontal Stabilizer.

additional trim would amount to approximately 9 degrees of elevator since this is roughly 10 percent more effective than the horizontal stabilizer. The effect or reducing $M_{\delta H}$ is presented in Figure V-2, and shows that for the baseline flight condition the minimum $M_{\delta H}$ which will provide acceptable trim is 0.25 times the baseline value.

If coefficient variations become excessively large to warrant some additional trim capability from the elevators these trims can be added to the pitching moment and normal force equations.

$$\frac{W \cos \theta_T}{T_{pe}} = NZOT + (NZAT)\alpha_T + (NZDHT)\delta_{H_T} + (NZDET)\delta_{e_T} \qquad \text{(AV-5)}$$

$$0 = MOT + (MAT)\alpha_T + (MDHT)\delta_{H_T} + (MDET)\delta_{e_T} \qquad \text{(AV-6)}$$

If it is assumed δ_{H_T} is equal to full surface deflection then MDHT and MAT can be varied to determine limits on these coefficients with additional elevator trim. Solving for δ_{e_T} and α_T the following equations are obtained:

$$\delta_{e_T} = \frac{-NZAT(MOT + MDHT\,\delta_{H_T}) - MAT\left(\frac{W}{T_{pe}} - NZOT - NZDHT\,\delta_{H_T}\right)}{NZAT(MDET) - MAT(NZDET)} \qquad \text{(AV-7)}$$

$$\alpha_T = \frac{MDET\left(\frac{W}{T_{pe}} - NZOT - NZDHT\,\delta_{H_T}\right) + NZDET(MOT + MDHT\,\delta_{H_T})}{NZAT(MDET) - MAT(NZDET)} \qquad \text{(AV-8)}$$

Table V-III summarizes the results of varying $M_{\delta H}$ and MAT in equation AV-7. Figure V-4 shows the results for M_α graphically. These data show that using 50 percent of available elevator control power would permit trimming the baseline aircraft with an $M_\alpha = -2.8$.

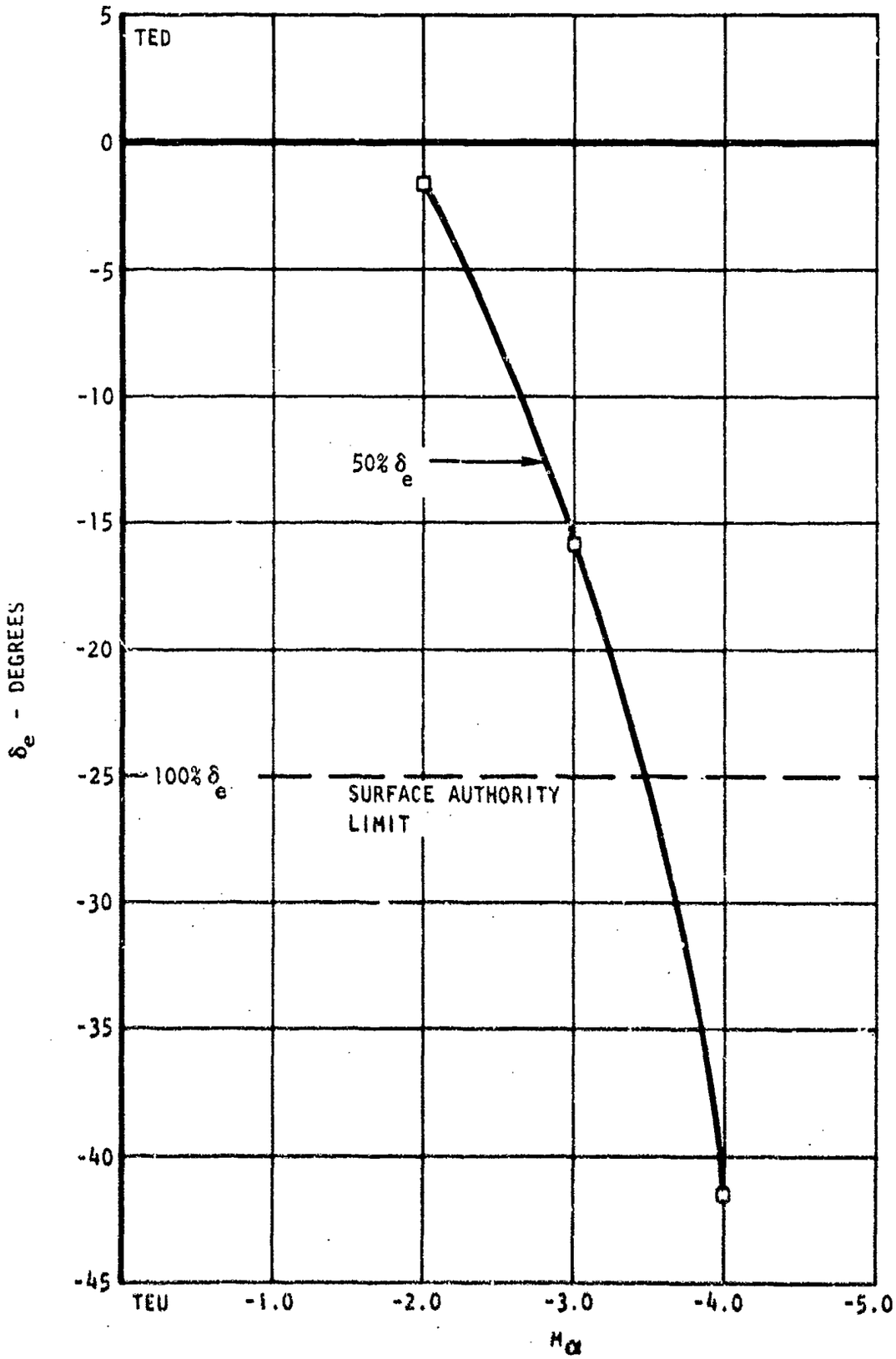

Figure V-4. Evaluation of M_α Variation on Aircraft Capability to Trim with Full Horizontal Stabilizer and Varying Elevator.

REFERENCES

1. MIL-F-83300, "Military Specification Flying Qualities of Piloted V/STOL Aircraft", dated 31 December 1970

2. MIL-F-8785B, "Military Specification Flying Qualities of Piloted Airplanes", dated 7 August 1969

3. V. Okumoto, NA-72-943, "MST Parameter Variation Studies - Time Histories", North American Rockwell Corporation, dated November 1972

4. D. J. Renselaer and R. Kelly, NA-71-1105, "Aerodynamic Design Compendium for Externally Blown Flaps", North American Rockwell Corporation, dated December 1971

5. BuAero Report AE-61-4, "Fundamentals of Design of Piloted Aircraft Flight Control Systems", Vol. II, dated February 1953

(The reverse of this page is blank)