AD-766 644

STOL TACTICAL AIRCRAFT INVESTIGATION. VOLUME VI. AIR CUSHION LANDING SYSTEM STUDY

Lloyd H. Gardner, et al

Boeing Aerospace Company

Prepared for:

Air Force Flight Dynamics Laboratory

May 1973

DISTRIBUTED BY:

NTIS

National Technical Information Service
U. S. DEPARTMENT OF COMMERCE
5285 Port Royal Road, Springfield Va. 22151

AFFDL-TR-73-19
Volume VI

AD 766644

STOL TACTICAL AIRCRAFT INVESTIGATION

Volume VI

Air Cushion Landing System Study

Lloyd H. Gardner
Charles J. Pizzichemi
Peter Milns

THE BOEING COMPANY

DDC
RECEIVED
SEP 19 1973
C

Technical Report AFFDL-TR-73-19 – Volume VI

May, 1973

Reproduced by
NATIONAL TECHNICAL
INFORMATION SERVICE
US Department of Commerce
Springfield, VA. 22151

Approved for public release; distribution unlimited

Air Force Flight Dynamics Laboratory
Air Force Systems Command
Wright-Patterson Air Force Base, Ohio 45433

Unclassified

Security Classification

DOCUMENT CONTROL DATA - R&D

(Security classification of title, body of abstract and indexing annotation must be entered when the overall report is classified).

1. ORIGINATING ACTIVITY (Corporate author) The Boeing Company, Aerospace Group P. O. Box 3999 Seattle, Washington 98124	2a. REPORT SECURITY CLASSIFICATION Unclassified 2b. GROUP

3. REPORT TITLE

STOL TACTICAL AIRCRAFT INVESTIGATION - VOLUME VI
AIR CUSHION LANDING SYSTEM STUDY

4. DESCRIPTIVE NOTES (Types of report and inclusive dates)

Final Technical Report 8 June 1971 through 7 February 1972

5. AUTHORS (First name, middle initial, last name)

Lloyd H. Gardner
Charles J. Pizzichemi
Peter Milns

6. REPORT DATE	7a. TOTAL NO. OF PAGES	7b. NO. OF REFS
May 1973	~~95~~ 160	11

8a. CONTRACT OR GRANT NO. F33615-71-C-1757 b. Project No. 643A c. d.	9a. ORIGINATOR'S REPORT NUMBERS D180-14407-1 9b. OTHER REPORT NO(S) (Any other numbers that may be assigned this report) AFFDL TR-73-19, Volume # VI

10. DISTRIBUTION STATEMENT

Approved for public release; distribution unlimited

11. SUPPLEMENTARY NOTES	12. SPONSORING MILITARY ACTIVITY Air Force Flight Dynamics Laboratory Wright Patterson AFB, Ohio 45433

13. ABSTRACT

Analyses and design studies have been conducted to determine the characteristics of an Air Cushion Landing System (ACLS) as it would be applied to an Advanced Medium STOL Transport (AMST) equipped with mechanical flaps and a vectored thrust powered lift system. It was determined that an ACLS would be feasible on an AMST type airplane, but requires a special housing arrangement which broadens the ACLS footprint area when it is deployed. Furthermore, special provisions are needed for ground handling and parking. Because it eliminates some of the concentrated loads associated with conventional landing gear, and is easily faired for low drag when retracted, the ACLS would permit a noticeable reduction in aircraft empty weight for a given mission requirement, if structural provisions for conventional landing gear are not included in the airframe. Substantial uncertainties remain unresolved, especially with respect to aircraft/air cushion landing dynamics and spray/debris effects.

FORM DD 1 NOV 65 1473
D1 4802 1030 ORIG. 3/71
PART 1 OF 3

Unclassified

Security Classification

Unclassified
Security Classification

14. KEY WORDS	LINK A ROLE	LINK A WT	LINK B ROLE	LINK B WT	LINK C ROLE	LINK C 2T
Air Cushion						
Landing Gear						
Ground Effect						
Surface Effect						

DD FORM 1 NOV 65 1473
D1 4802 1030 ORIG. 3/71
PART 2 OF 3

☆U.S.Government Printing Office: 1973 — 758-425/37

Unclassified
Security Classification

ib

STOL TACTICAL AIRCRAFT INVESTIGATION

Volume VI

Air Cushion Landing System Study

Lloyd H. Gardner
Charles J. Pizzichemi
Peter Milns

Approved for public release; distribution unlimited

i.e.

FOREWORD

This report was prepared for the United States Air Force by The Boeing Company, Seattle, Washington in partial fulfillment of Contract F33615-71-C-1757, Project No. 643A. It is one of eight related documents covering the results of investigations of vectored-thrust and jet-flap powered lift technology, under the STOL Tactical Aircraft Investigation (STAI) Program sponsored by the Air Force Flight Dynamics Laboratory, Air Force Systems Command, Wright-Patterson Air Force Base, Ohio. The relation of this report to the others of this series is indicated below:

AFFDL TR-73-19	STOL TACTICAL AIRCRAFT INVESTIGATION	
Vol I	Configuration Definition: Medium STOL Transport with Vectored Thrust/Mechanical Flaps	
Vol II Part 1	Aerodynamic Technology: Design Compendium, Vectored Thrust/Mechanical Flaps	
Vol II Part 2	A Lifting Line Analysis Method for Jet-Flapped Wings	
Vol III	Takeoff and Landing Performance Ground Rules for Powered Lift STOL Transport Aircraft	
Vol IV	Analysis of Wind Tunnel Data: Vectored Thrust/Mechanical Flaps and Internally Blown Jet Flaps	
Vol V Part I	Flight Control Technology: System Analysis and Trade Studies for a Medium STOL Transport with Vectored Thrust/Mechanical Flaps	
Vol V Part II	Flight Control Technology: Piloted Simulation of a Medium STOL Transport with Vectored Thrust/Mechanical Flaps	
Vol VI	Air Cushion Landing System Study	This report

The work reported here was performed in the period 8 June 1971 through 7 February 1972 by the Aero/Propulsion Staff of the Research and Engineering Division and by the Tactical Airlift Program, Aeronautical and Information Systems Division, both of the Aerospace Group, The Boeing Company. Mr. Franklyn J. Davenport served as Program Manager.

The authors are indebted to Mr. G.L. Hopkins, Dr. G.K.L. Kriechbaum, Mr. W.T. Cox, and Mr. D.M. Dolliver of The Boeing Company, Aerospace Group, for significant contributions to configuration development and analysis.

The Air Force Project Engineer for this investigation was Mr. Garland S. Oates, Air Force Flight Dynamics Laboratory, PTA, in association with Major John Vaughn, Air Force Flight Dynamics Laboratory, FEM.

This report was released within The Boeing Company as Document D180-14407-1, and submitted to the USAF in February, 1972.

This technical report has been reviewed and is approved.

E. J. Cross Jr., Lt. Col., USAF
Chief, Prototype Division
Air Force Flight Dynamics Laboratory

(iv blank)

ABSTRACT

Analyses and design studies have been conducted to determine the characteristics of an Air Cushion Landing System (ACLS) as it would be applied to an Advanced Medium STOL Transport (AMST) equipped with mechanical flaps and a vectored thrust powered lift system. It was determined that an ACLS would be feasible on an AMST type airplane, but requires a special housing arrangement which broadens the ACLS footprint area when it is deployed. Furthermore, special provisions are needed for ground handling and parking. Because it eliminates some of the concentrated loads associated with conventional landing gear, and is easily faired for low drag when retracted, the ACLS would permit a noticeable reduction in aircraft empty weight for a given mission requirement, if structural provisions for conventional landing gear are not included in the airframe. Substantial uncertainties remain unresolved, especially with respect to aircraft/air cushion landing dynamics, and spray/debris effects.

KEY WORDS

Air Cushion
Landing Gear
Ground Effect
Surface Effect

TABLE OF CONTENTS

		Page
I	INTRODUCTION	1
II	SUMMARY	3
III	STUDY GROUND RULES	7
IV	ACLS CONFIGURATION	13
	4.1 Trunk Configuration	13
	4.2 Air Supply System	14
	4.3 Airplane Modifications	25
	4.4 Parking, Towing, and Jacking Provisions	26
	4.5 Brakes	27
	4.6 ACLS Controls	27
V	ACLS vs CONVENTIONAL GEAR	35
	5.1 Overview	35
	5.2 Weights	35
	5.3 Cost	38
	5.4 Performance	39
	5.5 Structural Modifications	39
	5.6 Maintainability	40
	5.7 Reliability	42
	5.8 Ground Operations	42
	5.9 Mission Impact	47
VI	SUBSTANTIATING DATA	51
	6.1 Systems Analysis	51
	6.2 Aerodynamic Analysis	63
	6.3 Structural Analysis	73
REFERENCES		95

LIST OF ILLUSTRATIONS

Figure		Page
1	Baseline Airplane - Model 953-801	11
2	3 View - ACLS Configuration	15
3	Design Details - ACLS Configuration	17
4	Alternate Cushion Configurations	9
5	Alternate Air Supply Engine Locations	23
6	Alternate Parking Configurations	29
7	Dolly Support--Towing	31
8	ACLS Control System	33
9	Trade Study Summary	36
10	Landing System Maintenance Comparison	41
11	Landing System Reliability Comparison	43
12	Landing Field Capability	45
13	Overwater Drag	49
14	Landing Field Requirements	50
15	Estimated Fan Characteristics	53
16	Air Cushion Gap Height	54
17	Cushion Area Requirements	55
18	Airflow vs Gap Height(h)	56
19	Fan Horsepower Requirements	57
20	ACLS Brake Temperature - 1020 Steel	61
21	ACLS Brake Temperature - Rubber	62
22	High-Speed Drag Polar	65

LIST OF ILLUSTRATIONS

Figure		Page
23	Trimmed Low-Speed Drag Polars	65
24	Longitudinal Aerodynamic Characteristics	66
25	Lateral/Directional Stability	67
26	Takeoff Performance	68
27	Deviation of Heading Angle Requirement	69
28	Airplane Heading In Crosswind	70
29	Wheeled Sideforce Producer Concept	71
30	Drop Test Specimen	74
31	Drop Test Time History	75
32	Incremental Load Factors from ACLS Model Drop Tests	77
33	Trunk Energy Absorption	78
34	Dimension of (1-Cosine) Bumps	80
35	Trunk Shapes	81
36	Trunk Shapes Used in Stiffness Calculation	83
37	Variation of Static Cushion Force with Pitch Angle	84
38	Variation of Static Cushion Force with Roll Angle	85
39	Variation of Static Cushion Moment with Pitch Angle	87
40	Variation of Static Cushion Moment with Roll Angle	89
41	2g Pitch Stability	90
42	2g Roll Stability	91
43	Taxi Analysis Equations of Motion	92

LIST OF ILLUSTRATIONS

Figure		Page
44	Taxi Behavior of ACLS on MST	93
45	Effect of Trunk Liftoff on Taxi Time History	94

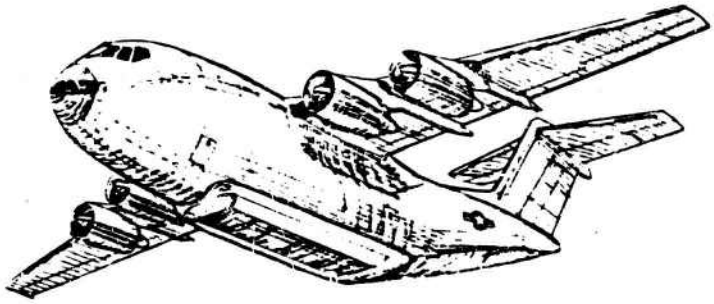

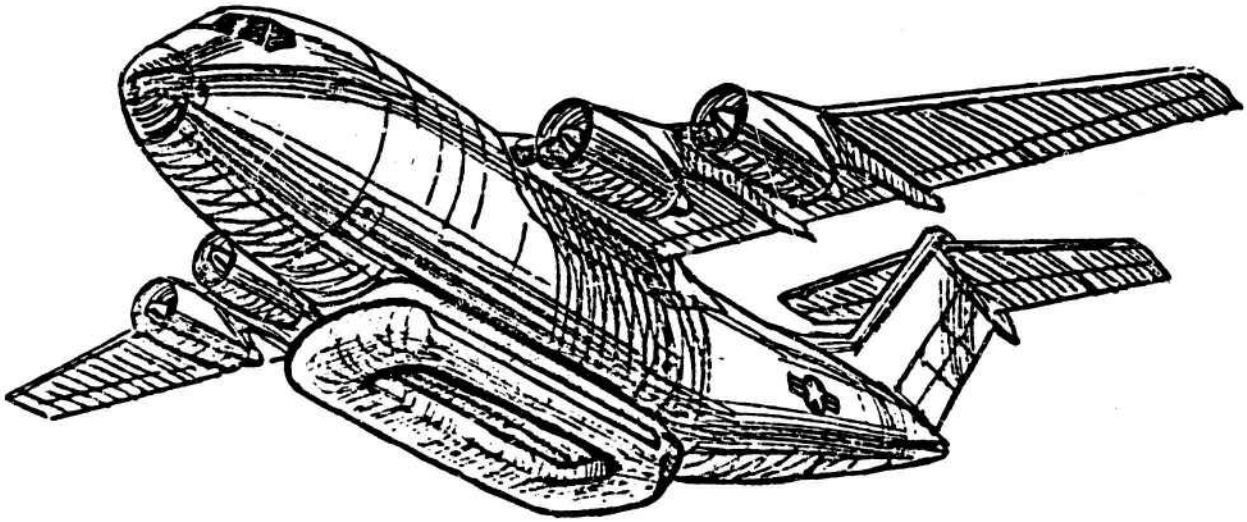

LIST OF SYMBOLS

A	Air cushion area, sq ft
C_D	Drag coefficient
C_L	Lift coefficient
C_m	Pitching moment coefficient
C_μ	Boundary layer control momentum coefficient
h	Gap height, in
P_c	Cushion air pressure, lbs/sq ft
Q	Brake heat flow per unit area, (BTU/sec)/sq ft
S	Cushion perimeter, ft
α	Angle of attack, deg
γ	Ratio of specific heats
δ	Atmospheric pressure ratio
θ	Atmospheric temperature ratio
μ	Friction coefficient
ϕ	Trunk roll angle, deg

ABBREVIATIONS

ACLS	Air cushion landing system
CBR	California bearing ratio

SECTION I

INTRODUCTION

1.1 THE TACTICAL AIRLIFT TECHNOLOGY ADP

The U.S. Air Force's need for modernization of its Tactical Airlift capability has led to establishment of the Tactical Airlift Technology Advanced Development Program (TAT-ADP). This program will contribute to the technology base for development of an Advanced Medium STOL Transport (AMST).

The AMST must be capable of handling substantial payloads and using airfields considerably shorter than those required by larger tactical transports now in the Air Force inventory. If this short field requirement is to be met without unduly compromising aircraft speed, economy, and ride quality, an advanced-technology powered-lift concept will be required.

The STOL Tactical Aircraft Investigation (STOL-TAI) is a major part of the TAT-ADP, and comprises studies of the aerodynamics and flight control technology of powered lift systems under consideration for use on the MST. Under the STOL-TAI, the Boeing Company has been awarded Contract No. F33615-71-C-1757 by the USAF Flight Dynamics Laboratory to conduct investigations of the technology of the vectored-thrust powered lift and internally blown jet flap concepts. These investigations include:

1) Aerodynamic analysis and wind tunnel testing.

2) Configuration studies.

3) Control system design, analysis, and simulation.

4) Technical trade studies of conventional landing gear and the air cushion landing system (ACLS) to determine the utility of the ACLS in application to the AMST requirements.

This document presents the results of the technical trade studies under item 4 above.

1.2 AIR CUSHION LANDING SYSTEM

The compromises that a conventional landing gear forces into the design of an aircraft are numerous. The use of an air cushion in place of the conventional wheel-type gear offers some definite advantages. At the same time, the air cushion landing system introduces problems

for which solutions are not apparent. In such a situation it is up to the engineer to explore the applications so that he may best take advantage of the desirable features while overcoming the new problems involved.

The fundamental concept of the ACLS is based on air bearings, which have evolved from a novelty in machine design to an accepted answer for many applications. Ground effect machines are becoming more numerous, and unique applications are being studied. The use of an air cushion system for airplanes where landing impact and aerodynamic shapes influence the configuration has been under study for several years. In 1968 this led to the installation and flight test of an air cushion system on the Lake LA-4 aircraft. The LA-4 program developed sufficient interest and confidence that a joint U.S.-Canadian program of modifying a Buffalo CC-115 airplane with an ACLS was undertaken in 1971. The first flight of the CC-115 is now scheduled for early 1973.

The Naval Air Systems Command under the sponsorship of the Advanced Research Projects Agency funded studies by Boeing, Bell, Sandaire, and Goodyear to explore the use of ACLS on Navy fighters. Boeing's work is reported in Reference 1. No firm decision has been made to proceed with an ACLS modification of a Navy airplane, but work has continued at the Naval Air Development Center and at the Naval Ship Research and Development Center on some facets of the program. Also, Bell and Goodyear have built scale model ACLS test specimens for simulated touchdown tests on the Landing Loads Track at NASA Langley. In addition, a twin pod ACLS test speciman is currently being built at Boeing also for testing at Langley.

In another area, attention has recently been given to use of air cushion landing systems on drones and remote-piloted aircraft. Proposals were recently solicited by the Air Force Flight Dynamics Lab for the conceptual design of an air cushion system to replace the landing skid on an Australian Jindivik drone. This would provide a low cost vehicle for additional ACLS evaluation and could eventually lead to the use of an air cushion on this type of vehicle.

Apparently then, the technology of the ACLS is rapidly maturing and its relevance to tactical airlift is obvious. Inclusion of this work in the TAI is therefore timely and appropriate.

SECTION II

SUMMARY

2.0 GENERAL

A Medium STOL Transport (MST) with an Air Cushion Landing System (ACLS) provides additional mission flexibility and possibly reduced total program cost, but with certain ground handling inconveniences and some unanswered technical feasibility concerns. The ability to land on unimproved and snow and water covered fields greatly widens the military transport capability of the aircraft. Additional effort is needed to determine the operational value of this capability.

This study indicates that an ACLS transport aircraft has a lower gross weight than a wheeled gear aircraft. A reduction, from the baseline aircraft*, of 5640 pounds and 350 feet in takeoff distance (due to the elimination of rolling friction) was indicated by the study. Since under STAI rules the aircraft is designed by takeoff distance, resizing of the aircraft is permissible and a further reduction in gross weight is possible. A reduction of 10,080 pounds can be achieved by resizing the aircraft and designing specifically for an ACLS. The resulting savings in airplane cost and operating fuel costs, even when compensated by higher ACLS development and recurring costs, is estimated at $64 million for a 200-airplane fleet over a 10-year period.

The foregoing advantages are somewhat balanced by certain unsolved technical problems which continue to exist. Means for providing airplane directional control during landing and takeoff "roll" and during taxiing under operational conditions have not been satisfactorily solved. Also, unknowns exist in understanding the air cushion (trunk) dynamics associated with touchdown and landing "roll." Brakes and braking capability must be further evaluated.

The ACLS airplane configuration developed during this study and the baseline airplane to which it was compared are shown in Figures 1 and 2 (pages 11 and 15). The general appearance of the baseline airplane has been retained. The ACLS airplane has the same circular pressure shell, requires no changes in aerodynamic control surfaces, has the same cargo door location, and accommodates the same cargo box size. The air cushion has an area (within the line of trunk tangency) of 660 feet^2 and has a conventional trunk configuration. The two PT-6 engines located in the unpressurized area under the cabin floor supply air to the trunk to maintain a cushion pressure of 200 pounds/foot^2 at the design gross weight of 132,350 pounds while maintaining an average air gap (or trunk clearance) of 1/2 inch. The trunk is attached to a fairing on the bottom of the airplane and to doors which cover the folded trunk when in normal flight. The doors provide a structural support to give a 20 foot tread width which is roughly equal to that of the baseline airplane.

* The "baseline" aircraft is discussed in detail in Appendix A of Ref. 2.

With the trunk and brake pads covered by the fairing and doors, the airplane presents a cleaner configuration than the baseline airplane, which requires large landing gear housings. Parking of the airplane is accomplished by a three-point support system which functions as airplane jack points and as supports to stabilize the cargo door sill for cargo loading. The supports are extended remotely by the pilot before shutting down the ACLS and can be fitted with dolly wheels for towing.

In addition to the reverse thrust provided by the engines, braking is provided by brake pads located on the aft portion of the trunk and controlled by the brake pedals. These brakes, when used in conjunction with engine thrust, provide airplane directional control during ground "roll" and taxiing.

The ACLS configuration is itself a result of several trade studies. Three different approaches to air trunk design were compared from such aspects as weight, drag, complexity, cost, and convenience before arriving at the final cushion configuration. Similar trades were made for two ACLS air supply engine locations and three airplane parking concepts, including multi-cell bladders integral with the air cushion as planned for the Buffalo ACLS airplane. The advantages and disadvantages of these alternatives are presented in the body of the report.

Once the ACLS configuration was finalized, a step-by-step comparison was made with the baseline airplane. Figure 9 (page 36) presents the results of this comparison, some details of which have previously been summarized. Benefits are obvious, but the real significance in dollars and cents, in the need for fewer airplanes, in the replacement of surface transportation, in reduced surface preparation, etc., requires a comprehensive study in itself. Exploration of this area could well be the most urgent of the questions relating to an AMST with an ACLS.

2.1 CONCLUSIONS

1. Fitting an ACLS to the MST airplane does not require a significant change to the structural arrangement or appearance of the airplane except for removal of the landing gear and redesign of the associated structure.

2. Even on a transport airplane, the planform area of the body is not adequate to give a low footprint pressure without the addition of lengthwise doors or other features to widen the usable area.

3. In a new airplane, the weight of the wheel gear (main and nose) and its backup structure appears to be greater than the weight of an ACLS.

4. Landing gear housings produce substantially greater drag than the ACLS installation.

5. Lengthwise doors serve to reduce drag by covering the trunk and brakes, and also provide a necessary increase in tread width to insure lateral stability on the ground, and protect the trunk in a high equivalent airspeed environment.

6. The lower OWE (Item 3) and reduced drag (Item 4) result in a significant reduction in gross weight.

7. The directional control problem during ground "roll" and taxiing under operational conditions has not been adequately solved and needs additional attention.

8. The braking system, which will probably be tied in with directional control and steering, has not been sufficiently studied or demonstrated. This includes braking and steering on water, snow, dirt, and sand.

9. Provisions for parking the airplane that allow for convenient maintenance and repositioning are not an inherent part of the ACLS.

10. Items 7, 8, and 9 appear best to be solved by wheels of some sort.

11. Inadequate information is available on the dynamics of the air cushion (and the fan) during high descent impact, ground "roll," lateral disturbances, and rotation during takeoff and landing.

12. The ACLS air supply system should be studied from the standpoint of its integration with the airplane APU (used for ground power, checkout, etc.) and boundary layer control (BLC) requirements.

13. The effect of ACLS generated water spray and debris on an airplane such as the MST needs to be further evaluated and means for minimizing any detrimental effects need to be developed.

14. The increased mission flexibility of an ACLS airplane can be significant but requires further evaluation and analysis.

SECTION III

STUDY GROUND RULES

3.0 The study was conducted to determine the advantages and problems associated with using an ACLS instead of a conventional landing gear for a baseline configuration. Specifically, the following items were assessed:

1. Structural arrangement.

2. Auxiliary power requirements.

3. Ground handling characteristics (towing, taxiing, parking).

4. In-flight handling characteristics (cushion inflated and deflated).

5. Airplane mission capability (drag, range, payload, takeoff and landing field length).

6. Operational life.

7. Weight

8. Cost.

To make this technical trade it was necessary to start with an existing MST design which had been designed to meet generally accepted AMST mission requirements. Some of these mission (and airplane) requirements and characteristics are tabulated below. A more complete mission and airplane description is found in Ref. 2, Appendix A.

Maximum Gross Weight - CTOL	194,000 pounds
Design Gross Weight	145,440 pounds
Design STOL Weight	132,350 pounds
Operating Empty Weight	88,500 pounds
Approximate Touchdown Speed	90 knots

Flotation	200 passes at CBR6
	limited capability at lower CBR's
Deck Height	54 inches when parked

In addition to meeting the foregoing requirements, the following additional requirements were imposed for the ACLS aircraft:

1. Operation to and from various airfields

   (a) Conventional hard surfaced runways

   (b) Unimproved fields - loose dirt and sand

   (c) Water and marshes (up to 3 foot waves)

   (d) Snow and ice

   (e) Obstacle strewn fields - 18 inch transverse ditches

   - abrupt steps--18 inches high

   - boulders, logs, and stumps--18 inches high

2. Cushion trunk should be easily maintained

   (a) Trunk should sustain slashes or punctures without progression of failure or significant performance degradation.

   (b) Brakes equivalent to conventional brakes--energy absorption and stopping distance. Pads suitable for 25 or more normal stops and readily replaceable.

   (c) Cushion must be suitable for operation at environmental temperatures of -65° to +125°F, must be easily retracted and extended and suitable for 500 landings without replacement. (A capability to replace that portion of the cushion subject to abrasion is an adequate alternative to their life requirement.)

3. The airplane shall be suitable for water operation

   (a) Capable of accelerating through hump speed.

Preceding page blank

(b) Need not have static buoyancy without emergency flotation bags.

4. Provide an average trunk-to-ground clearance of 1/2 inch at design conditions.

5. Provide adequate provisions for normal failures and combat damage.

6. Locate air inlets to provide maximum freedom from ingestion of water spray and debris.

7. Fleet size consists of 200 aircraft.

8. The baseline aircraft to which the ACLS configuration is compared is as shown on Figure 1 and designated Model 953-801.

This is also the baseline for current high lift and flight control studies on the STOL Tactical Aircraft Investigation (TAI) contract of which this study is a part. As a result, data on performance, weights, etc. were available from which to make comparisons with an ACLS airplane. No comparison has been attempted with other potential MST configurations.

Preceding page blank

MODEL 953-901

AERODYNAMIC DATA

		WING	HORIZ. TAIL	VERT. TAIL
AREA	FT^2	1569.50	422.30	327.38
SPAN	FT	112.76	41.10	18.09
ASPECT RATIO		8.0	4.0	1.0
SWEEP, C/4		10°	10°	35°
DIHEDRAL		0°	-4°	—
INCIDENCE		0°	+4°,-15°	—
TAPER RATIO		.3	.5	.8
THICKNESS RATIO	BODY SIDE	.150	.13	.13
	.55 b/2	.132	.13	.13
	TIP	.132	.13	.13
MAC	FT	15.46	10.65	18.17
VOLUME COEFFICIENT		—	1.10	0.10

POWER PLANT
4 BY PASS 5.25 TURBOFANS WITH THRUST VECTORING 17,740 LB THRUST

LANDING GEAR
MAIN 8 42x15.0-16 TIRES
NOSE 2 34x12.0-12 TIRES

CARGO COMPARTMENT
144"W 144"/148"H 540"L

WEIGHTS

DESIGN GROSS	145,440	LB	ASSAULT MISSION
DESIGN STOL	132,350	LB	ASSAULT MISSION
STOL PAYLOAD		LB	ASSAULT MISSION
O.E.W.	88,500	LB	
DESIGN GROSS	194,000	LB	CTOL MISSION
MAX. PAYLOAD		LB	CTOL MISSION

FUEL
TANK NO. 1
TANK NO. 2
TANK NO. 3
SUBTOT
CENTER T.
TOTAL

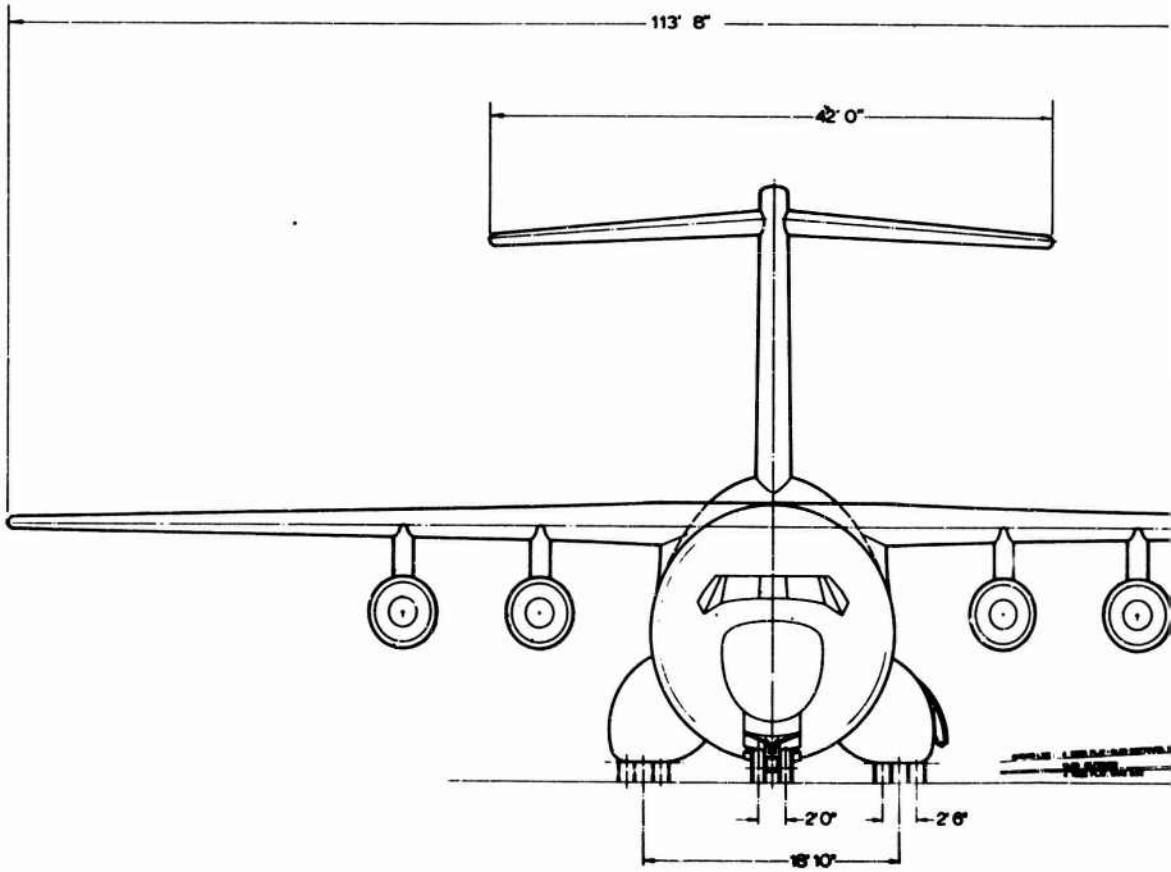

Preceding page blank

FUEL		
TANK NO 1 & 6	14,180	LB
TANK NO 2 & 5	13,760	LB
TANK NO 3 & 4	17,170	LB
SUBTOTAL	45,110	LB
CENTER TANK	19,130	LB
TOTAL	64,240	LB

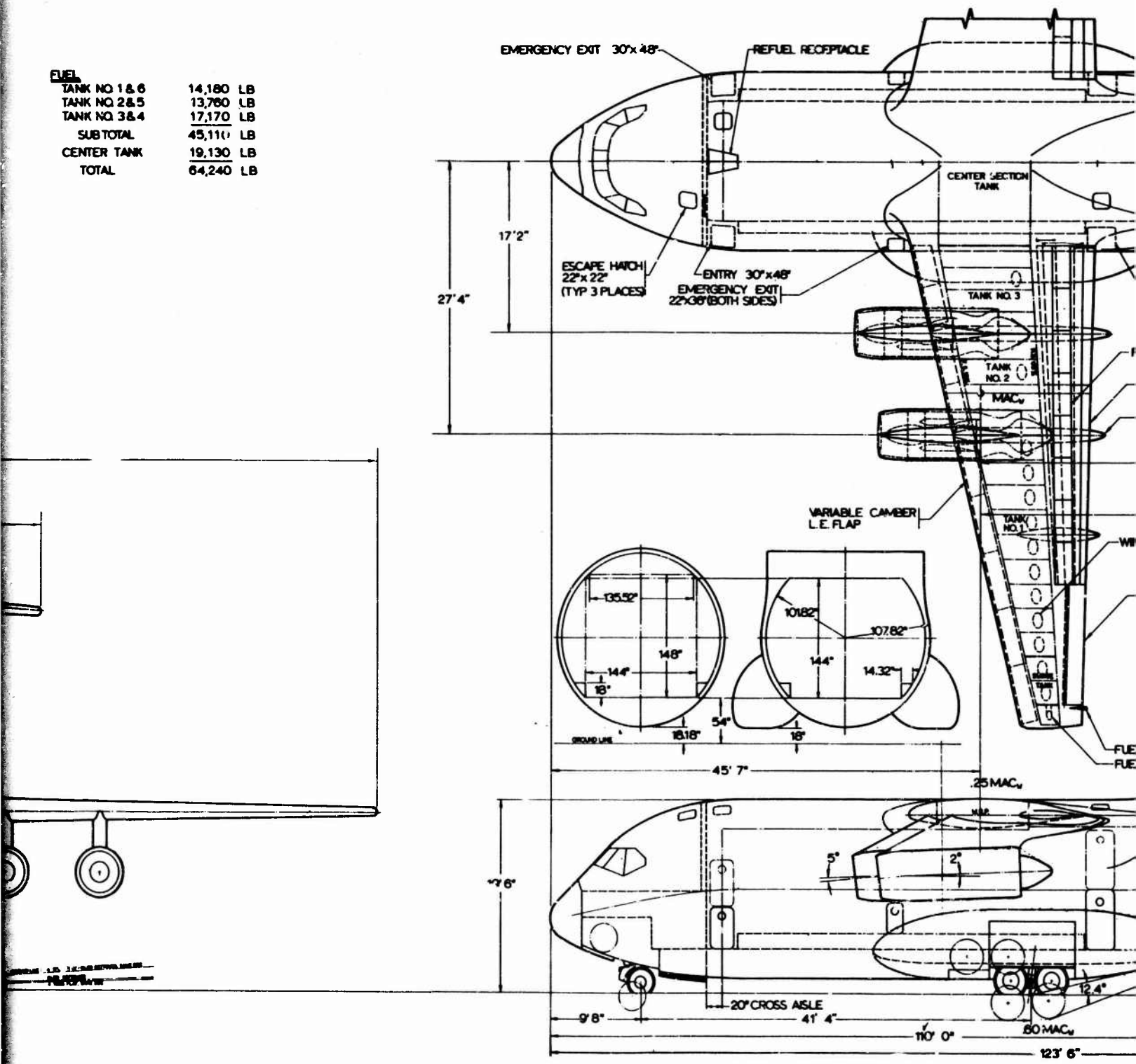

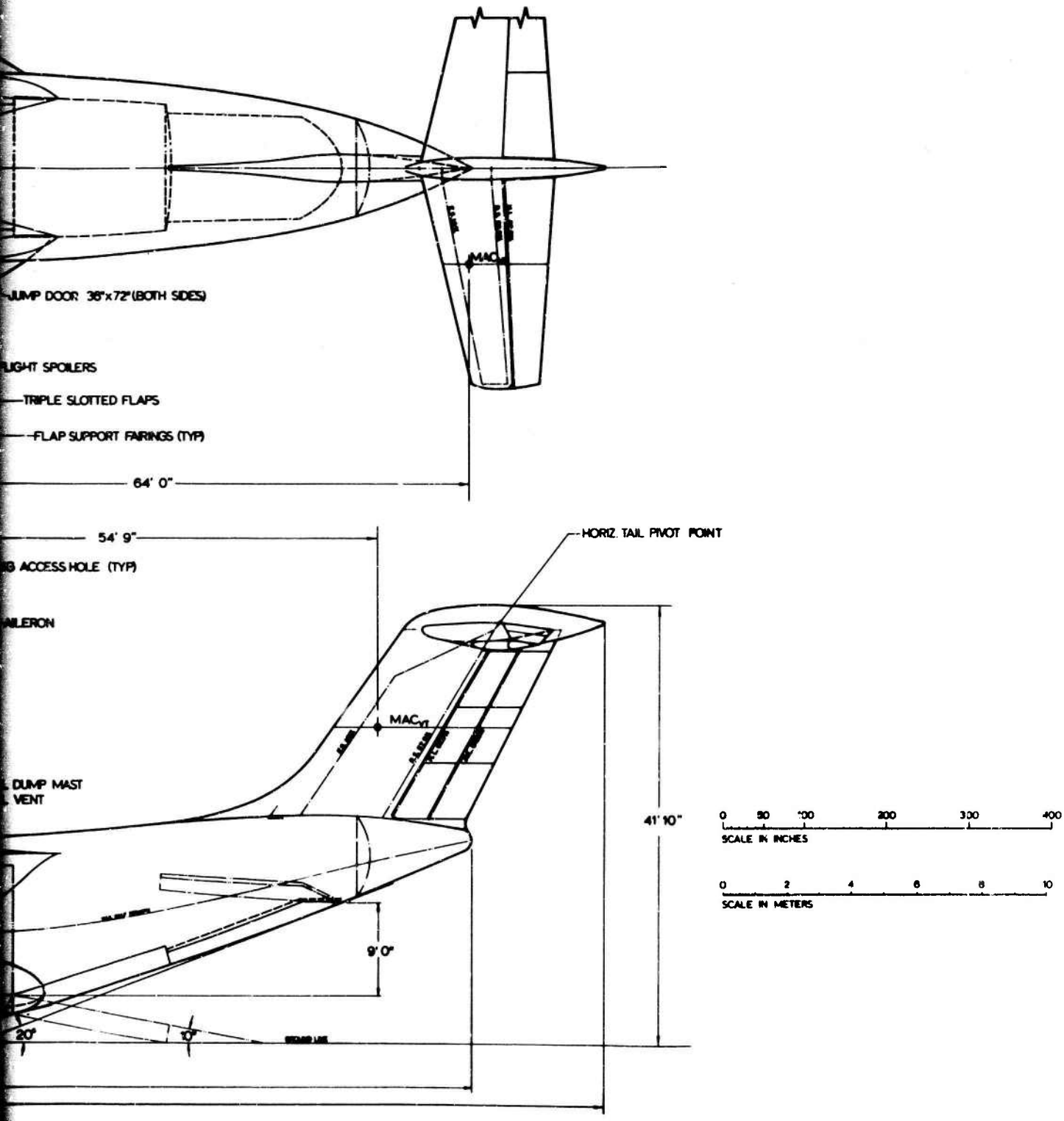

Figure 1: BASELINE AIRPLANE MODEL 953-801

SECTION IV

ACLS CONFIGURATION

4.0 GENERAL

For the MST, the dominant requirement influencing the shape of the airplane is a fixed cargo box size of 12' x 12' x 45'. This requirement coupled with the structural advantage of a circular pressure shell established the body cross section of the baseline airplane. The addition of a crew compartment, the cargo door, and aft body closure and empennage established the length and shape of the airplane. Since the ACLS configuration must respect the same requirements, no significant changes to the body contours and airplane arrangement were required. As a result, the impact of an ACLS on weight, drag, and cost could be determined by estimating differences rather than evaluating two total air frames.

The paragraphs that follow describe the various trades that were made in the process of arriving at an appropriate ACLS configuration and the rationale followed in making the selection. Trades were made of several cushion configurations, two engine locations, and several parking arrangements. The configuration that was selected for further study is shown on Figures 2 and 3.

4.1 TRUNK CONFIGURATION

An essentially conventional approach was taken to the trunk design and arrangement. No attempt was made to evolve an airmat, convoluted fingers, or other novel type of air cushion. Although such trade studies would be appropriate for a detailed design effort, the impact on weight, cost, and complexity variations are sufficiently small that the overall objectives of this contract would not have been enhanced.

As for the shape, size, and location of the cushion, several factors were considered. A large area was needed to keep cushion pressure low, thus reducing the debris generation. However, the shape and area of the underside of the airplane limited the useable space to 600-700 feet^2. Even this area required some type of cushion-length doors to extend the lateral dimensions of the cushion. The useable length fore and aft was determined by location of the cargo door and a desire to balance the cushion area fore and aft of the airplane c. g. Furthermore, a long cushion restricts rotation and touchdown angle of attack. A capability to reach 6-8° angle of attack without loss of cushion pressure is necessary for this aircraft.

Lateral (roll) stability on the ground requires a wide tread. This led to a search for ways to accommodate a wider cushion than the base-

Preceding page blank

line configuration provided. Two concepts were identified (Figure 4) for comparison with the more conventional elastic trunk configurations. Although the doors and folding of the trunk material add weight and complexity, the need for better roll stability (without outriggers) seems essential. Furthermore, the addition of doors eliminates the drag associated with an externally exposed cushion and prevents flutter of the material.

No extensive comparison was made of trunk materials. Some variation in weight between elastic and nonelastic trunks would be expected. Costs of development would also vary. Comparing, it appears that there is no great advantage of one over the other and that each could be made to work. Experience being obtained in current ACLS programs should be assessed prior to a detailed design of a cushion configuration.

After duly considering the preceding factors and others which are identified in the comparison chart of Figure 4, the decision to use a side door configuration for the ACLS design was made. The procedures and analysis used in determining trunk height, roll stiffness and dynamic performance are presented in Section 6.3.

4.2 AIR SUPPLY SYSTEM

The air flow requirements of 136 pounds/second at 475 psfg (3.3 psig) are adequate to maintain a 1/2 inch gap around the periphery of the trunk at a design STOL weight of 132,550 pounds. This average gap height of 1/2 inch is rather arbitrary but is kept purposely low to keep air supply power down. Use of two engines provides redundancy although with one engine the gap would be reduced. This might preclude landing on certain types of irregular terrain that would be satisfactory with two engines. At higher gross weights the gap is also reduced. See Figure 16 and the calculations in Section 6.1.

Engine and Fan Selection--A check of the performance of the PT-6 engines used on the Buffalo C-115 ACLS modifications showed adequate capacity to meet the flow requirements at the cushion pressure conditions. The engine has been used for a variety of auxiliary power uses (it is used as an APU for the L-1011) and seemed appropriate for this application.

The fan is assumed to be a single stage axial fan driven through a clutch and gear box from the PT-6. The large pressure variations in trunk pressure during touchdown and the debris situation require a carefully designed and durable fan. Although little time was devoted to

WING SPAN	113' 8"
WING AREA	1589.50 FT^2
OVERALL LENGTH	123' 6"
TAIL HEIGHT	45' 4"
DESIGN STOL WEIGHT	132,350 LB
DESIGN GROSS	194,000 LB
AIR CUSHION AREA	660 FT^2

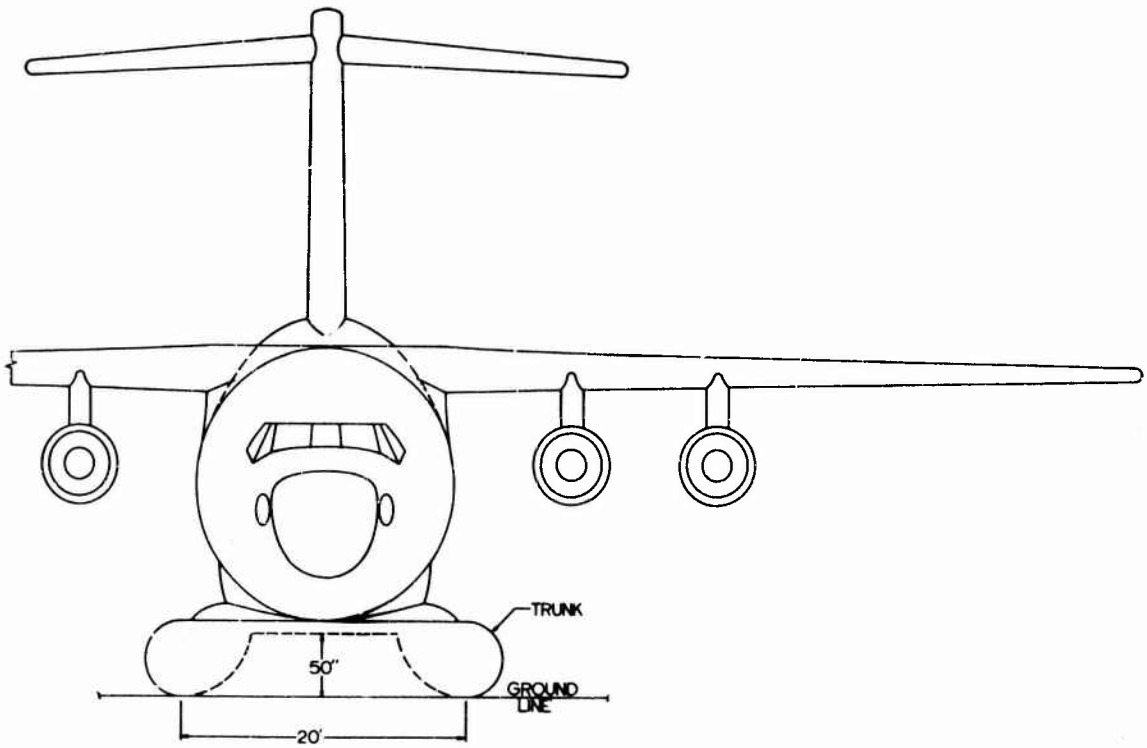

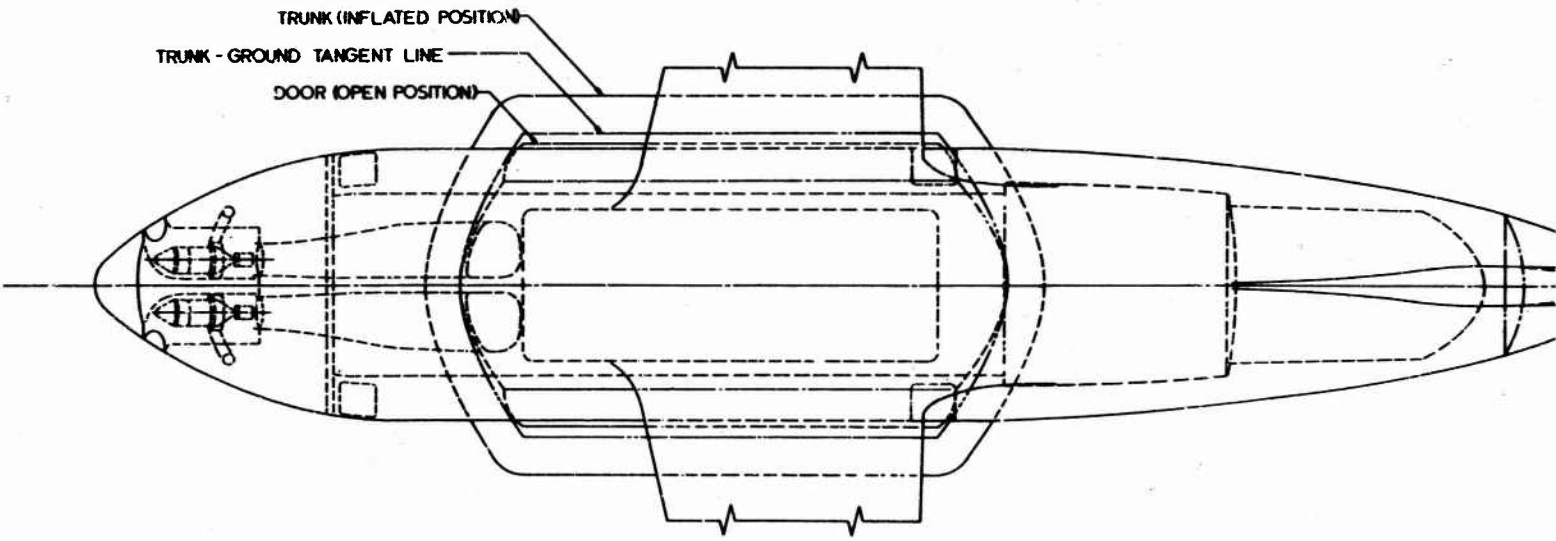
TRUNK (INFLATED POSITION)
TRUNK - GROUND TANGENT LINE
DOOR (OPEN POSITION)

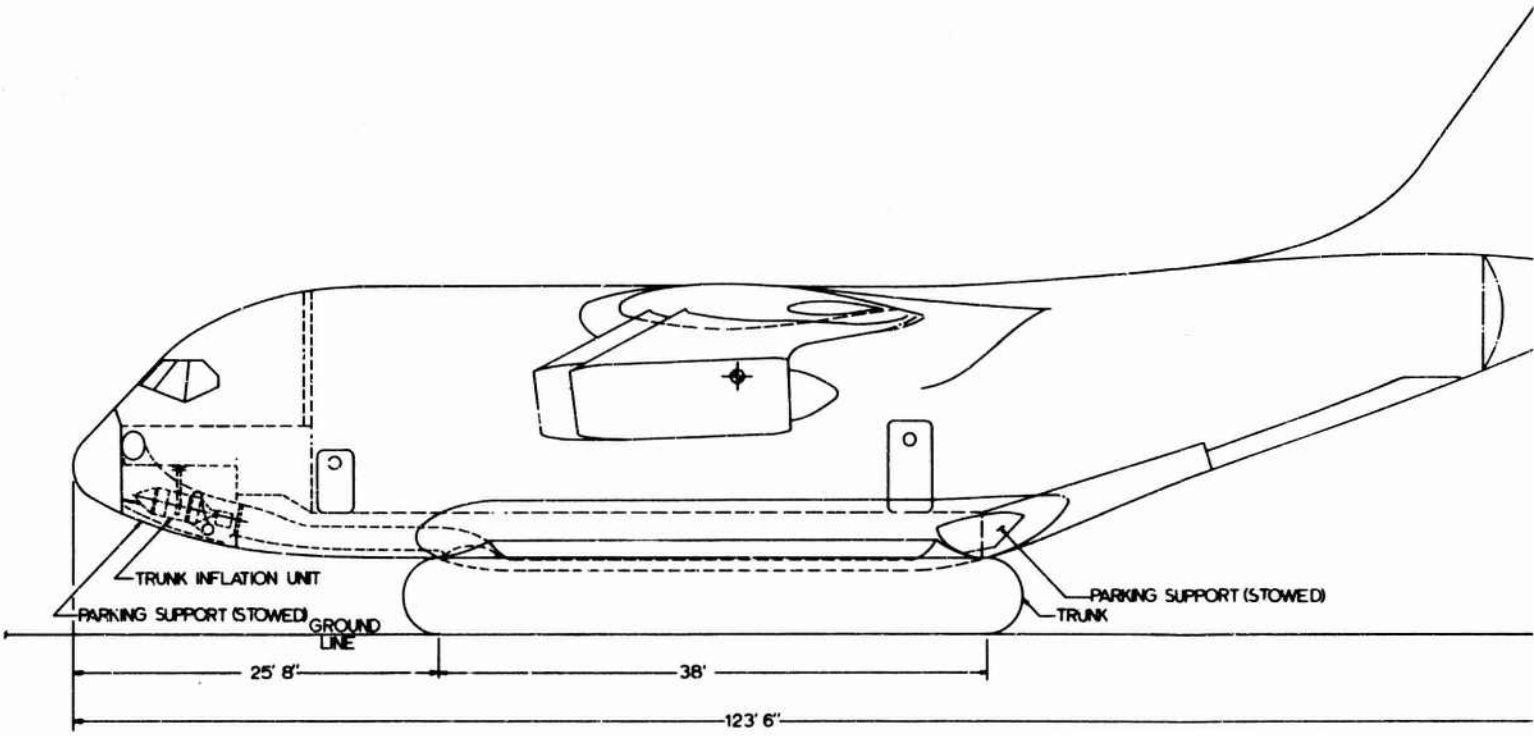
TRUNK INFLATION UNIT
PARKING SUPPORT (STOWED)
GROUND LINE
PARKING SUPPORT (STOWED)
TRUNK
25' 8"
38'
123' 6"

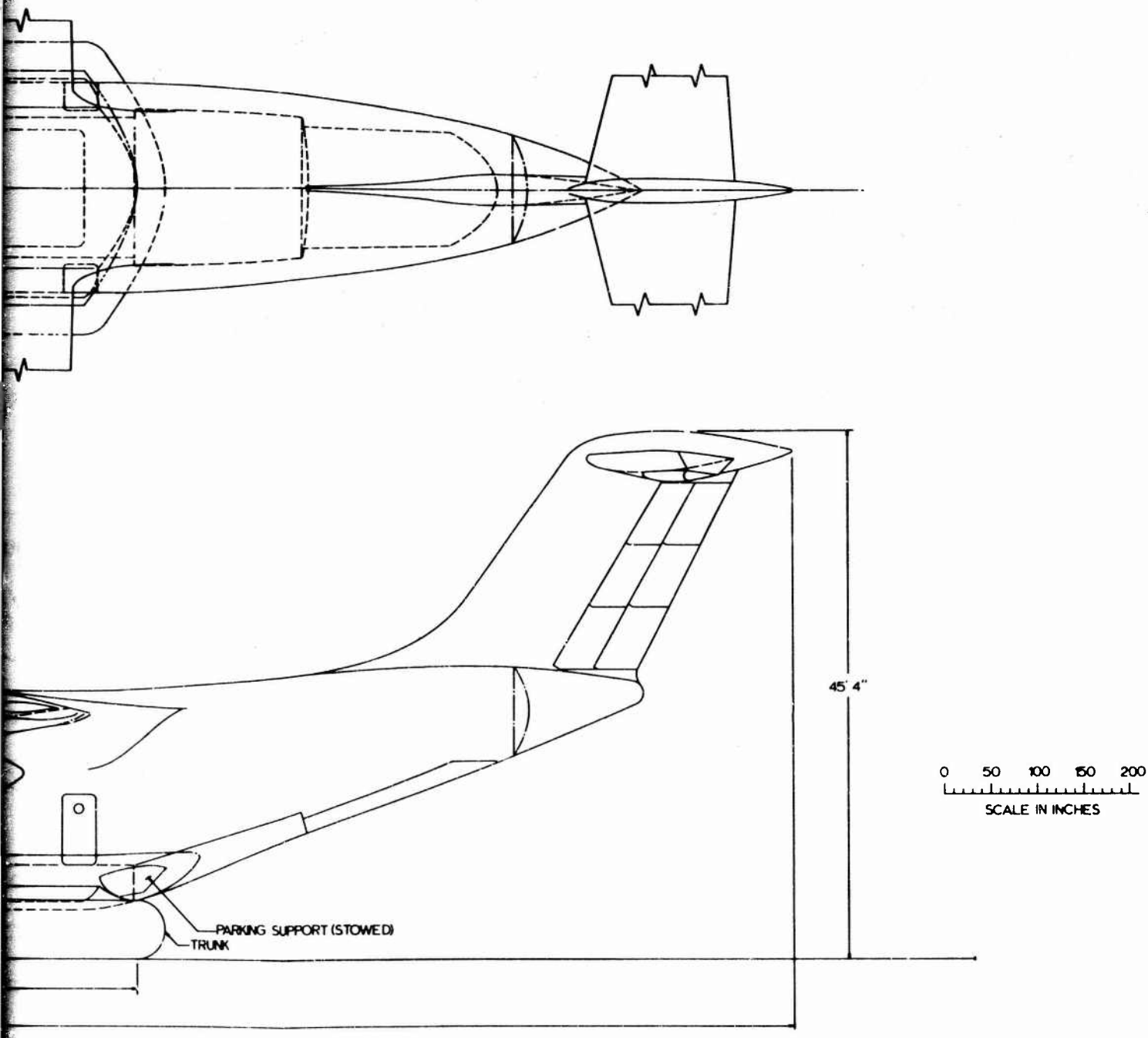

Figure 2: 3 VIEW - ACLS CONFIGURATION

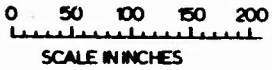

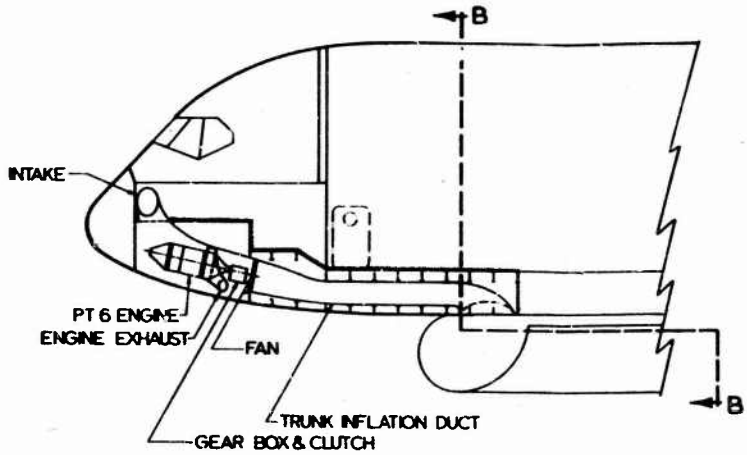

INFLATION SYSTEM

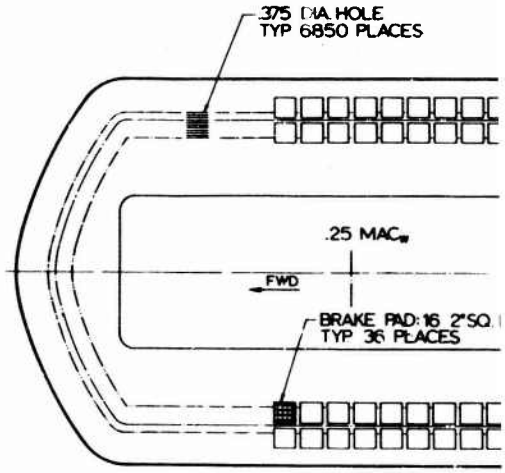

BOTTOM VIEW- BRAKE PAD AN
AIR CUSHION HOLE ARRANG

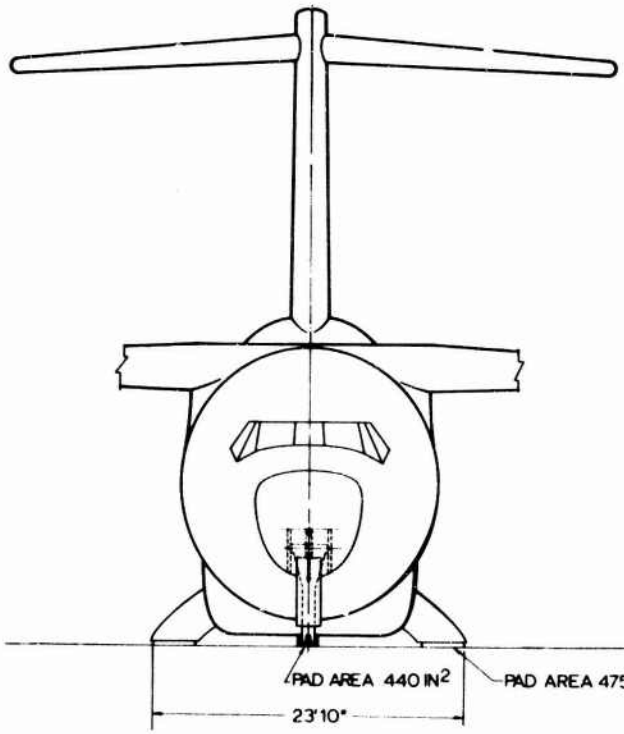

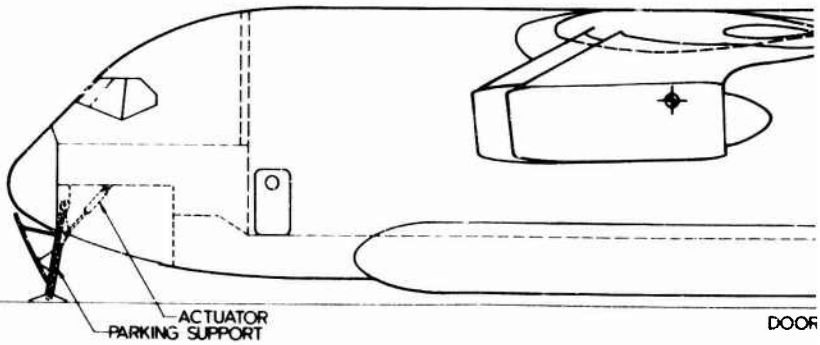

PARKING SUPPORT SYSTEM

Preceding page blank

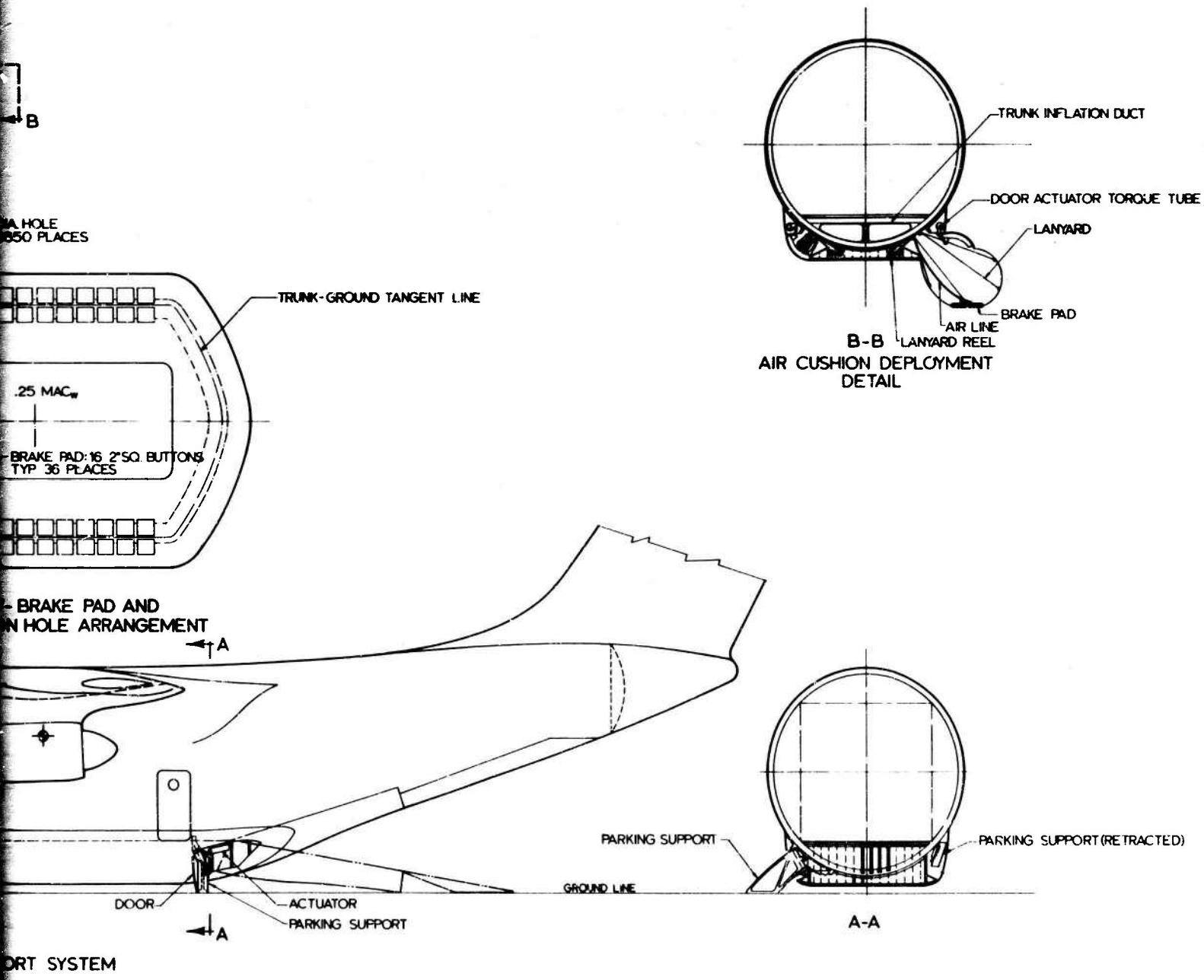

Figure 3: DESIGN DETAILS - A

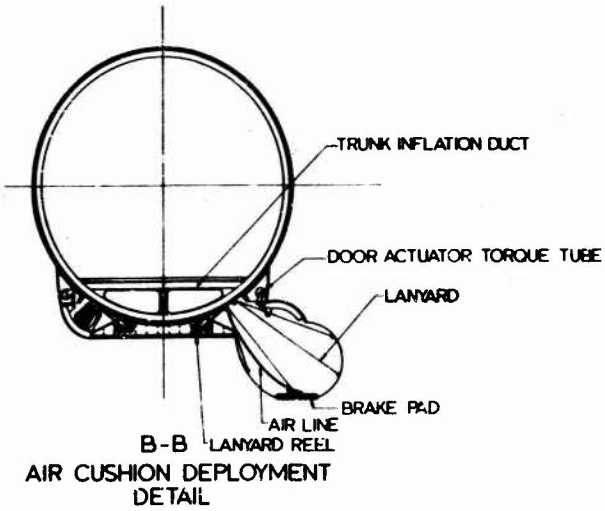

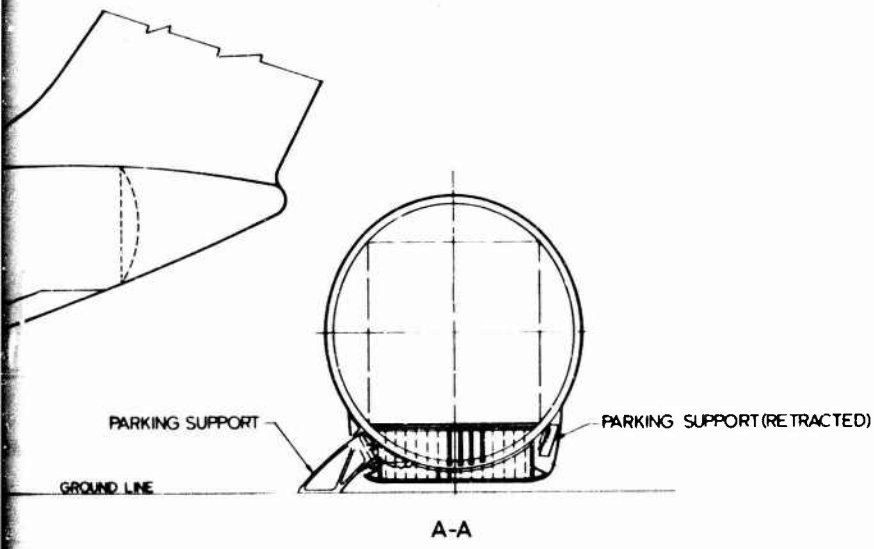

Figure 3: DESIGN DETAILS - ACLS CONFIGURATION

Preceding page blank

	SIDE DOORS	BOTTOM DOORS	ELASTIC TRUNK
PERFORMANCE & STABILITY			
HI-SPEED DRAG	LOW	LOW	SOME INCREASE
HI-SPEED STAB & CONT	LITTLE EFFECT	LITTLE EFFECT	LITTLE EFFECT
T.O. & LANDING, STAB & CONT	EQUIV	EQUIV	WORST
GROUND ROLL	EQUIV	EQUIV	EQUIV
WEIGHT (ACLS INST.)	2750	3450	2850
STRUCTURAL COMPLEXITY	AVERAGE	WORST	BEST
SYSTEM COMPLEXITY	EQUIV	EQUIV	EQUIV
AIR SUPPL	SAME	SAME	SAME
RETRACTION - EXTENSION	COMPLEX	COMPLEX	LESS COMPLEX
S - V	EQUIV	EQUIV	EQUIV
MAINTENANCE	SLIGHTY MORE	SLIGHTLY MORE	AVERAGE
CUSHION COST			
INITIAL - CUSHION	SAME	SAME	MUCH HIGHER
- INSTALLATION	HIGHEST	HIGHEST	LOWEST
- AIR SUPPLY	SAME	SAME	SAME
10 YEAR	EQUIV	EQUIV	EQUIV
GROUND HANDLING	EQUIV	EQUIV	POORER

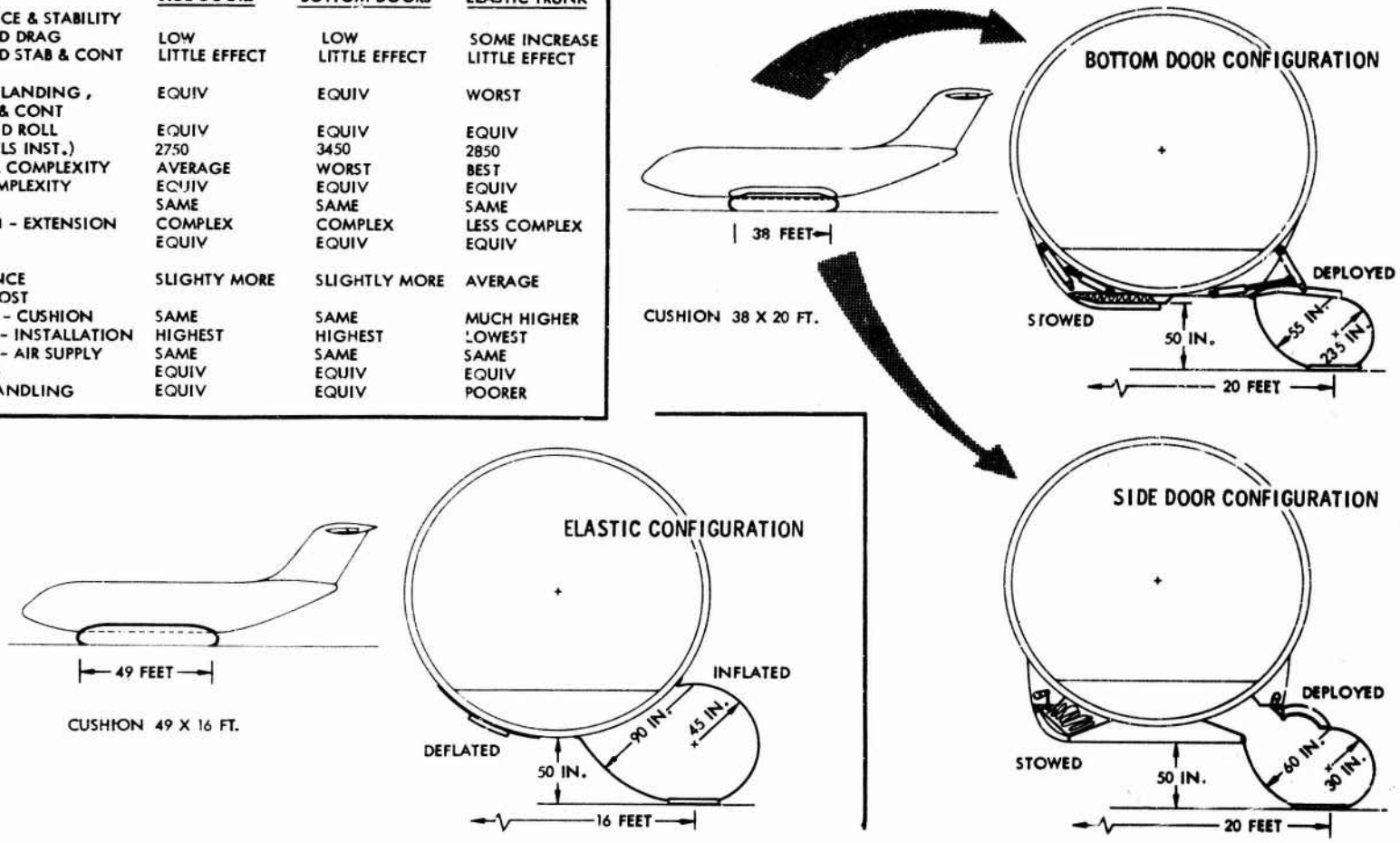

Figure 4: ALTERNATE CUSHION CONFIGURATIONS

developing the fan performance parameters, it is felt that an adequate weight and space allowance was made. See Section 6.1 for further details.

Engine and Fan Location--Since use or encroachment on the "cargo box" volume was not permissible, locations for the air supply engine and fan were limited. The landing gear pods (Figure 1) would have provided ample room in close proximity to the cushion, but to retain this high drag feature would have eliminated a significant advantage of the ACLS installation. Space also exists in the tail cone aft of the cargo door but the long distance and the lack of a convenient space for ducts eliminated this location from consideration. A location above the cargo space either forward or aft of the wing was also abandoned because space was not adequate without enlarging the body contour.

The two configurations most seriously considered were a body/wing mounted installation and one under the crew cabin floor in the area where the nose wheel is located on the baseline configuration. Figure 5 shows these two locations and briefly tabulates the major advantages of each.

Although the under-the-wing location requires shorter ducts and dumps the air into the trunk at its midpoint, the interference effect on the wing and design of ducts to get air down to the trunk without encroaching on the cargo area discouraged this location. A lower body sidewall location (as on the Buffalo C-115 ACLS installation) would have relieved the aerodynamic interference, but additional structural changes would have been necessary.

The under-the-cabin location allows the air supply engines to be located within the normal body contour and in an area where an unpressurized compartment can be designed without significant structural penalty. Maintenance also seems to be improved. With the inlet location held high and forward, it is likely that the ingestion of water spray and debris would be less of a problem than any other location considered, including an upper-body, aft-of-the-wing location.

Preceding page blank

	AIRPLANE NOSE	WING ROOT
WEIGHT (ENG, ENG INST, DUCTING, & VALVING)	2150 LB	2900 LB
DRAG	MUCH BETTER	--
AIRPLANE BALANCE	BETTER	--
MAINTENANCE & REPLACEMENT	BETTER	--
DUCTING COMPLEXITY	LOWER	--
SAFETY	EQUAL	--
S - V	EQUAL	--
FOREIGN OBJECT INGESTION	BETTER	--

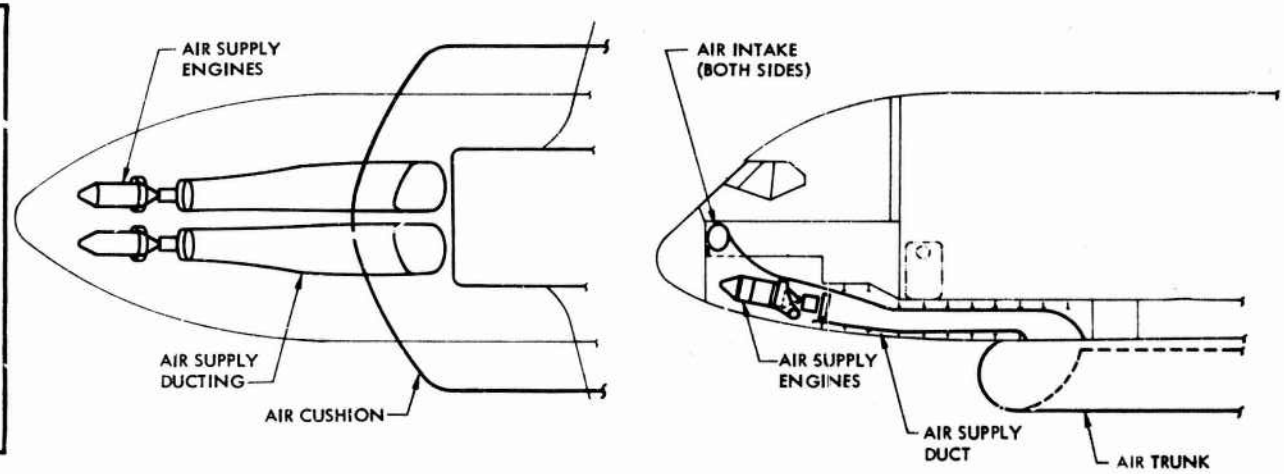

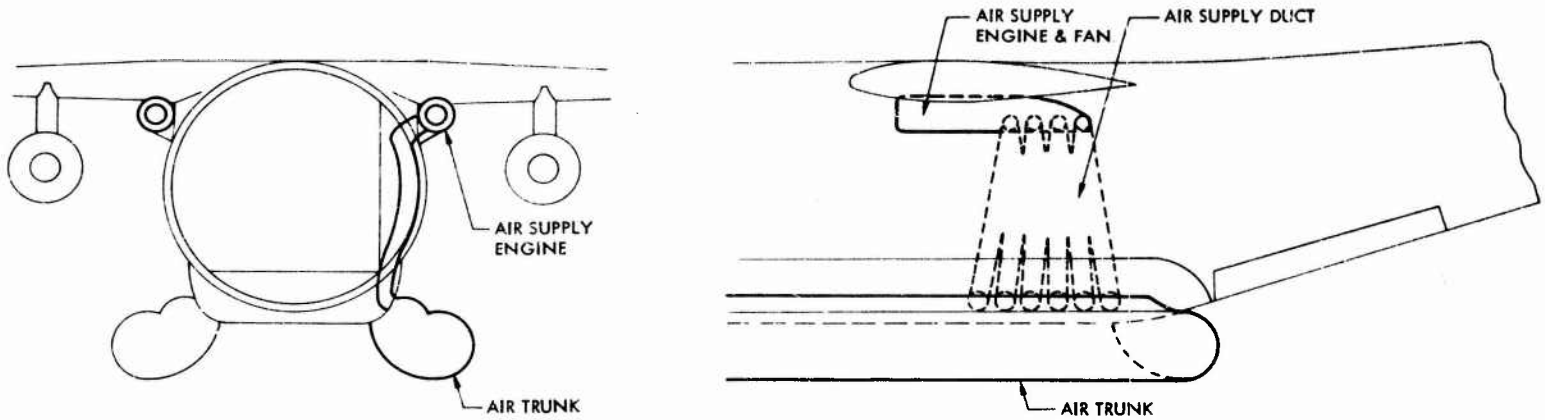

Figure 5: ALTERNATE AIR SUPPLY ENGINE LOCATIONS

The details of the selected engine fan and ducting installation are shown in Figure 3. Adequate ducts can be run under the floor without significantly changing floor beams or body frames. These ducts serve both for trunk pressurization and trunk deflation when the fan is not operating. Fire protection and noise and vibration isolation are required in the ACLS engine compartment. Valves and controls are identified in Figure 8, page 33.

4.3 AIRPLANE MODIFICATIONS

Use of the ACLS will permit a weight savings (see Section 5.2). The main landing gear, the nose gear, and the related load-distributing structure will be unnecessary. It is necessary to add controls, the air source, the trunk, and the parking pads, with their actuators and back-up structure. No changes are contemplated to flight controls or aerodynamic surfaces. The electrical and hydraulic requirements should not cause increases in the size of those systems. For the comparison, no weight or cost allowance was made for the fact that the airplane and its subsystems are operating in a dirtier environment. More experience is needed to properly evaluate this factor. The following estimates summarize these changes.

Baseline airplane operating weight	88,500
Deletions:	(-9,950)
Nose gear	-1,170
Main landing gear	-6,680
Related LG structure	-2,100
Additions:	(+6,150)
Air Source Installation	(+2,150)
Engines, fans, gear boxes	+1,100
Compartment firewalls	+ 160
Engine mounts and exhaust	+ 120
Air ducting	+ 420
Control and fuel provisions	+ 200

Preceding page blank

Fire protection system	+ 50
Miscellaneous equipment	+ 100
Trunk Installation	(+3,000)
Trunk	+1,510
Fairing and fairing doors, actuators	+1,490
Parking Support and Actuators	(+1,000)
Fuel for the ACLS air supply engines	(+ 600)

Net Decrease in Airplane OW (before resizing) = -3,800 pounds

4.4 PARKING, TOWING, AND JACKING PROVISIONS

One of the major areas of concern for the ACLS airplane is the parking and repositioning (towing) of the airplane when the ACLS is not operating. As visualized, the airplane would be taxied onto a somewhat improved area where the pilot would shut down the main propulsion engines as well as the ACLS air supply engines.

In previous designs, such as the Buffalo, the philosophy has been to provide a bladder within the main cushion which could be inflated and would maintain its inflation for an indefinite period. A multicell bladder (six cells for example) would provide needed redundancy to cope with failures and combat damage. However, when the airplane is parked on the internal bladder, maintenance of the trunk, brakes, and other cushion features is difficult, if not impossible. Therefore, it appeared desirable to consider other concepts which would not be integral with the air cushion.

Two other approaches were considered. See Figure 6. The multiple cushion configuration uses a series of identical cushions mounted on the unused fairing area in the center of the ACLS trunk. Adequate area is available and good back-up support is provided. However, the tread or width of these cushions is narrow requiring some outrigger or other supports to prevent airplane rolling during loading or due to winds, etc. These supports were assumed to be positioned manually.

The three-point support concept appears to overcome these problems but could, if not designed properly, result in load concentrations that would mean more weight. By attaching the aft support points on the cargo door bulkhead, it was found that little additional structural penalty was experienced.

In addition, the three-point support concept can substitute for airplane jacking as well, thus, saving some weight. It is also the only one of the configurations which provides a reasonably convenient method for attaching dolly wheels (Figure 7) for towing or repositioning in the hangar or on the field. This capability of moving the airplane without energizing the air cushion is mandatory for an operational airplane because of a problem of debris in loading, maintenance, and hangar areas.

The resulting configuration is shown on Figure 3. The footprint areas are based on 200 pounds/inch^2 at maximum gross weight which would appear to be ample in areas where parking would be expected. In special cases, ground shoring could be provided. A tread width of nearly 24 feet provides greater lateral stability than obtained with the conventional gear. Hydraulic actuation allows the pilot to position the supports before shutting down the ACLS. It is also intended that the cargo door could be opened with the aft parking supports stowed. In subsequent design effort, attention should be given to adjustable length supports (equivalent to kneeling).

4.5 BRAKES

Braking is provided by fabric reinforced rubber tread pads with a waffle tread as shown in Figure 3. Brake pad area has been sized to give stopping equivalent to the baseline (wheeled) airplane. The waffle pattern allows the brake pad to conform to an irregular landing surface, to be more easily stowed, and improve the cooling of the braking surface. Metal threads molded into the cushion material provide the thermal conduction to keep contact surfaces from overheating. The design analysis and performance curves are found in Section 6.1.

The brakes are activated by pressurizing the pillows as shown on Figure 3. Brake pressure is modulated by pilot pedal pressure as shown in the diagram on Figure 8.

4.6 ACLS CONTROLS

The control functions required to operate the ACLS systems are shown on Figure 8. The figure depicts only the functions required and does not show redundancy aspects, warning, indication, or interlocking features.

Engine and fan air inlet doors, trunk doors, parking support system, and trunk retraction cord reels are hydraulically operated, on electrical commands from the cockpit control panel. The brake system

is also armed from this panel by a solenoid actuated bleed valve which provides regulated engine bleed pressure to hydraulically actuated modulating valves controlled by the brake pedals. Differential braking and the desired degree of braking can be obtained with this approach. Engine operation is controlled from a start/run/stop switch. At operating speeds the centrifugal clutch engages the fan and pressurization and inflation of the trunk occur.

Deflation of the trunk occurs upon engine shut down, by expelling the trunk air through the duct system exiting via the air inlets. A hydraulic motor operated reel/lanyard system assists the deflation process as well as orienting the trunk for stowage.

	INTERNAL BLADDER	MULTIPLE CUSHIONS	3 POINT SUPPORT
COST - INITIAL - 10 YR.	EQUAL EQUAL	LESS EQUAL	EQUAL EQUAL
WEIGHT	LESS	LEAST	MOST
COMPLEXITY - STRUCTURAL - MECHANICAL	EQUAL MOST	EQUAL LESS	MOST LEAST
OPERATIONAL CONSIDERATIONS			
- CARGO LOADING	EQUAL	EQUAL	BEST
- SERVICING	EQUAL	EQUAL	EQUAL
- PARKING	EQUAL	EQUAL	EQUAL
- FOOTPRINT PRESSURE	LOW	LOW	HIGH
MAINTENANCE CONSIDERATIONS			
- PARKING	EQUAL	INCONVENIENT (MAN PLACED SUPPORTS)	EQUAL
- JACKING	EQUAL	EQUAL	BEST
- REPOSITION- (TOWING)	DIFFICULT	DIFFICULT	BEST (WHEELED DOLLIES)
- CUSHION OR BRAKE REMOVE & REPLACE	DIFFICULT (REQUIRES JACKING)	EASIER	BEST
- ACCESS FOR OTHER MAINTENANCE	WORST	BETTER	BEST

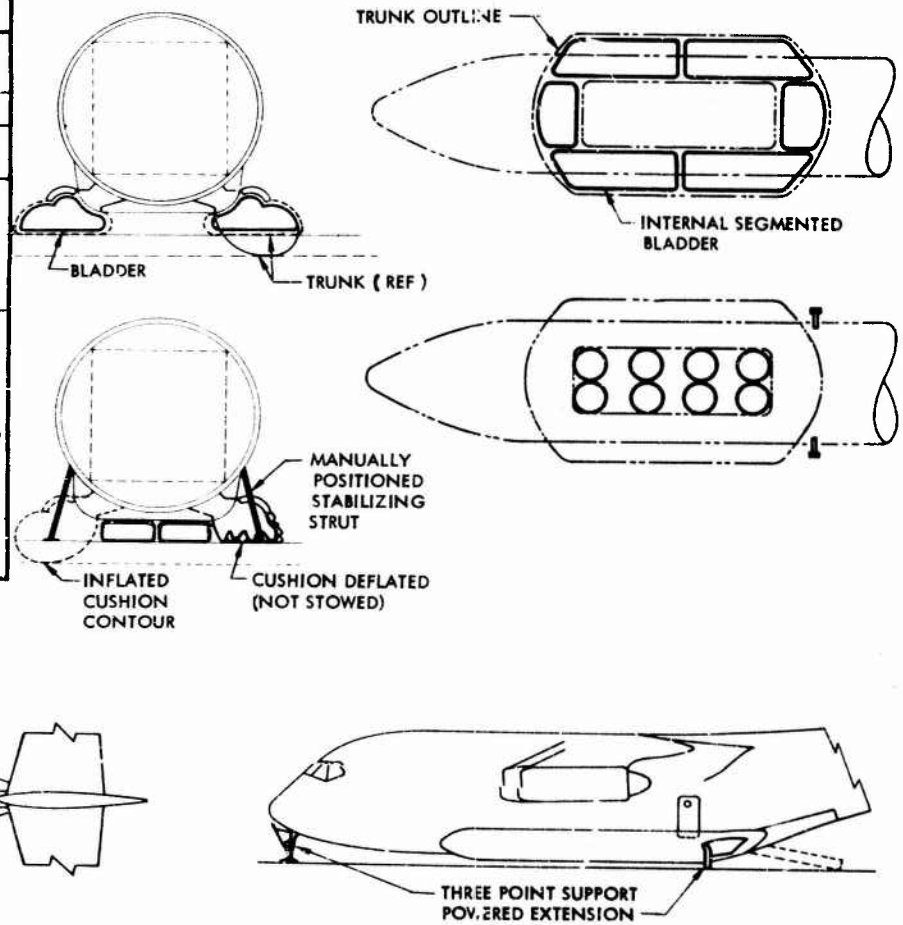

Figure 6: ALTERNATE PARKING CONFIGURATIONS

Preceding page blank

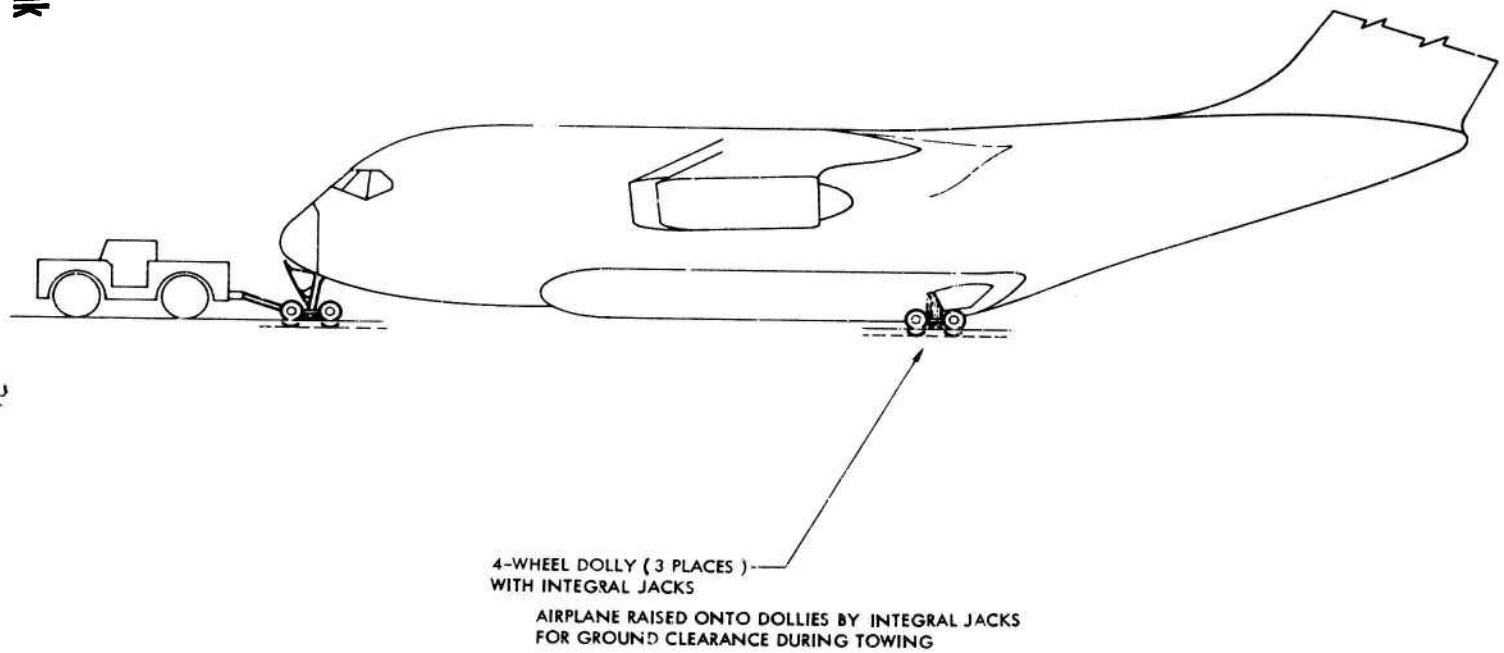

Figure 7: DOLLY SUPPORT -- TOWING

Preceding page blank

33

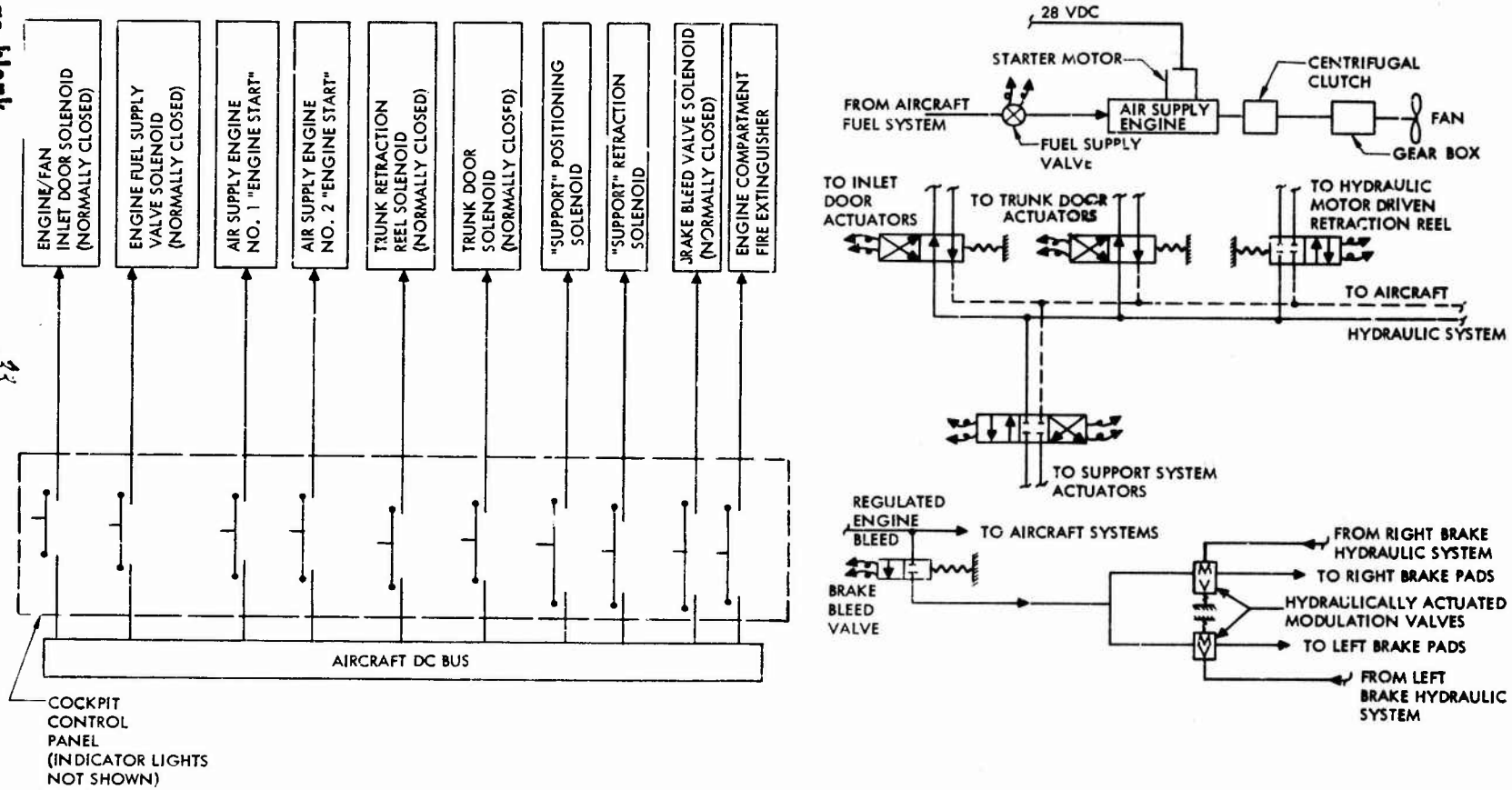

Figure 8: ACLS CONTROL SYSTEM

SECTION V

ACLS VS. CONVENTIONAL GEAR

5.1 OVERVIEW

Figure 9 summarizes the results of the comparison of the baseline configuration with the ACLS configuration. The basic evaluation parameters used are:

Weight

Cost

Reliability

Maintainability

Airplane Performance

A subjective evaluation of the impact of the ACLS configuration on ground operations, and the enhancement of MST operational capability is also provided.

The use of an ACLS permits a dimensional shrinking of approximately 2-1/2 percent of the baseline airplane and results in a reduction in gross weight of 10,080 pounds over the conventional gear system.

The study rationale and results for each parameter are discussed in greater detail in subsequent subsections.

5.2 WEIGHTS

The weight estimate for replacing the conventional landing gear system with an air cushion landing system is shown below. The estimates for the conventional gears are statistically derived weights based on previous analysis of the Model 953-801 MST (Figure 1). The weights for the air cushion system are also statistically derived estimates.

Conventional Gear

The weight for removing the conventional gear includes both the gears and body structure associated with the gears.

Nose Gear	-1,170 pounds
Main Gear	-6,680 pounds
Total Gear	-7,850 pounds

Preceding page blank

SYSTEM	TOGW (LBS)	10 YEAR LIFE CYCLE COST ($ IN MILLIONS)	RELIABILITY		MAINTAIN-ABILITY	DRAG C_D		GROUND HANDLING	MISSION CAPABILITY
			MAINT CAUSING FAILURES PER FLT HOUR	ABORT CAUSING FAILURES PER FLT HOUR	MAINTENANCE MANHOURS PER FLT HOUR	TAKE OFF	MAX CRUISE		
BASELINE (CONVENTIONAL GEAR)	BASELINE	BASELINE	0.225	0.00091	1.01	.2600	.0447	BASELINE	BASELINE
ACLS AIRPLANE	-10,080	-64.2	0.213	0.00089	1.06	.2623	.0445	MORE DIFFICULT	IMPROVED
Δ FROM BASELINE	-10,080	-64.2	-.012	-.00002	+0.05	+.0023	-.0002	MORE DIFFICULT	IMPROVED

- WEIGHT - INCLUDES INSTALLATION WEIGHTS, STRUCTURAL, AND FUEL EFFECTS
- COST - INCLUDES DEVELOPMENT, PRODUCTION, AND OPERATIONS AND MAINTENANCE COSTS, BASED ON A FLEET SIZE OF 200 AIRCRAFT
- RELIABILITY/MAINTAINABILITY - ASSUMES ACLS SYSTEM HAS REACHED DEVELOPMENT AND MATURITY OF A CONVENTIONAL GEAR SYSTEM. (LANDING GEAR ONLY)
- MISSION CAPABILITY - REFERS TO MISSION ENHANCEMENT (i.e. OVERWATER AND ROUGH FIELD OPERATION, VULNERABILITY AND SURVIVABILITY ASPECTS)

Figure 9: TRADE STUDY SUMMARY

The body related structure would include support bulkheads, doors, fairing, etc. This weight is estimated at 12 percent of the body weight, or 2,730 pounds (C-141A is 11.7 percent, C-130E is 11.1 percent). It was estimated that 630 pounds of weight would have to be added back for the ACLS, therefore the net reduction to the body weight is 2,100 pounds.

The total weight reduction would be 7,850 + 2,100 = 9,950 pounds.

Air Cushion Landing System: (See Section 4.3)

Air Cushion Installation	+3,000 pounds
Air Source Installation	+2,150 pounds
Parking Support System	+1,000 pounds
Total Air Cushion System	+6,150 pounds

MST/ACLS Operating Weight:

MST Conventional Operating Weight	=	88,500 pounds
Removal of Gears	=	-9,950 pounds
Addition of ACLS	=	+6,150 pounds
Correction for Resizing (-2 1/2%)	=	-2,680 pounds
Operating Weight MST/ACLS	=	82,020 pounds

MST/ACLS Basic STOL Mission Takeoff Weight:

Operating Weight	82,020 pounds
Payload	28,000 pounds
Fuel	25,340 pounds*
Takeoff Weight	135,360 pounds

*Includes 600 pounds fuel for ACLS engines.

The preliminary weight estimate shows a reduction in operating weight of 5,480 pounds (88,500 -82,020), and reduction in maximum takeoff weight of 10,080 pounds (145,440 -135,360). Because of the limited in-depth analysis related to preliminary sizing of any of the structure, the accuracy of the weights shown are estimated at ±10 percent, and therefore the possible range is:

Item	Nominal Weight	±10%
Conventional Gear	-9,950	±995
ACLS	+6,150	±615

If in applying the tolerance the conventional gear is assumed to weigh 10 percent less, and the ACLS 10 percent more, the reduction in operating weight, instead of being 5,480 pounds, would be 5,480 -995 -615 = 3,870 pounds. If the tolerance were applied in the other direction the reduction in operating weight would be 5,480 +995 +615 = 7,090 pounds.

5.3 COST

An estimate of the difference in the 10-year life cycle cost attributed to the landing gears of the two configurations is tabulated below. The estimates assume a fleet size of 200 aircraft with a utilization rate of 12 missions per month at an average of 5.7 hours per mission. This utilization rate is based on Pope AFB data for C-130 operations.

Conventional gear costs are based on scaling 727 gear costs with allowance for MST requirements. ACLS development and production costs are estimates based on information from Goodrich, Goodyear, and Bell Aerosystems. Fuel costs attributable to the weight savings of the ACLS configuration are based on 3,890 pounds of fuel at 10.5 cents/gallon. This results in a $63 savings per mission. The cost savings resulting from 6,190 pounds less structure and systems is estimated at $278,000 per aircraft. This sizeable savings provides a good margin of tolerance for offsetting any inaccuracies in the development and production cost estimates.

No attempt has been made to assess the cost differences that would arise as a result of the greater versatility of an ACLS (i.e. cost of maintaining forward bases of CBR 6 or better, reduction of fleet size, etc.).

Conversely, no allowances have been made for added maintenance due to the more severe debris and water spray environments in which an ACLS equipped aircraft would be exposed.

A comprehensive analysis of these influences should be conducted when configuration and operating performance is better defined.

Cost Item	Baseline Cost Mil $	ACLS Cost Mil $	Cost from Baseline Mil $
Landing Gear Development Cost	1.0	10.0	+ 9.0
Landing Gear Production Cost	58.0	60.0	+ 2.0
Reduced OEW Cost Savings for ACLS	-	-55.6	-55.6
Maintenance Cost	-	0.5	+ 0.5
Fuel Cost	-	-18.1	-18.1
Total (200 Aircraft)			-64.2
Total (Per Aircraft)			- .321 ($321,000)

5.4 PERFORMANCE

The performance analysis of the ACLS configuration resulted in a reduction in net gross weight of 10,080 pounds from the baseline system. This weight reduction is achieved by resizing the aircraft while maintaining a constant field length and mission capability. The detailed analysis is contained in the Aerodynamic Analysis of the substantiating data, Section 6.2.

5.5 STRUCTURAL MODIFICATIONS

The basic structure of the MST is well suited for ACLS application. The pressure cabin structure is capable of resisting the trunk tension loads with no additional reinforcement and the lower surface of the body is capable of surviving an ultimate ditching pressure of 15 p.s.i. The conventional gear for the MST has a long stroke and is of a levered suspension type because of the requirements associated with semi-prepared runway operation. Removal of the gear, its supporting structure, and its fairing will permit removal of some of the internal fuselage support structure.

Addition of the ACLS fairing will not affect the rest of the fuselage structure. The only modifications will be under the floor behind the nose wheel well where it is now necessary to run the air supply ducting. The

ACLS fairing itself is of straightforward construction only complicated by the door actuation. No additional back-up structure will be required for the parking supports since the cargo door bulkhead provides sufficient inherent strength.

5.6 MAINTAINABILITY

The maintenance man-hours per flight hour (MMH/FH) requirements for both the baseline and ACLS configurations are shown on Figure 10. The maintenance projections shown for the baseline aircraft are similar to the C-141 aircraft and are derived from USAF 66-1 maintenance data. The projections shown for the ACLS aircraft are based on the accumulation of experience and data for similar hardware, and assumes that specific ACLS hardware, such as the trunk, brakes, tread, etc., has achieved a development status commensurate with conventional gear systems. Allowance has been made on the cost estimates for this development.

The ACLS maintenance procedures and operations for the trunk and trunk inflation equipment would be significantly different than current landing gear maintenance; however, doors, actuators, and hydraulic system maintenance approaches would be similar to current practices.

Some additional complexity is introduced by an ACLS for those maintenance operations that require towing. This would necessitate the installation of wheeled dollies or similar devices, thus increasing the man-hour requirements. It is possible, however, that these operations could be minimized by the institution of different procedures or new basing concepts.

Maintenance inspection times could be improved for an ACLS configuration since a substantial part of the hardware, such as the engines and fans, possess parameters that can be somewhat easily monitored by an on-board automatic checkout system. By automatically monitoring parameters such as pressures, temperatures, fluid quantities, etc., inspection times could be reduced and confined to routine visual inspections of the trunk, tread, and braking surfaces.

Figure 10 estimates show both configurations to be surprisingly close. Again, it must be restated that the ACLS estimate is predicated on its having achieved the state-of-the-art of conventional gear systems, and until sufficient developmental experience and better hardware definition are available, the estimate must be tempered with judgment.

BASELINE		ACLS	
	MMH/FH		MMH/FH
MAIN GEAR	0.29	TRUNK INFLATION POWER UNIT	0.40
NOSE GEAR	0.06	TRUNK, DUCTING AND VALVES	0.30
CONTROLS	0.01	CONTROLS	0.01
BRAKES AND ANTI-SKID	0.25	BRAKE PILLOWS, DUCTING AND VALVES	0.10
STEERING	0.06	INTAKE, EXHAUST DOOR AND ACTUATION	0.01
EMERGENCY SYSTEM	0.02	PARKING SUPPORTS AND ACTUATION	0.05
WHEELS AND TIRES	0.31	TRUNK DOORS AND ACTUATION	0.07
OTHER	0.01	OTHER (INCLUDING ADDITION OF DOLLY WHEELS FOR TOWING)	0.12
TOTAL	1.01		1.06

Figure 10: LANDING SYSTEM MAINTENANCE COMPARISON

5.7 RELIABILITY

Reliability data for both the baseline and ACLS configurations are shown on Figure 11. Two specific reliability criteria were investigated:

1. Failures that result in subsequent maintenance requirements and action.

2. Failures causing abort of the mission.

Both failure rates are expressed in terms of failures per flight hour, and are based on extensive field experience as in the case of the maintenance data. C-141 values are used for the baseline configuration. The investigation was conducted with the following basic assumptions:

1. The ACLS is a mature system with a development status commensurate with a conventional gear system.

2. Equipment failures are not a result of combat incurred damage.

The results of the analysis show relatively little difference between both systems. The abort-causing failure rate for the trunk inflation power unit is relatively small because the system has been designed to perform with one power unit operating. The estimate shown for the power units is less than current engine or APU values. This lower estimate is due to an allowance made for the intermittent duty cycle associated with ACLS operations. If trunk inflation were dependent on a single power unit, the abort failure rate would be more than double the present estimate. A concern that must be explored further is the effect of ACLS generated debris on the airplane and its systems. No allowance has been made for this effect due to the lack of data on this subject.

5.8 GROUND OPERATIONS

The following discussion compares the baseline, conventional gear aircraft with the ACLS equipped aircraft as related to the ground operations of parking, jacking, towing, and servicing. Only the most salient features or differences are cited.

Parking

The baseline aircraft, at the design STOL weight, can park on CBR 4 soil. The ACLS aircraft with a three-point support parking system would require some shoring for parking on soft soils or a modestly

BASELINE			ACLS		
	MAINT. CAUSING FAILURES/ F.H.	ABORT CAUSING FAILURES/ F.H.		MAINT. CAUSING FAILURES/ F.H.	ABORT CAUSING FAILURES/ F.H.
MAIN GEAR	0.052	0.00029	TRUNK INFLATION POWER UNIT	0.125	0.00001*
NOSE GEAR	0.015	0.00010	TRUNK, DUCTING & VALVES	0.010	0.00002
CONTROLS	0.001	0.00001	CONTROLS	0.001	0.00001
BRAKES AND ANTI-SKID	0.085	0.00034	BRAKE PILLOWS, DUCTING & VALVES	0.016	0.00010
STEERING	0.006	0.00012	INTAKE, EXHAUST DOORS & ACTUATION	0.001	0.00010
EMERGENCY SYSTEM	0.010	0.00002	SUPPORT PADS	0.020	0.00015
WHEELS & TIRES	0.056	0.00003	TRUNK DOORS & ACTUATORS	0.030	0.00030
OTHER	-	-	OTHER	0.010	0.00020
TOTAL	0.225	0.00091		0.213	0.00089

* BASED ON LOSS OF OUTPUT FROM BOTH FANS

Figure 11: LANDING SYSTEM RELIABILITY COMPARISON

prepared surface (150 pounds/inch^2). Neither configuration is capable of parking on water, and it is doubtful that even an inflatable bladder support system would provide static flotation on water since bladder volume requirements would exceed practical dimensions for this aircraft. Emergency flotation bags could be provided to preclude loss of aircraft.

Jacking

Jacking of the baseline configuration for leveling, weighing, landing gear checkout and other maintenance functions can be accomplished with standard body jacks to a pad on the forward body and one on the aft body and with a wing jack under each wing. Jacking of the ACLS configuration can be accomplished with standard axle jacks applied at each of the three support points, thus eliminating the wing jacking points required for the baseline configuration.

Towing

The conventional gear system has a decided advantage over the ACLS system with respect to towing since wheels are inherent and are a necessity for towing. Towing of the proposed ACLS configuration with the three point parking support system may be accomplished by attaching wheeled dollies to each of the support points as shown in Figure 12. This will introduce an additional maintenance expenditure to accomplish the task of attaching dolly wheels. However, a three-point support system inherently provides the location for the dolly wheels, whereas an inflatable bladder support system cannot integrate both functions and, therefore, additional provisions would be required.

Servicing

Servicing and preflight inspection requirements appear to be identical for both aircraft configurations except for the differences introduced by the different gear concepts. Inspection times should be similar after an ACLS system has been put into practice and a good set of procedures defined. Relocation of such equipment as the APU, environmental control equipment, hydraulic servicing and refueling panel, and ground power receptacles may be required but adequate space and servicing access appears to be available in the aft body or under the crew compartment floor.

FIELD TYPE	CONVENTIONAL GEAR	ACLS
ESTABLISHED BASE, HARD SURFACED RUNWAY AND TAXIWAY OF 10,000 FT FIELD LENGTH	• MAXIMUM GROSS WEIGHT 194,000 LB • UNLIMITED USAGE	• MAXIMUM GROSS WEIGHT 194,000 LB • UNLIMITED USAGE
BARE SOIL FIELD RUNWAY OF CBR 6 WITH 2,000 FT FIELD LENGTH AND TAXIWAY CBR 4	• MAXIMUM STOL WEIGHT 133,000 LB • FIELD USE LIMITED TO 200 PASSES	• MAXIMUM STOL WEIGHT 133,000 LB • FIELD SURFACE ALLOWS UNLIMITED USAGE
UNPREPARED FIELDS RUNWAY AND TAXIWAY OF CBR4, WITH FIELD LENGTH FREE OF OBSTRUCTIONS FOR 2,000 FT	• MAXIMUM STOL WEIGHT 133,000 LB. • FIELD USE LIMITED TO APPROXIMATELY 10 PASSES	• MAXIMUM STOL WEIGHT 133,000 LB • FIELD SURFACE ALLOWS UNLIMITED USE. • HIGHER GROSS WEIGHT CAPABILITY DEPENDENT ON FIELD LENGTH
UNPREPARED FIELDS OF 2,000 FT LENGTH WITH OBSTRUCTIONS OR DITCHES NOT EXCEEDING 18 INCHES IN HEIGHT OR ~~DEPTH~~	• CANNOT OPERATE	• UNLIMITED USE AT MAXIMUM STOL WEIGHT. • HIGHER GROSS WEIGHT CAPABILITY DEPENDENT ON FIELD LENGTH
WATER, WITH ACCESS TO BEACH FOR PARKING MARSHES AND SNOW	• CANNOT OPERATE	• UNLIMITED USE AT MAXIMUM STOL WEIGHT • BEACH MUST NOT HAVE OBSTRUCTIONS EXCEEDING 18 INCHES IN HEIGHT • HIGHER GROSS WEIGHT CAPABILITY DEPENDENT ON FIELD LENGTH

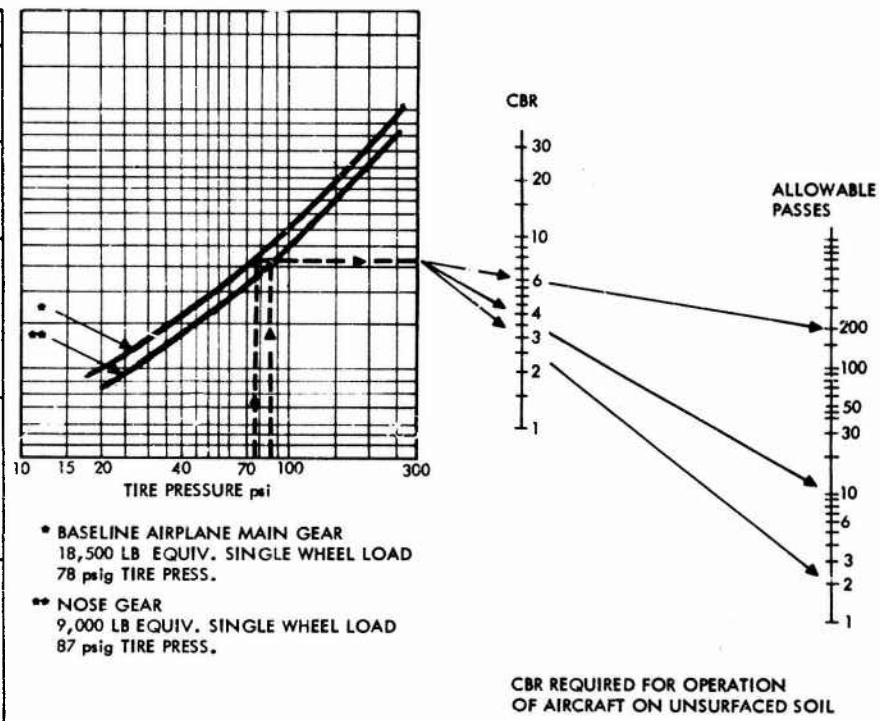

(REF. AFFDL-TR-68-88)
Ref. 3

Figure 12: LANDING FIELD CAPABILITY

5.9 MISSION IMPACT

The basic mission of a medium STOL transport aircraft system is to provide transportation of personnel and equipment to strategic and tactical locations within the theater of operations.

The effectiveness of the aircraft system can be measured by its ability to move cargo as close as possible to its eventual destination. A transport airplane which can operate with little or no landing field preparation (such as a water surface, or roughly bulldozed field) thus becomes a much more useful vehicle. Potentially, increased operational effectiveness can be gained for a transport aircraft by employing an air cushion landing system in lieu of a conventional gear.

The use of an ACLS aircraft would permit operation to and from austere forward bases in which little or no improvement or preparation is required. These include improved fields, unimproved fields, plowed fields, marshes, lakes, beaches, snow covered areas, and lagoons. This capability broadens the selection of "forward" sites, and permits the aircraft to move cargo much closer to its eventual destination. It is limited only by the ability to defend and provide security for that site. Figure 12 provides a summary comparison of the potential of each configuration with respect to landing surfaces.

Improved Fields Operation

Operation from improved fields requires that the aircraft be controllable to the same degree as conventional gear craft. For the ACLS aircraft, controllability can be accomplished using differential engine thrust and braking. The trunk tread should be durable such that the replacement rate is not greater than that for tires. Some additional pilot training will be necessary to accustom him to traveling in a direction other than the heading of the aircraft.

Unimproved Fields Operation

Runway load bearing capability required to support an aircraft is a pertinent factor for establishing a runway, especially for an austere forward base, since time and cost for preparation, maintenance, and defense may neither be available nor practical. With an ACLS aircraft, the soil bearing characteristics normally required for runways and taxiways can be significantly reduced, thereby making several unprepared, natural sites available to it, that would not be available to a conventional gear aircraft without extensive preparation and maintenance. However, some landing surface, maintenance, and servicing requirements, although minimal, must be met to accommodate the ACLS aircraft.

The landing surface must be fairly level. Surface irregularities such as ditches, stumps, rocks of limited size, furrows, etc., can exist, but the landing field profile can be no more varied than that for a conventional gear aircraft. Pilot visibility and engine ingestion at low speeds are salient problems on surfaces of loose composition. Surface-effect vehicles have similar problems, but the higher cushion pressures associated with ACLS aircraft could increase the severity of the condition.

Any operational site must have some land, air, or water access to provision it. The servicing and maintenance provisioning for an ACLS aircraft would be no different than that for a conventional aircraft. Items relating to runway operation such as loading, fueling, communications, lighting, and parking area requirements are basically the same. Platforms of wood, mats, or asphalt, onto which an ACLS aircraft could taxi for maintenance and servicing would be required along with some minimal sheltering for personnel and maintenance operations.

Water and Marsh Operation

No static flotation capability exists with either the ACLS or conventional gear conf. urations. Overwater and marsh operations are possible with the ACLS configuration. At low speeds, visibility and engine ingestion problems due to water spray may be severe. Drag also becomes significant near hump speed although power is available to accelerate through hump speed if necessary. Figure 13 shows an estimate of overwater drag as a function of aircraft speed. The estimate is based on calculations using the approaches in Reference 11. The curve suggests that minimum water operation speed be greater than 15 knots (hump speed). This is a fairly modest speed for taxiing in and out of the water and should not compromise the operational capability of an ACLS aircraft. A barge as shown in Figure 14 could be located in a lagoon, river, or on the beach and could provide an adequate platform and service area for an ACLS equipped aircraft. In addition, it would provide a significant security advantage in that it could be easily moved. Overwater capability of the aircraft would also permit greater overload missions since longer takeoff surfaces would be available.

The effect of an ACLS concept could provide a significantly different approach to "basing" of transport aircraft and some of the objectives of VTOL aircraft could probably be achieved with an ACLS STOL aircraft more economically.

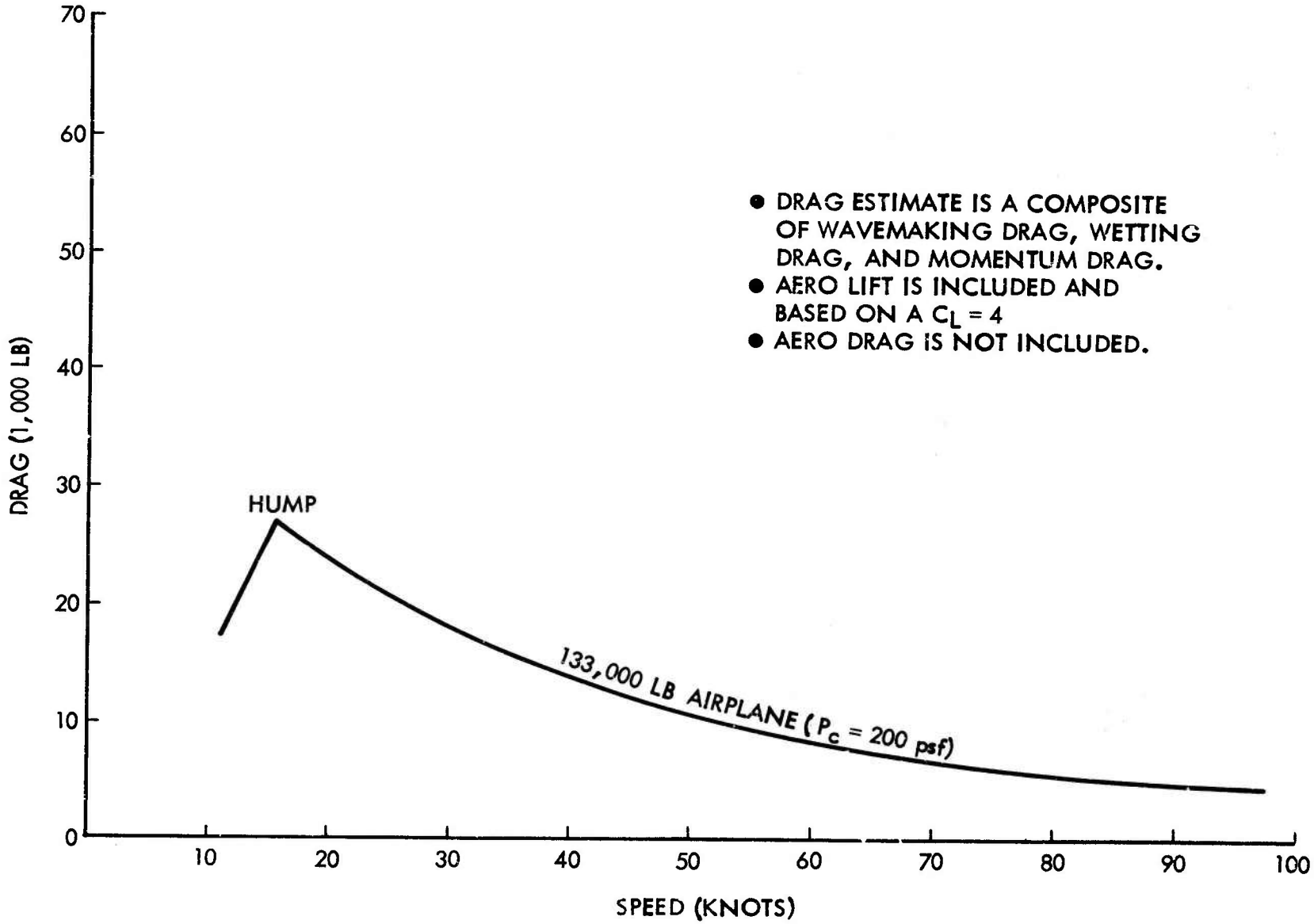

Figure 13: OVER WATER DRAG

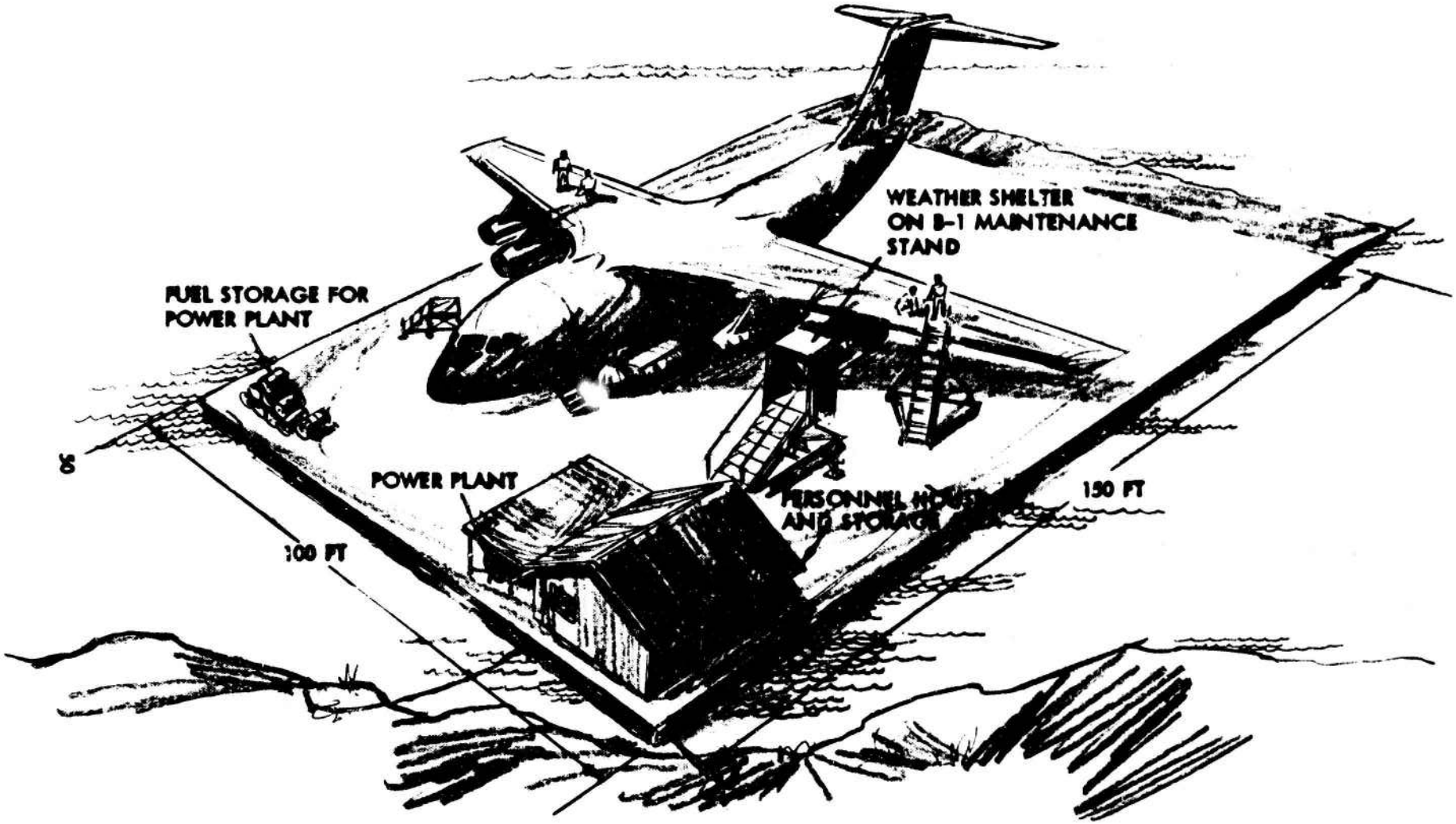

Figure 14: LANDING FIELD REQUIREMENTS

SECTION VI

SUBSTANTIATING DATA

6.1 SYSTEMS ANALYSIS

6.1.1 Cushion System Analysis

The assumptions and analyses that follow were used to determine cushion, trunk, fan, and power source requirements. The analyses are based on the peripheral jet theory and trunk sizing is consistent with maintaining as low a cushion pressure as possible without compromising the total aircraft configuration. Low cushion pressures reduce over-water drag effects and also lessen the risk of engine ingestion of dust and debris that would be more pronounced at higher cushion pressures while in "ground effect." However, extremely low cushion pressures would require larger trunks and stowage volumes.

Trunk hole sizing is based on selecting a size and number of holes that would provide a good distribution of airflow over the established periphery with little or no susceptability to "plugging" from dust and debris.

Two PT-6 engines appear to be adequate to provide power to the fans to meet cushion requirements. It is assumed that one engine can support the aircraft with an attendant reduction in gap height. This would provide redundancy for a landing situation with one air supply engine inoperative.

Figures 15 and 16 respectively, show estimated fan performance and gap height and aircraft gross weight as a function of fan operating characteristics.

Figures 17, 18, and 19 show several relationships of cushion sizing parameters.

<u>Basic Criteria and Assumptions</u>--

1. Airplane Gross Weight (W) = 132,350 pounds

2. Cushion Area (A) = 660 feet^2

3. Cushion Perimeter (S) = 104 feet

4. Cushion Pressure (P_c) = 1/2 Trunk Pressure (P_j)

5. Airflow Leakage Allowance (Fan to Trunk Orifices) = 75 feet^3/sec.

6. Pressure Losses (ΔP) (Fan to Trunk Orifices) = 75 psf

7. Average Gap Height (h) = 0.04 feet (0.48 inch)

Airflow Calculations--

$$P_c = \frac{132,350}{660} = 200 \text{ psfg}$$

for $P_c/P_j = 0.5$; trunk pressure = 400 psfg

fan pressure = trunk pressure + transmission losses

fan pressure = 400 + 75 = 475 psfg

fan pressure ratio = 1.223

cushion velocity (V_c) = $K\sqrt{P_c} = 29\sqrt{200} = 410$ feet/second

K = 29 for standard day

volume flow (Q_c) = $S\ V_c\ h$

$Q_c = (104)(410)(0.04) = 1700$ feet^3/second

leakage allowance = 75 feet^3/second

Q_c total = 1,775 feet^3/second

for standard day, $\rho = 0.0765$ pound/foot^3

mass flow = (0.0765) (1,775) = 136 pounds/second

Turbine Horsepower Calculations--

Total mass flow = 136 pounds/second

for two turbine driven fan units output flow per fan = 68 pounds/sec.

$$\text{Turbine Horsepower Required} = \frac{m\ C_p\ T_i\ (P_r^{\frac{\gamma-1}{\gamma}} - 1)}{.707\,\eta}$$

Turbine Horsepower Required = 912

for η = 78% (82% adiabatic and 95% mechanical efficiencies)

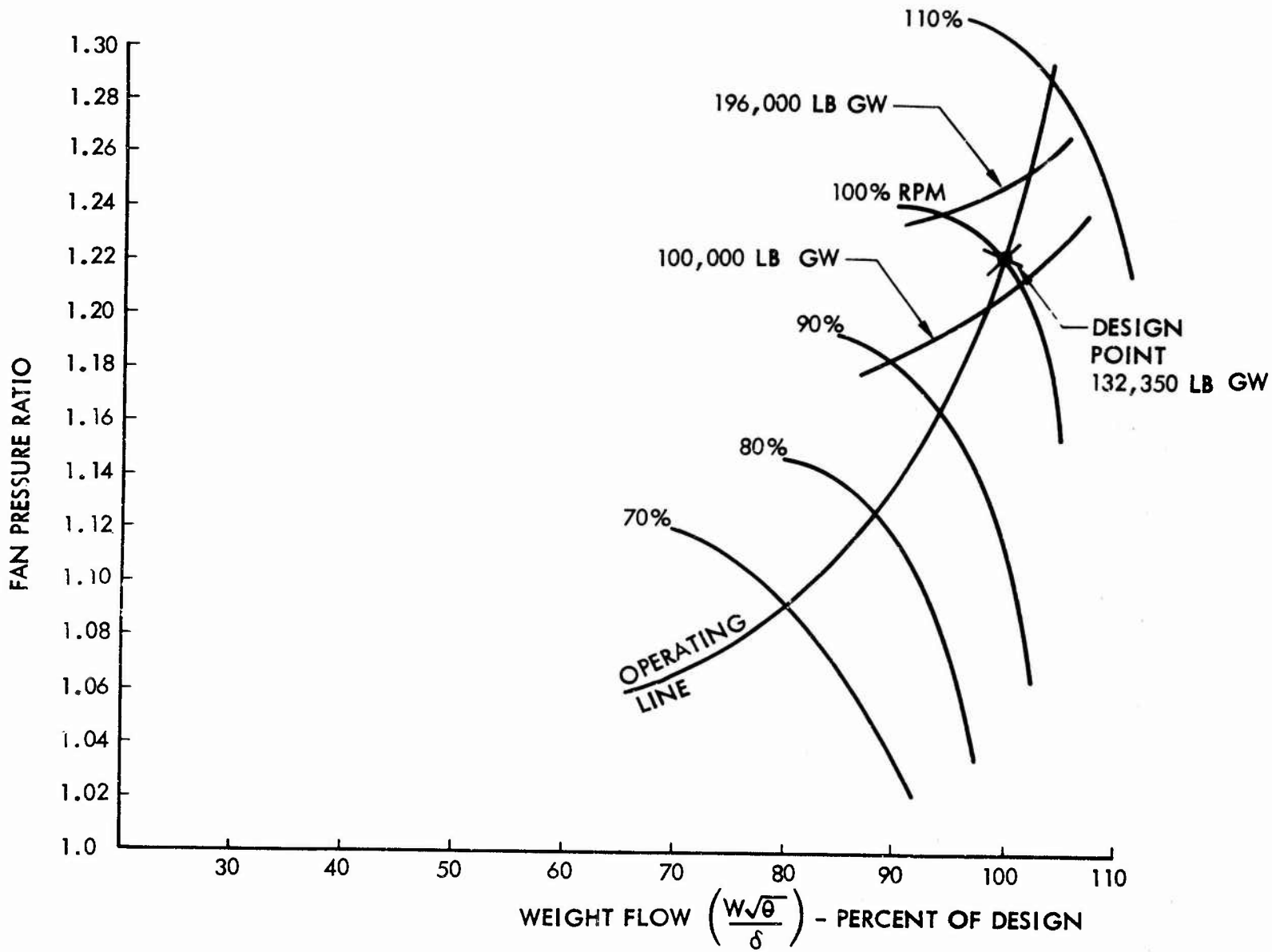

Figure 15: ESTIMATED FAN CHARACTERISTICS

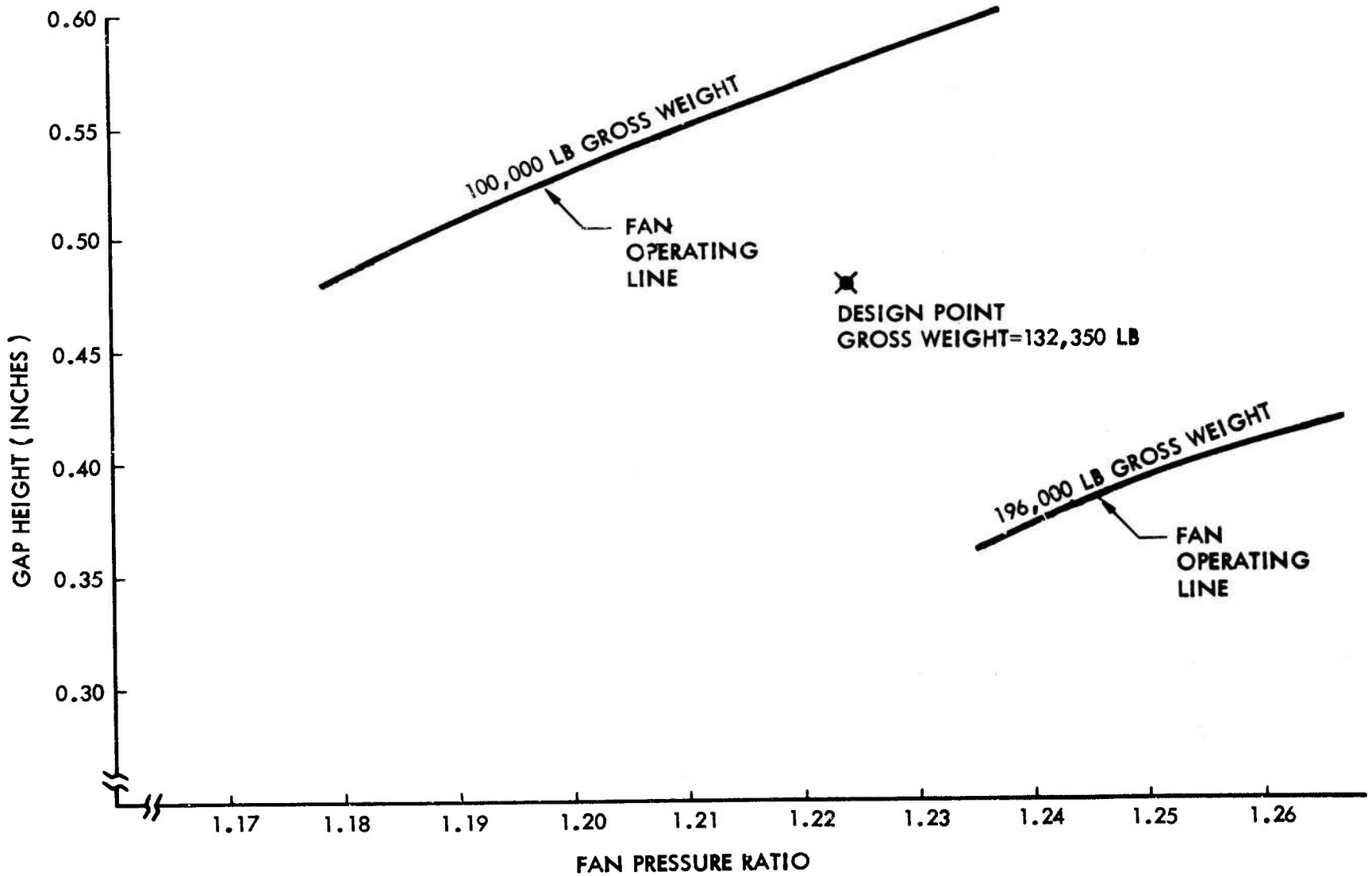

Figure 16: AIR CUSHION GAP HEIGHT

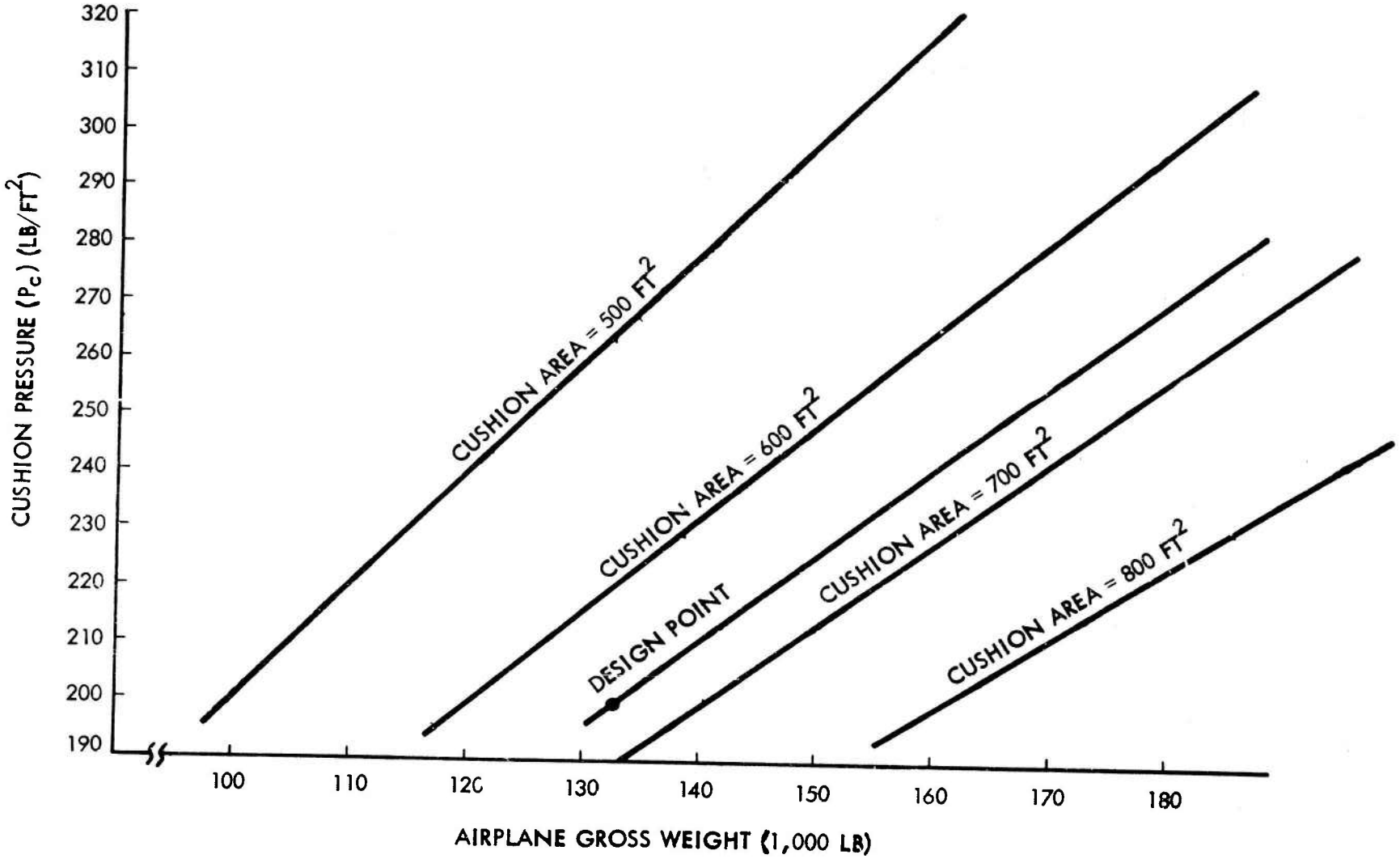

Figure 17: CUSHION AREA REQUIREMENTS

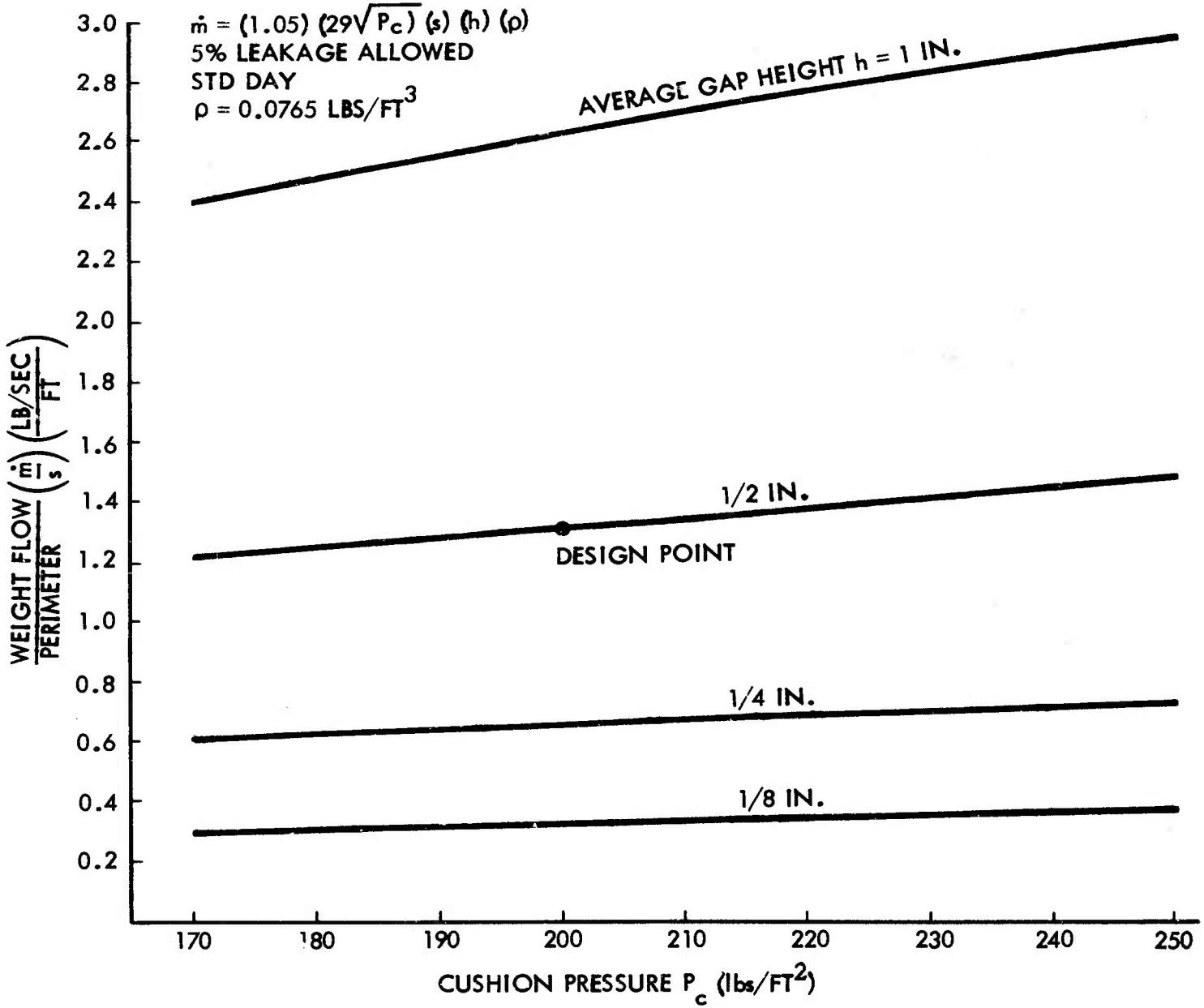

Figure 18: AIR FLOW VS. GAP HEIGHT (h)

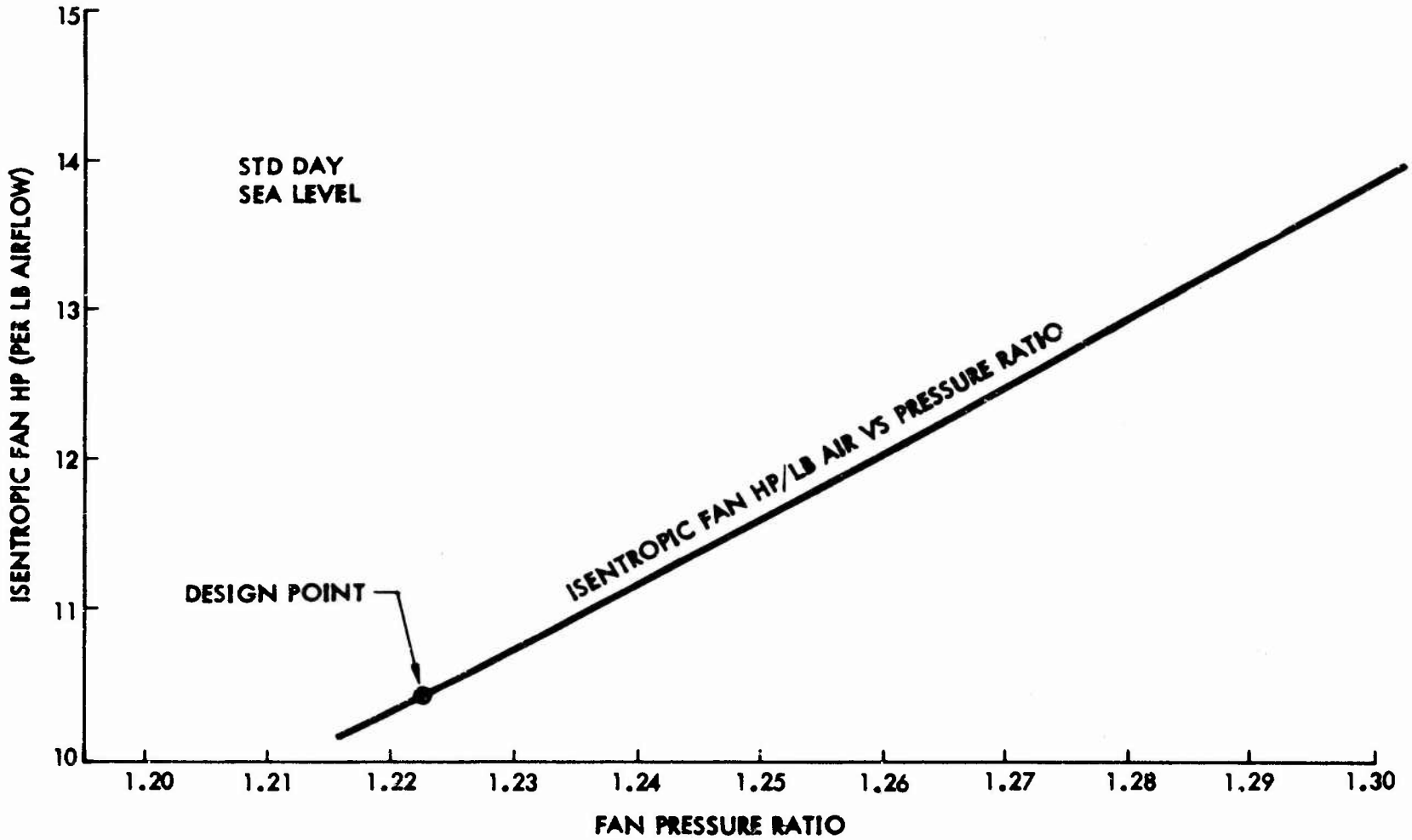

Figure 19: FAN HORSEPOWER REQUIREMENTS

Trunk Hole Sizing--

Trunk air velocity $(V_j) = C_D K \sqrt{\Delta P}$

where $C_D = 0.65$

$$\sqrt{\Delta P} = \sqrt{P_j - P_c/2}$$

$P_c/2$ = average pressure at discharge ports

V_j = 325 feet/second

area of jet $(A_j) = \frac{Q_c}{V_j} = \frac{1,700}{325} = 5.25 \text{ feet}^2 = 750 \text{ inches}^2$

for 3/8 in diameter holes:

$$A_{HOLE} = \frac{\pi D^2}{4} = 0.11 \text{ inch}^2$$

number of holes required $= \frac{750}{0.11} = 6,800$

Fan Calculations--

Fan flow = 68 pounds/second

$$\text{fan } P_R = 1.223 = (1 + \frac{\Delta P}{P_1})$$

$\gamma = 1.4$

$$\text{head rise (H)} = R \left(\frac{\gamma}{\gamma - 1}\right) T_i \left[\left(1 + \frac{\Delta P}{P_1}\right)^{\frac{\gamma-1}{\gamma}} - 1\right]$$

H = 5,741 feet

Fan tip speed $(U_T) = 0.866\, a_1$

a_1 = speed of sound at fan inlet
= 1,120 feet/second at 519°R

U_T = 970 feet/second

$$\text{Pressure coefficient } (\psi) = \frac{gH}{(U_T)^2} = \frac{(32.2)(5741)}{(970)^2} = 0.196$$

for $\psi \leq 0.3$ use single stage axial fan

$$D_{T(\text{fan tip dia})} = \sqrt{\frac{Q}{0.29U_T}}$$

$$D_T = 1.78 \text{ feet } \left(\frac{\text{Hub}}{\text{TIPDIA}} = 0.6\right)$$

$$\text{Annulus area (A)} = 0.16\,\pi\,(D_T)^2$$

$$A = 1.59 \text{ feet}^2$$

$$N_{RPM} = \frac{60U_T}{\pi D_T} = 10,407 \text{ rpm}$$

Efficiency calculation (axial fan)

$$n(\text{axial}) = \frac{1}{1 + \frac{K_3}{\psi} + \frac{K_4}{\psi 2}\left(1 + \frac{P_2}{P_1}\right)}$$

$$\left.\begin{array}{l} K_3 = 0.034 \\ K_4 = 0.00112 \end{array}\right\} \text{empirical}$$

n = 82% efficiency at design point.

6.1.2 Brake Analysis

Brake sizing is based on a brake surface load of 54,000 pounds (40 percent of design STOL gross weight). Dimensions were determined from scaling previous work accomplished for the C-115 and Navy F-8 airplanes. Nearly 14,000 inches^2 of brake area are provided, resulting in an average pressure of 3.85 psi on the braking surface at the design condition, with a corresponding cushion pressure of 120 psfg. Further reductions in cushion pressure result in greater pressure loadings on the braking surface. This braking action will produce significant temperature buildup in the brake pads.

Figures 20 and 21 are the computer plots from a computer transient analysis of a typical braking situation using both rubber and steel pads. Brake pressure was intentionally varied in the example and even reduced to zero (foot pressure removed) between 12 and 15 seconds to evaluate temperature response to transient inputs. For rubber, only about 30 percent of maximum brake pressure was applied initially due to the higher coefficient available.

The Boeing Engineering Thermal Analyzer (BETA) program using a one-dimensional nodal network analysis was used, along with the following assumptions:

1. Fifty percent of the energy generated at the pad/runway interface is transmitted into the pad.

2. No abrasion, tearing, or melting of the pad occurs (irrespective of the melting point of the pad material).

3. Engine thrust and aerodynamic drag are neglected when calculating the airplane velocity during brake application.

4. The maximum pad pressure (P_{max}) is 10 psi, and varies with time as shown on the Figures.

5. For rubber pads, the friction coefficient is a function of temperature only, and for 1020 steel pads, a function of sliding velocity only.

The temperature shown with the rubber pad is clearly unacceptable. A steel pad shows acceptable temperatures but has a low static coefficient of friction. Material with built-in thermal conducting elements to disperse the heat from the surface is required. Only a small amount (by weight) of conducting elements are needed.

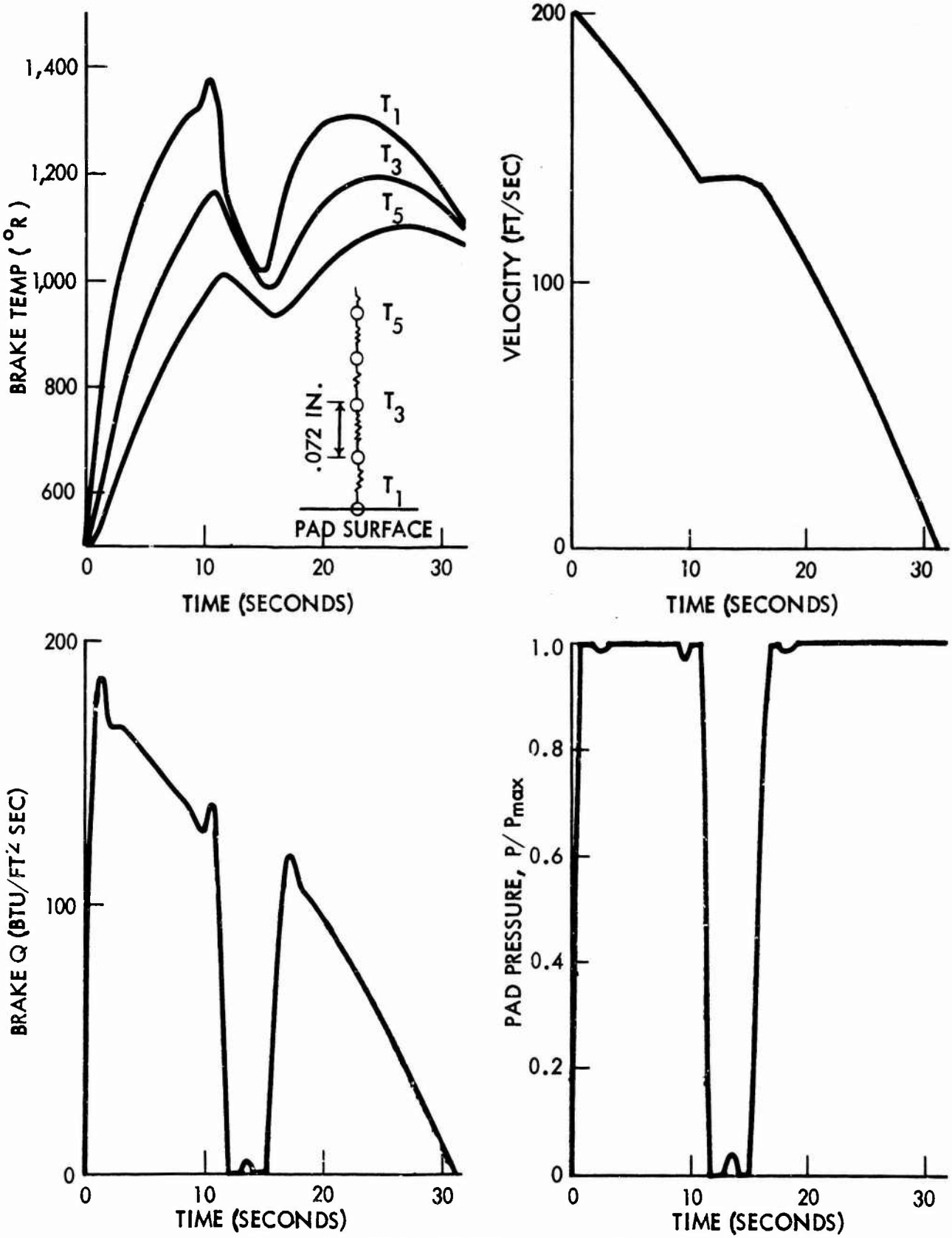

Figure 20: ACLS BRAKE TEMPERATURE - 1020 STEEL

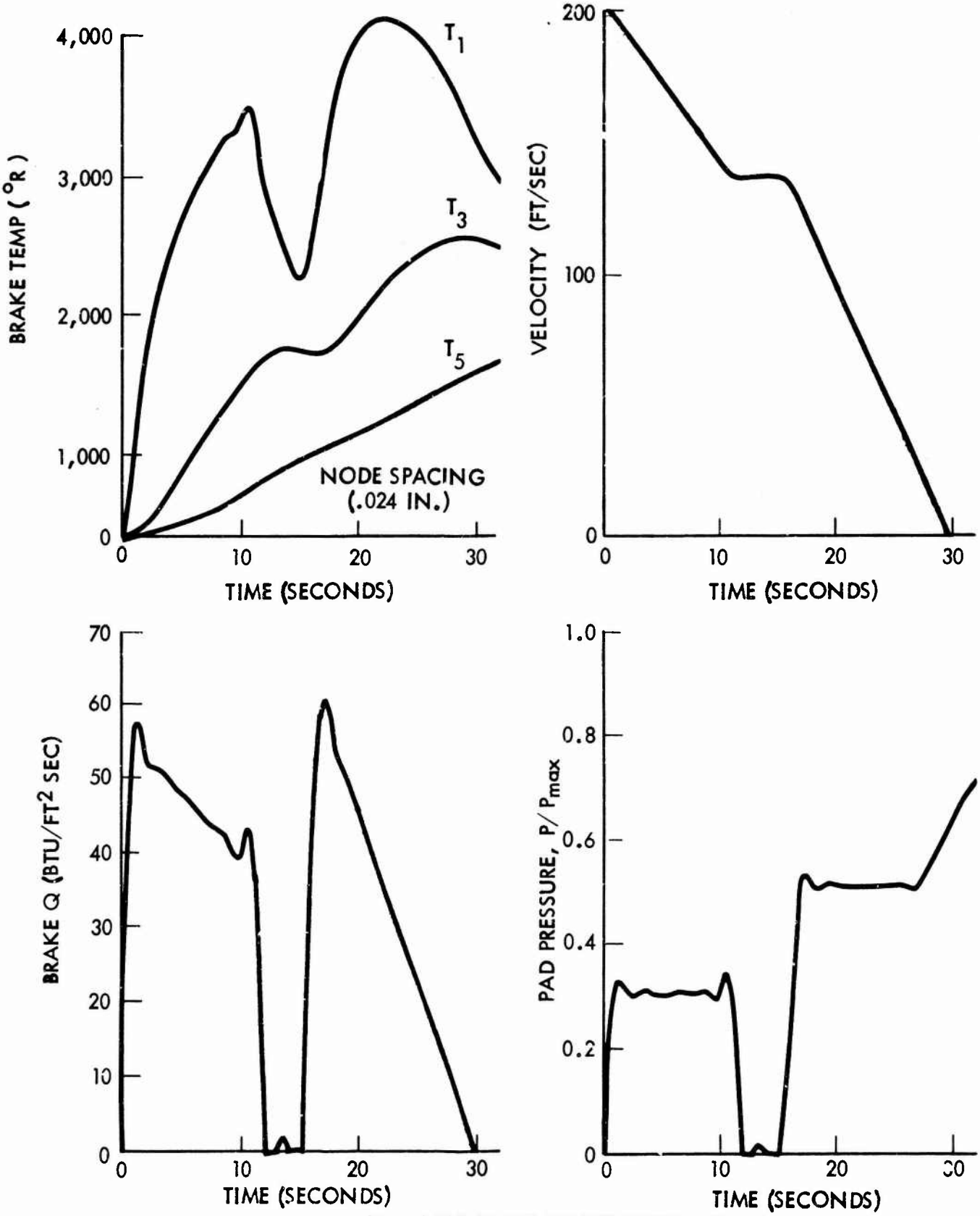

Figure 21: ACLS BRAKE TEMPERATURE - RUBBER

6.2 AERODYNAMIC ANALYSIS

Preliminary design estimates have been made to predict the effects of an air-cushion landing gear system (ACLS) on the performance and stability and control of the basic TAI configuration. In the following sections a comparison is made between the airplane using an ACLS and a conventional landing gear. A brief analysis of the airplane handling after touchdown is also included.

6.2.1 Configuration Analysis

The estimated lift and drag of the configuration with the air-cushion landing system is based on that of the baseline TAI airplane adjusted for the replacement of the gear with the ACLS. High-speed drag is reduced by $\Delta C_D = -0.0002$ due to the smaller frontal area of the ACLS in the stowed position (Figure 22).

In the high-lift configuration with the ACLS deployed there is no significant effect on lift. The drag is increased by $\Delta C_D = 0.0023$ above that of the extended conventional landing gear (Figure 23). These estimates are based on USAF furnished information on the ACLS/C-115 installation.

The low speed lift and pitching moment characteristics are shown in Figure 24. The destabilizing neutral point shift due to the air-cushion trunk was estimated to be about 3.5 percent of MAC.

The changes in the static lateral/directional stability derivatives are presented in Figure 25. The effects of the ACLS on all these derivatives are considered small.

6.2.2 Performance

The incorporation of the Air Cushion Landing System into the TAI baseline airplane (953-801B) produces two effects:

1. A net gross weight saving resulting from subsystem trades of 5,640 pounds (based on GW = 145,440 pounds for 953-801B).

2. A reduction of the takeoff distance by 350 feet due to elimination of rolling friction (μ = .10, per TAI rules).

The takeoff distance increment may be transformed into an additional weight saving by resizing the airplane with the ACLS to the TAI design takeoff distance. When this is done, gross weight is further reduced, and the configuration is defined by the following parameters:

Initial TOGW	=	135,360 pounds (ΔGW = -10,080 pounds)
Midpoint STOL Wt	=	123,200 pounds
Wing Area	=	1550 feet^2
Thrust/Engine	=	15,420 pounds (SL Static Rating)

An important requirement underlying the stated takeoff and landing performance under the TAI rules is an airplane pitch attitude of 7 degrees relative to the ground at liftoff and touchdown. The ACLS cushion configuration and location is compatible with this amount of rotation.

The takeoff performance of the 953-801 airplane and the effect of adding the ACLS to the 953-801 and redesigning the 953-801 to take advantage of TAI rules (TAI design takeoff field length) with the ACLS is illustrated in Figure 26.

Landing distances are the same for both configurations based on a ground rule that the braking coefficient (exclusive of thrust reversing) was .25. With the ACLS where the normal force on the brakes is assumed to be 40 percent of the airplane gross weight, a brake surface friction coefficient of approximately .625 would be needed. This is attainable with the available materials.

6.2.3 Airplane Handling After Touchdown

The air cushion landing gear has little or no sideforce capability and sideforce can be applied to the airplane only while the brakes are applied. This requires special pilot control techniques after touchdown and during taxiing in a crosswind due to large sideslip angles that may develop. A combination of braking and differential throttling must be used to control the airplane after it becomes cushionborne.

In order to keep the sideslip angle below a given value the heading angle has to be changed as the airplane slows down. The heading angle requirements for a given controllable sideslip angle have been derived in Figure 27. The results are presented in Figure 28. It is seen from this figure that if only small sideslip angles can be controlled the airplane has to be headed almost directly into the wind as it reduces its speed.

The brake pads are generally located aft of the c.g., generating a moment which tends to align the airplane with its track over ground. Balancing these moments and turning the airplane is achieved by differential throttling of the engines. A rapid moment response to control inputs is, therefore, required. The latter requirement led to a complete redesign of the C-115 (Buffalo) propeller pitch control, and also needs special attention on the TAI configuration. Some better means of providing

sideforce to the airplane is obviously needed. Figure 29 depicts a concept whereby a lightly loaded wheel could be used to generate sideforce without introducing undue loads into the structure.

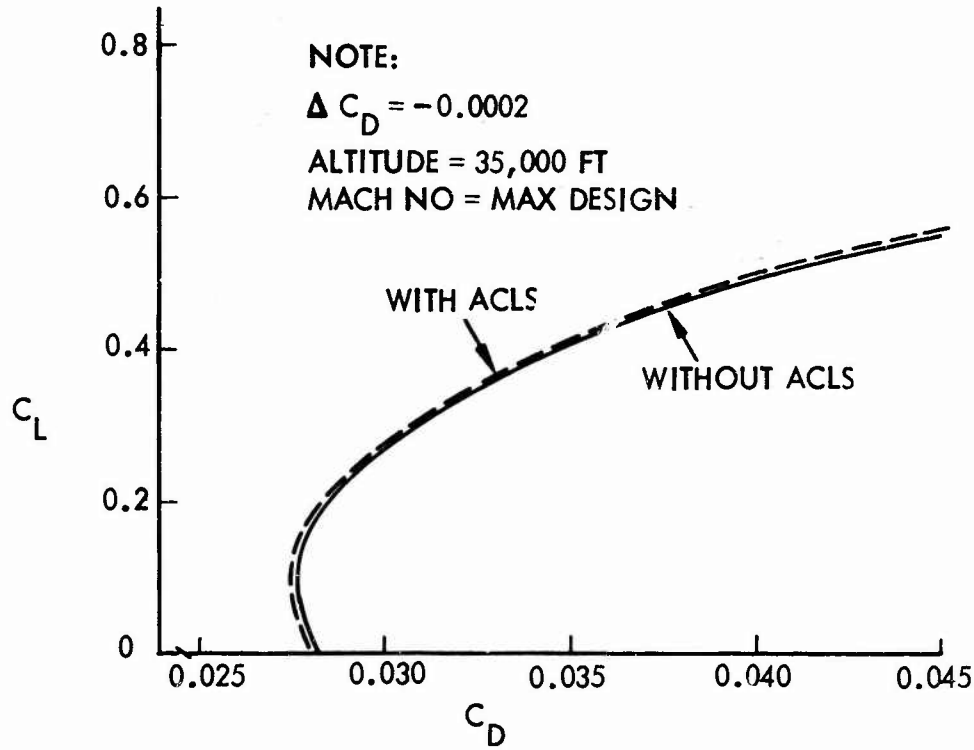

Figure 22: HIGH-SPEED DRAG POLAR

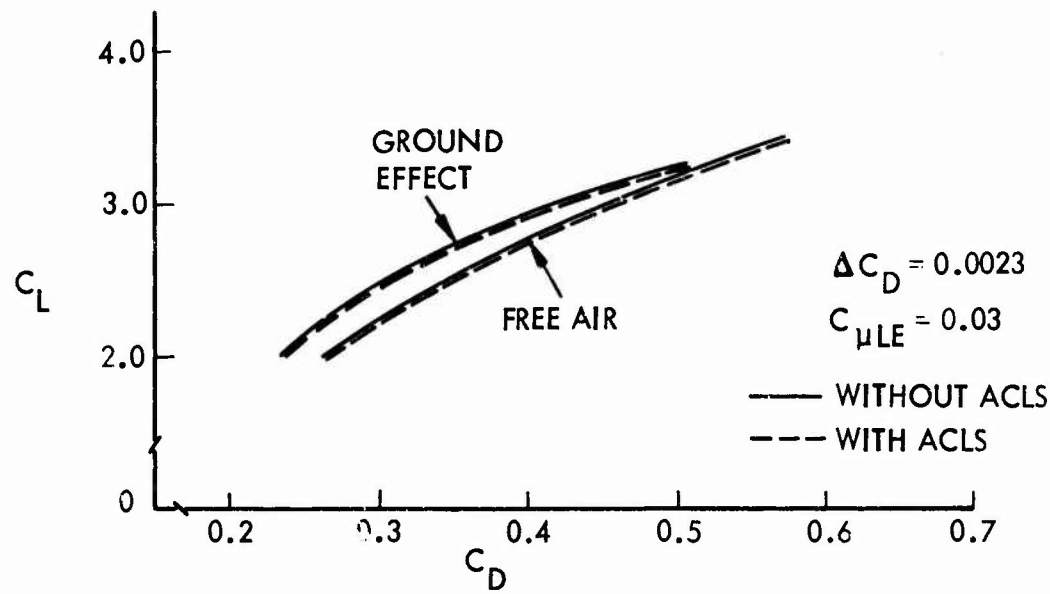

Figure 23: TRIMMED LOW-SPEED DRAG POLARS

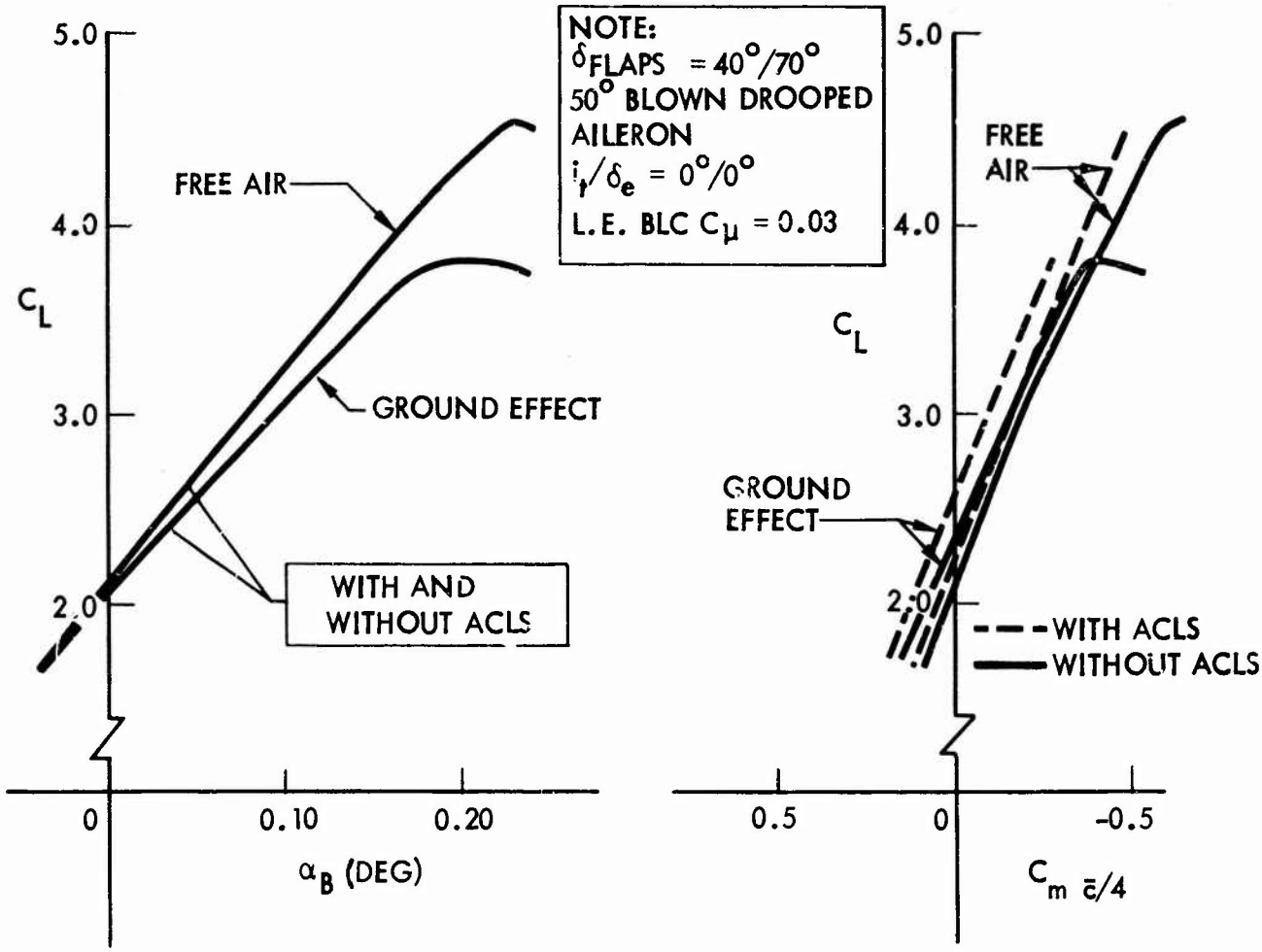

Figure 24: LONGITUDINAL AERODYNAMIC CHARACTERISTICS

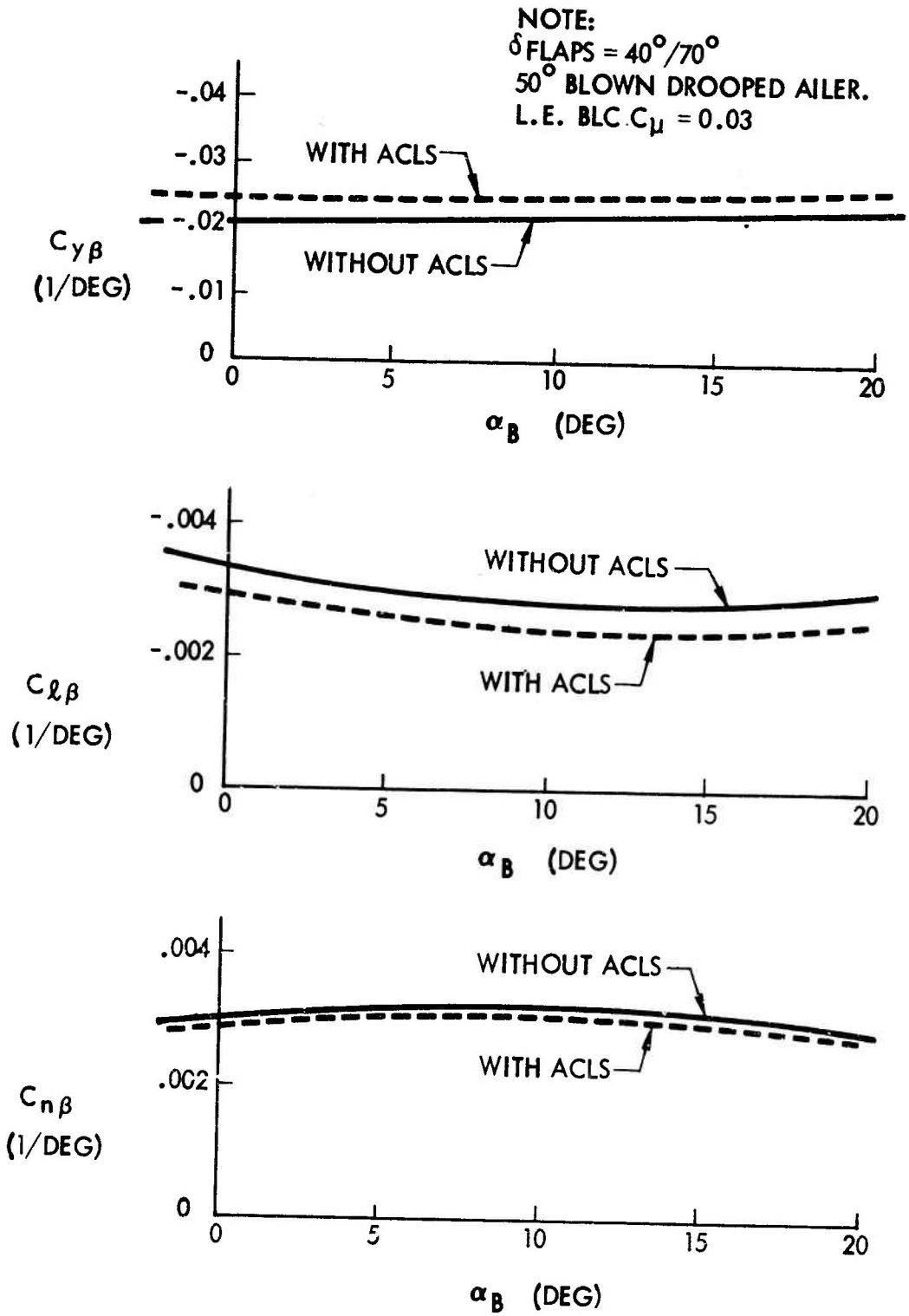

Figure 25: LATERAL/DIRECTIONAL STABILITY

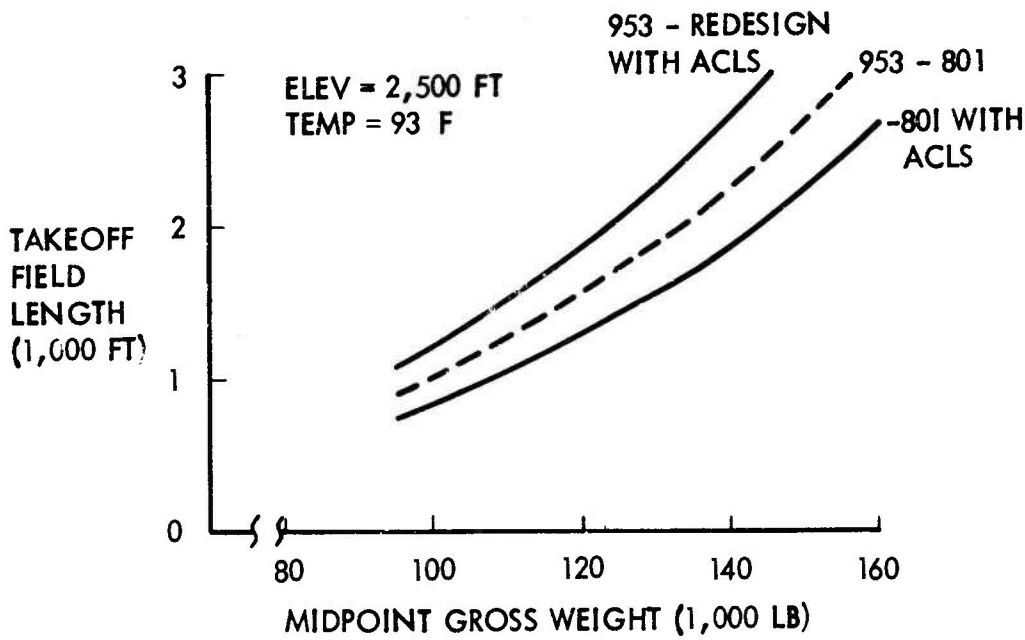

Figure 26: TAKEOFF PERFORMANCE

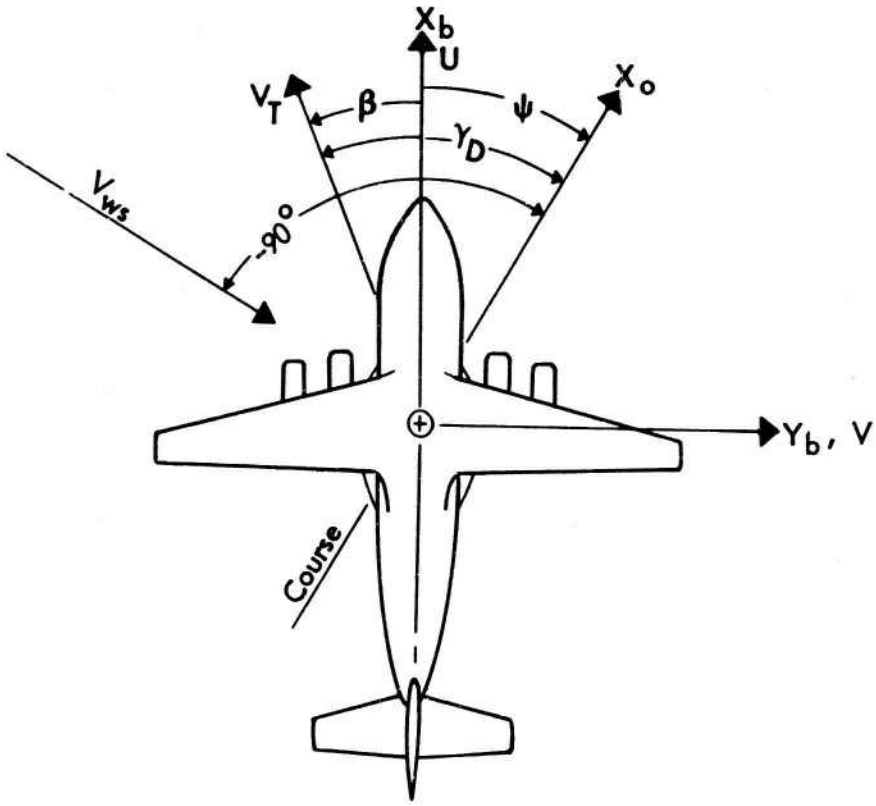

AIRPLANE VELOCITIES AND ANGLES

RELATIVE VELOCITIES:

$$U_A = U - U_W$$

$$V_A = V - V_W$$

WIND VELOCITIES

$$U_W = V_{WS} \sin \psi$$

$$V_W = V_{WS} \cos \psi$$

TOTAL VELOCITY:

$$V_T^2 = U_A^2 + V_A^2$$

SIDESLIP ANGLE:

$$\sin \beta = \frac{V_A}{V_T}$$

HEADING ANGLE REQUIRED:

$$\sin(-\psi) = \frac{V_T \cos \beta - U}{V_{WS}}$$

Figure 27: DERIVATION OF HEADING ANGLE REQUIREMENT

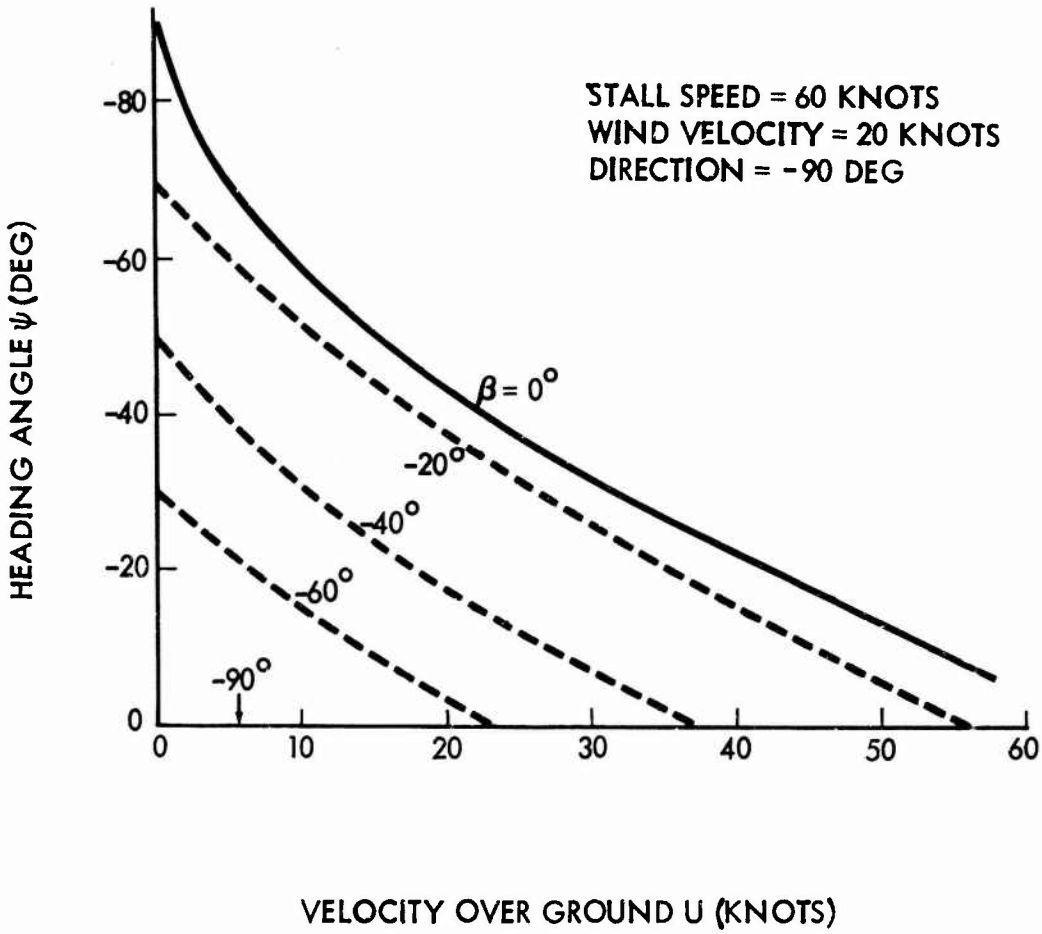

Figure 28: AIRPLANE HEADING IN CROSS WIND

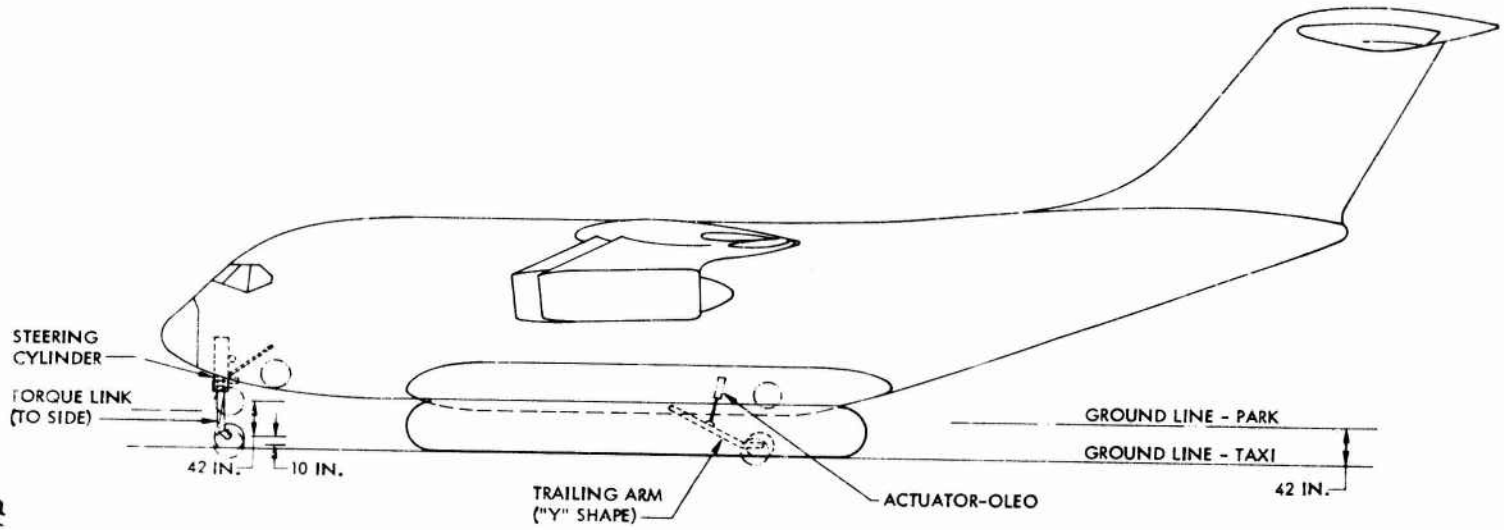

NOSE WHEEL:

AIR OLEO-EVACUATE FOR PARKING AND RETRACTION.
CONTROL AIR PRESSURE TO LIMIT VERTICAL LOAD TO 10,000 LB EXCEPT WHEN BOTTOMED OUT IN PARKING MODE.
RELIEF VALVE IN STEERING SYSTEM TO LIMIT SIDE LOAD TO 10,000 LB.
33x9.5-16 TIRE (SINGLE)

AFT WHEEL

AIR OLEO-EVACUATE FOR RETRACTION
LIMIT AIR PRESSURE TO LIMIT WHEEL LOAD TO 10,000 LB.
33x9.5-16 TIRE (SINGLE)

Figure 29: WHEELED SIDEFORCE PRODUCER CONCEPT

6.3 STRUCTURAL ANALYSIS

The loads on the landing gear must be established before structural requirements can be estimated. Landing gear loads can conveniently be divided into those due to landing impact and those due to ground operations. This discussion covers these two actions.

6.3.1 Landing Impact

Criteria--The landing gear must arrest the airplane at its maximum descent rate when landing at its STOL landing weight without causing stresses exceeding the design limit. At the landplane landing gross weight this becomes 10 fps and at the maximum landing gross weight the rate of descent is 6 fps. The design of the baseline gear is based on not exceeding an incremental load factor of 2.

Discussion--The ACLS represents an advance in the state of the art because only one example has been demonstrated in a limited flight test program. The flight test of the Bell LA-4 test vehicle is reported in References 4 and 5 for land and water operation. Only low-sink-speed landings were performed and the instrumentation was too meager to indicate anything significant. The design landing impact must therefore be analyzed using drop tests data reported in References 6 and 7. References 8 and 9 deal with the static hover situation in a theoretical manner.

The drop tests of References 6 and 7 were conducted with zero forward velocity on the configuration shown in Figure 30. The trunk tested in Reference 6 was constructed of the one-way stretch elastic material which wraps around the belly of the fuselage when the air supply is shut down. The trunk tested in Reference 7 was preformed from rubberized nylon in the equilibrium inflated shape. The Reference 6 tests all started with the trunk in a level attitude at the required drop height while initial pitch and roll angles were included in the Reference 7 tests.

Limited time histories presented in the references show that the landing impact is absorbed by deflecting the trunk to provide stroke and rapidly increasing both trunk and cushion pressures due to restricting the flow through the peripheral jet nozzles and trapping the air in the cushion. A sample time history is found in Figure 31 where the test article had some initial inclination. It can be seen that the inclination is reduced during touch down indicating that some of the energy is absorbed in leveling the test article.

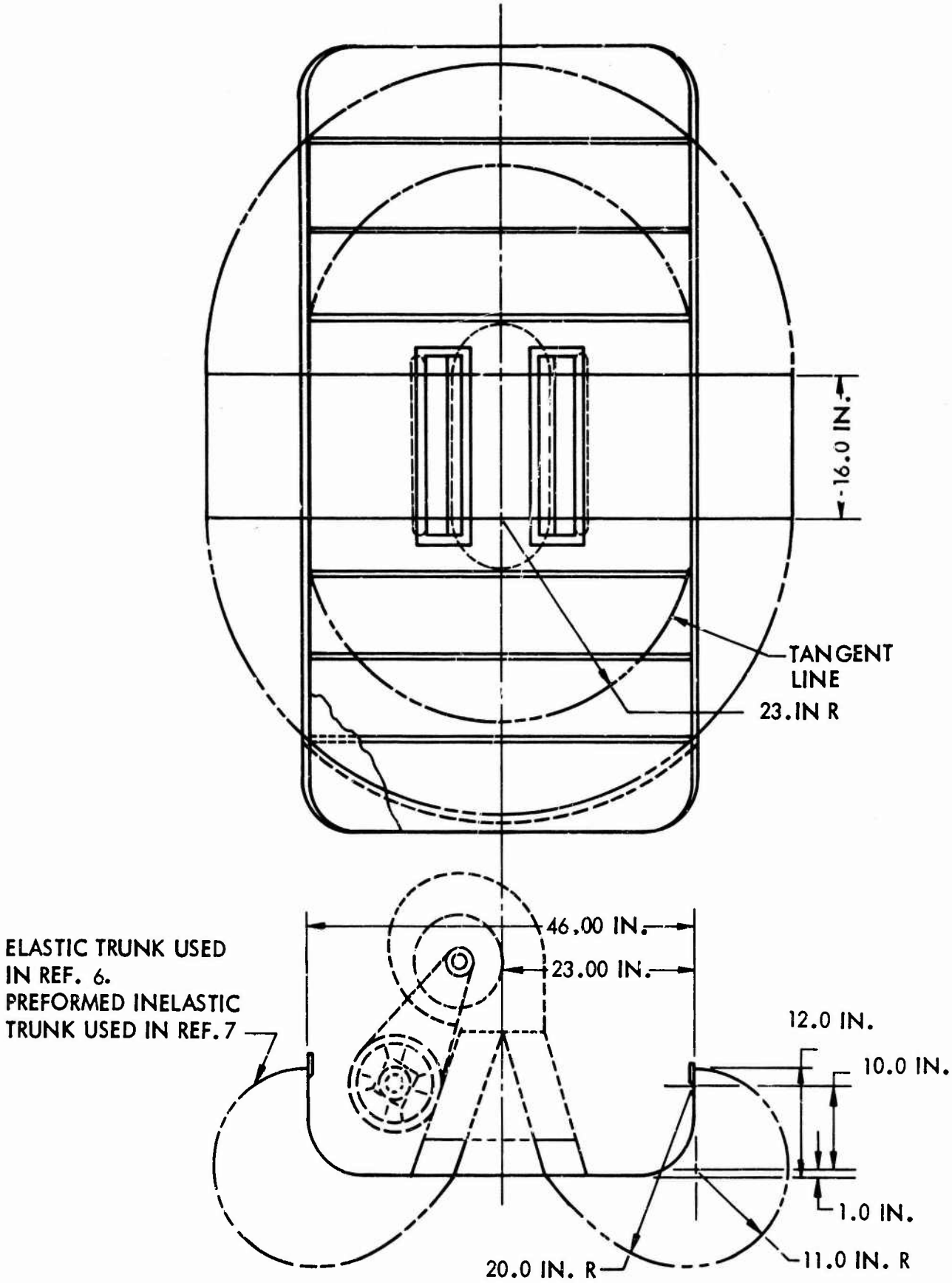

Figure 30: DROP TEST SPECIMEN

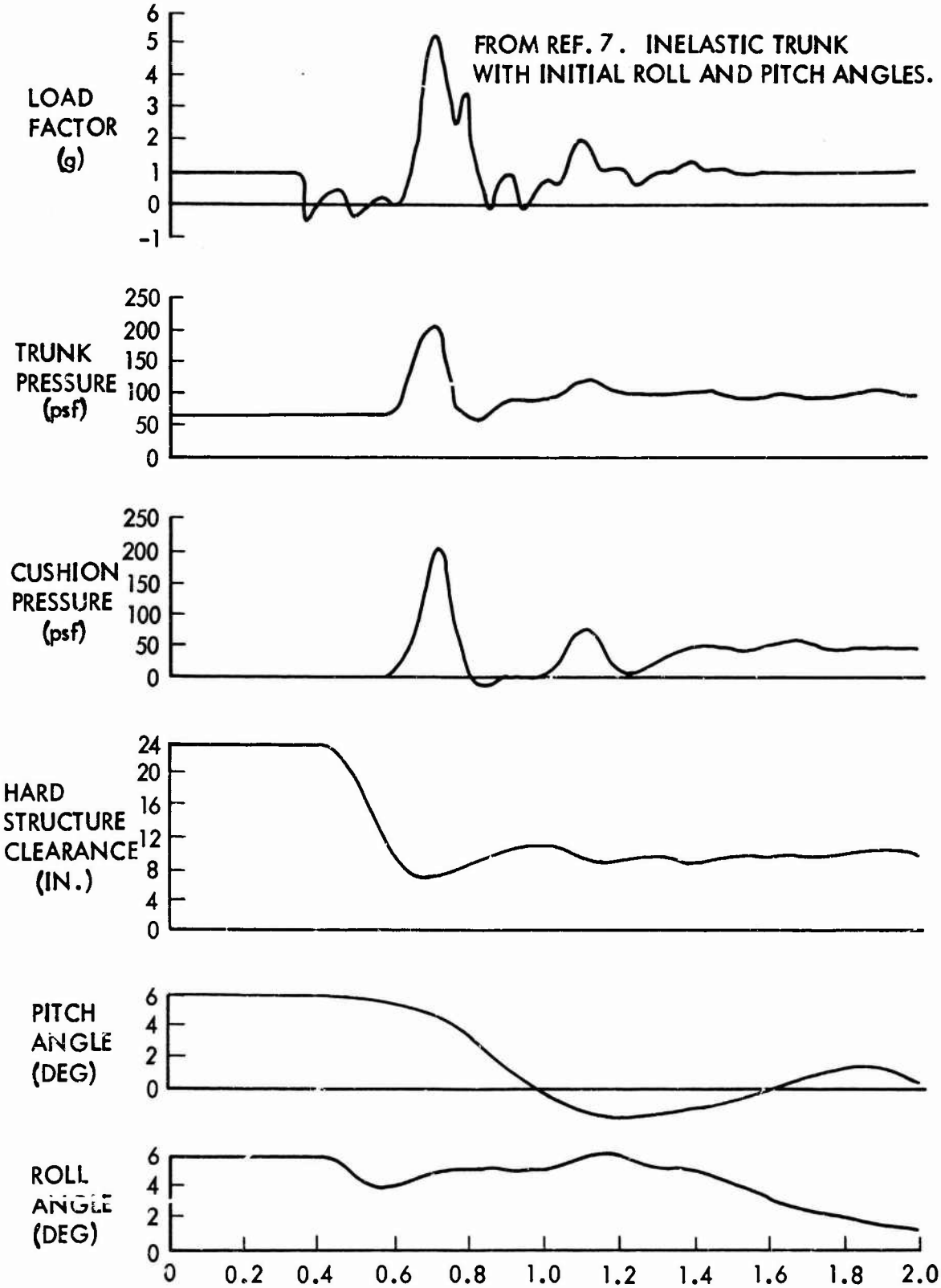

Figure 31: DROP TEST TIME HISTORY

The most important parameters in trunk sizing are the peak load factor and the stroke that determines the hard structure clearance required. Data from Refs. 6 and 7 are presented in Figures 32 and 33. Data in Ref. 6 is given in terms of drop height with a few corresponding sink speeds which agree with the impact velocity of a falling mass. Sink speed values for Ref. 6 data used in Figures 32 and 33 have been computed from drop heights. Ref. 7 contains tabulated values of sink speed and drop height and, therefore, these have been used directly in Figures 32 and 33 in spite of the fact that the given sink speeds are somewhat lower than would be expected from a falling body.

Looking first at load factor, Figure 32 shows that with no initial inclination the inelastic trunk gives greater load factors than the elastic trunk. This effect is noted in Ref. 7 although the difference is not as large as when the comparison is based on drop height. It seems likely that the additional stiffness of the inelastic trunk is due to the semicircular ends which must deflect in a circumferential direction to take up the shape associated with higher load factors. As would be expected, the peak load factor is reduced with initial inclination as part of the energy is absorbed in leveling the test article.

The load factor-stroke product is plotted against the square of the sink speed in Figure 33 as a comparison of the area under the load-stroke curve with the absorbed energy. Lines are drawn among the data for shock absorption efficiencies of 43 percent and 75 percent. If the sink speeds from Ref. 7 are indeed on the low side the inclined drop tests would show a higher efficiency. For the purpose of this study a conservative efficiency of 43 percent has been assumed.

No attempt has been made to predict time histories of landing impact because it is apparent from the drop tests that the shock absorption must include the effects of orifice restriction, size of the air cavity, fan characteristics, trunk material, and cushion air compression and is beyond the scope of this study.

However, we have assumed that pressure rises similar to Figure 31 would be experienced and the proposed system (structure, cushion, and fan) are capable of handling such momentary pressures.

Trunk Size--The minimum trunk depth using a 43 percent efficiency was determined to be 48.75 inches. A depth of 50 inches was subsequently used.

Peak Load Factor--Referring back to Figure 32, it can be seen that the peak load factor is greater during a level drop than one with initial inclination. The trunk depth has been decided on the basis of an inclined drop and the maximum allowable load factor. In order to avoid structural damage to the airframe it would seem advisable to limit the peak trunk pressure by means of spring loaded relief valves unless the fan stall characteristics give sufficient relief. This is an area requiring more consideration during detail design.

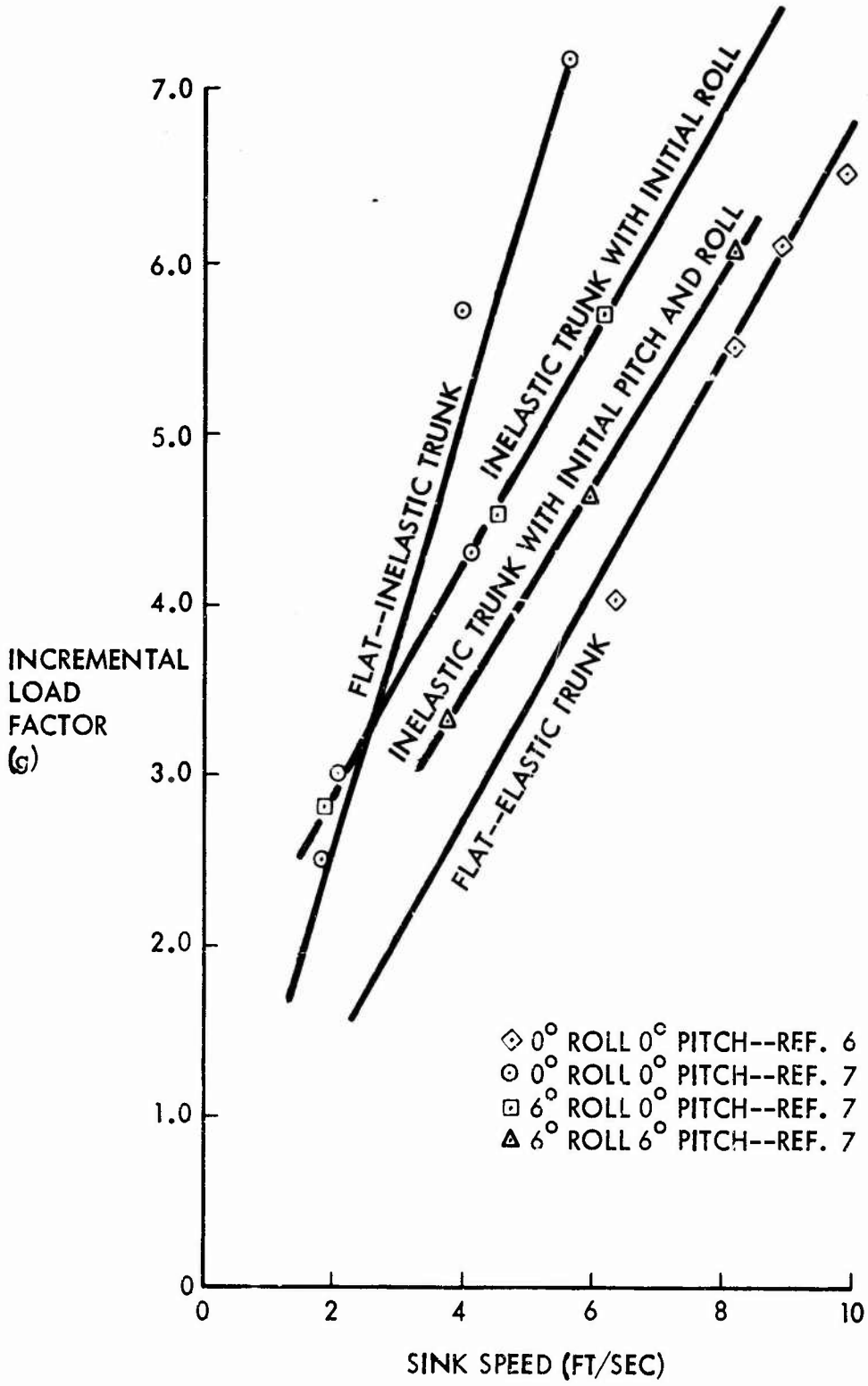

Figure 32: INCREMENTAL LOAD FACTORS FROM ACLS MODEL DROP TESTS

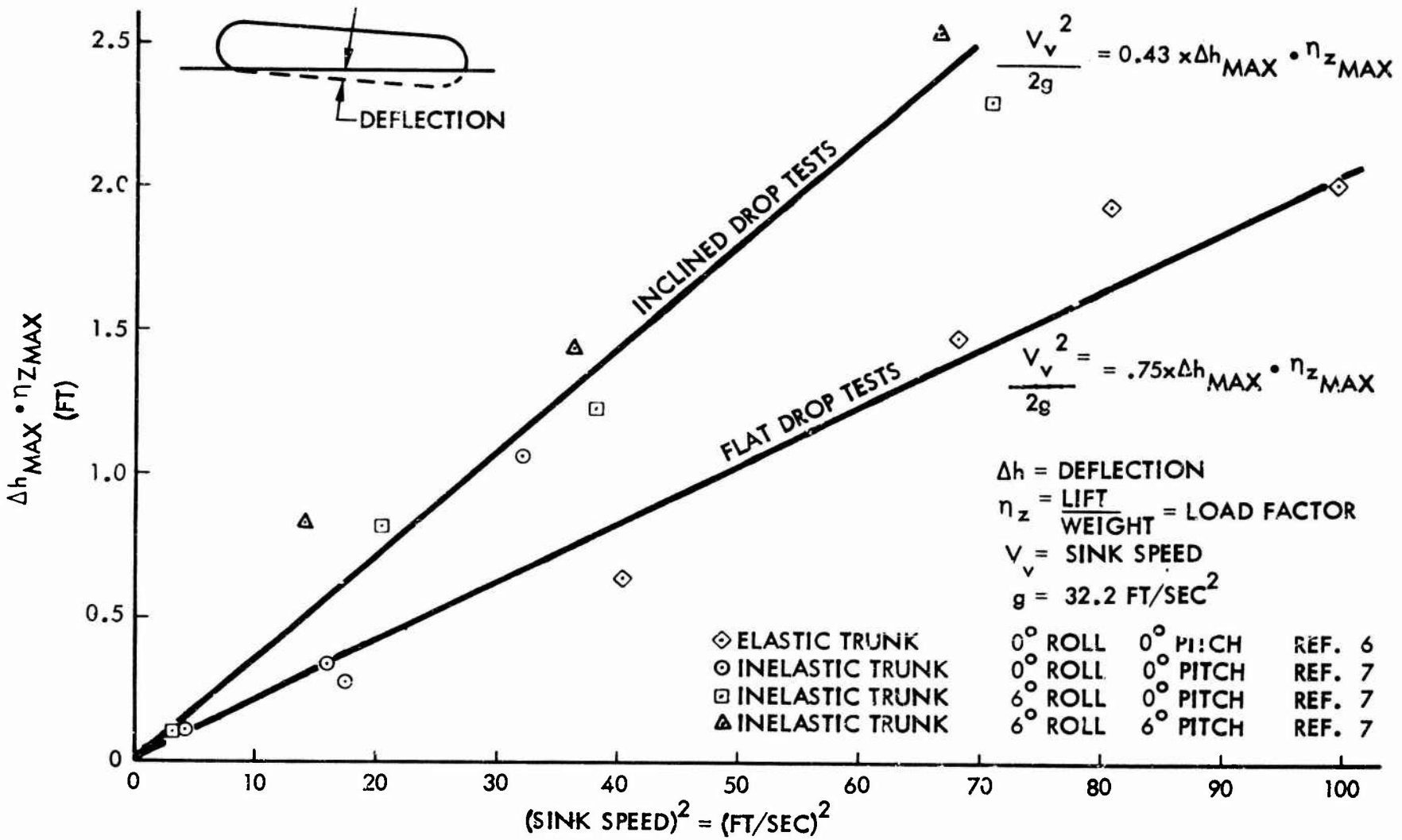

Figure 33: TRUNK ENERGY ABSORPTION

6.3.2 Ground Operation

Criteria--The baseline airplane must be able to operate from runways having flotation characteristics of CBR6. In addition the baseline configuration is designed to operate from semiprepared fields having one and two bumps of a (1-cosine) shape and of the dimensions shown in Figure 34 taken from MIL-A-008862A (USAF). Other ground characteristics such as small ditches, tree stumps, or rocks are not amenable to analytical treatment. The ability to negotiate such obstacles is dependent upon the geometry of the trunk and the airflow and is more a capability to be demonstrated than to design for. The ACLS must support the aircraft on unprepared fields at the midpoint STOL weight of 123,200 pounds. In addition, operation is necessary from prepared runways at gross weights up to 190,000 pounds. It is assumed that a lower gap height is permissible on prepared runways. Further, the airplane cg is located between 29 and 45 percent of the mean aerodynamic chord.

Trunk Characteristics--To evaluate the trunk characteristics it is assumed that the ACLS is in equilibrium under the weight of the airplane with the cg positioned at the cushion centroid with nominal cushion pressure and trunk pressure. If the weight is slowly increased while the trunk pressure and cushion pressure are held constant, deflection will occur. This tendency is called the heave stiffness of the trunk. Two-dimensionally, the trunk will deform as shown in Figure 35(a), assuming negligible material elasticity. However, the radial movement of elements of the material will stiffen the trunk around the ends, thus a more realistic deflection mode is shown in Figure 35(b) derived from the equilibrium hover shape of Figure 35(c). It is important to know the deflected shape since the heave stiffness is derived from the action of the trunk pressure on the ground footprint. Tests have shown that the air film from the peripheral jet orifices provides satisfactory lubrication and tread wear does not take place.

If a moment is applied to the hovering trunk, either in roll or pitch, there will be a corresponding restoring moment. Once again the available published tests on ACLS are not sufficient to understand the phenomenon. If the ACLS height is unchanged, one end of the trunk will lift off allowing the cushion air to escape. A small amount of liftoff may be permissible while still maintaining some cushion pressure. No systematic test data is available on which to base an analytical approach, so pitch and roll stiffnesses have not been estimated beyond the point of liftoff. Moment and force is put to zero beyond this point. This method has been programmed on a Hewlett-Packard desk calculator and is described in Reference 10.

$$\text{TERRAIN PROFILE} = \frac{H}{2}\left[1 - \cos\frac{2\pi}{L} \cdot (X - X_1)\right]$$

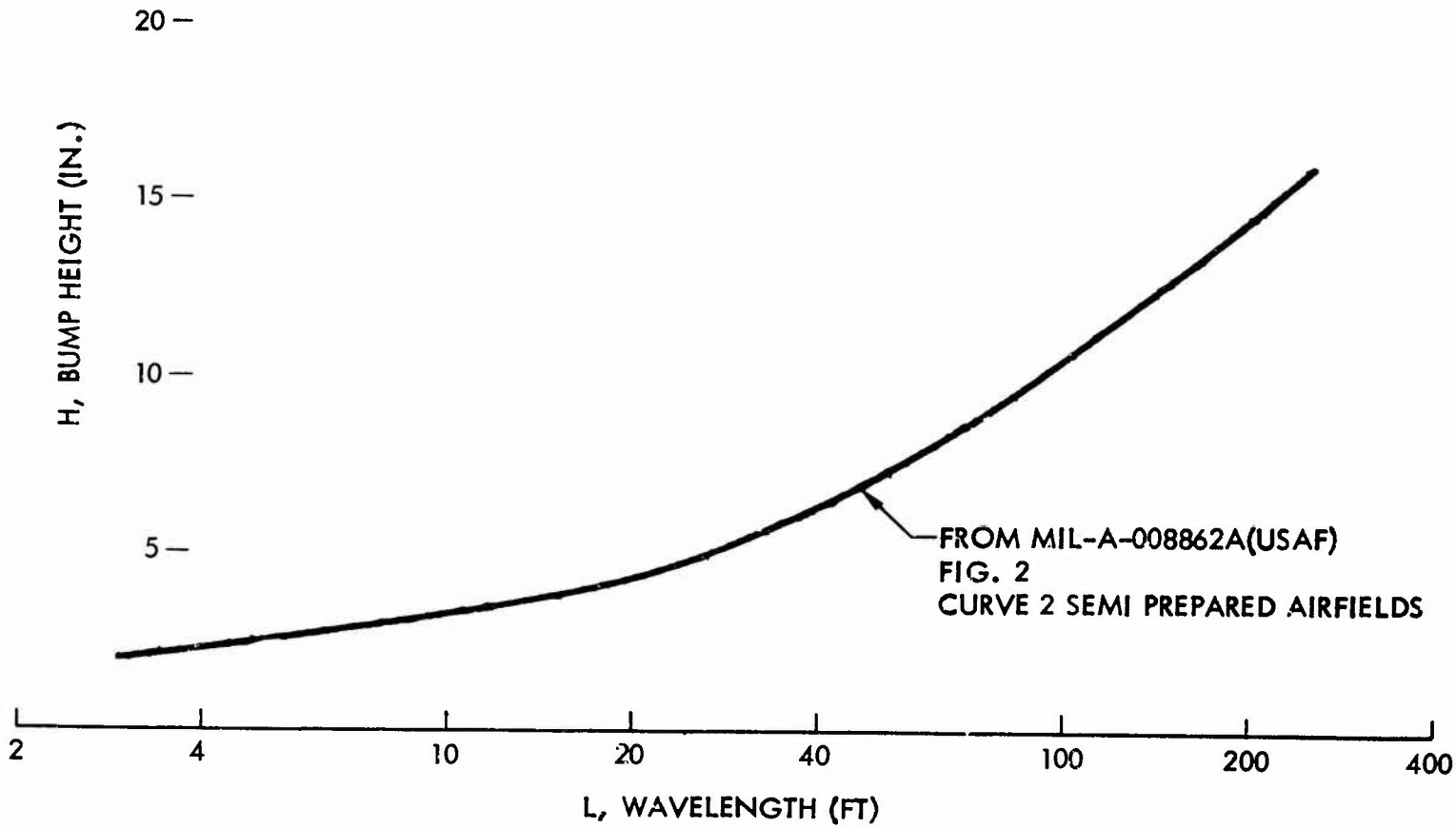

Figure 34: DIMENSIONS OF (1-COSINE) BUMPS

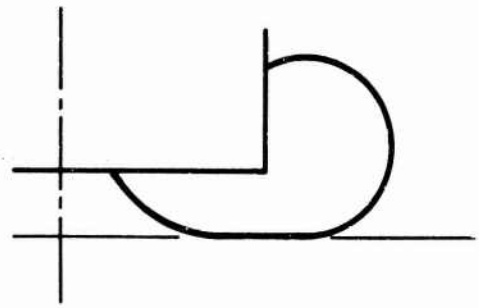

(a) 2- DIMENSIONAL DEFLECTED SHAPE

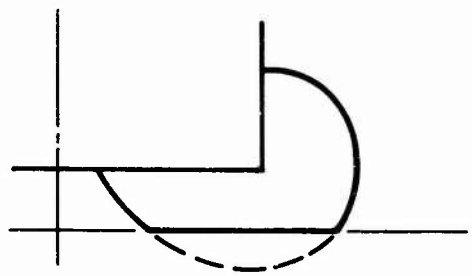

(b) DEFLECTED SHAPE WITH
NO RADIAL MOVEMENT

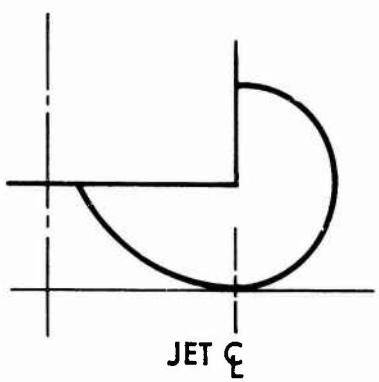

(c) HOVERING SHAPE

Figure 35: TRUNK SHAPES

Roll, pitch, and heave stiffnesses are estimated from the deflected trunk cross section at the center of segments around each end as shown in Figure 36. The results are presented in carpet form in Figures 37 through 40.

Static Stability--Due to the liftoff problem it is not possible to predict the pitch and roll stability analytically. It can be seen from Figures 37 and 38 that with the above assumptions 1g lift only happens at zero pitch and roll angles. Other possible combinations of deflection and inclination occur in the unknown area involving liftoff.

The 2g curves in pitch and roll are shown in Figures 41 and 42 together with the overturning moment showing that the ACLS is statically stable. The nonlinearities in the system preclude further analysis at this point.

Taxi Analysis--The performance of the airplane over the required runway profiles of Figure 34 has been investigated using the trunk characteristics predicted above. The equations of motion are found in Figure 43 and they are solved using the problem oriented language MIMIC on a CDC 6600 computer. A variety of initial conditions are possible depending on the manner in which the ACLS handles a center of gravity which is not on the centroid of the cushion. The selected cushion geometry is arranged so that 60 percent of the cushion area is forward of the airplane mid-cg point. In the present analysis the moment unbalance is reacted aerodynamically because the airplane always has an initial forward velocity. Systematic experimental data is required to determine how an off-center cg is reacted by the trunk, how the trunk deforms, and what increase in ground friction is experienced. This problem is unique to single-cell air cushions since conventional hovercraft have several cells divided by keel members and can maintain differential pressures in the cells.

Taxi analysis results are presented in Figure 44 for the airplane traversing three types of bumps at 30, 50, and 80 knots. No comparable results are available for a conventional gear, but past experience has shown the difficulty of predicting airplane motion near takeoff speed. In the present study this is further complicated by the assumption that trunk force and moment goes to zero when part of it lifts off. The effects of the sudden large rotational accelerations are shown in Figure 45. The reference point loci are terminated in Figure 44 when the airplane motion has become indeterminate. The taxi analyses show that the airplane can traverse the required terrain without encountering excessive trunk loads.

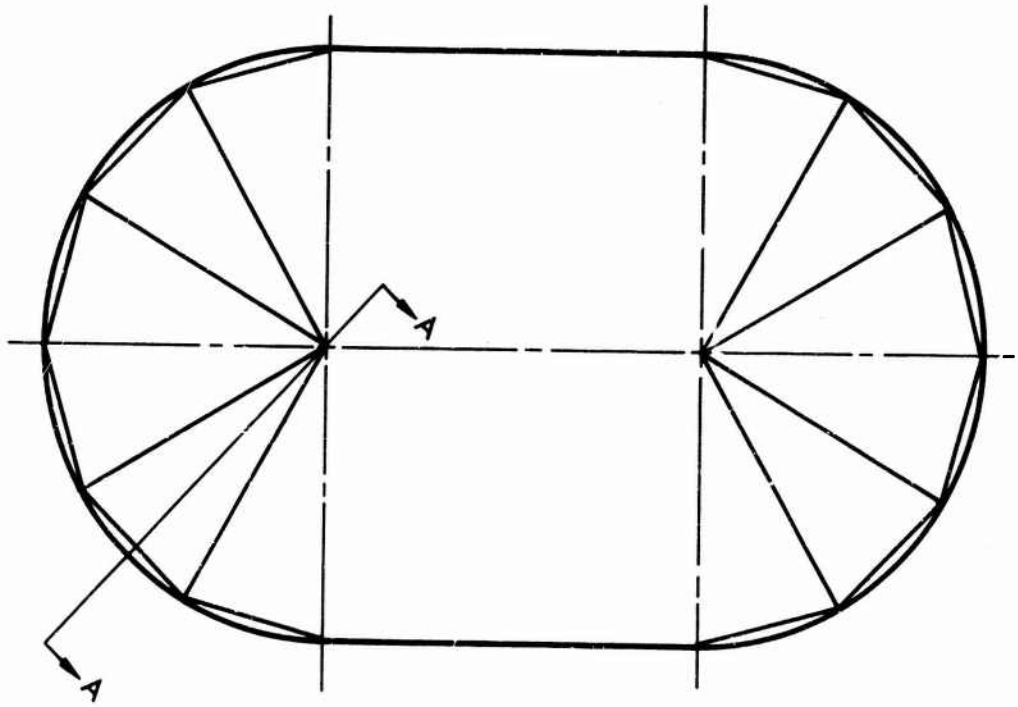

TRUNK SEGMENTS FOR TILTED ANALYSIS

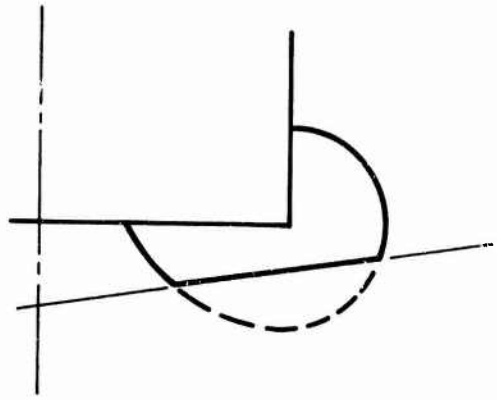

DEFLECTED SHAPE AT SECTION AA

Figure 36: TRUNK SHAPES USED IN STIFFNESS CALCULATION

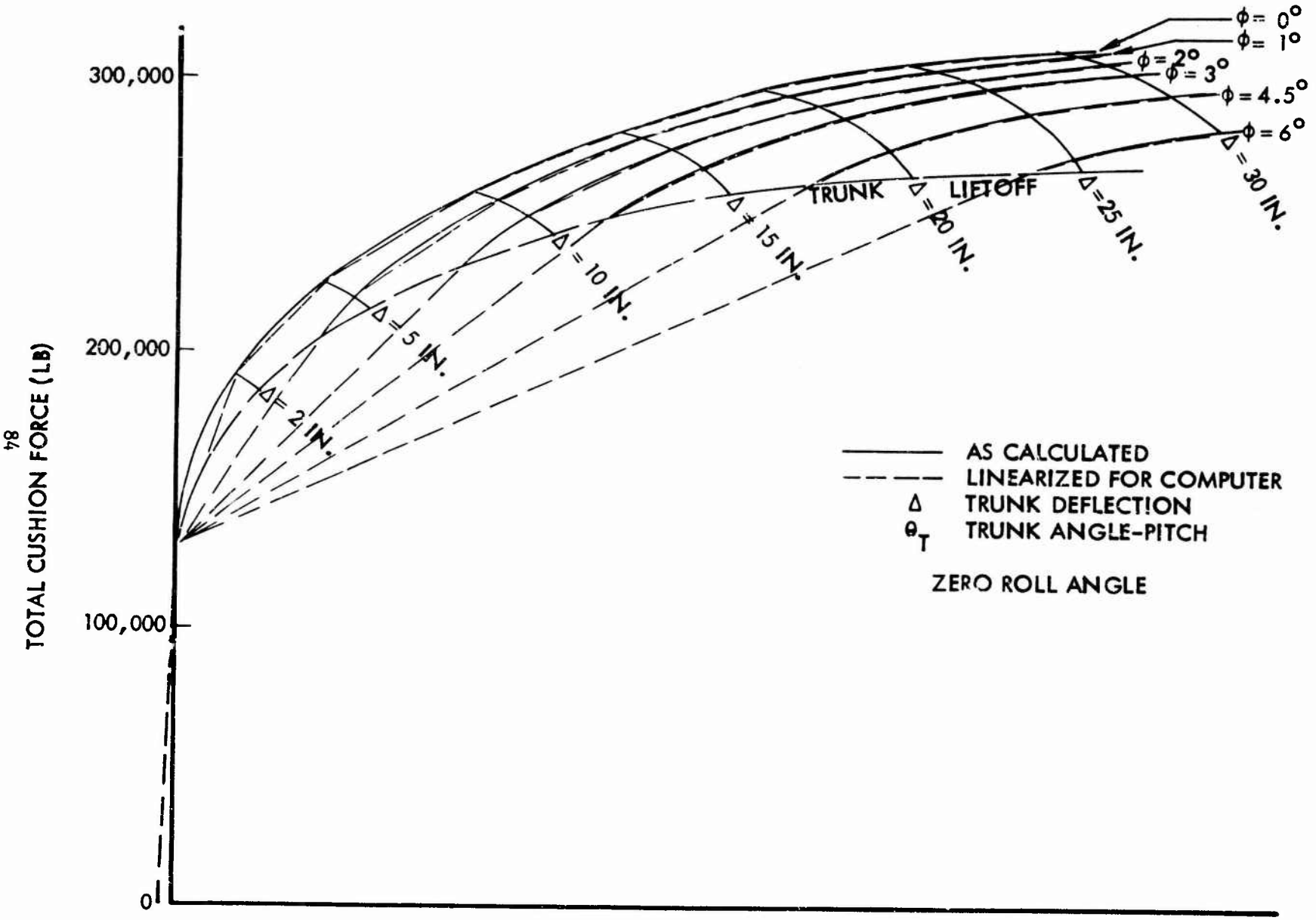

Figure 37: VARIATION OF STATIC CUSHION FORCE WITH PITCH ANGLE

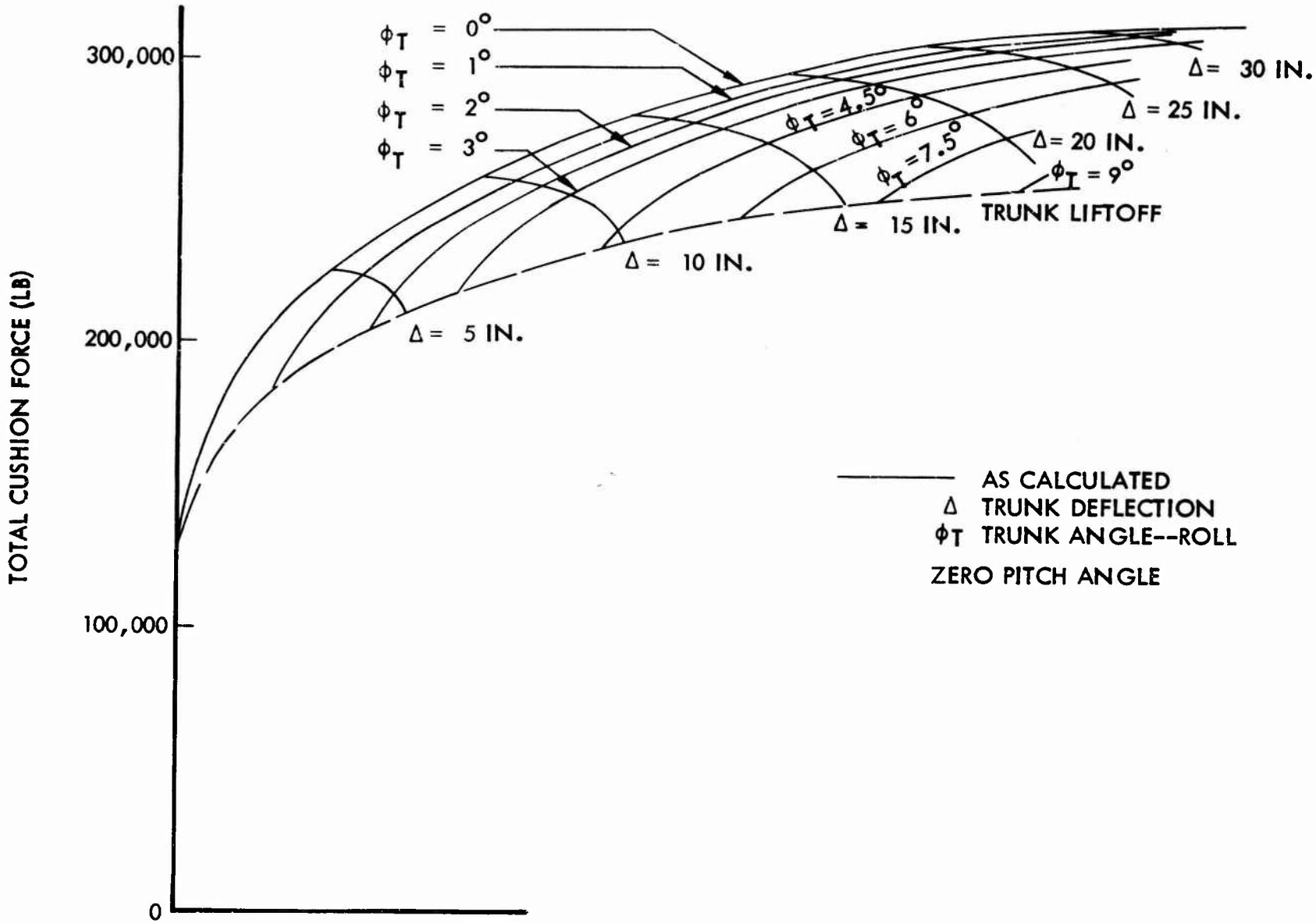

Figure 38: VARIATION OF STATIC CUSHION FORCE WITH ROLL ANGLE

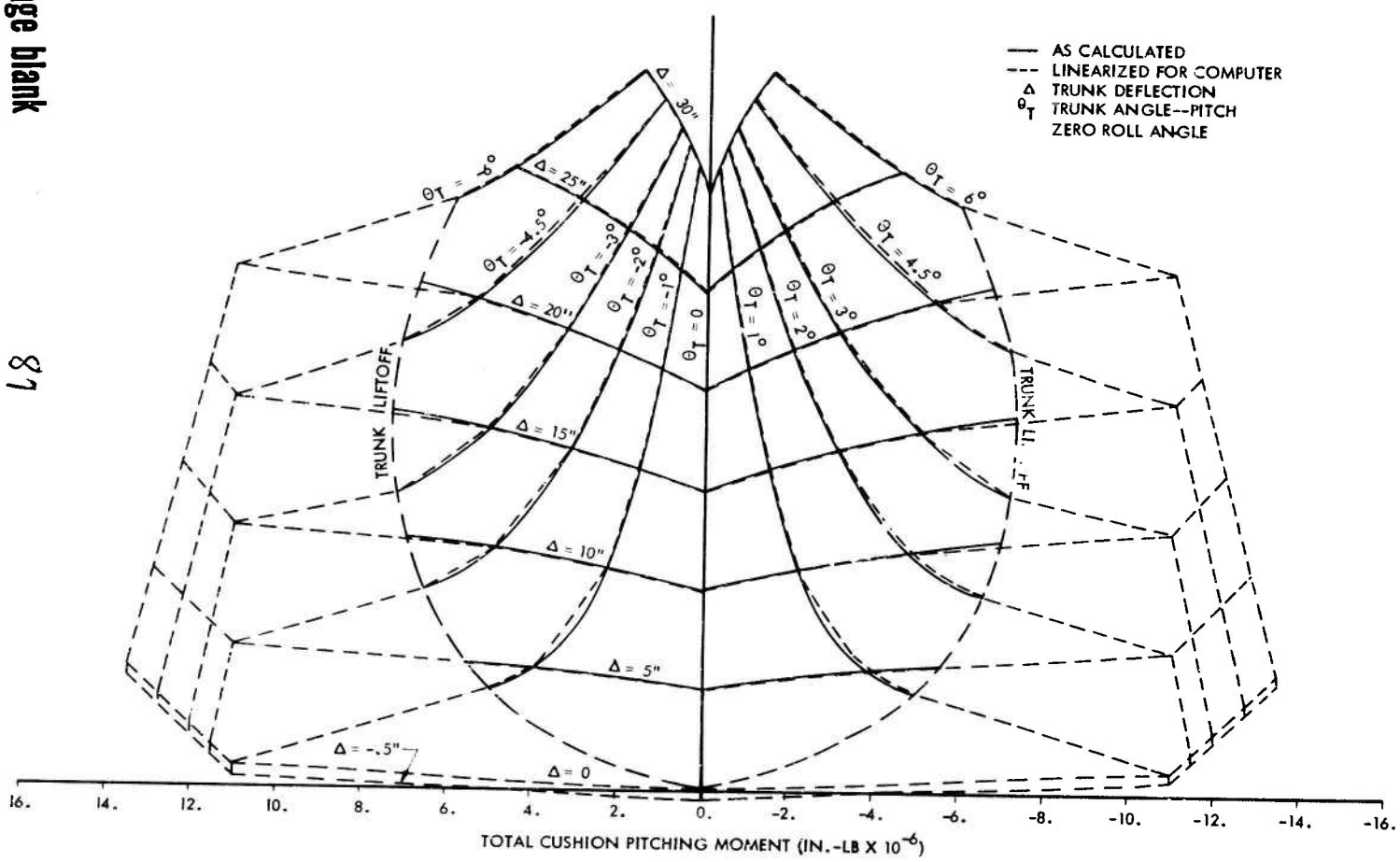

Figure 39: VARIATION OF STATIC CUSHION MOMENT WITH PITCH ANGLE

Preceding page blank

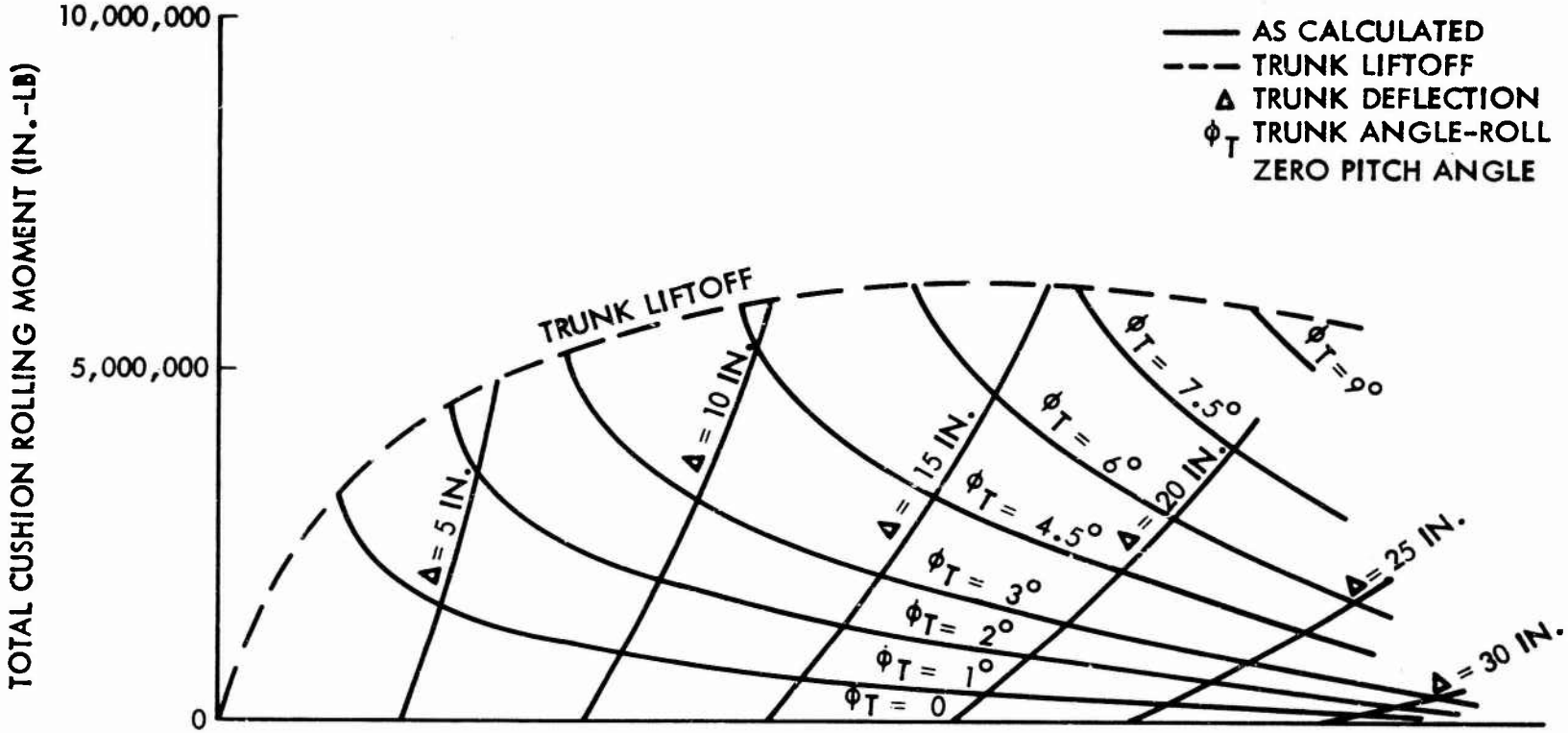

Figure 40: VARIATION OF STATIC CUSHION MOMENT WITH ROLL ANGLE

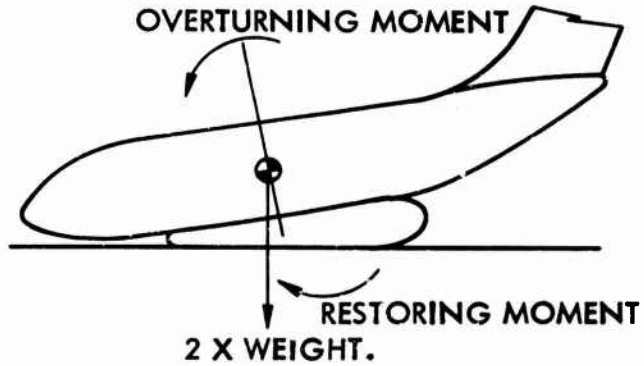

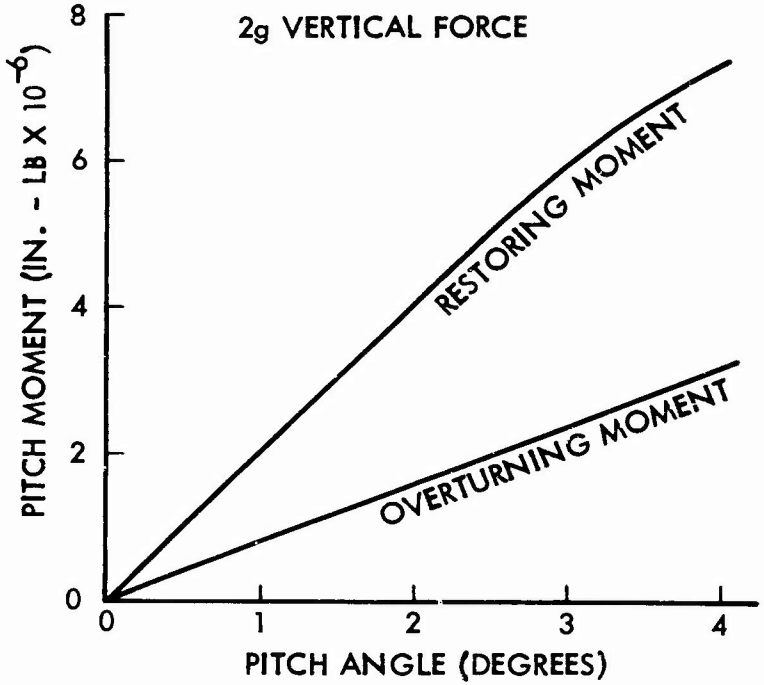

Figure 41: 2g PITCH STABILITY

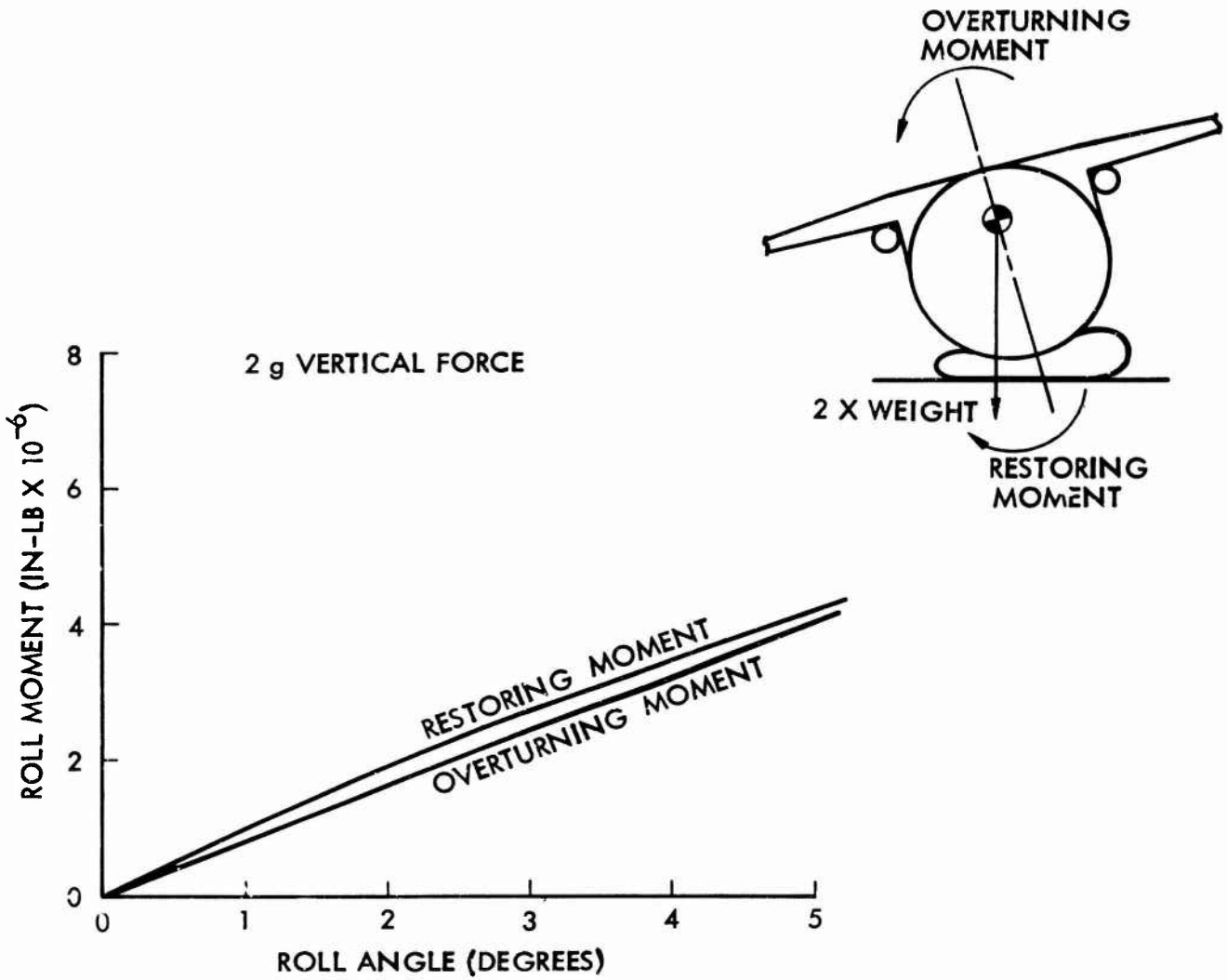

Figure 42: 2g ROLL STABILITY

$$\ddot{X} = \frac{T - DR + L_B - D_B}{W/g}$$

$$\ddot{Z} = \frac{L + L_B - W - T \cdot \tan 3.5^\circ}{W/g}$$

$$\ddot{\theta} = \frac{P_{MOM} + 44.76\, L_B + M_B - 11.7\,(DR - T) - 191.8\, D_B}{I_{yy}}$$

<u>AND</u> $\ddot{D} = \ddot{X} \cos\theta - \ddot{Z} \sin\theta$

$\ddot{H} = \ddot{Z} \cos\theta + \ddot{X} \sin\theta$

$\dot{D} = \int \ddot{D} + \dot{D}_O$

$\dot{H} = \int \ddot{H} + \dot{H}_O$

$D = \int \dot{D} + D_O$

$H = \int \dot{H} + H_O$

$\dot{\theta} = \int \ddot{\theta}$

$\theta = \int \dot{\theta} + \theta_O$

<u>WHERE</u>

L_B AND M_B ARE ARBITRARY FUNCTIONS OF TRUNK DEFLECTION AND ANGLE - SEE FIGURES 37 AND 39

Δ = DEFLECTION = $\frac{HF + HR}{2} - H + 191.8 \cos\theta$

θ_B = TRUNK ANGLE = $\theta - \theta_G$

$\theta_G = \tan^{-1} \frac{HF - HR}{447.6}$

HF AND HR ARE READ FROM TERRAIN PROFILE

L = LIFT, DR = DRAG, T = THRUST

P_{MOM} = PITCHING MOMENT

<u>INITIALLY</u>

$\theta_B = O \quad T = DR_O \quad L = L_O \quad P_{MOM} = O \quad \dot{D} = \dot{D}_O$

$DR = 1/2 \cdot \rho \cdot \dot{D}_O^2 \cdot C_{D_{\theta = O}} \cdot S_W$

S_W = REFERENCE WING AREA

$L = 1/2 \cdot \rho \cdot \dot{D}_O^2 \cdot C_{L_{\theta = O}} \cdot S_W$

PRIMES INDICATE DIFFERENTIAL WITH RESPECT TO TIME.

Figure 43: TAXI ANALYSIS EQUATIONS OF MOTION

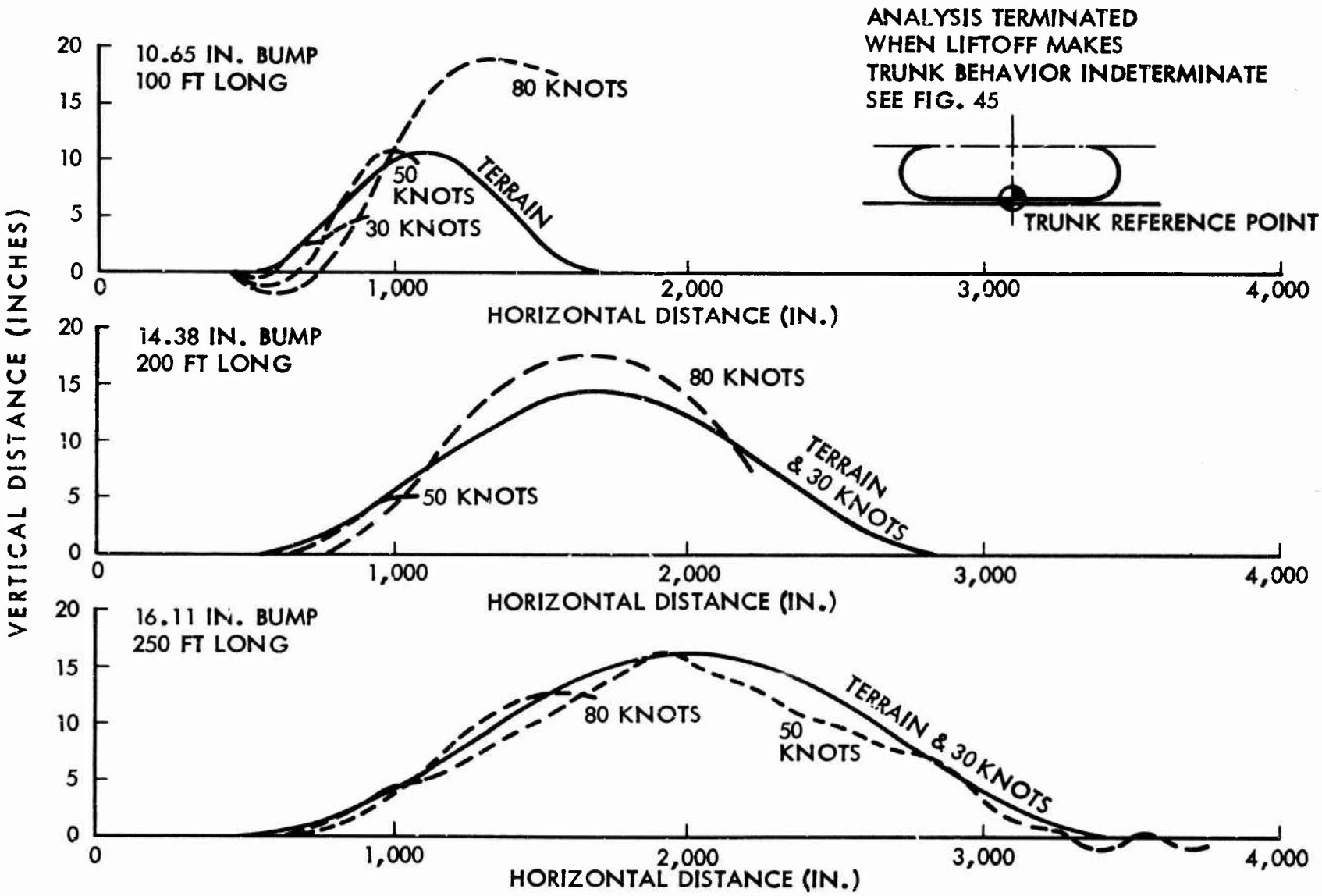

Figure 44: TAXI BEHAVIOR OF ACLS ON MST

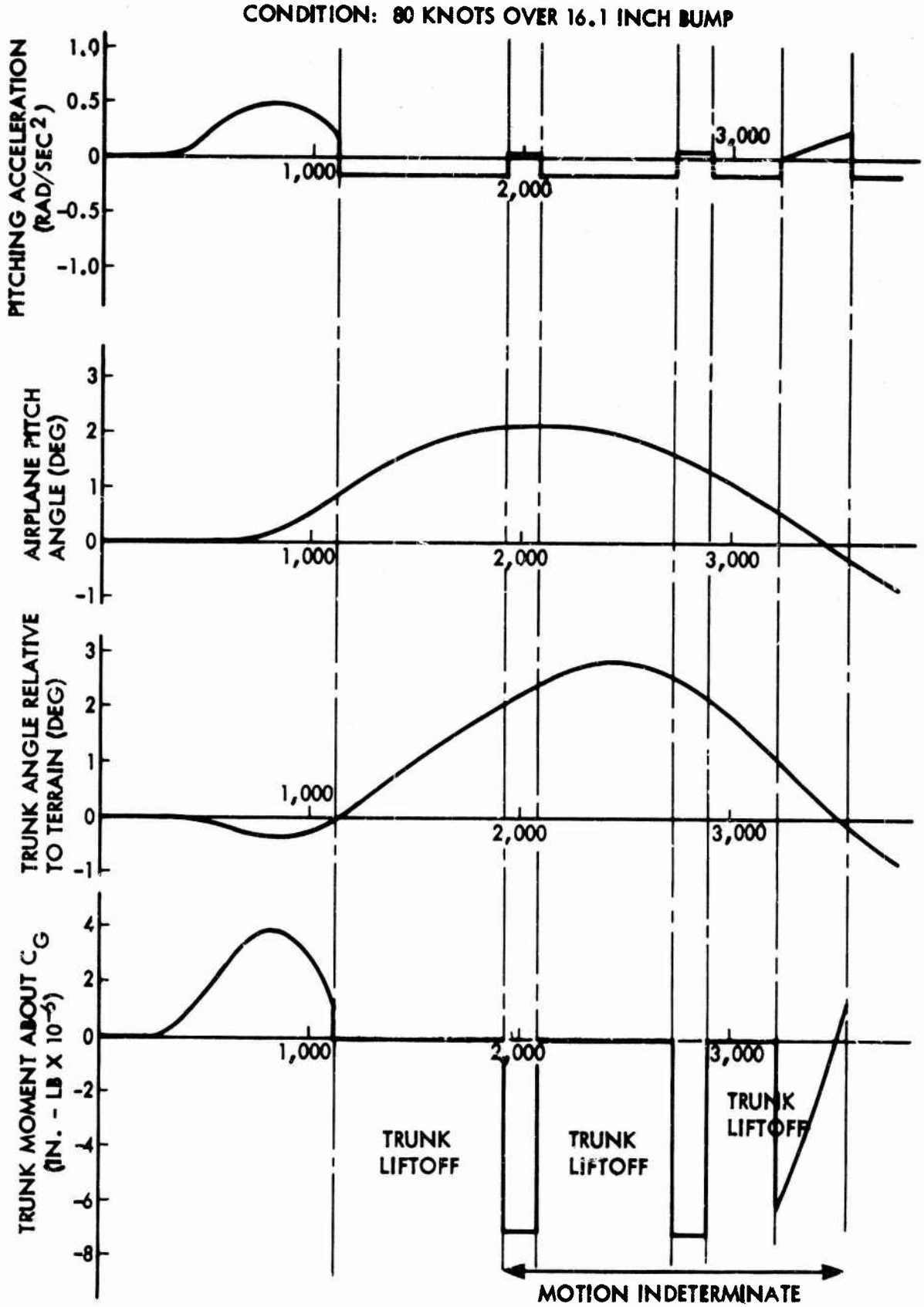

Figure 45: EFFECT OF TRUNK LIFTOFF ON TAXI TIME HISTORY

REFERENCES

1. Gardner, L. H., Navy A-4 Air Cushion Landing System Preliminary Design Study, Boeing Company Document, D162-71046-1, November 1971.

2. Carroll, R. H., et al, STOL Tactical Aircraft Investigation - Configuration Definition: Medium STOL Transport with Vectored Thrust/Mechanical Flaps, AFFDL TR 73-XX, March, 1973.

3. Kraft, David C., Analytical Landing Gear - Soils Interaction - Phase I, AFFDL-TR-68-88.

4. Stauffer, C. L., Ground/Flight Test Report of Air Cushion Landing Gear (LA-4), AFFDL-TR-69-23.

5. Stauffer, Charles L., Water Operations and Overland Braking Test Report of Air Cushion Landing System (LA-4), AFFDL-TR-69-125.

6. Earl, Desmond T., Air Cushion Landing Gear Feasibility Study, AFFDL-TR-67-32.

7. Earl, Desmond T. and Cooper, Richard H., Air Cushion Landing Gear for Aircraft, AFFDL-TR-68-124.

8. Han, S. L., Air Cushion Pressure During Stiff Operation for Air Cushion Landing System, Part I, Theory, AFFDL-TR-71-4, Part I, May 1971.

9. Gorman, D. M. (Lt. USAF), Equilibrium Characteristics of a Distributed Peripheral Jet, Air Force Institute of Technology Thesis, GA/ME/70-1.

10. Milns, P., "An Approach to ACLS Ground Loads," Proceedings of the Conference on Air Cushion Landing Systems, December 1972.

11. Elsley, G. M. and Devereux, A. J., Hovercraft Design and Construction, Cornell Maritime Press, 1968.