AD-766 328

# COMPARISON OF ALUMINUM ALLOY 7050, 7049, MA52, AND 7175-T736 DIE FORGINGS

ALUMINUM COMPANY OF AMERICA

PREPARED FOR

AIR FORCE MATERIALS LABORATORY

MAY 1973

DISTRIBUTED BY:

NTIS

National Technical Information Service
U. S. DEPARTMENT OF COMMERCE

AFML-TR-73-34

AD 766328

# COMPARISON OF ALUMINUM ALLOY 7050, 7049, MA52, AND 7175-T736 DIE FORGINGS

J. T. Staley
Alcoa/Alcoa Laboratories

TECHNICAL REPORT AFML-TR-73-34
May 1973

Air Force Materials Laboratory
Air Force Systems Command
Wright-Patterson Air Force Base, Ohio 45433

Reproduced by
NATIONAL TECHNICAL
INFORMATION SERVICE
U S Department of Commerce
Springfield VA 22151

APPROVED FOR PUBLIC RELEASE; DISTRIBUTION UNLIMITED

129

## NOTICE

When Government drawings, specifications, or other data are used for any purpose other than in connection with a definitely related Government procurement operation, the United States Government thereby incurs no responsibility nor any obligation whatsoever; and the fact that the government may have formulated, furnished, or in any way supplied the said drawings, specifications, or other data, is not to be regarded by implication or otherwise as in any manner licensing the holder or any other person or corporation, or conveying any rights or permission to manufacture, use, or sell any patented invention that may in any way be related thereto.

Copies of this report should not be returned unless return is required by security considerations, contractual obligations, or notice on a specific document.

Security Classification

## DOCUMENT CONTROL DATA - R & D

*(Security classification of title, body of abstract and indexing annotation must be entered when the overall report is classified)*

| | |
|---|---|
| 1. ORIGINATING ACTIVITY *(Corporate author)*<br>Aluminum Company of America<br>Alcoa Laboratories<br>Alcoa Center, Pa. 15069 | 2a. REPORT SECURITY CLASSIFICATION<br>Unclassified<br>2b. GROUP |

3. REPORT TITLE

COMPARISON OF ALUMINUM ALLOY 7050, 7049, MA52, AND 7175-T736 DIE FORGINGS

4. DESCRIPTIVE NOTES *(Type of report and inclusive dates)*

Final Technical Report June 1, 1971 - December 31, 1972

5. AUTHOR(S) *(First name, middle initial, last name)*

James T. Staley

| | | |
|---|---|---|
| 6. REPORT DATE<br>May 1973 | 7a. TOTAL NO. OF PAGES<br>115 | 7b. NO. OF REFS<br>11 |
| 8a. CONTRACT OR GRANT NO.<br>F33615-69-C-1644<br>b. PROJECT NO.<br>c.<br>d. | 9a. ORIGINATOR'S REPORT NUMBER(S)<br><br>9b. OTHER REPORT NO(S) *(Any other numbers that may be assigned this report)*<br>AFML-TR-73-34 | |

10. DISTRIBUTION STATEMENT

Approved for public release; distribution unlimited

| | |
|---|---|
| 11. SUPPLEMENTARY NOTES | 12. SPONSORING MILITARY ACTIVITY<br>Air Force Materials Laboratory<br>Wright-Patterson Air Force Base,<br>Ohio 45433 |

13. ABSTRACT

Die forgings in aluminum alloys 7050, 7049, and MA52 were fabricated and evaluated for resistance to stress-corrosion cracking, quench sensitivity, and fracture toughness. In addition, all Alcoa data on 7050, 7049, and special process 7175-T7X die forgings were examined and the properties were collated. Stress-corrosion resistances were evaluated using the severest combinations of forging type and test conditions.

All of these newer alloys were less quench sensitive than alloy 7075, and all developed better combinations of resistance to stress-corrosion cracking and fracture toughness than 7075-T6 and 7079-T6 at equal strengths. Because it developed the best combination of properties, alloy 7050 is a preferred selection for use as die forgings of relatively heavy section thickness for the aerospace industry. This alloy also can be supplied as hand forgings, plate, extrusions, and sheet. Special process 7175 is an equally good selection for die forgings of thin to moderate section thickness.

DD FORM 1 NOV 65 1473

Security Classification

Security Classification

| 14 KEY WORDS | LINK A ROLE | LINK A WT | LINK B ROLE | LINK B WT | LINK C ROLE | LINK C WT |
|---|---|---|---|---|---|---|
| Alloy | | | | | | |
| 7050 | | | | | | |
| 7049 | | | | | | |
| 7175 | | | | | | |
| Stress-corrosion | | | | | | |
| $K_{Ic}$ | | | | | | |
| Die Forging | | | | | | |



Security Classification

AFML-TR-73-34

# COMPARISON OF ALUMINUM ALLOY 7050, 7049, MA52, AND 7175-T736 DIE FORGINGS

J. T. Staley

Approved for public release;
distribution unlimited

AIR FORCE MATERIALS LABORATORY
AIR FORCE SYSTEMS COMMAND
WRIGHT-PATTERSON AIR FORCE BASE, OHIO 45433

ib

## FOREWORD

This report was prepared by the Physical Metallurgy Division, Alcoa Research Laboratories, New Kensington, Pennsylvania under contract F33615-69-C-1644. The contract was initiated under Project No. 7351, "Metallic Materials", Task No. 735105, "High Strength Metallic Materials". The program is monitored by the Air Force Materials Laboratory, with Dr. T. M. F. Ronald, AFML/LLS, as Project Engineer. This report covers the period June 1, 1971 through December 31, 1972 and was released by the author in February 1973.

This technical report has been reviewed and is approved.

C. M. PIERCE
Actg. Chief
Metal and Ceramic Synthesis Branch
Metals and Ceramics Division
Air Force Materials Laboratory

## ABSTRACT

Die forgings in aluminum alloys 7050, 7049, and MA52 were fabricated and evaluated for resistance to stress-corrosion cracking, quench sensitivity, and fracture toughness. In addition, all Alcoa data on 7050, 7049, and special process 7175-T7X die forgings were examined and the properties were collated. Stress-corrosion resistances were evaluated using the severest combinations of forging type and test conditions.

All of these newer alloys were less quench sensitive than alloy 7075, and all developed better combinations of resistance to stress-corrosion cracking and fracture toughness than 7075-T6 and 7079-T6 at equal strengths. They ranked as follows on the basis of these criteria.

| Criteria | Rank |
|---|---|
| Resistance to SCC, 365-500 days natural environment | 1-7050 and 7175; 2-7049 and MA52 |
| Resistance to SCC, 84 days 3.5% NaCl | 1-7050; 2-7049; 3-7175 and MA52 |
| Resistance to SCC, 30 days 3.5% NaCl | 1-7175; 2-7050 and 7049; 3-MA52 |
| Low Quench Sensitivity | 1-MA52; 2-7050; 3-7175 and 7049 |
| Fracture Toughness | All equal and greater than 7075-T6 and 7079-T6 |

This analysis indicates that alloy 7050 is a preferred selection for use as die forgings of relatively heavy section thickness for the aerospace industry. This alloy also can be supplied as hand forgings, plate, extrusions, and sheet. Special process 7175 is an equally good selection for die forgings of thin to moderate section thickness.

TABLE OF CONTENTS


| Section No. | | Page |
|---|---|---|
| I. | INTRODUCTION | 1 |
| II. | MATERIAL | 3 |
| | 1. CURRENT WORK | 3 |
| | 2. OTHER INVESTIGATIONS | 4 |
| | a. 7050 | 4 |
| | b. 7049 | 4 |
| | c. 7175 | 5 |
| III. | TEST PROCEDURES | 6 |
| | 1. FRACTURE TOUGHNESS | 6 |
| | 2. STRESS CORROSION | 6 |
| IV. | RESULTS AND ANALYSES | 9 |
| | 1. TENSILE PROPERTIES | 9 |
| | 2. FRACTURE TOUGHNESS | 9 |
| | 3. STRESS CORROSION | 10 |
| | a. Factors Affecting SCC Test Performance | 10 |
| | b. Mean Critical Yield Strength | 11 |
| | c. Mean Critical Stress | 11 |
| | d. Effects of Strength and Stress | 12 |
| | e. Results of SCC Analyses | 13 |
| V. | SUMMARY | 17 |
| VI. | CONCLUSIONS | 18 |
| VII. | RECOMMENDATION | 19 |
| VIII. | REFERENCES | 20 |

TABLE OF CONTENTS (CONTINUED)


| Section No. | | Page |
|---|---|---|
| IX. | APPENDIX I<br>Properties and Heat Treating Conditions of Die Forgings Not Produced for this Contract | 81 |
| X. | APPENDIX II<br>Probit Analysis | 113 |

## LIST OF TABLES


| No. | |
|---|---|
| I. | Melt Analyses |
| II. | Results of Metallographic Examination of Ingots |
| III. | Transverse Tensile Properties of Alloy 7049 in Die No. 15093 |
| IV. | Transverse Tensile Properties of Alloy MA52 in Die No. 15093 |
| V. | Transverse Tensile Properties of Alloy 7050 in Die No. 15093 |
| VI. | Results of Corrosion Tests on 7175-T7X Die Forgings Exposed 84 Days to 3.5% NaCl A.I. |
| VII. | Results of Corrosion Tests on 7175-T7X Die Forgings Exposed 84 Days to Controlled A.I. Federal Test Method 823 |
| VIII. | Effect of Specimen Location and Size on Stress-Corrosion Performance of 7050 Die Forgings Exposed 84 Days to A.I., Federal Test Method 823 |
| IX. | Results of Corrosion Tests on 7049-T73 and 7050 Die Forgings Die 9619 |
| X. | Properties of 7050 Alloy Die No. 9078 Forgings |
| XI. | Properties of 7049 Alloy Die No. 9078 Forgings |
| XII. | Properties of MA52 Alloy Die No. 9078 Forgings |
| XIII. | Tensile Properties of Forgings Alcoa Die No. 9078 |
| XIV. | Tensile Properties of 7050 Forgings in Alcoa Die 15093 |
| XV. | Tensile Properties of 7049 Forgings in Alcoa Die 15093 |
| XVI. | Tensile Properties of MA52 Forgings in Alcoa Die 15093 |
| XVII. | Results of Fracture Toughness Tests on Forgings |

LIST OF TABLES (CONTINUED)


No.

XVIII. Results of Corrosion Tests of Die 9078 Forgings Exposed in A.I. Federal Test Method 823

XIX. Results of Corrosion Tests of Die 9078 Forgings Exposed in New Kensington Atmpsphere

XX. Stress-Corrosion Performance of Alloy 7049 in Alcoa Die 15093

XXI. Stress-Corrosion Performance of Alloy MA52 in Alcoa Die 15093

XXII. Stress-Corrosion Performance of Alloy 7050 in Alcoa Die 15093

XXIII. Results of Stress-Corrosion Tests, Exposure of 7175-T7X Die Forgings to New Kensington Atmosphere

XXIV. Results of Corrosion Tests of 7050 Die Forgings Exposed in A.I. Federal Test Method 823

XXV. Results of Corrosion Tests on 7050 Die Forgings Exposed at Least One Year in New Kensington Atmosphere

XXVI. Results of Corrosion Tests of 7049-T7X Die Forgings Exposed 84 Days to A.I. Federal Test Method 823

XXVII. Results of Stress-Corrosion Tests on 7049-T7X Die Forgings Die No. 9078

XXVIII. Results of Stress-Corrosion Tests on 7049-T7X Die Forgings S-399301, Die No. 9078 Processed by Special Fabricating Practice

XXIX. Results of Corrosion Tests on 7049-T7X Die Forgings Die 9078

XXX. Effect of Forging Type and Test Conditions on Mean Critical Yield Strength of 7050 Die Forgings

XXXI. Effect of Forging Type and Test Conditions on Mean Critical Yield Strength of 7049 Die Forgings

XXXII. Effect of Forging Type and Test Conditions on Mean Critical Yield Strength of MA52 Die Forgings

LIST OF TABLES (CONTINUED) - APPENDIX I


No.

XXXIII. Mechanical Properties of 7075-T7X in Die No. 9619

XXXIV. Tensile Properties of Plant Aged 7050 Die Forging No. 15789

XXXV. Tensile Properties and Electrical Conductivities of ARL Aged 7050 Die Forging No. 15789

XXXVI. Tensile Properties and Electrical Conductivity of Plant Aged 7050 Die Forgings 8457

XXXVII. Tensile Properties of 7050 Die Forgings No. 8457 Aged at ARL

XXXVIII. Tensile Properties and Electrical Conductivities of 7050 Forgings Die No. 10853

XXXIX. Tensile Properties of 7050 Die Forging No. 15093

XL. Tensile Properties of Plant Aged 7050 Die Forgings 9078

XLI. Tensile Properties of ARL Aged 7050 Die Forging 9078

XLII. Tensile Properties of a Plant Aged 7050 Forging Alcoa Die No. 15789

XLIII. Mechanical Property Tests 7049-T7X Die Forgings Die No. 9078

XLIV. Tensile Tests on 7049-T7X Die Forgings Die No. 9078

XLV. Mechanical Properties of 7049-T7X Die Forging Die No. 15621

XLVI. Mechanical Properties 7049-T7X Die Forgings Die No. 16347

XLVII. Tensile Properties of 7175-T7X Die Forgings

## LIST OF ILLUSTRATIONS


| No. | |
|---|---|
| 1. | Boeing Rib Forging Hinge Support Elevator Station Alcoa Die 9078 |
| 2. | McDonnell-Douglas Nose Landing Gear Cylinder Alcoa Die 15093 |
| 3. | 7050 Ingot - 15" Diameter |
| 4. | 7049 Ingot - 16" Diameter |
| 5. | MA52 Ingot - 16" Diameter |
| 6. | Macrostructure of 7050 Ingot |
| 7. | Macrostructure of 7050 Ingot |
| 8. | Macrostructure of MA52 Ingot |
| 9. | Macrostructure of MA52 Ingot |
| 10. | Macrostructure of 7049 Ingot |
| 11. | Macrostructure of 7049 Ingot |
| 12. | Compact Tension Fracture Toughness Specimen |
| 13. | Measured Percent Survival |
| 14. | Specimen Location in Alcoa Die Nos. 9078 and 8457 |
| 15. | Quench Sensitivity Curves |
| 16. | Fracture Toughness of Die Forgings |
| 17. | Days to Failure vs Short-Transverse Yield Strength |
| 18. | Percent Survival vs Short-Transverse Yield Strength |
| 19. | Graphical Means of Determining Mean Critical Stress |
| 20. | Percent Survival vs Yield Strength, Web-Flange Die Forgings |
| 21. | Stress vs Critical Strength, Web-Flange Die Forgings |
| 22. | Stress vs Critical Strength, 30 Days 3.5% NaCl, A.I. |

LIST OF ILLUSTRATIONS (CONTINUED)


No.

23. Stress vs Critical Strength, 84 Days 3.5% NaCl, A.I.

24. Stress vs Critical Strength, Web-Flange Die Forgings

25. Percent Survival vs Time in Industrial Atmosphere

26. Percent Survival vs Time in Alternate Immersion Test


LIST OF ILLUSTRATIONS - APPENDIX I


27. Landing Gear Part - Die No. 9619

28. Landing Gear Part - Die No. 9619

29. Web-Flange Die Forging - Die No. 9078

30. Web-Flange Die Forging - Die No. 9078

31. Landing Gear Cylinder - Die 15621

32. Landing Gear Cylinder - Die 15621

33. Landing Gear Cylinder - Die 16347

34. Landing Gear Cylinder - Die 16347

35. 7050 Alloy Test Locations - Die No. 10853

36. Test Bar Locations, Alcoa Die 15093

37. Location of Short-Transverse SCC Specimens in Die Forging 8457

38. Die No. 15789

39. SCC Specimen Location - Die No. 15789

40. Test Bar Locations, Alcoa Die 15093


LIST OF ILLUSTRATIONS - APPENDIX II


41. Method of Calculating Overall Probability of Passing SCC Test

## SECTION I

## INTRODUCTION

Four aluminum alloys have emerged as potential solutions to the need for aluminum-base material with a combination of strength, fracture toughness and resistance to stress-corrosion cracking superior to combinations provided by 7075. These are 7175-T736, 7049-T73, 7050, and an alloy (designated MA52 in this report) representing the compositions selected in two independent investigations under U. S. Air Force contracts.

The four alloys are all of the Al-Zn-Mg-Cu type. Alloy 7175-T736 forgings employ the higher purity 7175 modification of 7075 coupled with special processing conditions from ingot to final heat treated product. Alloy 7049-T73 is a variant with higher Zn content and decreased Cu, Cr, Fe and Si contents relative to 7075.[1] Alloy 7050, developed under U. S. Navy contracts[2,3,4] and the first phase of this contract,[5] has increased Zn and Cu contents relative to 7075 with Zr in place of Cr and low impurities, Fe and Si, specified. The MA52 composition, representing the selections of two contract programs, has increased Zn and decreased Cu contents relative to 7075 and Zr plus Mn in place of Cr.[6,7]

These alloys are in various stages of development and application. Alloy 7175-T736 forgings were developed first and are being used in many applications. Guaranteed mechanical properties are higher than those of any other stress-corrosion resistant aluminum alloy forged material. The stress-corrosion acceptance test criterion is a 30-day 3.5% NaCl alternate immersion test at a stress level of 35 ksi. Alloy 7049-T73 forgings were developed later and are being used in some applications. Mechanical properties are substantially higher than those of 7075-T73 forgings. The stress-corrosion acceptance test criterion is a 30-day 3.5% NaCl alternate immersion test at a stress level of approximately 45 ksi (75% of the minimum, guaranteed longitudinal yield strength). Alloys 7050 and MA52 are being evaluated as forgings by several producers. Guaranteed mechanical properties and stress-corrosion acceptance criteria have not been established.

These alloys were developed using different products and were initially evaluated using different stress-corrosion tests. Alloy 7175-T736 was developed using rapidly quenched die forgings of three-inch maximum section thickness, most of which have a pronounced grain directionality; resistance to SCC was initially established using test conditions less severe than those specified later by Federal Test Method 823. Alloy 7050 was developed primarily using plate and all SCC tests were performed

according to Federal Test Method 823. Alloy 7049 was developed using hot water quenched hand forgings and die forgings which did not have pronounced grain directionality, and SCC tests often included C-rings and 0.225" diameter tension specimens which are less sensitive than the 0.125" diameter specimens used in developing 7175 and 7050. Alloy MA52 was developed using thin plate and various die forgings. SCC test specimens were used which are less critical than the 0.125" diameter tension specimens. In addition, and perhaps most significantly, atmospheric exposure data were unavailable. Consequently, initial comparison of the relative merits of these alloys was highly speculative.

The purpose of Phase II of this contract was to produce 7050, 7049, and MA52 in the same die forgings, to evaluate them under identical test conditions, and to compare properties with those of commercially established aluminum alloys 7075 and 7079. In addition, all Alcoa data from other die forgings in these alloys were analyzed and results are compared with those of special processed 7175 forgings used in the development of 7175-T736.

To permit evaluation of the stress-corrosion test performance of the forgings which were not always tested at the same strength and stress levels, a new analytical method was developed.

In accordance with the philosophy at Alcoa, the severest criteria were imposed when rating resistance to stress-corrosion cracking. The most critical stress-corrosion cracking tests of die forgings which exhibited pronounced grain directionality were used in the analysis.

In addition to resistance to stress-corrosion cracking, the alloys are ranked on the basis of quench sensitivity and fracture toughness.

## SECTION II

## MATERIAL

### 1. CURRENT WORK

For this contract, 7049, 7050, and MA52 were evaluated in two shapes. Alcoa die 9078, Figure 1, is a Boeing rib forging hinge support elevator station. Alcoa Die 15093, Figure 2, is a McDonnell-Douglas nose landing gear cylinder. This forging is normally rough machined by boring out the cylinder before heat treatment, but in this experiment it was not machined so that tensile properties in the center could be determined.

Alloys 7049 and MA52 were cast as 16" diameter D.C. ingots and were homogenized 36 hours at 870-880 F and ultrasonically inspected. A 15" diameter homogenized ingot of 7050 that was available from plant stock was applied to this project. Chemical analyses of the melts are presented in Table I, along with composition limits. Analyses of 7050 and 7049 were well within the limits, and analysis of alloy MA52 was within limits of both Boeing Alloy 21,[6] and the composition recommended by Reynolds.[7]

Ingot macrostructures are presented in Figures 3, 4 and 5, and results of metallographic examinations to determine dendrite cell sizes and amount of porosity are presented in Table II. Grain morphology of the 7050 and MA52 ingots was completely equiaxed, but some twin columnar grains were apparent in the 7049 ingot. Dendrite cell sizes of 7049 and the MA52 ingots were about .002", while cell size of the 7050 ingot was about .001". No significant amount of porosity was observed.

The forgings were fabricated using practices standard for high strength 7XXX alloy forgings. Ingots that were forged in die 9078 were extruded prior to forging; ingots that were forged in die 15093 were preforged in blocker dies.

All forgings produced in die 9078 were sound and developed high tensile elongation values, but alloys 7049 and MA52 forgings in die 15093 developed low transverse elongation values (Tables III, IV, V), and metallographic examination disclosed porosity. Consequently, additional ingots of 7050, 7049, and MA52 were cast and new forgings were fabricated.

Structures of the preheated (52 hours at 880 F) 15" diameter ingots were examined at the top and bottom of the ingot. Etched slices, Figures 6 through 11, revealed twin columnar grains extending from the cast surface of slices from

both ends of the 7050 and MA52 ingots and of a slice from one end of the 7049 ingot. Equiaxed grain size near the center of the ingots ranged from microscopic to 1/4" in diameter. Dendrite arm spacings were measured near the center of the ingot and at midradius. Spacings were about 1-2 mils. Some porosity up to .003" in the longest dimension was observed in each ingot.

Solution heat treatment practices of the forgings in die 9078 and die 15093 are described in the tables giving tensile properties. Forgings in die 9078 were quenched in water at a temperature of either 150 F or 212 F, while forgings in die 15093 were quenched in water at 150 F. After 4-5 days at room temperature, they were aged 24 hours at 250 F.

The second-step aging practice was applied in the laboratory. Sections from the web of die 9078 forging were aged 4 to 45 hours at 340 F. Using longitudinal tensile properties as a guide, half-forgings were subsequently aged various times at 340 F in an attempt to provide equal strength in the three alloys. Two of the 7050 forgings did not attain target strength, so reserve sections were used to provide additional material. Whole die 15093 forgings were aged either 10 to 60 hours at 340 F (first trial) or 3 to 12 hours at 350 F (second trial).

## 2. OTHER INVESTIGATIONS

Photographs or sketches of the forgings and mechanical properties are presented in Appendix I.

### a. 7050

Independently of this contract, alloy 7050 was evaluated in web-flange type forgings having highly directional grain flow at the test specimen location (Die Nos. 9078, 8457, 15789); in landing gear type forgings (Die Nos. 9619 and 15093); in a thick, bulky die forging (Die No. 10853); and in a laboratory-fabricated die forging (Die No. 783). Forgings were prepared in Die No. 9078 using proprietary Alcoa practices and forgings in Die No. 8457 were fabricated using both conventional and proprietary Alcoa practices, but the conventionally fabricated materials were produced about two years after the specially processed materials. The other forgings were fabricated using conventional practices.

### b. 7049

Alloy 7049 has been evaluated at Alcoa in web-flange type forgings having highly directional grain flow at the test specimen location (Die No. 9078) and in landing gear type forgings (Die Nos. 9619, 15621, 16347). Forgings were prepared in Die No. 9078 using both conventional and proprietary Alcoa practices, and the other forgings were fabricated using conventional practices.

c. 7175

The 7175-T7X data were obtained from production 7175-T736 forgings as well as from forgings used in the development of this material. Most of the data is from forgings that received less aging than is used for production forgings. Therefore, these test results should not be considered representative of production 7175-T736 forgings. The data do, however, provide a basis for comparing the characteristics of the newer alloys with special process 7175 forgings at various strength levels.

## SECTION III

## TEST PROCEDURES

### 1. FRACTURE TOUGHNESS

Fracture toughness was evaluated using compact tension specimens of the type illustrated in Figure 12. The largest specimen obtainable was used in all cases and specimens were machined from cylinder, strut, web and flange areas in the various die forgings. Values of $K_Q$ that were not strictly valid $K_{Ic}$ were used in the analysis because the $K_Q$ values were considered to be good estimates of $K_{Ic}$.

### 2. STRESS CORROSION

Because alternate immersion test conditions; forging type; and specimen type, size and location in the forging were not constant in all investigations, effects of these factors were examined before analysis of the data was begun. The goal was to select data for analysis which provided the most critical test of susceptibility to stress-corrosion cracking.

Past experience indicated, and results in this contract confirmed, that stress-corrosion test performance of materials evaluated using C-rings was substantially higher than test performance of the same material using tension specimens. Consequently, results of C-ring tests were not considered in the analysis.

Preliminary inspection of the data indicated that stress-corrosion performance of 7175-T7X forgings tested by alternate immersion (10 minutes in solution, 50 minutes drying) using a high purity solution with controlled humidity and room temperature according to Federal Test Method 823 differed from performance of similar forgings tested using New Kensington tap water (<200 ppm total solids) and 99.7% pure NaCl (0.1 max. NaI) and ambient temperature and humidity. (The pH of the lower purity solution was 6.4 to 7.2 and evaporation losses were made up once a month.) Survival rates in both environments were similar for test periods of about 30 days, but survival rates in the controlled test were substantially lower after periods approaching 84 days. This phenomenon is illustrated in Figure 13, using data from Tables VI and VI. Only data that were determined under the controlled conditions were used in the analysis. Consequently, any susceptibility to stress-corrosion cracking was emphasized.

Inspection of the data also revealed that specimen location had an effect on stress-corrosion performance of web-flange forgings which had a high degree of grain directionality in the flange near the flash. The data in Table VIII reveal that 100% of 1/8" diameter 7050 specimens removed immediately adjacent to the flash (Figure 14) of Die Nos. 9078 and 8457 forgings failed in less than 30 days in the alternate immersion test at a stress of 30 ksi. In contrast, 100% of the specimens taken immediately behind this location passed the same test. Because of this strong effect, only results of tests of specimens taken adjacent to the flash were used in the analyses of the stress-corrosion resistance of web-flange forgings. Omitting results of tests of specimens in other locations decreased the proportion of specimens that survived the test.

Contrary to the effect in web-flange forgings, specimen location in landing gear cylinder forgings had no apparent effect on SCC test results. Performances of specimens from the strut, trunnion or cylinder of 7049 and 7050 landing gear cylinders, Die No. 9619 (Table IX), were similar so test results of specimens taken from all locations of this type forgings were used in the analyses.

Increasing specimen diameter also significantly affects stress-corrosion performance. Fourteen 1/4" diameter 7050 tension specimens were removed adjacent to the flash of two Die No. 9078 forgings (Figure 14) and were stressed at 25 to 45 ksi. All but one of these specimens passed the 30-day alternate immersion stress-corrosion test (Table VII). In contrast, 100% of the 1/8" diameter specimens removed adjacent to the flash of the same forgings failed in less than 30 days. Because of the effect of specimen diameter, only the results of tests of 1/8" diameter specimens were analyzed. Limiting the analysis to results of tests of the smaller specimens also decreased the proportion of specimens surviving the test.

In the case of the exposure in the New Kensington atmosphere, no interpretation of the failures was required because past experienced indicated, and spot checking confirmed, that fractured specimens would exhibit evidence of the characteristic intergranular secondary cracks typical of classical stress-corrosion cracking. Metallographic examination of specimens exposed in the 3.5% NaCl alternate immersion test revealed in some cases deep pitting associated with secondary cracks that did not resemble the cracks of specimens exposed in the natural environment. In small experiments consisting of relatively few specimens, such failures are sometimes regarded as "no-test." All of the approximately 1,000 specimens which fractured during the stress-corrosion tests in this summary, however, were not examined metallographically. Moreover, of those that were examined,

interpretation of the nature of the secondary cracks in many of the specimens was not straightforward. Consequently, all specimens that fractured were considered as failures for this analysis. Because stress-corrosion cracking may not have been responsible for all of the failures, the percentage of specimens that failed the accelerated test may be exaggerated.

## SECTION IV

## RESULTS AND ANALYSES

### 1. TENSILE PROPERTIES

Tensile properties of the die 9078 forgings that were quenched in water at either 150 F or 212 F, Tables X-XII, revealed that alloy MA52 was the least sensitive to quench rate and alloy 7050 was intermediate. Quench sensitivity of alloy 7049 was so high that tensile properties of the forgings quenched in boiling water were too low to be useful. Tensile properties of the die 9078 forgings that were used in the stress-corrosion evaluation are presented in Table XIII.

A wide range of strengths could be developed in the die 15093 forgings depending on aging conditions, Tables III through V and XIV through XVI. Elongation and reduction in area values of the 7049 and MA52 forgings in the first trial (Tables III and IV) and those of the 7050 and MA52 forgings in the second trial (Tables XIV and XVI) were low and erratic. Quality differences and structural factors were the principal reasons for the erratic results rather than alloy composition effects. Porosity was responsible for the low values in the first trial, and grain structure was responsible for the erratic results in the second trial.

To summarize effects of quench rate on strength, quench rates at the location of the tension test specimens in the web of forgings in Alcoa Die No. 9078 were estimated. Maximum longitudinal yield strengths that can be developed in die forgings of these alloys are presented as a function of average quench rate in Figure 15. This figure illustrates that quench sensitivity of all of the newer alloys was lower than that of 7075. Quench sensitivity of alloy MA52 was the lowest of the newer alloys, that of 7050 was next, and quench sensitivities of special process 7175 and 7049 were equal.

Depending on section thickness and need for low residual stress, 7175 forgings are quenched in either cold or hot water. Forgings of 7050 and 7049 are regularly quenched in 140 F or 150 F water, and thin forgings of 7050 and thicker forgings of MA52 can be quenched in boiling water.

### 2. FRACTURE TOUGHNESS

The results of Alcoa fracture toughness tests on alloy MA52, 7175-T7X, 7049, and 7050 die forgings are summarized in Table XVII.

Fracture toughness, like resistance to stress-corrosion cracking, should be compared at equal strength levels. $K_Q$ values were plotted versus yield strength to determine the fracture toughness-yield strength relationship for the four alloys. Fracture toughness of the 7050 forgings that were quenched in boiling water fell below the bulk of the data, so these results were not included in the plots.

Figure 16 compares the toughness of the new alloys relative to that of 7075-T6 and 7079-T6 forgings. All of the newer alloys developed an equal combination of strength and toughness which was higher than that of the established alloys.

## 3. STRESS-CORROSION

Although the new alloys develop strengths substantially higher than those of either 7075-T6 or 7079-T6 in their highest strength temper, all of them must be overaged to provide acceptable resistance to stress-corrosion cracking. The minimum amount of overaging needed to promote the development of adequate resistance to stress-corrosion cracking is desired so that loss in strength will be minimal. Because overaging can produce large changes in resistance to stress-corrosion cracking with relatively small changes in strength, stress-corrosion performances of alloys should be compared using products overaged to the same strength level.

### a. Factors Affecting SCC Test Performances

Stress-corrosion performances of alloys in tempers having either very low resistance or very high resistance are relatively insensitive to factors such as specimen size and type, test environment, product, grain structure, test stress and strength. Stress-corrosion performances of alloys in intermediate tempers, however, are very sensitive to these factors, particularly strength and stress. Moreover, alloys such as MA52, 7050, 7049 and 7175 can develop resistances approaching those of either 7075-T6 or 7075-T73 depending on the degree of aging.

Because of the influence of these factors, the ideal way to compare the stress-corrosion resistance of these alloys would be to compare test performances of similar specimens from identical die forgings tested simultaneously under the same conditions. To determine the relationship among stress-corrosion resistance, stress, and strength, the alloys should be compared at a number of equal stress and strength levels. Furthermore, the experiment should be repeated to determine the variance in results, and the performance of a number of different die forging types should be evaluated. Although MA52, 7050 and 7049 die forgings have never been evaluated under these conditions, enough testing has been performed to permit useful comparisons of the relationship between strength and resistance to stress-corrosion cracking.

b. Mean Critical Yield Strength

Critical yield strength is defined as the strength above which stress-corrosion failure occurs in a particular stress-corrosion test and below which stress-corrosion failure does not occur. It is a material property, but depends on test stress, specimen size and type, grain structure, test environment and exposure time. To understand this concept, consider a stress-corrosion test specimen from a particular Al-Zn-Mg-Cu alloy product aged to peak strength. At this strength level, it would fail by stress-corrosion cracking at some stress level. But, when overaged below its critical yield strength, it would not fail at this stress. Because of the nature of critical yield strength, it can be estimated by overaging a series of replicate specimens various degrees, determining their strengths and subjecting them to an appropriate stress-corrosion test.

Precision in estimating critical strength depends on the nature of the data generated. When a series of specimens taken from products having similar grain structures has been exposed for a sufficient time in an environment which induces stress-corrosion cracking in susceptible materials without causing specimen failure due to localized corrosion and mechanical overload, critical yield strength can easily be estimated within one ksi (Figures 17a and 18a). When exposure time is insufficient to induce failure in specimens of susceptible material (Figure 17b) or is so long that it causes specimens of nonsusceptible material to fail by localized corrosion and mechanical overload, (Figure 18b) precision decreases. Because of the large zone of mixed results in such cases, a mean critical yield strength must be estimated. One way is to plot the data as in Figure 13b and draw a curve through the points. Mean critical yield strength is the midpoint of the curve. The method of analysis to be described fits a curve to such data.

c. Mean Critical Stress

Critical stress-corrosion test stress, abbreviated as critical stress, is analogous to critical strength. Critical stress of an alloy is the applied stress above which stress-corrosion failure occurs in a particular stress-corrosion test and below which stress-corrosion failure does not occur. Like critical strength, it is a material property and depends on the strength, specimen size and type, grain structure, test environment and exposure time. To understand this concept, consider a stress-corrosion test specimen of an Al-Zn-Mg-Cu alloy product aged to a particular strength level. When exposed in a stress-corrosion test below the critical stress it will pass, and when exposed above this level it will fail. Critical stress can be estimated by obtaining a series of replicate specimens

from material having the same strength, stressing these at a number of stress levels and exposing them in a corrosive environment for an appropriate time.

Because the error in applying the stress is greater than the error in determining the strength, precision in estimating critical stress is generally lower than precision in measuring critical yield strength. Moreover, to obtain a sufficient number of samples for analysis, data from material having slightly different yield strengths are often pooled. Consequently, a mean critical stress must be estimated. An example of a procedure to estimate mean critical stress of three 7079-T6 die forgings is illustrated in Figure 19. Test results from all of the die forgings were pooled and percent survival was plotted versus applied stress. Mean critical stress is the midpoint of the curve. The method of analysis to be described eliminates the need to pool data from materials having different strengths.

d. Effects of Strength and Stress

When attempts are made to compare materials and when results from a number of separate investigations are pooled, it is frequently found that the strengths of the materials are not the same and that the applied test stresses are different. Consequently, comparisons of resistance to stress-corrosion cracking are difficult. One way is to determine mean critical yield strengths at several stresses and to compare relationships between mean critical yield strengths of several alloys as a function of applied stress. Another way is to compare mean critical stresses of alloys determined by pooling data from material having strengths within some arbitrary limits. A much better way, however, is to analyse all of the data to determine concomitantly the relationship among stress-corrosion performance, stress and strength.

Probit analysis (Appendix II) was used in this work to determine these relationships.[9] It is hypothesized in this analysis that the probability of passing a stress-corrosion test decreases with increasing strength of the material and with increasing applied stress, and that the proportion of specimens that survived the test is an estimate of the probability of passing the test. It is further hypothesized that a function of the proportion survived has a linear relationship with the yield strength and the applied stress. Weighted multiple regression analysis is used to estimate the constants a, b and c in the equation:

$$f(PS) = a + b(AS) + c(YS)$$

where PS = percent survived, AS = applied stress, and YS = yield strength.

After the constants in the equation relating proportion survived with stress and yield strength have been determined, alloys can be compared in several ways. A useful way is to compare mean critical strengths as a function of stress.

Although critical yield strength could be clearly established using the data for 7175-T7X forgings exposed three years in the New Kensington atmosphere (Figure 17a), mean critical strength of 7175-T7X forgings based on performances after shorter times in the New Kensington atmosphere or after exposure in the 3.5% NaCl alternate immersion test could not be established. Relative stress-corrosion resistance was demonstrated by comparing measured stress-corrosion performances of 7175-T7X with performance predicted for 7049 and 7075 at the mean short-transverse yield strength of the 7175-T7X forgings that were tested.

Short-transverse yield strength was selected as the criterion rather than longitudinal or long-transverse yield strength for several reasons:

1. The short-transverse yield strength used in the analysis was the yield strength of specimens removed along with the stress-corrosion specimens; consequently, the correlation was between strength and resistance to stress-corrosion cracking of specimens which had the same grain structure.

2. Specimen location for longitudinal and long-transverse specimens varied from forging to forging.

3. Longitudinal or long-transverse specimens were not tested in a number of cases.

e. Results of SCC Analyses

Data generated in the current contract are presented in Tables XVIII through XXII, and additional data used in the analyses are presented in Tables VII and IX and Tables XXIII through XXIX.

Inspection of the data revealed that stress-corrosion test performance of alloy 7050, 7049 and MA52 die forgings strongly depended on forging type. Of a total of 144 short-transverse specimens of 7050 forged in Alcoa die 783 and aged to a strength of 57 to 75 ksi, only one specimen (stressed at 45 ksi) failed the alternate immersion test after 82 days.[5] The remaining 143 stressed at 25 to 45 ksi survived the 84-day test. Specimens from 7050 forged in Alcoa die 10853 also exhibited an outstanding combination of strength and resistance to stress-corrosion cracking. Metallographic examination of specimens from both of these forgings indicates that the grain structure was not highly directional, so these data were not included in the final analyses.

Stress-corrosion test performances of web-flange and landing gear type forgings in alloys 7050, 7049, and MA52 were sufficiently different to warrant separate analyses. Performances of the 7175-T7X die forgings, however, were essentially equal, so all data were pooled for the analyses.

Quenching practice of 7050 die forgings also had a pronounced effect on stress-corrosion test performance. Performance of 7050 forgings quenched in boiling water was lower than performance of the same forgings quenched in either hot or cold water and aged to the same strengths, so test results of the 7050 forgings quenched in the boiling water were excluded from the final analyses. Resistance to stress-corrosion cracking of the 7049 forgings that were quenched in boiling water was not determined because of the low strength. Stress-corrosion performance of the MA52 die forgings was apparently not affected by quenching rate, so the data were pooled.

The constants in the probit equation

$$Y = a + b \cdot \text{stress} + c(\text{S-T YS})$$

were determined for up to 9 exposure times in the alternate immersion test and in the New Kensington atmosphere.

Calculated survival percentages of 7050 and 7049 web-flange forgings are plotted versus short-transverse yield strength for 30 and 84 days in the alternate immersion test and 500 days in the New Kensington atmosphere in Figure 20. Slopes of the curves for the two alloys were similar for tests conducted under each of the several test conditions analyzed, but exposure time and environment influenced both slope and relative displacement for the two alloys of the percent survived vs yield strength curves. For tests of 30 days duration by alternate immersion the slope was high indicating only about 11 ksi strength difference between 10% and 90% survived. Performance of the two alloys was indicated as not significantly different under these test conditions. Based on the data for 84 days exposure, the difference in strength was greater for given differences in percent survived (22 ksi between 10% and 90% survived) and increased displacement of the curves for the two alloys indicates an advantage for 7050, particularly at the higher applied stresses. The slopes of the curves based on tests of 500 days in New Kensington atmosphere approximated the slopes for the 30-day A.I. testing conditions, but relative alloy performance corresponded more nearly to that indicated by the analyses of the 84-day A.I. tests.

Mean critical short-transverse yield strengths of the 7050, 7049, and MA52 die forgings at 25, 30, 35, 40, and 45 ksi stress levels are presented in Tables XXX through XXXII. The data indicate that stress-corrosion resistance of alloy MA52 forgings was the

lowest of the three and that relative stress-corrosion resistance of 7049 and 7050 depended on forging type and test conditions. These effects are more clearly illustrated in Figures 21 through 23 which present mean critical strengths as a function of applied stress for four sets of exposure conditions and for web-flange forgings separated from landing gear forgings. Performance of web-flange forgings of 7050 exposed in the natural environment exceeded performance of similar forgings of 7049 (Figure 21), but relative performances in the accelerated test depended on forging type and test duration.

After 30 days in the alternate immersion test (Figure 22), performance of landing gear forgings of 7049 exceeded performance of similar forgings of 7050. These data support the claim of high resistance to stress-corrosion cracking of 7049-T73 forgings based on a 30-day test in the 3.5% NaCl alternate immersion test. A specimen from a 7049-T73 landing gear die forging that was stressed at 45 ksi and exposed in the atmosphere, however, failed in less than six months (Table IX).

Performance of web-flange forgings in 7049 and 7050 were similar and lower than performances of landing gear die forgings. This behavior suggests that stress-corrosion characteristics of 7049 are more sensitive to forging type.

Longer exposure time in the accelerated test decreased performances of 7049 to a greater extent than it decreased performances of 7050. After 84 days (Figure 23), performances of landing gear forgings of 7049 and 7050 were similar, while performance of 7050 web-flange forgings exceeded performance of 7049.

These data strongly indicate that the 30-day alternate immersion test is a safe indication of atmospheric performance of 7050 forgings which exhibit pronounced grain directionality, but that the 30-day test is not severe enough to predict atmospheric performance of similar forgings of 7049. This behavior is illustrated in Figure 24 which compares performances of alloys 7049 and 7050 web-flange die forgings after 30 days in the alternate immersion test and after 500 days in the New Kensington atmosphere.

Stress-corrosion performance of 7175-T7X was compared with performances of the other alloys using a different method. Survival percentages of 7175-T7X and 7079-T6 die forgings having pronounced grain directionality were measured after various exposure periods in the New Kensington atmosphere and in the 3.5% NaCl alternate immersion test. These measured percentages were compared with predicted survival percentages of comparable forgings of the other alloys aged to the short-transverse yield strength of 7175-T7X (66.5 ksi mean and 3 ksi standard deviation). The procedures used in predicting are presented in Appendix II.

Relative performances of the alloys depended on test environment. In the atmosphere (Figure 25) performances of 7049, 7050 and 7175-T7X were all higher than the performance of 7079-T6. Performances of 7175-T7X and 7050 were comparable and were higher than the performance of 7049. In the accelerated test (Figure 26), performances of all of the newer alloys were higher than the performance of 7079-T6. Performance of 7175-T7X was highest for short exposure times, and performance of 7050 was higher after longer exposure times.

## SECTION V

## SUMMARY

The data presented in this report evidence the superior combination of low quench sensitivity, toughness and resistance to stress-corrosion cracking of the newer alloys 7050, MA52, 7049, and special process 7175 relative to the properties of alloys 7079 and 7075. The rank of the newer alloys relative to one another, however, is not so clearly demonstrable because ranking varies with the properties being measured.

Quench sensitivities of MA52 and 7050 were the lowest of the four and those of 7175 and 7049 the highest. Because most die forgings either have relatively thin sections or are partially machined before solution heat treatment, however, differences in quench sensitivity may not be practically significant unless a very slow quench is required to reduce residual stresses.

Fracture toughness of the newer alloys was higher than the average toughness of 7075-T6 and 7079-T6, and no clear distinction among the toughnesses of the newer alloys could be demonstrated. Fracture toughness of 7049-T73 has been reported previously by Kaiser and others to equal the toughness of 7075-T6.[1,10] Perhaps purity and fabricating procedures are responsible for the higher toughness observed in the 7049 tested by Alcoa.

Ranking the alloys on the basis of resistance to stress-corrosion cracking required rigorous analysis. Because of the excellent correlation between strength and resistance to stress-corrosion cracking and the large effect of test conditions, all comparisons should preferably be made on materials having the same strength using stress-corrosion data from specimens tested under near identical conditions. A sufficient number of specimens of each alloy having the same strength were not tested, so comparisons were made using probit analysis. In the natural environment, performances of 7050 and special process 7175 were highest, while performance of 7049 was lowest. Performance of MA52 could not be definitely established because of the relatively few specimens exposed and the short exposure time, but other work indicates that atmospheric stress-corrosion resistance of Al-Zn-Mg-Cu-Zr alloys containing 1.25% Cu is substantially lower than resistance of alloys containing 2% or more Cu.[2,3,4,5,11]

The results of this analysis strongly indicate that stress-corrosion performance of 7050 and special process 7175 will exceed performance of the other alloys in service. These alloys, however, did not rank highest in the 3.5% NaCl alternate immersion test. Consequently, the current acceptance test criteria do not reflect the relative merits of the newer alloys.

## SECTION VI

## CONCLUSIONS

1. Relatively thin, rapidly quenched die forgings of 7050, MA52, 7049, and special process 7175 overaged to the strength levels of 7075-T6 and 7079-T6 developed substantially higher resistance to stress-corrosion cracking and higher fracture toughness.

2. Alloy 7050 die forgings developed the best combination of low quench sensitivity, resistance to stress-corrosion cracking, and fracture toughness.

3. Stress-corrosion test performances of the new alloys depended on forging type, environment and exposure time. Atmospheric test performances of 7050 and special process 7175 die forgings were higher than performance of similar forgings of 7049. Performance of 7050 was superior based on 84 days in the 3.5% NaCl alternate immersion test, while performance of 7175 was superior based on the 30-day test.

4. The good combination of strength and resistance to stress-corrosion cracking in the 30-day 3.5% NaCl alternate immersion test of 7049 landing gear type forgings was confirmed. Performance of web-flange forgings having pronounced grain directionality, however, was markedly lower in the accelerated test and in a natural environment.

5. Stress-corrosion test performance of alloy 7050 was higher after 500 days in a natural environment than after 30 days in the 3.5% NaCl alternate immersion test while the reverse was true for alloy 7049.

6. Performance in the alternate immersion test can be substantially increased by increasing specimen size and changing test bar location.

## SECTION VII

## RECOMMENDATION

Continue the use of 7175-T736 die forgings for aerospace applications and consider the use of 7050 die forgings where the lower quench sensitivity of 7050 makes it attractive.

## SECTION VIII

## REFERENCES


1. T. V. Summerson and J. V. Luhan, "Development of 7049-T73 High Strength, Stress-Corrosion Resistant Aluminum Alloy Forgings," presented at 1970 WESTEC, March 11, 1970.

2. J. T. Staley, "Investigation to Develop a High-Strength Stress-Corrosion Resistant Aluminum Aircraft Alloy," Final Report under Naval Air Systems Command Contract N00019-69-C-0292, January 1970.

3. J. T. Staley, "Investigation to Develop a High-Strength Stress-Corrosion Resistant Naval Aircraft Alloy," Final Report under Naval Air Systems Command Contract N00019-70-C-0118, November 1970.

4. J. T. Staley, "Further Development of Aluminum Alloy X7050," Final Report under Naval Air Systems Command Contract N00019-71-C-0131, May 1972.

5. J. T. Staley and H. Y. Hunsicker, "Exploratory Development of High Strength, Stress-Corrosion Resistant Aluminum Alloy for Use in Thick Section Applications," Technical Report AFML-TR-70-256, November 1970.

6. M. V. Hyatt and H. W. Schimmelbusch, "Development of a High-Strength, Stress-Corrosion Resistant Aluminum Alloy for Use in Thick Sections," Technical Report AFML-TR-70-109, May 1970.

7. D. S. Thompson and S. A. Levy, "High-Strength Aluminum Alloy Development," Technical Report AFML-TR-70-171, August 1970.

8. B. W. Lifka and D. O. Sprowls, "Stress-Corrosion Testing of 7079-T6 Aluminum Alloy in Various Environments," in ASTM STP #425, Stress Corrosion Testing, p. 342, December 1967.

9. D. J. Finney, Probit Analysis, 3rd Edition, Cambridge University Press, 1971.

10. K. J. Oswalt, "Northrup Corporation Air Craft Division Report NOR 71-52, entitled "Engineering Property Evaluation of 7049-T73 Die Forged Material," March 5, 1971.

11. J. T. Staley, "Investigation to Improve the Stress-Corrosion Resistance of Aluminum Aircraft Alloys Through Alloy Additions and Specialized Heat Treatment," Final Report under Naval Air Systems Command Contract N00019-68-C-0146, February 1969.

Table 1

**MELT ANALYSES**

| | Zn | Mg | Cu | Zr | Cr | Mn | Fe | Si | Ti | Ni |
|---|---|---|---|---|---|---|---|---|---|---|
| 7050 | 5.90 | 2.30 | 2.48 | .11 | .00 | .00 | .05 | .05 | .01 | .01 |
| 7049 | 7.97 | 2.61 | 1.46 | .00 | .15 | .00 | .06 | .04 | .01 | .00 |
| MA52 | 6.50 | 2.36 | 1.23 | .12 | .00 | .08 | .07 | .04 | .02 | .00 |

**LIMITS**

| | | | | | | | | | | |
|---|---|---|---|---|---|---|---|---|---|---|
| 7050 | 5.7-6.7 | 1.9-2.6 | 2.0-2.6 | .08-.15 | .04* | .10* | .15* | .12* | .06* | -- |
| 7049 | 7.2-8.2 | 2.0-2.9 | 1.2-1.9 | -- | .10-.22 | .20* | .35* | .25* | .1* | -- |
| Boeing Alloy 21 | 5.9-6.9 | 2.2-2.9 | 0.7-1.5 | .10-.25 | .05* | .05-.15* | .20* | .20* | .1* | -- |
| Reynolds | 6.4-7.1 | 2.2-2.8 | 1.1-1.4 | .08-.18 | .03* | .1* | .12* | .10* | .05* | |

* = Maximum

Table II

RESULTS OF METALLOGRAPHIC EXAMINATION OF INGOTS

| Alloy | Average Dendrite Cell Size | Amount of Porosity |
|---|---|---|
| 7050 | .0010" | Trace to small |
| 7049 | .0019" | None |
| MA52 | .0018" | None |

Table III

TRANSVERSE TENSILE PROPERTIES OF
ALLOY 7049 IN DIE NO. 15093

| 2nd Step Age Hrs at 340 F | Specimen Location | Specimen Diameter | TS ksi | YS ksi | % El in 4D | % R of A |
|---|---|---|---|---|---|---|
| 10 | Center of Cylinder | 1/2" | 61.5 | 60.2 | 0.5 | 2 |
| 10 | Surface of Cylinder | 1/8" | 67.8 | 67.6 | 0 | - |
| 10 | Surface of Cylinder | 1/8" | 73.1 | 70.2 | 2.0 | - |
| 10 | Strut | 1/8" | 69.3 | * | 0 | - |
| 10 | Strut | 1/8" | 73.7 | 70.7 | 2.0 | - |
| 17 | Center of Cylinder | 1/2" | 57.5 | 55.0 | 2.0 | 4 |
| 17 | Surface of Cylinder | 1/8" | 70.2 | 60.0 | 6.0 | - |
| 17 | Surface of Cylinder | 1/8" | 69.3 | 61.0 | 4.0 | - |
| 17 | Strut | 1/8" | 65.5 | * | 0 | - |
| 17 | Strut | 1/8" | 66.7 | * | 0 | - |
| 30 | Center of Cylinder | 1/2" | 56.1 | 47.9 | 3.0 | 5 |
| 30 | Surface of Cylinder | 1/8" | 53.9 | 45.9 | 4.0 | - |
| 30 | Surface of Cylinder | 1/8" | 51.3 | 45.9 | 4.0 | - |
| 30 | Strut | 1/8" | 66.8 | 57.5 | 4.0 | - |
| 30 | Strut | 1/8" | 64.8 | 57.8 | 2.0 | - |

* Failed before 0.2% permanent strain attained.

Fabricated from ingot having S. No. 399144.

Solution heat treated 9-3/4 hr @ 880 F.
Quenched in water at 150 F.

Table IV

TRANSVERSE TENSILE PROPERTIES OF
ALLOY MA52 IN DIE NO. 15093

| 2nd Step Age Hrs. at 340 F | Specimen Location | Specimen Diameter | Tensile Properties TS ksi | YS ksi | % El in 4D | % R of A |
|---|---|---|---|---|---|---|
| 17 | Center of Cylinder | 1/2" | 65.3 | 63.5 | 1.0 | 2 |
| 17 | Surface of Cylinder | 1/8" | 60.6 | 60.5 | 0 | - |
| 17 | Surface of Cylinder | 1/8" | 60.5 | * | 0 | - |
| 17 | Strut | 1/8" | 68.4 | 67.7 | 2.0 | - |
| 17 | Strut | 1/8" | 63.6 | * | 0 | - |
| 35 | Center of Cylinder | 1/2" | 59.2 | 55.7 | 1.0 | 3 |
| 35 | Surface of Cylinder | 1/8" | 58.0 | * | 0 | - |
| 35 | Surface of Cylinder | 1/8" | 49.9 | * | 0 | - |
| 35 | Strut | 1/8" | 56.2 | 55.9 | 2.0 | - |
| 35 | Strut | 1/8" | 61.1 | 59.3 | 2.0 | - |
| 60 | Center of Cylinder | 1/2" | 61.1 | 53.0 | 4.0 | 6 |
| 60 | Surface of Cylinder | 1/8" | 56.5 | 54.1 | 2.0 | - |
| 60 | Surface of Cylinder | 1/8" | 58.1 | 54.6 | 4.0 | - |
| 60 | Strut | 1/8" | 61.1 | 54.4 | 4.0 | - |
| 60 | Strut | 1/8" | 64.4 | 54.9 | 6.0 | - |

* Failed before 0.2% permanent strain attained.

Fabricated from ingot having S. No. 399143.
Solution heat treated 9-3/4 hr @ 880 F.
Quenched in water at 150 F.

Table V

TRANSVERSE TENSILE PROPERTIES OF
ALLOY 7050 IN DIE NO. 15093

| 2nd Step Age Hrs at 340 F | Specimen Location | Specimen Diameter | Tensile Properties TS ksi | YS ksi | % El in 4D | % R of A |
|---|---|---|---|---|---|---|
| 17 | Center of Cylinder | 1/2" | 70.2 | 63.1 | 5.0 | 8 |
| 17 | Surface of Cylinder | 1/8" | 73.9 | 67.8 | 2.0 | - |
| 17 | Surface of Cylinder | 1/8" | 74.1 | 67.8 | 4.0 | - |
| 17 | Strut | 1/8" | 79.0 | 71.5 | 6.0 | - |
| 17 | Strut | 1/8" | 78.5 | 70.5 | 8.0 | - |
| 35 | Center of Cylinder | 1/2" | 66.9 | 57.5 | 7.5 | 13 |
| 35 | Surface of Cylinder | 1/8" | 68.5 | 62.7 | 2.0 | - |
| 35 | Surface of Cylinder | 1/8" | 67.6 | 62.7 | 2.0 | - |
| 35 | Strut | 1/8" | 68.9 | 63.1 | 2.0 | - |
| 35 | Strut | 1/8" | 70.0 | 62.0 | 4.0 | - |

Fabricated from ingot having S. No. 399143.
Solution heat treated 9-3/4 hr @ 880 F.
Quenched in water at 150 F.

Table VI

RESULTS OF CORROSION TESTS ON 7175-T7X DIE FORGINGS EXPOSED 84 DAYS TO 3.5% NaCl A.I.

| Die No. | Short-Trans. Yield Strength ksi | Days to Failure, 0.125" ø Short-Transverse Tensile Bars | | | S. No. |
|---|---|---|---|---|---|
| | | 42 ksi Stress | 35 ksi Stress | 30 ksi Stress | |
| 15633 | 69.9 | F7,11,13 | -- | -- | 338075 |
| 15633 | 69.1 | F40,68,73 | -- | -- | 338076 |
| 40001 | 68.7 | F20,37,43 | 2F60,79,10K84 | 2F31,60,10K84 | 369311 |
| 9078 | 68.7 | 2F52,58,10K84 | 30K84 | 30K84 | 366379 |
| 40001 | 68.7 | 30K84 | -- | -- | 337200 |
| 9078 | 68.5 | F7,7,32 | 1F39,20K84 | 1F11,20K84 | 366254 |
| 9078 | 67.8 | 1F60,20K84 | 1F71,20K84 | 2F71,71,10K84 | 366383 |
| 9078 | 67.8 | 1F60,20K84 | 30K84 | 30K84 | 366381 |
| 9078 | 67.8 | F45,58,67 | 2F66,71,10K84 | 30K84 | 366385 |
| 9078 | 67.6 | 6F5,8,12,20,23,38, 40K84 | 6F8,11,12,20,23,38, 60K84 | 2F8,17,30K84 | 338106 |
| 9078 | 67.6 | 2F25,29,10K84 | 1F61,20K84 | -- | 338113 |
| 40001 | 67.6 | F12,14,20,29,29,39 | 5F20,21,21,29,68, 10K84 | 5F20,21,29,33,66, 10K84 | 377678 |
| 9078 | 67.4 | 1F80,20K84 | 30K84 | -- | 366380 |
| 40001 | 67.0 | 2F29,64,40K84 | 60K84 | 60K84 | 377676 |
| 9078 | 66.6 | 30K84 | 30K84 | -- | 366382 |
| 40007 | 66.2 | 2F32,39,10K84 | F24,32,77 | 2F32,39,40K84 | 377544 |
| 40002 | 65.8 | 3F46,52,76,30K84 | 2F59,64,40K84 | 2F80,84,40K84 | 377483 |
| 9078 | 65.7 | 30K84 | 30K84 | -- | 366384 |
| 40006 | 65.5 | 1F52,20K84 | 2F49,52,10K84 | 2F52,80,10K84 | 377543 |
| 40001 | 65.4 | 30K84 | -- | -- | 337202 |
| 40001 | 64.6 | F38,39,54 | 2F84,84,10K84 | -- | 366865 |
| 9078 | 64.0 | 30K84 | 30K84 | -- | 366386 |

Table VII

RESULTS OF CORROSION TESTS ON 7175- T7X DIE FORGINGS
EXPOSED 84 DAYS TO CONTROLLED A.I. FEDERAL TEST METHOD 823

| Die No. | Short-Trans Yield Strength ksi | Days to Failure, 0.125" ø Short-Transverse Tensile Bars | | | | | | S.-No |
|---|---|---|---|---|---|---|---|---|
| | | 45 ksi Stress | 42 or 40[1] ksi stress | 35 ksi Stress | 30 ksi Stress | 25 ksi Stress | 20 ksi Stress | |
| 40001 | 69.6 | -- | F14,18,43 | F35,40,51 | -- | -- | -- | 396331 |
| 9619 | 67.9 | F31,52,58 | F33,36,48 | F48,57,57 | F58,66,77 | 2F66,70<br>10K90 | -- | 396362[2] |
| 40001 | 67.6 | -- | F5,7,19<br>F21,22,32 | F21,22,28<br>F32,39,43 | F20,30,30<br>F40,44 | -- | -- | 377678 |
| 9619 | 67.3 | | F34,30,56 | F42,56,74 | F70,77,90 | F59,66,70 | 1F70<br>20K90 | 396362[3] |
| 40001 | 67.0 | | F49,57,79<br>F61,63,79 | F57,61,63<br>F73,77,84 | 3F50,67,79<br>30K84 | -- | -- | 377676 |
| 40007 | 66.2 | -- | -- | 2F,21,23<br>10K84 | -- | -- | -- | 377544 |
| 40001 | 66.0 | -- | F28,30,40 | F35,36,37 | -- | -- | -- | 396354 |
| 40002 | 65.8 | -- | F21,22,26<br>F27,30,45 | F33,37,63<br>F84,84,84 | 5F37,57,59<br>84,84,10K84 | -- | -- | 377483 |
| 40007 | 65.5 | -- | -- | F21,32,42 | 2F38,58<br>10K84 | -- | -- | 377543 |
| 40001 | 65.0 | -- | F27,35,40 | F36,49,77 | -- | -- | -- | 396358 |
| 40001 | 64.8 | -- | F31,40,56 | F36,36,43 | -- | -- | -- | 395366 |
| 40001 | 64.6 | -- | -- | F25,34,34 | -- | -- | -- | 3666865 |
| 40001 | 64.6 | -- | F35,40,67 | F31,40,56 | -- | -- | -- | 396359 |
| 9078 | 64.4 | -- | F17,20,21 | F28,29,32 | -- | -- | -- | 410701 |
| 40006 | 63.5 | -- | F5,21,46 | F25,44,47 | -- | -- | -- | 410703 |

NOTES:
1. Specimens from S-396362 stressed at 40 ksi, all other specimens stressed at 42 ksi.
2. Specimens from cylinder portion of forging.
3. Specimens from strut portion of forging.

Table VIII

EFFECT OF SPECIMEN LOCATION AND SIZE ON STRESS-CORROSION
**PERFORMANCE OF 7050 DIE FORGINGS EXPOSED 84 DAYS TO A.I., FEDERAL TEST METHOD 823**

| Die | S. No. | Spec. Location | Spec. Diameter | 45 ksi Stress | 40 ksi Stress | 35 ksi Stress | 30 ksi Stress | 25 ksi Stress |
|---|---|---|---|---|---|---|---|---|
| 9078 | 395202 | 1 | 1/8" | -- | F2,4,13 | F1,4,6 | F4,13,28 | F14,23,26 |
| 9078 | 395202 | 2 | 1/8" | -- | F13,13,22 | F10,18,84 | F31,47,84 | F84,20K84 |
| 8457 | 395190 | 1 | 1/8" | F1,1,17 | F10,26,36 | F21,28,30 | F20,23,28 | F23,43,84 |
| 8457 | 395190 | 2 | 1/8" | F4,10,OK84 | F60,20K84 | F62,71,OK84 | 30K84 | 30K84 |
| 9078 | 395205 | 1 | 1/8" | -- | F2,4,6 | F6,13,13 | F6,6,13 | F12,20,23 |
| 9078 | 395205 | 3 | 1/4" | -- | F61,OK65 | F40,OK65 | F22,37 | 20K64 |
| 9078 | 395202 | 3 | 1/4" | -- | F65,OK65 | F65,OK65 | 20K65 | -- |

Specimen Location: 1 = As close to outer surface of flange as possible.

2 = One row behind location number 1.

3 = As close to outer surface of flange as possible. Because 1/4" specimens were longer, axis of specimens was between locations number 1 and 2.

Forgings heat treated 16 hr @ 890 F, cold-water quenched and artificially aged as follows:

S-395190 - 4 hr/250 F + 9 hr/350 F
S-395202 - 4 hr/250 F + 9 hr/350 F
S-395205 - 4 hr/250 F + 7 hr/350 F

Table IX

RESULTS OF CORROSION TESTS ON 7049-T73 AND 7050 DIE FORGINGS DIE 9619

| Location Tested | Short-Trans Yield Strength ksi | Days to Failure, 0.125" ø Short-Transverse Tensile Bars | | | | | | |
|---|---|---|---|---|---|---|---|---|
| | | 45 ksi Stress | 40 ksi Stress | 35 ksi Stress | 30 ksi Stress | 25 ksi Stress | 20 ksi Stress | S-No. |
| 7049 Exposed 90 days to A.I. Federal Test Method 823 | | | | | | | | |
| Strut | 71.5 | -- | F45,52,59 | F57,62,64 | 2F57,66<br>10K90 | 30K90 | 30K90 | 404919 |
| Cylinder | 68.2 | F57,62,62 | F63,66,70 | F55,62,70 | 1F68<br>20K90 | 1F55<br>20K90 | -- | 404920 |
| Barrel | 66.6 | F52,55,90 | -- | -- | -- | -- | -- | 404921 |
| Trunnion | 68.1 | F39,90,90 | -- | -- | -- | -- | -- | |
| Strut | 71.7 | -- | F57,57 | F58,61 | F63,80 | F72,90 | 20K90 | 404924 |
| Cylinder | 69.1 | F33,58 | F35,75 | F52,83 | 1F85<br>10K90 | 1F90<br>10K90 | -- | |
| Strut | 68.5 | -- | F53,73 | 1F85<br>10K90 | 20K90 | 20K90 | 20K90 | 404922 |
| Cylinder | 65.2 | 1F65<br>10K90 | 1F90<br>10K90 | 1F85<br>10K90 | 20K90 | 20K90 | -- | |
| Strut | 68.9 | -- | F55,80,90 | F52,55,61 | 2F77,90<br>10K90 | 1F80<br>20K90 | 30K90 | 404925 |
| Cylinder | 63.8 | F59,85 | 1F90<br>10K90 | 20K90 | 20K90 | 20K90 | -- | |
| Barrel | 66.1 | 2F5' 57<br>10K90 | -- | -- | -- | -- | -- | |
| Trunnion | 67.0 | F31,45 | -- | -- | -- | -- | -- | |

Table IX (continued)

RESULTS OF CORROSION TESTS ON 7049-T73 AND 7050 DIE FORGINGS DIE 9619

| Location Tested | Short-Trans Yield Strength ksi | Days to Failure, 0.125" ϕ Short-Transverse Tensile Bars | | | | | | S-No. |
|---|---|---|---|---|---|---|---|---|
| | | 45 ksi Stress | 40 ksi Stress | 35 ksi Stress | 30 ksi Stress | 25 ksi Stress | 20 ksi Stress | |
| 7049 Exposed to New Kensington Atm. (2-1-72) | | | | | | | | |
| Strut | 71.5 | -- | 20K215 | 20K215 | 20K215 | 20K215 | 20K215 | 404920 |
| Cylinder | 68.2 | F176,10K215 | 20K215 | 20K215 | 20K215 | 20K215 | -- | |
| Strut | 68.9 | -- | 20K215 | 20K215 | 20K215 | 20K215 | 20K215 | 404925 |
| Cylinder | 63.8 | 20K215 | 20K215 | 20K215 | 20K215 | 20K215 | -- | |
| 7050 Exposed 90 Days to A.I. Federal Test Method 823† | | | | | | | | |
| Strut | 65.7 | -- | F46,53,57 | F57,65,82 | F74,20K90 | 30K90 | 30K90 | 404795 |
| Cylinder | 64.6 | F46,0K90 | F58,0K90 | F83,0K90 | 20K90 | 20K90 | -- | |
| Strut | 60.8 | -- | F48,20K90 | 30K90 | 30K90 | 30K90 | 30K90 | 404794 |
| Cylinder | 61.0 | F90,0K90 | F56,0K90 | 20K90 | 20K90 | 20K90 | -- | |

7049 forgings heat treated 4 hr @ 875 F, quenched in water @ 140 F and artificially aged 24 hr/250 F + 22 hr/320 F. S-404919, 404920, 404921 fabricated from Kaiser ingot and heat treated by Kaiser. S-404924 fabricated from Alcoa ingot and heat treated by Kaiser. S-404922 fabricated from Kaiser ingot and heat treated by Vernon. S-404925 fabricated from Alcoa ingot and heat treated by Vernon.

7050 forgings heat treated 5.5 hr @ 880 F, quenched in water @ 150 F and artificially aged 24 hr/250 F in plant, 2nd-step aging for S-404795 applied at ARL and for S-404794 applied at Vernon. 2nd-step age for both forgings was 12 hr/350 F. Both forgings fabricated from Alcoa ingot and heat treated at Vernon.

†Specimens of 7050 have also been exposed in the New Kensington atmosphere for 215 days, at the same stress levels used for the accelerated tests, and none have failed.

Table X

PROPERTIES OF 7050 ALLOY DIE NO. 9078 FORGINGS

| ARL Code | ARL-Age Hr @ 340 F | S.No. 405042 - Plant Identification 12 Quenched in Water @ 150 F | | | | | S.No. 405043 - Plant Identification 14 Quenched in Water @ 212 F | | | | |
|---|---|---|---|---|---|---|---|---|---|---|---|
| | | T.S. ksi | Y.S. ksi | % El in 1" | E.C. % IACS | Hardness Rb | T.S. ksi | Y.S. ksi | % El in 1" | E.C. % IACS | Hardness Rb |
| 1 | 0 | 98.6 | 90.6 | 12.0 | 31.5 | 91 | 88.7 | 74.4 | 10.0 | 37.0 | 80 |
| 2 | 4 | 94.5 | 90.9 | 12.0 | 37.4 | 94 | 82.2 | 70.3 | 10.0 | 41.1 | 83 |
| 3 | 6 | 94.1 | 90.1 | 12.0 | 38.4 | 92 | 82.1 | 71.3 | 11.0 | 42.5 | 82 |
| 4 | 9 | 90.8 | 86.6 | 12.0 | 39.9 | 90 | 82.1 | 72.9 | 11.0 | 43.2 | 83 |
| 5 | 13 | 86.4 | 81.5 | 13.0 | 41.5 | 88 | 76.3 | 65.4 | 12.0 | 43.9 | 79 |
| 6 | 20 | 80.5 | 72.9 | 13.0 | 42.8 | 86 | 73.5 | 62.3 | 13.0 | 45.1 | 76 |
| 7 | 30 | 77.8 | 69.2 | 15.0 | 43.6 | 83 | 71.5 | 60.1 | 14.0 | 45.6 | 73 |
| 8 | 45 | 73.7 | 64.2 | 15.0 | 44.5 | 81 | 68.2 | 56.0 | 13.0 | 45.9 | 73 |

Longitudinal web.

Forgings heat treated 4 hr @ 890 F, quenched as indicated and artificially aged 24 hr/250 F in plant + indicated 2nd-step aging at ARL.

Table XI

PROPERTIES OF 7049 ALLOY DIE NO. 9078 FORGINGS

| ARL Code | ARL-Age Hr @ 340 F | S.No. 405044 - Plant Identification 32 Quenched in Water @ 150 F | | | | | S.No. 405045 - Plant Identification 35 Quenched in Water @ 212 F | | | | |
|---|---|---|---|---|---|---|---|---|---|---|---|
| | | T.S. ksi | Y.S. ksi | % El in 1" | E.C. % IACS | Hardness Rb | T.S. ksi | Y.S. ksi | % El in 1" | E.C. % IACS | Hardness Rb |
| 1 | 0 | 99.2 | 91.6 | 10.0 | 34.6 | 92 | 68.1 | 49.4 | 12.0 | 39.5 | 71 |
| 2 | 4 | 89.7 | 84.7 | 11.0 | 39.8 | 90 | 63.6 | 50.1 | 13.0 | 44.4 | 73 |
| 3 | 6 | 86.8 | 81.0 | 12.0 | 41.1 | 88 | 68.5 | 56.2 | 13.0 | 44.9 | 73 |
| 4 | 9 | 84.7 | 78.2 | 13.0 | 41.9 | 85 | 64.3 | 51.1 | 14.0 | 45.3 | 73 |
| 5 | 13 | 81.2 | 74.1 | 13.0 | 42.8 | 84 | 64.6 | 52.1 | 14.0 | 45.5 | 73 |
| 6 | 20 | 75.7 | 66.7 | 14.0 | 44.0 | 81 | 60.4 | 46.8 | 15.0 | 45.9 | 70 |
| 7 | 30 | 73.4 | 64.0 | 14.0 | 44.5 | 80 | 59.8 | 46.3 | 15.0 | 46.5 | 66 |
| 8 | 45 | 70.0 | 59.5 | 15.0 | 45.0 | 78 | 56.2 | 42.0 | 15.0 | 47.4 | 61 |

Longitudinal web.

Forgings heat treated 4 hr @ 890 F, quenched as indicated and artificially aged 24 hr/250 F in plant + indicated 2nd-step aging at ARL.

Table XII

PROPERTIES OF MA52 ALLOY DIE NO. 9078 FORGINGS

| ARL Code | ARL-Age Hr. @ 340 F | S No. 405046 - Plant Identification 21 Quenched in Water at 150 F | | | | | S No. 405047 - Plant Identification 26 Quenched in Water at 212 F | | | | |
|---|---|---|---|---|---|---|---|---|---|---|---|
| | | T.S. ksi | Y.S. ksi | % El in 1" | E.C. % I.A.C.S. | Hardness Rb | T.S. ksi | Y.S. ksi | % El in 1" | E.C. % I.A.C.S. | Hardness Rb |
| 1 | --- | 98.8 | 93.2 | 11.0 | 31.0 | 93 | 90.8 | 81.5 | 10.0 | 34.0 | 85 |
| 2 | 4 | 90.8 | 87.1 | 12.0 | 36.0 | 91 | 83.9 | 76.5 | 9.0 | 37.4 | 85 |
| 3 | 6 | 89.9 | 85.7 | 13.0 | 36.6 | 92 | 83.1 | 75.2 | 11.0 | 37.9 | 84 |
| 4 | 9 | 87.8 | 83.7 | 13.0 | 38.0 | 90 | 82.5 | 75.5 | 11.0 | 39.0 | 83 |
| 5 | 13 | 85.5 | 81.0 | 13.0 | 38.9 | 86 | 80.4 | 73.4 | 12.0 | 40.1 | 81 |
| 6 | 20 | 80.5 | 74.3 | 14.0 | 39.9 | 86 | 76.0 | 67.8 | 13.0 | 40.5 | 80 |
| 7 | 30 | 78.2 | 71.1 | 15.0 | 40.5 | 83 | 72.7 | 63.9 | 13.0 | 41.1 | 77 |
| 8 | 45 | 75.8 | 68.3 | 14.0 | 40.8 | 81 | 71.8 | 62.4 | 13.0 | 42.1 | 74 |

Longitudinal Web

**Forgings heat treated 4 hr @ 890 F, quenched as indicated and artificially aged 24 hr/250 F in plant + indicated second-step aging at ARL.**

Table XIII

TENSILE PROPERTIES OF FORGINGS
Alcoa Die No. 9078

| S. No. | Quench Temp., °F | 2nd-Step Age Hrs at 340 F | Longitudinal T.S. ksi | Longitudinal Y.S. ksi | Longitudinal El., % | Short-Transverse T.S. ksi | Short-Transverse Y.S. ksi | Short-Transverse El., % |
|---|---|---|---|---|---|---|---|---|
| | | **7050** | | | | | | |
| 405042-15 | 150 | 17 | 84.7 | 78.4 | 13.7 | 76.0 | 66.8 | 8.0 |
| -9 | 150 | 17 | 79.9 | 72.7 | 13.3 | 73.6 | 64.4 | 8.0 |
| -16 | 150 | 25 | 77.6 | 68.4 | 12.3 | 70.5 | 61.6 | 8.0 |
| -11 | 150 | 41 | 72.2 | 61.8 | 14.0 | 67.6 | 56.6 | 11.0 |
| 405043-9 | 212 | 10 | 81.6 | 72.8 | 12.0 | 71.0 | 61.6 | 6.0 |
| -10 | 212 | 15 | 74.5 | 63.4 | 12.0 | 69.0 | 59.4 | 4.0 |
| -11 | 212 | 30 | 73.5 | 62.4 | 12.0 | 67.4 | 55.5 | 10.0 |
| | | **7049** | | | | | | |
| 405044-9 | 150 | 10 | 84.0 | 77.3 | 12.0 | 70.8 | 63.8 | 4.0 |
| -10 | 150 | 17 | 79.5 | 71.3 | 14.0 | 67.1 | 60.6 | 5.0 |
| -11 | 150 | 30 | 74.0 | 63.9 | 14.0 | 65.1 | 55.6 | 8.0 |
| | | **MA52** | | | | | | |
| 405046-9 | 150 | 17 | 81.5 | 75.5 | 14.0 | 70.2 | 63.8 | 6.0 |
| -10 | 150 | 35 | 75.6 | 67.5 | 14.0 | 68.5 | 58.6 | 8.0 |
| -11 | 150 | 60 | 69.3 | 60.3 | 14.0 | 62.6 | 51.0 | 10.0 |
| 405047-9 | 212 | 15 | 80.5 | 74.4 | 14.0 | 69.6 | 60.0 | 6.0 |
| -10 | 212 | 25 | 76.7 | 69.8 | 14.0 | 67.6 | 57.4 | 7.0 |
| -11 | 212 | 60 | 68.0 | 57.6 | 14.0 | 61.0 | 48.4 | 8.0 |

Alloys 7050 and MA52 solution heat treated 4 hr @ 880-890 F. Alloy 7049 solution heat treated 4 hr @ 865-875 F. First-step age on all forgings was 24 hr @ 240-252 F.

Table XIV

TENSILE PROPERTIES OF 7050 FORGINGS IN ALCOA DIE 15093

| Test Location | Grain Direction | Test Specimen | S-413562 Second-Step Age 3 hrs. at 350 F TS ksi | YS ksi | % El in 4D | % R of A | S-413563 Second-Step Age 6 hrs. at 350 F TS ksi | YS ksi | % El in 4D | % R of A | S-413564 Second-Step Age 12 hrs. at 350 F TS ksi | YS ksi | % El in 4D | % R of A |
|---|---|---|---|---|---|---|---|---|---|---|---|---|---|---|
| CYL. | L | 1 | 83.2 | 79.4 | 5.0 | 9 | NT | -- | -- | -- | 72.3 | 61.8 | 15.7 | 38 |
| CYL. | L | 2 | 82.8 | 81.2 | 2.1 | 4 | 76.1 | -- | -- | 0 | 69.3 | 63.7 | 2.9 | 4 |
| CYL. | L | 3 | 83.1 | 81.2 | 3.6 | 7 | 75.4 | -- | -- | 0 | 71.7 | 63.4 | 6.4 | 8 |
| CYL. | L | 4 | 80.5 | 76.7 | 9.3 | 19 | 73.6 | 64.6 | 10.7 | 19 | 66.7 | 54.4 | 15.0 | 39 |
| CYL. | T | 5 | 80.5 | 75.4 | 4.3 | 8 | 71.6 | 68.6 | 2.1 | 3 | 64.7 | 59.8 | 0.7 | 2 |
| CYL. | T | 6 | 79.2 | 76.7 | 4.3 | 8 | 72.1 | 67.9 | 2.1 | 6 | 68.9 | 60.1 | 5.0 | 3 |
| CYL. | L | 7 | 83.1 | 79.7 | 12.9 | 30 | 80.4 | 74.6 | 10.7 | 21 | 73.1 | 62.9 | 15.7 | 37 |
| CYL. | L | 8 | 81.5 | 77.9 | 7.9 | 22 | 76.2 | 70.4 | 3.6 | 4 | 71.4 | 64.3 | 5.0 | 2 |
| CYL. | L | 9 | 84.3 | 81.4 | 5.0 | 9 | 79.7 | 74.2 | 2.1 | 2 | 75.7 | 65.4 | 15.0 | 38 |
| CYL. | L | 10 | 84.7 | 82.4 | 11.4 | 28 | 81.4 | 74.4 | 11.4 | 28 | 73.3 | 62.7 | 12.9 | 33 |
| CYL. | T | 11 | 80.7 | 76.4 | 1.4 | 1 | 70.3 | 67.7 | 0.7 | 1 | 68.3 | 60.4 | 3.6 | 2 |
| CYL. | T | 12 | 80.2 | 76.4 | 2.1 | 3 | 74.7 | 70.7 | 1.4 | 4 | 65.7 | 60.9 | 2.1 | 4 |
| CYL. | L | 13 | 79.7 | 75.2 | 7.1 | 17 | 78.5 | 69.8 | 10.0 | -- | 67.9 | 56.9 | 14.3 | 38 |
| CYL. | L | 14 | 82.7 | 78.4 | 10.0 | 16 | 77.7 | 71.4 | 5.7 | 7 | 73.1 | 60.2 | 12.1 | 29 |
| CYL. | L | 15 | 81.0 | 76.2 | 7.9 | 15 | 77.5 | 70.9 | 7.1 | 12 | 66.3 | 60.4 | 14.3 | 34 |
| CYL. | L | 16 | 81.4 | 74.4 | 7.1 | 17 | 75.7 | 69.5 | 10.0 | -- | 66.7 | 55.5 | 15.0 | 40 |
| STRUT | L | 17 | 82.1 | 76.2 | 15.0 | 42 | 76.7 | 67.2 | 17.1 | 47 | 70.7 | 58.4 | 16.4 | 47 |
| STRUT | L | 18 | 81.7 | 76.4 | 15.0 | 39 | 77.5 | 69.7 | 15.0 | 42 | 71.0 | 58.3 | 16.4 | 43 |
| CYL. | ST | 19 | 78.9 | 74.4 | 2.1 | 9 | 68.9 | 66.9 | 0.7 | 2 | 70.5 | 61.7 | 2.1 | 4 |
| CYL. | ST | 20 | 78.1 | 76.2 | 0.7 | 0 | 69.5 | -- | -- | 0 | 65.7 | 60.6 | 1.4 | 1 |
| CYL. | ST | 21 | 80.5 | 75.4 | 1.4 | 3 | 75.0 | 70.1 | 1.4 | 4 | 70.3 | 60.1 | 7.1 | 9 |
| CYL. | ST | 22 | 80.9 | 75.7 | 2.1 | 3 | 74.8 | 70.1 | 1.4 | 2 | 69.9 | 59.9 | 5.0 | 5 |
| STRUT | ST | 23 | 79.2 | 73.5 | 2.1 | 4 | 71.3 | 64.4 | 3.6 | 3 | 69.5 | 57.6 | 7.9 | 5 |
| STRUT | ST | 24 | 80.7 | 75.7 | 1.4 | 1 | 74.1 | 68.9 | 1.4 | 3 | 69.7 | 59.4 | 6.4 | 5 |
| STRUT | ST | 25 | 80.7 | 75.7 | 1.4 | 2 | 72.3 | 67.7 | -- | 1 | 68.7 | 57.7 | 6.4 | 7 |
| STRUT | ST | 26 | 81.1 | 75.4 | 2.9 | 10 | 70.7 | -- | 0.7 | 0 | 68.7 | 57.7 | 7.9 | 10 |
| CYL. | L | 27 | 80.3 | 76.4 | 11.4 | 27 | 74.1 | 65.4 | 13.6 | 34 | 67.7 | 56.3 | 17.1 | 42 |
| CYL. | ST | 28 | 79.6 | 75.9 | 2.0 | 2 | 65.0 | * | * | * | 69.7 | 61.0 | 6.0 | 6 |
| CYL. | ST | 29 | 80.1 | 75.6 | 2.0 | 3 | 72.4 | 65.7 | 3.5 | -- | 67.7 | 58.6 | 7.0 | 10 |
| CYL. | ST | 30 | 80.4 | 76.4 | 2.0 | 3 | 69.1 | 66.7 | 1.5 | 2 | 67.8 | 60.9 | 8.0 | 12 |
| CYL. | ST | N1 | 79.7 | 73.6 | 2.0 | -- | 75.2 | 70.0 | 4.0 | -- | 69.9 | 61.0 | 8.0 | -- |
| CYL. | ST | N9 | 80.0 | 74.0 | 4.0 | -- | 74.0 | 70.3 | 2.0 | -- | 69.9 | 61.0 | 6.0 | -- |
| STRUT | ST | N17 | 81.7 | 76.4 | 2.0 | -- | 74.8 | 68.0 | 2.0 | -- | 69.9 | 59.3 | 8.0 | -- |
| STRUT | ST | N28 | 81.7 | 76.0 | 6.0 | -- | 76.4 | 67.1 | 10.0 | -- | 70.7 | 59.3 | 10.0 | -- |

* Failed at fillet. NT = No Test.

Fabricated from ingot having S. No. 405489. See Appendix I, Figure 14, for specimen location.

Solution heat treated 9-3/4 hr @ 880 F. Quenched in water at 150 F.

Table XV

TENSILE PROPERTIES OF 7049 FORGINGS IN ALCOA DIE 15093

| Test Location | Grain Direction | Test Specimen | S No. 413565 Second-Step Age 3 hrs. at 350 F TS ksi | YS ksi | % El in 4D | % R of A | S No. 413566 Second-Step Age 6 hrs. at 350 F TS ksi | YS ksi | % El in 4D | % R of A | S No. 413567 Second-Step Age 12 hrs. at 350 F TS ksi | YS ksi | % El in 4D | % R of A |
|---|---|---|---|---|---|---|---|---|---|---|---|---|---|---|
| CYL. | L | 1 | 77.4 | 67.6 | 13.6 | 37 | 73.3 | 63.7 | 15.7 | 35 | 66.5 | 54.1 | 15.0 | 33 |
| CYL. | L | 2 | 80.9 | 74.9 | 7.9 | 27 | 74.1 | 64.9 | 13.6 | 33 | 61.9 | 48.7 | 15.0 | 42 |
| CYL. | L | 3 | 75.7 | 64.9 | 11.4 | 30 | 74.8 | 66.4 | 14.3 | 38 | 65.9 | 54.2 | 15.0 | 44 |
| CYL. | L | 4 | 70.8 | 60.3 | 15.7 | 39 | 66.7 | 54.9 | 15.7 | 37 | 62.7 | 49.0 | 17.1 | 46 |
| CYL. | T | 5 | 73.5 | 63.6 | 12.1 | 17 | 71.5 | 62.8 | 12.9 | 21 | 62.9 | 51.3 | 7.9 | 24 |
| CYL. | T | 6 | 75.7 | 67.4 | 9.3 | 15 | 70.7 | 60.3 | 13.6 | 29 | 65.5 | 53.1 | 17.1 | 49 |
| CYL. | L | 7 | 77.3 | 68.9 | 15.0 | 35 | 72.9 | 63.5 | 15.7 | 41 | 65.1 | 52.6 | 15.7 | 47 |
| CYL. | L | 8 | 76.1 | 66.4 | 12.9 | 31 | 71.5 | 61.9 | 16.4 | 46 | 61.3 | 50.9 | 14.3 | 42 |
| CYL. | L | 9 | 76.1 | 69.7 | 12.9 | 37 | 74.7 | 65.9 | 5.0 | 34 | 67.1 | 57.6 | 5.0 | 42 |
| CYL. | L | 10 | 75.7 | 65.5 | 12.1 | 31 | 71.1 | 59.4 | 17.1 | 46 | 66.0 | 54.8 | 15.0 | 42 |
| CYL. | T | 11 | 76.3 | 66.7 | 7.1 | 10 | 70.7 | 60.3 | 10.0 | 12 | 66.5 | 55.2 | 10.0 | 13 |
| CYL. | T | 12 | 75.1 | 65.4 | 7.1 | 7 | 70.9 | 61.9 | 8.6 | 14 | 65.5 | 53.3 | 11.4 | 20 |
| CYL. | L | 13 | 73.7 | 63.9 | 12.9 | 34 | 67.9 | 56.7 | 15.0 | 34 | 63.8 | 50.1 | 12.1 | 26 |
| CYL. | L | 14 | 77.8 | 67.8 | 7.1 | 28 | 71.7 | 60.4 | 12.9 | 37 | 67.1 | 54.2 | 12.9 | 35 |
| CYL. | L | 15 | 77.3 | 65.9 | 7.1 | 26 | 71.1 | 59.6 | 12.9 | 25 | 66.9 | 55.7 | 5.7 | 43 |
| CYL. | L | 16 | 77.1 | 58.9 | 15.7 | 39 | 64.5 | 51.9 | 16.4 | 44 | 61.3 | 47.7 | 15.7 | 46 |
| STRUT | L | 17 | 79.5 | 71.2 | 16.4 | 44 | 73.3 | 65.4 | 17.9 | 48 | 68.1 | 55.6 | 17.9 | 54 |
| STRUT | L | 18 | 77.5 | 68.9 | 15.0 | 39 | 71.7 | 61.2 | 17.9 | 44 | 66.7 | 53.6 | 17.9 | 47 |
| CYL. | ST | 19 | 74.3 | 64.4 | 9.2 | 14 | 71.1 | 60.3 | 10.7 | 17 | 66.1 | 54.4 | 10.0 | 25 |
| CYL. | ST | 20 | 75.5 | 65.9 | 5.0 | 1 | 69.5 | 58.7 | 10.7 | 20 | 65.3 | 52.6 | 10.0 | 25 |
| CYL. | ST | 21 | 74.5 | 67.4 | 4.3 | 6 | 70.9 | 60.9 | 7.9 | 11 | 64.9 | 52.9 | 11.4 | 20 |
| CYL. | ST | 22 | 76.1 | 69.4 | 4.3 | 6 | 70.9 | 60.0 | 10.0 | 14 | 65.0 | 52.3 | 11.4 | 25 |
| STRUT | ST | 23 | 77.9 | 69.7 | 6.4 | 6 | 74.8 | 61.1 | 11.4 | 25 | 66.9 | 54.5 | 12.1 | 30 |
| STRUT | ST | 24 | 76.9 | 68.9 | 6.4 | 10 | 71.9 | 61.4 | 11.4 | 17 | 66.3 | 54.1 | 12.1 | 23 |
| STRUT | ST | 25 | 74.1 | 65.9 | 15.0 | 11 | 68.9 | 58.2 | 10.7 | 14 | 64.3 | 52.1 | 9.3 | 16 |
| STRUT | ST | 26 | 75.5 | 67.7 | 7.9 | 14 | 70.7 | 59.7 | 10.7 | 19 | 65.7 | 53.2 | 11.4 | 27 |
| CYL. | L | 27 | 72.1 | 63.9 | 15.7 | 42 | 66.7 | 55.7 | 15.7 | 47 | 63.1 | 49.7 | 16.4 | 45 |
| CYL. | ST | 28 | 70.8 | 62.4 | 8.0 | 12 | 67.0 | 57.6 | 9.0 | 15 | 64.5 | 53.2 | 12.0 | 21 |
| CYL. | ST | 29 | 69.4 | 60.7 | 6.0 | 9 | 65.7 | 55.3 | 8.5 | 16 | 62.8 | 51.2 | 10.0 | 19 |
| CYL. | ST | 30 | 72.2 | 63.9 | 7.5 | 8 | 67.4 | 56.8 | 10.0 | 20 | 63.0 | 51.2 | 12.0 | 24 |
| CYL. | ST | N1 | 75.6 | 68.3 | 6.0 | -- | 69.9 | 58.1 | 10.0 | -- | 67.9 | 56.1 | 10.0 | -- |
| CYL. | ST | N9 | 74.4 | 65.9 | 6.0 | -- | 71.5 | 62.6 | 6.0 | -- | 65.9 | 53.7 | 14.0 | -- |
| STRUT | ST | N17 | 78.9 | 71.5 | 12.0 | -- | 73.6 | 63.0 | 12.0 | -- | 68.6 | 56.2 | 14.0 | -- |
| STRUT | ST | N28 | 79.3 | 70.3 | 8.0 | -- | 74.8 | 64.2 | 12.0 | -- | 68.2 | 55.8 | 14.0 | -- |

Fabricated from ingot having S. No. 405491. See Appendix I, Figure 14, for specimen location.

Solution heat treated 9-3/4 hr @ 880 F. Quenched in water at 150 F.

Table XVI

TENSILE PROPERTIES OF MA52 FORGINGS IN ALCOA DIE 15093

| Test Location | Grain Direction | Test Specimen | S No. 413568 Second-Step Age 3 hrs. at 350 F TS ksi | YS ksi | % El in 4D | % R of A | S No. 413569 Second-Step Age 6 hrs. at 350 F TS ksi | YS ksi | % El in 4D | % R of A | S No. 413570 Second-Step Age 12 hrs. at 350 F TS ksi | YS ksi | % El in 4D | % R of A |
|---|---|---|---|---|---|---|---|---|---|---|---|---|---|---|
| CYL. | L | 1 | 83.1 | 77.7 | 12.9 | 31 | 78.2 | 70.9 | 12.9 | 34 | 73.5 | 63.8 | -- | 38 |
| CYL. | L | 2 | 81.8 | 79.2 | 1.4 | 3 | 76.6 | 73.1 | 4.3 | 6 | 72.9 | 65.6 | 17.0 | 47 |
| CYL. | L | 3 | 78.7 | 77.2 | 2.1 | 3 | 79.1 | 72.7 | 8.6 | 7 | 71.5 | 64.0 | 14.0 | 37 |
| CYL. | L | 4 | 77.9 | 72.2 | 12.9 | 32 | 72.5 | 64.7 | 15.7 | 38 | 68.7 | 60.5 | 16.0 | 49 |
| CYL. | T | 5 | 78.8 | 73.7 | 7.1 | 5 | 75.1 | 67.7 | 11.4 | 21 | 70.9 | 61.4 | 12.9 | 30 |
| CYL. | T | 6 | 78.4 | 74.0 | 9.3 | 24 | 74.7 | 67.9 | 11.4 | 22 | 71.7 | 61.7 | 12.9 | 37 |
| CYL. | L | 7 | 81.8 | 76.0 | 15.0 | 40 | 76.6 | 68.5 | 17.1 | 48 | 74.5 | 66.2 | 15.7 | 47 |
| CYL. | L | 8 | 81.5 | 77.0 | 12.1 | 40 | 78.2 | 70.4 | 15.0 | 47 | 77.5 | 68.9 | 14.3 | 43 |
| CYL. | L | 9 | 83.0 | 77.9 | 15.0 | 38 | 78.6 | 71.9 | 16.4 | 42 | 74.5 | 64.4 | 15.7 | 49 |
| CYL. | L | 10 | 83.0 | 77.2 | 15.0 | 42 | 79.1 | 72.4 | 16.4 | 45 | 74.3 | 64.9 | 15.7 | 46 |
| CYL. | T | 11 | 73.6 | 72.5 | 2.1 | 9 | 72.8 | 69.4 | 2.1 | 3 | 67.7 | 62.7 | 1.4 | 2 |
| CYL. | T | 12 | 76.5 | 72.0 | 2.1 | 3 | 70.8 | 68.9 | 1.4 | 2 | 70.9 | 62.4 | 4.3 | 5 |
| CYL. | L | 13 | 78.2 | 71.3 | 10.0 | 17 | 74.4 | 67.1 | 12.1 | 28 | 69.7 | 58.9 | 12.9 | 33 |
| CYL. | L | 14 | 80.2 | 73.7 | 12.9 | 30 | 77.1 | 69.1 | 15.7 | 38 | 74.5 | 67.1 | 16.0 | 45 |
| CYL. | L | 15 | 79.9 | 74.7 | 10.7 | 27 | 76.2 | 69.1 | 12.9 | 36 | 74.9 | 67.0 | 16.0 | 45 |
| CYL. | L | 16 | 77.3 | 72.7 | 14.3 | 38 | 73.1 | 66.4 | 14.3 | 37 | 67.1 | 57.4 | 17.1 | 44 |
| STRUT | L | 17 | 81.0 | 74.7 | 17.1 | 49 | 77.3 | 70.1 | 17.1 | 50 | 71.3 | 59.9 | 20.0 | 53 |
| STRUT | L | 18 | 79.6 | 74.2 | 15.0 | 49 | 73.9 | 66.4 | 15.7 | 47 | 70.7 | 60.7 | 18.6 | 54 |
| CYL. | ST | 19 | 77.5 | 73.2 | 2.1 | 1 | 73.7 | 70.8 | 2.1 | 3 | 67.1 | 62.8 | 0 | 3 |
| CYL. | ST | 20 | 80.1 | 74.0 | 3.6 | 8 | 72.9 | 68.7 | 2.1 | 2 | 68.1 | 62.1 | 2.9 | 4 |
| CYL. | ST | 21 | 79.0 | 74.2 | 2.1 | 6 | 74.7 | 68.4 | 3.6 | 4 | 68.9 | 62.7 | 2.9 | 2 |
| CYL. | ST | 22 | 78.6 | 74.2 | 2.1 | 2 | 75.9 | 68.4 | 5.0 | 6 | 68.9 | 62.4 | 2.9 | 4 |
| STRUT | ST | 23 | 78.2 | 72.1 | 3.6 | 5 | 75.4 | 69.3 | 7.1 | 9 | 70.7 | 59.3 | 7.1 | 10 |
| STRUT | ST | 24 | 79.8 | 73.5 | 4.3 | 6 | 74.7 | 65.9 | 2.1 | 3 | 71.1 | 62.4 | 5.7 | 8 |
| STRUT | ST | 25 | 79.8 | 74.5 | 4.3 | 8 | 74.1 | 67.9 | 3.6 | 4 | 71.3 | 62.2 | 7.1 | 9 |
| STRUT | ST | 26 | 78.6 | 73.0 | 2.9 | 4 | 74.6 | 68.6 | 2.9 | 4 | 71.7 | 61.9 | 5.7 | 5 |
| CYL. | L | 27 | 77.0 | 72.7 | 13.6 | 41 | 72.5 | 64.0 | 16.4 | 46 | -- | -- | -- | -- |
| CYL. | ST | 28 | 78.0 | 73.8 | 2.5 | 8 | 74.6 | 69.5 | 3.5 | 6 | 66.4 | 59.6 | 4.5 | 7 |
| CYL. | ST | 29 | 77.8 | 72.6 | 4.5 | 9 | 73.9 | 66.6 | 7.5 | 10 | 69.2 | 60.9 | 9.0 | 15 |
| CYL. | ST | 30 | 77.8 | 74.4 | 0.5# | # | 72.4 | 67.2 | 2.0 | 2 | 67.2 | 61.6 | 3.0 | 2 |
| CYL. | ST | N1 | 76.8 | 72.4 | 2.0 | -- | 74.4 | 67.5 | 6.0 | -- | 67.3 | 61.7 | 2.0 | -- |
| CYL. | ST | N9 | 76.8 | 70.3 | 4.0 | -- | 72.4 | 67.5 | 2.0 | -- | -- | -- | -- | -- |
| STRUT | ST | N17 | 80.1 | 72.4 | 10.0 | -- | 76.8 | 67.9 | 10.0 | -- | 67.9 | 59.3 | 6.0 | -- |
| STRUT | ST | N28 | 78.9 | 73.2 | 4.0 | -- | 75.6 | 67.1 | 12.0 | -- | 70.7 | 60.2 | 12.0 | -- |

#Failed at fillet.

Fabricated from ingot having S. No. 405490. See Appendix I, Figure 14, for specimen location.
Solution heat treated 9-3/4 hr @ 880 F. Quenched in water at 150 F.

Table XVII

RESULTS OF FRACTURE TOUGHNESS TESTS ON FORGINGS

| Alloy & Temper | Product | Quench | L-T Test Direction Web-Body Y.S. ksi | L-T Test Direction Web-Body $K_{Ic}$ ksi$\sqrt{in}$ | L-T Test Direction Flange Y.S. ksi | L-T Test Direction Flange $K_{Ic}$ ksi$\sqrt{in}$ | S-L Direction Y.S. ksi | S-L Direction $K_{Ic}$ ksi$\sqrt{in}$ | S. No. |
|---|---|---|---|---|---|---|---|---|---|
| 7175-T7X | Die Forging | CWQ | 72.3 | 40.2* | | | 62.8 | 31.3 | 377121 |
| 7175-T7X | Die Forging | CWQ | 70.6 | 27.4 | | | 69.8 | 21.7 | 395659 |
| 7175-T7X | Die #9619 | CWQ | | | 73.3 | 36.7 | 66.3 | 27.6 | 396363 |
| 7175-T7X | Die Forging | CWQ | 71.7 | 35.0* | 68.7 | 35.9* | 67.1 | 27.1 | 369311 |
| 7175-T7X | Die Forging | CWQ | 76.9 | 31.5 | | | 68.4 | 22.1 | 410704 |
| 7175-T7X | Die Forging | CWQ | 69.8 | 38.8 | | | 65.2 | 26.0 | 410705A |
| 7175-T7X | Die Forging | CWQ | 72.4 | 33.5 | | | 67.4 | 25.4 | 410705C |
| 7175-T7X | Die Forging | CWQ | 71.8 | 28.8 | | | 66.4 | 27.4 | 410705B |
| 7050-T736 | Die #8457 | 150 F | 61.9 | 43.6 | | | 64.2 | 26.5 | 405253 |
| 7050-T7X | Die #15789 | CWQ | 76.2 | 34.4 | | | 65.7 | 27.0 | 394708 |
| 7050-T736 | Die #15093 | 150 F | 67.9 | 32.5* | | | | | 412850-2 |
| 7050-T7X | Die #9619 | CWQ | | | 66.8 | 34.6 | 65.6 | 26.9 | 404795 |
| 7050-T7X | Die #9619 | CWQ | | | 62.0 | 35.6 | 61.5 | 31.7 | 404794 |
| 7050-T7X+ | Die #9078 | 150 F | 72.7 | 34.9* | | | 64.4 | 30.2* | 405042-9 |
| 7050-T7X+ | Die #9078 | 150 F | 61.8 | 36.7* | | | 56.6 | 28.4* | 405042-11 |
| 7050-T7X+ | Die #9078 | 212 F | 72.3 | 27.2 | | | 61.6 | 17.4 | 405043-9 |
| 7050-T7X+ | Die #9078 | 212 F | 62.4 | 33.9* | | | 55.5 | 24.3* | 405043-11 |
| 7050-T7352 | 6" HF | CWQ | 70.3 | 30.0* | | | 62.4 | 19.8 | 399364 |
| 7050-T7X | 3" HF | CWQ | 72.0 | 30.0* | | | 72.0 | 21.0 | 395473 |
| 7050-T7X2 | 3" HF | CWQ | 65.6 | 45.0* | | | 63.4 | 21.2 | 379557 |
| 7050-T73 | 3" HF | 150 F | 68.0 | 39.0 | | | 68.0 | 23.0 | |
| 7050-T7352 | 5" HF | CWQ | 73.0 | 31.5 | | | 72.0 | 21.9 | |
| 7049-T7X+ | Die #9078 | | 77.3 | 37.0* | | | 60.6 | 27.2 | |
| 7049-T7X+ | Die #9078 | | 63.9 | 34.8* | | | 55.6 | 29.4* | 405044-11 |
| 7049-T73 | Die #9619 | 140 F | | | 70.5 | 30.2 | 68.1 | 22.0 | 404920 |
| 7049-T73 | Die #9619 | 140 F | | | 64.6 | 32.4 | 68.0 | 23.4 | 404925 |
| 7049-T73 | Die #15621 | 140 F | 73.4 | 35.4 | | | 73.4 | 21.3* | 398957 |
| 7049-T73 | Die #16347 | 140 F | 70.6 | 28.2 | | | 70.6 | 23.4* | 398956 |
| 7049-T7X | Die #9078 | CWQ | 80.2 | 28.4 | 76.4 | 32.7* | 67.9 | 20.4 | 398775 |

Table XVII (continued)

RESULTS OF FRACTURE TOUGHNESS TESTS ON FORGINGS

| Alloy & Temper | Product | Quench | L-T Test Direction Web-Body Y.S. ksi | L-T Test Direction Web-Body $K_{Ic}$ ksi√in | L-T Test Direction Flange Y.S. ksi | L-T Test Direction Flange $K_{Ic}$ ksi√in | S-L Direction Y.S. ksi | S-L Direction $K_{Ic}$ ksi√in | S. No. |
|---|---|---|---|---|---|---|---|---|---|
| 7049-T7X | Die #9078 | CWQ | | | 68.5 | 33.1* | 62.5 | 24.1 | 398776 |
| 7049-T7X | Die #9078 | CWQ | 82.7 | 24.2 | 82.1 | 27.4 | 75.1 | 20.8 | 398777 |
| 7049-T73 | Die #9078 | 140 F | 80.7 | 22.5 | 73.7 | 26.7 | 68.5 | 17.9 | 398778 |
| 7049-T73 | Die #9078 | 140 F | 76.7 | 23.8 | 72.7 | 28.8 | 66.5 | 18.8 | 398779 |
| 7049-T73 | 5" HF | 140 F | 60.6 | 34.1 | | | 60.0 | 18.0 | 379599 |
| 7049-T73 | 6" HF | 140 F | 59.5 | 32.0 | | | 58.7 | 19.6 | 379900 |
| 7049-T73 | Die Forging | 140 F | 74.5 | 29.7 | | | 61.8 | 23.9 | 410693 |
| 7049-T73 | Die Forging | 140 F | 67.0 | 28.5 | | | 66.1 | 19.4 | 410694 |
| 7049-T73 | Die Forging | 140 F | 71.6 | 33.6 | | | 67.6 | 23.2 | 410697A |
| 7049-T73 | Die Forging | 140 F | 74.4 | 30.7 | | | 67.1 | 22.7 | 410697C |
| 7049-T73 | Die Forging | 140 F | 73.1 | 33.1 | | | 66.3 | 22.1 | 410695 |
| 7049-T73 | Die Forging | 140 F | 65.5 | 33.8 | | | 64.7 | 24.6 | 410696 |
| 7049-T73 | Die Forging | 140 F | 75.9 | 36.4 | | | 64.9 | 25.2 | 410697B |
| MA52-T7X+ | Die #9078 | 150 F | 75.5 | 37.5* | | | 63.8 | 28.2* | 405046-9 |
| MA52-T7X+ | Die #9078 | 150 F | 60.3 | 34.0* | | | 51.0 | 30.8* | 405046-11 |
| MA52-T7X+ | Die #9078 | 212 F | 74.4 | 35.9* | | | 60.0 | 24.7* | 405047-9 |
| MA52-T7X+ | Die #9078 | 212 F | 57.6 | 33.7* | | | 48.4 | 24.2* | 405047-11 |

Note: See other tables for complete tensile properties.

+ This investigation.
* $K_Q$ not valid $K_{Ic}$.

Table XVIII

RESULTS OF CORROSION TESTS OF DIE 9078 FORGINGS EXPOSED IN AI FEDERAL TEST METHOD 823

| Quench Water Temp. | 2nd-Step Age - hr @ 340 F | Yield Strength ksi L | Yield Strength ksi S-T | Days to Failure, 0.125" ø Short-Transverse Tensile Bars: 25 ksi Stress | 30 ksi Stress | 35 ksi Stress | 40 ksi Stress | 45 ksi Stress | S. No. |
|---|---|---|---|---|---|---|---|---|---|
| | | | | | 7050 | | | | |
| 150 F | 17 | 78.4 | 66.8 | F83,83 | F28,49 | F9,30 | F7,9 | F18,21 | 405042-15 |
| | 17 | 72.7 | 64.4 | F70,10K | F63,10K | F15,54 | F21,42 | F28,33 | - 9 |
| | 25 | 68.4 | 61.6 | F84,10K | F42,10K | F60,69 | F36,83 | F36,83 | -16 |
| | 41 | 61.8 | 56.6 | 20K | 20K | 20K | F36,69 | F70,83 | -11 |
| 212 F | 10 | 72.8 | 61.6 | F70,10K | F60,62 | F19,36 | F7,36 | F6,28 | 405043- 9 |
| | 15 | 63.4 | 59.4 | 20K | F77,10K | F80,80 | F56,55 | F59,62 | -10 |
| | 30 | 62.4 | 55.5 | 20K | 20K | F72,83 | F60,84 | F18,36 | -11 |
| | | | | | 7049 | | | | |
| 150 F | 10 | 77.3 | 63.8 | 20K | F84,10K | F65,10K | F51,83 | F28,56 | 405044- 9 |
| | 17 | 71.3 | 60.6 | 20K | 20K | F83,10K | F83,83 | F60,10K | -10 |
| | 30 | 63.9 | 55.6 | 20K | 20K | F83,83 | 20K | 20K | -11 |
| | | | | | MA52 | | | | |
| 150 F | 17 | 75.5 | 63.8 | F60,84 | F22,42 | F18,22 | F18,22 | F9,11 | 405046- 9 |
| | 35 | 67.5 | 58.6 | F18,10K | 20K | F54,82 | F70,83 | F22,54 | -10 |
| | 60 | 60.3 | 51.0 | 20K | F82,10K | F72,10K | 20K | F84,10K | -11 |
| 212 F | 15 | 74.4 | 60.0 | F83,10K | F42,54 | F8,38 | F6,14 | F6,6 | 405047- 9 |
| | 25 | 69.8 | 57.4 | 20K | F41,62 | F30,54 | F33,43 | F23,20 | -10 |
| | 60 | 52.6 | 48.4 | 20K | 20K | 20K | F84,10K | F74,10K | -11 |

**Notes:** OK = survived 84 days in 3.5% NaCl alternate immersion test.

Alloys 7050 and MA52 solution heat treated 4 hr @ 880-890 F. Alloy 7049 solution heat treated 4 hr @ 865-875 F. First-step age on all forgings was 24 hr @ 240-252 F.

Table XIX

RESULTS OF CORROSION TESTS OF DIE 9078 FORGINGS EXPOSED IN NEW KENSINGTON ATMOSPHERE

| Quench Water Temp. | 2nd-Step Age - hr @ 340 F | Yield Strength ksi | | Days to Failure, 0.125" ø Short-Transverse Tensile Bars | | | | | |
|---|---|---|---|---|---|---|---|---|---|
| | | L | S-T | 25 ksi Stress | 30 ksi Stress | 35 ksi Stress | 40 ksi Stress | 45 ksi Stress | S. No. |
| | | | | | 7050 | | | | |
| 150 F | 17 | 78.4 | 66.8 | 20K | 20K | 20K | 20K | F342,10K | 405042-15 |
| | 17 | 72.7 | 64.4 | 20K | 20K | 20K | 20K | 20K | - 9 |
| | 25 | 68.4 | 61.6 | 20K | 20K | 20K | 20K | 20K | -16 |
| | 41 | 61.8 | 56.6 | 20K | 20K | 20K | 20K | 20K | -11 |
| 212 F | 10 | 72.8 | 61.6 | 20K | 20K | 20K | F274,10K | F307,10K | 405043- 9 |
| | 15 | 63.4 | 59.4 | 20K | 20K | F306,10K | 20K | 20K | -10 |
| | 30 | 62.4 | 55.5 | 20K | 20K | 20K | 20K | F350,10K | -11 |
| | | | | | 7049 | | | | |
| 150 F | 10 | 77.3 | 63.8 | 20K | 20K | 20K | 20K | 20K | 405044- 9 |
| | 17 | 71.3 | 60.6 | 20K | 20K | 20K | 20K | 20K | -10 |
| | 30 | 63.9 | 55.6 | 20K | 20K | 20K | 20K | 20K | -11 |
| | | | | | MA52 | | | | |
| 150 F | 17 | 75.5 | 63.8 | 20K | 20K | 20K | F350,350 | F319,350 | 405046- 9 |
| | 35 | 67.5 | 58.6 | 20K | 20K | 20K | 20K | F334,10K | -10 |
| | 60 | 60.3 | 51.0 | 20K | 20K | 20K | 20K | 20K | -11 |
| 212 F | 15 | 74.4 | 60.0 | 20K | 20K | 20K | 20K | F334,10K | 405047- 9 |
| | 25 | 69.8 | 57.4 | 20K | 20K | 20K | 20K | 20K | -10 |
| | 60 | 57.6 | 48.4 | 20K | 20K | 20K | 20K | 20K | -11 |

**Notes:** **OK = survived 1 year New Kensington atmosphere.**

**Alloys 7050 and MA52 solution heat treated 4 hr @ 880-890 F. Alloy 7049 solution heat treated 4 hr @ 865-875 F. First-step age on all forgings was 24 hr @ 240-252 F.**

Table XX

STRESS-CORROSION PERFORMANCE OF ALLOY 7049 IN ALCOA DIE 15093

| Second-Step Aging | Avg. Y.S. ksi | Specimen Locations | S-T Y.S. ksi | Specimen Type | No. Exp. | 3.5% NaCl Federal Test Method 823 Days to Failure: 45 ksi Stress | 30 ksi Stress | 25 ksi Stress | S. No. |
|---|---|---|---|---|---|---|---|---|---|
| 3 hrs @ 350 F | 66.6 | Strut | 70.9 | 1/8" bar | 3 | F29,29,43 | 30K | 30K | 413565 |
| | | Barrel | 67.1 | 1/8" bar | 2 | F22,25 | F71,82 | 20K | |
| | | Barrel | | C-ring | 1 | 10K | 10K | 10K | |
| 6 hrs @ 350 F | 60.4 | Strut | 63.6 | 1/8" bar | 3 | F42,46,10K | 30K | 30K | 413566 |
| | | Barrel | 60.4 | 1/8" bar | 2 | 20K | 20K | 20K | |
| | | Barrel | | C-ring | 1 | 10K | 10K | 10K | |
| 12 hrs @ 350 F | 53.0 | Strut | 56.0 | 1/8" bar | 3 | 30K | 30K | 30K | 413567 |
| | | Barrel | 56.0 | 1/8" bar | 2 | 20K | 20K | 20K | |
| | | Barrel | | C-ring | 1 | 10K | 10K | 10K | |

Notes: Quenched in water at 150 F.
First-step age 24 hours at 250 F.

OK = Specimen intact 84 days.

Solution heat treated 9-3/4 hr @ 880 F.

Table XXI

STRESS-CORROSION PERFORMANCE OF ALLOY MA52 IN ALCOA DIE 15093

| Second-Step Aging | Avg. Y.S. ksi | Specimen Locations | S-T Y.S. ksi | Specimen Type | No. Exp. | 3.5% NaCl Federal Test Method 823 Days to Failure: 45 ksi Stress | 30 ksi Stress | 25 ksi Stress | S. No. |
|---|---|---|---|---|---|---|---|---|---|
| 3 hrs @ 350 F | 74.1 | Strut | 72.8 | 1/8" bar | 3 | F2,2,5 | F3,12,19 | F27,38,38 | 413568 |
| | | Barrel | 71.4 | 1/8" bar | 2 | F2,3 | F3,3 | F18,18 | |
| | | Barrel | | C-ring | 1 | F84 | 10K | 10K | |
| 6 hrs @ 350 F | 68.6 | Strut | 67.5 | 1/8" bar | 3 | F21,21,26 | F34,44,57 | F64,64,64 | 413569 |
| | | Barrel | 67.5 | 1/8" bar | 2 | F38,38 | F81,82 | F84,10K | |
| | | Barrel | | C-ring | 1 | 10K | 10K | 10K | |
| 12 hrs @ 350 F | 62.4 | Strut | 59.7 | 1/8" bar | 3 | F44,59,64 | 30K | 30k | 413570 |
| | | Barrel | 61.7 | 1/8" bar | 2 | F84,10K | F82,10K | 20K | |
| | | Barrel | | C-ring | 1 | 10K | 10K | 10K | |

Notes: Quenched in water at 150 F.
First-step age 24 hours at 250 F.

OK = Specimen intact 84 days.

Solution heat treated 9-3/4 hr @ 880 F.

Table XXII

STRESS-CORROSION PERFORMANCE OF ALLOY 7050 IN ALCOA DIE 15093

| Second-Step Aging | Avg. Y.S. ksi | Specimen Locations | S-T Y.S. ksi | Specimen Type | No. Exp. | 3.5% NaCl Federal Test Method 825 Days to Failure: 45 ksi Stress | 30 ksi Stress | 25 ksi Stress | S. No. |
|---|---|---|---|---|---|---|---|---|---|
| 3 hrs @ 350 F | 76.6 | Strut | 76.2 | 1/8" bar | 3 | F2,2,3 | F3,4,10K | F3,7,40 | 413562 |
| | | Barrel | 73.8 | 1/8" bar | 2 | F4,12 | F57,78 | F61,10K | |
| | | Barrel | | C-ring | 1 | 10K | 10K | 10K | |
| 6 hrs @ 350 F | 69.0 | Strut | 67.6 | 1/8" bar | 3 | F13,27,44 | F82,82,82 | F78,20K | 413563 |
| | | Barrel | 70.1 | 1/8" bar | 2 | F6,13 | F3,54 | 20K | |
| | | Barrel | | C-ring | 1 | 10K | 10K | 10K | |
| 12 hrs @ 350 F | 60.0 | Strut | 59.3 | 1/8" bar | 3 | F47,20K | 30K | 30K | 413564 |
| | | Barrel | 61.0 | 1/8" bar | 2 | F47,61 | 20K | 20K | |
| | | Barrel | | C-ring | 1 | 10K | 10K | 10K | |

Notes: Quenched in water at 150 F.
First-step age 24 hours at 250 F.

OK = Specimen intact 84 days.

Solution heat treated 9-3/4 hr @ 880 F.

Table XXIII

RESULTS OF STRESS-CORROSION TESTS, EXPOSURE OF 7175-T7X DIE FORGINGS TO NEW KENSINGTON ATMOSPHERE

| Die No. | Short-Transverse Yield Strength ksi | 45 ksi Stress | 42 or 40 ksi Stress | 35 ksi Stress | 30 ksi Stress | 25 ksi Stress | 20 ksi Stress | S-No. |
|---|---|---|---|---|---|---|---|---|
| 40001 | 68.8 | -- | F383,383,402 | F391,426<br>10K800 | F441<br>20K800 | -- | -- | 377678 |
| 40001 | 68.7 | -- | F191,366,366 | F422,481,1064 | F1138,20K1225 | -- | -- | 369311 |
| 9078 | 68.7 | -- | F117,186,393 | F144,144,333 | F168,225,412 | -- | -- | 366379 |
| 40001 | 68.2 | -- | F348,369,426 | F672<br>20K800 | F720,20K800 | -- | -- | 377676 |
| 9619[2] | 67.9 | 20K215 | 20K215 | 20K215 | 20K215 | 20K215 | -- | 396362 |
| 9078 | 67.8 | -- | F116,138,138 | F83,144,195 | F195,442,515 | -- | -- | 366383 |
| 9078 | 67.8 | -- | F138,138,186 | F412,890,1096 | F1125<br>10K1255 | -- | -- | 366381 |
| 9078 | 67.8 | -- | F106,127,138 | F106,117,138 | F214,412,566 | -- | -- | 366385 |
| 9078 | 67.6 | -- | F307,321,429 | F266,358,789 | -- | -- | -- | 338106 |
| 9078 | 67.6 | -- | -- | F321,358,649 | -- | -- | -- | 338113 |
| 9078 | 67.4 | -- | F440,463,566 | F515,515,566 | -- | -- | -- | 366380 |
| 40002 | 67.3 | -- | F426<br>20K800 | F426,765<br>20K800 | F796<br>20K800 | -- | -- | 377483 |
| 9619 | 67.3 | -- | 20K215 | 20K215 | 20K215 | 20K215 | 20K215 | 396362 |
| 9078 | 66.6 | -- | 30K1255 | 30K1255 | -- | -- | -- | 366382 |
| 40007 | 66.4 | -- | 30K800 | 30K800 | 30K800 | -- | -- | 377544 |
| 9078 | 65.7 | -- | F475,487,537 | 30K1255 | -- | -- | -- | 366384 |
| 40006 | 65.4 | -- | 30K800 | 30K800 | 30K800 | -- | -- | 377543 |
| 9078 | 64.0 | -- | 30K1255 | 30K1255 | -- | -- | -- | 366386 |

Notes: 1. Specimens from S-396362 stressed at 40 ksi; specimens from all other S-Nos. stressed at 42 ksi.
2. Specimens from cylinder portion of forging.
3. Specimens from strut portion of forging.

Table XXIV

RESULTS OF CORROSION TESTS OF 7050 DIE FORGINGS EXPOSED IN A.I. FEDERAL TEST METHOD 823

| Die No. | Water Temp. | 2nd-Step Aging Hr @ °F | Short-Transverse Yield Strength ksi | Days to Failure, 0.125" ø Short-Transverse Tensile Bars: 45 ksi Stress | 40 ksi Stress | 35 ksi Stress | 30 ksi Stress | 25 ksi Stress | S-No. |
|---|---|---|---|---|---|---|---|---|---|
| 9078 | CWQ | 7/350 | 68.8 | -- | F2,4,6 | F6,13,13 | F6,6,13 | F12,20,23 | 395205 |
| | " | 9/350 | 68.4 | -- | F2,4,13 | F1,4,6 | F4,13,28 | F14,23,26 | 395202 |
| | " | 10/350 | 66.5 | F13,18,31 | F5,20K84 | F25,44,83 | F44,83,0K84 | F75,84,0K84 | 398887 |
| | " | 15/350 | 65.2 | F44,47,84 | F84,84,0K84 | F20,28,84 | F84,20K84 | F44,84,0K84 | 398888 |
| | " | 23/350 | 61.2 | 30K84 | 30K84 | 30K84 | 30K84 | 30K84 | 398889 |
| 15789 | CWQ | 4/350 | 72.0 | F1,1,1 | F1,1,2 | F2,2,2 | -- | F5,8,8 | 394709 |
| | " | 7/350 | 67.0 | F3,8,46 | F9,14,15 | F12,17,21 | -- | F28,46,52 | 394711 |
| | " | 12/350 | 60.7 | F8,79 | F42,56 | F50,53,79 | -- | 30K84 | 394710 |
| | " | 4/350 | 75.0 | F7,8,15 | F4,6,9 | F7,8,9 | -- | F22,22,22 | 394706 |
| | " | 7/350 | 71.0 | F15,26,41 | F25,29,37 | F37,46,46 | -- | F84,84,0K84 | 394708 |
| | " | 10/350 | 68.2 | F16,27 | F16,11 | F71,20K84 | -- | 30K84 | 394707 |
| | 150 F | 12/350 | 57.5 | F52,69,0K84 | -- | 30K84 | -- | -- | 412641 |
| 8457 | CWQ | 7/350 | 72.0 | F1,1,33 | F20,36,40 | F27,33,0K84 | F41,41,42 | 30K84 | 395191 |
| | " | 7/350 | 72.0 | F3,6,8 | F3,7,32 | F6,6,32 | F6,8,11 | F19,27,42 | 398724 |
| | " | 9/350 | 73.5 | F1,1,17 | F10,26,36 | F21,28,30 | F20,23,28 | F23,43,84 | 395190 |
| | " | 15/350 | 65.2 | F19,19,32 | F71,84,0K84 | F45,84,0K84 | 58,20K84 | F66,80,0K84 | 395191 |
| | " | 23/350 | 58.3 | F50,82,0K84 | 20K84 | F45,20K84 | 30K84 | 30K84 | 398724 |
| | 150 F | 12/350 | 64.2 | F39,0K84 | F61,0K84 | 20K84 | 20K84 | 20K84 | 405253 |
| 15093[2] | 150 F | 12/350 | 67.3 | 10K84 | 52 | 10K84 | 10K84 | 10K84 | 412850 |
| | " | 12/350 | 64.2 | 55,71 | 74,78 | 67,10K84 | 20K84 | 20K84 | 412850 |

Notes:
1. S-Nos. 394706, 394707, 394708 and 396351, 396353 mechanically stress relieved.
2. Specimens from die 15093 removed from strut (67.3 ksi YS) and (64.2 ksi YS).
3. All specimens removed perpendicular to and bisecting the parting plane as closely as possible to forged surfaces.

Forgings heat treated 16 hr @ 890 F, quenched as indicated and artificially aged 4 to 24 hr/250 F + indicated 2nd-step aging.

Table XXV

RESULTS OF CORROSION TESTS ON 7050 DIE FORGINGS
EXPOSED AT LEAST ONE YEAR IN NEW KENSINGTON ATMOSPHERE

| Die No. | 2nd-Step Aging-Hr @ 350 F | Short-Transverse Yield Strength ksi | Days to Failure 0.125" ø Short-Transverse Tensile Bars | | | | | S. No. |
|---|---|---|---|---|---|---|---|---|
| | | | 45 ksi Stress | 40 ksi Stress | 35 ksi Stress | 30 ksi Stress | 25 ksi Stress | |
| 9078 | 7 | 68.8 | -- | F123,241,264 | F237,306,308 | -- | F364,20K750 | 395205 |
| | 9 | 68.4 | -- | F286,20K750 | F409,431,431 | -- | F364,20K750 | 395202 |
| | 10 | 66.5 | F191,288 | F136,518,20K565 | F485,20K565 | 30K565 | 20K565 | 398887 |
| | 15 | 65.2 | F233,288,518 | 30K565 | F233,420,10K | F420,20K | F420,420,10K | 398888 |
| | 23 | 61.2 | 30K565 | 30K565 | 30K565 | 30K565 | 20K565 | 398889 |
| 15789 | 4 | 72.0 | F72,333,387 | F309,311,315 | F331,331,467 | -- | 30K770 | 394709 |
| | 7 | 67.0 | F360,382,400 | F113,352,352 | F360,402,430 | -- | 30K770 | 394711 |
| | 12 | 60.7 | F513,20K580 | 30K580 | 30K580 | -- | 30K580 | 394710 |
| | 4 | 75.0 | F123,400,0K770 | F387,395,0K770 | F420,20K770 | -- | 30K770 | 394706 |
| | 7 | 71.0 | 30K770 | 30K770 | 30K770 | -- | 30K770 | 394708 |
| | 10 | 68.2 | F248,513 | 30K580 | 30K580 | -- | 30K580 | 394707 |
| 8457 | 7 | 72.0 | F286,364,382 | F334,409,0K750 | F427,20K750 | -- | 30K750 | 395191 |
| | 7 | 72.0 | F87,111 | F120,148 | F191,0K565 | F210,258,0K565 | F191,0K565 | 398724 |
| | 9 | 73.5 | F383,20K750 | F248,334,427 | F348,364,374 | -- | 30K750 | 395190 |
| | 15 | 65.2 | F111,162 | F363,0K565 | 20K565 | 30K565 | 30K565 | 395191 |
| | 23 | 58.3 | 20K565 | 20K565 | 20K565 | 30K565 | 30K565 | 398724 |

Note: S. Nos. 394206, 394207, and 394208 were mechanically stress relieved.

Forgings heat treated 16 hr @ 890 F, cold-water quenched and artificially aged 4 hr/250 F + indicated 2nd-step aging.

Table XXVI

RESULTS OF CORROSION TESTS OF 7049-T7X DIE FORGINGS EXPOSED 84 DAYS TO A.I. FEDERAL TEST METHOD 823

| Die No. | 2nd-Step[1.] Age | Short-Trans Yield Strength ksi | Days to Failure, 0.125" ø Short-Transverse Tensile Bars: 45 ksi Stress I.D. | 45 ksi Stress O.D. | 35 ksi Stress I.D. | 35 ksi Stress O.D. | 25 ksi Stress I.D. | 25 ksi Stress O.D. | S-No. |
|---|---|---|---|---|---|---|---|---|---|
| 15621 | 14/320 | 73.4 | F29,29,54 | F34,35,36 | 1F61<br>20K84 | F39,44,54 | -- | -- | 398957-1 |
| 15621 | 18/320 | 69.6 | F31,35,35 | F31,35,36 | -- | -- | -- | -- | 398957-2 |
| 15621 | 22/320 | 64.6 | F43,44,66 | F38,46,46 | -- | -- | -- | -- | 398957-3 |
| 15621 | 26/320 | -- | 2F46,51<br>10K84 | F43,66,73 | -- | -- | -- | -- | 398957-4 |
| 16347 | 14/320 | 71.2 | F30,33,44 | F28,34,39 | 2F58,63<br>10K84 | F50,52,56 | -- | -- | 398956-1 |
| 16347 | 18/320 | 67.8 | F38,73,74 | F38,43,51 | -- | -- | -- | -- | 398956-2 |
| 16347 | 22/320 | 62.2 | F36,56,84 | F35,36,51 | -- | -- | -- | -- | 398956-3 |
| 16347 | 26/320 | 66.2 | F36,64,84 | F36,51,64 | -- | -- | -- | -- | 398956-4 |
| 16347 | 22/320 | 70.6 | 2F63,84<br>10K84 | F63,70,75 | 20K84 | 20K84 | 20K84 | 20K84 | 404714 |

All forgings heat treated @ 875 F, quenched in water @ 140 F and artificially aged 24 hr/250 F.
plus indicated 2nd-step. S-Nos. 398956 and 398957 aged 14 hr/320 F at Cleveland.
plus additional time @ 320 F at ARL; S. No. 404714 aged 22 hr/320 F at Cleveland.

Note: 1. Hr @ temp °F.

Table XXVII

RESULTS OF STRESS-CORROSION TESTS ON 7049-T7X DIE FORGINGS DIE NO. 9078

| 2nd-Step[2] Age | Short-Transverse Yield Strength ksi | Days to Failure - Single 0.125" Dia. Short-Trans. Tensile Bars: 84 Days Exposure to A.I.[1] 45 ksi Stress | 35 ksi Stress | 25 ksi Stress | Exposed to New Ken Atm. 2-3-71 45 ksi Stress | 35 ksi Stress | 25 ksi Stress | Dash No. |
|---|---|---|---|---|---|---|---|---|
| | | S-399205 - 7049 Containing 0.14 Fe | | | | | | |
| 20/300 | 75.0 | F2 | F2 | F2 | F64 | F91 | F143 | -1 |
| 40/300 | 73.2 | F3 | F5 | F2 | F100 | F72 | F571 | -2 |
| 60/300 | 69.4 | F3 | F3 | F41 | F64 | F160 | F175 | -3 |
| 14/320 | 72.8 | F2 | F17 | F45 | F64 | F124 | F143 | -4 |
| 28/320 | 69.2 | F10 | OK84 | F38 | F142 | F156 | OK575 | -5 |
| 42/320 | 59.8 | F39 | F65 | OK84 | F195 | OK575 | OK575 | -6 |
| 10/340 | 66.3 | F13 | F32 | F84 | F118 | OK575 | OK575 | -7 |
| 20/340 | 58.5 | F48 | F48 | OK84 | OK575 | OK575 | OK575 | -8 |
| 30/340 | 54.1 | F84 | F42 | OK84 | OK575 | OK575 | OK575 | -9 |
| 6/360 | 58.9 | F34 | F42 | F84 | F258 | OK575 | OK575 | -10 |
| 12/360 | 52.5 | F63 | OK84 | OK84 | OK575 | OK575 | OK575 | -11 |
| 18/360 | 47.2 | F80 | F73 | OK84 | OK575 | OK575 | OK575 | -12 |
| | | S-399204 - 7049 Containing 0.22 Fe | | | | | | |
| 20/300 | 72.8 | F2 | F2 | F3 | F36 | F169 | F161 | -1 |
| 40/300 | 71.6 | F2 | F3 | F28 | F126 | F126 | F169 | -2 |
| 60/300 | 69.2 | F4 | F7 | F41 | F147 | F140 | OK575 | -3 |
| 14/320 | 72.4 | F3 | F3 | F31 | F118 | F120 | F118 | -4 |
| 28/320 | 67.1 | F3 | F16 | F53 | F543 | OK575 | OK575 | -5 |
| 42/320 | 58.1 | F48 | F69 | OK84 | OK575 | OK575 | OK575 | -6 |
| 10/340 | 64.6 | F28 | F42 | F84 | F196 | OK575 | OK575 | -7 |
| 20/340 | 56.9 | F31 | F84 | OK84 | OK575 | OK575 | OK575 | -8 |
| 40/340 | 52.8 | F84 | F78 | OK84 | OK575 | OK575 | OK575 | -9 |
| 6/360 | 58.5 | F40 | F71 | F84 | OK575 | OK575 | OK575 | -10 |
| 12/360 | 51.2 | F84 | OK84 | OK84 | OK575 | OK575 | OK575 | -11 |
| 18/360 | 46.3 | OK84 | OK84 | OK84 | OK575 | OK575 | OK575 | -12 |

Notes: 1. Federal Test Method 823.
2. Hr @ temp °F.

Forgings reheat treated 4 hr/875 F, quenched in water @ 140 F, and artificially aged 24 hr/250 F + indicated 2nd-step.

Table XXVIII

RESULTS OF STRESS-CORROSION TESTS ON 7049-T7X DIE FORGINGS
S-399301, DIE NO. 9078 PROCESSED BY SPECIAL
FABRICATING PRACTICE

| 2nd-Step[2] Age | Short-Transverse Yield Strength ksi | Days to Failure Single 0.125" ø Short-Transverse Tensile Bars | | | | | | |
|---|---|---|---|---|---|---|---|---|
| | | 84 Days Exposure to A.I.[1] | | | Exposed to New Ken Atm 11-24-71 | | | |
| | | 45 ksi Stress | 35 ksi Stress | 25 ksi Stress | 45 ksi Stress | 35 ksi Stress | 25 ksi Stress | Dash No. |
| 40/300 | 79.0 | F1 | F1 | F2 | F56 | F44 | F141 | -1 |
| 70/300 | 75.9 | F2 | F2 | F5 | F91 | F179 | F193 | -2 |
| 100/300 | 72.4 | F5 | F8 | F84 | F181 | F243 | OK282 | -3 |
| 14/320 | 79.2 | F1 | F1 | F3 | F56 | F65 | N.E. | -4 |
| 28/320 | 71.7 | F24 | F36 | OK84 | F218 | OK282 | OK282 | -5 |
| 42/320 | 69.8 | F19 | F22 | F37 | F214 | F231 | OK282 | -6 |
| 4/340 | 77.8 | F1 | F1 | F2 | F65 | F56 | F153 | -7 |
| 12/340 | 71.7 | F25 | F14 | F37 | F237 | F218 | OK282 | -8 |
| 20/340 | 66.6 | F22 | F25 | F84 | OK282 | OK282 | OK282 | -9 |
| 2/360 | 75.4 | F4 | F10 | F24 | F126 | F225 | F258 | -10 |
| 7/360 | 63.9 | F22 | F84 | OK84 | OK282 | OK282 | OK282 | -11 |
| 12/360 | 57.8 | F52 | OK84 | OK84 | OK282 | OK282 | OK282 | -12 |

Forging reheat treated 4 hr @ 930 F; quenched in cold water and artificially aged 24 hr/250 F + indicated 2nd-step.

Notes:
1. Federal Test Method 823.
2. Hr @ temp °F.
3. N.E. = None exposed.

Table XXIX

RESULTS OF CORROSION TESTS ON 7049-T7X DIE FORGINGS DIE 9078

| Heat-Treat Temp. | Quench Water Temp. | 2nd-Step Age | Short-Trans Yield Strength ksi | Days to Failure, 0.125" ϕ Short-Trans. Tensile Bars: 45 ksi Stress | 40 ksi Stress | 35 ksi Stress | 30 ksi Stress | 25 ksi Stress | S-No. |
|---|---|---|---|---|---|---|---|---|---|
| Exposed 84 days to A.I. | | | | | | | | | |
| 930 F | 70 F | 4/350 | 69.8 | F43,66 | F17,30 | F42,66 | -- | -- | 398775 |
| 930 F | 70FF | 8/350 | 63.0 | F30,55 | F52,66 | 20K84 | -- | -- | 398776 |
| 930 F | 70 F | 14/320 | 75.4 | F5,30 | F8,19 | F5,11 | -- | -- | 398777 |
| 875 F | 140 F | 14/320 | 69.6 | F6,7 | F7,11 | F14,14 | -- | --- | 398778 |
| 875 F | 140 F | 14/320 | 68.6 | F5,5 | F6,7 | F5,7 | -- | -- | 398779 |
| Exposed to New Kensington Atmosphere | | | | | | | | | |
| 930 F | 70 F | 4/350 | 69.8 | F184,206 | F226,226 | F233,240 | F233,268 | F249,262 | 398775 |
| 930 F | 70 F | 8/350 | 63.0 | F233,249 | F226,528<br>10K669 | F249,280 | F249,528<br>10K669 | 1F249<br>10K669 | 398776 |
| 930 F | 70 F | 14/320 | 75.4 | F51,184 | F169,184 | F206,211 | F268,587<br>10K669 | F193,211 | 398777 |
| 875 F | 140 F | 14/320 | 69.6 | F211,240 | F226,228 | F249,594<br>10K669 | F262,526<br>10K669 | 1F548<br>10K669 | 398778 |
| 875 F | 140 F | 14/320 | 68.6 | F169,226 | F240,249 | F240,288 | 1F240<br>10K669 | F336,661<br>10K669 | 398779 |

S-No. 398775 through 398779 exposed 11-2-70 to N.K. atmosphere.
S-No. 398775, 398776 and 398777 fabricated using special practice.
S-No. 398775 and 398776 heat treated 8 hr @ 930 F at plant and cold-water quenched, 1st-step aging 6 hr/225 F.
S-No. 398777 reheat treated 4 hr @ 930 F at ARL and cold-water quenched, S-No. 398778 and 398779 reheat treated 4 hr @ 875 F at ARL and quenched in water @ 140 F; 1st-step aging 24 hr/250 F.
S-No. 398775 through 398776 and 398779 contained 0.14 Fe; S-No. 398778 contained 0.22 Fe.

Note: 1. Hr @ temp °F.

Table XXX

EFFECT OF FORGING TYPE AND TEST CONDITIONS ON MEAN CRITICAL YIELD STRENGTH OF 7050 DIE FORGINGS

| Forging Type | Exposure | Mean Critical S-T Y.S. at Indicated Stress Level | | | | |
|---|---|---|---|---|---|---|
| | | 25 ksi | 30 ksi | 35 ksi | 40 ksi | 45 ksi |
| Web-Flange | 10 days AI | 75.1 | 73.4 | 71.7 | 70.0 | 68.3 |
| | 20 days AI | 73.3 | 71.7 | 70.2 | 78.6 | 67.1 |
| | 30 days AI | 70.5 | 69.5 | 68.5 | 67.4 | 66.4 |
| | 40 days AI | 70.3 | 68.7 | 67.1 | 65.5 | 63.9 |
| | 50 days AI | 69.1 | 67.5 | 65.9 | 64.3 | 62.7 |
| | 60 days AI | 67.6 | 66.3 | 65.0 | 63.6 | 62.3 |
| | 70 days AI | 67.9 | 66.1 | 64.2 | 62.3 | 60.4 |
| | 80 days AI | 67.7 | 65.6 | 63.6 | 61.6 | 59.6 |
| | 84 days AI | 65.7 | 63.7 | 61.7 | 59.8 | 57.8 |
| Landing Gear | 10 days AI | 75.1 | 74.3 | 73.5 | 72.8 | 72.0 |
| | 20 days AI | 75.7 | 74.1 | 72.6 | 71.0 | 69.5 |
| | 30 days AI | 76.0 | 74.1 | 72.3 | 70.4 | 68.6 |
| | 40 days AI | 75.1 | 73.4 | 71.8 | 70.1 | 68.4 |
| | 50 days AI | 75.6 | 72.7 | 69.9 | 67.0 | 64.1 |
| | 60 days AI | 74.8 | 71.8 | 68.9 | 65.9 | 63.0 |
| | 70 days AI | 72.6 | 70.4 | 68.1 | 65.8 | 63.5 |
| | 80 days AI | 73.2 | 70.5 | 67.7 | 64.9 | 62.2 |
| | 84 days AI | 71.9 | 69.6 | 67.3 | 65.0 | 62.7 |
| Web-Flange | 100 days NK | 88.3 | 85.6 | 82.8 | 80.1 | 77.4 |
| | 150 days NK | 84.9 | 81.7 | 78.4 | 75.2 | 72.0 |
| | 290 days NK | 80.9 | 78.5 | 76.1 | 73.7 | 71.3 |
| | 250 days NK | 79.3 | 77.1 | 74.9 | 72.7 | 70.5 |
| | 300 days NK | 74.9 | 74.6 | 74.3 | 74.1 | 73.8 |
| | 365 days NK | 79.6 | 77.0 | 74.5 | 71.9 | 69.3 |
| | 400 days NK | 80.0 | 76.7 | 73.4 | 70.1 | 66.8 |
| | 450 days NK | 76.5 | 73.9 | 71.4 | 68.8 | 66.3 |
| | 500 days NK | 75.6 | 73.4 | 71.1 | 68.8 | 66.6 |

Notes: AI = 3.5% NaCl alternate immersing test according to Federal Test Method 823
NK = inland industrial atmosphere at New Kensington, Pa.

Table XXXI

EFFECT OF FORGING TYPE AND TEST CONDITIONS ON MEAN CRITICAL YIELD STRENGTH OF 7049 DIE FORGINGS

| Forging Type | Exposure | Mean Critical S-T Y.S. at Indicated Stress Level | | | | |
|---|---|---|---|---|---|---|
| | | 25 ksi | 30 ksi | 35 ksi | 40 ksi | 45 ksi |
| Web-Flange | 10 days AI | 74.8 | 73.3 | 71.9 | 70.4 | 69.0 |
| | 20 days AI | 73.2 | 72.0 | 70.8 | 69.6 | 68.4 |
| | 30 days AI | 72.1 | 70.4 | 68.6 | 66.9 | 65.1 |
| | 40 days AI | 71.6 | 69.5 | 67.3 | 65.1 | 63.0 |
| | 50 days AI | 67.8 | 65.7 | 63.7 | 61.6 | 59.6 |
| | 60 days AI | 68.5 | 65.7 | 63.0 | 60.3 | 57.5 |
| | 70 days AI | 67.9 | 64.6 | 61.4 | 58.2 | 54.9 |
| | 80 days AI | 67.9 | 63.8 | 59.8 | 55.7 | 51.7 |
| | 84 days AI | 64.3 | 60.7 | 57.1 | 53.5 | 49.9 |
| Langing Gear | 30 days AI | 88.2 | 84.4 | 80.6 | 76.8 | 73.0 |
| | 40 days AI | 87.7 | 83.0 | 78.4 | 73.7 | 69.1 |
| | 60 days AI | 77.5 | 74.6 | 71.7 | 68.8 | 65.9 |
| | 70 days AI | 75.4 | 72.6 | 69.8 | 67.0 | 64.2 |
| | 80 days AI | 74.5 | 71.7 | 69.0 | 66.3 | 63.5 |
| | 84 days AI | 73.7 | 70.7 | 67.6 | 64.6 | 61.6 |
| Web-Flange | 100 days NK | 80.9 | 79.0 | 77.0 | 75.1 | 73.2 |
| | 150 days NK | 77.5 | 75.9 | 74.3 | 72.8 | 71.2 |
| | 200 days NK | 76.2 | 74.1 | 72.0 | 69.9 | 67.8 |
| | 250 days NK | 70.4 | 70.3 | 70.3 | 70.2 | 70.1 |
| | 300 days NK | 69.9 | 68.0 | 66.2 | 64.3 | 62.4 |
| | 365 days NK | 69.8 | 68.0 | 66.1 | 64.3 | 62.5 |
| | 400 days NK | 69.8 | 67.6 | 65.4 | 63.2 | 61.0 |
| | 450 days NK | 69.7 | 67.4 | 65.2 | 62.9 | 60.7 |
| | 500 days NK | 69.7 | 67.4 | 65.2 | 62.9 | 60.7 |

Notes: AI = 3.5% NaCl alternate immersion according to Federal Test Method 823.
NK = Inland industrial atmosphere at New Kensington, Pa.

Table XXXII

EFFECT OF FORGING TYPE AND TEST CONDITIONS ON MEAN CRITICAL YIELD STRENGTH OF MA52 DIE FORGINGS

| Forging Type | Exposure | Mean Critical S-T Y.S. at Indicated Stress Level | | | | |
|---|---|---|---|---|---|---|
| | | 25 ksi | 30 ksi | 35 ksi | 40 ksi | 45 ksi |
| Web-Flange | 10 days AI | 69.2 | 67.1 | 65.0 | 63.0 | 60.9 |
| | 20 days AI | 63.9 | 62.8 | 61.7 | 60.7 | 59.6 |
| | 30 days AI | 63.5 | 61.9 | 60.3 | 58.6 | 57.0 |
| | 40 days AI | 63.5 | 61.7 | 59.8 | 58.0 | 56.2 |
| | 50 days AI | 62.5 | 60.8 | 59.1 | 57.4 | 55.6 |
| | 60 days AI | 61.2 | 59.6 | 58.0 | 56.4 | 54.8 |
| | 70 days AI | 60.6 | 58.8 | 57.0 | 55.2 | 53.4 |
| | 80 days AI | 60.8 | 58.5 | 56.1 | 53.7 | 51.4 |
| | 84 days AI | 58.9 | 56.2 | 53.6 | 51.0 | 48.3 |
| Landing Gear | 10 days AI | 81.5 | 76.3 | 71.0 | 65.7 | 60.5 |
| | 20 days AI | 69.6 | 69.4 | 69.3 | 69.1 | 68.9 |
| | 30 days AI | 74.8 | 71.3 | 67.8 | 64.3 | 60.8 |
| | 40 days AI | 71.0 | 68.2 | 65.5 | 62.7 | 60.0 |
| | 50 days AI | 69.3 | 65.6 | 63.9 | 61.2 | 58.5 |
| | 60 days AI | 68.6 | 65.7 | 62.8 | 59.8 | 56.9 |
| | 70 days AI | 65.3 | 63.1 | 61.0 | 58.8 | 56.7 |
| | 80 days AI | 65.5 | 63.2 | 61.0 | 58.8 | 56.6 |
| | 84 days AI | 63.8 | 61.3 | 58.7 | 56.2 | 53.6 |
| Web-Flange | 365 days NK | 76.3 | 72.4 | 68.6 | 64.7 | 60.8 |

Notes: AI = 3.5% NaCl alternate immersion according to Federal Test Method 823.
NK = Inland industrial atmosphere at New Kensington, Pa.

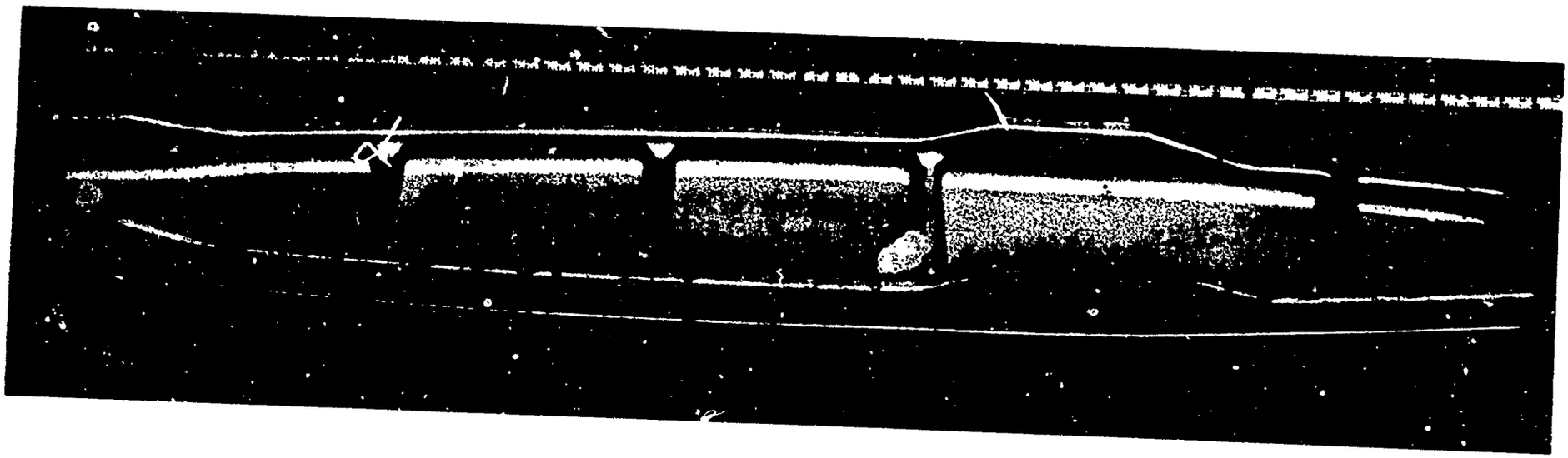

FIGURE 1 BOEING RIB FORGING HINGE SUPPORT ELEVATOR STATION
ALCOA DIE 9078

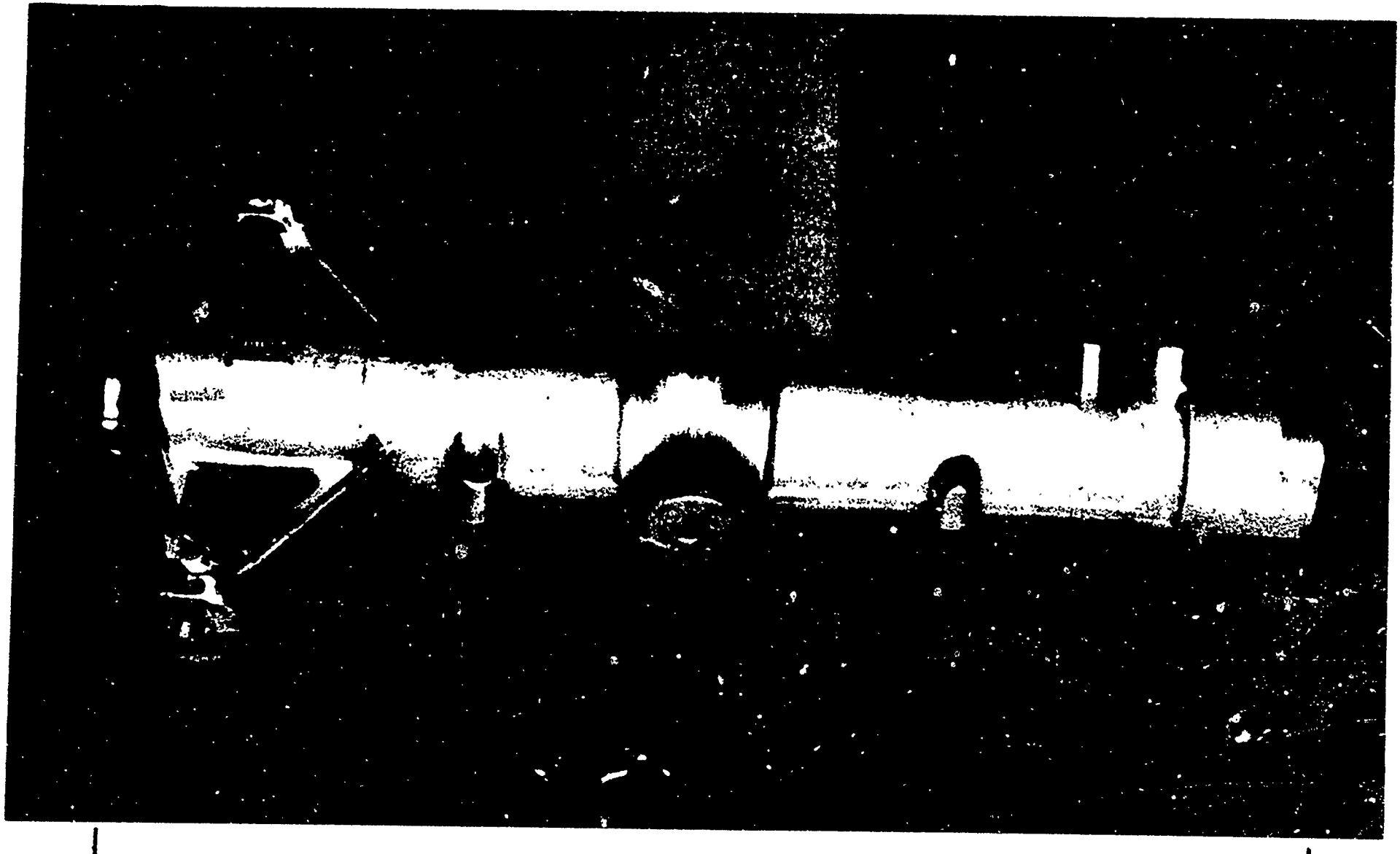

42"

FIGURE 2 McDONNELL--DOUGLAS NOSE LANDING GEAR CYLINDER

ALCOA DIE 15093

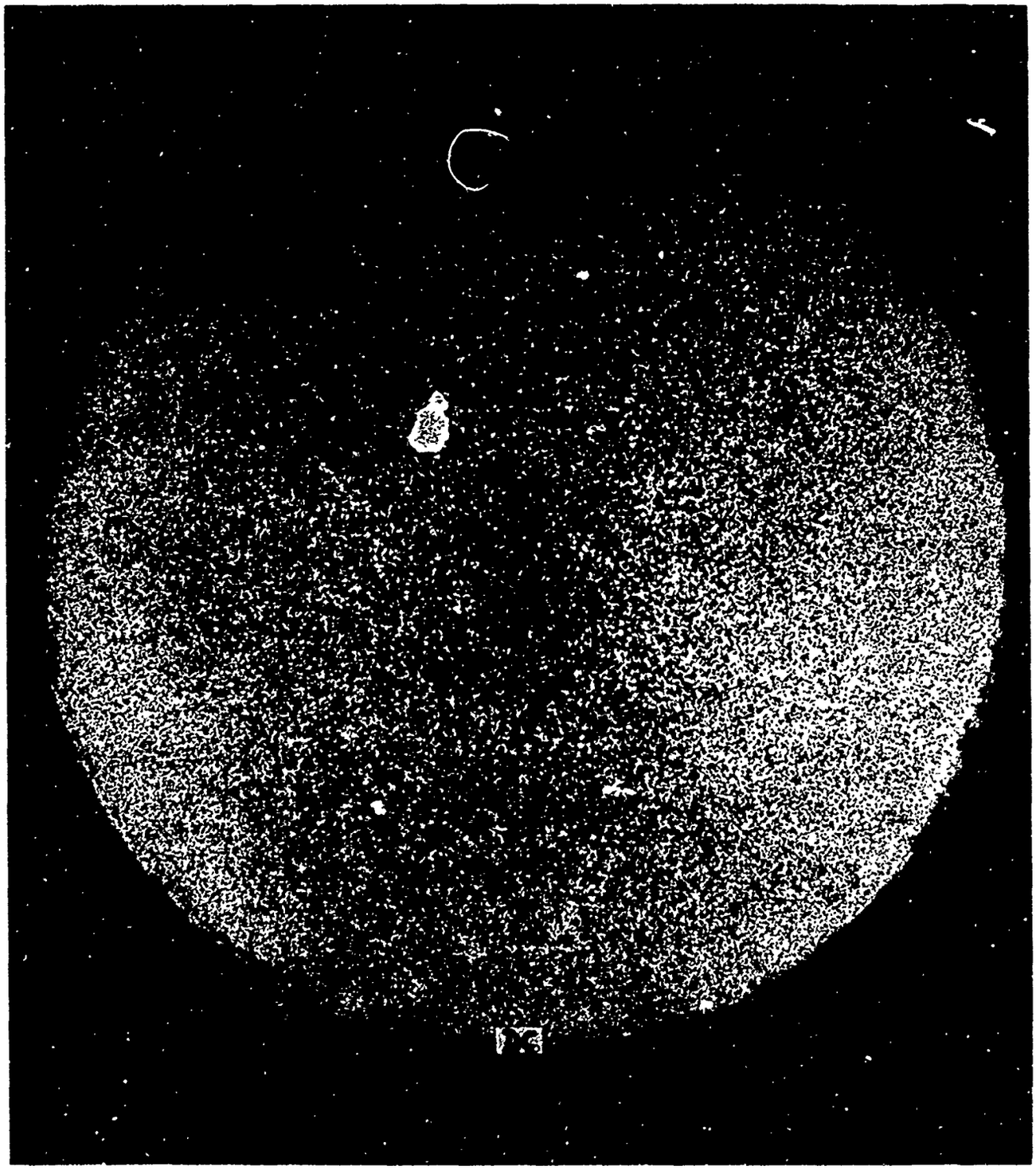

FIGURE 3 7050 INGOT–15" DIAMETER

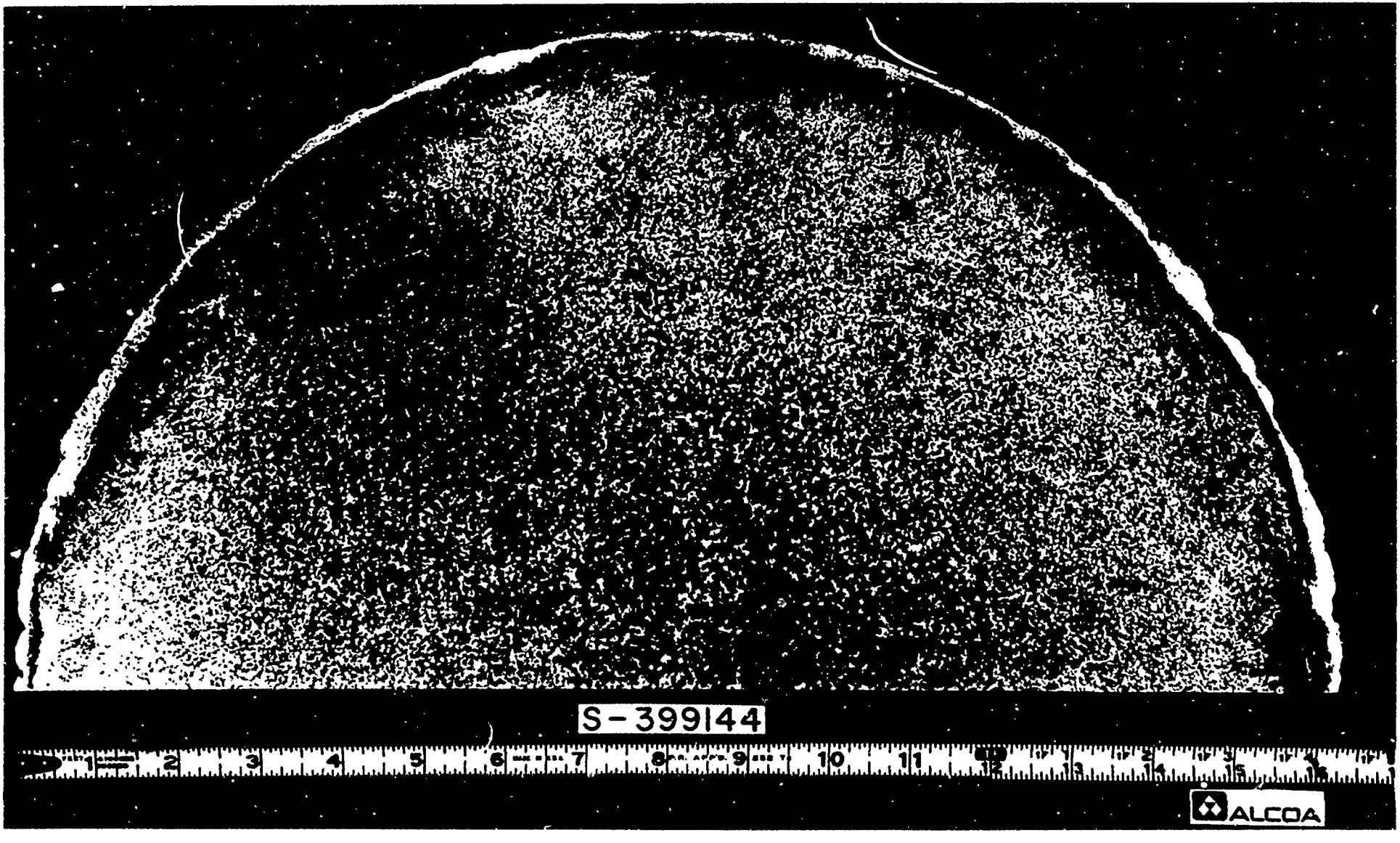


FIGURE 4 7049 INGOT—16" DIAMETER

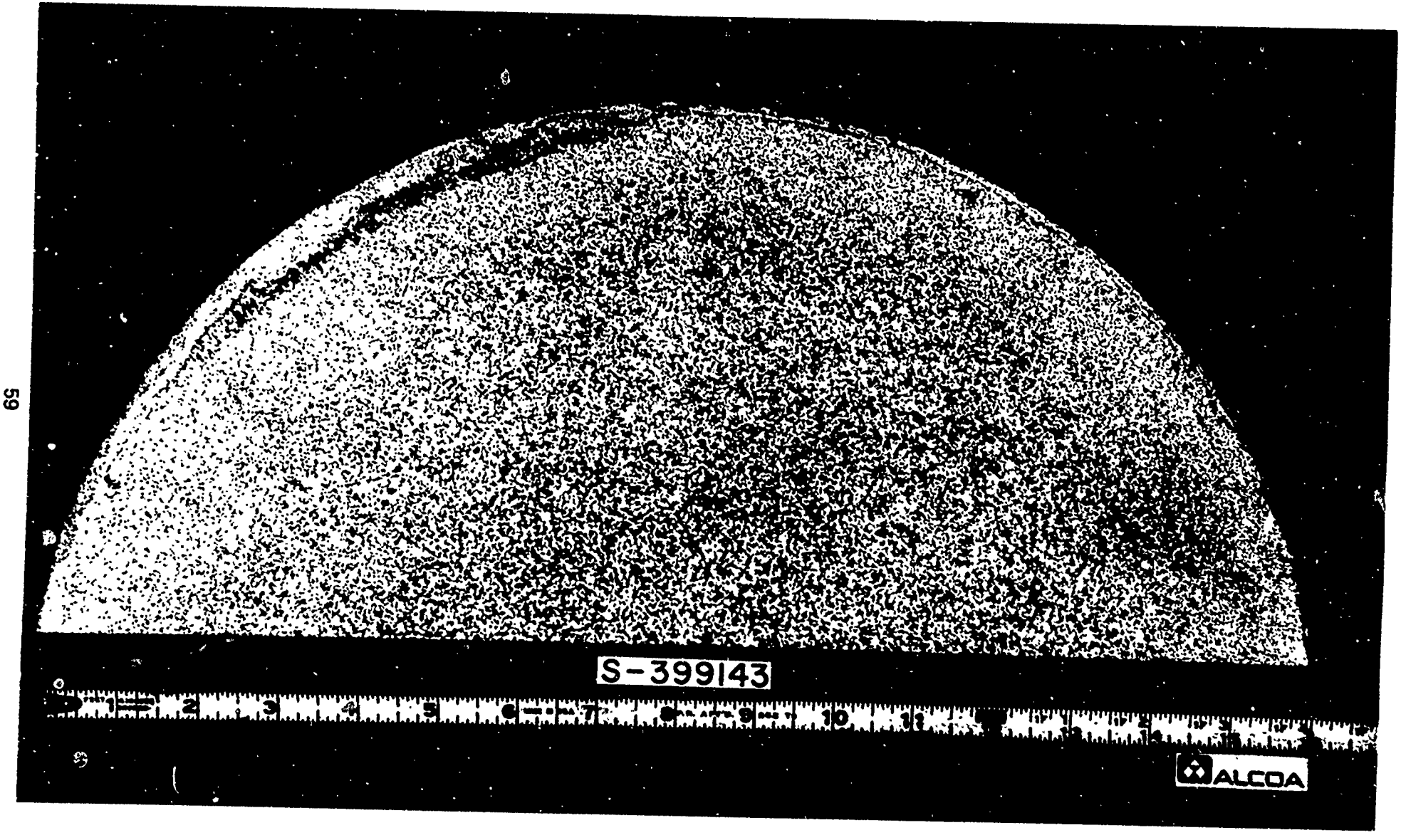


FIGURE 5 MA52 INGOT—16" DIAMETER

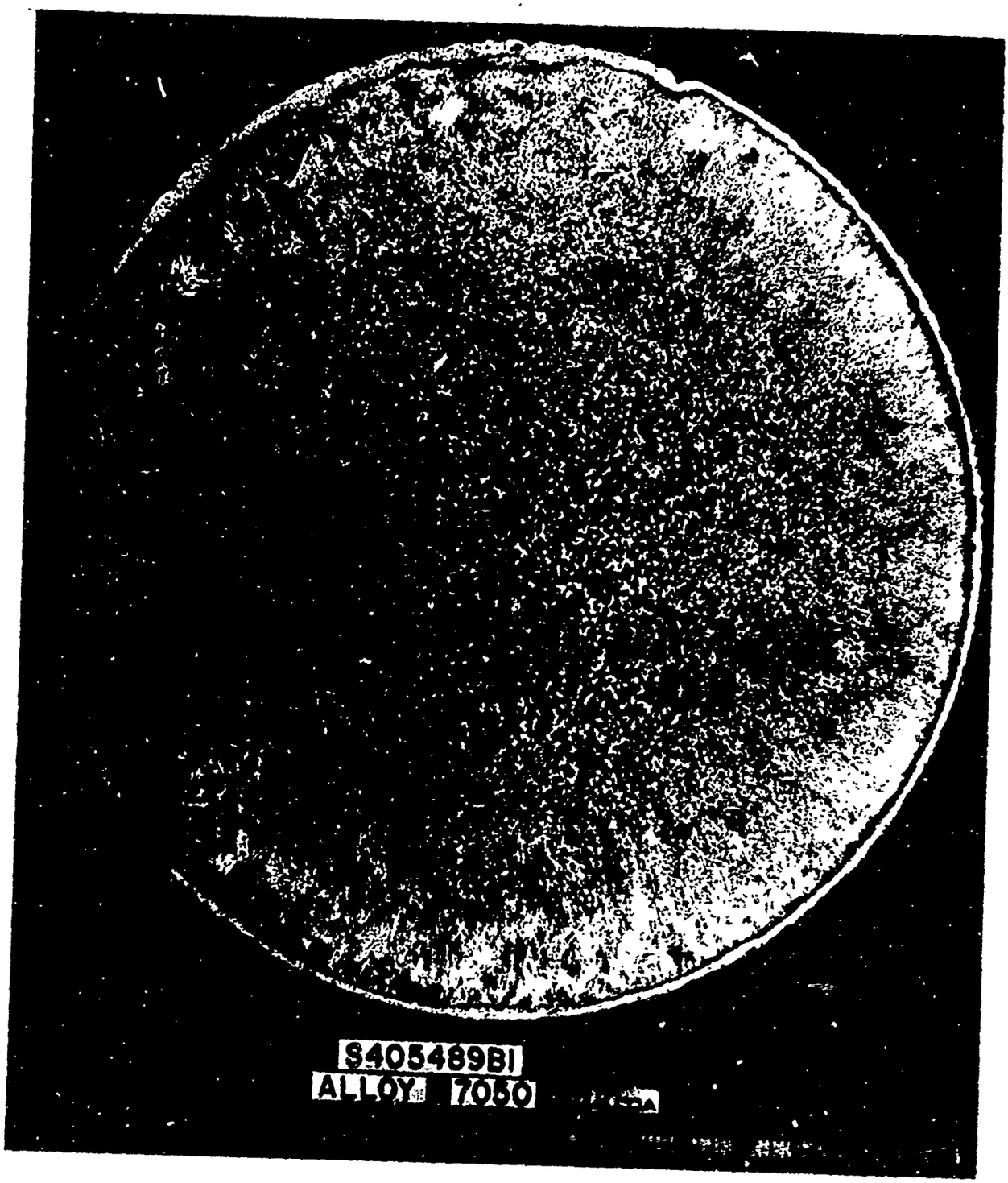


FIGURE 6 MACROSTRUCTURE OF 7050 INGOT

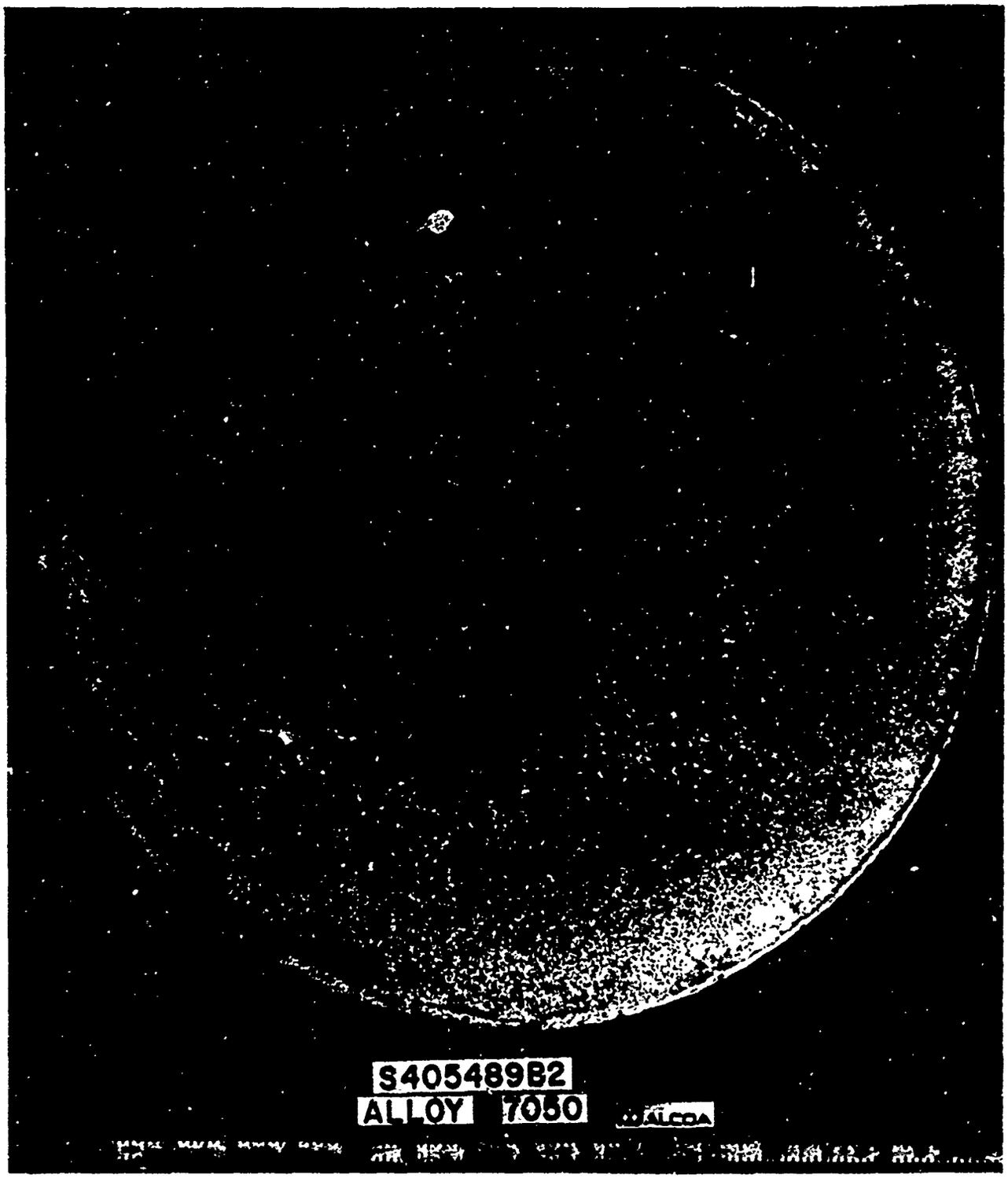


FIGURE 7 MACROSTRUCTURE OF 7050 INGOT

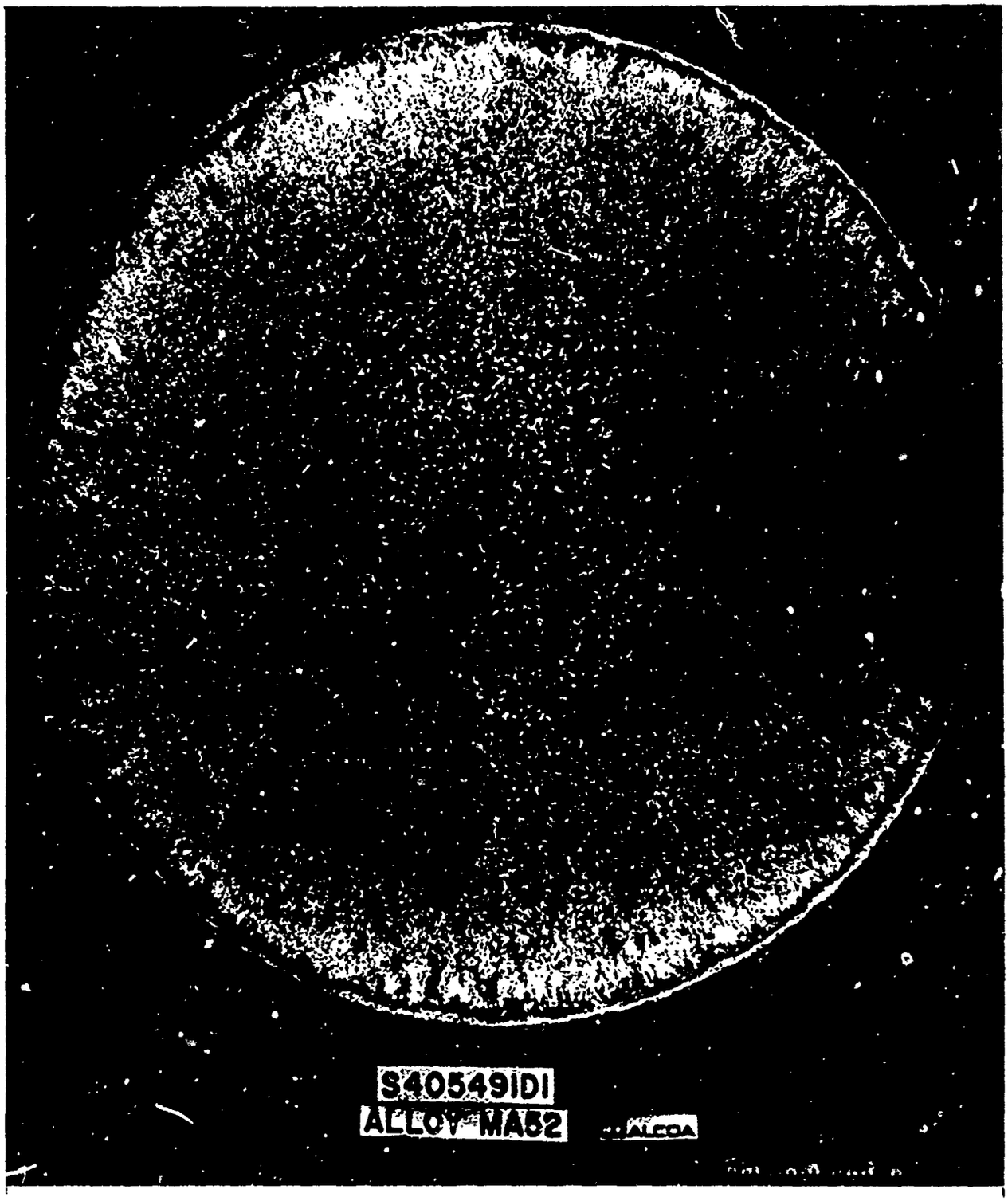


FIGURE 8 MACROSTRUCTURE OF MA52 INGOT

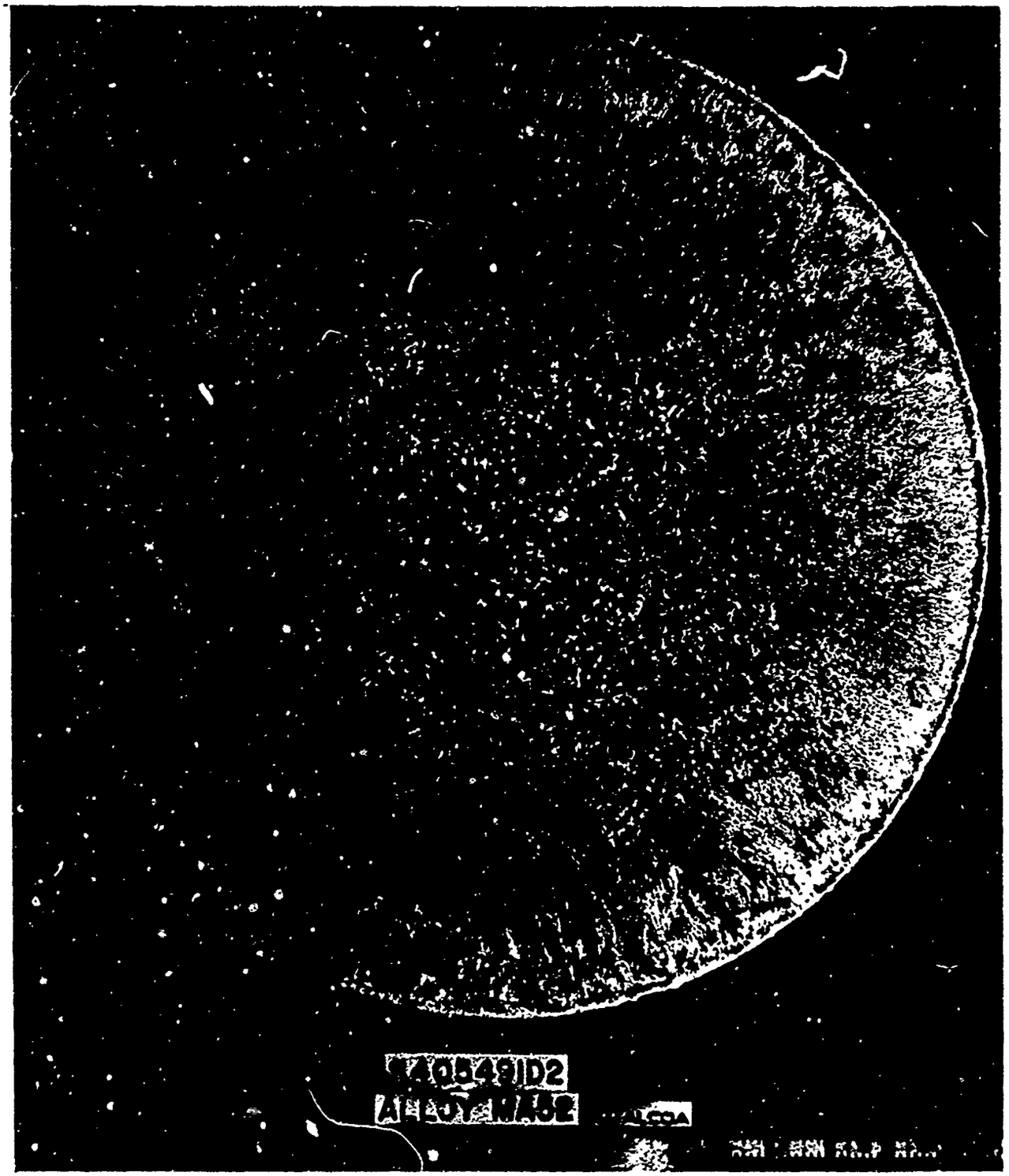

FIGURE 9 MACROSTRUCTURE OF MA52 INGOT

FIGURE 10 MACROSTRUCTURE OF 7049 INGOT

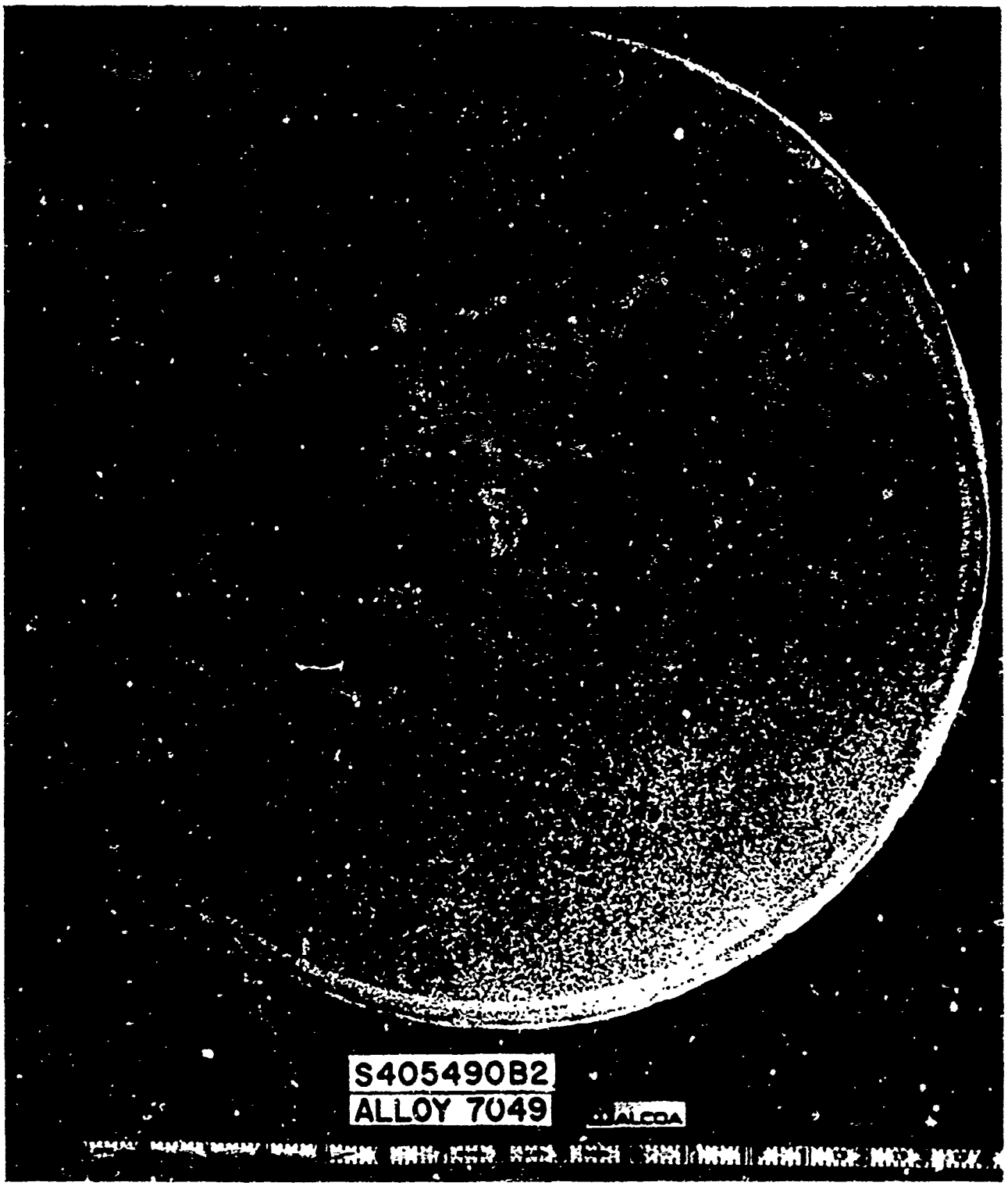


FIGURE 11 MACROSTRUCTURE OF 7049 INGOT

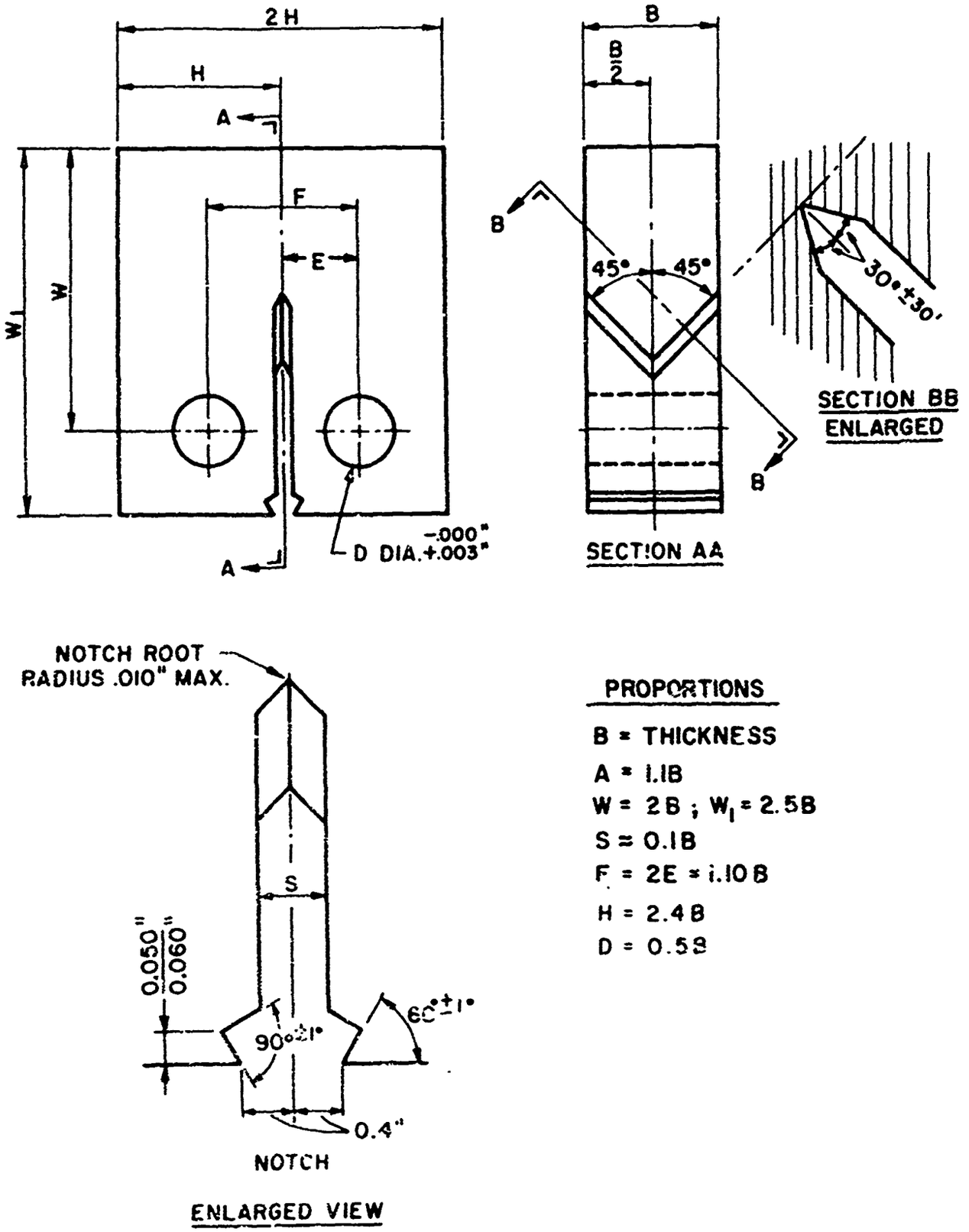


FIG. 12 COMPACT TENSION FRACTURE TOUGHNESS SPECIMEN

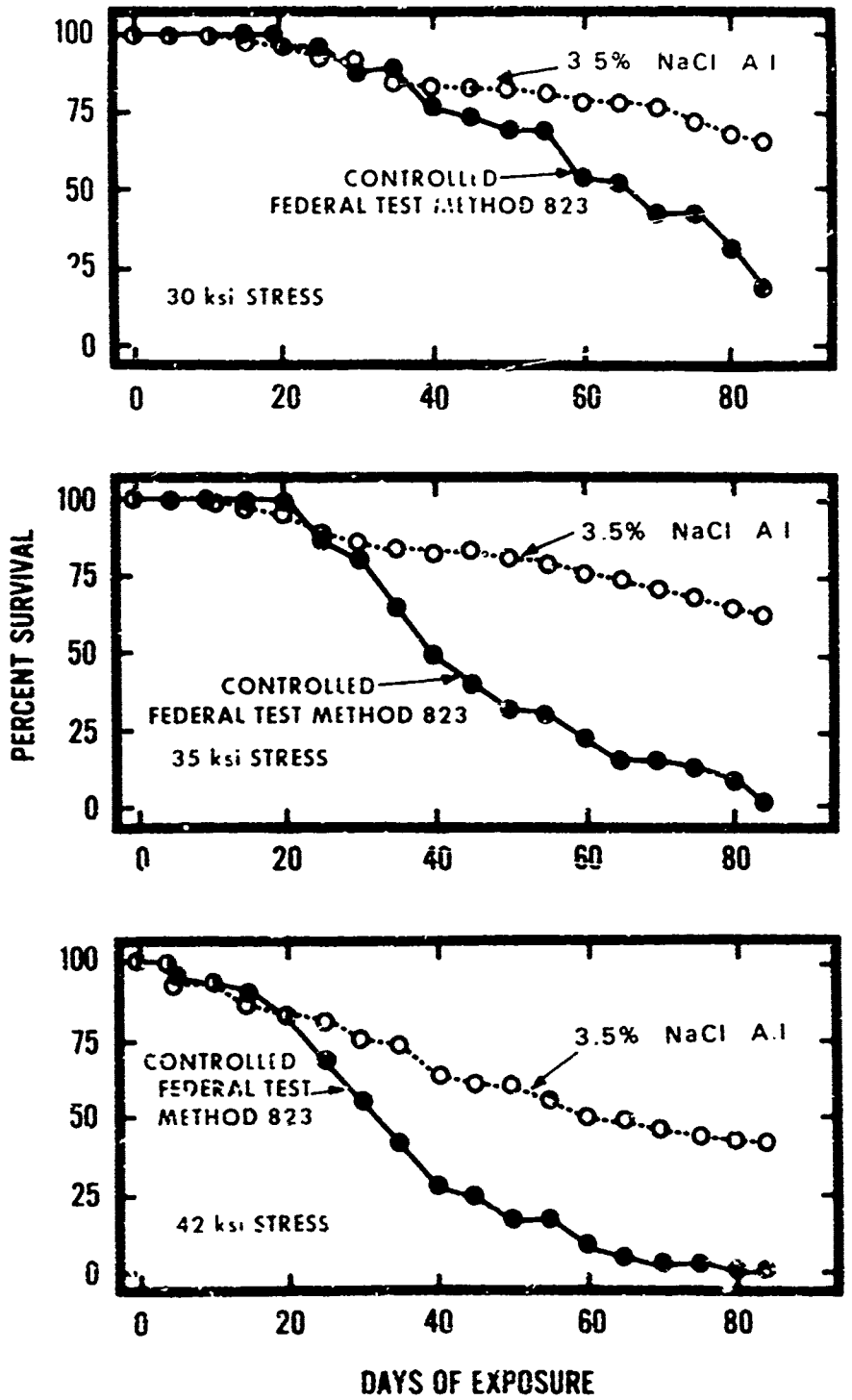


Fig. 13 MEASURED PERCENT SURVIVAL vs DAYS TO FAILURE FOR 7175-T736 DIE FORGINGS EXPOSED 84 DAYS TO ALTERNATE IMMERSION

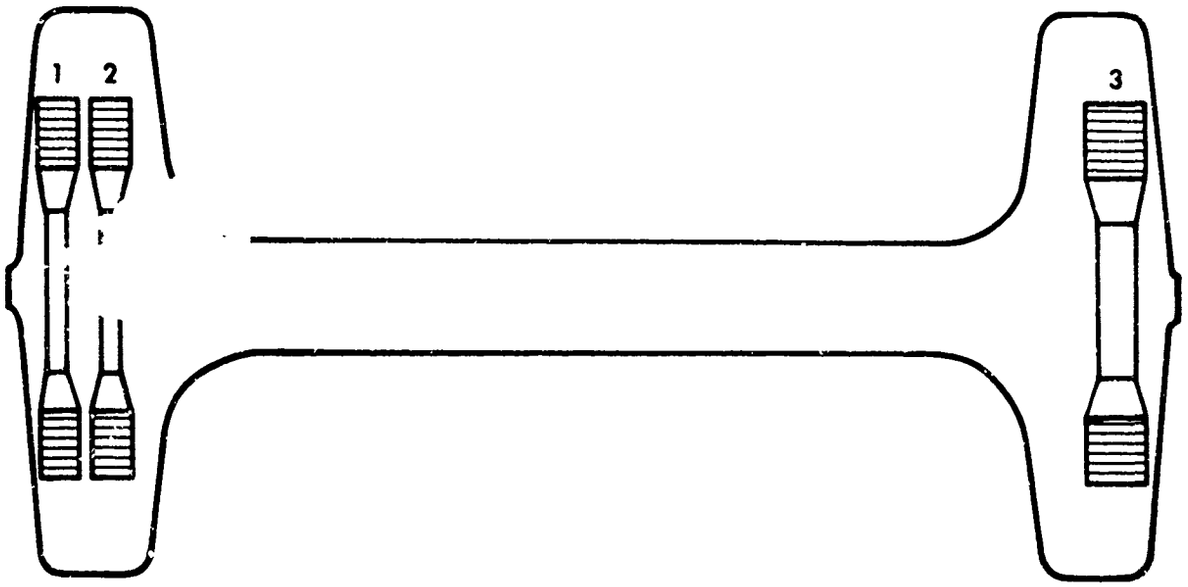


SCALE-1X

1 - ⅛ INCH DIAMETER CLOSE AS POSSIBLE TO FORGED SURFACE

2 - ⅛ INCH DIAMETER FROM SECOND ROW

3 - ¼ INCH DIAMETER CLOSE AS POSSIBLE TO FORGED SURFACE

SPECIMENS FROM DIE NUMBER 8457 WERE TAKEN IN A SIMILAR MANNER

Fig. 14 SKETCH OF A CROSS-SECTION THROUGH DIE NUMBER 9078 SHOWING LOCATIONS AT WHICH THE SCC SPECIMENS WERE TAKEN

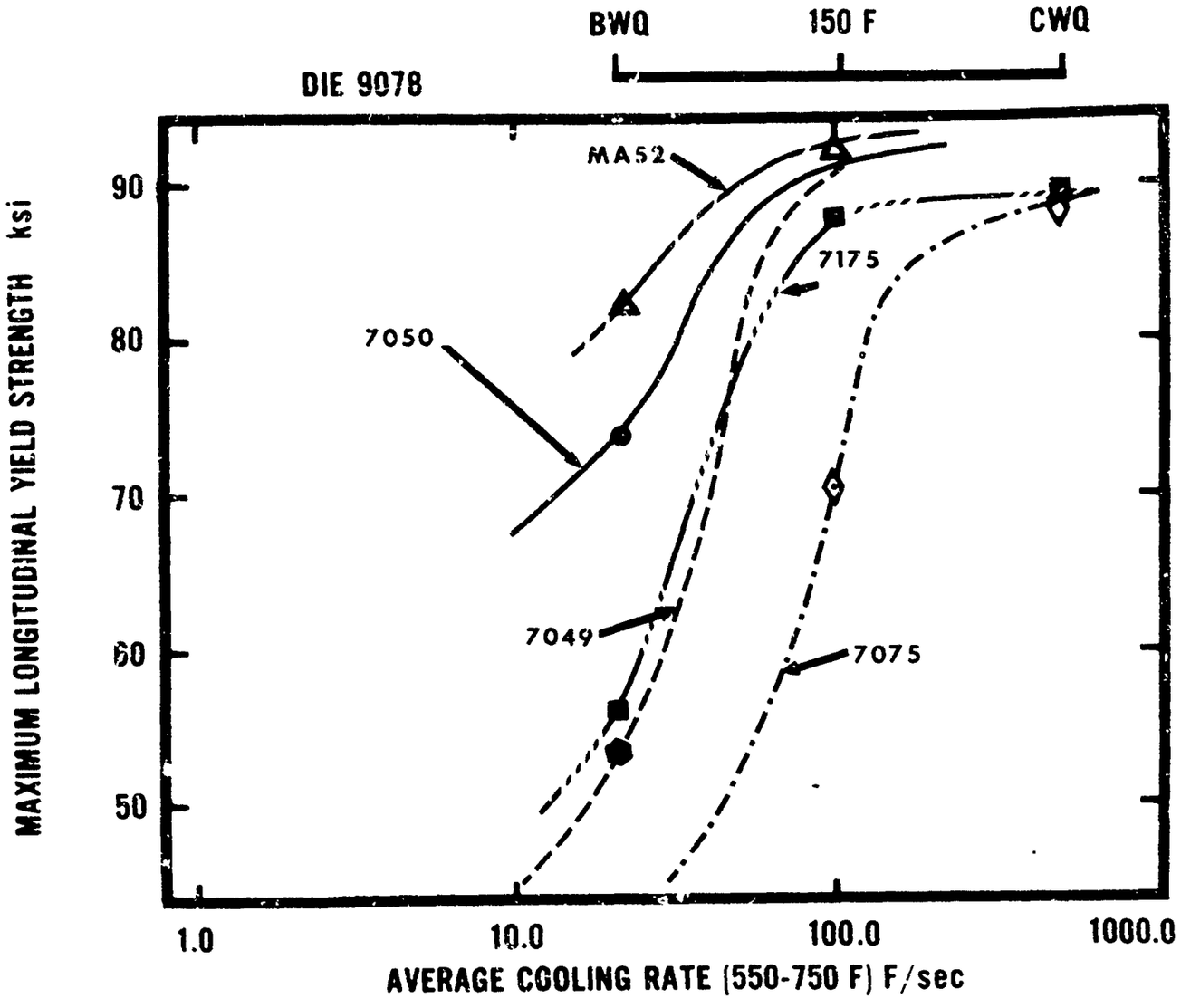


Fig. 15 QUENCH SENSITIVITY CURVES

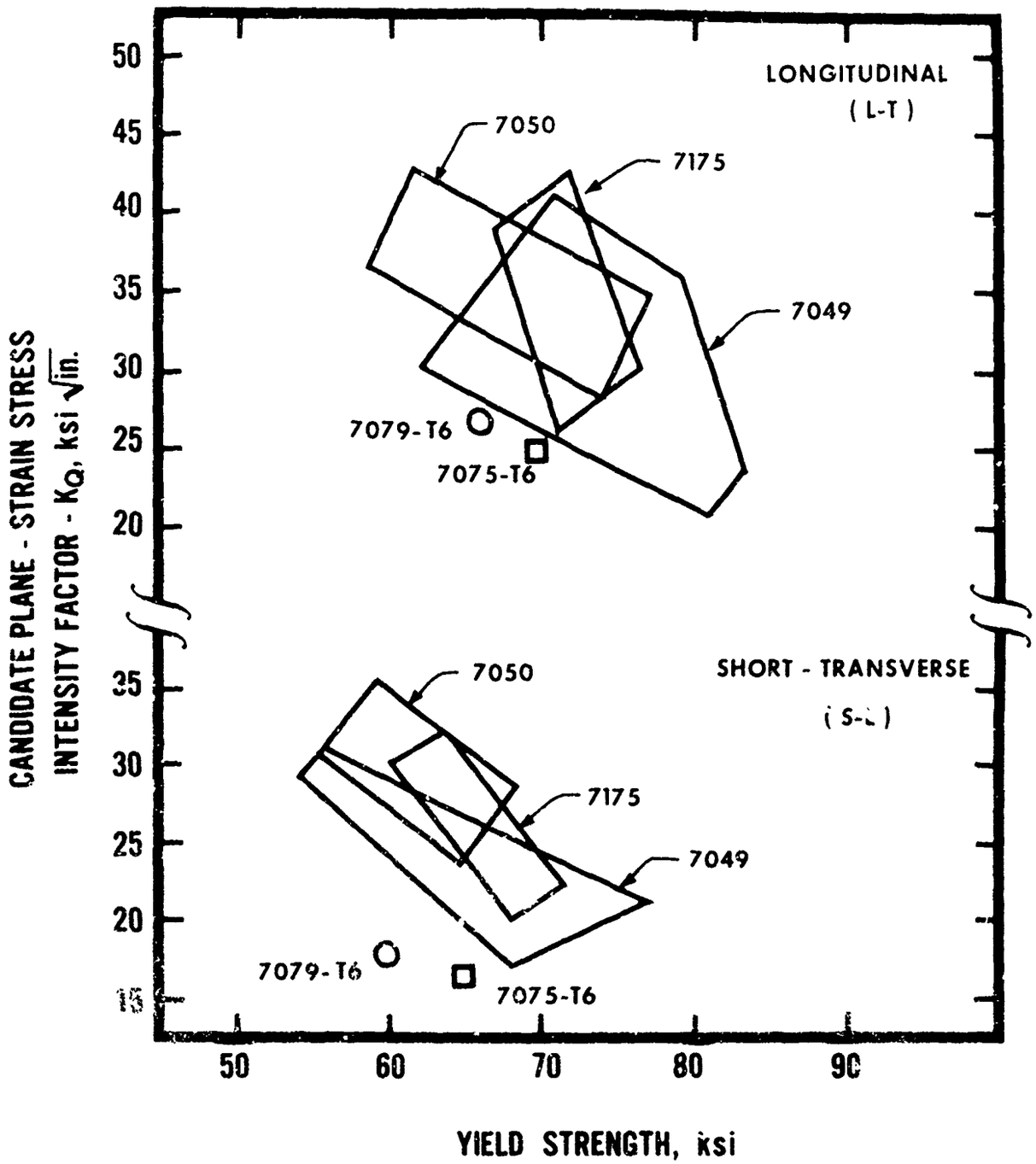


Fig. 16 FRACTURE TOUGHNESS OF DIE FORGINGS

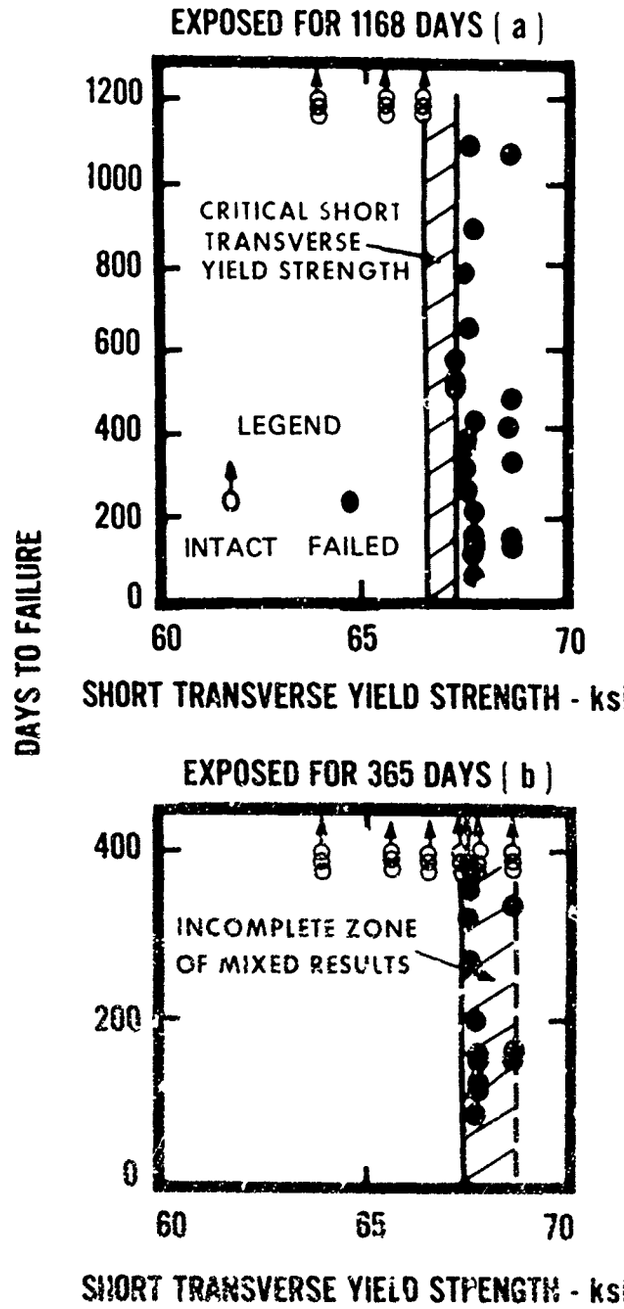


Fig. 17 DAYS TO FAILURE vs SHORT TRANSVERSE YIELD STRENGTH FOR 7175-T736 DIE FORGINGS EXPOSED TO NEW KENSINGTON ATMOSPHERE AT A STRESS OF 35 ksi

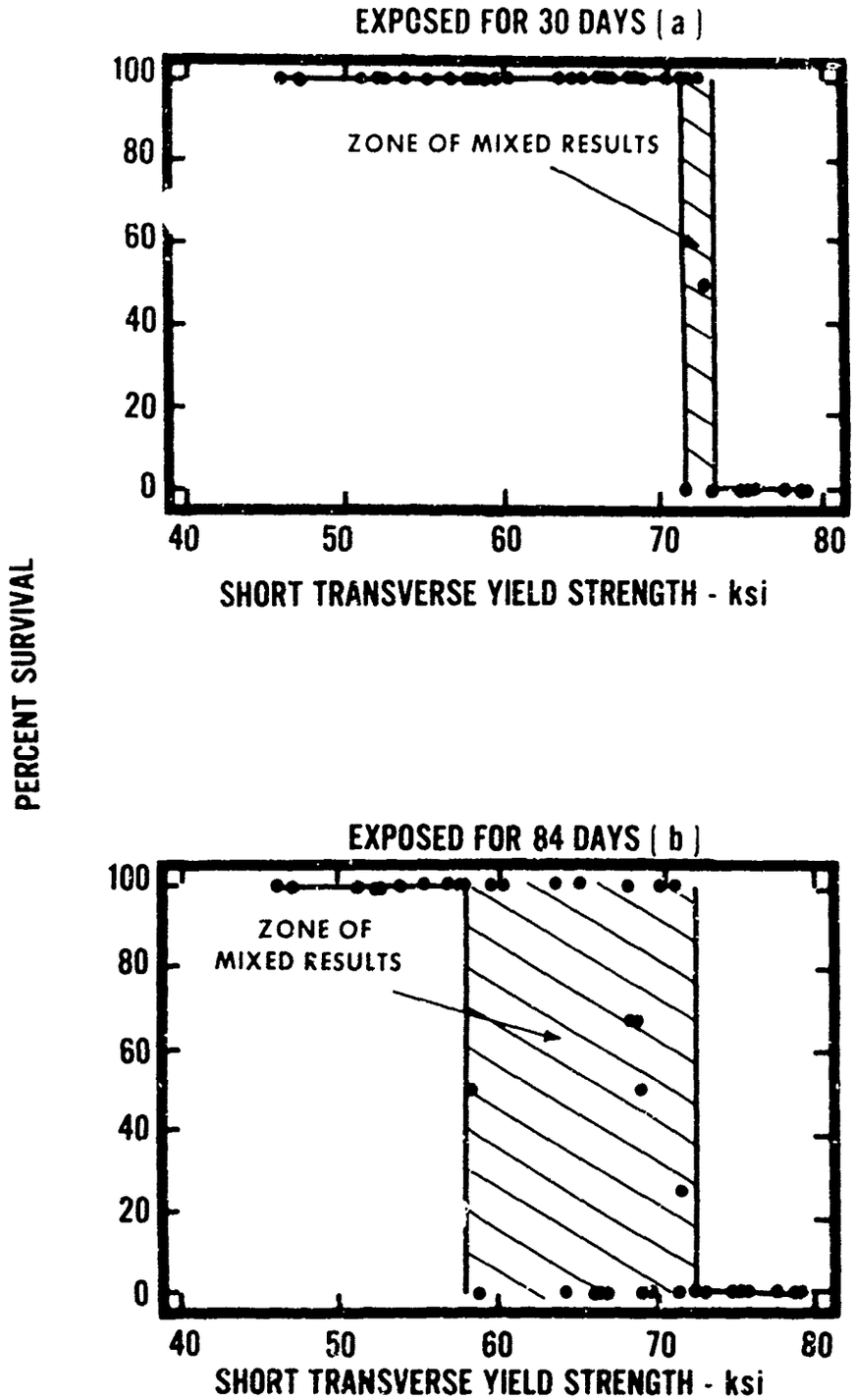


Fig. 18 PERCENT SURVIVAL vs SHORT TRANSVERSE YIELD STRENGTH FOR 7049-T7X DIE FORGINGS EXPOSED TO A.I. AT A STRESS OF 25 ksi

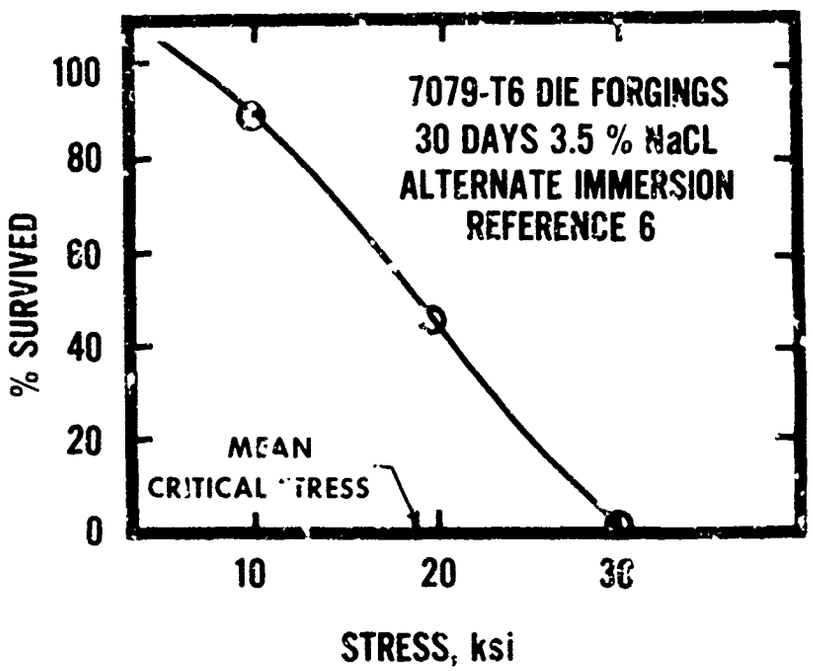


Fig. 19 GRAPHICAL MEANS OF DETERMINING MEAN CRITICAL STRESS

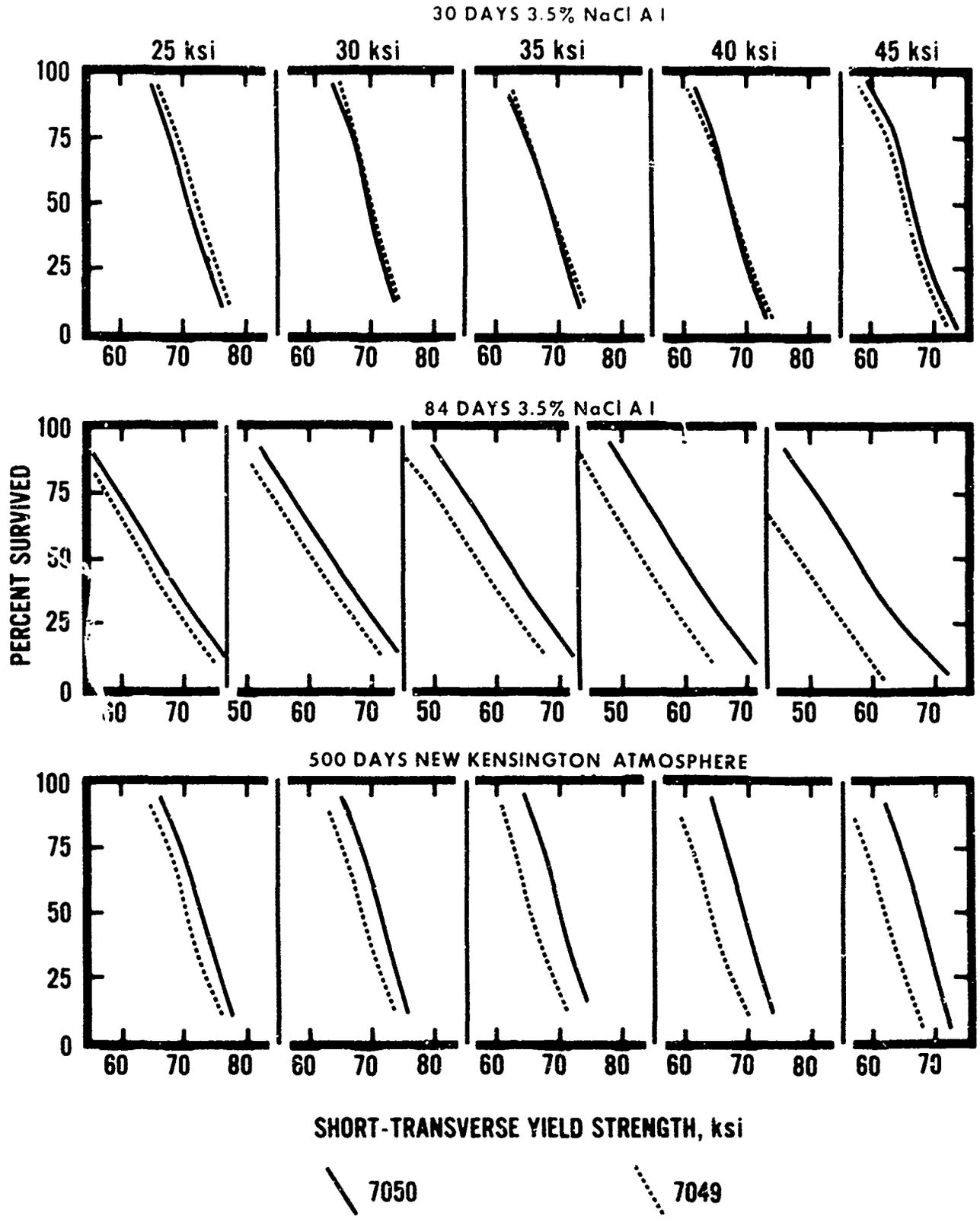


Fig. 20 PERCENT SURVIVED vs YIELD STRENGTH, WEB-FLANGE DIE FORGINGS

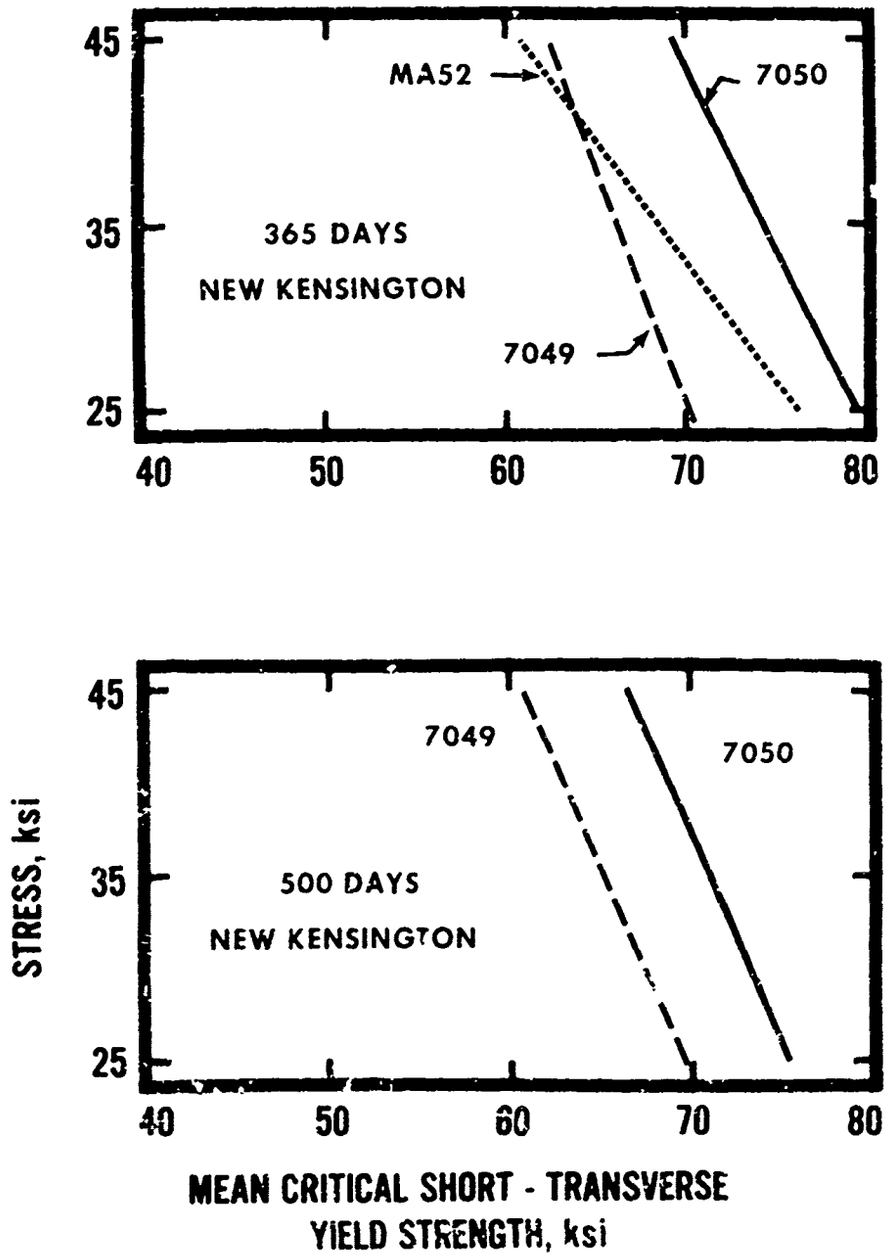


Fig. 21 STRESS vs CRITICAL STRENGTH
WEB-FLANGE FORGINGS

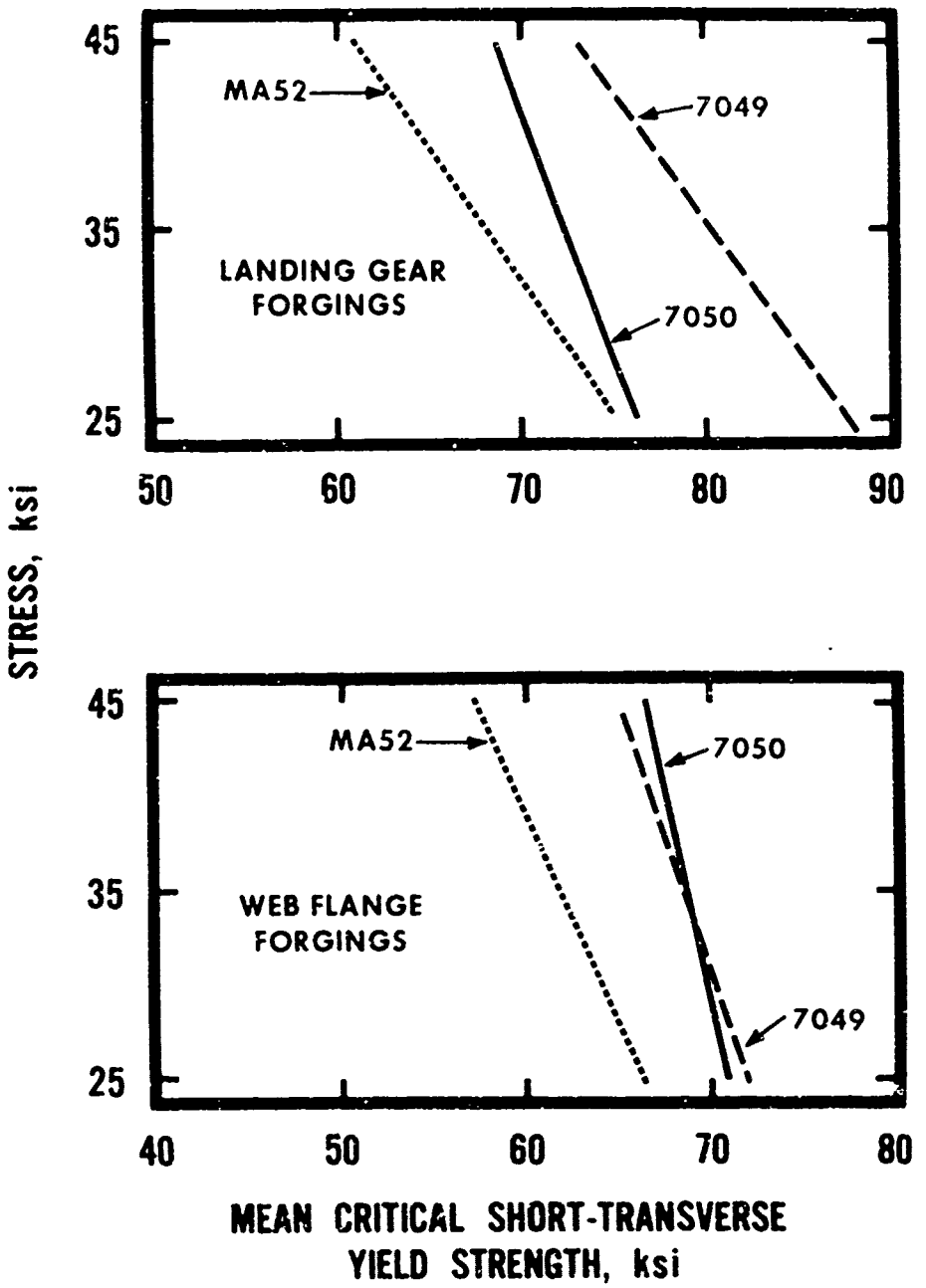


Fig. 22 STRESS vs CRITICAL STRENGTH
30 DAYS 3.5% NaCl A.I.

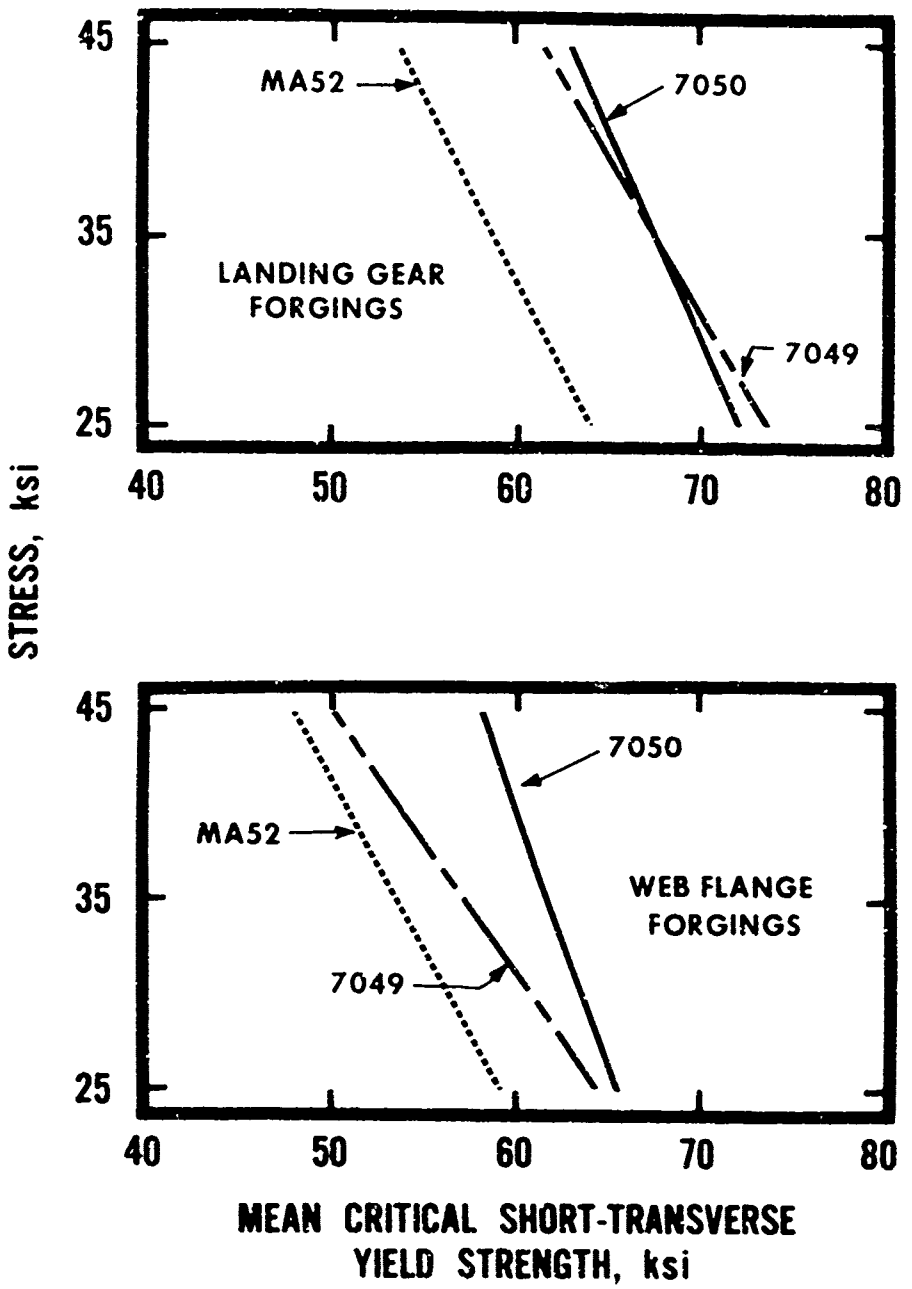


Fig. 23 STRESS vs CRITICAL STRENGTH
84 DAYS 3.5% NaCl A.I.

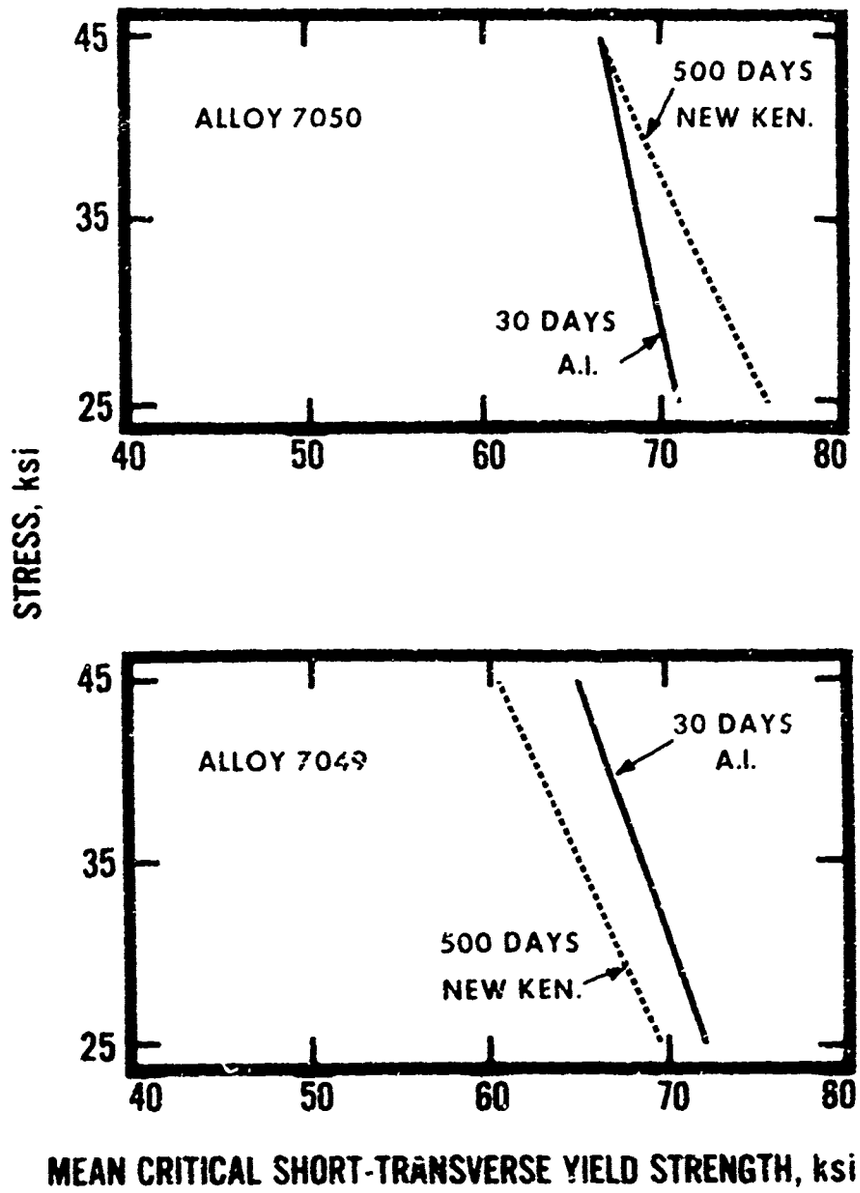


Fig. 24 STRESS vs CRITICAL STRENGTH WEB-FLANGE DIE FORGINGS

DIE FORGINGS WITH PRONOUNCED GRAIN DIRECTIONALITY

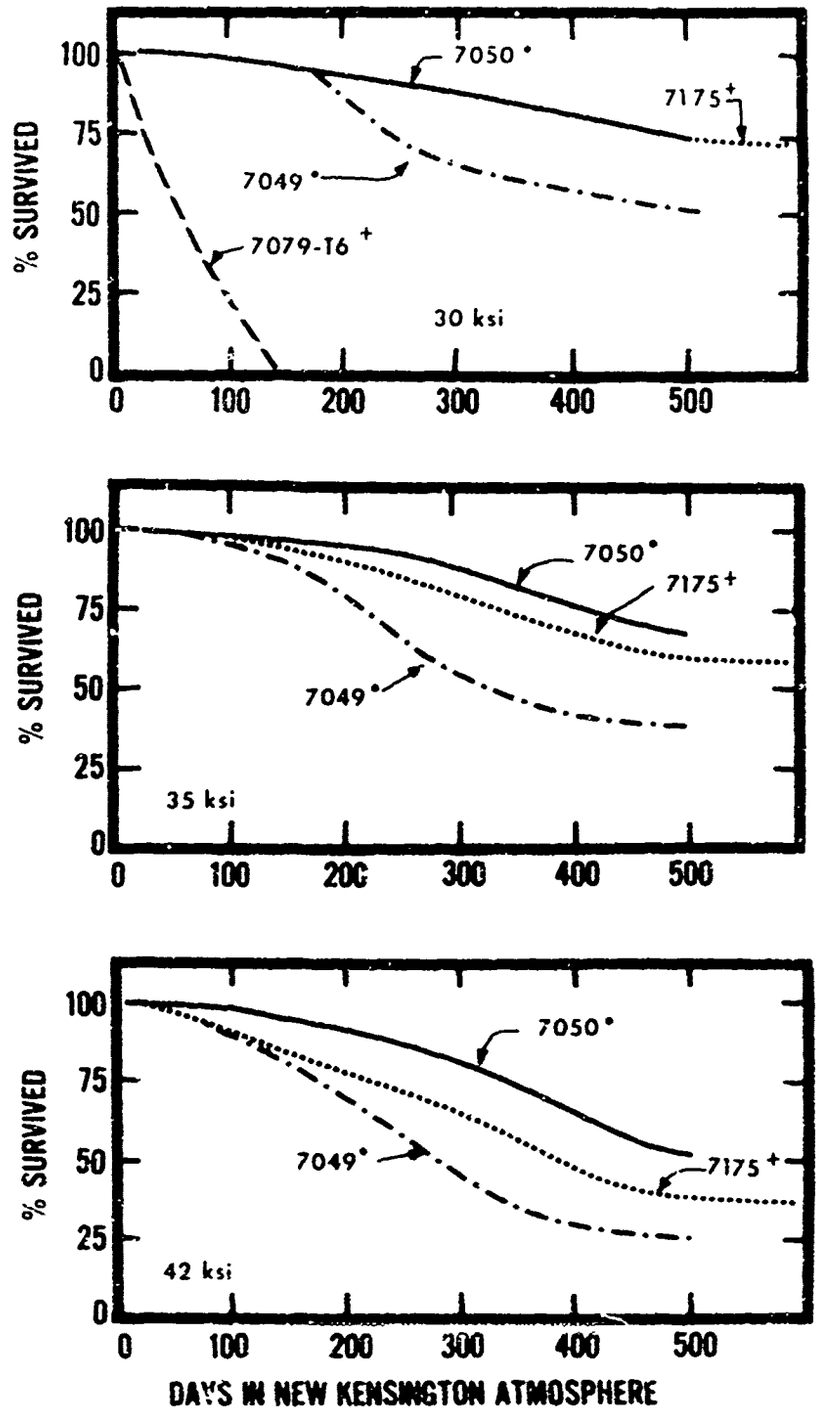


+ MEASURED

* CALCULATED ASSUMING YIELD STRENGTH OF 7175
(MEAN S-T YS = 66.5 ksi STANDARD DEVIATION = 3 ksi)

Fig. 25 % SURVIVED VS TIME IN INDUSTRIAL ATMOSPHERE

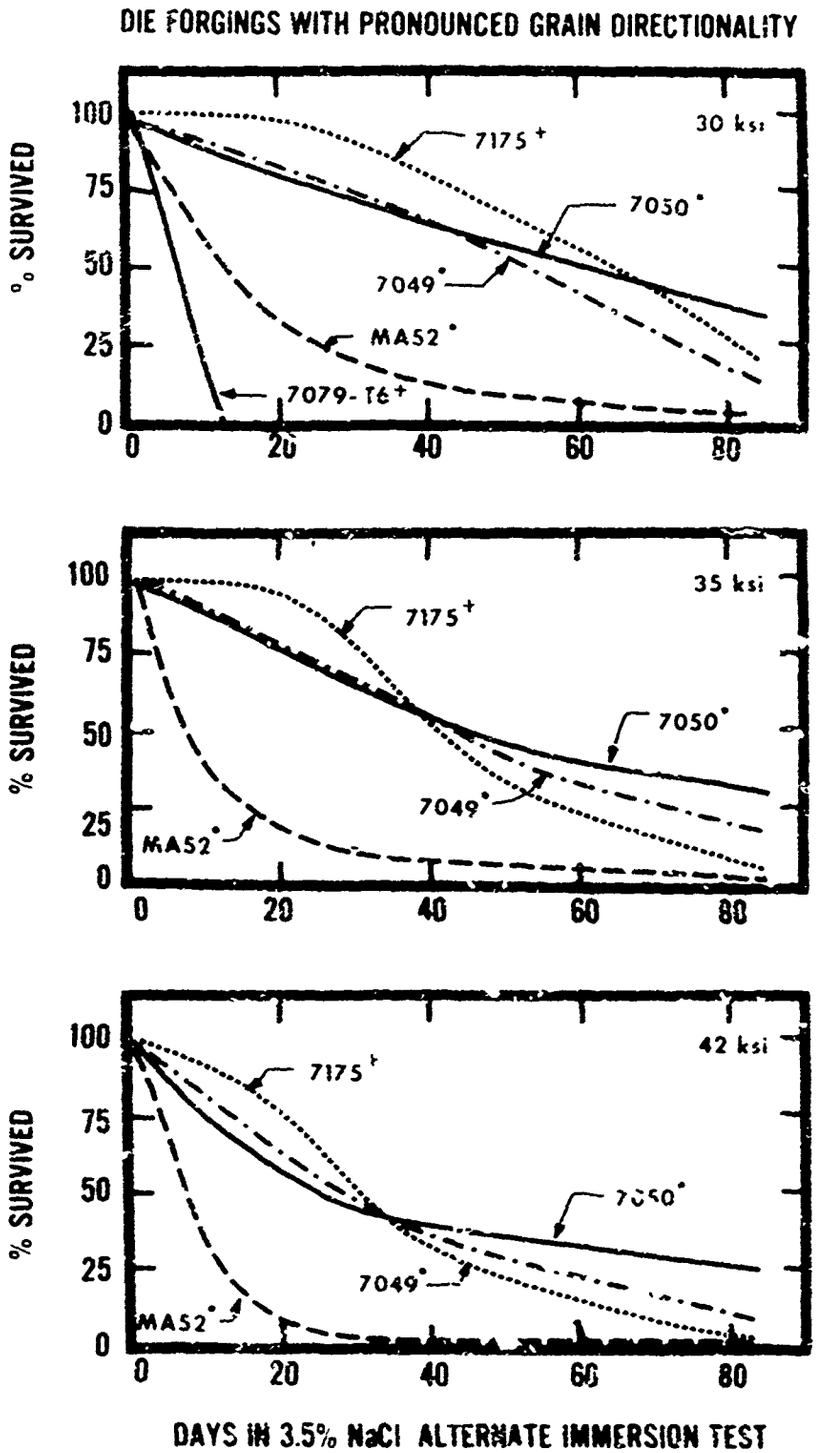


*MEASURED

+ CALCULATED ASSUMING YIELD STRENGTH OF 7175 (MEAN S-T YS - 66.5 ksi STANDARD DEVIATION = 3 ksi)

Fig. 26 % SURVIVED vs TIME IN ALTERNATE IMMERSION TEST

# SECTION IX

# APPENDIX I

## Properties and Heat Treating Conditions of Die Forgings not Produced for this Contract

APPENDIX I

Table XXXIII

MECHANICAL PROPERTIES OF 7050-T7X IN DIE NO. 9619

| Longitudinal Grain Flow | | | | | | Short-Transverse Grain Flow | | | | | |
|---|---|---|---|---|---|---|---|---|---|---|---|
| Tensile Properties | | | | Fracture Toughness | | Tensile Properties | | | | Fracture Toughness | |
| Spec. | T.S. ksi | Y.S. ksi | % El in 4D | Spec. | $K_{Ic}$ ksi $\sqrt{in.}$ | Spec. | T.S. ksi | Y.S. ksi | % El in 4D | Spec. | $K_{Ic}$ ksi $\sqrt{in.}$ |
| 7050-T7X - S-404795 | | | | | | | | | | | |
| 1 | 74.8 | 66.2 | 15.0 | TL-1 | 34.6 | 4 | 73.9 | 66.0 | 12.5 | SL-1 | 26.9 |
| 2 | 75.4 | 66.3 | 16.0 | | | 5 | 73.0 | 64.2 | 9.4 | | |
| 3 | 75.2 | 67.4 | 13.0 | | | 6 | 74.4 | 64.6 | 7.8 | | |
| | | | | | | 7 | 74.6 | 65.7 | 9.4 | | |
| | | | | | | 8 | 74.0 | 65.7 | 11.0 | | |
| | | | | | | 9 | 74.4 | 65.3 | 10.9 | | |
| 7050-T7X - S-404794 | | | | | | | | | | | |
| 1 | 70.5 | 60.6 | 16.0 | TL-1 | 35.6 | 4 | 70.8 | 59.5 | 7.8 | SL-1 | 31.7 |
| 2 | 73.2 | 62.4 | 16.0 | | | 5 | 68.7 | 57.5 | 10.9 | | |
| 3 | 72.7 | 63.7 | 16.0 | | | 6 | 70.1 | 59.7 | 10.9 | | |
| | | | | | | 7 | 71.6 | 61.9 | 7.8 | | |
| | | | | | | 8 | 72.6 | 60.8 | 12.0 | | |
| | | | | | | 9 | 71.3 | 61.2 | 7.8 | | |

Forgings heat treated 5.5 hr @ 880 F, quenched in water @ 150 F and artificially aged 24 hr/250 F + 12 hr/350 F.

APPENDIX I

**Table XXXIV**

TENSILE PROPERTIES OF PLANT AGED 7050 DIE FORGING NO. 15789

| | S-No 394706 4/250+4/350[1] | | | S-No 394708 4/250+7/350[1] | | | S-No 394709 SR 4/250+4/350[1] | | | S-No 39471[illegible] SR 4/250+7/350[1] | | |
|---|---|---|---|---|---|---|---|---|---|---|---|---|
| Srec. | T.S. ksi | Y.S. ksi | % El | T.S. ksi | Y.S ksi | % El | T.S. ksi | Y.S. ksi | % El | T.S. ksi | Y.S. ksi | %El |
| WL1 | 88.4 | 83.5 | 13.0 | 84.9 | 78.7 | 13.0 | 94.5 | 89.1 | 11.0 | 86.2 | 78.9 | 14.0 |
| WL2 | 88.5 | 83.8 | 12.0 | 84.1 | 77.9 | 14.0 | 94.5 | 88.8 | 10.0 | 86.1 | 79.2 | 13.0 |
| WL3 | 86.1 | 80.7 | 8.5 | 81.4 | 74.3 | 10.3 | 89.4 | 85.1 | 6.0 | 84.3 | 78.2 | 11.5 |
| WL4 | 89.4 | 84.4 | 12.0 | 80.4 | 73.9 | 9.5 | 93.3 | 89.2 | 11.0 | 86.5 | 80.8 | 12.0 |
| RL | 81.6 | 74.6 | 10.0 | 78.4 | 71.8 | 9.5 | 86.0 | 80.7 | 7.0 | 81.9 | 75.4 | 9.0 |
| P | - | - | - | 81.5 | 75.6 | 13.0 | - | - | - | 82.1 | 75.1 | 13.5 |
| FL1 | 84.4 | 79.2 | 12.0 | 79.9 | 73.8 | 15.1 | 88.0 | 83.3 | 11.0 | 82.3 | 76.2 | 12.5 |
| FL2 | 83.2 | 77.9 | 11.5 | 78.7 | 71.3 | 13.5 | 88.9 | 83.5 | 10.5 | 80.6 | 73.4 | 13.5 |
| FL3 | 85.2 | 79.6 | 11.0 | 78.6 | 71.8 | 13.5 | 89.7 | 83.0 | 9.0 | 82.5 | 74.6 | 11.5 |
| FL5 | 83.6 | 77.8 | 12.0 | 78.5 | 71.3 | 13.5 | 89.0 | 83.4 | 11.0 | 83.0 | 75.8 | 12.0 |
| FL6 | 81.7 | 76.4 | 9.5 | 79.3 | 72.6 | 11.5 | 84.0 | 77.8 | 9.5 | 80.1 | 72.6 | 9.0 |
| FL7 | 81.8 | 74.7 | 12.0 | 75.9 | 66.2 | 14.0 | 85.9 | 80.1 | 12.0 | 80.9 | 73.4 | 14.0 |
| FL8 | 82.1 | 74.8 | 14.5 | 77.4 | 69.2 | 13.5 | 81.8 | 72.8 | 15.5 | 76.7 | 66.0 | 14.0 |
| WLT1 | 86.3 | 80.8 | 12.0 | 81.5 | 74.3 | 14.0 | 90.7 | 84.7 | 6.0 | 82.8 | 72.1 | 12.0 |
| WLT2 | 86.0 | 81.1 | 11.0 | 81.3 | 74.4 | 14.0 | 90.4 | 85.0 | 10.0 | 82.6 | 78.6 | 13.0 |
| WLT3 | 86.3 | 80.8 | 14.0 | 80.9 | 73.9 | 14.0 | 90.6 | 85.4 | 11.0 | 83.6 | 79.2 | 13.0 |
| WLT4 | 83.5 | 78.5 | 6.5 | 83.4 | 76.7 | 13.0 | 84.7 | 77.6 | 5.5 | 80.5 | 72.3 | 9.0 |
| ST1 | 76.8 | 70.8 | 5.5 | 72.8 | 65.2 | 7.0 | 78.9 | 68.3 | 3.0 | 74.9 | 65.2 | 3.0 |
| ST2 | 78.1 | 71.8 | 5.0 | 74.0 | 66.0 | 7.0 | 79.9 | 71.1 | 4.5 | 76.0 | 66.0 | 4.5 |
| FST1 | 78.7 | 71.6 | 6.0 | 74.7 | 65.7 | 8.0 | 79.4 | 68.2 | 4.0 | 75.3 | 65.4 | 4.0 |

Note 1. Hr @ temp °F.

WL = Web longitudinal
RL = Rib longitudinal
P = Prolongation
FL = Flange longitudinal
WLT = Web long transverse
ST = Short-transverse in bulk section
FST = Flange short-transverse
SR = Stressed relieved by compression

**Forgings heat treated 16 hr @ 890 F and cold-water quenced. S-394709 and 39471 cold worked 2.5-3.5% after quenching. All forgings artificially aged as indicated.**

APPENDIX I

Table XXXV

TENSILE PROPERTIES AND ELECTRICAL CONDUCTIVITIES OF ARL AGED 7050 DIE FORGING NO. 15789

| | 15789 S-No. 374707 10 hr total aging @ 350 F | | | 15789, Stress Relieved S-No. 394710 12 hr total aging @ 350 F | | |
|---|---|---|---|---|---|---|
| Direction | T.S. psi | Y.S. psi | % El in 4D | T.S. psi | Y.S. psi | % El in 4D |
| WL1 | 78.6 | 70.9 | 12.0 | 80.4 | 72.8 | 14.0 |
| WLT1 | 73.3 | 70.0 | 12.5 | 76.7 | 67.8 | 11.0 |
| WLT2 | 79.5 | 71.8 | 9.5 | 80.1 | 72.6 | 12.0 |
| FL1 | 77.4 | 69.3 | 14.0 | 78.1 | 69.0 | 13.0 |
| FL3 | 76.5 | 70.6 | 12.5 | 78.0 | 69.8 | 15.0 |
| FL2 | 75.4 | 66.7 | 13.5 | 75.8 | 66.0 | 12.5 |
| FL5 | 76.5 | 68.5 | 12.5 | 76.7 | 67.8 | 12.0 |
| FL6 | 77.2 | 69.0 | 13.5 | 78.5 | 69.9 | 13.0 |
| RL1 | 78.4 | 70.3 | 11.0 | 77.8 | 68.3 | 11.0 |
| P | 78.8 | 72.3 | 15.0 | 74.7 | 63.7 | 14.5 |
| ST1 | 71.9 | 63.4 | 7.0 | 71.7 | 59.9 | 5.5 |
| ST2 | 73.4 | 64.1 | 7.5 | 73.6 | 61.6 | 6.0 |
| FST1 | 71.8 | 63.1 | 5.0 | 70.2 | 57.8 | 4.0 |
| FST2 | 76.6 | 68.6 | 8.0 | 73.9 | 60.2 | 6.0 |
| FST3 | 76.2 | 67.9 | 8.0 | 74.8 | 61.2 | 6.0 |

Electrical Conductivity of both = 41.0% IACS

WL = Web longitudinal
WLT = Web long-transverse
FL = Flange longitudinal
RL = Rib longitudinal
P = Prolongation
ST = Short-transverse in bulky section
FST = Flange short-transverse

**Forgings heat treated 16 hr @ 890 F, cold-water quenched and artificially aged 4 hr/250 F + indicated time @ 350 F.**

S-394710 cold worked 2.5-3.5% after quenching.

APPENDIX I

Table XXXVI

TENSILE PROPERTIES AND ELECTRICAL CONDUCTIVITY OF PLANT AGED 7050 DIE FORGINGS 8457

| | Special Fabricating Process | | | | | | Standard Process | | |
|---|---|---|---|---|---|---|---|---|---|
| | S. No. 395191 4/250+7/350[1] | | | S. No. 395190 4/250+9/350[1] | | | S. No. 405253 24/250+12/350[1] | | |
| | T.S. ksi | Y.S. ksi | % El in 4D | T.S. ksi | Y.S. ksi | % El in 4D | T.S. ksi | Y.S. ksi | % El in 4D |
| Longitudinal Web | | | | | | | | | |
| 2-2-1/2" section | 80.7 | 73.7 | 14.0 | 81.5 | 74.2 | 14.5 | 69.9 | 61.7 | 14.5 |
| 4-4-1/2" section | 79.7 | 72.7 | 13.0 | 78.7 | 71.2 | 14.0 | 70.8 | 61.6 | 14.0 |
| 6-6-1/2" section | 79.0 | 71.9 | 11.5 | 77.9 | 70.2 | 12.0 | 71.2 | 62.4 | 13.3 |
| Short Transverse | | | | | | | | | |
| 2-2-1/2" section | 76.5 | 71.0 | 7.8 | 77.8 | 71.4 | 7.0 | | | |
| 4-4-1/2" section | 74.9 | 66.5 | 5.5 | 74.8 | 67.2 | 4.5 | 69.6 | 64.2 | 5.0 |
| 6-6-1/2" section | 73.4 | 65.7 | 4.5 | 72.8 | 65.0 | 4.0 | | | |
| Electrical Conductivity (% IACS) | | | | | 40.4 | | | | |

Note: 1. Hr @ temp °F.

Special Fabricating Process forgings heat treated 16 hr @ 890 F, cold-water quenched and artificially aged as indicated.

Standard Process forging heat treated 16 hr @ 890 F, quenched in water @ 140 F and artificially aged as indicated.

Table XXXVII

TENSILE PROPERTIES OF 7050 DIE FORGINGS NO. 8457
AGED AT ARL

| S. No. | Total Hr Aging @ 350 F | Section Thickness | Direction† | Tensile Properties T.S. ksi | Y.S. ksi | % El in 4D |
|---|---|---|---|---|---|---|
| 398724-7 | 7 | 4-4-1/2" | WL | 81.2 | 74.0 | 13.0 |
| | | | WL | 81.1 | 73.8 | 13.0 |
| | | | FST | 78.9 | 72.1 | 2.0 |
| | | | FST | 78.6 | 72.0 | 2.0 |
| 395191 | 15 | 2-2-1/2" | WL | 72.7 | 63.2 | 15.0 |
| | | | WL | 73.4 | 63.9 | 15.0 |
| | | | WL | 75.2 | 66.2 | 15.0 |
| | | | WL | 74.8 | 65.8 | 15.0 |
| | | 6-6-1/2" | WL | 74.6 | 65.8 | 13.0 |
| | | | WL | 74.3 | 65.2 | 13.0 |
| | | | WL | 74.3 | 65.5 | 13.0 |
| | | | WL | 74.0 | 65.0 | 14.0 |
| | | | FST | 74.0 | 65.2 | 8.0 |
| | | | FST | 72.8 | 65.3 | 4.0 |
| 398724-23 | 23 | 2-2-1/2" | WL | 71.8 | 61.6 | 15.0 |
| | | | WL | 71.6 | 60.8 | 15.0 |
| | | | WL | 72.4 | 62.4 | 16.0 |
| | | | WL | 70.3 | 60.3 | 14.0 |
| | | 6-6-1/2" | WL | 69.9 | 59.3 | 13.0 |
| | | | WL | 70.3 | 60.6 | 14.0 |
| | | | WL | 70.0 | 60.9 | 11.0 |
| | | | WL | 70.1 | 60.6 | 14.0 |
| | | | FST | 69.3 | 57.3 | 6.0 |
| | | | FST | 71.0 | 59.3 | 10.0 |

Forgings heat treated 16 hr @ 890 F, cold-water quenched and artificially aged 4 hr/250 F + indicated 2nd-step @ 350 F.

†WL = web longitudinal, FST = flat [illegible]

APPENDIX I

Table XXXVIII

TENSILE PROPERTIES AND ELECTRICAL CONDUCTIVITIES OF 7050 FORGINGS DIE NO. 10853

| S. No. | Stress Relieved | Age[1] | Electrical Conductivity % IACS | Test Dir. | Tensile Properties T.S. ksi | Y.S. ksi | % El in 4D |
|---|---|---|---|---|---|---|---|
| 396350 | No | 24/250 + 4/335 | 36.0 | Tang. | 82.1 | 77.4 | 3.0 |
| | No | 24/250 + 4/335 | | Axial | 82.9 | 82.2 | 5.7 |
| 396351 | Yes | 24/250 + 4/335 | 36.7 | Tang. | 78.1 | 72.7 | 3.6 |
| | Yes | 24/250 + 4/335 | | Axial | 77.8 | 72.7 | 6.3 |
| 396352 | No | 24/250 + 6/350 | 40.3 | Tang. | 80.6 | 74.9 | 3.5 |
| | No | 24/250 + 6/350 | | Axial | 82.1 | 73.9 | 5.4 |
| 396353 | Yes | 24/250 + 6/350 | 40.6 | Tang. | 77.3 | 70.5 | 4.1 |
| | Yes | 24/250 + 6/350 | | Axial | 78.7 | 69.3 | 6.7 |

Note: 1. Hr @ temp °F.

Forgings heat treated 6 hr @ 890 F, cold-water quenched and artificially aged as indicated. S-396351 and 396353 cold worked 2% after quenching.

APPENDIX I

Table XXXIX

TENSILE PROPERTIES OF 7050
DIE FORGING NO. 15093

| Test Location | T.S. ksi | Y.S. ksi | % El in 4D | % R of A |
|---|---|---|---|---|
| 1 | 76.3 | 68.2 | 14.3 | 30 |
| 2 | 78.3 | 70.6 | 15.0 | 41 |
| 3 | 79.0 | 71.2 | 15.5 | 40 |
| 4 | 77.7 | 69.3 | 14.3 | 36 |
| 5 | 75.0 | 66.0 | 14.0 | 12 |
| 6 | 76.7 | 67.6 | 13.0 | 19 |
| 7 | 75.9 | 67.6 | 15.0 | 36 |
| 8 | 76.4 | 67.8 | 14.3 | 36 |
| 9 | 76.8 | 68.0 | 17.1 | 43 |
| 10 | 77.2 | 68.9 | 13.6 | 32 |
| 11 | 75.8 | 66.6 | 9.0 | 9 |
| 12 | 76.2 | 66.6 | 9.0 | 12 |
| 13 | 74.0 | 66.7 | 10.7 | 26 |
| 14 | 75.8 | 66.0 | 13.0 | 24 |
| 15 | 76.8 | 67.5 | 12.0 | 20 |
| 16 | 77.9 | 69.7 | 14.3 | 35 |
| 17 | 77.1 | 69.0 | 15.0 | 40 |
| 18 | 76.3 | 68.7 | 14.3 | 34 |
| 19 | 76.8 | 67.9 | 12.0 | 29 |
| 20 | 75.6 | 67.2 | 6.0 | 6 |
| 21 | 71.2 | 66.7 | 3.0 | 5 |
| 22 | 72.8 | 66.5 | 4.0 | 4 |
| 23 | 76.0 | 66.9 | 9.0 | 14 |
| 24 | 76.5 | 68.7 | 7.1 | 8 |
| 25 | 77.2 | 69.3 | 6.4 | 7 |
| 26 | 77.1 | 70.0 | 5.0 | 8 |

Forging heat treated 8-3/4 hr @ 880 F, quenched in water @ 150 F and artificially aged 24 hr/250 F + 12 hr/350 F.

See Figure 10, Appendix I, for test bar location.

APPENDIX I

Table XL

TENSILE PROPERTIES OF PLANT AGED 7050 DIE FORGINGS 9078

Special Fabricating Process

| | S.No. 395205 4/250+7/350[1] | | | S.No. 395202 4/250+9/350[1] | | |
|---|---|---|---|---|---|---|
| Specimen | T.S. ksi | Y.S. ksi | % El | T.S. ksi | Y.S. ksi | % El |
| WL1 | 83.0 | 77.4 | 16.0 | 83.7 | 77.8 | 15.0 |
| WLT1 | 80.2 | 73.7 | 16.0 | 81.9 | 76.6 | 18.0 |
| RL1 | 78.7 | 71.8 | 14.0 | 79.5 | 72.1 | 15.0 |
| FL1 | 82.5 | 76.3 | 16.0 | 79.9 | 73.0 | 15.0 |
| FL2 | 83.1 | 77.5 | 16.0 | 81.8 | 75.7 | 15.0 |
| FL3 | 83.3 | 77.8 | 15.0 | 82.7 | 76.6 | 15.0 |
| FL4 | 75.6 | 67.7 | 10.0 | 75.3 | 66.7 | 12.0 |
| FST1 | 75.5 | 69.2 | 10.0 | 76.0 | 68.2 | 8.0 |
| FST2 | 77.3 | 71.5 | 7.0 | 80.0 | 73.7 | 8.0 |

WL = Web longitudinal
WLT = Web long transverse
RL = Rib longitudinal
FL = Flange longitudinal
FST = Flange short-transverse

Forgings heat treated 16 hr @ 890 F, cold-water quenched and artificially aged as indicated.

Note: 1. Hr @ temp °F.

APPENDIX I

Table XLI

TENSILE PROPERTIES OF ARL AGED 7050 DIE FORGING 9078

Special Fabricating Process

| S. No. | Age[1] | Direction | Electrical Conductivity | T.S. ksi | Y.S. ksi | El % in 4D |
|---|---|---|---|---|---|---|
| 398887 | 10 | WL | 41.2 | 82.0 | 75.8 | 16.0 |
| | | FST | 41.2 | 76.1 | 67.6 | 8.0 |
| | | FST | 41.2 | 74.4 | 65.4 | 10.0 |
| 398888 | 15 | WL | 42.1 | 79.2 | 71.8 | 16.0 |
| | | FST | 42.2 | 72.7 | 65.1 | 6.0 |
| | | FST | 42.2 | 74.7 | 65.4 | 6.0 |
| 398889 | 23 | WL | 42.6 | 76.4 | 68.4 | 16.0 |
| | | FST | 42.8 | 70.7 | 59.8 | 10.0 |
| | | FST | 42.8 | 72.2 | 62.5 | 8.0 |

Note: 1. Hr @ 350 F.

Forgings heat treated 16 hr @ 890 F, cold-water quenched and artificially aged 4 hr/250 F + indicated 2nd-step agings @ 350 F

APPENDIX

Table XLII

TENSILE PROPERTIES OF A PLATE AGED 7050 FORGING
Alcoa Die No. 15789

Standard Process

| S. No. | T.S. ksi | Y.S. ksi | El. % | T.S. ksi | Y.S. ksi | El. % | T.S. ksi | Y.S. ksi | El. % |
|---|---|---|---|---|---|---|---|---|---|
| 412461 | 71.3 | 63.8 | 16.9 | 71.1 | 61.3 | 11.5 | 70.9 | 57.5 | 15.0 |

Aged 24 hr @ 250 F + 12 hr @ 350 F.

Forging heat treated 16 hr @ 890 F.

Quenched in 150 F water.

APPENDIX I

Table XLIII

MECHANICAL PROPERTY TESTS 7049-T7X DIE FORGINGS DIE NO. 9078

| | | | | | Flange | | | | | | Web | | | | | |
|---|---|---|---|---|---|---|---|---|---|---|---|---|---|---|---|---|
| | | | | | Tensile Properties | | | | Fracture Toughness | | Tensile Properties | | | | Fracture Toughness | |
| S-No | Quench | Aging[1] | Elec. Cond. % IACS | Test Dir. | Spec. No. | T.S. ksi | Y.S. ksi | El % in 4D | Spec. No. | $K_{Ic}$ ksi $\sqrt{in.}$ | Spec. No. | T.S. ksi | Y.S. ksi | El % in 4D | Spec. No. | $K_{Ic}$ ksi $\sqrt{in.}$ |
| 398775 | CWQ | 7/225+ 4/350 | 39.6 | L | L-1 | 82.3 | 76.3 | 13.0 | LT-1 | 32.7* | L-3 | 85.1 | 80.2 | 13.0 | LT-2 | 28.4 |
| | | | | | L-2 | 82.3 | 76.1 | 13.0 | | | | | | | | |
| | | | | | L-4 | 82.1 | 76.4 | 13.0 | | | | | | | | |
| | | | | T | T-1 | 81.8 | 76.2 | 14.0 | | | T-3 | 82.9 | 78.1 | 14.0 | TL-1 | 31.2 |
| | | | | | T-2 | 78.2 | 70.5 | 12.5 | | | | | | | | |
| | | | | N | N-1 | 75.6 | 67.9 | 13.0 | SL-1 | 20.4 | | | | | | |
| | | | | | N-2 | 78.0 | 71.7 | 8.0 | | | | | | | | |
| 398776 | CWQ | 7/225+ 8/350 | 41.3 | L | L-1 | 74.8 | 65.6 | 15.5 | LT-1 | 33.1* | L-3 | 80.4 | 73.8 | 14.5 | | |
| | | | | | L-2 | 76.1 | 67.4 | 14.5 | | | | | | | | |
| | | | | | L-4 | 76.3 | 68.5 | 14.0 | | | | | | | | |
| | | | | T | T-1 | 75.6 | 67.1 | 14.0 | | | T-3 | 78.1 | 71.5 | 15.0 | TL-1 | 29.4 |
| | | | | | T-2 | 76.5 | 67.1 | 15.0 | | | | | | | | |
| | | | | N | N-1 | 72.8 | 62.5 | 12.5 | SL-1 | 24.1 | | | | | | |
| | | | | | N-2 | 72.6 | 63.4 | 7.5 | | | | | | | | |
| 398777 | CWQ | 24/250 +14/320 | 38.1 | L | L-1 | 86.6 | -- | 12.0 | LT-1 | 27.4 | L-3 | 88.5 | 82.7 | 12.0 | LT-2 | 24.2 |
| | | | | | L-2 | 87.8 | 83.4 | 12.0 | | | | | | | | |
| | | | | | L-4 | 86.9 | 82.[illegible] | 12.0 | | | | | | | | |
| | | | | T | T-1 | 84.8 | 80.6 | 12.0 | | | T-3 | 87.2 | 83.4 | 12.0 | TL-1 | 22.3 |
| | | | | | T-2 | 88.8 | 84.4 | 10.0 | | | | | | | | |
| | | | | N | N-1 | 81.2 | 75.1 | 6.0 | SL-1 | 20.8 | | | | | | |
| | | | | | N-2 | 82.9 | 75.8 | 10.0 | | | | | | | | |
| 398778 | 140 F | 24/250+ 14/320 | 40.9 | L | L-2 | 82.1 | 75.9 | 10.0 | LT-1 | 26.7 | L-3 | 85.8 | 80.7 | 10.0 | LT-2 | 22.5 |
| | | | | | L-4 | 80.2 | 73.7 | 12.0 | | | | | | | | |
| | | | | | L-5 | 81.7 | 75.9 | 12.0 | | | | | | | | |
| | | | | T | T-1 | 83.6 | 78.1 | 11.0 | | | T-3 | 81.1 | 73.9 | 10.0 | TL-1 | 23.5 |
| | | | | | T-2 | 80.1 | 73.3 | 10.0 | | | | | | | | |
| | | | | N | N-1 | 75.5 | 68.5 | 7.0 | SL-1 | 17.9 | | | | | | |
| | | | | | N-3 | 77.6 | 70.8 | 6.0 | | | | | | | | |

APPENDIX I

Table XLIII (Continued)

MECHANICAL PROPERTY TESTS 7049-T7X DIE FORGINGS DIE NO. 9078

| | | | | | Flange | | | | | | Web | | | | | |
|---|---|---|---|---|---|---|---|---|---|---|---|---|---|---|---|---|
| | | | | | Tensile Properties | | | | Fracture Toughness | | Tensile Properties | | | | Fracture Toughness | |
| S-No | Quench | Aging[1] | Elec. Cond. % IACS | Test Dir. | Spec. No. | T.S. ksi | Y.S. ksi | El % in 4D | Spec. No. | $K_c$ ksi $\sqrt{in.}$ | Spec. No. | T.S. ksi | Y.S. ksi | El % in 4D | Spec. No. | $K_c$ ksi $\sqrt{in.}$ |
| 398779 | 140 F | 24/250+ 14/320 | 41.6 | L | L-2 | 82.8 | 75.5 | 11.0 | LT-1 | 28.8 | L-3 | 83.0 | 76.7 | 11.0 | LT-2 | 23.3 |
| | | | | | L-4 | 80.3 | 72.4 | 12.0 | | | | | | | | |
| | | | | | L-5 | 83.3 | 77.5 | 11.0 | | | | | | | | |
| | | | | T | T-1 | 86.4 | 81.3 | 12.0 | | | T-3 | 80.4 | 72.9 | 12.0 | TL-1 | 24.2 |
| | | | | | T-2 | 82.2 | 75.2 | 10.0 | | | | | | | | |
| | | | | N | N-1 | 75.1 | 66.5 | 8.0 | SL-1 | 18.8 | | | | | | |
| | | | | | N-3 | 77.3 | 70.8 | 8.0 | | | | | | | | |
| 405044-9 | 150 F | 24/250+ 10/350 | | L | | | | | | | | 84.0 | 77.3 | 12.0 | LT-1 | 37.0* |
| | | | | T | | | | | | | | 82.8 | 74.0 | 12.0 | TL-1 | 35.0* |
| | | | | N | | 70.8 | 63.8 | 8.0 | SL-1 | 27.2* | | | | | | |
| 405044-11 | 150 F | 24/250+ 30/350 | | L | | | | | | | | 74.0 | 63.9 | 14.0 | LT-1 | 34.5* |
| | | | | T | | | | | | | | 73.7 | 62.4 | 12.0 | TL-1 | 32.5* |
| | | | | N | | 65.1 | 55.6 | 8.0 | SL-1 | 29.4* | | | | | | |

* $K_Q$ not valid $K_{Ic}$

Note: 1. Hr @ temp °F.

Forgings heat treated 4 hr @ 875 F, quenched and artificially aged as indicated.

APPENDIX I

Table XLIV

TENSILE TESTS ON 7049-T7X DIE FORGINGS DIE NO. 9078

| Dash No. | Aging[1] | Longitudinal Web - Spec. L-6 T.S. ksi | Longitudinal Web - Spec. L-6 Y.S. ksi | Longitudinal Web - Spec. L-6 El % in 4D | Longitudinal Flange - Spec. L-4 T.S. ksi | Longitudinal Flange - Spec. L-4 Y.S. ksi | Longitudinal Flange - Spec. L-4 El % in 4D | Short-Transverse Flange - Spec. N-4 T.S. ksi | Short-Transverse Flange - Spec. N-4 Y.S. ksi | Short-Transverse Flange - Spec. N-4 El % in 4D |
|---|---|---|---|---|---|---|---|---|---|---|
| S-399205 Reheat-treated 4 hr @ 875 F, quenched in water @ 140 F & aged as indicated | | | | | | | | | | |
| -1 | 24/250+20/300 | 94.7 | 91.1 | 11.0 | 91.3 | 85.1 | 10.0 | 82.3 | 75.0 | 8.0 |
| -2 | 24/250+40/300 | 91.0 | 86.0 | 11.0 | | | | 81.7 | 73.2 | 8.0 |
| -3 | 24/250+60/300 | 88.8 | 81.7 | 12.0 | 84.7 | 79.8 | 10.0 | 79.0 | 69.4 | 8.0 |
| -4 | 24/250+14/320 | 89.6 | 85.6 | 11.5 | | | | 80.5 | 72.8 | 6.0 |
| -5 | 24/250+28/320 | 84.6 | 79.0 | 12.0 | | | | 78.4 | 69.2 | 8.0 |
| -6 | 24/250+42/320 | 77.5 | 69.3 | 13.0 | | | | 70.7 | 59.8 | 8.0 |
| -7 | 24/250+10/340 | 83.1 | 77.2 | 11.0 | | | | 76.4 | 66.3 | 8.0 |
| -8 | 24/250+20/340 | 76.2 | 67.6 | 13.0 | | | | 69.9 | 58.5 | 8.0 |
| -9 | 24/250+30/340 | 72.6 | 62.6 | 13.0 | | | | 66.7 | 54.1 | 8.0 |
| -10 | 24/250+6/360 | 76.5 | 67.8 | 14.0 | 73.4 | 63.5 | 14.0 | 70.3 | 58.9 | 8.0 |
| -11 | 24/250+12/360 | 70.1 | 59.8 | 14.0 | | | | 66.6 | 52.5 | 12.0 |
| -12 | 24/250+18/360 | 66.4 | 55.1 | 14.5 | 63.5 | 52.0 | 14.0 | 61.0 | 47.2 | 12.0 |
| S-399204 Reheat-treated 4 hr @ 875 F, quenched in water @ 140 F & aged as indicated | | | | | | | | | | |
| -1 | 24/250+20/300 | 92.0 | 88.7 | 8.5 | 90.6 | 87.0 | 8.0 | 81.3 | 72.8 | 6.0 |
| -2 | 24/250+40/300 | 87.9 | 83.6 | 10.0 | | | | 79.6 | 71.6 | 6.0 |
| -3 | 24/250+60/300 | 85.0 | 80.3 | 11.5 | 83.3 | 77.6 | 10.0 | 76.4 | 69.2 | 6.0 |
| -4 | 24/250+14/320 | 88.0 | 84.0 | 9.5 | | | | 78.9 | 72.4 | 4.0 |
| -5 | 24/250+28/320 | 82.7 | 77.1 | 11.0 | | | | 75.6 | 67.1 | 6.0 |
| -6 | 24/250+42/320 | 75.8 | 67.8 | 12.0 | | | | 69.1 | 58.1 | 8.0 |
| -7 | 24/250+10/340 | 81.6 | 75.1 | 10.5 | | | | 74.0 | 64.6 | 8.0 |
| -8 | 24/250+20/340 | 74.3 | 65.2 | 12.0 | | | | 67.9 | 56.9 | 10.0 |
| -9 | 24/250+30/340 | 70.4 | 60.3 | 12.0 | | | | 65.9 | 52.8 | 10.0 |
| -10 | 24/250+6/360 | 74.5 | 65.8 | 13.0 | 73.6 | 65.4 | 12.0 | 74.2 | 58.5 | 12.7 |
| -11 | 24/250+12/360 | 68.2 | 57.8 | 13.0 | | | | 64.8 | 51.2 | 10.0 |
| -12 | 24/250+18/360 | 64.6 | 53.0 | 13.5 | 63.0 | 50.8 | 12.0 | 60.6 | 46.3 | 10.0 |

APPENDIX I

Table XLIV (Continued)

TENSILE TESTS ON 7049-T7X DIE FORGINGS DIE NO. 9078

| Dash No. | Aging[1] | Electrical Conductivity | Longitudinal Web - Spec. L-6 T.S. ksi | Longitudinal Web - Spec. L-6 Y.S. ksi | Longitudinal Web - Spec. L-6 El % in 4D | Longitudinal Flange - Spec. L-4 T.S. ksi | Longitudinal Flange - Spec. L-4 Y.S. ksi | Longitudinal Flange - Spec. L-4 El % in 4D | Short-Transverse Flange - Spec. [illegible] T.S. ksi | Short-Transverse Flange - Spec. [illegible] Y.S. ksi | Short-Transverse Flange - Spec. [illegible] El % in 4D |
|---|---|---|---|---|---|---|---|---|---|---|---|
| S-399301 Reheat-treated 4 hr @ 930 F, C.W.Q., and aged as indicated | | | | | | | | | | | |
| -1 | 24/250+40/300 | 35.8 | 93.0 | 89.6 | 11.5 | 91.5 | 87.8 | 10.0 | 84.6 | 79.0 | 6.0 |
| -2 | 24/250+70/300 | 38.0 | 88.4 | 84.2 | 12.5 | | | | 83.4 | 75.9 | 8.0 |
| -3 | 24/250+100/300 | 40.0 | 84.3 | 79.4 | 14.0 | 84.2 | 78.6 | 14.0 | 80.2 | 72.4 | 8.0 |
| -4 | 24/250+14/320 | 35.7 | 93.8 | 91.2 | 11.5 | | | | 85.4 | 79.2 | 8.0 |
| -5 | 24/250+28/320 | 38.6 | 85.6 | 81.0 | 13.0 | | | | 79.8 | 71.7 | 8.0 |
| -6 | 24/250+42/320 | 40.1 | 82.5 | 77.4 | 14.0 | | | | 78.0 | 69.8 | 8.0 |
| -7 | 24/250+4/340 | 36.5 | 92.6 | 90.2 | 12.0 | | | | 84.5 | 77.8 | 6.0 |
| -8 | 24/250+12/340 | 39.3 | 84.4 | 78.8 | 14.0 | | | | 80.2 | 71.7 | 8.0 |
| -9 | 24/250+20/340 | 40.8 | 80.2 | 73.0 | 14.0 | | | | 76.4 | 66.6 | 8.0 |
| -10 | 24/250+2/360 | 38.4 | 88.0 | 83.8 | 13.0 | 87.1 | 82.0 | 12.0 | 82.5 | 75.4 | 8.0 |
| -11 | 24/250+7/360 | 40.5 | 78.2 | 70.9 | 14.0 | | | | 74.6 | 63.9 | 10.0 |
| -12 | 24/250+12/360 | 42.1 | 72.7 | 63.4 | 14.0 | 72.0 | 62.2 | 14.0 | 70.1 | 57.8 | 10.0 |

Note: 1. Hr @ temp °F.

APPENDIX I

Table XLV

MECHANICAL PROPERTIES OF 7049-T7X DIE FORGING DIE NO. 15621
HEAT TREATED @ 875 F, QUENCHED IN WATER @ 140 F AND AGED 24 HR/350 F + 14 HR/320 F
S-398957

| Location | Thickness | Grain Direction | Tensile Properties T.S. ksi | Y.S. ksi | El % in 4D | Fracture Toughness ksi√in |
|---|---|---|---|---|---|---|
| 5 | 1.4 | Longitudinal | 78.8 | 71.3 | 12.5 | |
| 6 | 1.5 | Longitudinal | 80.4 | 73.7 | 12.5 | |
| 8 | 4.4 | Longitudinal | 79.6 | 72.3 | 14.5 | |
| 9 | 4.4 | Longitudinal | 78.7 | 70.3 | 14.5 | |
| 12 | 1.6 | Longitudinal | 77.2 | 70.1 | 12.0 | |
| LT-2 | | Longitudinal | | | | 35.4 |
| LT-1 | | Longitudinal | | | | 28.4 |
| 4 | 1.4 | Long-Transverse | 79.4 | 72.7 | 10.5 | |
| 10 | 1.6 | Long-Transverse | 80.2 | 72.7 | 12.5 | |
| 11 | 1.3 | Long-Transverse | 81.9 | 73.7 | 12.5 | |
| 1 | 0.8 | Long-Transverse | 83.0 | 76.8 | 11.0 | |
| 2 | 0.8 | Short-Transverse | 79.4 | 74.3 | 10.0 | |
| 3 | 1.4 | Short-Transverse | 77.6 | 71.1 | 7.0 | |
| 7 | 2.6 | Short-Transverse | 77.6 | 70.3 | 8.0 | |
| SL-1 | | Short-Transverse | | | | 21.3* |
| SL-2 | | Short-Transverse | | | | 20.7 |

*$K_Q$ not valid $K_{Ic}$.

APPENDIX

Table XLVI

MECHANICAL PROPERTIES 7049-T73 DIE FORGINGS DTL NO. 16347

| Location | Thickness | Grain Direction | S-398895 2nd-Step Aged 14 hr @ 320 Tensile Properties T.S. ksi | Y.S. ksi | El % in 4D | Fracture Toughness ksi $\sqrt{in.}$ | S-404714 2nd-Step Aged 22 hr @ 320 Tensile Properties T.S. ksi | Y.S. ksi | El % in 4D |
|---|---|---|---|---|---|---|---|---|---|
| 2 | 1.3 | Longitudinal | 78.6 | 71.5 | 14.0 | | 78.9 | 71.9 | 11.5 |
| 7 | 1.3 | Longitudinal | 76.7 | 68.4 | 12.5 | | 74.9 | 76.5 | 14.0 |
| Prolongation | | Longitudinal | 80.1 | 72.7 | 13.5 | | 77.5 | 69.2 | 13.5 |
| LT-1 | | Longitudinal | | | | 30.0 | | | |
| LT-2 | | Longitudinal | | | | 28.2 | | | |
| 3 | 2.5 | Long-Transverse | 78.1 | 70.4 | 13.5 | | 75.0 | 65.7 | 14.0 |
| 4 | 1.1 | Long-Transverse | 79.2 | 71.1 | 12.0 | | 78.2 | 70.1 | 10.0 |
| 5 | 2.5 | Long-Transverse | 78.5 | 70.5 | 12.5 | | 77.1 | 67.7 | 13.0 |
| TL-1 | | Long-Transverse | | | | 22.6 | | | |
| 1 | 2.0 | Short-Transverse | 76.8 | 68.6 | 12.0 | | 75.4 | 66.3 | 14.0 |
| 6 | 2.0 | Short-Transverse | 79.3 | 71.9 | 12.0 | | 76.4 | 67.4 | 10.5 |
| SL-1 | | Short-Transverse | | | | 23.4 | | | |

Forgings heat treated @ 875 F, quenched in water @ 140 F and artificially aged 24 hr/250 F + indicated 2nd-step aging.

APPENDIX I

Table XLVII

TENSILE PROPERTIES OF 7175-T7X DIE FORGINGS

| S. No. | Die No. | Elec. Cond. % IACS | Longitudinal T.S. ksi | Longitudinal Y.S. ksi | Longitudinal El % in 4D | Short-Transverse T.S. ksi | Short-Transverse Y.S. ksi | Short-Transverse El % in 4D |
|---|---|---|---|---|---|---|---|---|
| 338106 | 9078 | 39.3 | | | | 77.8 | 67.6 | 10.0 |
| 338113 | 9078 | 39.5 | | | | 78.4 | 67.6 | 9.5 |
| 366254 | 9078 | 39.2 | | | | 77.6 | 68.5 | 9.3 |
| 366379 | 9078 | 39.6 | | | | 78.4 | 68.7 | 10.0 |
| 366380 | 9078 | 39.7 | | | | 77.6 | 67.4 | 10.0 |
| 366381 | 9078 | 39.3 | | | | 77.6 | 67.8 | 10.0 |
| 366382 | 9078 | 39.6 | | | | 77.5 | 66.6 | 10.0 |
| 366383 | 9078 | 39.6 | | | | 74.6 | 65.8 | 8.5 |
| 366384 | 9078 | 40.2 | | | | 76.2 | 65.7 | 10.0 |
| 366385 | 9078 | 39.4 | | | | 77.8 | 67.8 | 8.0 |
| 366386 | 9078 | 39.8 | | | | 75.4 | 64.0 | 10.0 |
| 410701 | 9078 | -- | 82.1 | 75.0 | 13.5 | 74.4 | 64.4 | 10.0 |
| 337200 | 40001 | 39.0 | | | | 77.8 | 68.7 | 7.5 |
| 337202 | 40001 | 39.9 | | | | 74.7 | 65.4 | 8.0 |
| 366865 | 40001 | 40.2 | | | | 75.7 | 64.6 | 10.0 |
| 369311 | 40001 | 39.5 | | | | 77.3 | 68.7 | 8.2 |
| 377676 | 40001 | 39.2 | | | | 75.6 | 67.0 | 8.0 |
| 377879 | 40001 | 38.2 | | | | 76.2 | 67.6 | 8.0 |
| 377483 | 40002 | 39.6 | | | | 74.6 | 65.8 | 8.5 |
| 377543 | 40006 | 39.6 | | | | 75.3 | 65.5 | 7.5 |
| 377544 | 40007 | 39.2 | | | | 74.9 | 66.2 | 5.5 |
| 338075 | 15633 | 39.0 | | | | 78.8 | 69.9 | 6.5 |
| 338076 | 15633 | 39.0 | | | | 78.6 | 69.1 | 8.0 |
| 396354 | 40001 | 40.2 | 78.9 | 71.9 | -- | 74.4 | 66.0 | 7.0 |
| 396355 | 40001 | 40.4 | 76.8 | 68.0 | -- | 73.6 | 64.8 | 10.0 |
| 396358 | 40001 | 40.4 | 78.6 | 70.2 | -- | 73.1 | 65.0 | 8.0 |
| 396359 | 40001 | 40.6 | 77.7 | 69.4 | -- | 71.8 | 64.6 | 10.0 |
| 396331 | 40001 | 39.2 | 78.4 | 70.9 | -- | 78.6 | 69.6 | 10.0 |
| 410703 | 40006 | -- | 78.5 | 69.3 | 14.0 | 73.5 | 63.5 | 8.0 |

Note Data have been included for some 7175 forgings receiving slightly less aging than is used for production 7175-T736 forgings.

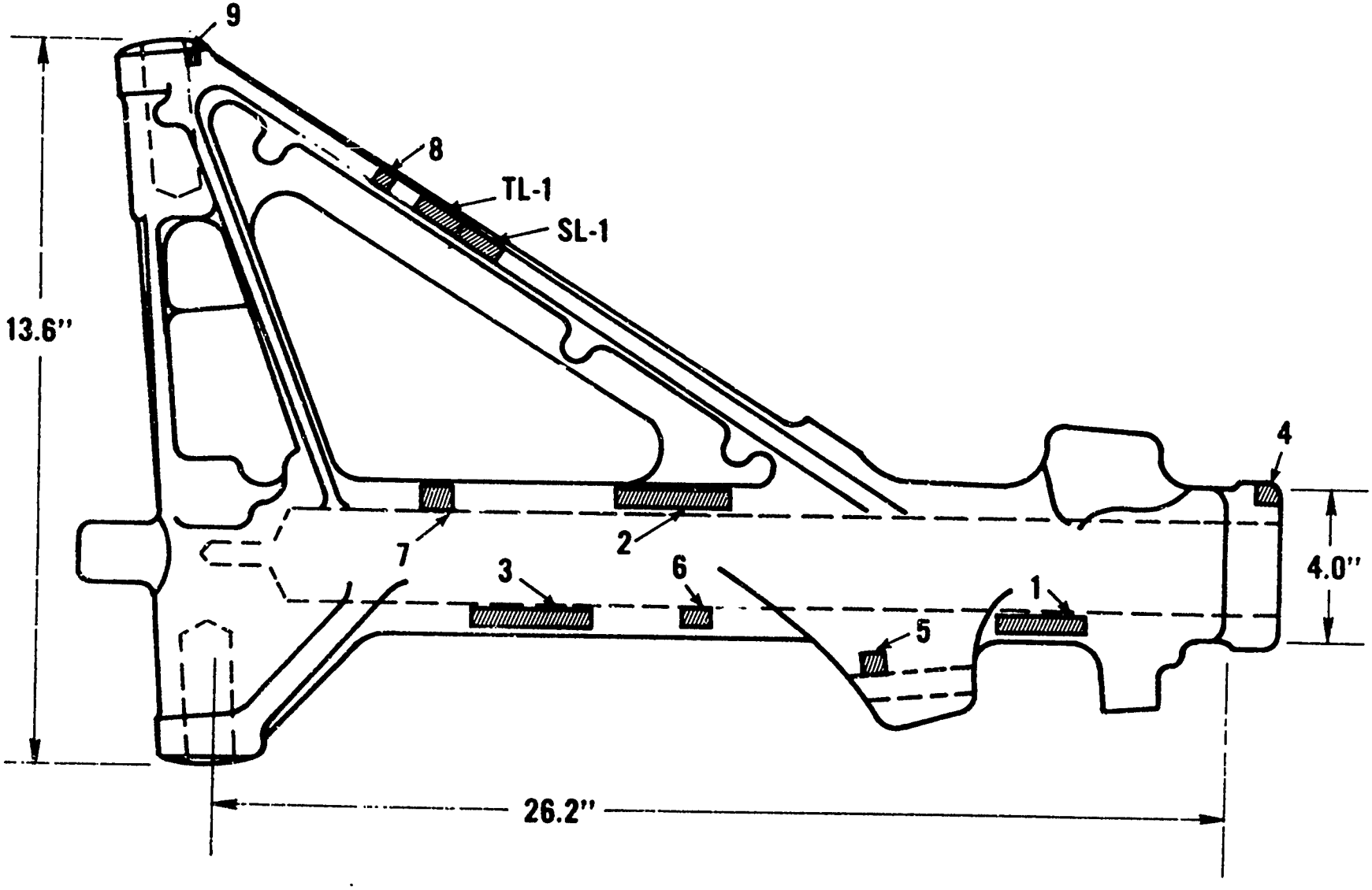


**LANDING GEAR PART**
**DIE NO. 9619**

**APPENDIX I - FIGURE 27**

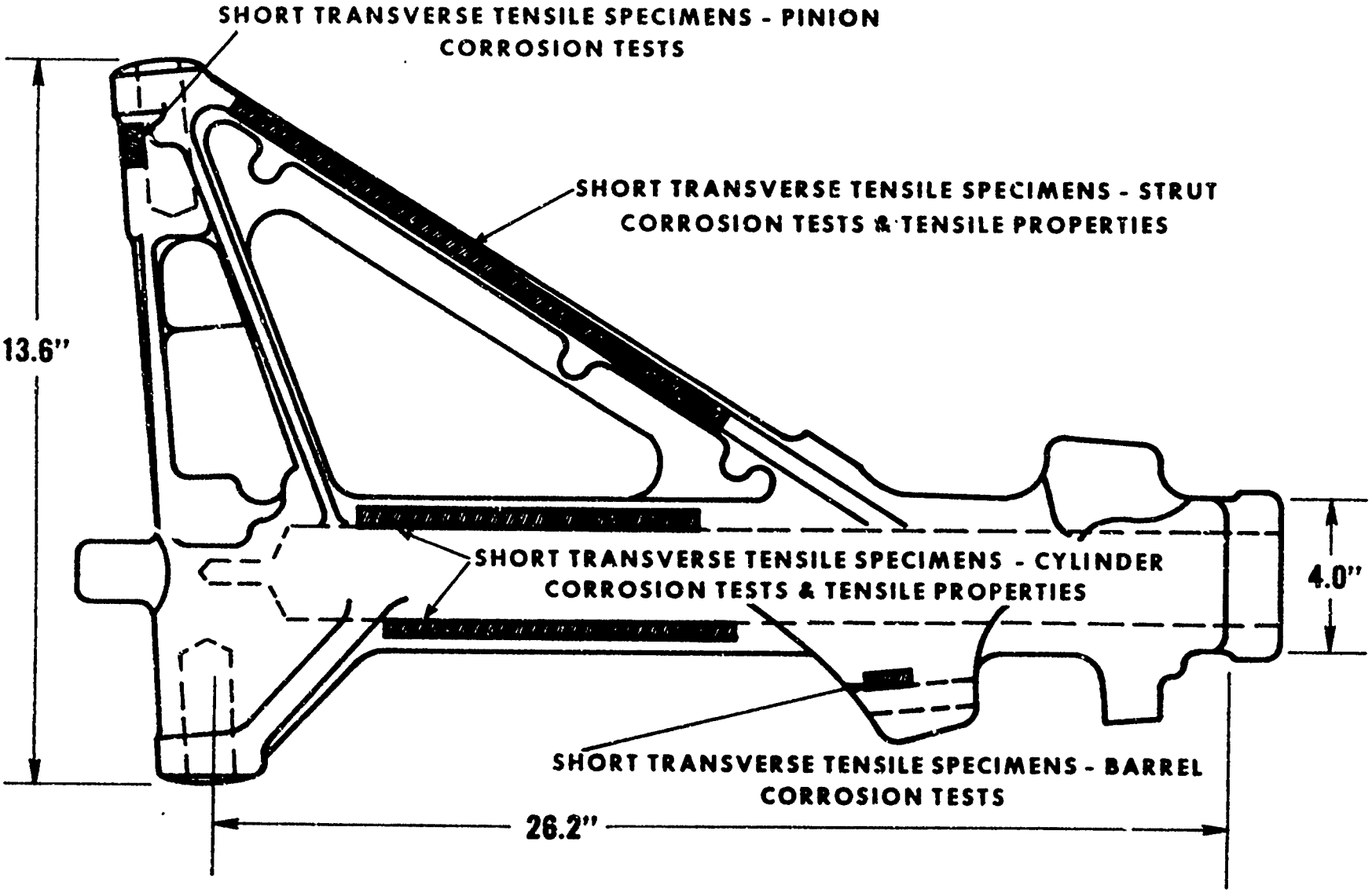


**LANDING GEAR PART**
**DIE NO. 9619**

**APPENDIX I - FIGURE 28**

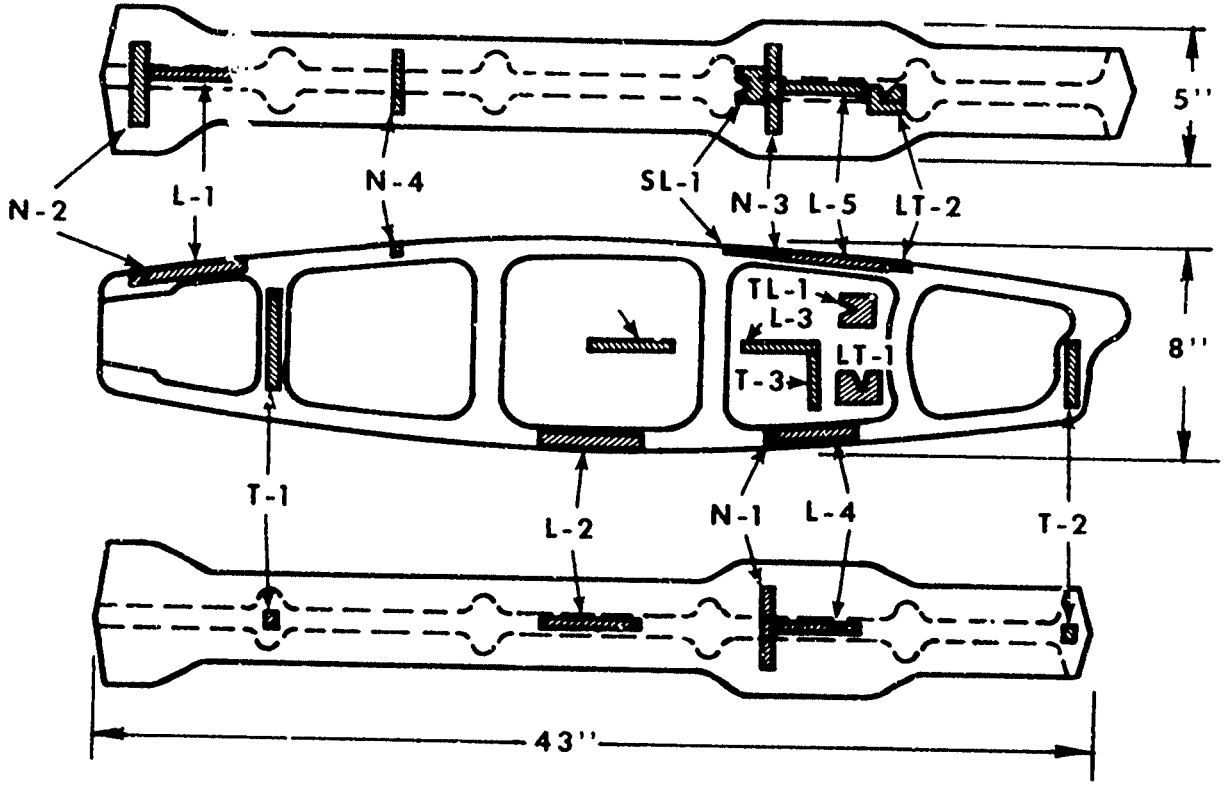


# WEB-FLANGE DIE FORGING

## DIE NO. 9078

## APPENDIX I - FIGURE 29

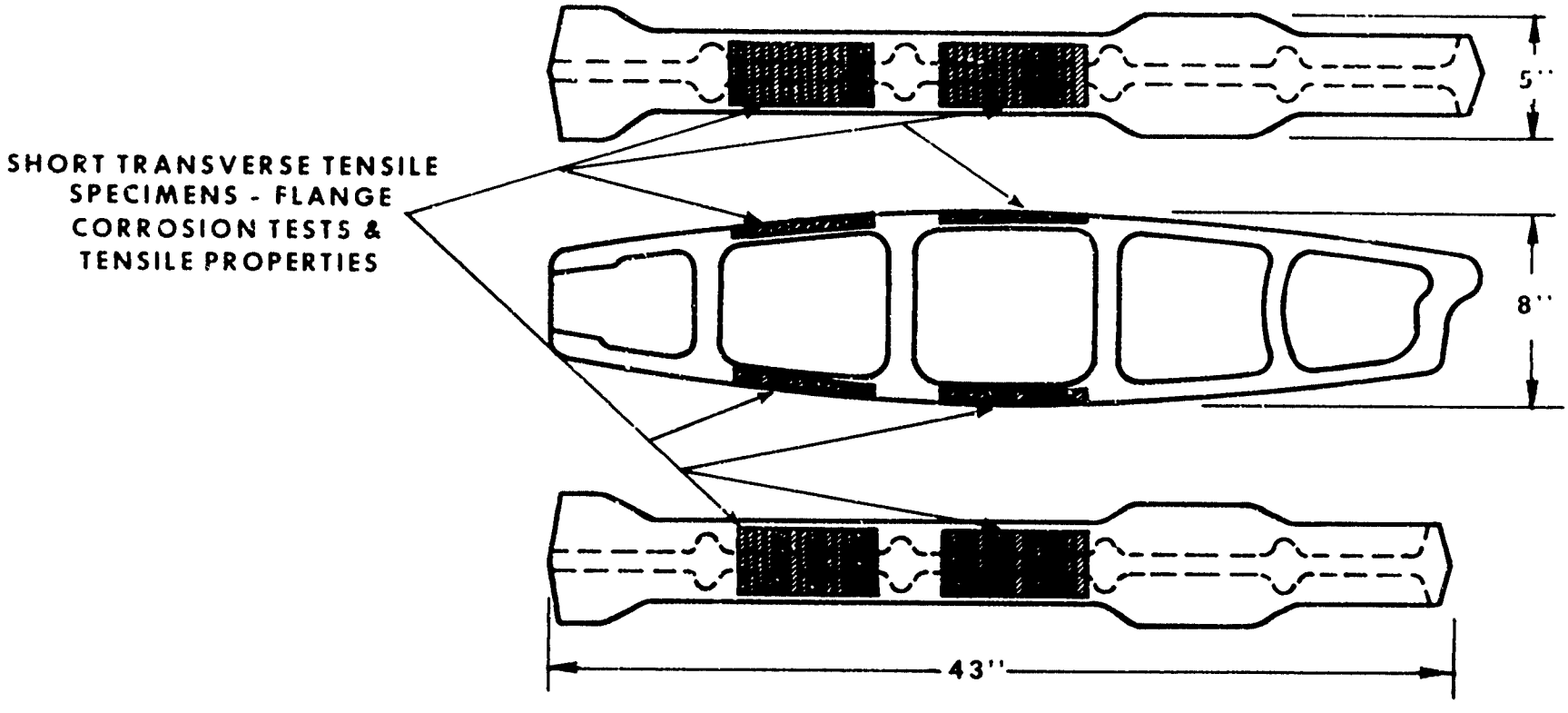


**WEB-FLANGE DIE FORGING**

**DIE NO. 9078**

**APPENDIX I - FIGURE 30**

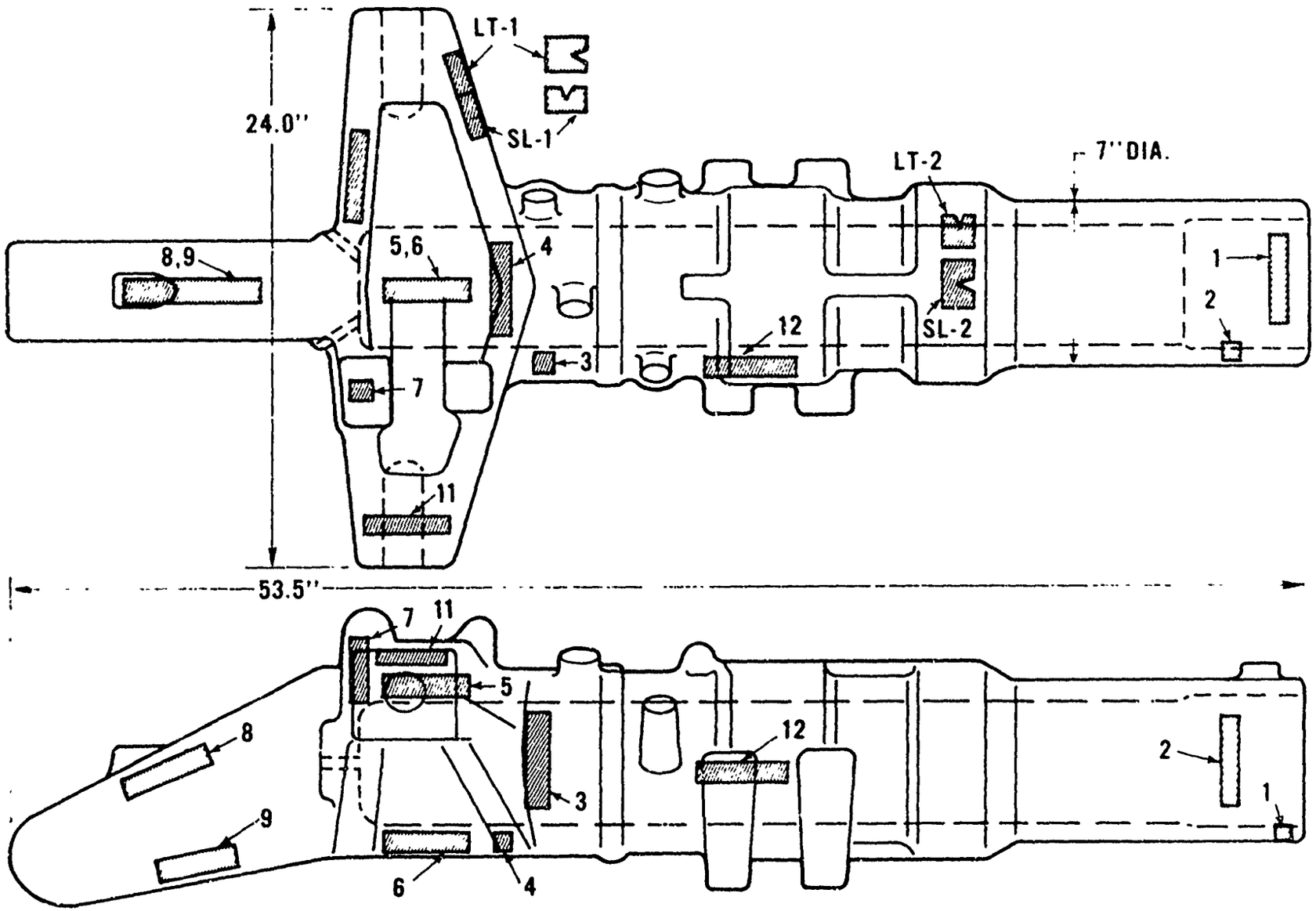


**LANDING GEAR CYLINDER**
**DIE 15621**
**MACHINED WT. 185 POUNDS**
**APPENDIX I - FIGURE 31**

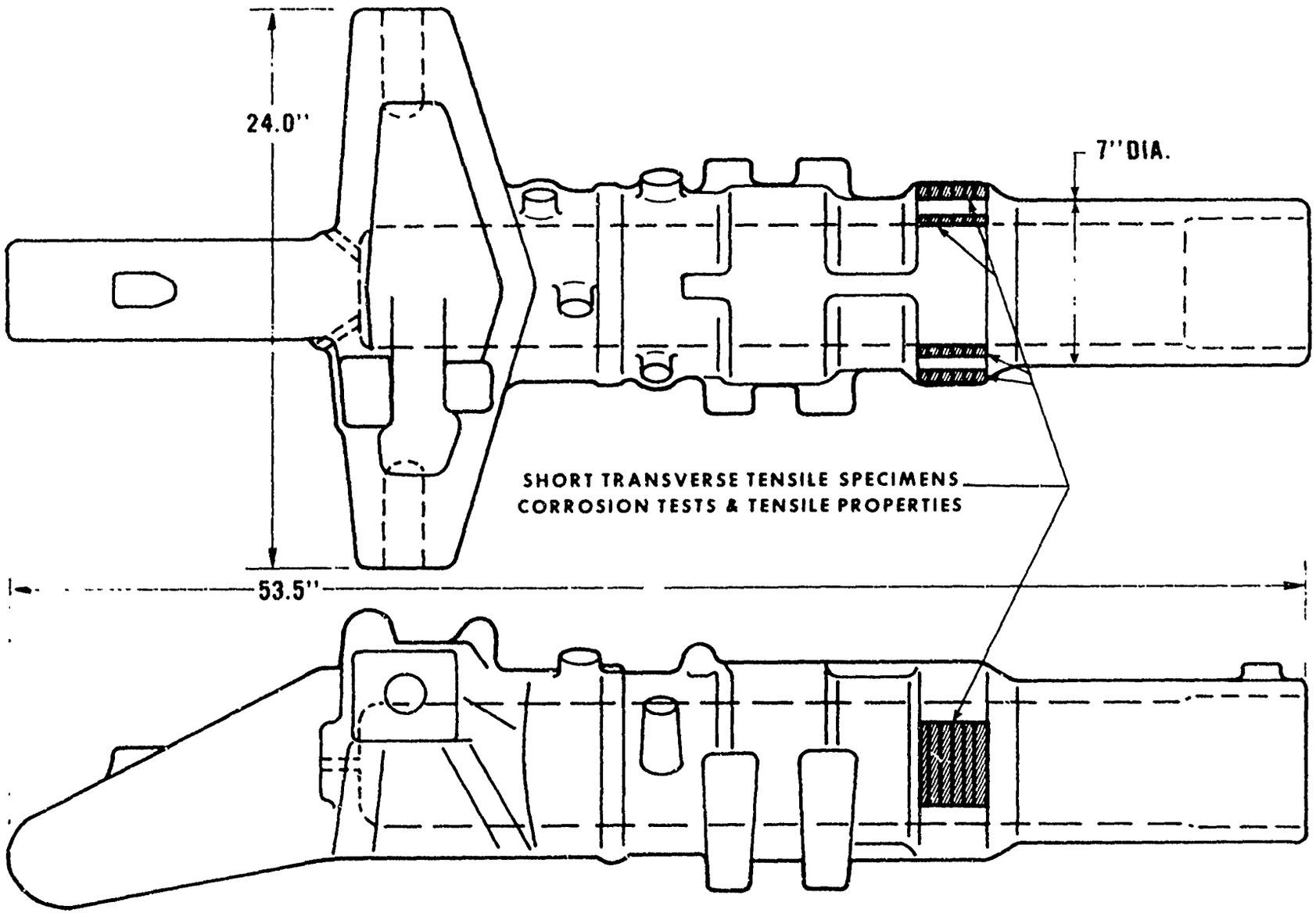


**LANDING GEAR CYLINDER**
**DIE 15621**
**MACHINED WT. 185 POUNDS**
**APPENDIX I - FIGURE 32**

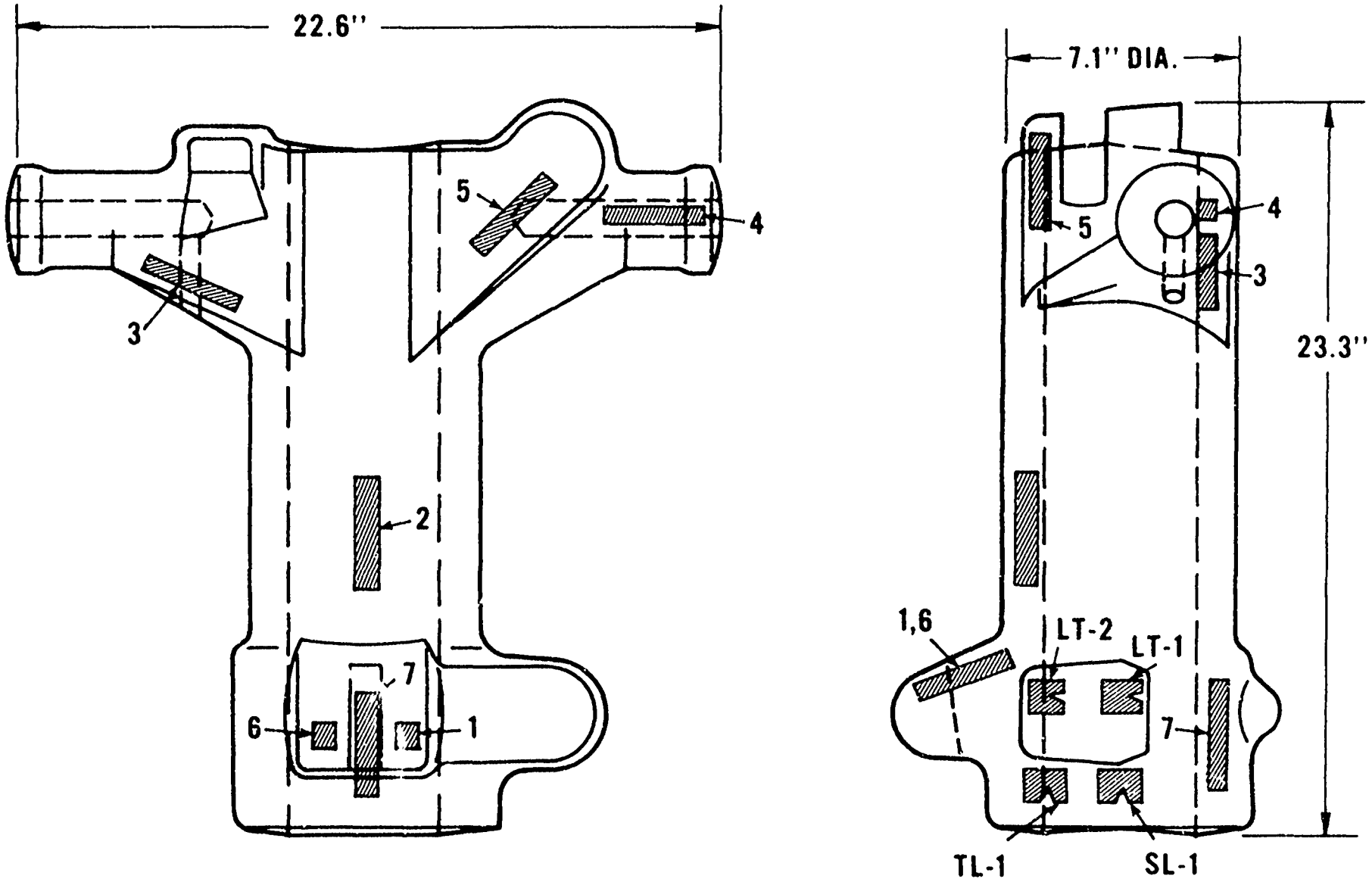


# LANDING GEAR CYLINDER

## DIE 16347

## MACHINED WT. 100 POUNDS

## APPENDIX I - FIGURE 33

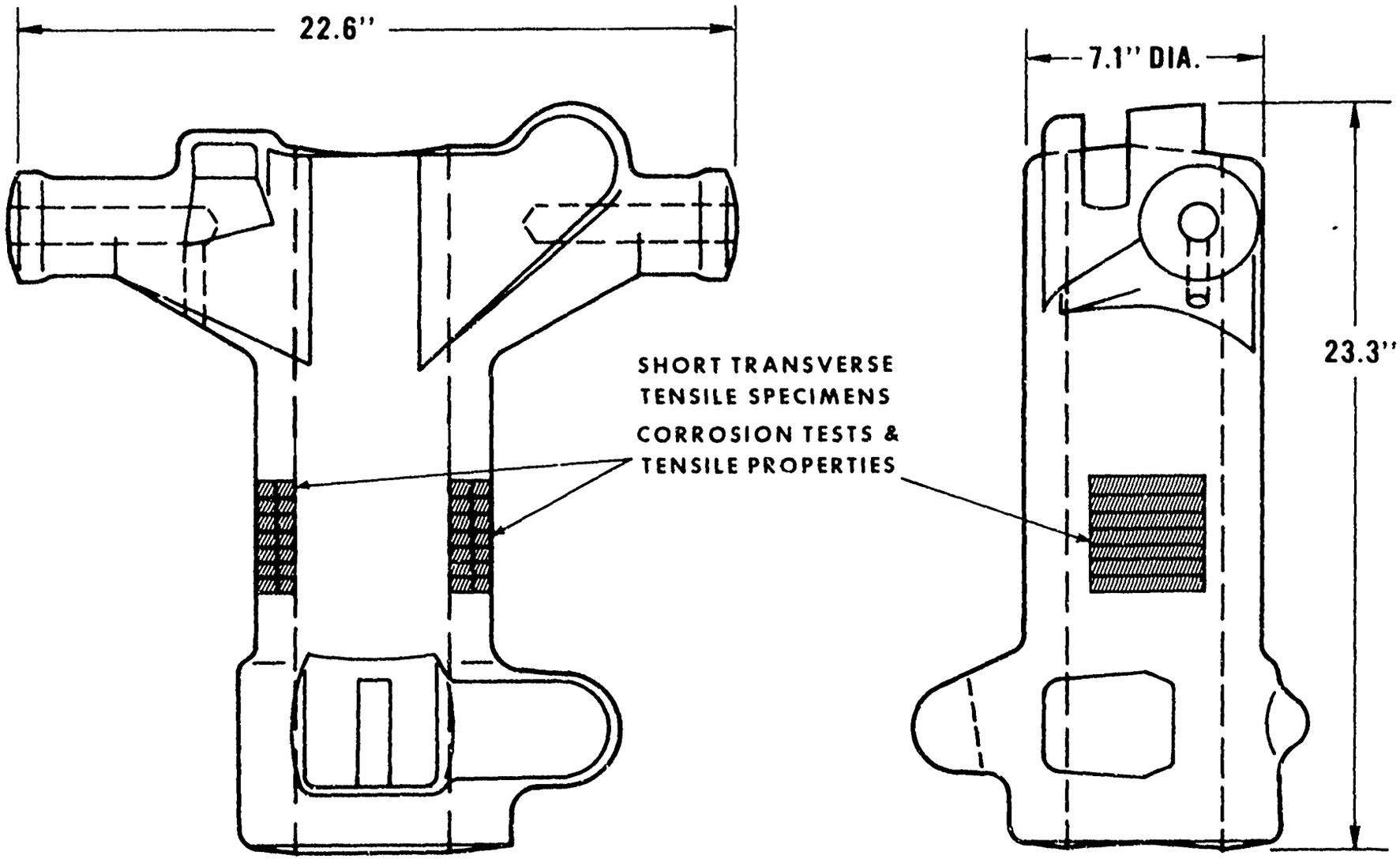


**LANDING GEAR CYLINDER**
**DIE 16347**
**MACHINED WT. 100 POUNDS**

**APPENDIX I - FIGURE 34**

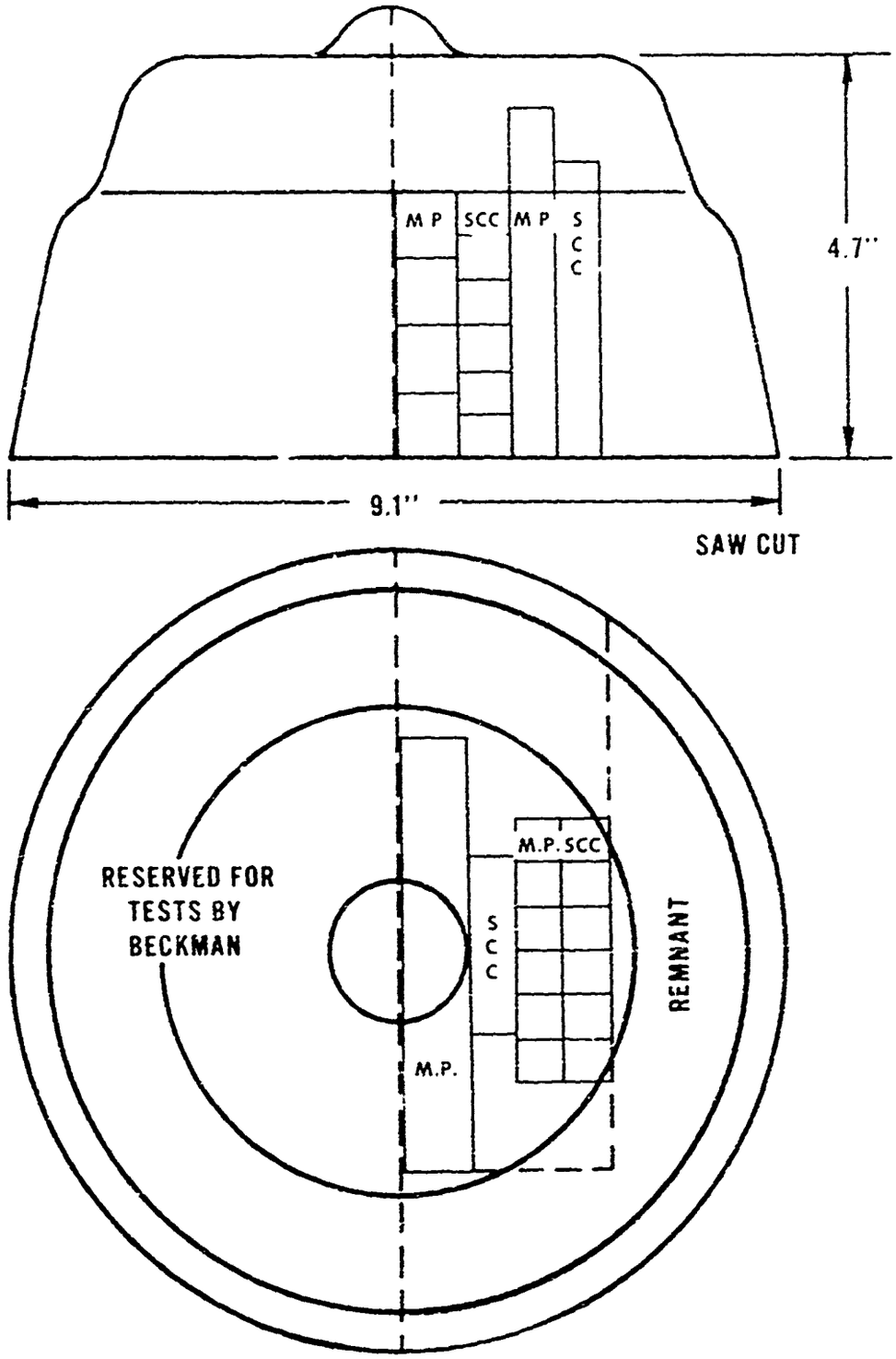


# X7050 ALLOY TEST LOCATIONS
## DIE NO. 10853

## APPENDIX I - FIGURE 35

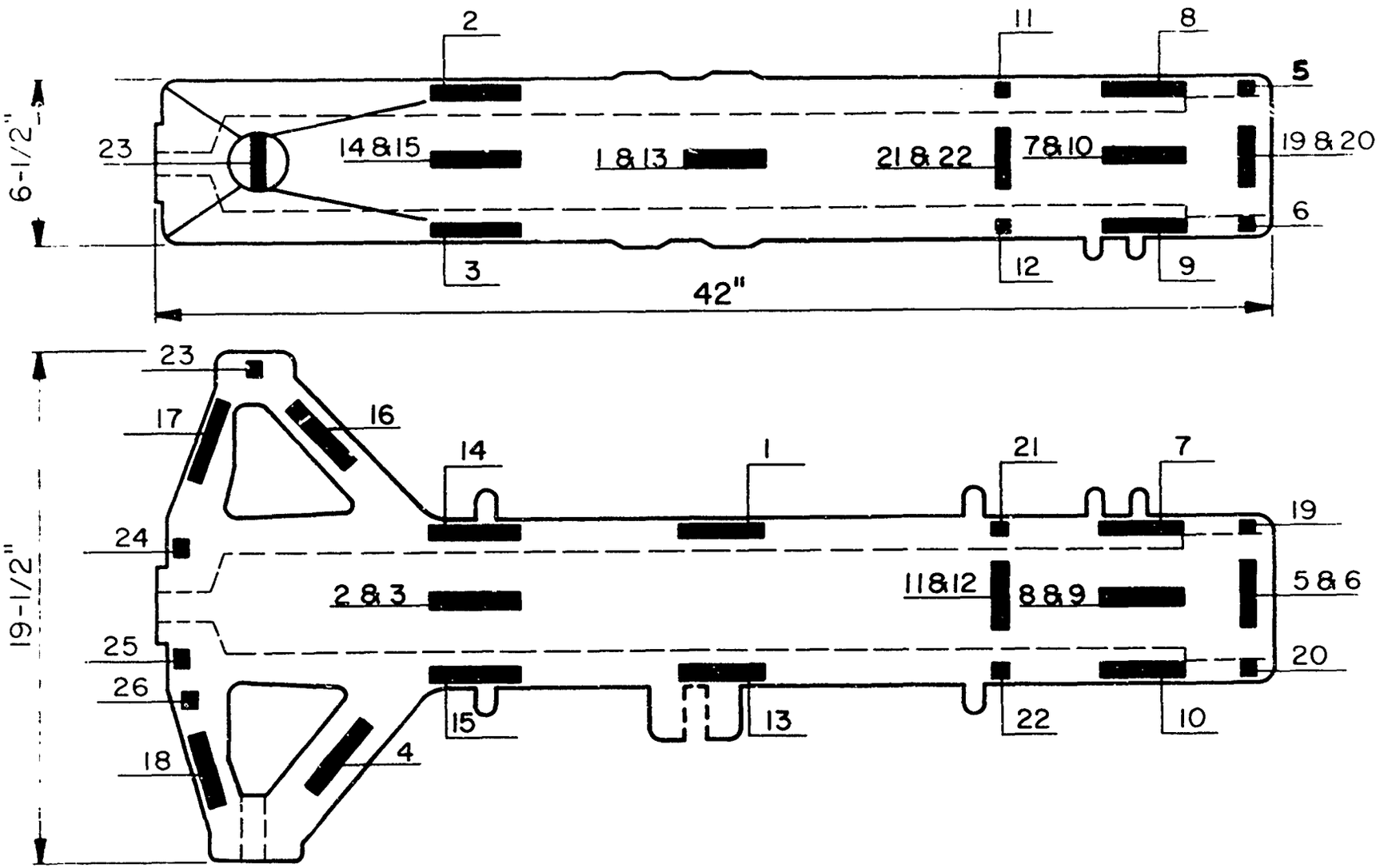


TEST BAR LOCATIONS, ALCOA DIE 15093

APPENDIX I - FIGURE 36

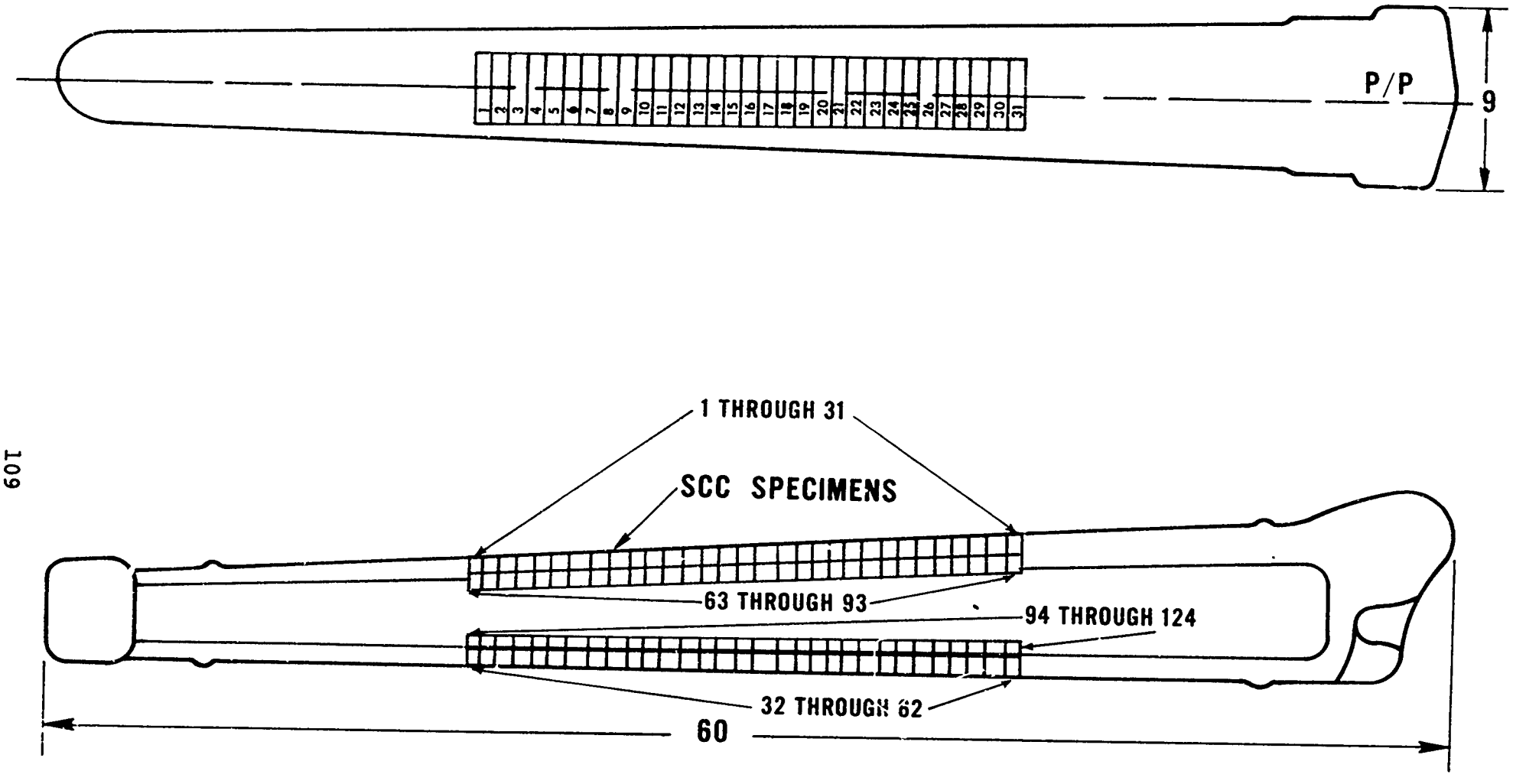


LOCATION OF SHORT-TRANSVERSE SCC SPECIMENS IN DIE FORGING 8457

APPENDIX I - FIGURE 37

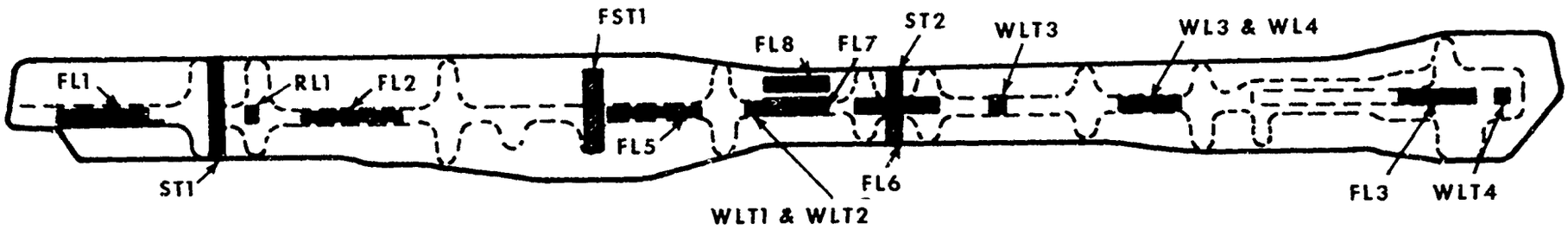


**DIE NO. 15789**

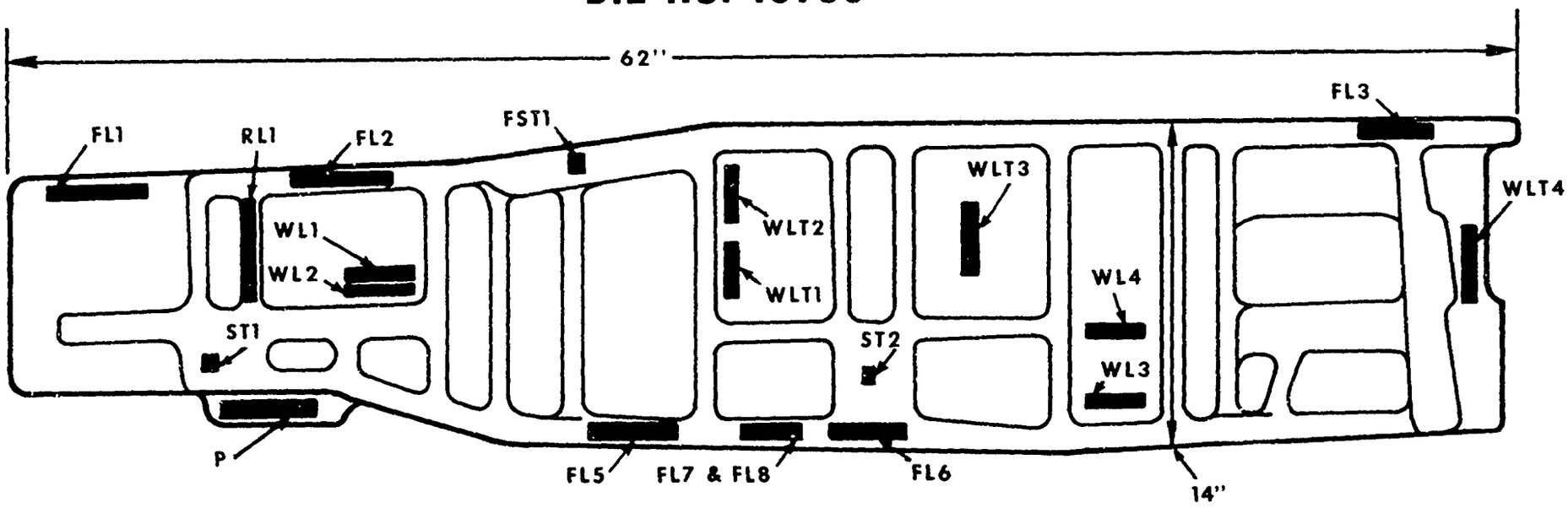


**APPENDIX I - FIGURE 38**

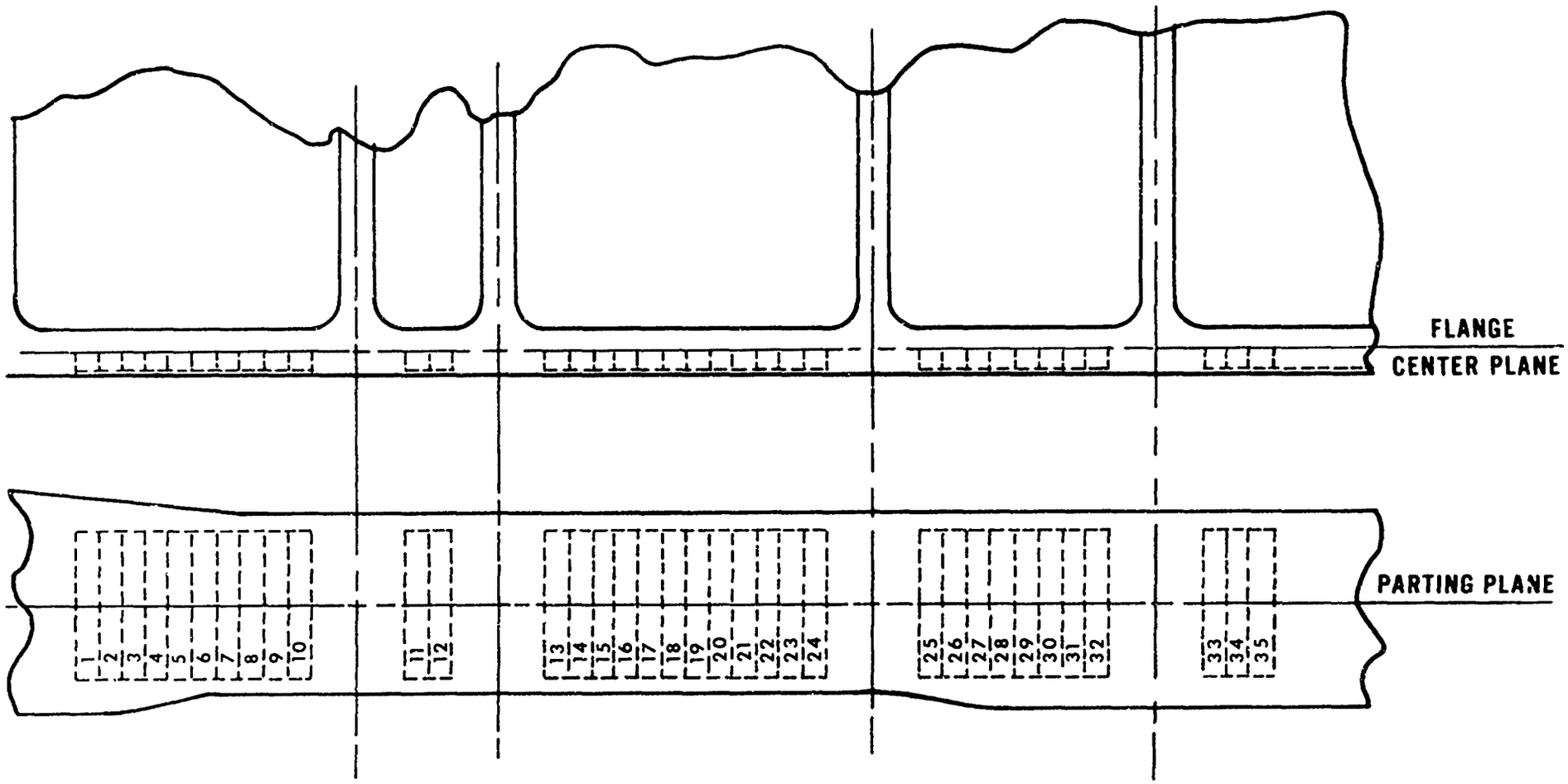


# SCC SPECIMEN LOCATION
## DIE NO. 15789

## APPENDIX I - FIGURE 39

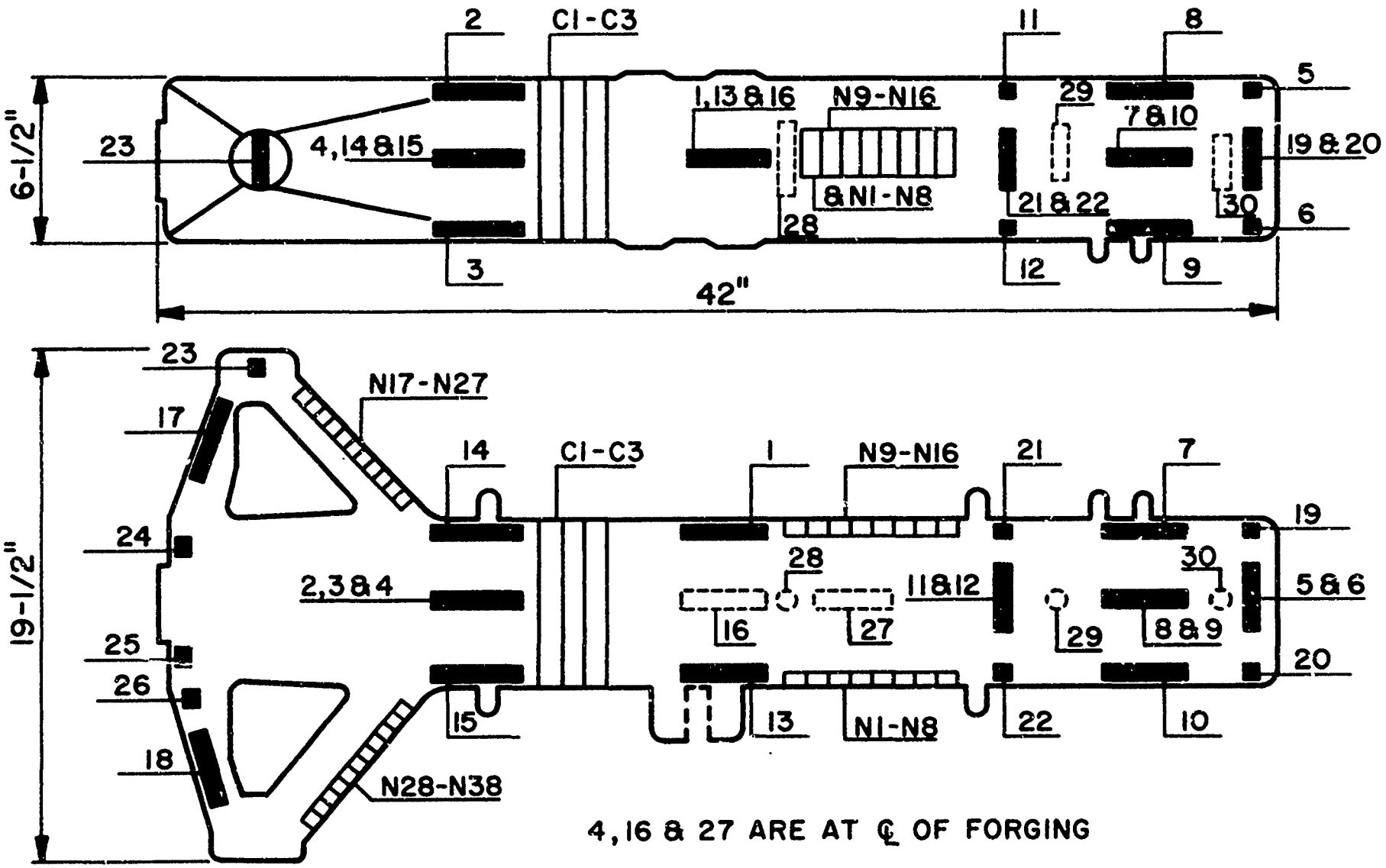


# TEST BAR LOCATIONS, ALCOA DIE 15093

APPENDIX I - FIGURE 40

SECTION X

APPENDIX II

PROBIT ANALYSIS

The use of probit analysis presupposes that for any one subject (stress-corrosion test specimen) exposed under controlled conditions for a definite time, there will be a certain stimulus (test stress) applied to the subject at a stated dose (stress level) below which failure does not occur, and above which failure occurs. This stress level is the critical stress. In addition, there may be a measurable characteristic of the subjects tested (yield strength of the test specimen) below which failure does not occur and above which failure occurs. This characteristic is the critical yield strength. Because the critical stress level and the critical yield strength will vary from specimen to specimen in the population and is likely to vary from one occasion to another as a result of uncontrolled internal variables (e.g., grain structure) or external variations (e.g., ambient humidity) the concept of a mean critical stress and a mean critical strength must be introduced.

The frequency distribution of critical stress or critical strength over the population studied must be known before mean critical stress and mean critical strength can be accurately estimated. In this report, it is assumed that the frequency distribution is the familiar Gaussian or normal form.

Probit analysis determines estimates of the constants a, b, and c in the equation:

$$Y = a + b \cdot AS + c \cdot YS. \qquad (1)$$

where YS = yield strength and AS = applied stress. The term Y is obtained from the relationship:

$$PS = \frac{1}{2\pi} \int_{-\infty}^{Y-5} \exp\left(\frac{-x^2}{2}\right) dx \qquad (2)$$

where PS = percent survived and x is a dummy variable.

## APPENDIX II

To determine the constants, data sets consisting of yield strength, test stress, number of specimens exposed, and number of specimens survived are prepared. Using the iterative technique of pattern search, the constants are varied until the discrepancy between the observed proportions surviving and the predicted proportions surviving is minimized. Mean critical strength at a stress AS is determined by solving equation (1) with Y=5.

Figure 41 illustrates the method of determining the overall probability of passing the SCC test when yield strength is a normally distributed variable. Figure 41a illustrates the effect of yield strength on the probability of passing the stress-corrosion test at a particular stress, while Figure 41b illustrates the distribution of strength values expected at a standard deviation, $\sigma_{YS}$, of 3. To determine the overall probability, $P_o$, that this material will pass the SCC test, the products of the areas under each curve between minimum strength, $YS_{min}$, to maximum strength, $YS_{max}$, ($YS_{min}$ + 5.5 $\sigma_{YS}$) are determined. This calculation can be expressed mathematically as follows:

$$P_o = \int_{YS_{min}}^{YS_{max}} N \, dYS \cdot \int_{YS_{min}}^{YS_{max}} PS \, dYS \qquad (3)$$

where $N = \frac{1}{\sigma_{YS}^2} \exp - \frac{1}{2} \left(\frac{YS - \mu}{YS}\right)^2$,

$\mu$ = mean YS,

PS = previously described

According to Finney,[9] the solution to Equation 3 can be expressed by Equation 2 where

$$Y = 5 + (a-5 + c\mu)/(1 + c^2 \sigma_{YS}^2)^{1/2} + AS \cdot b/(1 + c \sigma_{YS}^2)^{1/2}. \qquad (4)$$

The terms in this equation are as described previously.

The survival percentages for the 7050 and 7049 die forgings plotted in Figures 25 and 26 were estimated by calculating $P_o$ as above with $\mu$ = 66.5 and $\sigma_{YS}$ = 3.0, then multiplying $P_o$ by 100 to get percent.

# APPENDIX II

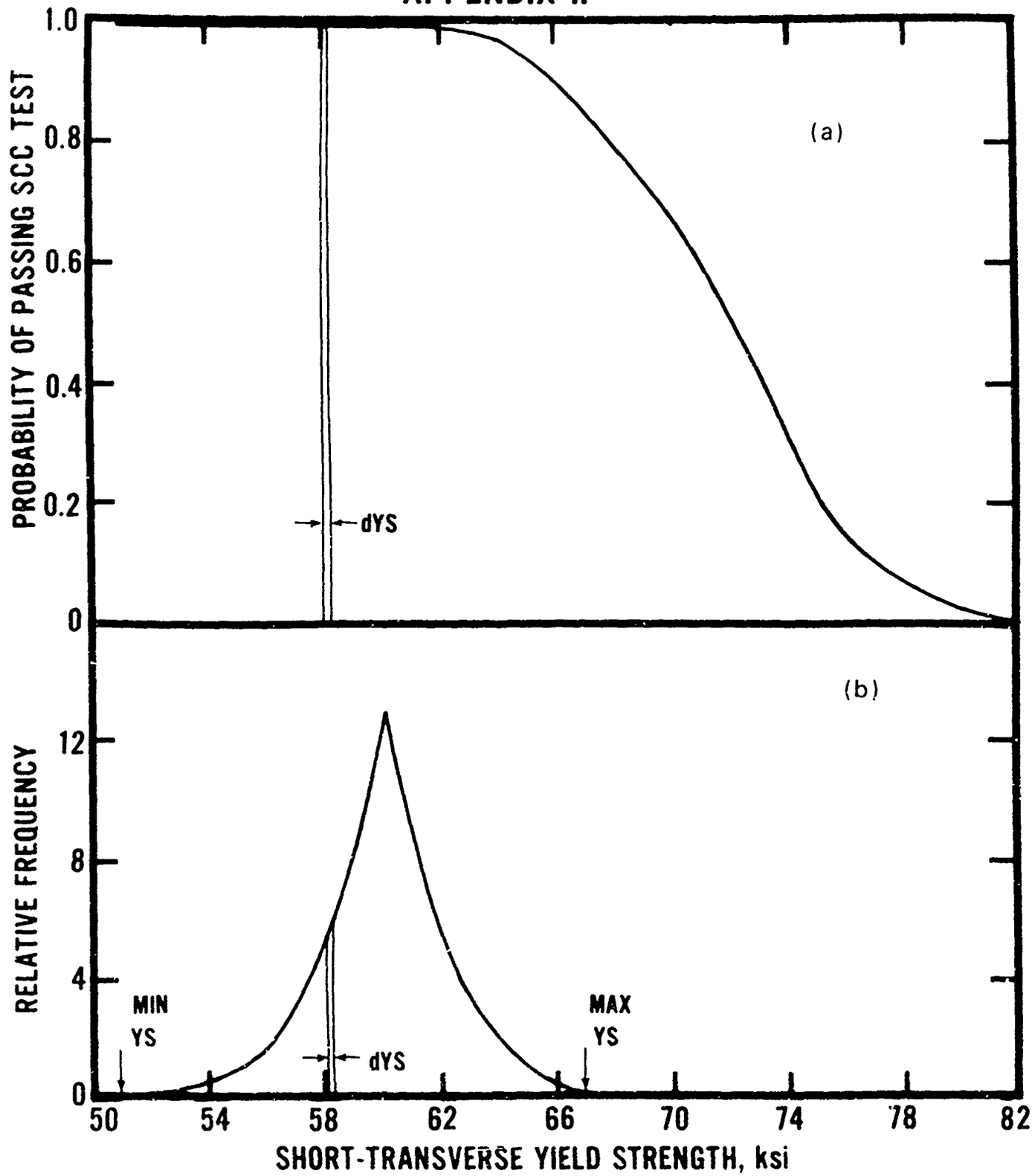


Fig. 41 METHOD OF CALCULATING OVERALL PROBABILITY OF PASSING SCC TEST