AD-763 988

PRODUCIBILITY OF ARTILLERY SHELLS MADE FROM HF-1 STEEL. REPORT OF THE AD HOC COMMITTEE ON SHELL STEEL

National Materials Advisory Board (NAS-NAE)

Prepared for:

Frankford Arsenal

April 1973

DISTRIBUTED BY:

NTIS

National Technical Information Service
U. S. DEPARTMENT OF COMMERCE
5285 Port Royal Road, Springfield Va. 22151

AD 763 988

PRODUCIBILITY OF ARTILLERY SHELLS MADE FROM HF-1 STEEL

REPORT OF THE

AD HOC COMMITTEE ON SHELL STEEL

Reproduced by
NATIONAL TECHNICAL
INFORMATION SERVICE
U S Department of Commerce
Springfield VA 22151

NATIONAL MATERIALS ADVISORY BOARD

DIVISION OF ENGINEERING - NATIONAL RESEARCH COUNCIL

Publication NMAB-307

National Academy of Sciences - National Academy of Engineering

2101 Constitution Avenue

Washington, D. C. 20418

April 1973

DISTRIBUTION ST
Approved for pu
Distribution

10

NOTICE

The project which is the subject of this report was approved by the Governing Board of the National Research Council, acting in behalf of the National Academy of Sciences. Such approval reflects the Board's judgment that the project is of national importance and appropriate with respect to both the purposes and resources of the National Research Council.

The members of the committee selected to undertake this project and prepare this report were chosen for recognized scholarly competence and with due consideration for the balance of disciplines appropriate to the project. Responsibility for the detailed aspects of this report rests with that committee.

Each report issuing from a study committee of the National Research Council is reviewed by an independent group of qualified individuals according to procedures established and monitored by the Report Review Committee of the National Academy of Sciences. Distribution of the report is approved, by the President of the Academy, upon satisfactory completion of the review process.

This study by the National Materials Advisory Board was conducted under Contract No. ~~DAAP03-72-C-0159~~ with the Department of the Army. DAAA25-73-C-0106

Members of the National Materials Advisory Board study groups serve as individuals contributing their personal knowledge and judgments and not as representatives of any organization in which they are employed or with which they may be associated.

The quantitative data published in this report are intended only to illustrate the scope and substance of information considered in the study and should not be used for any other purpose, such as in specifications or in design, unless so stated.

Requests for permission to reproduce this report in whole or in part should be addressed to the National Materials Advisory Board.

For sale by the National Technical Information Service (NTIS), Springfield, Virginia 22151.

Unclassified
SECURITY CLASSIFICATION OF THIS PAGE (When Data Entered)

REPORT DOCUMENTATION PAGE		READ INSTRUCTIONS BEFORE COMPLETING FORM
1. REPORT NUMBER NMAB-307	2. GOVT ACCESSION NO.	3. RECIPIENT'S CATALOG NUMBER
4. TITLE (and Subtitle) "Producibility of Artillery Shells Made from HF-1 Steel," report of the ad hoc Cttee on Shell Steel.		5. TYPE OF REPORT & PERIOD COVERED Final 6. PERFORMING ORG. REPORT NUMBER
7. AUTHOR(s) NMAB ad hoc Committee on Shell Steel		8. CONTRACT OR GRANT NUMBER(s) DAAA25-73-C-0106
9. PERFORMING ORGANIZATION NAME AND ADDRESS National Materials Advisory Board National Academy of Sciences 2101 Constitution Avenue Washington, D.C. 20418		10. PROGRAM ELEMENT, PROJECT, TASK AREA & WORK UNIT NUMBERS
11. CONTROLLING OFFICE NAME AND ADDRESS U.S.Army, Frankford Arsenal Tacony & Bridge Streets Philadelphia, Pa. 19137		12. REPORT DATE April, 1973 13. NUMBER OF PAGES ~~118~~ 112
14. MONITORING AGENCY NAME & ADDRESS (if different from Controlling Office)		15. SECURITY CLASS. (of this report) Unclassified 15a. DECLASSIFICATION/DOWNGRADING SCHEDULE

16. DISTRIBUTION STATEMENT (of this Report)

This document has been approved for public release and sale; its distribution is unlimited.

17. DISTRIBUTION STATEMENT (of the abstract entered in Block 20, if different from Report)

18. SUPPLEMENTARY NOTES

19. KEY WORDS (Continue on reverse side if necessary and identify by block number)

Artillery	Inspection	Shells
Brittle fracture	Machinability	Steel
Flaws	Powder Metallurgy	Stress Analysis
Fragmentation	Producibility	

20. ABSTRACT (Continue on reverse side if necessary and identify by block number)

A review of problems that might arise in converting to HF-1 steel for shell production led to the conclusion that such difficulties as might be encountered in steel production or in manufacturing would not be of a nature as to impede use of the new steel. Recommendations to expedite the conversion are made.

DD FORM 1 JAN 73 1473 EDITION OF 1 NOV 65 IS OBSOLETE

Unclassified
SECURITY CLASSIFICATION OF THIS PAGE (When Data Entered)

Unclassified
SECURITY CLASSIFICATION OF THIS PAGE(When Data Entered)

Attention is called to the need for more stringent inspection, which follows from the greater flaw sensitivity of HF-1. The need for data to assess the critical flaw size of quenched-and-tempered HF-1 is emphasized.

Unclassified
SECURITY CLASSIFICATION OF THIS PAGE(When Data Entered)

NATIONAL ACADEMY OF SCIENCES - NATIONAL RESEARCH COUNCIL

NATIONAL MATERIALS ADVISORY BOARD

AD HOC COMMITTEE ON SHELL STEEL

Chairman: Mr. Peter C. Rossin
President
Dynamet, Inc.
195 Museum Road
Washington, Pa. 15301

Members

Mr. W. William Dyrkacz
Consultant
Lochaven Park - Road 1318
Waxhaw, N. C. 28173

Mr. David C. Goldberg
Manager, Materials Department
Astronuclear Laboratory
Westinghouse Electric Corporation
P. O. Box 10864
Pittsburgh, Pa. 15236

Prof. Fritz V. Lenel
School of Engineering
Rensselaer Polytechnic Institute
Troy, N.Y. 12181

Dr. Robert P. O'Shea
Manager, Ordnance Materials
Research
IIT Research Institute
10 W 35th Street
Chicago, Il. 60616

Dr. Edward J. Ripling
President
Materials Research Laboratory, Inc.
1 Science Road
Glenwood, Il. 60425

Prof. Harry C. Rogers
Department of Metallurgical
Engineering
Drexel University
32nd and Chestnut Streets
Philadelphia, Pa. 19104

Mr. Adolf O. Schaefer
Consulting Engineer
1351 Butler Pike
Blue Bell, Pa. 19422

Mr. Larry Shiller
Vice President, Engineering
Norris Industries
Vernon Div. - Military Products Gp.
5215 S. Boyle Avenue
Los Angeles, Ca. 90058

Mr. John A. Ulrich
Senior Vice President, Research
and Development Division
Chamberlain Manufacturing Corp.
E. 4 and Esther Streets
Waterloo, Ia. 50705

Mr. Norman Zlatin
Vice President
Metcut Research Associates, Inc.
3980 Rosslyn Drive
Cincinnati, Oh. 45209

NATIONAL ACADEMY OF SCIENCES - NATIONAL RESEARCH COUNCIL

NATIONAL MATERIALS ADVISORY BOARD

AD HOC COMMITTEE ON SHELL STEEL

Liaison Representatives

Department of Defense

Mr. Jerome Persh
Staff Specialist for Materials and Structures (Engineering Technology)
Office, Director of Defense Research and Engineering
Department of Defense
Washington, D.C. 20301

Department of the Army

Mr. Edward Lippi
U. S. Army Materiel Command
Attn: AMCRD-W
Washington, D.C. 20310

Mr. Richard A. Meinert
Attn: SMUFA-T3300
Frankford Arsenal
Philadelphia, Pa. 19137

Dr. Thomas E. Sullivan
Chief of Research and Development
Attn: DARD-ARP
Department of the Army
Washington, D.C. 20310

Department of the Navy

Mr. R. W. Lowry
Code EAD
Naval Weapons Laboratory
Dahlgren, Va. 22448

NMAB Staff Member

Dr. Joseph R. Lane
Staff Metallurgist
National Materials Advisory Board
National Research Council
NAS-NAE
2101 Constitution Avenue, N.W.
Washington, D.C. 20418

ABSTRACT

A review of problems that might arise in converting to HF-1 steel for shell production led to the conclusion that such difficulties as might be encountered in steel production or in manufacturing would not be of such a nature as to impede use of the new steel. Recommendations to expedite the conversion are made. Attention is called to the need for more stringent inspection, which follows from the greater flaw sensitivity of HF-1. The need for data to assess the critical flaw size of quenched-and-tempered HF-1 is emphasized.

CONTENTS

		Page
	INTRODUCTION.	1
I.	INFLUENCE OF SELECTED MATERIALS AND PROCESSING ON FRAGMENTATION	2
II.	BASIC METALS AND PROCESSES.	23
III.	FORMING AND FINISHING	34
IV.	HAZARDS AND SAFETY.	49
V.	CONCLUSIONS	61
VI.	RECOMMENDATIONS	63

APPENDIXES

1.	TYPICAL MELT PRACTICE FOR HF-1.	67
II.	MILITARY SPECIFICATION - Steel Alloy; Special Purpose for Ammunition Components (HF-1).	79
III.	MACHINING HF-1 STEEL.	83
IV.	PRODUCTION OF SHELL BY GRINDING EXTERNAL SURFACES	91
V.	ALTERNATE MANUFACTURING PROCESS FOR THE PRODUCTION OF WARHEADS.	93
VI.	HYDROSTATIC EXTRUSION FOR SHAPING ORDNANCE ITEMS.	103
VII.	PRODUCTION OF HIGH FRAGMENTING SHELLS BY POWDER METALLURGICAL TECHNIQUES.	105

Preceding page blank

INTRODUCTION

The purpose of the study described in this report was to review the proposed usage of HF-1 steel in high-explosive shell casings so as to anticipate problems that might develop in supply, manufacture, or service. While the committee attempted to take a broad view of the problem, it accepted the constraint of essentially examining only the HF-1 steel since it had neither the data nor the time to review the selection by the Army of this steel from a group of candidates. Specifically excluded from consideration by this committee are the military aspects of fragmenting behavior. The committee has assumed that Army studies of the lethality of various sizes of fragments adequately define the objective, and that HF-1 is a steel which performs, as a shell steel, in the intended manner. Chapter I covers the general topic of fragmenting steel and will provide background for the reader not versed in this subject.

The production of HF-1 steel, considering the raw material, processes, and facilities, is covered in Chapter II. Chapter III examines the manufacture of shells, indicating a few alternate processes. The topic "Hazards and Safety" constitutes Chapter IV. The hazard referred to is a greater propensity for brittle fracture (compared to conventional steel), leading to a discussion of the critical flaw size and the nondestructive inspection problem. The committee findings are summarized in Chapter V, "Conclusions" and Chapter VI, "Recommendations."

I. INFLUENCE OF SELECTED MATERIALS AND PROCESSING ON FRAGMENTATION

A. INTRODUCTION

Recently a large amount of work has been undertaken by various government agencies and private industry to develop materials that have specific fragmentation characteristics consistent with the other aspects of warhead design. Particular interest has centered on the development of materials which could be used for antipersonnel weapons. The purpose of this review is to briefly summarize these investigations and their utility for antipersonnel weapons, e.g., the majority of the fragments below 10 grains.

B. REVIEW OF MATERIALS DEVELOPMENT

The problem of controlling fragmentation can be simply stated as being one in which crack initiation and crack propagation are manipulated in a consistent and predictable manner when the material is subjected to the force generated by the detonation of high explosive. Consequently, the major efforts of the various investigators have been centered on materials which inherently have crack starters and/or preferred fracture paths. Included in these are the materials shown in Table I. Each of these materials have applicability for specific ordnance applications.

1. Pearlitic Malleable and Ductile Cast Iron

These materials have metallurgical structures which consist of graphite nodules or spheroids in a ferritic, pearlitic, or tempered martensite matrix as seen in Figure 1.

TABLE I

SUMMARY OF MATERIALS

Material	Typical Composition					
	C	Si	Mn	P	Cr	Mo
Pealitic Malleable	2.5	1.4	0.30	-	-	-
Ductile Cast Iron	3.6	2.3	0.60	-	-	-
AISI 06 Steel	1.4	1.1	0.90	-	0.20	0.25
AISI 52100 Steel	1.00	-	0.35	-	1.45	-
AISI 1095 Steel	0.95	-	0.50	-	-	-
AISI 1340 Steel	0.40	-	1.75	-	-	-
AISI 9260 Steel	0.60	2.0	0.85	-	-	-
PR2 Steel	0.45	3.0	1.50	-	-	-
HF1 Steel	1.10	1.00	1.80	-	-	-
Medium Carbon Phosphorus Steel No. 1	0.50	-	1.50	.04/.12	1.5	-
Medium Carbon Phosphorus Steel No. 2	0.25	-	0.80	.04/.16	0.70	-
Medium Carbon Phosphorus Steel No. 3	0.40	-	0.80	.04/.16	-	-
Medium Carbon Phosphorus Steel No. 4	0.50	-	1.80	.04/.16	-	-
Medium Carbon Phosphorus Steel No. 5	0.50	1.0	1.80	0.10	-	-

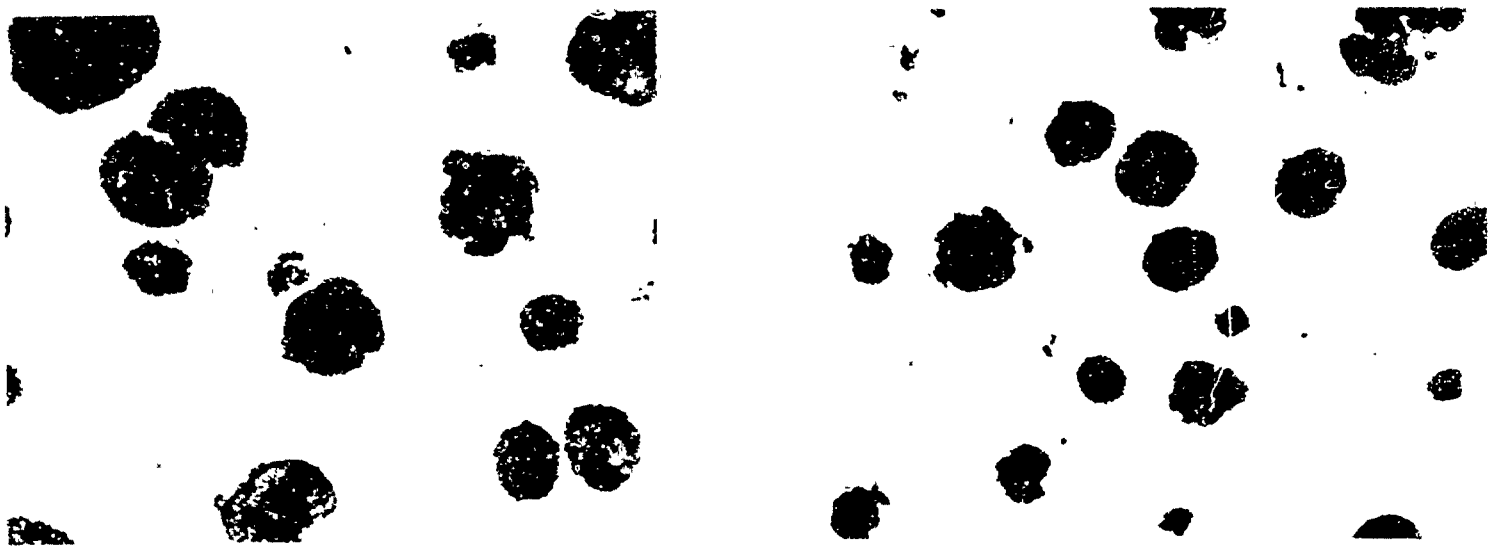

COARSE NODULED FINE NODULED

Figure 1 - Photomicrograph of Ferritic Ductile Cast Iron (250X).

Maximum ultimate tensile strengths of 100,000 psi are readily attainable in these materials, but ductility and toughness are limited at these strength levels. This restriction of mechanical properties has limited the utility of these materials to applications such as mortars and rocket warheads, where these properties can be accommodated. The important metallurgical features are the discrete graphite particles which act as crack initiators and a high-silicon matrix which facilitates crack propagation.

In general, the weight of the majority of the fragments emanating from the types of warheads previously discussed fall within 2-to 10-grain range when pearlitic malleable and ductile cast iron were considered.[1-9]

The work done has shown that even when wide ranges of composition, nodule size, matrix structure, and strength are encompassed, little change in fragmentation behavior of ductile cast iron can be obtained.[8,9] However, within these limits the following general trends were noted:

a. The ferritic matrix materials produced the largest fragments.

b. The tempered martensitic matrix materials produced fragments which were between those of the ferritic matrix and the pearlitic matrix material.

c. The pearlitic matrix materials produced the finest fragments.

d. In all cases, the finer the nodule size, the larger the fragments.

e. In the ferritic and martensitic studies, the lower carbon equivalent samples produced larger fragments.

f. In the pearlitic materials, the lower carbon equivalent samples produced finer or smaller fragments.

2. High-Carbon Steels

The high-carbon steels typified by 1095[10] and 52100[11-15] can be heat-treated to have the hypereutectoid carbides either as discrete particles or as a grain boundary network. Figure 2 typifies the carbide network structure. Certain studies[12,18] have indicated that the carbide network structure is desirable for producing small chunky fragments, while other investigators[14,15] have concluded that such a network is not required. Insofar as the 52100 steel is concerned, it is an expensive material and the development of the carbide network requires special heat-treatment procedures which could impose production limitations, and because of the high carbon and high chromium content, forging and machining operations are not without difficulty.[14] Similar difficulties are experienced with the 1095 steel. With both these steels, yield strengths ranging from 100,000 to 200,000 psi are attainable and in reporting fragmentation performance care must be taken to correlate the strength level and metallurgical structure of the material with the fragmentation behavior.

3. Medium Carbon-High Silicon Steels

PR2 and 9260 are medium carbon steels with high silicon contents. Silicon is a potent ferrite strengthener

Figure 2 - Photomicrograph Showing Proeutectoid Cementite Grain Boundary Network (1000X)

but reduces the fracture toughness of the steel.[31] Such steels respond to heat treatment and a wide range of strength levels are attainable. It is postulated[2] that to obtain fine fragmentation in these steels, cracks are initiated in the pearlite phase and because the silicon content is high, crack propagation is readily promoted throughout the general structure. To achieve this structure, it may be necessary to cool in a controlled manner from the austenitizing temperature, and yield strength levels which accrue from these treatments are 70 to 120 kpsi. The production of 9260 is well established; however, the production of PR2 steel may not be without difficulty. In order to obtain the 3 percent silicon content a reladling operation is required. Only a few steel making plants have the capability for the necessary reladling and an extra cost is incurred. Manufacture of warheads from PR2 by current manufacturing techniques may be somewhat difficult.

4. Medium Carbon-Manganese Steels

AISI 1340 is a medium carbon steel having manganese content in the range of 1.5-2.0%. It was originally developed in commercial use as a low cost steel having reasonably good hardenability. A range of metallurgical structures can be obtained in these steels depending upon the heat treatment applied to them. Similarly, yield strength levels from 60 to 180 ksi can be obtained. A processing technique for the 2.75-inch rocket warheads[3] and mortar rounds[16] develops a cold-worked stress-relieved ferritic matrix in which spheroids of carbide are dispersed. In this condition, yield strengths are typically 120,000 psi.

It can be hypothesized that the control of fragmentation in 1340, to produce fine fragments, is achieved because the manganese strengthens the ferrite and the cold work further exhausts the ductility. Both these factors markedly lowered fracture toughness. Consequently, the steel is highly susceptible to crack propagation. When this steel is utilized in hardened and tempered or annealed conditions, different than the one quoted, it behaves in a manner similar to any other steel of equivalent strength having the same structure and mechanical properties.

5. Medium Carbon-Phosphorus Steels

These steel alloys were developed and evaluated primarily for ordnance application.[2,8,9,17] The phosphorus addition is a potent ferrite strengthening agent and also enhances the temper brittleness phenomena if this is desired.[31] The amounts of other alloying elements employed in the steels were selected on hardenability criteria. A range of metallurgical structures can be obtained depending upon the heat treatment applied to them. Accordingly, yield strengths varying from 60 to 180 ksi can be obtained. A high degree of fragmentation control can be achieved over a wide range depending upon the phosphorus level and heat-treatment procedure.

The control of fragmentation in these steels is achieved by controlling the brittle failure mode of the warhead under explosive loading; phosphorus is extremely effective in this regard. Additionally, the inducement of temper brittleness markedly further reduces the fracture toughness, leading to the production of small fragments.[32]

Insofar as processing--including forging, cabbaging, hot cupping, machining--is concerned, only small quantities of these materials have been manufactured by quasi-production methods. In these instances no fabrication problems have been encountered.

6. High Carbon-High Silicon Steels

06[11-13] and HF-1[19-22] are high carbon-high silicon steels; however, there is a distinct difference in the metallurgical structures utilized for warheads. The 06 is heat-treated so that graphite spheroids are developed in a high silicon matrix as shown in Figure 3. The graphite nodules are crack starters and the high silicon matrix is susceptible to crack propagation. Depending upon the particular processing and heat treatment, the structure of the HF-1 may have the hypereutectoid carbides either as a grain boundary network, discrete spheroids, or a combination of both. It has been suggested[20] that the carbides provide the crack starters and propagation paths. These materials can be heat-treated to attain yield strengths up to 200 kpsi. In-process heat treatments and heat treatment of finished warheads to obtain the desired properties, structure, and fragmentation behavior may be rather sophisticated and consequently, some difficulties may be experienced in production.[23,24] Because of the high carbon and high silicon content, machining will be more difficult.[23] These materials will be more expensive than AISI 1050 and require special procedures in their manufacture.

7. Summary of Material Developments

To summarize the efforts conducted, the following general statements can be made:

Figure 3 - Photomicrograph Showing Graphite in AISI 06 Steel (100X)

a. Ductile and pearlitic malleable cast irons will produce the majority of fragments in the 2- to 10-grain category and are being utilized in applications where yield strengths in the range of 60 to 100 ksi are applicable and a cast shape is acceptable.

b. The high-carbon steels, typified by 52100, HF-1, and 06, are amenable to manipulation by heat treatment so as to produce a range of mechanical properties, structure, and fragmentation in behavior. Yield strength levels from 65 kpsi to 160 kpsi have been secured in warheads produced from these materials.

c. 9260 and PR2 are high-silicon medium carbon steels which can be heat-treated to produce good fragmentation. Both steels have yield strengths from 70 to 120 kpsi in this condition. They are classified as premium quality products and the PR2 particularly, may have a production limitation.

d. 1340 steel, being high-manganese, medium carbon, is a readily available material. However, to obtain optimum fragmentation it has been utilized in the spheroidized annealed, cold-worked and stress-relieved condition at yield strength levels of 130,000 psi.

e. High-phosphorus steels of medium carbon content are readily available. These alloys can provide a high degree of fragmentation control over yield strength levels varying from 60 to 180,000 psi.

C. EFFECTS OF PROPERTIES AND GEOMETRY ON FRAGMENTATION

As previously indicated, the fragmentation characteristics of a specific material are greatly dependent upon its metallurgical condition and the associated mechanical properties. Another variable which must be accommodated is the geometrical constraints, such as warhead diameter, C/M ratio (weight of explosive charge over the weight of metal casing), etc., of the relevant munition. An additional factor is the type of explosive which is employed (Table II).

Within any given material a variation in fragmentation can be obtained by controlling the structure and hence mechanical properties of that material. Figure 4 relates average fragment mass of all fragments weighing over 1 grain emanating from a 5-inch cylinder of one material in a specific metallurgical structure filled with a particular explosive at a fixed C/M ratio to mechanical properties.[13]

In some materials, it is possible to have the same tensile properties but different structures so that fragmentation properties are quite different. For example, it is possible to generate a carbide network in a number of hypereutectoid steels such as HF-1. Table III compares the number of fragments obtained from two 155-mm XM549 warheads made of HF-1 steel and filled with Comp B explosive.[19] From the two previous figures, the need for exact specifications of the material structure in relating fragmentation performance is apparent.

C/M ratio also has a direct effect on fragmentation.[13] Figure 5 relates average fragment mass to C/M ratio for a

TABLE II

EFFECT OF TYPE OF EXPLOSIVE ON FRAGMENTATION [25]

Material	Explosive	No. of Fragments
52100 GBA	9404	4776
"	CompB	3232
"	TNT	2021
"	Baratol	882
PR 2	CompB	4000
"	TNT	3050
"	Baratol	1529
1018	CompB	1959
"	Baratol	
52100 GB	CompB	3111
"	Baratol	1146
52100 Conv	CompB	2493

GBA - Grain Boundary Annealed Heat Treatment

GB - Grain Boundary Heat Treatment

Conv - Hardened and Tempered

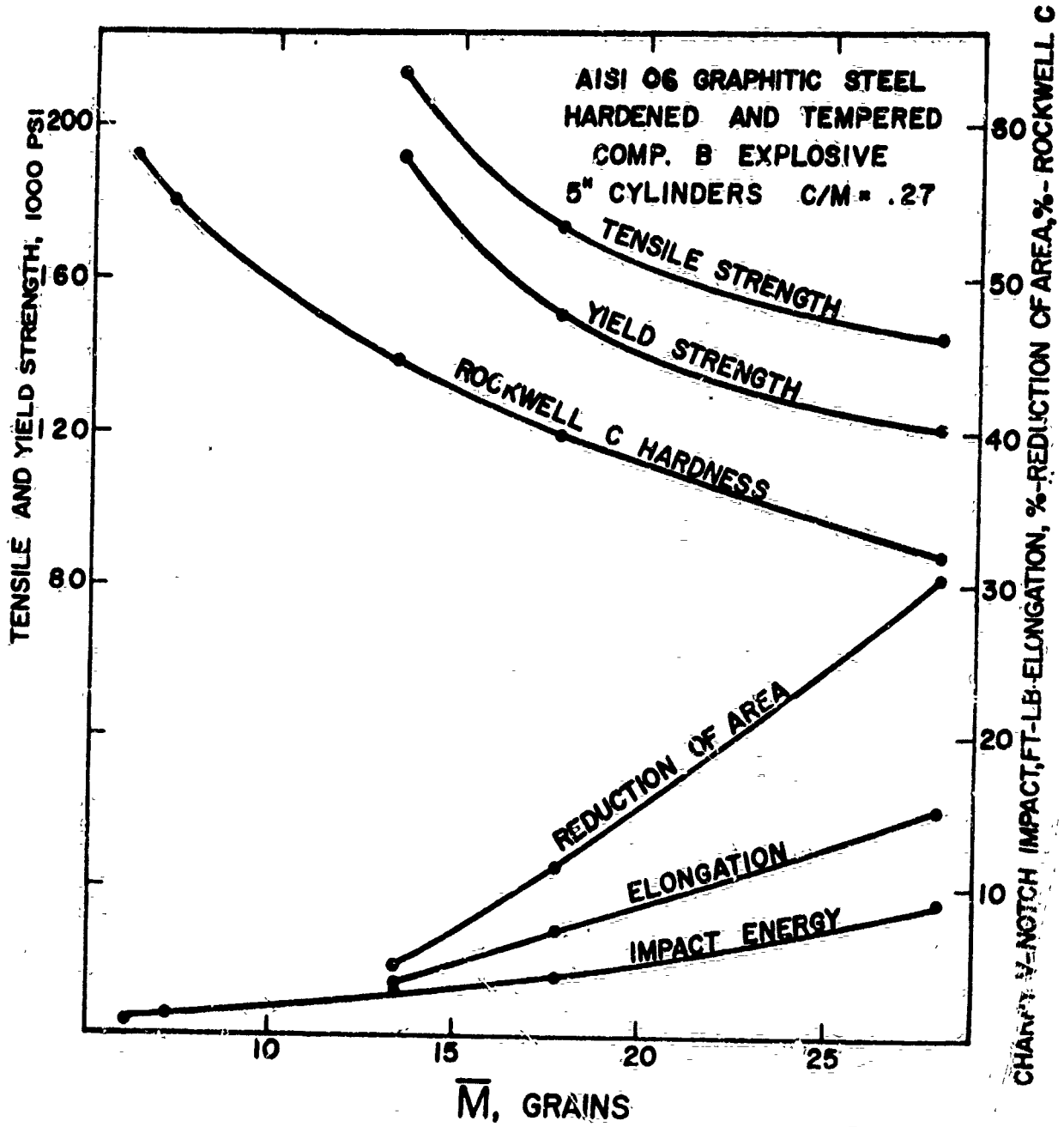

Figure 4 - Mechanical Properties vs. $\bar{M}$. [13]

TABLE III

NUMBER OF FRAGMENTS OBTAINED FROM 155mm XM549 WARHEAD FILLED WITH COMPOSITION B EXPLOSIVE AND MADE OF HF1 STEEL [19]

MATERIAL	YS, kpsi	HARDNESS R_C	ELONGATION, %	NUMBER OF FRAGMENTS
HF-1 (no carbide network)	145	38-40	5-10	28,280
HF-1 (carbide network)	147	39-40	6	49,968

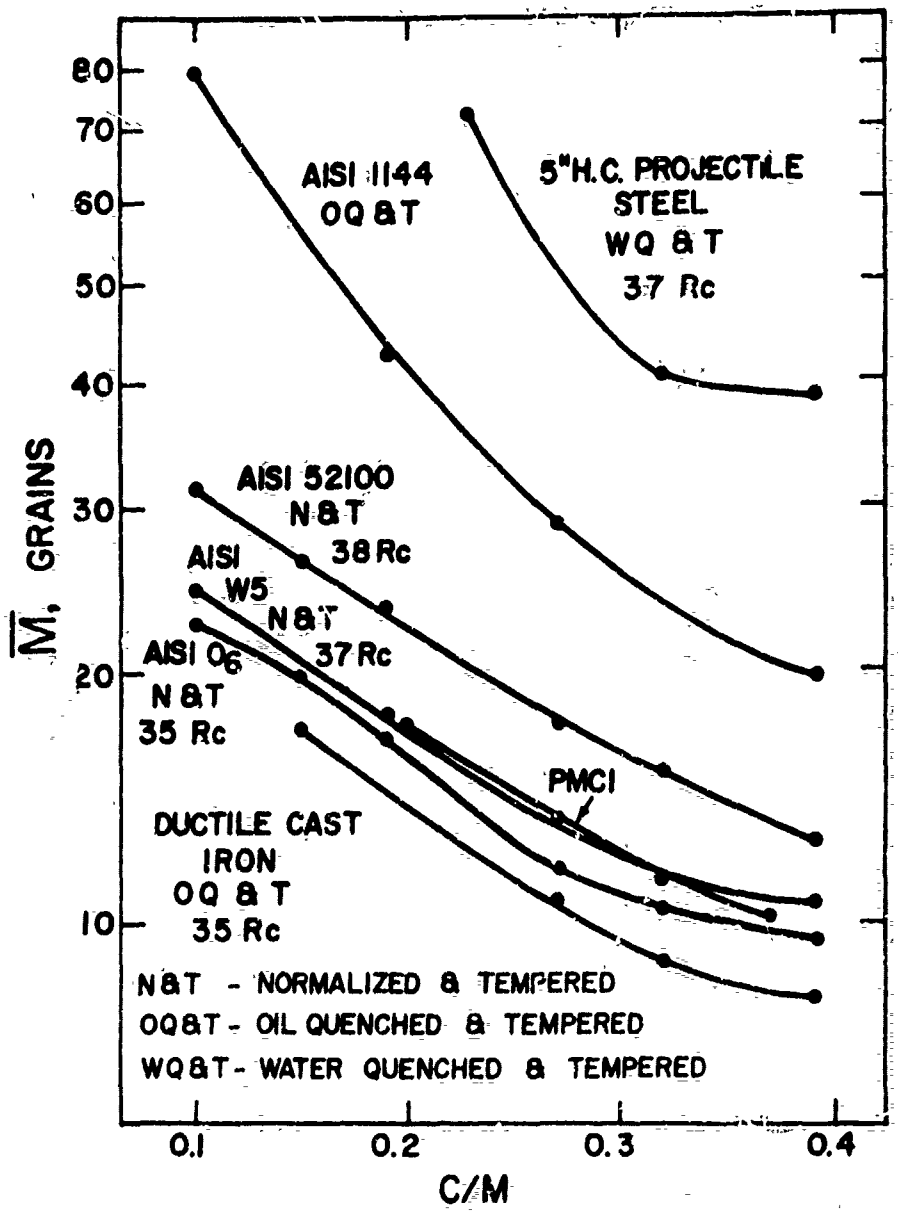

Figure 5 - Dependence of Average Fragment Mass on C/M Ratio for a 5-Inch Cylinder.[13]

variety of materials. It is apparent that as C/M ratio increases a finer fragmentation is achieved.

Other metallurgical factors which can influence the fragmentation characteristics of an alloy are the prior austenitic grain size and inducement of an embrittlement of the structure in the finished warheads. The effects of these types of metallurgical manipulations on fragmentation are given in References 8, 9, and 17.

D. SPECIFIC CONSIDERATIONS ON THE USE OF HF-1 STEEL FOR WARHEADS

The preceeding review of material development and the interrelated effects of material and explosive properties and geometry on fragmentation indicates the many alternatives available to the warhead designer for controlling fragmentation. The Army has conducted extensive tests on HF-1 steel and reported that in the coarse pearlitic condition (yield strength approximately 70 kpsi) HF-1 steel provides increased lethality to personnel. Warheads made from HF-1 can be expected to be more expensive than previosly, for a variety of reasons, including production under an alloy schedule, need for controlled billet cooling, possible need for prolonged spheriodization heat treatments, closer forging temperature control, the increased tonnage required in forming the warhead, and poorer machinability than that of current warheads in medium carbon steels. However, the Army has reported that because of the increased lethality, warheads in HF-1 are cost effective for antipersonnel applications.

It became apparent during discussions regarding Army plans that the use of HF-1 for certain shells which required much higher yield strength was contemplated. To achieve the desired yield strength, a quench-and-temper heat treatment would be employed in place of the isothermal embrittling treatment. Data from studies at Watertown Arsenal and the Naval Weapons Laboratory[26,27] indicate that fragmentation is less effective than that resulting from the isothermal treatment, resembling instead that from quenched-and-tempered SAE 9260 steel. Since the cost of buying and processing the SAE steel would be expected to be lower, the selection of HF-1 for this class of applications appears to warrant review. The committee was not in possession of sufficient data to reach a positive judgment of the matter.

REFERENCES

1. K. D. Holmes and E. L. Wyatt, "Program for Improvement of Cast Materials for 60mm and 81mm Shell Bodies," Triservice Fragmentation Seminar, AMMRC, Watertown, Mass., 8 October 1968.

2. P. V. Riffin, "Metallurgical Studies of Wrought Alloys," Triservice Fragmentation Seminar, AMMRC, Watertown, Mass., 8 October 1968.

3. S. Waxman, "Metallurgical Investigation for Improved Shell Fragmentation, 2.75 inch Rocket Warhead Material," Triservice Fragmentation Seminar, AMMRC, Watertown, Mass., 8 October 1968.

4. A. Williams, "81mm, HF, Lethality Studies," Triservice Fragmentation Seminar, AMMRC, Watertown, Mass., 8 October 1968.

5. E. A. Krajkowski, "Evaluation of Various Grades of Nodular Graphitic Iron for the 2.75-Inch M151 Rocket Warhead," Picatinny Arsenal, Tech. Report 3442, Dover, New Jersey, April 1966. (Conf.)

6. E. N. Kinos, "Development of Alternate Cast Fragmentation Materials for the 2.75-Inch M151 Rocket Warhead," AMMRC Report TR 66-32, Watertown, Mass., October 1966. (Conf.)

7. J. W. Moseley, "A Study to Assess the Lethality of Pearlitic Malleable Cast Iron Versus Forge Steel as a Fragmenting Medium," U.S. Naval Weapon Lab., Tech. Memorandum T-23/64, Dahlgren, Va., October 1964. (Conf.)

8. R. P. O'Shea, H. N. Nagooka, and T. Watmough, "Development of Naturally Fragmenting Materials," Air Force Armament Lab. Tech. Report TR-68-85, Eglin Air Force Base, Florida, July 1968. (Conf.)

9. R. P. O'Shea, J. C. Dahn, and T. Watmough, "Development of Naturally Fragmenting Materials," Air Force Armament Lab. Tech. Report TR-70-8, Eglin Air Force Base, Florida, January 1970. (Conf.)

10. R. L. Benner, "Recent Advances in High Fragmenting Steels," Picatinny Arsenal Tech. Report 3833, Dover, New Jersey, December 1968.

11. S. F. Magis, "Material Selection for Naturally Fragmenting Munitions," NWL Tech. Report T 1/65, Dahlgren, Virginia, January 1965. (Conf.)

REFERENCES (cont.)

12. S. F. Magis, "Material Selection for Naturally Fragmenting Munitions," NWL Tech. Report T-24/65, Dahlgren, Virginia, September 1965. (Conf.)

13. S. F. Magis, "Material Selection for Naturally Fragmenting Munitions," NWL Tech. Report T-13/67, Dahlgren, Virginia, September 1967. (Conf.)

14. R. B. Toenjes and R. A. Root, "Development of Improved Fragmenting Ordnance," Air Force Armament Lab. Tech. Report TR-66-6, Eglin Air Force Base, Florida, February 1966. (Conf.)

15. E. Dougherty, "152mm XM409 Projectile Status Report," Triservice Fragmentation Seminar, AMMRC, Watertown, Mass., 8 October 1968.

16. C. Sallade, "81mm M347 Projectile, 1340 Hot Cup-Cold Draw Stress Relief," Triservice Fragmentation Seminar, AMMRC, Watertown, Mass., 8 October 1968.

17. R. P. O'Shea and T. Watmough, "Fragmentation Weapons," Air Force Armament Lab. Tech. Report TR-72-51, Eglin Air Force Base, Florida, March 1972. (Conf.)

18. E. N. Clark, "Abstract of Fragmentation of 52100," Triservice Fragmentation Seminar, AMMRC, Watertown, Mass., 8 October 1968.

19. D. J. Sutton, "Metallurgical Investigation for Improved Shell Fragmentation, XM549 155mm Hi-Frag. Program," Triservice Fragmentation Seminar, AMMRC, Watertown, Mass., 8 October 1968.

20. J. C. Beetle, "A Fractographic Investigation of Silicon-Manganese Steel Fragments by Scanning Electron Microscopy," Proc. Fragmentation Technology Seminar, Picatinny Arsenal, Dover, New Jersey, 27 and 28 October 1970.

21. B. P. Bandes, "Mechanism of Fragmentation of Silico-Manganese Steel," Triservice Fragmentation Seminar, AMMRC, Watertown, Mass., 8 October 1968.

22. R. Meinert, "105mm M1E2 Status Report," Triservice Fragmentation Seminar, AMMRC, Watertown, Mass., 8 October 1968.

23. "155mm HEM-107 Projectile, Contract DAAA-09-70-C-0069 Pilot Production Run High Fragmentation Steel," Engineering Report and Narrative, Donovan Construction Company, New Brighton, Minnesota 55112, June 30, 1971.

REFERENCES (cont.)

24. "Steelmaking, Conversion and Shell Manufacturing Practices for HF-1 Steel," Contract No. DAAA-09-72-C-0205, Homer Research Lab., Bethlehem Steel Corp., Bethlehem, Pa.

25. E. N. Clark, "Fragmentation Mechanism in Cylinders," Proc. Fragmentation Technology Seminar, Picatinny Arsenal, Dover, New Jersey, 27 and 28 October 1970.

26. F. J. Rizzitano, "Comparison of Candidate Fragmentation Materials", Army Materials and Mechanics Research Center Report PL-68-14, Watertown, Mass., June 1968.

27. R. W. Lowry, "Evaluation and Selection of Alternate Steels for the Improved 5 In./54 Projectile Body", NWL Report No. TR-2585, Dalhgren, Va., July 1971.

28. I. C. Nathan, "Engineering Test Report on HF-1 Projectiles," Contract DAAA-09-71-C-0267, November 1971.

29. "Steelmaking, Conversion, and Shell Manufacturing Practices for HF-1 Steels", Homer Research Laboratory, Bethlehem Steel Corporation, Bethlehem, Pennsylvania.

30. "155mm HE M-107 Projectile Pilot Production-High Fragmentation Steel", Donovan Construction Co., New Brighton, Minnesota, June 1971.

31. Metals Handbook, Vol. 1 (8th ed.), p. 228.

32. Ibid, p.232.

II. BASIC METALS AND PROCESSES

During the last decade, the Army Munitions Command evaluated commercial and new compositions to select the most cost-effective high fragmentation shell steel. This program included detailed study of AISI 9260, 52100, and 1340, PR-2, HF-1 steels in various conditions. The possibility of using powder metallurgy techniques was also considered. Table IV gives the nominal composition of the steel investigated. Used as criteria in this evaluation were the following factors:

- Non-criticality of materials
- Fragmentation behavior
- Availability
- Producibility
- Machinability
- Cost
- Effectiveness

From these studies, the U. S. Army Munitions Command has concluded that the most significant improvement in fragmentation and lethality per dollar in antipersonnel applications will be derived from the HF-1 steel. This report will not attempt to re-evaluate the Munitions Command's decision but will focus in this chapter on the following aspects:

- Development history
- Producibility

TABLE IV - COMPOSITION RANGES OF CANDIDATE FRAGMENTING STEEL

	GRADE				
	AISI 9260* (%)	AISI 1340* (%)	PR-2* (%)	HF-1** (%)	AISI 52100* (%)
Si	1.80-2.20	0.20-0.35	3.00	0.70-1.10	0.20-0.35
C	0.55-0.65	0.38-0.43	0.45	1.00-1.15	0.95-1.10
Mn	0.65-1.00	1.60-1.90	1.50	1.70-2.10	0.25-0.45
S***	0.04	0.04	0.04	0.04	0.025
P***	0.04	0.04	0.04	0.035	0.025
Cr	----	----	----	----	1.30-1.60

* Some users further restrict permissible ranges of some elements, i.e., 0.75-1.00 Mn in 9260 rather than 0.65-1.00%.

** Based on proposed MilSpec.

*** Maximum.

- Availability
- Specification
- Economics

A. DEVELOPMENT HISTORY

The development of a steel which would have suitable ordnance fragmentation characteristics and which would meet the criteria of:

1. Improved lethality against personnel.
2. Limited or nil usage of strategic materials.
3. Not requiring a lengthy nor critical heat treatment, and
4. Having requisite mechanical properties, i.e., 110 ksi yield strength in 1-in. thickness.

was achieved by the Bethlehem Steel Corporation. This steel has been designated as HF-1 with the following nominal composition:

C	Mn	P	S	Si	Al
1.05	1.80	0.020	0.035	0.80	*

The development history of HF-1 is well documented in references 1 and 2. Briefly, Bethlehem started with air-induction-melted 6 1/2-in. square x 21-in. ingots of five alloys[1] the compositions of which are listed in Table V. Heat M1 was designed to provide a carbide network. Heat M2 was similar to M1 except that it was rephosphorized to aid fragmentation and, as a side effect, to give improved machinability. Heat M3 was a relatively low-carbon graphitic steel with nickel, boron, and silicon added as graphitizers. Heat M5 was a high-carbon graphitic grade free of strong carbide-forming elements, and heat M6 was made to determine

* No intentional addition.

TABLE V - COMPOSITIONS OF THE LABORATORY HEATS STUDIED

Code	C	Mn	P	S	Si	Ni	Al	B	Pb
M1	1.06	2.15	0.019	0.024	1.02	0.02	0.033		
M2	1.08	2.08	0.16	0.025	1.01	0.02	0.031		
M3	1.20	0.68	0.021	0.025	2.16	1.10	0.023	0.002	
M3R*	1.20	0.69	0.022	0.021	2.18	1.13	0.023	0.002	
M5	1.56	1.73	0.02	0.027	1.46	0.02	0.021		
M6	1.05	1.95	0.018	0.027	0.93	0.02	0.013		0.12
M6R*	1.10	2.09	0.016	0.019	1.01	0.02	0.004		0.13

*Repeat heats made to provide additional material

the effect of a lead addition on fragmentation. Forged tubes were made from each of these alloys and subsequently evaluated at Picatinny Arsenal and Stevens Institute of Technology.

Because of the satisfactory fragmentation behavior of Heats M1 and M2, one 25-ton electric furnace heat of each was made using a single slag to duplicate open hearth practice. Compositions M3 and M5, the graphitic grades, developed longitudinal planes of weakness along the elongated graphitic particles resulting in undesirable sliver-like fragments. Composition M6 offered no fragmentation improvement over the chemically similar M1 steel, thus not justifying the increased cost. M2, the rephosphorized grade, when scaled up, was found to be excessively brittle. The remaining 25-ton heat, M1, was coded as HF-1, which is its current identification.

Evaluation of this 25-ton heat included:

1. Heat treatment and mechanical property studies
2. Workability
3. Full-size fragmentation tests
4. Machinability tests

The results from these tests showed that HF-1 did indeed meet the criteria as originally established. If high yield strength (above 110 ksi) is needed, a quench and temper treatment is required.

B. PRODUCIBILITY

Further producibility tests were then conducted by Picatinny Arsenal using the product of a 100-ton open hearth heat from the Bethlehem plant and by Norris Industries using the product of five 75-ton heats supplied from Bethlehem's Los Angeles plant. Electric practice was used because

of unavailability of open hearth facilities at the Los Angeles plant. These heats were made with a single slag practice rather than the double slag typically employed in the electric furnace so as to approximate open hearth or BOF practice. Norris also evaluated two 50-ton electric furnace melts from the Bethlehem plant.

Table VI lists all the heats made by Bethlehem. It should be noted that of the 17 production-type heats, two were made using open hearth practice at Bethlehem (170-ton) and Lackawanna (200-ton), while the remaining were electric melts from the Bethlehem and Los Angeles facilities of Bethlehem Steel. Typical melt practice is described in Appendix I. No unusual techniques were employed except that any aluminum addition was forbidden. Three of the electric furnace heats made at Bethlehem-Los Angeles did have an aluminum addition made in error while two were made with no Al addition. The addition of aluminum resulted in severe pitting during pickling, causing a high rejection rate. However, the shell forgings did pass the hydrostatic test.

Bethlehem Steel lists in its patent the composition range permitted for HF-1 as:

C	Mn	P
1.00	1.60	———
1.20	2.30	0.035 max.
(1.02-1.13)	(1.66-2.06)	(.009-.020)

S	Si	Al
———	0.50	No
0.040 max.	1.10	addition
(.009-.029)	(0.55-1.04)	(.005-.075)

and maximum residuals as:

Cu	Ni	Cr	Mo	Sn
0.35 max.	0.25 max.	0.20 max.	0.06 max.	---
(0.02-0.11)	(0.02-0.17)	(0.04-0.10)	(0.01-0.04)	(0.006-0.01)

The ranges explored in the 17 heats (noted in Table VI) made by Bethlehem are indicated by the numbers in parentheses as noted above.

Republic Steel Corporation had indicated plans to make a 200-ton electric furnace melt during late 1972 using melt practices similar to those described in Appendix I.

C. AVAILABILITY

HF-1 contains no alloying elements that are currently strategic unless manganese is so considered. One concern, possibly strategic in nature, is a general industry problem regarding an overall availability of quality scrap metal of suitable form to support electric furnace or BOF melting practice. An assessment of this as a potential problem was not attempted.

From a review of the recommended melting and allied processing steps required to produce HF-1 in large quantities, two potential facility problem areas have been identified:

1. Since the industry trend for steel melting practice is the use of the BOF, it is vital to develop a BOF practice for HF-1. Only limited experience, a single 200-ton HF-1 heat using BOF (using no scrap charge), now exists and there is some controversy as to the suitability of BOF to high C steels. Specifically,

TABLE VI - ANALYSIS OF SPECIFIC HEATS OF FRAGMENTING STEELS MADE AT BETHLEHEM STEEL CO.

Plant	Type	Size	Heat No.	C	Mn	P	S	Si	Ni	Cr	Mo	Cu	Sn	Al
Beth.	Elect.	25 T	121W221	1.04	1.78	0.010	0.012	0.72	0.03	0.04	0.02	0.04	0.01	--
"	"	50 T	122E180	1.06	1.70	0.011	0.011	0.55	0.06	0.10	0.03	0.06	0.01	0.005
"	"	"	125H542	1.04	1.76	0.010	0.012	0.70	0.07	0.06	0.03	0.06	0.01	0.005
"	"	"	124H595	1.10	1.77	0.012	0.014	0.73	0.08	0.05	0.04	0.05	0.01	0.005
"	"	"	125E261	1.06	1.88	0.016	0.019	0.85	0.08	0.10	0.04	0.04	--	0.005
"	"	"	122H154	1.12	1.94	0.012	0.016	0.84	0.05	0.07	0.02	0.06	--	0.005
"	"	"	124Y214	1.05	1.76	0.012	0.010	0.87	0.17	0.06	0.02	--	--	0.006
"	"	"	125Y337	1.05	1.66	0.013	0.011	0.68	0.06	0.06	0.02	0.06	--	0.010
"	"	"	125YA651	1.02	1.92	0.009	0.009	0.72	0.06	0.09	0.03	0.05	--	0.005
"	"	25 T	121N278	1.10	1.78	0.009	0.014	0.83	0.06	0.04	0.01	0.11	--	0.010
"	O.H.	170 T	140T210	1.07	1.80	0.010	0.020	1.04	0.05	0.09	0.01	0.05	--	0.006
Lack.	O.H.	200 T	523C0325	1.12	1.75	0.014	0.027	0.86	0.03	0.06	0.005	0.02	--	0.005
L.A.	Elect.	75 T	1T179	1.11	1.92	0.015	0.023	0.75	0.06	0.09	0.010	0.09	0.008	0.052
"	"	"	2V924	1.13	1.95	0.020	0.022	0.84	0.07	0.09	0.012	0.10	0.010	0.053
"	"	"	2V966	1.10	1.98	0.014	0.023	0.98	0.05	0.08	0.014	0.08	0.006	0.075
"	"	"	1W415	1.06	1.88	0.019	0.029	0.87	0.04	0.06	0.012	0.09	0.006	0.007
"	"	"	1B945	1.10	2.06	0.015	0.020	0.90	0.05	0.08	0.005	0.10	0.007	--
Target				1.05	1.80	0.020	0.035	0.80	0.25	0.20	0.06	0.35	--	--
Range				1.00	1.60			0.50						
				1.20	2.30	0.035	0.040	1.10						

there is concern that during reladling a significant temperature drop would occur. Bethlehem, however, reports experiencing a minor 40°F drop during their BOF melt.

2. The high hardenability of HF-1 introduces the other potential problem area regarding facilities. Slow cooling is required to minimize thermal cracking and flaking, as is customary with steels containing high carbon levels. To accommodate this requirement, adequate provisions have to be made for furnaces or insulated railroad cars. Consideration should also be given to the use of vacuum degassing as a means of minimizing flaking.

D. SPECIFICATION

It is noted that composition in Table I of this specification (Appendix II) is tighter than the recommended range by the developer of the steel as well as tighter than the actual analysis regarding silicon in the 17 heats produced to date.

Since the committee has not been able to show a correlation of chemistry within the range produced to date with any of the critical criteria, (i.e., fragmentation, producibility, machinability, etc.), a careful assessment should be made to have a specification that is totally cost-effective from the standpoint of facilities, scrap rate, future processing, and final product acceptance.

E. ECONOMICS

Since HF-1 is considered an alloy steel, by definition, certain attendant base costs will exist with this material. Reduction in the price per pound of material can be expected, at this time, to come only from savings in processing. Since it is a relatively new steel, savings should be achievable by optimizing melt practice (BOF vs BOH vs EF), strand casting, and cool-down cycle (bung furnaces vs insulated car).

F. RECOMMENDATIONS

It is recommended that:

1. Additional laboratory-size heats be made to explore sensitivity of fragmentation and processing into finished projectiles to residuals in the steel beyond the range recommended in the specifications. This could be important during mobilization when available scrap used in making steel might introduce tramp elements not normally encountered.

2. Basic oxygen furnace (BOF) heats should be made and processed, and a melt practice utilizing normal charge materials should be developed for the HF-1 high carbon-high silicon analysis. In particular, the question of what the chill factor is on reladling should be answered. A recent BOF heat indicates a drop of only 40°F; if this is indeed the case, this will not be a problem.

3. A preliminary specification should be circulated to the steel industry to obtain and integrate all comments prior to issuance by the Army.

4. Vacuum degassing (and thus elimination of hydrogen) should be evaluated as a means of reducing a propensity for cracking due to flaking and the effect this has on costs.

REFERENCES

1. "Development of Bethlehem HF-1 High Fragmentation Shell Steel," Homer Research Laboratory, Bethlehem Steel Corporation, Bethlehem, Pa.

2. "Steelmaking, Conversion, and Shell Manufacturing Practices for HF-1 Steel," Homer Research Laboratory, Bethlehem Steel Corporation. (This TDP was delivered to the Government by Bethlehem Steel Corporation for utilization in the competitive procurement of high fragmentation steel under the terms of contract No. DAAA-09-72-C-0205, entitled "Technical Data Rights and Patent License Agreement.")

III. FORMING AND FINISHING

A. INTRODUCTION

The extensive documentation of the Army's research and development on shell production was surveyed. Included in this chapter are those aspects of manufacture subsequent to the receipt of the steel in bar stock form from the steel producer. This includes everything after the initial billet production to the final finished shape of the shell. Although cost was not ignored, technological problems have been given top priority.

In the review and recommendations relating to effects of possible adoption of HF-1 as the primary fragmenting shell steel, the following factors were considered:

- Changes in production, heat-treating, or machining facilities that might be required.
- Potential problems at mobilization production rates.
- Impact on potentially scarce materials or equipment.
- Economic factors involved in changes in production techniques or facilities.
- Changes in manufacturing procedures necessitated by the increased flaw-sensitivity of the HF-1 steel.

The text of a presentation made before this committee on July 11, 1972 by Lt. Colonel J. N. Halvatgis[1] succinctly summarizes the current assessment by the Army Munitions Command of the various aspects of the overall problem of adopting HF-1 as the primary fragmenting munition material, and formed the major base for this review. Information and statements in other documents supplied to the committee will be discussed also as pertinent.

B. PROGRAM EVALUATION - General

The basis of evaluation was:

1. Prior production experience of committee members.
2. Results of test quantities of shell produced from this material.[1-7]

It was also assumed that measured fracture toughness values for HF-1, based on the limited data obtained to date, are confirmed by additional evaluations. Since these values are substantially lower under comparable conditions than those of the lower carbon steels currently utilized, this steel will have increased flaw sensitivity at all stages of manufacture and handling. On the basis of currently available information, we unanimously agree that with increased care in manufacturing and finishing, there are no insurmountable or major production or finishing problems associated with the introduction of HF-1 shell steel. If further study shows that the currently established toughness values must be revised either upward or downward, then the magnitude of the potential problems will be either reduced or enhanced as a result.

The committee does foresee a number of phases of production and finishing that will be changed by the use of this new material. In many of these, the magnitude of the problems that may arise from these required changes cannot be estimated very accurately because of both the limited quantity of the basic steel produced and the small number of shells manufactured to date. The problems can be accurately assessed only through the production of large quantities under normal production conditions. Another factor that must be borne in mind continuously is the basis for comparison of problems involved in the use of HF-1 steel. For the new thin-walled rounds, HF-1 would be used in the quenched and tempered condition because of the increased strength requirement, and must be compared problem-wise with other materials at the same strength level. Thus, the introduction of the thin-walled design will cause problems independent of what material is used as the standard. Consideration is limited, therefore, to the more conventional 105-mm and 155-mm rounds in which the steel will be utilized in the isothermally-held (embrittled) condition with a yield stress in the 75-ksi range.

1. Billet Separation: Following the production process downstream, the first and one of the major items of concern with respect to the suggested manufacturing procedure is with the method of billet separation. The "recommended" procedure[1] is the conventional nick and break method. It should be remembered, however, that the surface produced by billet separation becomes the inner surface of the pierced and drawn shell cavity after these operations. This area

is difficult to examine for flaws and a place where flaws are likely to occur, thus becoming a major factor in shell rejection by onstream quality control. During the nick and break operation, a high-speed brittle crack is propagated across the bar. Depending on the conditions, this may lead to crack bifurcation, causing a ragged appearance and occasional cracks of moderate length below the main fracture surface.

In view of the considerably lower fracture toughness of the HF-1 steel compared with that of the previously used shell steels,[2] it is desirable to make every effort to present a square, flat, defect-free surface to the piercing tool. In addition to providing an improved inner shell wall surface, a smooth flat billet end should improve concentricity and minimize rejection for off-center piercing, and also rejection from inadequate billet volume for the deformation processing operations. The nick and break method is subject to variability both in the ambient temperature at which the breaking is taking place and the reproducibility of nicking by an often unskilled or semi-skilled worker. Even though the less tough HF-1 produces, in general, a better fracture surface in the nick and break method than most of the currently used shell steels, an even better surface is preferred for the above reasons. Other methods of billet separation that would produce a more desirable surface, such as hot-shearing, sawing, or the use of high-speed abrasive cut-off wheels, should be thoroughly investigated from all points of view. The surface produced by the abrasive cut-off wheel is probably superior to the others.

2. Billet Heating: Billet heating prior to forging presents a greater problem with HF-1 than with conventional steels in that a temperature of 2150°F cannot be exceeded without damaging or "burning" the steel.[1-3] This means that improved temperature control must be instituted and maintained in the billet-heating furnace. This may be difficult on some of the existing furnaces. Thus, the recommended forging temperature is 2100°F, 150°F below the temperature used for forging AISI 1050 steel. Because of a higher flow stress at the lower temperature, an increase in press tonnage of approximately 25% is noted,[1] causing increasing tool wear and increasing scrap rate.[2] This restriction may well lead shell manufacturers to push their billet heating temperatures as close to the upper limit as possible. Improved temperature control would then be required, which may not be possible on some of the existing equipment. On the other hand, an overcautious operator or manufacturer may aim for a furnace temperature below 2100°F, compounding the problems of increased press tonnages. The amount of increased tool wear and scrap may not be excessive but again, the exact amount can only be determined after a good manufacturing practice has been established through production of shells.

3. Spheroidization and Rough-Turn Operation: A major concern in the utilization of HF-1 is the potential hot-forge aspect of the requirement for heat treatment (spheroidizing anneal) after forging and prior to the rough-turn operation. In reference 1 it is assumed that this treatment is required, based on a limited amount of previous production experience and comparative machinability evaluation.[4-9] The spheroidiza-

tion heat treatment takes seven hours[4] to eleven hours.[5] Reference 1 assumes that a seven-hour spheroidization will be sufficient. Spheroidization is utilized to improve machinability, since the as-forged HF-1 has a machinability of one half or less that of forged 1050 steel.[10] The problems with respect to the requirement of a spheroidization heat treatment are:

a. Capital equipment costs either for new plants or for the large fraction of the existing plants that do not have adequate facilities on hand for this additional heat-treating step.

b. Space requirements at some existing plants.

c. Additional time and cost of production.

These factors are countered by possible reduced machining rates in rough-turning and increased tool wear if spheroidization is eliminated. The opinion of the committee is that the machinability studies to date have been insufficient and inadequate to permit this determination to be made with any degree of confidence. What is required is a comprehensive study of the optimum materials and conditions for machining the HF-1 shells at the rough turn stage without a prior spheroidization treatment. Detailed discussion of several aspects of this problem are given in Appendix III. An optimistic assessment, however, is that machining methods can be found that will obviate the need for a spheroidization anneal. To this end, it will be recommended that a more substantial, comprehensive machinability study of HF-1 in the harder, as-forged, conditions be carried out separate from the pressure of shell production. Preferably, this would be carried out <u>prior</u> to

a limited developmental shell manufacturing program. If this is not feasible, however, it could be carried out simultaneously and the results coordinated with concurrent production experience. This improved tooling should achieve machining rates on unspheroidized forgings that are acceptable to shell manufacturing facilities.

4. Nosing: The committee concurs, in general, with the recommended hot-nosing procedure for the HF-1 shell in light of the accumulated evidence of cracking problems encountered in attempts at cold-nosing this material. It should be noted, however, that at least two producers have successfully performed cold-working operations on properly spheroidized forgings. Ironing operations that reduce the wall thickness, as well as nosing operations, have been performed cold with good success with reductions in excess of 25 percent. Appropriate cold-working operations have the advantage of producing improved surface finishes, dimensional tolerance control, and weight control. These factors can be important to the successful production of some of the newer types of thin-walled projectiles.

5. Finish Turn, Thread: The discussion of machining and machinability in the above section on the rough-turn operation and in Appendix III is also pertinent here. The major difference is that, with the use of HF-1 steel, the alternative of a spheroidizing heat treatment cannot be considered here and improved machining techniques must be adopted.

6. Cover Plate Welding: The welding of cover plates may present a problem. With a material having the increased flaw sensitivity of HF-1, residual stresses leading to possible cracking should be kept in mind as a potential problem area.

7. Summary: Summarizing briefly the evaluation of the proposed manufacturing and shell-finishing operations, the three areas that appear to be most open to question as a result of adopting the more flaw-sensitive, harder HF-1 steel as the primary fragmenting material are:

a. The nick and break method of billet separation.

b. The need for spheroidization.

c. The machinability of this harder material, particularly in the rough-turn operation, if the spheroidization is eliminated.

C. PROGRAM EVALUATION - Special

1. Impact of Tooling on Potentially Scarce Materials:

During full-scale production in wartime, a potentially scarce material might be tungsten, used in the various carbide cutting tools. This problem would not be specific to HF-1 steel, but may arise in switching from medium plain carbon steels to any harder or tougher material, such as the hypereutectoid HF-1 that requires more advanced tooling to maintain high rates of production. This problem would, however, be minimized by an effective carbide recycling program. Nevertheless, the subcommittee recommends that grinding also be strongly considered as a potential alternate finishing

method for such materials (Appendix IV). Although the equipment investment might be substantial, no potentially scarce materials are involved, nor are there obvious tool production limitations.

2. Press Capacity: The additional press capacity needed for forging HF-1 relative to the previously-used medium carbon steel (approximately 25 percent additional) and for nosing (approximately 15 percent additional) may exceed the capacity of some of the presses now in use by some plants, thus requiring additional capital investment. It should be noted that the additional tonnage required is based on the very limited production experience to date, but is in the range anticipated by shell manufacturers based on their experience with a variety of other materials.

3. Economic Impact in Manufacture: In the judgment of the committee, the machining problems have not been thoroughly assessed. Therefore, economics of the tradeoff between the additional spheroidization step inserted to reduce rough-turn problems and possibly more costly machining techniques needed for this harder material in the as-forged condition cannot be accurately determined at this time. The estimated increase in the cost of manufacturing the shell that results from increased scrap loss, tool wear, etc. is estimated to be in the range of 10 to 20 percent with the expectation that the former figure will prevail after more production experience is gained with this material.

4. Possible Alternate Processing Methods: The hot-forge heat treat (HFHT) process has been recommended[1] as the primary deformation process route for the production of shell bodies from HF-1 steel, while machining is the suggested metal removal method. From the information available, these appear to be logical decisions. For some of the reasons cited above, the committee suggests that alternatives to one or more of the basic production stages be explored. Such alternate processes include:

a. Grinding, and especially crush grinding, as a replacement for machining as the basic metal-removal process (Appendix V).

b. The Ehrhardt Process, as an alternate processing technique for the forming of shapes such as shells (Appendix IV). Using roller dies and pushing forces, this technique would markedly reduce the steps in forming. Moreover, the compressive stresses generated in the metal would tend to minimize the production or growth of flaws during forming.

c. Hydrostatic extrusion also as an alternative forming method. Here the forming occurs through the use of fluids under very high pressure, which produce a favorable state of stress in the deforming metal and drastically reduce die friction. Two ordnance applications are in the development stage (See Appendix VI).

d. The hot cup cold draw (HCCD) shell manufacturing process is now used on some shells by a number of manufacturers. In general, it is a cheaper

process than the HFHT method, but some problems could be expected to be encountered in the cold working of HF-1, although, as stated above, it can be satisfactorily worked cold to some extent and should not be ruled out without further examination.

Of the four processes noted, the first and fourth are more or less widely-used manufacturing processes, or are variations on such processes. These would be relatively easy to pursue in order to obtain reliable information on past experience as well as specific details relative to the adaptation of such processes to the manufacture of shells from HF-1. If the recommendation to purchase a limited production run of shells from HF-1 steel for optimization of manufacturing operations is followed, it is suggested that some flexibility be given the manufacturer with experience with the HCCD process to try to develop this as an alternate process to HFHT.

The second and third processes noted above are closer to the developmental stages. Activities in these two areas should be monitored and possibly supported, if they appear promising. It should be kept in mind that future rounds using different configurations and made from materials having higher strength levels may also benefit from, or perhaps require, new or revamped processing techniques.

5. Other Techniques for Producing High-Fragmenting Munitions: Although this is not directly within the scope of the present committee review, mention can be made of a number of methods being studied to develop high fragmentation in shells by techniques other than the conven-

tional microstructural control of which HF-1 steel is an outstanding example. One technique with a high potential is powder metallurgy using standard carbon steel or alloy powders. The manufacture of HF-1 steel shells by the power metallurgy route would be difficult, even if economically desirable, because silicon and manganese contents of this magnitude cause problems in the fabrication of similar materials.

The powder metallurgical techniques available for the fabrication of high fragmentation shells are discussed in some detail in Appendix VII. The general consensus is that the older press, sinter, and repress technique provides a structure too weak and brittle for shell steels. The newer powder preform forging technique, however, seems to have potential as a way of producing controlled fragmentation economically. Although this method of manufacture offers promise as an economical method in the long term, when used with a compatible composition, it should be obvious that switching to it would require a major revision in shell manufacturing facilities.

The developmental activities within the Army, as noted in Appendix VII, as well as the programs sponsored by the other branches of the service, should be closely watched. Promising developments should be supported so that this technique can be better evaluated for possible long range adoption as a replacement for present high-fragmenting materials and shell manufacturing methods.

D. CONCLUSIONS AND MAJOR RECOMMENDATIONS

1. From the point of view of manufacture, although potential problems are foreseen, none are sufficiently severe to prevent or limit the adoption of HF-1 for fragmenting projectiles.

2. Machinability studies to date have been too limited and not sufficiently comprehensive to rationally establish the magnitude of the machinability problems involved in the adoption of HF-1, especially in the isothermally held condition. It is recommended that a comprehensive study be made to determine optimum tool materials and conditions for HF-1 in this condition.

3. The need for a spheroidization heat treatment following hot forging has not been definitely established. This follows from the preceding conclusion. If spheroidization is required, however, present industry capacity is insufficient.

4. The nick and break method of billet separation should be thoroughly re-examined as a source of defects in the inner shell surface. Other methods of separation such as sawing, abrasive wheel cutting, and hot shearing should be given further strong consideration as the recommended mode in view of the substantially greater flaw sensitivity of HF-1.

5. Specifications for shell bodies from HF-1 steel should include mechanical properties, heat treatment, and possibly, metallurgical structure, as well as

surface finish. Tighter control on manufacturing operations is mandated by increased flaw sensitivity of this steel.

6. Other production methods, such as suggested herein, should be given greater attention. In particular, crush grinding as a method of metal removal alternate to machining appears to be especially attractive since the metal removal rate is high, it is less sensitive to the level and variations in the hardness of the material, and there is no problem of potentially scarce materials during wartime, such as might arise with tungsten used in carbide tooling.

7. A limited procurement of shells should be made with more than one manufacturer and using steel from several producers. Only then can the scope and magnitude of the problems that may arise in full-scale production be realistically determined. Based on experience with many materials, elimination or mitigation of these problems usually results from the cooperative effort of the steel producer and the manufacturer over a moderate period of time.

8. Continuing monitoring and perhaps support of alternative methods of producing high-fragmenting munitions is recommended.

REFERENCES

1. J. N. Halvatgis, text of the Presentation made before the NMAB Ad Hoc Committee on Shell Steels, Wash., D.C., July 11, 1972.
2. P. V. Riffin, "High Fragmentation Steels for Artillery and Tank Munitions," Report AMMRC SP 72-16, Watertown, Mass., September, 1972.
3. "Steelmaking, Conversion, and Shell Manufacturing Practices for HF-1 Steel," Homer Research Laboratory, Bethlehem Steel Corporation, Bethlehem, Pa.
4. "Pilot Production - High Fragmentation Steel," Engineering Report, Donovan Construction Co., New Brighton, Minn., June 30, 1971.
5. I. C. Nathan, "HF-1 Projectiles," Engg.Test Report, ETD No. 35S, Nov. 10, 1971.
6. J. Campbell, "Processing High Fragmentation Steel," paper presented at Advanced Planning Briefing to Industry, Fort Monmouth, N. J., Nov. 11, 1971 and Pasadena, Cal., December 1, 1971.
7. E. N. Kinas, "Process Development for 105MM M-1 Artillery Shell Using High Fragmentation Steels," AMMRC Report PL-68-18, Watertown, Mass. September, 1968.
8. "Evaluation of Machining Performance of Shell Material," Frankford Arsenal Report SMUFA X 2420, Philadelphia, Pa., August 28, 1969.
9. "Evaluation of Machining Performance of HF-1," Frankford Arsenal Report SMUFA X 2420, Philadelphia, Pa. Oct. 2,1970.
10. R. Meinert, Frankford Arsenal, private communication.
11. "Evaluation of Threading Tests on HF-1 Steel," Frankford Arsenal Report SMUFA X 2100, Philadelphia, Pa., Jan. 27, 1972.

IV. HAZARDS AND SAFETY

A. INTRODUCTION

Conversion from the presently used steels to HF-1 (in the embrittled condition) for 105- and 155-mm steel shells introduces a potential safety hazard because this steel has a lower tolerance for crack-like flaws than the materials that it would replace. The services are aware of this problem, and some effort has been directed toward collecting data on the crack sizes that may be critical* in shells made of a number of potential replacement steels, including HF-1. These preliminary data indicate that large-scale production and use of isothermally heat-treated HF-1 shells should not be undertaken without some procedure that would guarantee their safety.

The need for concern becomes apparent when one examines the data now available on fracture toughness and critical flaw sizes of HF-1 as compared with the steels now being used for shells. Both the Army (AMMRAC [1] and Frankford Arsenal[2] and Navy (Naval Weapons Laboratory)[3]), as well as one private laboratory[4] made such data available to the committee. The government data is summarized in Table VII, and the private laboratory data in Figure 6.

Fracture control is not the only requirement for shell design. It is also necessary that the shell materials have a high enough yield strength to withstand permanent deformation due to set-back stresses and accidental overloading in handling. The high stresses associated with set-

* A critical size of crack is one which will propagate under a stated stress.

TABLE VII

FRACTURE TOUGHNESS AND YIELD STRENGTH OF SHELL STEELS
(all values static)

Material	Condition	Ref.	Yield Strength 0.2% offset ksi	Fracture Toughness ksi-$\sqrt{in.}$	
			R.T.	R.T.	-40°F
SAE 9260	Forged and tempered at 1100°F	(1)	77.0	--	41.5
PR-2	Forged and tempered at 1100°F	(1)	106.5	30.7	22.6
HF-1	Austenitized at 1700°F cooled to 1150°F - hold 1 hr. Air cool	(1)	77.5	27.0	21.8
AISI 1018	Cold Drawn	(2)	45-75	≈45	
AISI 1050	Quench and Temper	(3)	78	75	
AISI 06		(3)	100	67	
AISI 06 RM	Quench and Temper	(3)	150	(a) 53.5	31.1
AISI 06 MOD	Quench and Temper	(3)	120	60.8	54.7
HF-1	Quenched and Tempered	(3)	140	79.4	52.6
PR-2	Quench and Temper	(3)	130	51.9	25.3
AISI 9260	Quench and Temper	(3)	110	70.3	62.4
AISI 1340	Quench and Temper	(3)	115	78.4 †	73.8 †

(a) This value and all following obtained on projectile bodies.

† Conservative K value, specimen too small for valid K_{IC}.

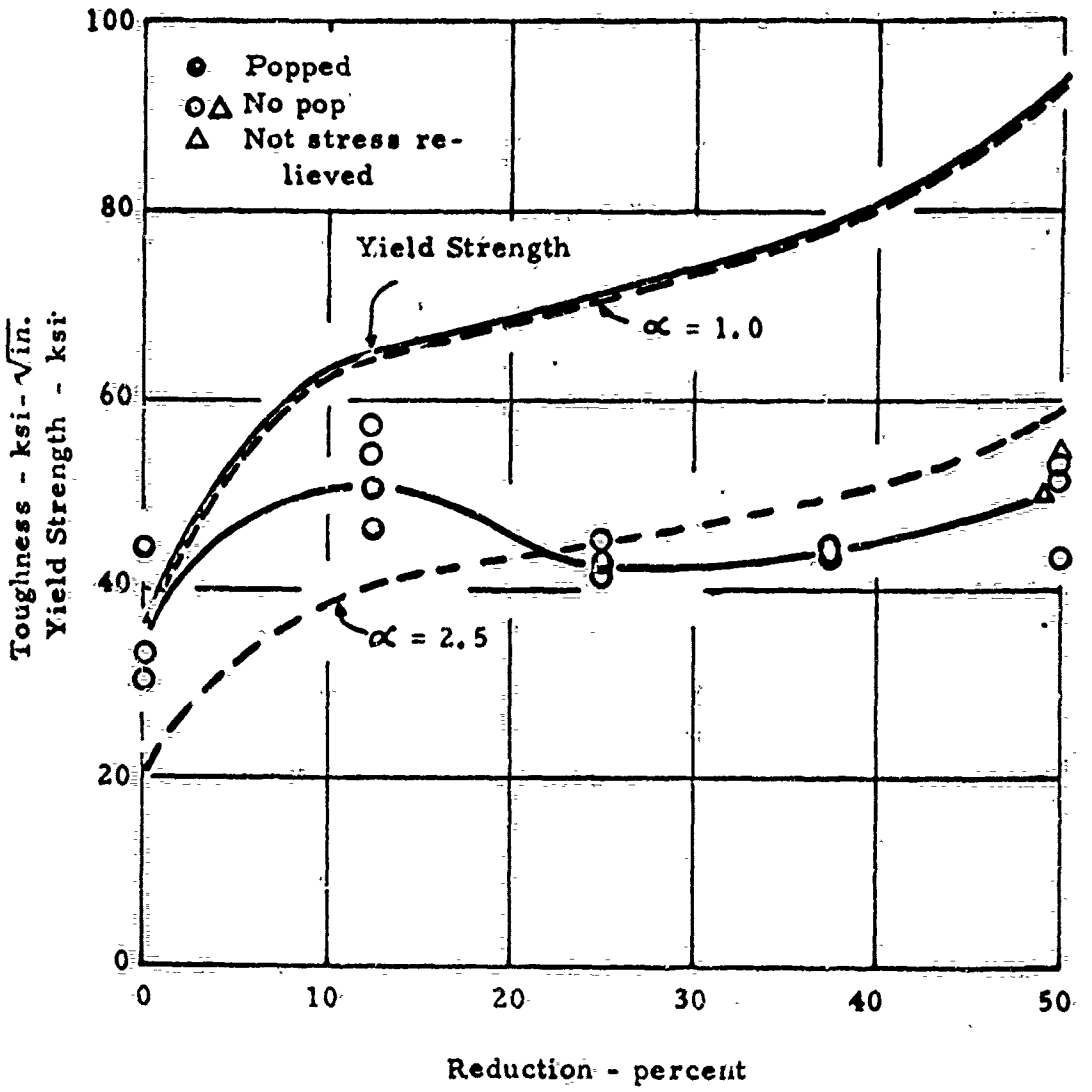

Figure 6 - Effect of Cold Work on Toughness of AISI 1018 Steel, (Stress Relieved at 800°F)[4]

back are generally compressive and/or shear, and these do not contribute to fracture. Nevertheless, they may cause plastic flow which necessitates levels of yield strengths that can only be obtained by a quench and temper (Q and T) heat treatment. Such heat treatments produce relatively high toughness. Even HF-1 in the quenched and tempered condition has a toughness close to that of AISI 1050 Q and T which it is to replace.* Consequently, this report only considers HF-1 in the embrittled condition, since this appears to be the immediate safety problem. Data on the fragmenting behavior of quench-and-temper HF-1 were not known, at least to the committee. While such metal would have a greater tolerance to flaws, it would also be expected to fragment less effectively than when in the embrittled condition.

B. DEFINITION OF CRITICAL FLAW SIZES

The 105- and 155-mm shells are currently being produced from quench and tempered AISI 1050 and to a lesser extent, from cold-drawn AISI 1018 steels. These have fracture toughness values that vary from approximately 45 to 75 ksi-$\sqrt{\text{in.}}$; the isothermally transformed HF-1, on the other hand, has a room temperature fracture toughness of 27 ksi-$\sqrt{\text{in.}}$ By means of linear elastic fracture mechanics, the relationship between critical value of stress-intensity-factor, K_{IC}, and

* The higher toughness of Q and T HF-1 steel may be misleading so far as safety is concerned. The need for high yield strengths imply higher launching stresses so that even with the high toughness, the higher stresses may again lead to small critical flaw sizes.

critical crack size a_c can be written as

$$K_{IC}^2 = Y^2 \sigma^2 \pi a_c \qquad (1)$$

where Y = shape factor

σ = applied stress

Since K_{IC} of HF-1 is between ½ and 1/3 that of the AISI 1050 and 1018 now being used, the critical flaw size for shells made from the former is ¼ to 1/9 as large as the cracks that can now be tolerated. Experience indicates that the shells now being used are safe. Since the AISI 1050 is of the order of twice as tough as cold-worked 1018 steel, the comparison of HF-1 should be made with the latter even though the major replacement is for 1050 steel. (If the manufacturing processes used for shells made from the two kinds of steel produce the same kind and distribution of flaw sizes, the AISI 1050 shells must be extremely safe.)

Calculation of critical flaw sizes for HF-1 shells at all crack locations and orientation is not possible because neither a stress analysis for launching nor dynamic values of K_{IC} at operating temperatures are available at the time of this writing. Nevertheless, some estimates are possible. These are based on static K_{IC} values and stress analyses supplied by NWL on Navy shells and maximum tensile stress values supplied by the Army on 105- and 155-mm shells. Some of the Army data is available in report form,[1,5] others were supplied to the committee by private communication.[6] According to Reference 3c, the critical crack depths* for 5-in., 38-caliber Mark 51 and 5-in., 54-caliber Mark 41 are 0.15

* Semi-elliptical surface cracks, four times as long as deep. Both shells made of AISI 1050 Q and T steel with a yield strength of 78 ksi.

and 0.08 inches respectively. These cracks are assumed to occur at the locations of highest calculated stress which for these shells is equal to the yield strength. The program that generated these very high stresses is said to be an old program, developed to be conservative and its predicted stress values are probably very high, according to private communication with the Naval Weapons Laboratory. Indeed, one might question that any successful firing could be done at this level of critical flaw size. Reference 5 used calculated applied stresses of 26 ksi for the 105-mm M1, and 84 ksi for the 155-mm M549, giving the critical crack sizes shown in Table VIII. Because the embrittled HF-1 has too low a yield strength for use in the 155-mm M549 its critical flaw size is not given.

More recent, and refined calculations,[6] showed the stresses in the two Army shells to be considerably lower, i.e., 14 ksi for the 105-mm M1 and 50 ksi for the 155-mm M549. Further, a stress analysis has been made on the 155-mm M107, and the maximum set-back stress for the projectile was 50 ksi.[6] Using these lower stresses, the critical flaw depths for the 105-mm M1 and 155-mm M107 are approximately 0.20 and 0.16 inch, respectively. Although these lower applied stresses mean larger crack tolerances, their critical sizes are still far smaller than those that can be tolerated in AISI 1050 or 1018 steel.

In order to be conservative in estimating shell safety it must be assumed that cracks that occur in shells are just below the critical values for cold-worked 1018. If this is so, shells made from embrittled HF-1 will require a far more

TABLE VIII

CRITICAL FLAW DEPTH FOR ARTILLERY SHELLS

Material	Y.S. ksi (+70F)	K_{IC} ksi $\sqrt{in.}$ -40F	K_{IC} ksi $\sqrt{in.}$ +70F	105-mm M1 (Applied Stress - 26 ksi, Thickness-0.54 in.) Flaw Depth - in. -40F	105-mm M1 Flaw Depth - in. +70F	155-mm M549 (Applied Stress - 84 ksi, Thickness-0.47 in.) Flaw Depth - in. -40F	155-mm M549 Flaw Depth - in. +70F
HF-1 (Q & T)	140	53	80	.299	.401	.039	.086
PR-2 (Q & T)	130	25	52	.089	.286	.008	.034
9260 (Q & T)	110	62	70	.308	.342	.039	.050
HF-1 (Embrittled)	77	22	27	.039	.060	--	--

sensitive inspection technique than is now being used. (Of course, the exact level of safety of 1018 is not known and to be certain that it is just within a safe regime, and the HF-1 might not be safe, requires the launching of flawed shells.) The inspection procedures to be used cannot be defined in detail by this committee. However, some comments on possible approaches to the problem are warranted.

C. INSPECTION FOR FLAWS

In a material replacement such as is being considered here, pilot sized production and firing tests of the type that have been done are an obvious first step. These not only assist in defining safety requirements, but are of obvious need for evaluating production procedures, machining, etc. Nevertheless, data from such firings can only yield negative results, i.e., a large number of failures in a small sample would indicate a lack of safety, but if no failures occurred in a modest firing program this could not be used as a guarantee of safety. The flaws produced in a small, carefully controlled production run would not be expected to be typical of the largest ones that might occur in full-scale industrial production. Indeed, evaluating safety by firing tests would not only require a very large sample, but would also have to involve a number of manufacturing facilities since the types and sizes of flaws vary from one facility to the next.

Even a successful pilot firing program would require inspection of shells during manufacturing. Because of the serious potential hazard in the use of HF-1 (embrittled) it would be advisable to use 100 percent inspection, at least initially. Magnetic particle inspection procedures on

conventional steels are presently being used, but it is necessary to do 100 percent inspection only until "2500 consecutive bodies have been inspected and found to be free of defect." Subsequent inspections can then be made less frequently. With the presently used process, the inside of the shell cannot be inspected to the sensitivity required. Further, the method is only sensitive to surface flaws, and cannot detect those that are sub-surface.

A more promising inspection procedure is the use of ultrasonics, since it can detect sub-surface flaws. Detections of flaws of the size that are required to insure safety with embrittled HF-1, however, does not appear to be feasible. Further, neither magnetic particle nor ultrasonice are capable of distinguishing a blunt from a sharp-ended crack. Obviously, far larger blunt cracks than sharp ones can be tolerated.

The required level of safety would be most readily obtained by the use of hydrostatic test methods if the test pressures are based on fracture mechanics requirements. Proof tests of this type have been found to be successful for pressure vessels. For these vessels the load-time profile was more complex, since the vessels experienced alternating loading during their lives, but the vessel shape was simpler than shells. The proposed method would require a stress analysis corresponding to launch, and a second one for hydrostatic loading as well as a determination of the dynamic fracture toughness of the steels at the temperatures of interest. The combination of launch stresses at all locations in the shell and dynamic toughness would define the critical crack size and orientation at each point in the shell. The

problem then becomes one of using proof tests to be certain that critical flaws do not escape detection. The application of a hydrostatic pressure to the shell would produce a stress pattern that is somewhat different from the one that occurs in launching. In addition, proof testing is limited to below pressures that produce permanent deformation in the walls. Hence it might be assumed that proof testing would be limited to pressures that would produce wall stresses of the order of 80-90 percent of the yield strength in the thinnest part of the projectile. This procedure would rupture the shell if critical cracks occurred in the regions of highest stress. (The more recent computer programs show that launch stresses did not approach 80-90 percent of yield so that hydrostatic pressures would probably be reduced from these values.) The question then becomes one of whether or not the applied stress would detect critical cracks in the thick-walled portion of the shell. This question cannot be answered without the proper stress analyses and additional data on fracture toughness; however, the major contributor to tensile wall stresses during launch is the hydrostatic pressure that results from the radial expansion of the charge. (Most recent data indicates that the charge acts like a liquid having a yield strength.) The inertia stresses in the shell body itself produce only compressive stresses that would not contribute to fracture, and the same is true of shrinkage stresses introduced by the rotating band. Hence the stress patterns during launch and and proof testing are expected to be sufficiently similar so that proof testing would eliminate all shells with critical flaws. Indeed, the thick bottom end of the projectile experiences only compressive stresses during launch.[6]

D. RECOMMENDATION

It is proposed that the following steps be taken to insure against premature failures of HF-1 (embrittled) 105-mm M1 and 155-mm M107 steel shells. These are separated into preproduction and production steps.

1. Preproduction:

   a. Collect material property data (yield strength and K_{IC}) both statically and dynamically, over the expected range of operating temperatures for HF-1 (or other potentially useful steels) for each of the different ways it might be processed. Preferably, the specimens would be cut from projectiles; if not, it would be necessary to simulate processing with plate.

   b. Carry out theoretical and experimental stress analyses for launching and hydrostatic testing of all shapes projected for 105- and 155-mm shells.

   c. Using data from (a.) and (b.) determine critical flaw sizes, locations and orientation. Test (sharp) flawed projectiles to be certain that calculations are valid.

2. Production:

   Subject projectiles to 100 percent hydrostatic proof test with test procedures designed to uncover all critical flaws This might be coupled with an ultrasonic inspection to determine if the latter is a satisfactory substitute for hydrostatic testing.

Data developed by the Army on the stress levels developed during hydrostatic testing and on the stress levels during launch indicate that such hydrostatic testing should provide adequate assurance that potentially damaging flaws will be disclosed. Therefore, it would be reasonable to initiate production, if desired, while the data spelled out under No. 1 above are being obtained, providing a well-designed 100% inspection (hydrostatic and ultrasonic) of the product is conducted.

REFERENCES

1. F. I. Baratta, "Fracture Mechanics Approach to the Design of Projectiles," Report AMMRC TN 69-05, Watertown, Mass., July 1969.

2. Frankford Arsenal, Private Communication on AISI 1018 Steel with H. Markus, J. Corrie, J. Mulherin.

3.a. Jerome D. Hall, "Critical Flaw Size Determination and Establishment of Defect Size for Ultrasonic Nondestructive Testing of 5"/54 RAP Warhead Bodies," Naval Weapons Laboratory Technical Note TN/E-18/71, Dahlgren, Va., April, 1971.

b. Robert W. Lowry, "Evaluation and Selection of Alternate Steels for the Improved 5"/54 Projectile Body," Naval Weapons Laboratory Technical Report TR-2585, Dahlgren, Va., July, 1971.

c. J. C. Newquist, "Stress and Critical Flaw Size Analysis of Projectiles (5"/38 MK 51 MOD 0, 5"/38 MK 74 MOD 0 RAP, 5"/54 MK 41 MOD 0)," Naval Weapons Laboratory Technical Report TR-2625, Dahlgren, Va., November, 1971.

4. E. J. Ripling, "Fracture Properties of Cold Worked Mild Steels," to be published.

5. Paul V. Riffin, "High Fragmentation Steels for Artillery and Tank Munitions," Report MMRC SP 72-17, Watertown, Mass., September, 1972.

6. Picatinny Arsenal, Private Communication with Bruce Knutelski.

V. CONCLUSIONS

1. From the viewpoints of raw material supply, steelmaking, or manufacture there are no apparent problems sufficiently severe to prevent or limit the adoption of HF-1 for fragmenting projectiles.

2. Certain aspects of manufacture (e.g., machinability and billet separation) are not yet optimized. Further development would tend to assure success and also lower costs.

3. While the selection of HF-1 from other contenders was not reviewed and thus is not endorsed, nor refuted, the committee sees no reason why shells in the embrittled (isothermal heat-treated) condition should not perform as anticipated. Being more prone to brittle fracture, more rigorous inspection for flaws is mandatory.

4. Questions are raised in the body of the report about the use of HF-1 in the quenched-and-tempered condition. Available data are inadequate to predict the risk of fracture for service in this condition. While such metal may be more flaw-tolerant than embrittled HF-1, since the applied stresses are expected to be high, inspection must still be more searching than that for conventional shell steels (a statement which would also be true for other high-strength steels).

5. Some impact on shell manufacturing facilities can be expected. Press capacity may be inadequate, and annealing (for spheroidization), if needed, may call for new

Preceding page blank

furnaces. The controls on existing furnaces for forging may be inadequate. Crush grinding rather than turning should be evaluated for a new installation.

VI. RECOMMENDATIONS

1. A limited production of HF-1 shells should be purchased for the purpose of exploring the influence of steel heat-to-heat variations and disclosing the nature and magnitude of manufacturing problems. The intent would not be to produce a product for stockpiling but rather to explore for the permissible limits in operations and to optimize each. A significant fraction of the production should be examined closely for flaws and for microstructure variability, and these findings correlated with material and process history. The resulting data should be made widely available to the industry.

2. Since the basic oxygen furnace is rapidly becoming the predominant steel production method, the suitability of the HF-1 composition for this process should be confirmed.

3. The sensitivity of fragmentation behavior due to variations in impurities in the steel should be assessed. The present tentative specification may be unduly restrictive, raising cost and limiting the production base, or conversely, some element not now controlled adequately may interfere with performance.

4. A stress analysis in each model shell should be made so as to identify probable failure locations and to compare this stress distribution with the stresses generated in hydrostatic testing. Together with a knowledge of the dynamic fracture toughness of the steel, the critical crack size at any location could then be established.

APPENDIXES

Preceding page blank

APPENDIX I

TYPICAL MELT PRACTICE FOR HF-1

A. Open Hearth Practice - Bethlehem Plant (170 ton Heat)

1. Melting

a. Furnace charge make up

(1) Scrap	- 30%
(2) Hot metal	- 70%
(3) Limestone	- 9 lbs/ton
(4) Ore or mill scale	- 3.3 lbs/ton
(5) Other	- None

b. Melt temperature approximately 2800° F.

c. Oxidize excess carbon with iron ore (or oxygen).

d. Form a basic slag with minimum FeO content of 20%.

e. Add 1,000 pounds of ferro-manganese for a manganese reboil.

f. Aim bath temperature 2800/2820° F.

g. At approximately 1.15% carbon, block heat with 1,000 pounds of Spiegel and 500 pounds of silicon pig.

h. Aim bath temperature 2800° F.

i. At approximately 1.06% carbon, add 2,000 pounds of 66% silicon-manganese. At 85% recovery, this is approximately 34 points of manganese. Contains 10 points of silicon.

j. Five minutes later add 3,200 pounds of 78% high carbon ferromaganese. At 85% recovery, this ic approximately 64 points of manganese.

Preceding page blank

k. The time from the addition of the silicon-manganese (Step i) to tap shall be from 12 to 15 minutes.

2. Tapping and Pouring

a. Temperature at tap to be 2790/2810° F.

b. Ladle lined with bloating type brick (67% SiO_2 - 28% alumina).

c. Additions to ladle

(1) Prior to tap - add balance of manganese required (approximately 62 points) as Med C Man X. Figure 85% recovery.

(2) A limited amount of coke may be added to the ladle during tap if required for recarburization.

(3) During tap - gradually add balance of silicon required gradiently (approximately 65 points) as 75% ferro-silicon. Figure 90% recovery. After alloy additions to the ladle and before slag, add 750 pounds of burnt lime and 200 pounds of soda ash to the ladle.

d. The heat is silicon-killed with no aluminum to be added to the furnace or ladle.

e. Ingot mold size - 30 in. Ø corrugated, closed bottom, big end up. Ingot body approximately 5 tons (Total ingot weight approximately 6 tons).

f. Allow 15 minutes cleanup time from ladle full to start pour.

g. Teem through a 1-1/2-in. Ø nozzle with a typical pouring rate of 140 pounds per second.

h. The hot top is a 26-in. high C&D sinkhead downset into the ingot mold. It is poured 25 in. full for a weight

of 1,900 pounds or 15.3% minimum of the total ingot weight. Add 20 pounds of mildly exothermic hot topping compound immediately after finish pouring of each ingot. Approved brands include Ferrux 107, Ferrum 345 and Soffels #2 liquidizer.

i. Cooling or hold time

(1) Finish pour to moving of ingots - 2-3/4 hours*

(2) Finish pour to stripping of molds - 2-3/4 hours*

(3) Finish pour to charge into soaking pits. As soon as possible after 2-3/4 hours hold to start stripping.

B. Open Hearth Practice - Lackawanna Plant (140 ton Heat)

1. Melting

a. Furnace charge make-up - 402,300 pound base weight

(1) Scrap - 265,000 pound selected - mostly high carbon

(2) Hot metal - 165,000 pound

(3) Limestone - 10,000 pound

(4) Ore - None

(5) Other - None

b. Melt temperature - 2770° F at 1.56% C

c. Desirable slag composition - Lime/silica ratio of 3/1 to accomplish sulfur reduction.

d. Additions prior to blocking - 4500 pound burnt lime, 3500 pound ore, 800 pound fluorspar.

e. Blocking practices

(1) Temperature at block - 2830° F

*If heat must be moved, it should be moved within 15 minutes of finish pour and then left setting for balance of specified 2-3/4 hour hold.

(2) Additions to obtain block - 3500 pound SiMn, 3000 pound FeMn

(3) Carbon level - .95 C

f. Additions subsequent to block - none

g. Analysis prior to tap - .95 C, .15 Mn, .009 P, .034 S

2. Tapping and Pouring

a. Temperature at tap - 2830° F

b. Type of ladle - elliptical

c. Additions to ladle

(1) Prior to tap - none

(2) During and after tap - 4500 pound (75%) FeSi, 3700 pound FeMn, 150 pound coal. Reladled through 4-in. nozzle to second ladle.

d. Killing practice - no aluminum added.

e. Ingot mold size and design - 26 in. x 28 in. fluted, big end up, 12.5% hot-top volume.

f. Pour temperature and rate of pour - 2-1/4-in. nozzle, 40 min. to pour 34 ingots.

g. Design of hot top - C & D hot top

h. Cooling time

(1) Elapsed time from finish of pour to moving of ingots - 1 hr., 45 min.

(2) Elapsed time from finish of pour to stripping mold - 3 hr., 30 min.

(3) Elapsed time from finish of pour to charge into soak pit - aim 4 hrs.

C. Electric Furnace Practice (Modified Single Slag) - Bethlehem Plant (50 ton Heat)

1. Melting

a. Furnace charge make-up

(1) Scrap - 100% carbon steel

(2) Hot metal - None

(3) Limestone - None

(4) Ore - None

(5) Other - Carbon as petroleum coke (total carbon in charge to be 1.50%).

b. When 70/80% melted add fluxes for slag (40 lb/ton burnt lime plus silica sand and fluorspar as required).

c. Oxidize excess carbon with oxygen or ore.

d. Melt temperature 2880/2900° F.

e. Flush off oxidizing slag and add slag fluxes (30 lb/ton burnt lime, 8 lb/ton of silica sand, 6 lb/ton of spar and 4 lb/ton of graphite) to form a semi-reducing slag with an FeO content of 3 to 5%).

f. When slag is well shaped up add 10 points of silicon as 48% ferro-silicon and 10 points of manganese as ferro-manganese.

g. Adjust bath temperature to 2875° F.

h. Add manganese required to meet specification as ferro-manganese to the furnace 10 minutes prior to tap.

i. Aim bath temperature 2840/2860° F (tap).

j. Add silicon required to meet specification as 75% ferro-silicon to the ladle prior to tap.

2. Tapping and Pouring

a. Aim tap temperature 2850 ± 10° F

b. Ladle lined with bloating type brick (67% SiO_2, 28% alumina).

c. Additions to ladle

(1) Prior to tap - silicon to meet specification as 75% ferro-silicon.

(2) During or after tap - none.

d. Silicon-killed. No aluminum is to be added to either the furnace or the ladle.

e. Ingot mold size - 30" Ø corrugated, closed bottom, big end up.

Ingot body approximately 5 tons (total ingot weight approximately 6 tons).

f. Aim cleanup time from start tap to start pour is 15 minutes.

g. Teem through a 1-1/2 in. Ø nozzle with a typical pouring rate of 105 pounds per second. The metal temperature after pouring into the mold is approximately 2650°F.

h. The hot top is a 20 in.-high clay sinkhead, downset into the ingot mold. It is poured 19 in. full for a weight of 2,130 pounds or 16.8% minimum of the total weight. Add 22-1/2 pounds of mildly exothermic hot topping compound immediately after finish pouring of each ingot. Approved brands include Ferrux 107, Ferrux 345, and Soffels #2 liquidizer.

i. Cooling or hold time.

(1) Finish pour to moving of ingots - 3 hrs

(2) Finish pour to stripping of molds - 3 hrs

(3) Finish pour to charge into soaking pit -- as soon as possible after 3 hr. hold to start stripping.

D. Electric Furnace (Double Slag Practice) Bethlehem Plant (50 ton Heat)

1. Melting

a. Furnace charge made up

(1)	Scrap	- 100% carbon steel
(2)	Hot metal	- None
(3)	Limestone	- None
(4)	Ore	- None
(5)	Other	- Carbon as petroleum coke (Total carbon in charge to be 1.50%)

b When 70/80% melted add burnt lime (40 pounds/ton).

c. Oxidize excess carbon with oxygen or ore.

d. Melt temperature 2880/2900° F.

e. Slag off.

f. Add 20 points of silicon as 48% ferro-silicon and 60 points of manganese as ferro-manganese to the base metal.

g. Add slag fluxes to form a white disintegrating slag under 1% FeO (30 lb/ton of burnt lime, 4 lb/ton of fluorspar, 3-1/2 lb/ton of silicon sand and 3 lb/ton of graphite).

h. When slag is well shaped up, rabble bath thoroughly and take slag and metal test. Analyze slag for FeO and analyze metal completely (BR Test).

i. Adjust bath temperature to 2875° F prior to alloy additions.

j. Add manganese required to meet specification as ferro-manganese to the furnace 20 to 30 minutes prior to tap.

k. Add 25 points of silicon as 48% ferro-silicon to the furnace 10 minutes prior to tap.

l. Adjust bath temperature to 2840/2860° F (tap).

2. Tapping and Pouring

a. Aim tap temperature 2850 ± 10° F.

b. Ladle lined with bloating type brick (67% SiO_2, 28% alumina).

c. Additions to ladle.

(1) Prior tap - Add balance of silicon required to meet specification as 75% FeSi.

(2) During or after tap - None.

d. Silicon-killed. No aluminum to be added to either the furnace or the ladle.

e. Ingot mold size - 30 · 7 corrugated, closed bottom, big end up.

Ingot body approximately 5 tons (total ingot weight approximately 6 tons).

f. Aim cleanup time from start tap to start pour is 15 minutes.

g. Teem through a 1-12" Ø nozzle with a typical pouring rate of 105 pounds per second. The metal temperature after pouring into the mold is approximately 2650° F.

h. The hot top is a 20" high clay sinkhead, downset into the ingot mold. It is poured 19" full for a weight of 2,130 pounds or 16.8% minimum of the total ingot weight. Add 22-1/2 pounds of mildly exothermic hot topping compound immediately after finish pouring of each ingot. Approved brands include Ferrux 107, Ferrux 345 and Soffels #2 liquidizer.

i. Cooling or hold time.

(1) Finish pour to moving of ingots - 3 hrs.

(2) Finish pour to stripping of molds - 3 hrs.

(3) Finish pour to charge into soaking pit - as soon as possible after 3 hr. hold to start stripping.

E. Electric Furnace Practice (Single Slag) Los Angeles Plant (75 ton Heat)

1. Melting

a. Furnace charge make-up - 225,000 pounds base weight.

(1) Scrap - 66,000 pounds Prime Industrial, 70,000 pounds #1 Bales, 27,000 pounds Electric Furnace Scrap

(2) Hot metal - none

(3) Limestone - 6,000 pounds rock lime, 7,000 pounds burnt lime.

(4) Ore - none (5,000 pounds mill scale)

(5) Other - 67,000 pounds cast or pig iron.

b. Melt temperature - 2770° F.

c. Desirable slag composition - 3/1 lime-silica ratio.

d. Additions prior to blocking - none

e. Blocking practices

(1) Temperature at block - 2800° F.

(2) Additions to obtain block - 600 pounds 50% FeSi.

(3) Carbon level - .93

f. Additions subsequent to block - 6,000 pounds 65% SiMn.

g. Analysis prior to tap

C	Mn	P	S	Si
.93	.24	.016	.014	.005

2. Tapping and Pouring

a. Temperature at tap - 2775° F.

b. Type of ladle - 110 ton, manually operated, bottom pour.

c. Additions to ladle

(1) Prior to tap - 1,350 pounds 75% FeSi.

(2) During and after tap - 250 pounds carbo coke

d. Killing practice - none during pouring practice (do not add aluminum)

e. Ingot mold size and design - 22 in. x 24 in. x 81 in. B.E.U.

f. Pour temperature and rate of pour - 2700° F (200 pounds per second).

g. Design of hot top - C & D Ferroboard liner (11.4% volume).

h. Cooling time - 1 hr. and 45 min. after finish pour

(1) Elapsed time from finish to pour to moving of ingots - 1 hr. 45 min.

(2) Elapsed time from finish of pour to stripping mold - 3 hrs. 20 min.

(3) Elapsed time from finish of pour to charge into soaking pit - 3 hrs. 45 min.

CONVERSION OF HF-1

1. Ingot Breakdown

a. Soaking pit temperature and heating

(1) Charge ingots into soaking pit which is no better than 300° F above the ingot surface temperature. Heat at a maximum rate of 100° F/hr. to 2025/2075° F range. Observe 2100° F maximum.

(2) Soak at 2025/2075° F for 1/4 hr. per inch.

b. Rougher temperature is 1925/1975° F.

c. Cropping practice - cut off sinkhead plus 1% of ingot weight at top end and cut off approximately 4% of the ingot weight (including stool) at the bottom end.

d. Hot machine scarf the bloom or billet.

e. Control-cool all blooms or billets as follows:

(1) Hold at 1300° F for 8 hrs.

(2) Furnace cool to 1000° F.

(3) Unload.

(4) Aim hardness - 241 BHN maximum

f. Pickle and spot grind or chip billets or blooms as required. Billets can be cold straightened if hardness is less than 241 BHN.

2. Secondary Rolling

This section pertains to blooms or billets that were control-cooled after primary rolling.

a. Heat at 1975/2025° F for rolling.

b. Rougher temperature 1925/1975° F.

c. Sections approximately 3 in. or under may be pile cooled in air. Sections over about 3 in. shall be given a retarded cooling such as cooled in covered car or buried in insulating material.

e. Method of final conditioning should be grinding, if necessary.

SHELL MANUFACTURE

1. Billet Separation

a. Cold-Sawing - Billets that have been controlled-cooled to a hardness level less than BHN 241 following rolling can be cold-sawed. Where controlled-cooling has produced a hardness greater than BHN 241, a subcritical anneal at 1300° F is recommended prior to cold-sawing.

b. Nick and Break - This procedure has been successfully used on HF-1 at hardness levels from below BHN 241 to approximately BHN 300.

c. Hot Shearing - As-supplied hardness is not critical for hot shearing, billets can be heated to forging temperature, sheared hot, and then forged in a continuous operation.

APPENDIX II

MILITARY SPECIFICATION

STEEL ALLOY; SPECIAL PURPOSE FOR AMMUNITION COMPONENTS (HF-1)

1. SCOPE

1.1 Scope.-This specification covers hot rolled bars and semi-finished billets of a specific composition to be used in the manufacture of Artillery, Warhead and Mortar Ammunition Components.

1.2 Classification.-The steel shall be furnished in the compositions listed in Table I, designated HF-1.

2. APPLICABLE DOCUMENTS

2.1 The following documents of the issue in effect on date of invitation for bids or request for proposal, form a part of this specification to the extent specified herein.

SPECIFICATIONS

Military
MIL-A-2550 - Ammunition and Special Weapons, General Specification for

STANDARDS

Military
MIL-STD-109 - Quality Assurance Terms and Definitions
MIL-STD-1167 - Ammunition Data Card
MIL-STD-1169 - Packaging, Packing and Marking for Inert Ammunition Components

Federal
Federal Test Method Standard No. 151 - Metals; Test Methods
Federal Standard No. 66 - Steel; Chemical Composition and Hardenability

2.2 Other publications.-The following documents form a part of this specification to the extent specified herein. Unless otherwise indicated, the issue in effect on date of invitation for bids or request for proposal shall apply.

ASTM-A274 - Alloy Steel Blooms, Billets, and Slabs for Forging, Specification for
ASTM-A322 - Hot Rolled Alloy Steel Bars, Specification for

(Application for copies should be addressed to the American Society for Testing and Materials, 1916 Race Street, Philadelphia, Pa. 19103).

3. REQUIREMENTS

3.1 Melting Process.-The steel shall be made by one of the following processes:

Basic Oxygen Process

Open Hearth

Electric Furnace

3.1.1 Deoxidation Practice.-Aluminum shall not be used in the melting and teeming of this alloy for any purpose.

3.2 Chemical Analysis.-The chemistry shall be uniform throughout the heat of steel as determined by check analysis.

3.3 Chemical Composition.-The alloy shall comply with the composition contained in Table I.

TABLE I

	Ladle Analysis
Carbon	1.00 - 1.15
Manganese	1.70 - 2.10
Silicon	0.70 - 1.00
Sulphur	.040 max.
Phosphorus	.035 max.
Nickel	.25 max.
Chromium	.20 max.
Molybdenum	.06 max.
Copper	.35 max.
Aluminum	.020 max.

3.4 Internal Soundness.-The steel shall be of such a quality as to meet the macroetch requirements applicable to Specification ASTM-A274 or ASTM-A322.

3.5 Dimensions.-The material shall conform to the nominal size specified in the contract or purchase order.

3.5.1 Permissible variations for dimensions shall be as specified in the applicable ASTM specifications.

3.6 Workmanship.-The steel shall be of uniform quality and condition within the limits of good manufacturing and inspection practices; free from pipe, deep seams or cracks, excessive porosity, segregation of non-metallic inclusions, and other defects which due to their nature, degree, or extent prevent the fulfillment of other requirements.

4. QUALITY ASSURANCE PROVISIONS

4.1 Responsibility for inspection.-Unless otherwise specified in the contract or purchase order, the supplier is responsible for the performance in the contract or order, the supplier may use his own or any other facilities suitable for the performance of the inspection requirements specified herein, unless disapproved by the Government. The Government reserves the right to perform any of the inspections set forth in the specification where such inspections are deemed necessary to assure supplies and services conform to prescribed requirements.

4.1.1 Quality Assurance Terms and Definitions.-Reference shall be made to MIL-STD-109 to define quality assurance terms used.

4.1.2 Inspection Provisions.-Inspection shall be in accordance with MIL-A-2550 except as specified herein.

4.2 Inspection Testing.

4.2.1 Check Analysis.-Two samples for check analysis will be selected from each heat of steel. One sample shall represent the top end of the top cut of the first ingot and the second sample shall represent the bottom end of the bottom cut of the last ingot. Failure of the check analysis to comply with Table I within the tolerances specified in FED-STD-66 shall be cause for rejection of the heat.

4.3 Test Methods and Precedures

4.3.1 Check Analysis.-The selection of samples for check analysis shall be in accordance with FED-STD-151. Determination of chemical analysis shall be by any approved method.

5. PREPARATION FOR DELIVERY- Not applicable.

6. NOTES

6.1 This specification covers a specific alloy steel developed by Bethlehem Steel Corp. for use in artillery, warhead and mortar ammunition. The Government has purchased the right to have the steel manufactured by any qualified steel supplier, royality-free, under the terms of contract number DAAA09-72-C-0205, Entitled, "Technical Data Rights and Patent License Agreement."

6.2 Processing information which may be helpful in manufacturing this alloy will be supplied by the Government upon written request of any potential steel supplier.

6.3 Ordering data.-Procurement Documents should specify the title, number and date of this specification.

Custodian:

Army - MU

Preparing activity

Army - MU(FA)

Project No. 1395-A203

APPENDIX III

MACHINING HF-1 STEEL

The machining properties of the HF-1 steel appear to be one of the major factors in the potential adoption of this material for shells. Reams of paper containing bits and pieces of machining data on the HF-1 steel have been sent to the committee members. Very little data were presented from which conclusions can be made, however. Many questions remain unanswered. For example, there are many instances in which a single grade of carbide was selected for a particular machining operation for which the grade was not the most suitable. Also, only a single cutting speed or feed was selected for the machining tests. In several instances there is some question whether the heavier feed that was tried and discarded would not have cut satisfactorily at a lower cutting speed. In general, the highest production rates can be obtained by using heavy feeds and low cutting speeds, particularly in turning.

Specific examples of the aforementioned comments are as follows:

Reference 1, entitled "Evaluation of Machining Performance of Shell Materials," covers three different experiments to evaluate the relative machining performance of a group of engineering materials that are potential shell materials. The results of these tests were not conclusive. In addition, the investigation was not sufficiently broad to justify making the important necessary conclusions. For example, the cutting conditions involved one cutting speed,

300 ft./min., one feed, .020 in./rev., and a machining time of two minutes. Data obtained from short tool-life tests are useless in the selection of tool materials or optimum machining conditions.

The criterion for high production in turning operations is the use of as heavy a feed as can be tolerated for the rigidity of the setup and the required surface roughness. The cutting speed is then reduced to a level where the required tool life is obtained. This was not done in this series of tests.

The selection of the proper grade of carbide is another question. Excessive wear on the tool was cited for the conditions used. This indeed appeared to be wear and not chipping; hence, it would appear that a grade of carbide one or two degrees higher, such as C-6 or C-7 grade, would have worn less rapidly and provided longer tool life. The carbide grade WA-5 that was used is in the category of C-5 to C-6.

As mentioned earlier, the results of accelerated tests (i.e., conducted at excessive cutting speeds) that produce appreciable tool wear in two minutes are not reliable for predicting the performance of such tools. The magnitude of the question to be answered would appear to justify appreciably more extensive tests than those on which the conclusions were based.

The report, "Evaluation of Threading Tests on HF-1 Steel,"[2] did present some useful data; however, the program was also far too limited in scope. While the selection of the tool materials was good, the tests were conducted at only

two different speeds with each tool material. It is quite possible that another cutting speed could have provided more satisfactory tool life than those used. Also, the Baxtron DBW (submicron carbide) chaser tool, which appeared to be the more satisfactory tool from the standpoint of performance, is very costly. Another submicron carbide tool material, Ramet I, is 15 to 25 percent cheaper than the DBW. This tool material might perform far better than the high-speed steel chaser and at a lower cost.

Furthermore, it is quite possible that in cutting the threads with high-speed steel chasers, an active cutting oil would have performed much better than the water-base cutting fluid used in the aforementioned tests.

In the Donovan Construction Company Report[3] there were a number of conditions that were used in the program of machining 155-mm HE M-107 projectiles in which the grade of carbide tool could be questioned. There are also a number of references to situations where the material machined readily but the tool life was poor. It is difficult to relate these two facts since they have opposite meanings.

Examples where the tool material selection could be questioned are as follows:

<u>Operation 110</u>: The cut-off tool was a 78B grade of carbide. The 78B grade was replaced several years ago by grade 370. It is quite possible that a grade 350, which is harder, would provide longer tool life. Also, there is a question of why the open end of the forging was not cut off to the proper length by an abrasive saw.

Operation 120: In rough turning, a grade 370 carbide was used and the cutting speed was cut in half in order to get a reasonable tool life. It is suggested that the new titanium carbide coated tools be used instead of grade 370 at heavy feeds and low cutting speeds and that the feed only be reduced when chipping occurs on the tool or when the surface finish produced is not satisfactory.

Operation 180: Boring, facing, and chamfering of the nose was performed with a grade NTA. This grade of carbide is a C-5 grade that is somewhat softer than normally recommended for a boring or facing operation. A C-7 grade would appear to be much better for the light cuts involved in this operation. As a matter of fact, the solid titanium carbide could prove to be even more desirable. This is particularly important since problems were encountered in machining with the C-5 grade of carbide.

It was recommended that in Operation 190, the HF-1 shells be spheroidized in order to get tool life. It is quite possible that by using a solid titanium carbide or titanium coated carbide, or even a ceramic tool, the shells could be finished turned without spheriodizing the material. The boss cutoff operation, Operation 200, is performed with both hack saws and band saws. This is another operation that could possibly be performed faster and cheaper by an abrasive cutoff saw.

Harder grades of carbide, C-7 grade (possibly titanium carbide), should be used in Operation 210 involving the facing of the base and tapering of the boattail.

In turning the band seat, Operation 220, difficulties were encountered in using a C-5 grade of carbide because of tool wear and breakage when the bars were not spheroidized. It is quite possible that if a C-7 grade, coated carbide, a titanium carbide, or a ceramic was used as the tool materials, the HF-1 could be machined satisfactorily without spheroidization. This machining operation requires a light cut and hence the aforementioned tool materials should work well.

In Operation 230, thread tapping, machining problems were encountered on all the materials. The grade of tool material was not stated. It is quite possible that one of the M40 series high-speed steel chasers could be used advantageously, particularly with an active cutting fluid.

Another problem that exists is in the nick and break operation, Operation 20. Often the breakage will occur along a diagonal path, or the surface will contain cracks. A program was carried out under Contract DAAA25-70-C-0353 on the "Production Evaluation of New Sawing Concepts." It was found that the cost per cut for the sawed billets was competitive with the cost for the broken billets.

In addition, the rejection rate for inspected forgings was estimated to be reducible by about 40 percent. The sawed billets with their clean square ends caused less wear in the forged tooling. They were also easier and more economical to handle. The accuracy of the billet weight was ± 1/2 lb. when cutting 6-in. diameter bars.

SUMMARY

In all of the reports that have been issued on the various attempts to evaluate the machinability of the HF-1, it appears that no single well-planned program covering a wide range of machining conditions has been carried out. This type of program would answer conclusively many of the questions that have arisen concerning the machinability of HF-1 steel.

Recently a number of new cutting tools, such as coated carbides, submicron carbides, titanium carbides and high-strength ceramic tools have been made available to industry. It appears that all four of these tool materials could be used advantageously in the various machining operations in the production of HF-1 shells. It is also possible that the new carbide, Ucon, could be used successfully for the heavy roughing cuts. Before reliable answers can be obtained for the various machining problems that exist in the production of shells made of HF-1, a program should be evolved for evaluating the various new tool materials over a range of speeds and feeds that would establish the machining conditions most closely approaching maximum production and minimum cost.

REFERENCES

1. "Evaluation of Machining Performance of Shell Material," Frankford Arsenal Report SMUFA X 2420, Philadelphia, Pa., August 28, 1969.

2. "Evaluation of Threading Tests on HF-1 Steel," Frankford Arsenal Report SMUFA X 2100, Philadelphia, Pa., Jan. 27, 1972.

3. "Pilot Production - High Fragmentation Steel," Engineering Report, Donovan Construction Co., New Brighton, Minn., June 30, 1971.

APPENDIX IV

PRODUCTION OF SHELL BY GRINDING EXTERNAL SURFACES

In recent years, grinding has been developed to the point where high metal removal rates can be accomplished by some processes. One development has been in crush grinding, particularly at high grinding speeds. In principle, a shaped grinding wheel is plunged against the rotating part so that the external cross section of the part takes on the negative of the shaped grinding wheel face. The entire length of short parts can be shaped at one time. Long parts must be done in steps lengthwise.

An example of what can be done is as follows: The part to be ground has a conical shape 16-in. long, 4-1/4-in. diameter in the center part, tapering to 2-1/8 in. at one end and 3-1/2 in. at the other end. Based on tolerances of .001 in. or more on diameter, surface finishes of 32 rms or more, and stock removal of .250 in. per side, is possible to perform the following: The part to be ground is located between centers or on the arbor, grinding 8-in. wide on one end and then 8-in. wide on the other end. Two operations would be required to complete the contour. The following options are represented as samples:

<u>Option No.1</u>

Model #187-B Crushtrue Grinder
7000 SFPM Wheel
50 H.P. Wheel Drive

Stock removal in inches per minute	.044
Grind time only, each operation	5 min. - 40 sec.

Probable wheel - Vitrified - 80M

Preceding page blank

Option No. 2

Model #187-B Crushtrue Grinder
11,000 SFPM Wheel
60 H.P. Wheel Drive

Stock removal in inches per minute	.079
Grind time only, each operation	3 min. - 10 sec.
Probable wheel - Vitrified - 60M	

Option No. 3

Model #HS-300 Hi-Speed Grinder
18,000 SFPM Wheel
125 H.P. Wheel Drive

Stock removal in inches per minute	.220
Grind time only, each operation	1 min. - 9 sec.
Probable wheel - Vitrified - 80M	

APPENDIX V

ALTERNATE MANUFACTURING PROCESS FOR THE PRODUCTION OF WARHEADS

A. INTRODUCTION

At the present time, classical forming methods are employed to produce steel warheads. The forming operations are either the hot-cup, cold-draw method or the hot-forge and heat-treat method. Typically, these processes require many production steps involving repeated cold drawing, surface preparation, annealing, and machining. A typical sequence is illustrated in Figure 7. For this particular projectile there are eight forming operations, seven heat treatments, and at least one intermediate machining operation. Production of warheads in the new fragmenting materials by these classical techniques would be even more difficult, may require more intermediate operations, and consequently would be slower and more costly. A manufacturing process which may alleviate these possible difficulties is the Ehrhardt Process.

B. PROCESS DESCRIPTION

In its original form, the process consists of two steps. First, a tube blank is produced by reverse extrusion on a press (Figure 8). The starting material is usually a billet cut from a round-corner square; thus the hole in the blank is produced by radial material flow. Reverse material flow that would drastically reduce the life of the punch is practically eliminated. The billet is not pierced through completely; rather, a closed bottom with a reduced cross-section is produced.

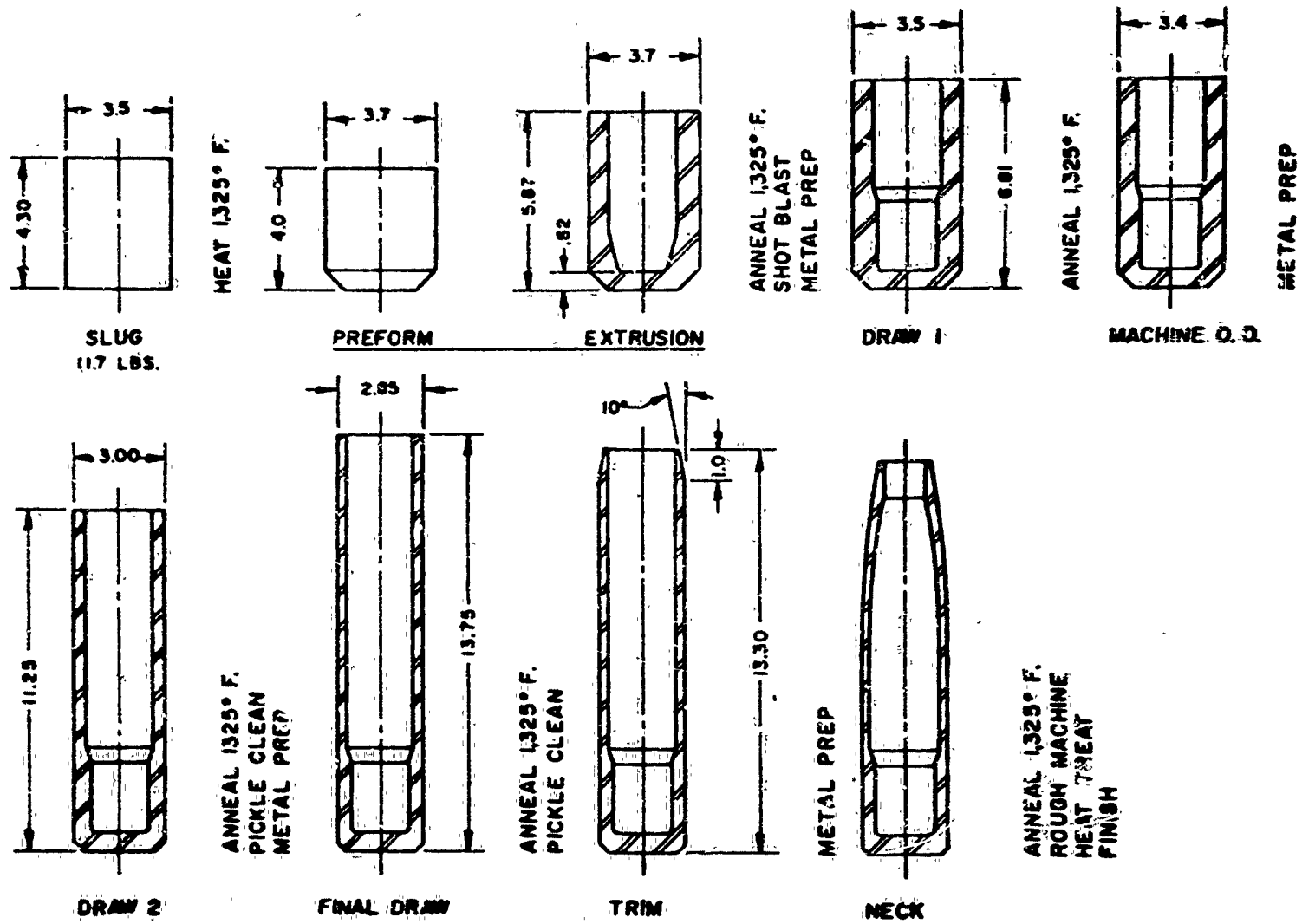

Figure 7 - Schematic Illustration of Conventional Processing for Warheads.

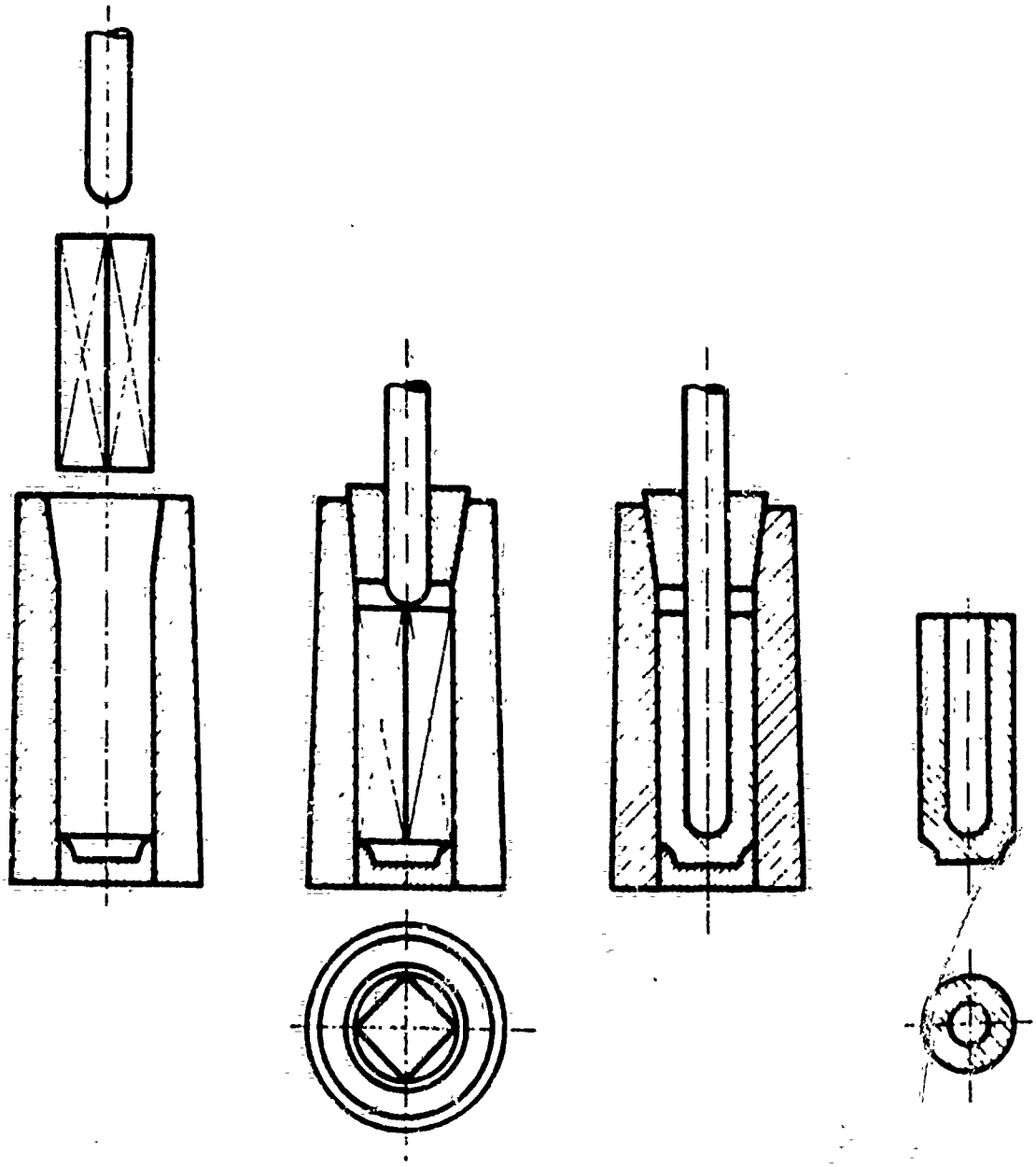

Figure 8 - Production of Tube Blank by Radial Extrusion of Square Billet.

The tube blank is then reheated and transferred to a push bench (Figure 9), the mandrel of which is longer than the finished tube. The reduced nose section of the tube blank ensures centering and, on initiating the push stroke, the mandrel pushes the tube blank through a series of dies (usually 16 to 28). Reduction is low (5% to 20%) for each die, but very high (usually up to 98%) in total. The significant feature of this process is the use of roller dies at each station, as shown schematically in Figure 10. Each die is composed of three or four rollers; drafts are relieved at the roller gaps, and successive roller dies are rotated by 60° (or 45°) so that a flash can never form. The tube is pushed through all the dies (calibers), the mandrel is then detached from the push bar, and the finished tube is reeled off the mandrel.

Forces in piercing and pushing have been established for such a process. This permits the calculation of individual pass reduction with sufficient accuracy to equalize forces and minimize the total force requirement. It has been determined that a dramatic reduction in push force and an increase in deformation efficiency is obtained when roller dies are used instead of stationary ring dies as used in current production methods. As shown in Figure 11, the forces are almost halved, the maximum reduction obtainable is greatly increased, and the process efficiency is doubled when sliding friction in draw dies is replaced by the rolling friction of roller dies.

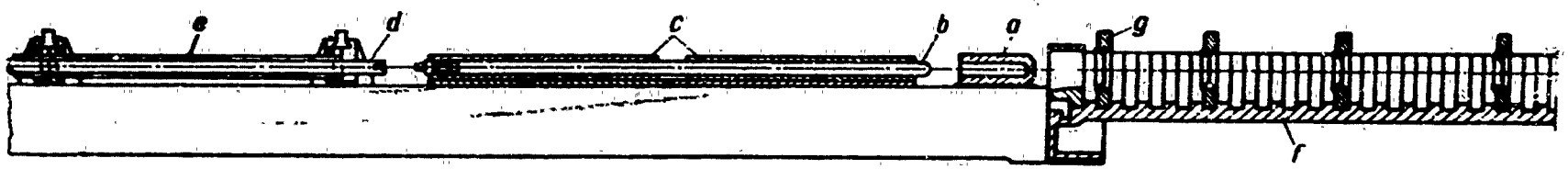

Figure 9 - Principle of Roller Die Push Bench. (a) Tube blank; (b) mandrel; (c) mandrel guide; (d) push rod guide; (g) roller die; (f) die bed.

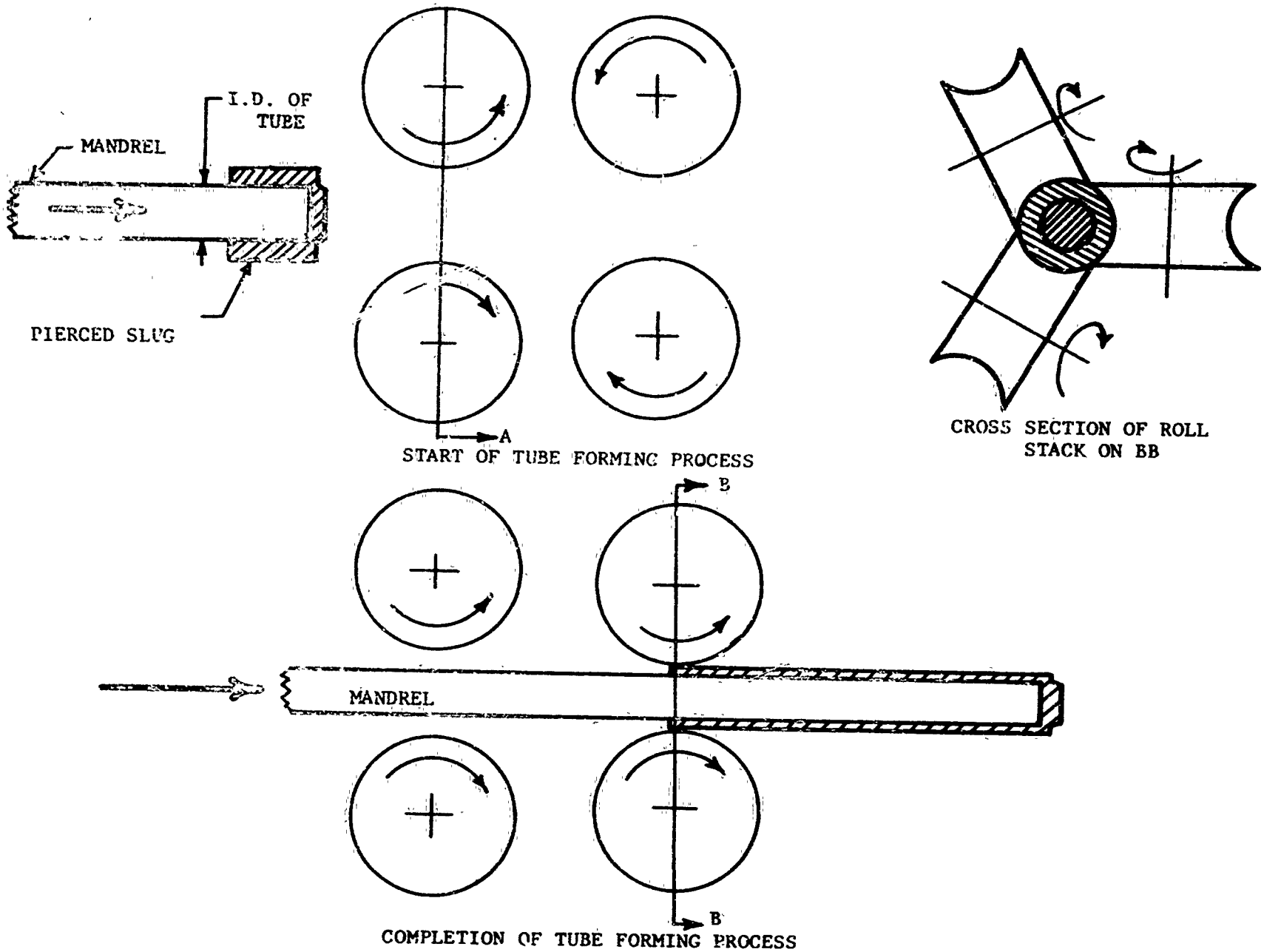

Figure 10 - Schematic Representation of Roller Die Process.

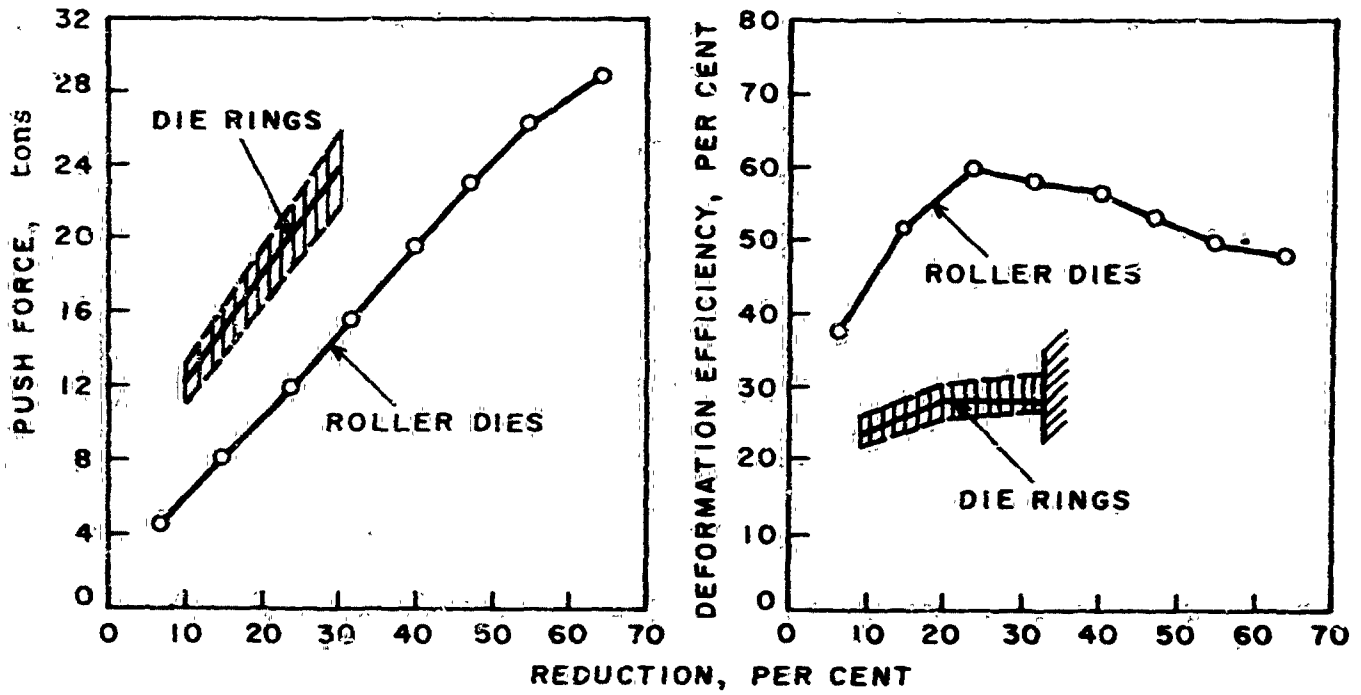

Figure 11- Drop in Push Force and Increase in Deformation Efficiency When Pushing Medium-Carbon Steel at Various Reductions Through Stationary Die Rings and Roller Dies.

C. ADVANTAGES

The advantages of the roller die method for the subject application can be summarized as follows:

1. A major advantage of the process is the low capital equipment cost. Although care should be taken in designing the roller dies, they have a simple geometry and are therefore relatively inexpensive. The dies can be mounted in simple rigid structures and are easily accessible.

2. The process is well suited for mass production, since rates can be high and the process lends itself to automation.

3. The finished product is a closed-end tube, which may eliminate one welding operation and associated difficulties.

4. The inside geometry of the tube is dependent only on the geometry of the push rod. If a small taper is required on the inside of the tube, all that is needed is to give a corresponding taper on the push rod.

5. Large reductions are obtained, but in small increments; therefore, strain-rate sensitive materials may be formed. Total reductions that are not obtainable with any other process are realized by virtue of the incremental forming approach. Stresses are always compressive, thereby favoring materials of limited ductility.

6. Since the tube blank is pushed (in contrast to tube drawing), tensional instability is eliminated. The tube and mandrel are supported by the dies themselves against compressional deflection.

7. Lubrication problems are minimized because sliding contact is replaced by rolling contact. Materials that are notoriously difficult to lubricate (such as titanium alloys, aluminum alloys, some steels, refractory materials, and superalloys) should be amenable to processing by this technique.

8. In comparison to extrusion, production rates are high and material usage is more efficient. Because of the compressive nature of forming, properties tend to be uniform from beginning to end, nose and tail losses are minimal, intermediate wall thicknesses may be readily produced by removing some roller dies, and there is no obvious diameter limitation.

9. Material flow is uniform around the circumference of the tube, and laps, folds, and cracks are completely avoided with proper roll pass design.

APPENDIX VI

HYDROSTATIC EXTRUSION FOR SHAPING ORDNANCE ITEMS

Hydrostatic fluid pressures have been utilized in metal forming operations in a number of countries throughout the world. Most of these applications are in the developmental stage. The Western Electric Company, however, has already utilized hydrostatic metal forming in a number of in-production processes to replace previous manufacturing operations, with substantial savings in processing costs.

The general nature of the technique is described in Steel, Nov. 15, 1965, pp. 62-65.

The results of work on Navy contracts at Battelle Memorial Institute are contained in the following two references:

"Fabrication Technology and Methods for Improved Production of Small-Diameter Missile Motor Cases," Final Report on Contract DAA HO 3-69-C-0472, AD889335, March 1971, G. A. Gegel, T. G. Byrer, R. E. Monroe, and R. J. Fiorentino.

"Evaluation of the Tooling Design for the Production of ASROC Motor Case by Hydrostatic Extrusion," Final Report on U. S. Navy Contract No. N00419-70-C-0284, February 1972, G. A. Gegel, G. E. Meyer, T. G. Byrer, and R. J. Fiorentino.

APPENDIX VII

PRODUCTION OF HIGH FRAGMENTING SHELLS BY POWDER METALLURGICAL TECHNIQUES

The fabrication of parts for general industrial application by powder metallurgy techniques as a means of achieving final shape, both with a minimum scrap loss and with a substantial reduction in the number of manufacturing operations to produce the final shape, was shown to have great economic potential several decades ago. By the nature of the process of powder compaction, the product, in general, has some porosity. Because of their porosity, steels produced by the technique of pressing and sintering into samples which are subjected to a fragmentation test produce small fragments.[1] On the other hand, this porosity also lowers the ductility and particularly the impact strength of steels compared with those of wrought steels. It has only recently been recognized that in order to obtain impact properties equivalent to conventional wrought materials, this porosity must be removed almost completely, since the properties of the product depend very sensitively on the degree of this small residual porosity.[2] The porosity in pressed and sintered parts may be greatly decreased or entirely eliminated by producing the part as a preform in a shape different from the final shape and after sintering, deform it to the desired final shape. This deformation may be done by cold deforming or by hot forging. Studies of the cold deformation of pressed and sintered preforms at Frankford Arsenal[3] have shown that materials having densities within 1 to 2 percent of theoretical

Preceding page blank

density and desirable fragmentation characteristics may be produced by this technique. These materials are being evaluated for possible use in 60- and 81-mm caliber mortar shells rather than 105- and 155-mm caliber high explosive shells, where considerably higher levels of toughness would be required than in the lower caliber mortar shells.

Hot forging of metal powder preforms, including those of automotive components, is currently being developed by a number of manufacturers. When preforms are hot forged under conditions so that material with practically no porosity is produced, its mechanical properties, including toughness and impact resistance, are equivalent to those of wrought steels. Although no work on the fragmentation characteristics of such materials has been done, it is expected that they are similar to those of wrought material of the same composition and heat treatment. An experimental investigation would be necessary in order to determine whether the process of hot forging preforms can be controlled so that materials combining desirable fragmentation characteristics and toughness and impact strength adequate for 105- and 155-mm high explosive shells can be produced.

REFERENCES

1. William O Woods, "The Potential of Powder Metallurgy as a Fragmentation Tool," AMMRC, Watertown, Mass.

2. J. S. Hirschhorn and R. B. Bargainnier, Journal of Metals. 22, No. 9, p. 21, September 1970.

3. D. Buttleman, "Controlled Fragmentation by Powder Metallurgy," D/A Project 1T062105A328 AMCMS No. 502E.11.294, Pitman-Dunn Laboratories, Frankford Arsenal, Philadelphia, Pa., July 1972.