AD-763 825

NUCLEAR SPECTROMETER STUDIES

Roger L. Ludlum, et al

Texas Instruments, Incorporated

Prepared for:

Air Force Office of Scientific Research

May 1973

DISTRIBUTED BY:

NTIS

National Technical Information Service
U. S. DEPARTMENT OF COMMERCE
5285 Port Royal Road, Springfield Va. 22151

AFOSR - TR - 73 - 1107

Program Code No. 2F10

NUCLEAR SPECTROMETER STUDIES

Phase II Final Technical Report

AD 763825

by

R. L. Ludlum, Program Manager and
Principal Investigator

Telephone: (214) 238-2011

REPORT NO. U1-853801-F

May 1973

TEXAS INSTRUMENTS INCORPORATED
Equipment Group
P. O. Box 6015
Dallas, Texas 75222

DDC
RECEIVED
JUL 26 1973
B

Effective Date of Contract: 1 January 1972
Contract Expiration Date: 31 May 1973
Amount of Contract: $402,048
Contract No.: F44620-72-C-0048

DISCLAIMER

The views and conclusions contained in this document are those of the authors and should not be interpreted as necessarily representing the official policies, either expressed or implied, of the Advanced Research Projects Agency or the U.S. Government.

Sponsored by

ADVANCED RESEARCH PROJECTS AGENCY
ARPA Order No. 1828

Reproduced by
NATIONAL TECHNICAL
INFORMATION SERVICE
U S Department of Commerce
Springfield VA 22151

UNCLASSIFIED

Security Classification

DOCUMENT CONTROL DATA - R & D

Security classification of title, body of abstract and indexing annotation must be entered when the overall report is classified

1. ORIGINATING ACTIVITY (Corporate author) Texas Instruments Incorporated Equipment Group P.O. Box 6015 Dallas, Texas 75222	2a. REPORT SECURITY CLASSIFICATION UNCLASSIFIED 2b. GROUP —

3. REPORT TITLE

Phase II Final Technical Report
Nuclear Spectrometer Studies

4. DESCRIPTIVE NOTES (Type of report and inclusive dates)

Final Technical Report, 1 January 1972 - 31 March 1973

5. AUTHOR(S) (First name, middle initial, last name)

Roger L. Ludlum
Jern W. Ellis

6. REPORT DATE 31 May 1973	7a. TOTAL NO. OF PAGES 90	7b. NO. OF REFS 1
8a. CONTRACT OR GRANT NO. F44620-72-C-0048 b. PROJECT NO. ARPA Order No. 1828 c. Program Code 2F10 d.	9a. ORIGINATOR'S REPORT NUMBER(S) UI-853801-F 9b. OTHER REPORT NO(S) (Any other numbers that may be assigned this report) AFOSR - TR - 73 - 1107	

10. DISTRIBUTION STATEMENT

Distribution is unlimited

Approved for public release;
distribution unlimited.

11. SUPPLEMENTARY NOTES TECH, OTHER	12. SPONSORING MILITARY ACTIVITY Air Force Office of Scientific Research NPP 1400 Wilson Boulevard Arlington, Virginia 22209

13. ABSTRACT

During the period of 1 January 1972 to 31 March 1973, this program was conducted to finalize design, to develop, to fabricate, and to establish operational feasibility of a gamma-ray spectrometer system for use in a nuclear radiation research program. Applicational requirements specified a man-portable, self-powered instrument for remote field data collection of gamma-ray spectra. High resolution of gamma-ray energy was of primary importance. The system was assembled using an intrinsic germanium detector in conjunction with essentially off-the-shelf, commercially available devices. The units were laboratory-tested and operational feasibility was demonstrated as most of the performance design goals were attained.

DD FORM 1 NOV 65 1473

UNCLASSIFIED

Security Classification

Program Code No. 2F10

NUCLEAR SPECTROMETER STUDIES

Phase II Final Technical Report

by

R. L. Ludlum, Program Manager and
Principal Investigator

Telephone: (214) 238-2011

REPORT NO. U1-653801-F

May 1973

TEXAS INSTRUMENTS INCORPORATED
Equipment Group
P.O. Box 6015
Dallas, Texas 75222

Effective Date of Contract: 1 January 1972
Contract Expiration Date: 31 May 1973
Amount of Contract: $402,048
Contract No.: F44620-72-C-0048

DISCLAIMER

The views and conclusions contained in this document are those of the authors and should not be interpreted as necessarily representing the official policies, either expressed or implied, of the Advanced Research Projects Agency or the U.S. Government.

Sponsored by

ADVANCED RESEARCH PROJECTS AGENCY
ARPA Order No. 1828

LIST OF SYMBOLS, ABBREVIATIONS AND ACRONYMS

ac	alternating current
ADC	analog-to-digital converter
ADCCL	analog-to-digital converter control logic
AFOSR	Air Force Office of Scientific Research
ARPA	Advanced Research Projects Agency
bpi	bits per inch
CLG	close linear gate
cm	centimeter
CO_2	carbon dioxide
Co^{60}	cobalt-60
COS/MOS	complementary symmetry/metal-oxide semiconductor
dB	decibel
dc	direct current
°C	degrees centigrade (Celsius)
°F	degrees Fahrenheit
°K	degrees Kelvin (absolute)
DFL	data format tape control logic
DoD	Department of Defense
ETC	elapsed time clock
FWHM	full width half maximum
GCD	gross-count detector
GCM	gross-count monitor
GCTHR	signal that threshold counter has reached a preselected number
Ge	germanium
GFE	Government-furnished equipment
GM	Geiger-Mueller
HTC	height-to-time converter
H_2O	water
Hz	Hertz
IRG	interrecord gap
JT	Joule-Thomson
keV	kiloelectron volt
kHz	kiloHertz
LED	light-emitting diode
LTG	live-time gate
MCL	memory-control logic
MeV	megaelectron volt
MHV	medium-to-high voltage
MHz	megaHertz
μm	micrometer
μs	microsecond
mm Hg	millimeters of mercury
MOS	metal-oxide semiconductor
MTBF	mean time between failures
MTTT	monitor time to tape signal

FOREWORD

The program for which this report was prepared was administered by the Air Force Office of Scientific Research, sponsored by the Advanced Research Projects Agency, and monitored by Colonel David Russell and Colonel Ted Jones of ARPA.

Special credit is due the following individuals for their contributions to the successful completion of the program.

Mr. J. W. Ellis	Texas Instruments Incorporated	Project Engineering
Dr. G. A. Armantrout Mr. D.O. Kubo	Lawrence Livermore Laboratory Livermore, California	Detector Research and Fabrication
Dr. R. Langsworth Mr. R. B. Currie	Air Products and Chemicals Incorporated, Allentown, Pa.	Cooling System Design, Fabrication, and Testing

ADVANCED SYSTEMS DEPARTMENT

Roger L. Ludlum

Roger Ludlum, Program Manager

TABLE OF CONTENTS

Section	Title	Page
	LIST OF SYMBOLS, ABBREVIATIONS AND ACRONYMS	iii
	FOREWORD	v
I	SUMMARY	I-1
II	INTRODUCTION	II-1
III	PRELIMINARY SYSTEM DESIGN REVIEW	III-1
	A. SYSTEM PACKAGING	III-1
	B. COMPONENT DESCRIPTION	III-1
	1. Germanium Detector	III-1
	2. Dewar Assembly	III-1
	3. Detector Cooling System	III-5
	4. Detector Bias Supply	III-6
	5. Analog-to-Digital Converter	III-6
	6. Memory System	III-7
	7. Magnetic Tape System	III-7
	8. Gross-Count Monitor	III-7
	9. Seismic Monitor	III-8
	10. Elapsed-Time Clock	III-8
	11. Control Logic	III-9
	12. Power System	III-11
	13. Readout/Control Unit	III-11
IV	TECHNICAL FINDINGS AND ACCOMPLISHMENTS	IV-1
	A. SPECTROMETER SPECIFICATIONS	IV-1
	B. SYSTEM DESCRIPTION	IV-3
	1. General	IV-3
	2. Physical Description	IV-4
	3. Components Description	IV-11
	C. SYSTEM PERFORMANCE RESULTS	IV-41
	1. Detector/System Gain and Resolution	IV-41
	2. Detector Cooling	IV-47
	3. Spectrometer System Battery Life	IV-49
V	OPERATING AND MAINTENANCE MANUAL CONTENT	V-1
VI	CONCLUSIONS	VI-1
VII	RECOMMENDATIONS	VII-1

APPENDIX

RECOMMENDED SPARE PARTS LIST

ILLUSTRATIONS

Figure	Description	Page
III-1	Preliminary Block Diagram of Spectrometer Unit	III-2
III-2	Preliminary Block Diagram of Readout/Control Unit	III-3
III-3	Preliminary Design of Dewar for Spectrometer System	III-4
III-4	Preliminary Design of Detector Cooling System	III-6
III-5	Preliminary Block Diagram of Control Logic	III-9
IV-1	Spectrometer System	IV-3
IV-2	Spectrometer System in Field Deployment Check-Out Configuration	IV-4
IV-3	Spectrometer Unit Control Panel	IV-5
IV-4	Spectrometer Unit, Case Open	IV-7
IV-5	Spectrometer Unit, Top of Chassis	IV-8
IV-6	Spectrometer Unit, Handle Side of Chassis	IV-9
IV-7	Spectrometer Unit, Hinge Side of Chassis	IV-10
IV-8	Readout/Control Unit	IV-11
IV-9	Spectrometer Unit Block Diagram	IV-12
IV-10	HP-12 Detector/Can Assembly	IV-14
IV-11	Side View Diagram of Detector HP-20	IV-15
IV-12	Detector/Dewar Assembly	IV-18
IV-13	Schematic Diagram of the Detector Cooling System	IV-19
IV-14	General Tape Format	IV-37
IV-15	Power Distribution and Control	IV-38
IV-16	Readout/Control Unit Block Diagram	IV-40

ILLUSTRATIONS (CONTD)

Figure	Description	Page
IV-17	Spectrum Correction Illustration for Background Using HP-20 Data	IV-45
IV-18	Percent-of-Total Counts Vs Address Number for Detector HP-12	IV-45
IV-19	Percent-of-Total Counts Vs Address Number for Detector HP-12	IV-45

TABLES

Table	Title	Page
IV-1	Detector HP-12 Electrical Properties at 77°K	IV-16
IV-2	Detector HP-20 Electrical Properties at 77°K	IV-16
IV-3	System Resolution Using Pulser Input	IV-42
IV-4	Spectrum Data for Detector HP-12 Operating at 77°K with a Zn^{65} Source	IV-43
IV-5	Spectrum Data for Detector HP-20 Operating at 77°K with a Zn^{65} Source	IV-44
IV-6	Current Versus Cool-Down Time for Detector HP-20, Liquid Nitrogen Immersion	IV-47
IV-7	Detector Cooling System Performance in Test Dewar	IV-48
IV-8	Spectrometer Battery Voltage as a Function of Number of Duty Cycles	IV-50

TEXAS INSTRUMENTS INCORPORATED
EQUIPMENT GROUP
13500 North Central Expressway
P. O. Box 6015
Dallas, Texas 75222

NUCLEAR SPECTROMETER STUDIES

PHASE II FINAL TECHNICAL REPORT

REPORT NO. UI-853801-F

Sponsored by Advanced Research Projects Agency
Air Force Office of Scientific Research
Contract No. F44620-72-C-0048
ARPA ORDER NO. 1828

SECTION I

SUMMARY

The purpose of Phase II in the Nuclear Spectrometer Studies program was to finalize the design, to develop and fabricate, and to establish the operational feasibility of a gamma-ray spectrometer system for use in a nuclear radiation research program. Applicational requirements specified a man-portable, self-powered instrument for collecting remote field data of gamma-ray spectra. High-resolution of gamma-ray energy was of primary importance.

To satisfy these requirements and to meet other spectrometer system design constraints, an intrinsic germanium detector was used along with essentially off-the-shelf (OTS), commercially available devices. These devices required minimum modifications for assembling the specified hardware components.

The technical results of the program are described briefly in the following paragraph.

The spectrometer system consists of the spectrometer unit (SU) and the readout/control unit (RCU). The SU can operate independently of other instruments when measuring the energy levels of gamma rays incident upon the germanium detector. This mode of operation accumulates an energy-amplitude histogram and permanently stores the data on magnetic tape. Other SU functions include monitoring and displaying gross radiation levels (count rates), detecting and discriminating seismic events, and recording the time of occurrence of these events on magnetic tape.

The RCU has no function independent from the SU. When connected via multiconductor cable to the SU, the RCU is used for testing, monitoring and displaying the SU operation, thus providing a means for examining real-time data and for system troubleshooting.

Laboratory performance tests demonstrated system gamma-ray resolution to be 3.51 keV (FWHM) at 1.114 MeV.

The SU is enclosed in an aluminum case approximately equivalent in size and configuration to a man's two-suiter suitcase and weighs 61.5 pounds. The RCU is housed in a matching case of briefcase size and configuration and weighs 23.75 pounds.

The intrinsic germanium detectors supplied to this program on a Government-furnished equipment (GFE) basis exhibited excessive leakage current, thermal resistance and total mass relative to design goals. Although other system components did not meet design goals, the final conclusion is that the overall program goal of establishing system design feasibility was successfully attained. This conclusion implies that for the purposes of DoD, with additional research and by substituting advance state-of-the-art components for OTS devices, the design goals for the system can be exceeded.

Specific recommendations for further research include correcting detector shortcomings, improving analog-to-digital converter gain, a new

or revised detector/Dewar assembly design, and various modifications to reduce the spectrometer unit weight.

The major difficulty encountered was the delay in delivery of the GFE intrinsic germanium detectors. The original delivery was scheduled for April or May 1972; the units were received by Texas Instruments on 16 March 1973. To complicate matters, the contract specified technical effort termination on 31 March 1973. It is believed that had these units been delivered on schedule, essentially all variances to design goals and all operational "bugs" would have been eliminated.

SECTION II
INTRODUCTION

The total program, Nuclear Spectrometer Studies, included two technical research effort phases. Phase I involved performing a preliminary gamma-ray spectrometer system design study for use in a nuclear radiation research program.* Based on Phase I findings, Phase II was directed toward developing and fabricating the system and establishing operational feasibility through laboratory testing.

Applicational considerations evolved design requirements for a man-portable, self-powered instrument for remote area, field data collection of gamma-ray spectra. The design featured high-resolution performance and required the use of an intrinsic germanium detector capable of being repeatedly cycled between ambient field temperatures and cryogenic operating temperatures. After activation in the field, unattended operation was required for a period of up to 90 days. During this deployment period, the operational scenario required the sensing of gross-radiation levels and seismic events in addition to accumulating and storing two gamma-ray spectra. The final constraint imposed on the overall design was that system components, excluding the germanium detector, were to be essentially off-the-shelf devices requiring minimum modification.

Preliminary system specifications resulting from the Phase I study* are as follows:

- Source signal — the output signal of an intrinsic germanium planar detector with 20-pf maximum capacitance and less than 0.5 na leakage current at 145°K temperature.

*Ludlum, R. L. and J. W. Ellis, 1971, Phase I final technical report, nuclear spectrometer studies (U), Rpt. prepared for AFOSR Contract No. F44620-71-C-0125 sponsored by ARPA Order No. 1821, 18 Nov (SECRET)

- Energy range — 0.1 MeV to 2.5 MeV
- Resolution — 3 keV FWHM at 1.17 MeV
- Linearity
  - Differential, ±2 percent of upper 99 percent of spectrum
  - Integral, ±0.02 percent
- Conversion gains — 4,096 channels for full scale
- Pulse analysis time
  - Threshold, 0.1 MeV ±10 percent - 3 μs
  - Full scale, 2.5 MeV ±10 percent - 259 μs
- Conversion clock rate — 16 MHz
- Count rate — 10^4 counts/s maximum
- Channel width — 0.587 keV/channel
- Zero offset stability — 5×10^{-3} channel/°C
- Gain stability — 15 ppm/°C
- Accumulation time — 30-minute clock time
- Live time — to be accumulated in memory and recorded with the data
- Time clock data — elapsed time from system initiation
- System dead time — (N/16 + 20) μs where N = channel address
- Memory
  - Counts/channel, 2^{18}
  - Number of channels, 4,096
  - Data format, binary - 18 bits
  - Address format, binary - 12 bits

Section III presents a brief review of the preliminary system design to provide the technical background for the Phase II findings and give insight into the overall program research sequence. The details of Phase III technical findings and accomplishments are given in Section IV. The operating and maintenance manual for the spectrometer system is described in Section V, and conclusions and recommendations are provided in Sections VI and VII. Appendix A is a recommended spare parts list.

SECTION III

PRELIMINARY SYSTEM DESIGN REVIEW

A. SYSTEM PACKAGING

The preliminary system design consisted of two units, the spectrometer unit (SU) and the readout/control unit (RCU). The spectrometer contained all components shown in Figure III-1 and was man-portable, measuring approximately 19 by 14 by 7 inches and weighing approximately 45 pounds. The RCU contained the components shown in Figure III-2, measured approximately 13 by 10 by 6 inches and weighed approximately 20 pounds.

B. COMPONENT DESCRIPTION

1. Germanium Detector

The gamma-ray spectrometer detector was to have been of high-purity (intrinsic) germanium in a planar design with approximate dimensions of 1-cm thickness and 5-cm^3 volume. When mounted in a Dewar to provide a vacuum environment and operating at 145 °K, the detector assembly was to have had a 20-pf maximum capacitance and less than 0.5-na leakage current.

2. Dewar Assembly

The Dewar (Dewar flask) preliminary design is shown in Figure III-3. The planned function of this unit was to provide the detector an evacuated environment with low heat leakage and to maintain proper detector-to-cryostat thermal coupling. The design specified No. 7052 borosilicate glass for the Dewar walls. The inside surface of the outer envelope (A) was aluminized to reduce thermal radiation to inner components. There was approximately 0.05 aluminum surface emissivity. Tubulation was provided on the envelope for attaching a preliminary evacuation pump at (B) and for mounting a Varian VacIon pump (C). The envelope was sealed to the Dewar base (D) with a soldered ring joint (E).

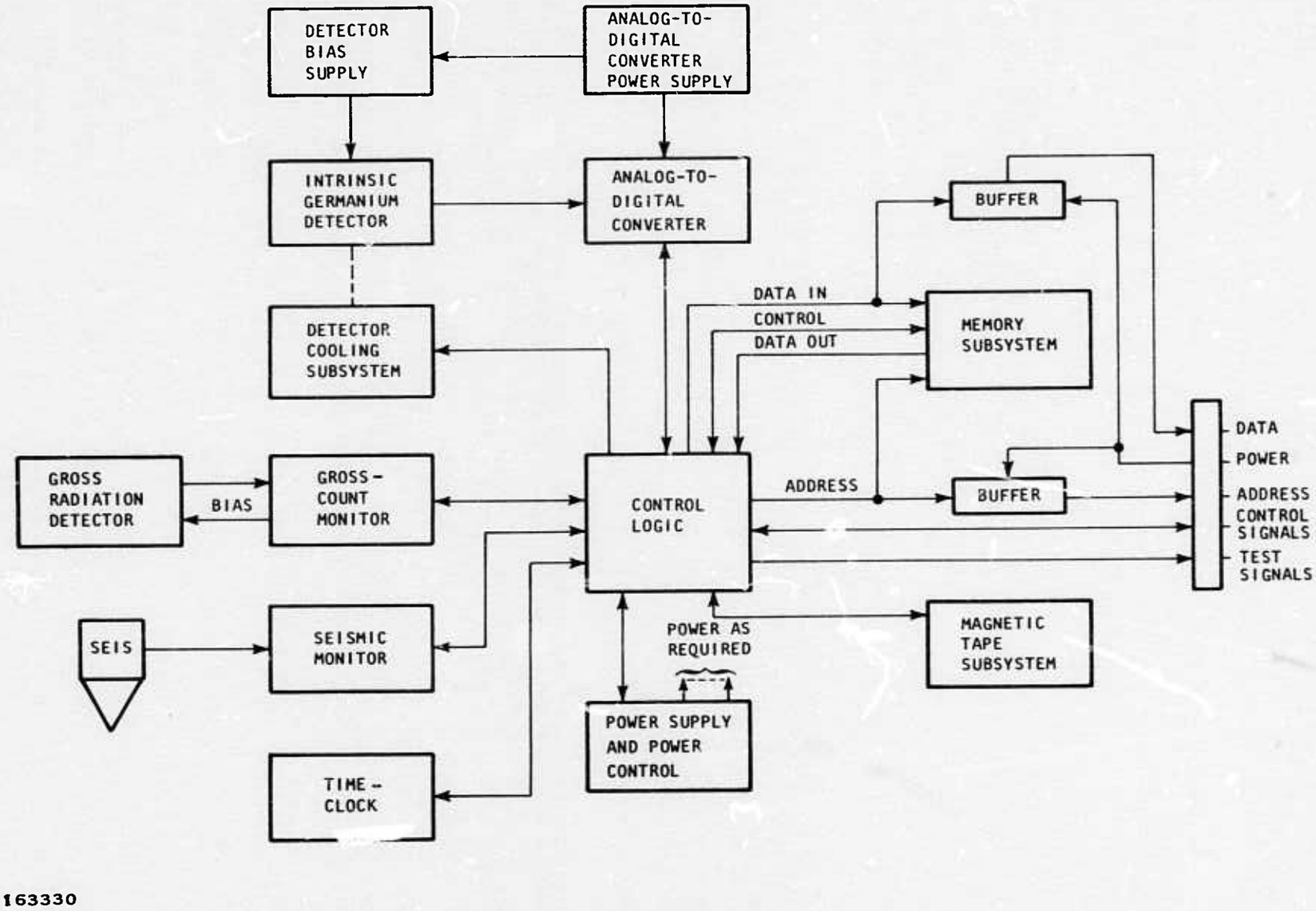

Figure III-i. Preliminary Block Diagram of Spectrometer Unit

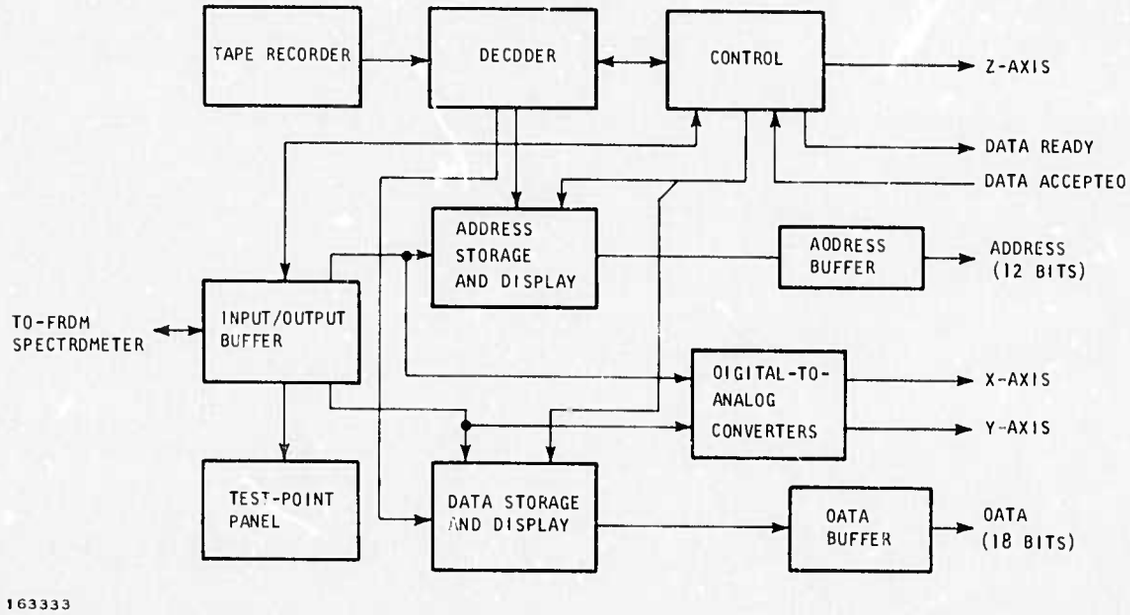

Figure III-2. Preliminary Block Diagram of Readout/Control Unit

The Dewar base consisted of a Kovar (TM) seal (F) for passing electrical leads through the Dewar wall, a mounting flange (G) for the cryostat, and mounting rings (H) for the cryostat chamber (I) and detector pedestal (J).

The detector assembly consisted of the Ge detector (K) enclosed in an evacuated and sealed (cold-welded) aluminum can (L). The base of the can (M) was copper or aluminum and flanged to attach it to the Kovar plate (N) with spring-loaded screws (O). Sheets of indium (P) were used to ensure maximum thermal contact between surfaces. A pressure spring (Q) having the dual purpose of holding the detector in place and providing electrical contact with the upper surface of the detector was to be used. A light tight-vacuum feedthrough (R) provided lead access through the can.

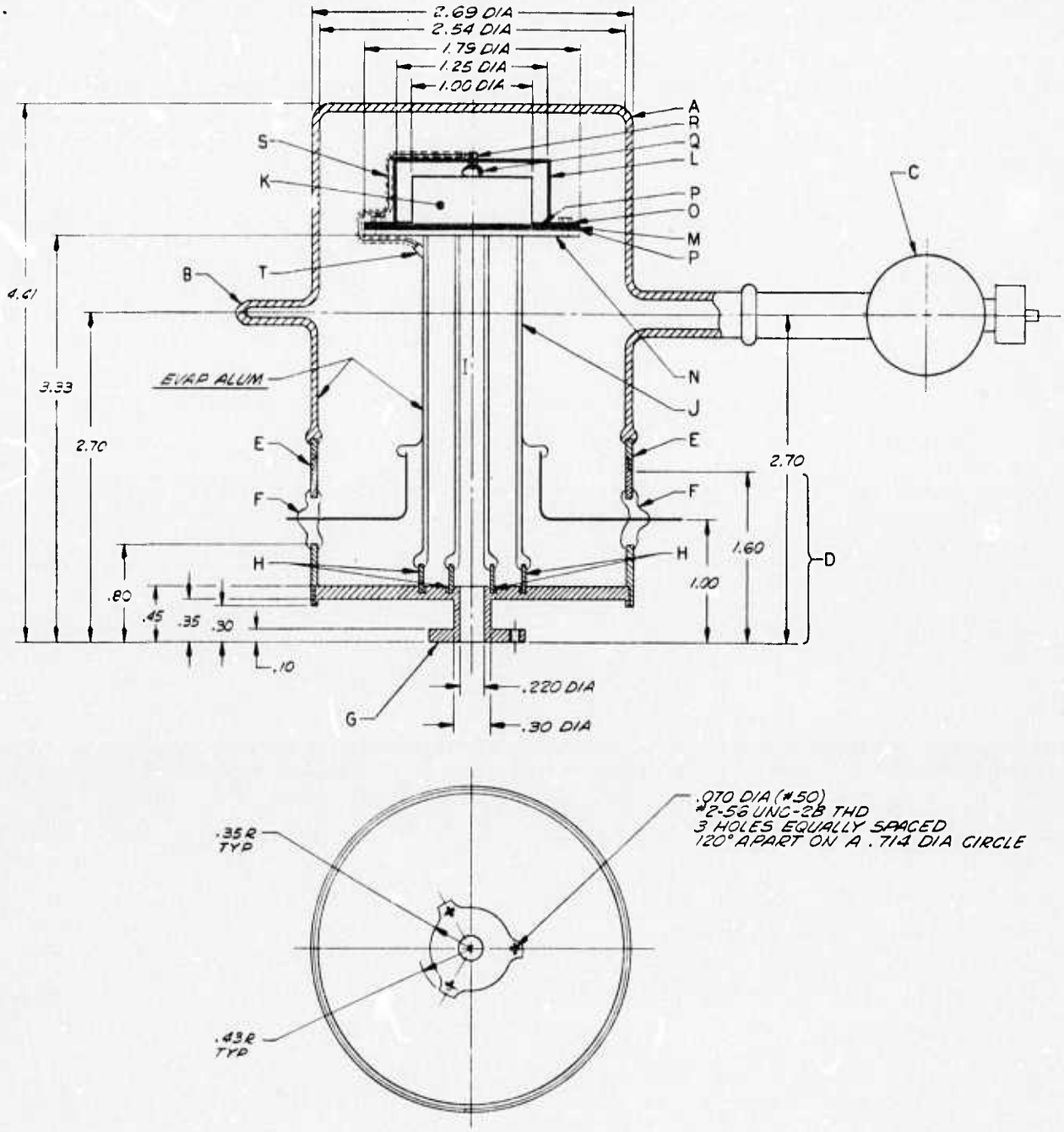

163331

Figure III-3. Preliminary Design of Dewar for Spectrometer System

A coaxial cable (S) with the shield attached to the can served as the electrical conductor from the detector assembly to the Dewar leads at point (T). Eight platinum leads were embedded in the Dewar pedestal wall (J) to facilitate testing and to serve as spares in case of lead-terminal damage.

When finally assembled and evacuated to a pressure of approximately 10^{-7} Torr (mm Hg), the Dewar was to maintain a near-vacuum environment for a period of 3 to 60 months. The Vaclon pump was to operate continuously, except during field tests, to maintain the 10^{-7} Torr pressure and to serve as a pressure indicator.

3. Detector Cooling System

The detector cooling system specified in the preliminary design was based on the principle of the demand-flow Joule-Thomson (JT) cryostat supplied with high-pressure gas which functions as the refrigerant. A preliminary schematic diagram of the JT cooling system is shown in Figure III-4. The system was composed of the major components listed.

- Demand flow cryostat
- High-pressure flexible pipe
- Gas storage bottles
- Latching solenoid start valves
- Nonresealable safety relief valves
- Check valves
- Fill valves
- Filter/absorber

The system was to occupy a 2.5 by 6 by 12 inch envelope, except for the cryostat which was to be installed in the Dewar.

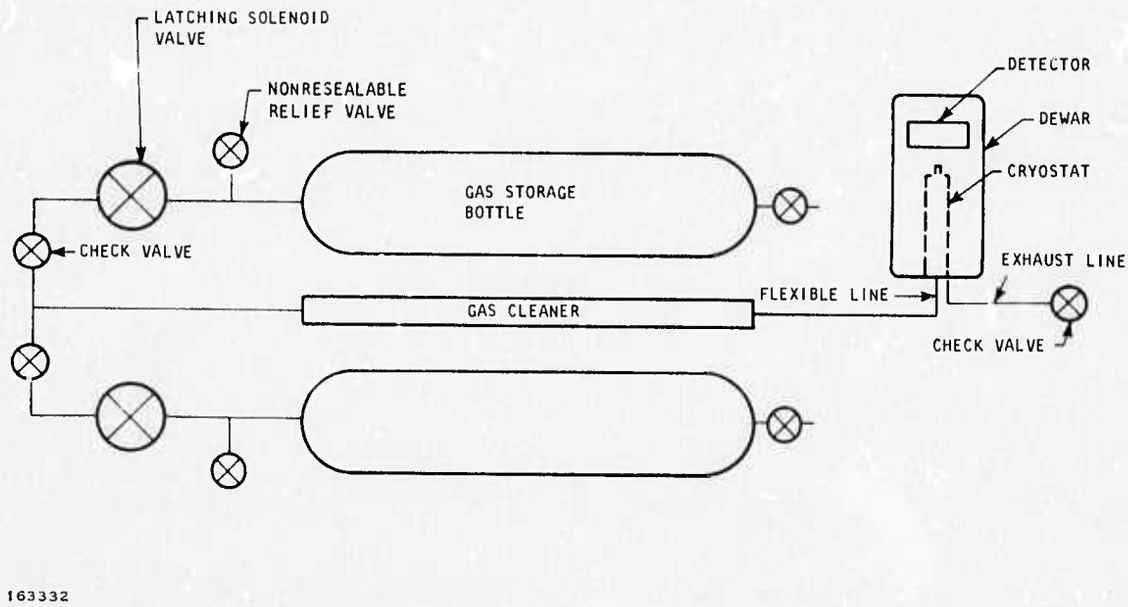

Figure III-4. Preliminary Design of Detector Cooling System

4. Detector Bias Supply

The detector bias supply was to be specifically designed for use with germanium detectors to provide a truly low-noise bias source. The 500- to 2,500-Vdc supply output range was to be adjustable with a lockable potentiometer.

The full-voltage output current was to be 100 na, nominally. The specifications were ±1.0 from ±0 to 55°C stability and regulation and ±10 percent system supply voltage drift. The ripple was to be less than 10 μV at an ≈20 kHz carrier frequency.

5. Analog-to-Digital Converter

The analog-to-digital converter (ADC) consisted of a charge-sensitive preamplifier, a postamplifier/offset gate, a height-to-time converter (HTC), and a clock gate. The detector output was dc-coupled to

the preamplifier input. The ADC converted low-level charge signals produced by the gamma-ray interactions in the germanium detector into a pulse. The pulsewidth was linearly proportional to the charge signal amplitude and thus to the energy deposited in the germanium crystal detector.

6. Memory System

A complete functional memory using dynamic metal-oxide semiconductor (MOS) storage elements was selected for spectrum data accumulation. A unit was commercially available which was contained on a single printed-circuit card and which had all the necessary controls to maintain and sequence the storage elements.

The memory array consisted of 72 dynamic MOS 1,024-bit elements arranged in four equal groups, each providing a capacity of 4,096 18-bit words. The system was completely compatible with transistor-transistor logic (TTL).

7. Magnetic Tape System

A magnetic tape recorder was selected to provide long-term data storage with no power consumption. A 2-W power requirement and a 120-$inch^3$ volume was found in the preliminary study to be adequate for the recorder and its associated electronics. A modified Philips-type cassette recorder was anticipated for this component. With this type of unit, sufficient tape could be available for recording the background and the source spectra three times and still have space for recording 100 seismic event occurrence times.

8. Gross-Count Monitor

The detector selected for gross-counting the background radiation level was a halogen-quenched Geiger-Mueller (GM) tube. The output pulses from this sensor were to be amplified and integrated and the level detected by existing low-power requirement integrated circuits.

Although existing Geiger counters normally required 50-mW power for operation, it was anticipated that the power drain of the gross-count monitor would be 10 mW or less in the final design.

This unit was to be used for monitoring radiation background and for actuating a spectrum accumulation when the gross count exceeded a preset threshold level. The actuating mode was to be initialized by a signal from the seismic monitor.

9. Seismic Monitor

In the preliminary design, this subsystem consisted of a small geophone which had a natural resonance frequency between 1 and 10 Hz, followed by an amplifier and threshold circuit. The threshold was adjustable to suit spectrometer location and event size. Once the threshold was exceeded, the gross-count monitor and tape recorder were to have been turned on and the time of the seismic event recorded. The seismic monitor was powered separately from the main system.

10. Elapsed-Time Clock

The low-power time clock consisted of a 16,384-Hz crystal, a binary divider chain, and a parallel-to-serial shift register. The time clock was to have been activated and set to zero when starting to accumulate the background spectrum. Elapsed time was accurate to within 1 minute.

When the seismic monitor threshold was exceeded, the time clock data were recorded on the magnetic-tape recorder. The time clock data were transferred to the parallel-to-serial register and shifted through the register by the binary divider chain 16-Hz output. This allowed the event time to be stored and buffered so that the time clock output would not offset the stored information if it changed during this period.

Complementary symmetry/metal-oxide semiconductor (COS/MOS) circuitry were to be used where possible to achieve low power consumption. Because of its low power drain, the time clock, like the

seismic monitor, was to be powered separately from the main power supply.

11. Control Logic

The control logic (Figure III-5) consisted of interdependent analog-to-digital converter (ADC) control logic, memory control logic (MCL), and system control logic (SCL).

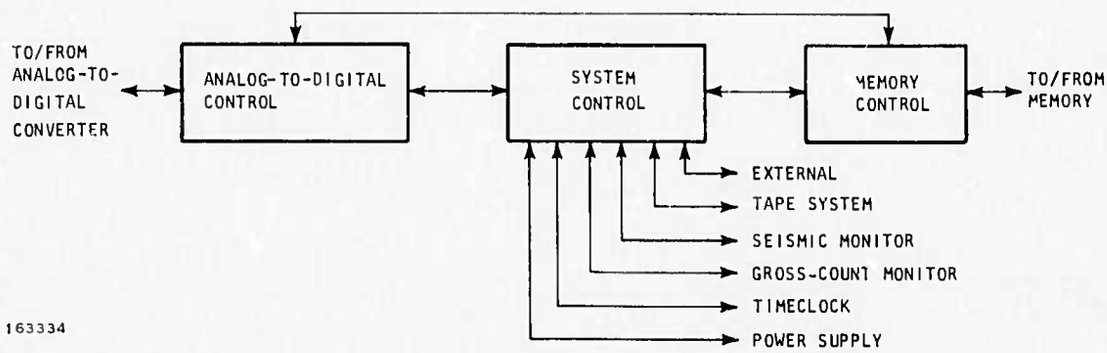

Figure III-5. Preliminary Block Diagram of Control Logic

a. ADC Control Logic

The ADC control logic digitized the output of the ADC with the 16-MHz clock. This yielded 4,096 full-scale channels and a single-channel width of $\approx$ 0.587 keV. The resulting digital number was a 12-bit word representing the address in memory, the contents of which were to be incremented.

Upon receipt of the ADC output, the ADC control generated a signal to the ADC to close the linear gate. After the ADC output was digitized, the ADC control generated a request for a memory read/modify/write cycle. During the memory cycle, the address specified by the ADC was read and the contents of the address was incremented by one and restored in the same address.

After the memory cycle, the ADC control allowed the linear gate to be reopened and generated a 20-μ s time window. If a new input to the HTC occurred during the window, the reset signal was generated, increasing the HTC capacitor discharge current so that it was rapidly discharged. During this time, the linear gate was held closed for a fixed "dead time" which was short compared to the full-scale discharge time and no memory cycle was requested. The ADC control logic also generated a signal indicating when the system was live.

b. MCL Control Logic

The MCL primarily interfaced the memory system with the rest of the system. The MCL accepted signals from the ADC control and the system control logic and determined the particular cycle required of the memory (read, write, or split cycle).

The MCL generated signals to transfer the memory output data into the data register and, in the case of a split cycle, incremented the data register before its contents were restored into the memory. If a read cycle was being performed, the data register was not incremented, and if a clear/write cycle was being performed, the data register was always cleared so that all zeroes were stored in each address. The memory control logic generated a memory busy signal while any memory cycle was being generated.

c. SCL Control Logic

The SCL controlled function sequences and terminated certain ones. The function sequences and/or operations were determined by monitoring signals such as the seismic monitor, the gross-count monitor, and the time clock outputs. These outputs indicated to the SCL when various subsystems were to be turned on. The primary functions of the SCL were background spectrum accumulation, standby monitor mode, source spectrum accumulation, and tape-to-memory mode, plus a memory readout

mode initiated by the external readout unit.

12. Power System

The primary battery power requirement was generally considered as the following three separate sequential steps:

- A background record was made which consumed as much as 30 W power in 30 minutes.
- A period as long as 60 days followed immediately during which as much as 30 Wh might be consumed.
- Another record, consuming as much as 30 W in 30 minutes followed immediately.

This assumed that the seismic monitor and time clock were powered separately.

A lead battery with a gelled electrolyte was found to be an acceptable power source for this requirement. It weighed 13 pounds and occupied about 316 inches with considerable reserve capacity. This assumed an average temperature no higher than 100°F.

It was anticipated that the battery would consist of a string of four 6-V units. Taps were to be made at the various junctions to allow series regulators to be used to provide the desired supply voltages. These regulators were to be connected to the batteries via complementary compound-connected transistors, allowing them to be electrically connected or disconnected.

13. Readout/Control Unit

In the preliminary system, this unit had the primary functions of providing a means to monitor spectrometer operation in a field deployment operation and controlling the spectrometer and readout data in testing (checkout) activities. It contained an ac/dc power supply, memory address and data display lights, and digital-to-analog conversion circuitry for

providing analog data outputs for accumulated spectra oscilloscope display. Control circuitry was provided to generate signals to initiate spectrometer functions such as spectrum accumulation, memory readout, memory clear, and tape-to-memory.

SECTION IV

TECHNICAL FINDINGS AND ACCOMPLISHMENTS

A. SPECTROMETER SPECIFICATIONS

The spectrometer unit measures the energy of gamma rays by converting the detector output signal amplitude into an equivalent digital number. It accumulates an energy-amplitude histogram within the following constraints and final design goals:

Detector	Intrinsic germanium with maximum capacitance of 20 pf and leakage current of < 0.5 na at 145°K
Energy range	0.1 MeV to 2.5 MeV
System resolution	≤ 3 keV FWHM at 1.17 MeV
Linearity	
Differential	±0.2 percent over upper 99 percent of spectrum
Integral	±0.02 percent
Conversion gain	4096 channels for full scale
Single-channel width	0.587 keV/channel
Zero-offset stability	1×10^2 channel/°C
Gain stability	25 ppm/°C
Conversion clock frequency	16 MHz
Input-pulse analysis time	
Threshold	0.1 MeV ±10 percent = 3 μs
Full scale	2.5 MeV ±10 percent = 259 μs
Data accumulation time	30 minutes elapsed time
System dead time	(N/16 + 20) μs where N = channel address

Live-time data	Live-time data with 0.5 s resolution accumulated in address 0 of memory and recorded with data
Real-time data	Elapsed time from beginning of background-spectrum accumulation is 17-bit binary representation of accumulated minutes with resolution of 1 minute
Data buffer memory	
Counts/channel	$2^{18} - 1$ (18 bits)
Number of channels	4,096
Data format	Binary, 18 bits, parallel
Address format	Binary, 12 bits, parallel
Seismic-signal monitor	Variable detection level over 90-dB range in 6-dB steps; Time of seismic occurrence is recorded on magnetic tape up to total of eight events
Gamma-ray intensity monitor	Geiger-Mueller tube-type measuring system with variable threshold setting based on background level as displayed; output activates spectrum accumulation/record cycle
Permanent/long-term data storage	Magnetic tape with 2.8×10^6 bits capacity
Power system	Battery pack plus power sequence control and regulation; maximum voltages available, +14 and -14 Vdc; batteries, rechargeable gelled-electrolyte types
Environmental	
Temperature	0°C to 50°C
Humidity	Up to 85 percent without condensation
Vibration	Equivalent of 3 hours of aircraft or 1,000 miles of truck transportation while tied down per MIL 810B

Mechanical

Dimensions	≈ 19 by 14 by 7 inches
Weight	45 pounds maximum
Portability	Man-portable by hand-carrying

B. SYSTEM DESCRIPTION

1. General

The spectrometer system consists of the SU and the RCU (Figures IV-1 and IV-2). The SU can operate independently of other instruments when measuring the energy levels of gamma-rays incident upon the germanium detector. This mode of operation accumulates an energy-amplitude histogram and permanently stores the data on magnetic tape. Other SU functions include monitoring and displaying gross radiation levels (count rates), detecting and discriminating seismic events, and recording the time of occurrence of these events on magnetic tape.

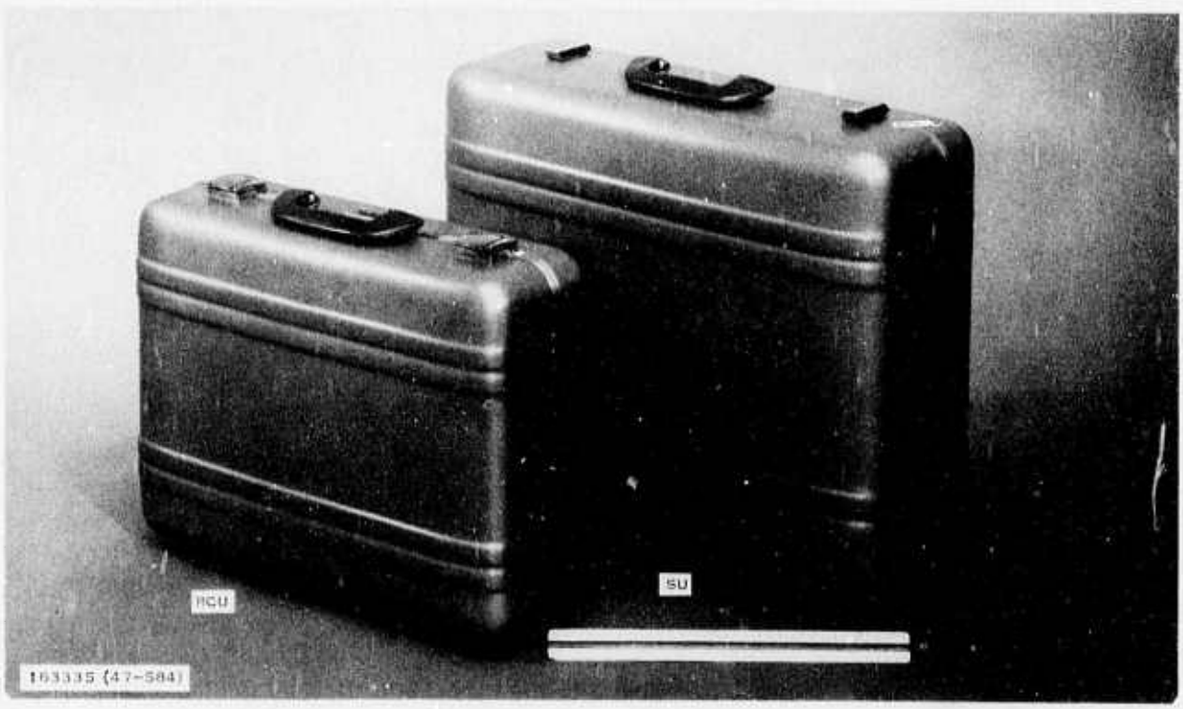

Figure IV-1. Spectrometer System

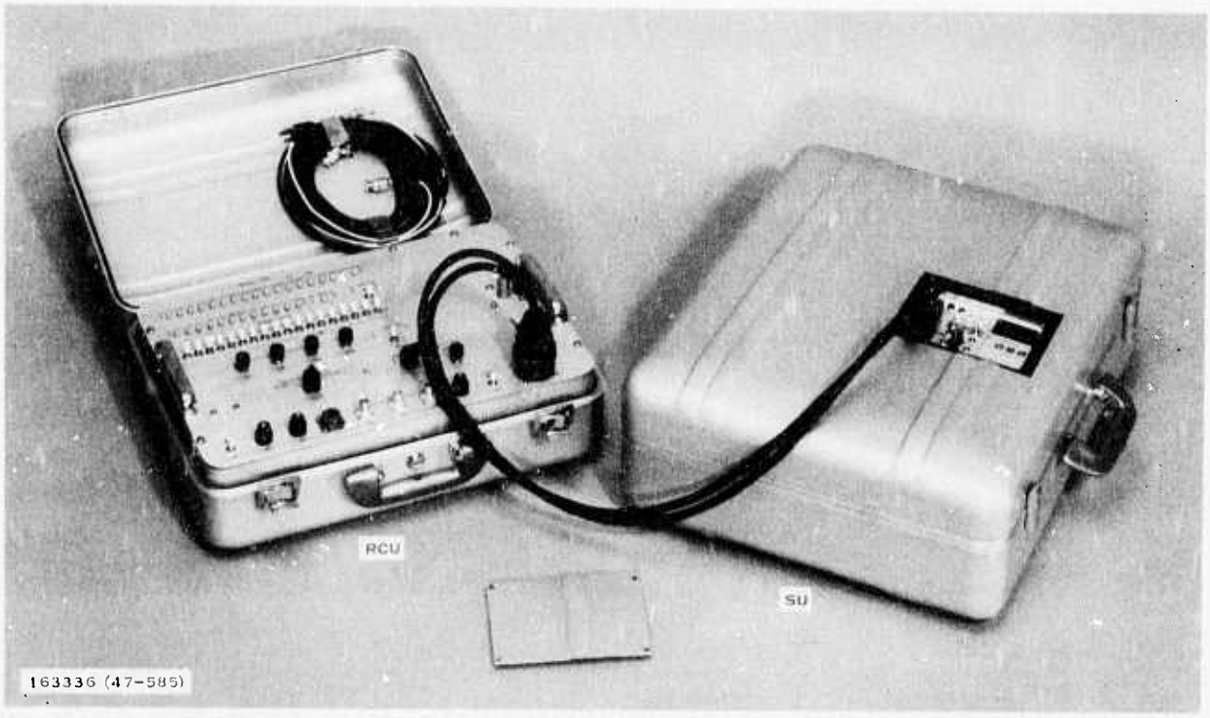

Figure IV-2. Spectrometer System in Field Deployment Check-Out Configuration

The RCU has no function independent from the SU. When connected via multiconductor cable to the SU, the RCU is used for testing, monitoring, and displaying the SU operation, thus providing a means for real-time data examination and system troubleshooting.

Each unit has its own power system. The RCU can operate from ac power or battery; and the spectrometer unit is normally operated from its rechargeable batteries, but the battery pack can be disconnected and replaced by a laboratory power supply (positive and negative voltage).

2. Physical Description

a. Spectrometer Unit

The spectrometer unit is enclosed in an aluminum instrumentation case. An external access control panel (Figure IV-3) contains all function control switches, the gross-count monitor display and threshold-level

setting switches, test points, fuses, and the connector for the RCU cable. The weight of the SU is approximately 61.5 pounds; and the external case dimensions, including handle, feet, hinge, and latches, are 8 by 18-1/4 by 21-1/8 inches.

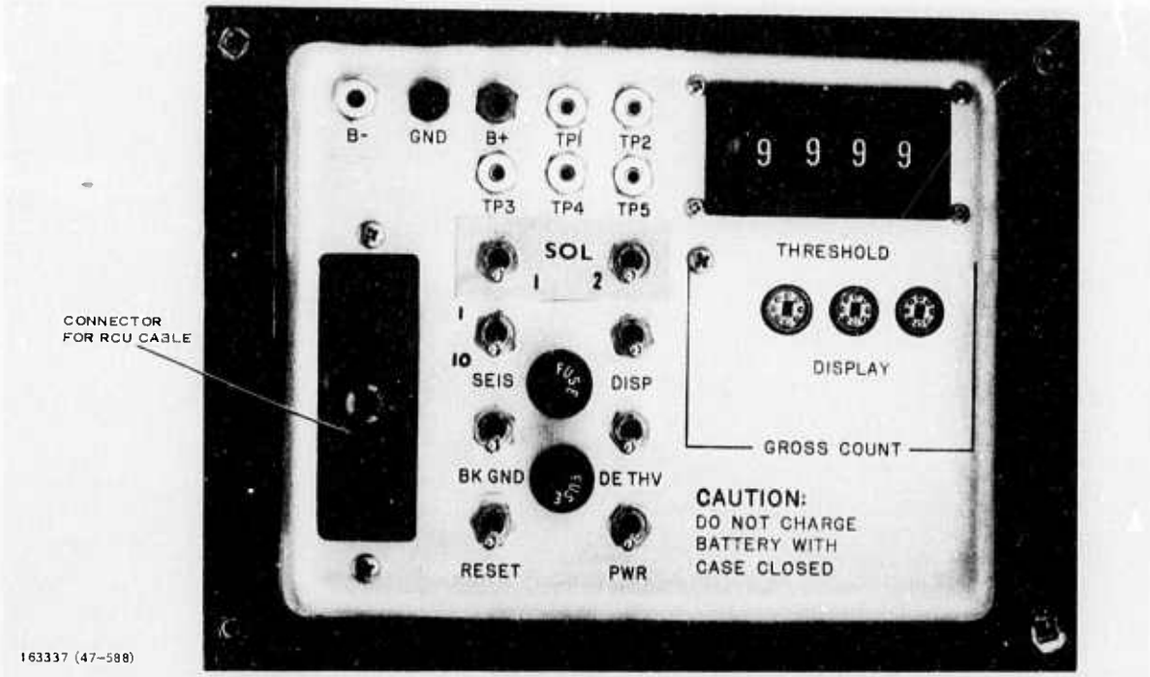

Figure IV-3. Spectrometer Unit Control Panel

The SU consists of the following components, assemblies, and subsystems:

- Intrinsic germanium detector/Dewar assembly
- Detector cooling system (Joule-Thomson type)
- Detector high-voltage bias supply
- Analog-to-digital converter (Wilkinson type)
- Memory system
- Magnetic-tape system
- Gross-count monitor

- Seismic monitor
- Elapsed-time clock
- Control logic
- Data formatter/tape controller
- Power system

The internal arrangement of components was designed with regard to anticipated operational position (lying on side with detector near upper surface and with control panel accessible in upper surface) and to the following additionally significant factors (Figures IV-3, IV-4, IV-5, IV-6, and IV-7).

- Detector/Dewar assembly positioned in corner of case and with maximum separation from battery pack to minimize radiation shielding
- Minimum separation between Dewar and cooling system to maximize cooling efficiency
- Minimum separation between Dewar and analog-to-digital converter and high-voltage detector bias supply to maximize system performance effectiveness
- Tape recorder positioned for convenient access to tape cassette location

b. Readout/Control Unit

This unit (Figure IV-8) is housed in a matching aluminum instrumentation case. Access to the control panel is obtained by opening the cover to the case. All function control switches, display lights, fuses, and cable connectors are located on this panel. The weight of the RCU is 23.75 pounds (including cables) and the external case dimensions are 6-3/8 by 14-1/4 by 18 inches.

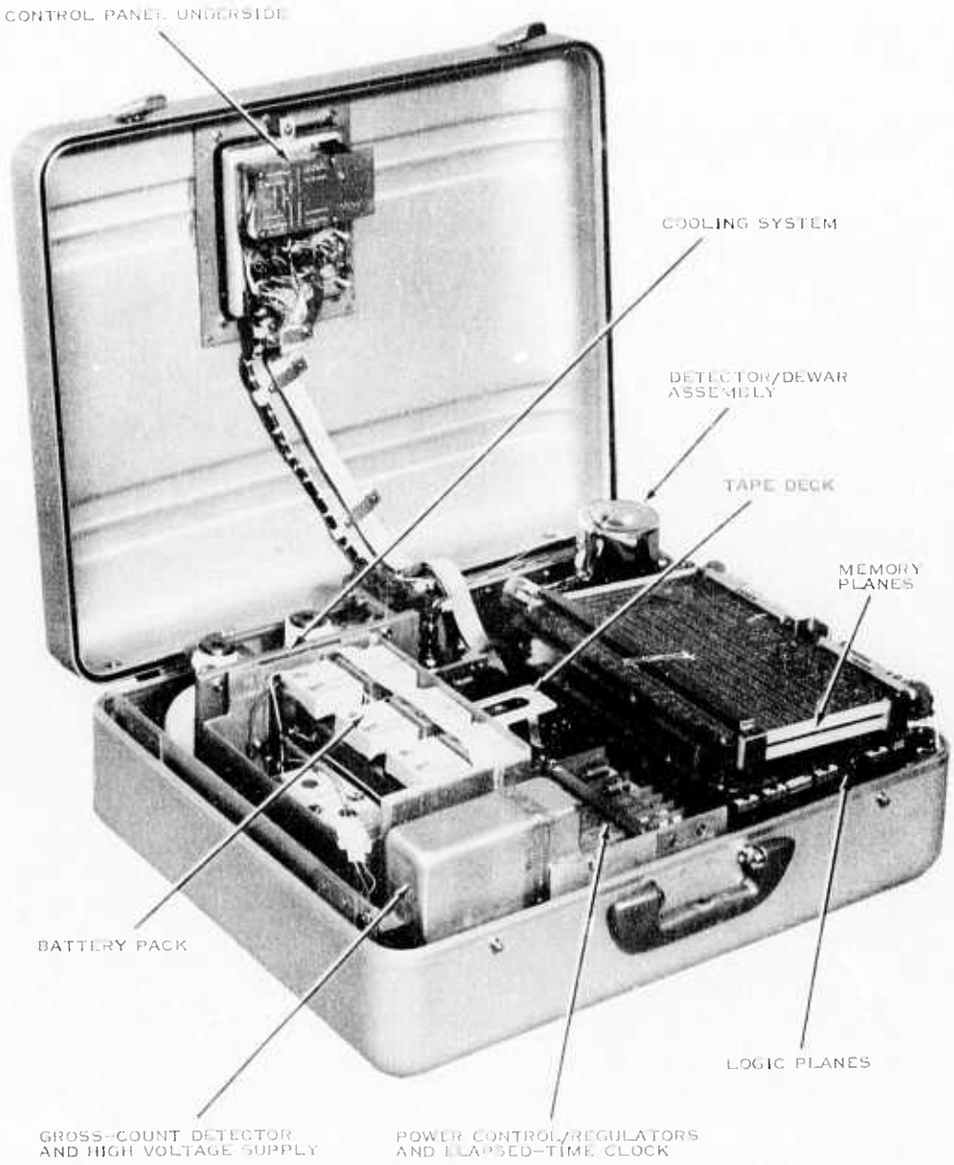

163338 (47-590)

Figure IV-4. Spectrometer Unit, Case Open

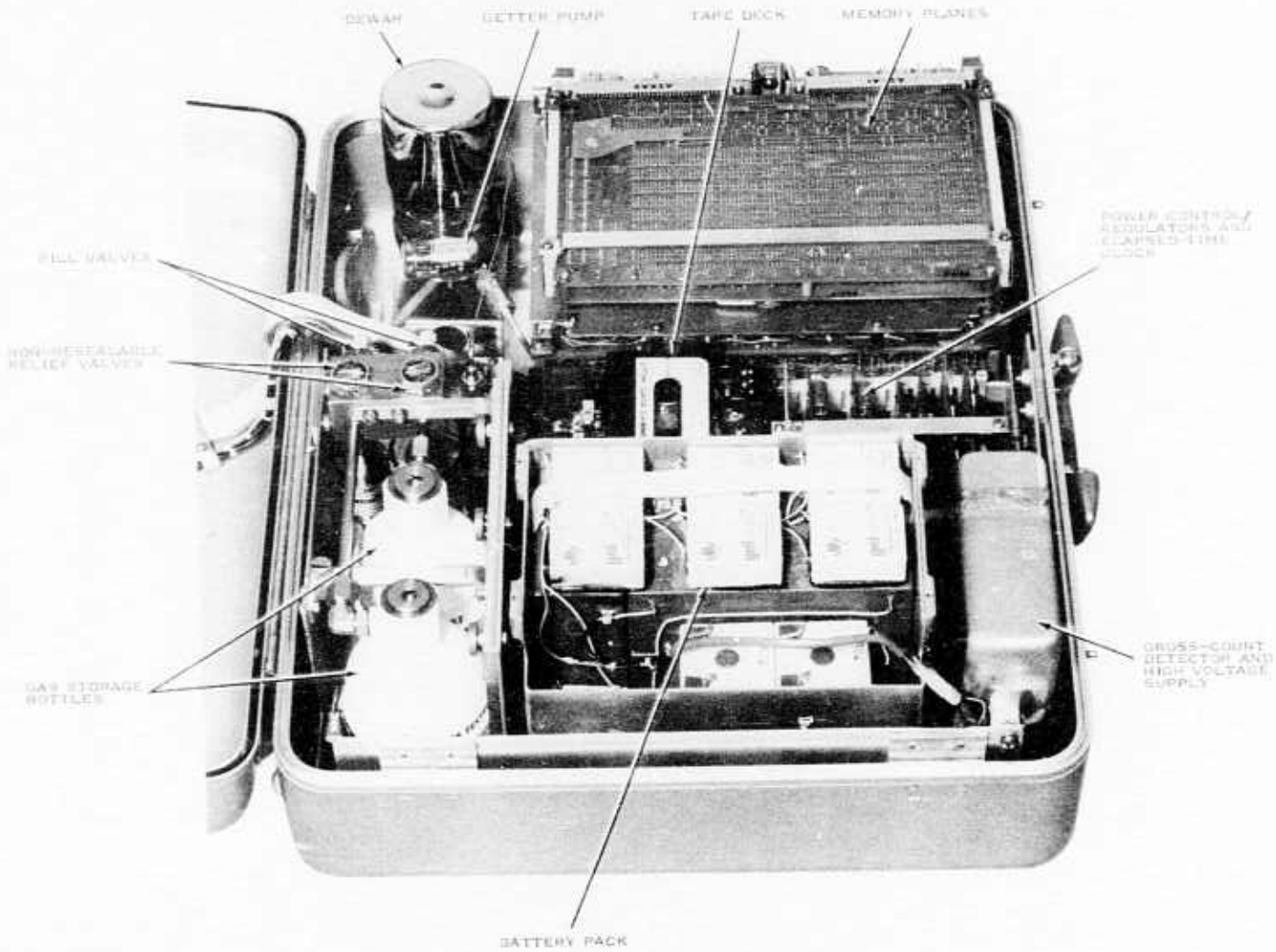

Figure IV-5. Spectrometer Unit, Top of Chassis

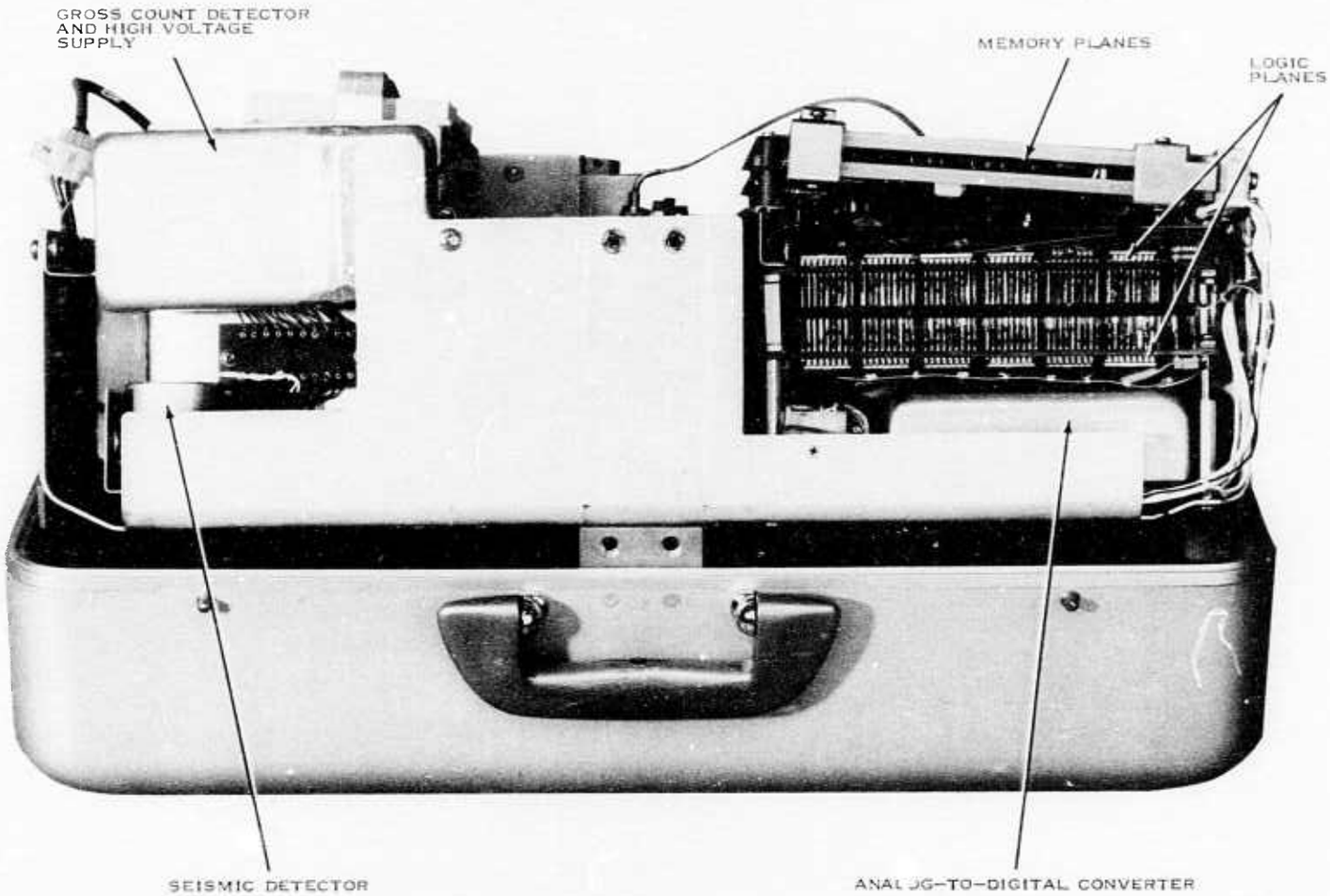

163340 (47-592)

Figure IV-6. Spectrometer Unit, Handle Side of Chassis

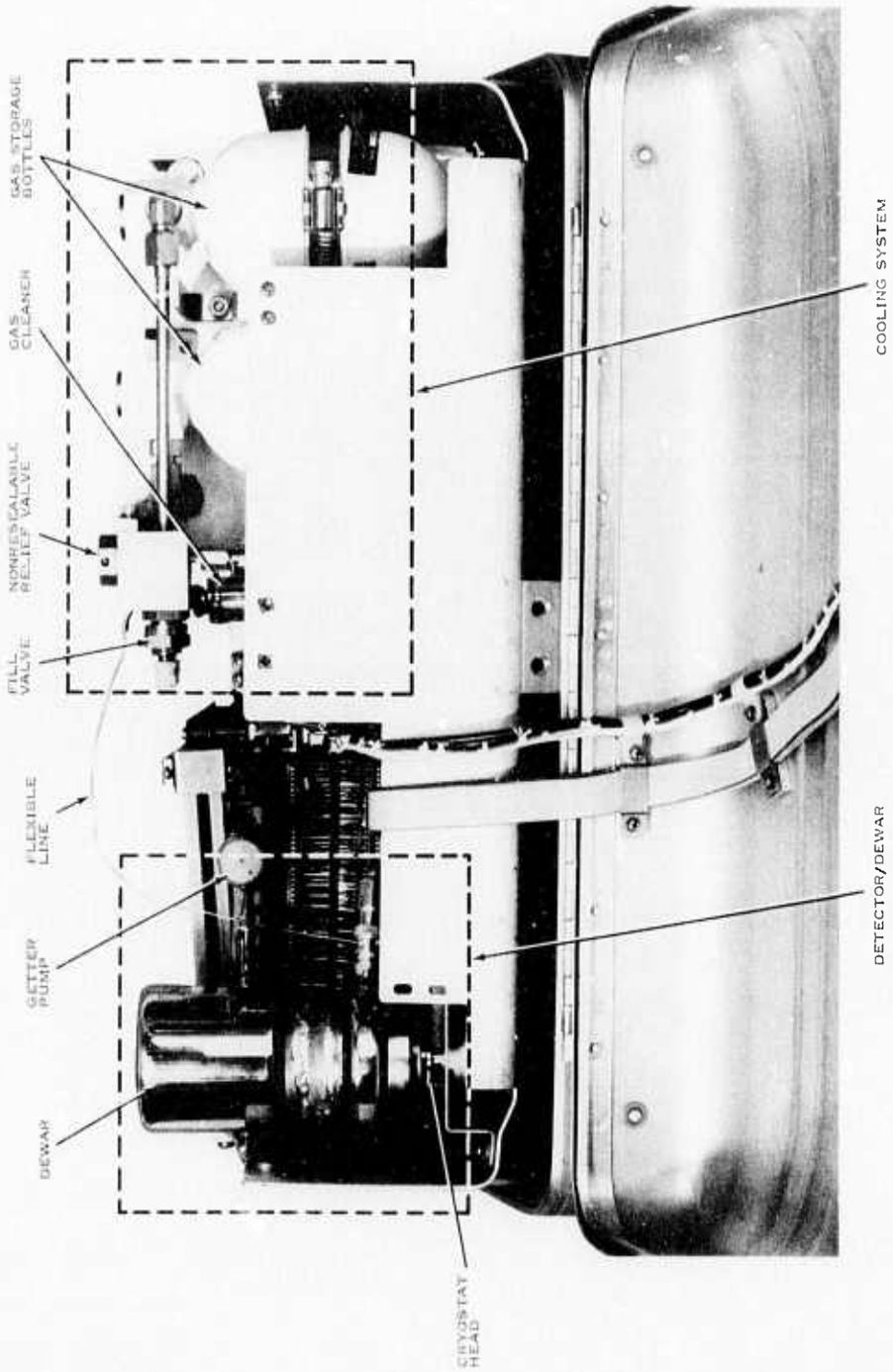

Figure IV-7. Spectrometer Unit, Hinge Side of Chassis

Figure IV-8. Readout/Control Unit

3. Components Description

The following subsections describe the various physical and functional details of individual components within the spectrometer system. Figure IV-9 is a block diagram of the SU.

a. Spectrometer Unit

1) Germanium Detector

a) General

Two intrinsic germanium detectors (No. HP-12 and HP-20) were supplied with the system. Each detector is of planar configuration (that is, approximately 1 cm thick with a face surface area of about 5 cm.

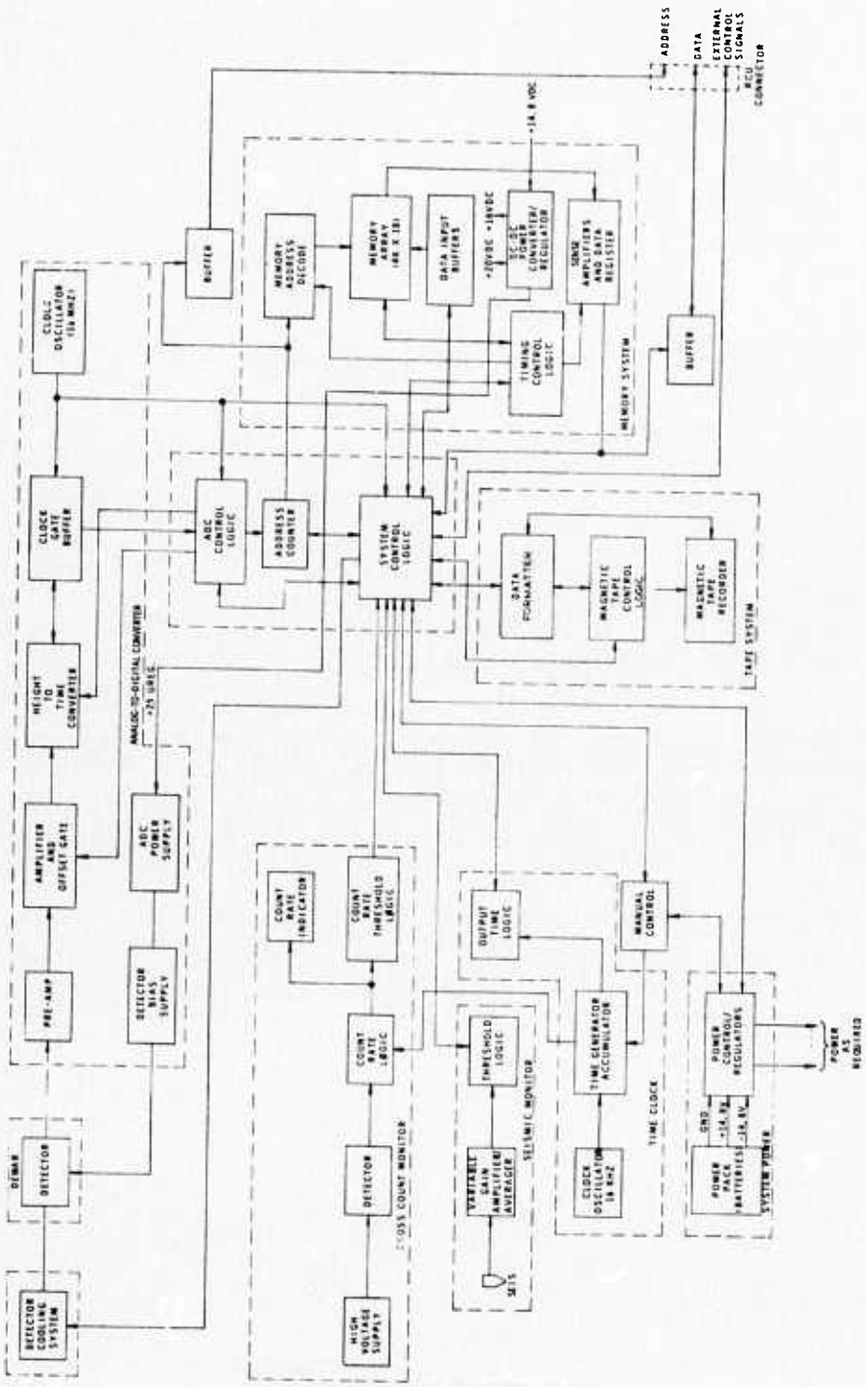

Figure IV-9. Spectrometer Unit Block Diagram

163343

Before final assembly, the planar configuration of detector HP-20 was modified to a guard-ring configuration. Each detector is mounted in an evacuated copper and aluminum can with an electrical, vacuum- and light-tight feedthrough connector. In addition, detector HP-12 is mounted in an evacuated glass and metal Dewar for operation with the Joule-Thomson cooling system. Detector HP-20 may be operated while immersed in a cooling medium such as liquid nitrogen or argon which maintains the detector temperature below 150°K.

When the detector is cooled to cryogenic temperatures and reverse-biased with sufficient voltage (300 to 400 Vdc) to obtain significant or complete depletion, it functions as a reverse-biased diode which breaks down when a gamma-ray passes through the body of the detector. This breakdown supplies a charge pulse to the analog-to-digital converter preamplifier.

These detectors were provided to Texas Instruments on a GFE basis by Lawrence Livermore Laboratory, Livermore, California. Details regarding physical and electrical properties of these detectors are given in the following subsections.

b) Physical Description

(1) Detector HP-12

This detector has a planar configuration with dimensions 1 cm thick and approximately 5-cm^2 surface area of face dimensions (Figure IV-10). It is mounted in an evacuated copper and aluminum can. The canning procedure seals the lid to the bottom with a cold-weld junction and simultaneously compresses the coil spring which holds the detector in place and serves as an electrical contact. Between the detector and the bottom of the can is a perforated indium envelope containing molecular sieve rods. When a heatsink (that is, liquid nitrogen) is applied to the bottom surface of the can, the rods

cool faster than the detector and draw gases away from the detector and trap them temporarily. This action minimizes contamination of the sides of the detector and increases the lifespan of the unit. When the temperature of the assembly is allowed to return to ambient, most of the gases return to the free space around the detector. Detector bias voltage (+ polarity) is applied through the center conductor of the connector in the lid of the can. The detector is grounded through the indium envelope in contact with the bottom of the can.

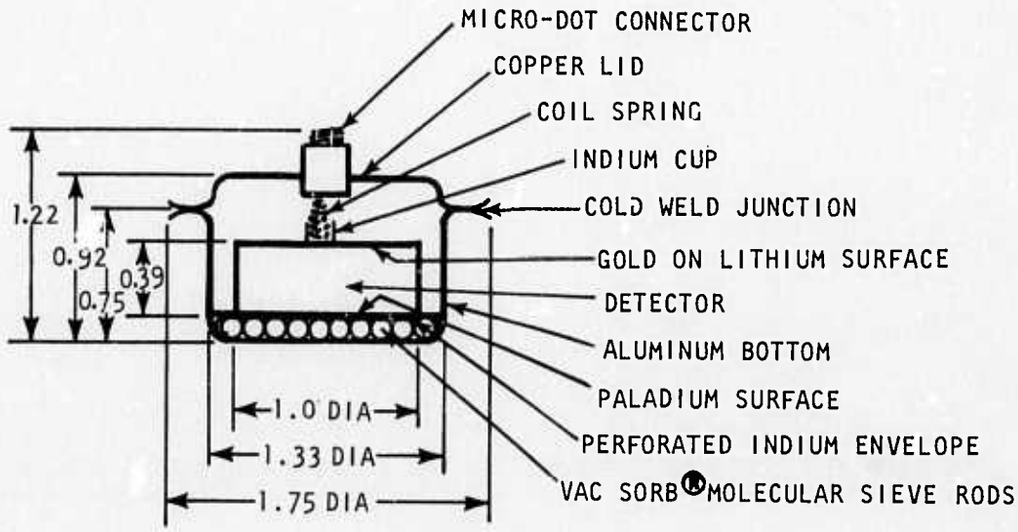

CAN WALL THICKNESS = 0.020 INCH

® TRADEMARK OF VARIAN, VACUUM DIV., PALO ALTO, CALIFORNIA

163344 DIMENSIONS ARE IN INCHES

Figure IV-10. HP-12 Detector/Can Assembly

(2) Detector HP-20

The original planar configuration of this detector was modified by the groove shown in Figure IV-11 to give a guard-ring configuration. The canning procedure applied to detector HP-20 was the same as that applied

to HP-12. However, a single thin sheet of indium was used in the HP-20 can instead of the envelope containing the molecular sieve rods. Orientation of the detector inside the can is such that the coil spring contact is centered on the grooved face.

The weight of the detector HP-20 can assembly is 43.0 grams.

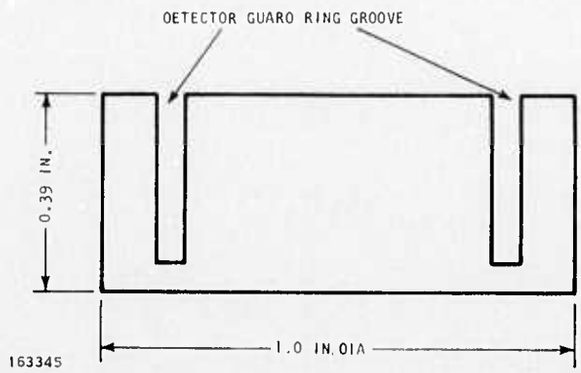

Figure IV-11. Side View Diagram of Detector HP-20

c) Electrical Properties

(1) Detector HP-12

When cooled with liquid nitrogen external to the spectrometer Dewar, HP-12 exhibited the characteristics given in Table IV-1. Apparently, with a bias voltage between 300 and 400 Vdc, the detector begins to break down and essentially is fully depleted. On 26 March 1973, this detector was cooled to approximately 150°K in the spectrometer Dewar. The application of 300 Vdc to the detector resulted in a leakage current of 7.3 na.

Table IV-1

DETECTOR HP-12 ELECTRICAL PROPERTIES AT 77°K
(19, 20 March 1973)

Bias Voltage (v)	Leakage Current (na)	Capacitance (pf)
10	< 0.1	74.0
20	< 0.1	54.0
40	< 0.1	39.0
100	< 0.1	25.0
150	< 0.1	22.0
200	< 0.1	20.0
250	< 0.1	19.5
300	< 0.1	19.0
500	25	17.0
600	60	17.0
700	210	(no data)

It is anticipated that as the detector ages and acquires more surface contamination inside the can, the leakage current will increase for a given bias voltage. Hence, overall performance will decrease to an unacceptable level.

(2) Detector HP-20

On 2 April 1973, HP-20 was cooled to 77°K in liquid nitrogen and electrical properties were recorded as shown in Table IV-2.

Table IV-2

DETECTOR HP-20 ELECTRICAL PROPERTIES AT 77°K
(2 April 1973)

Bias Voltage (v)	Leakage Current (na)	Capacitance (pf)
10	< 0.1	68.0
20	< 0.1	65.0
40	< 0.1	55.0
100	0.32	41.0
150	0.58	25.0
200	1.10	21.0
250	1.85	20.5
300	2.90	19.0

The rate of increase of leakage current with increasing bias level indicates detector breakdown occurs more gradually, but at lower voltages, in HP-20 than in HP-12. This is in contrast to the depletion characteristics of the two detectors, which are more similar (i.e., approximately 300 to 400 Vdc being sufficient for nearly complete depletion).

Operating HP-20 at approximately 150°K on 30 March 1973 produced a leakage current of 17.0 μa with the application of 300 Vdc bias.

As in the case of HP-12, the useful lifespan of HP-20 is expected to be terminated eventually as self-contamination and other factors degrade the performance capabilities of the detector material. No data are available on expected lifetimes of these detectors.

2) Dewar Assembly

The Dewar, in its function of coupling the detector to the cooling system and providing a low heat-leakage environment for the detector, may be considered a part of both systems (i.e., detector/Dewar assembly as seen from the analog-to-digital converter and Dewar/cryostat assembly associated with the cooling system).

Figure IV-12 illustrates the configuration of the assembly with the detector mounted against the end of the cryostat chamber and wired to the terminals of the MHV connector which mates to the cable from the ADC. The wires are of small diameter platinum enclosed in Teflon sleeving. The +BIAS wire is passed through a hole in the detector mounting plate to minimize vibration induced by the cooling system. The MHV connector is bonded to the outside of the glass for strength only and does not form a vacuum-tight seal.

The connector terminals are Kovar rods which are sealed in the glass wall, thus forming the vacuum-tight feedthrough. The detector is isolated from chassis ground by the glass walls of the cryostat chamber and the

glass outer wall on which the MHV connector is mounted. The interior surface of the Dewar wall is coated with an aluminum and silver thin film which functions as a complete electrical shield around the detector. This shield is grounded to the chassis through the Dewar base.

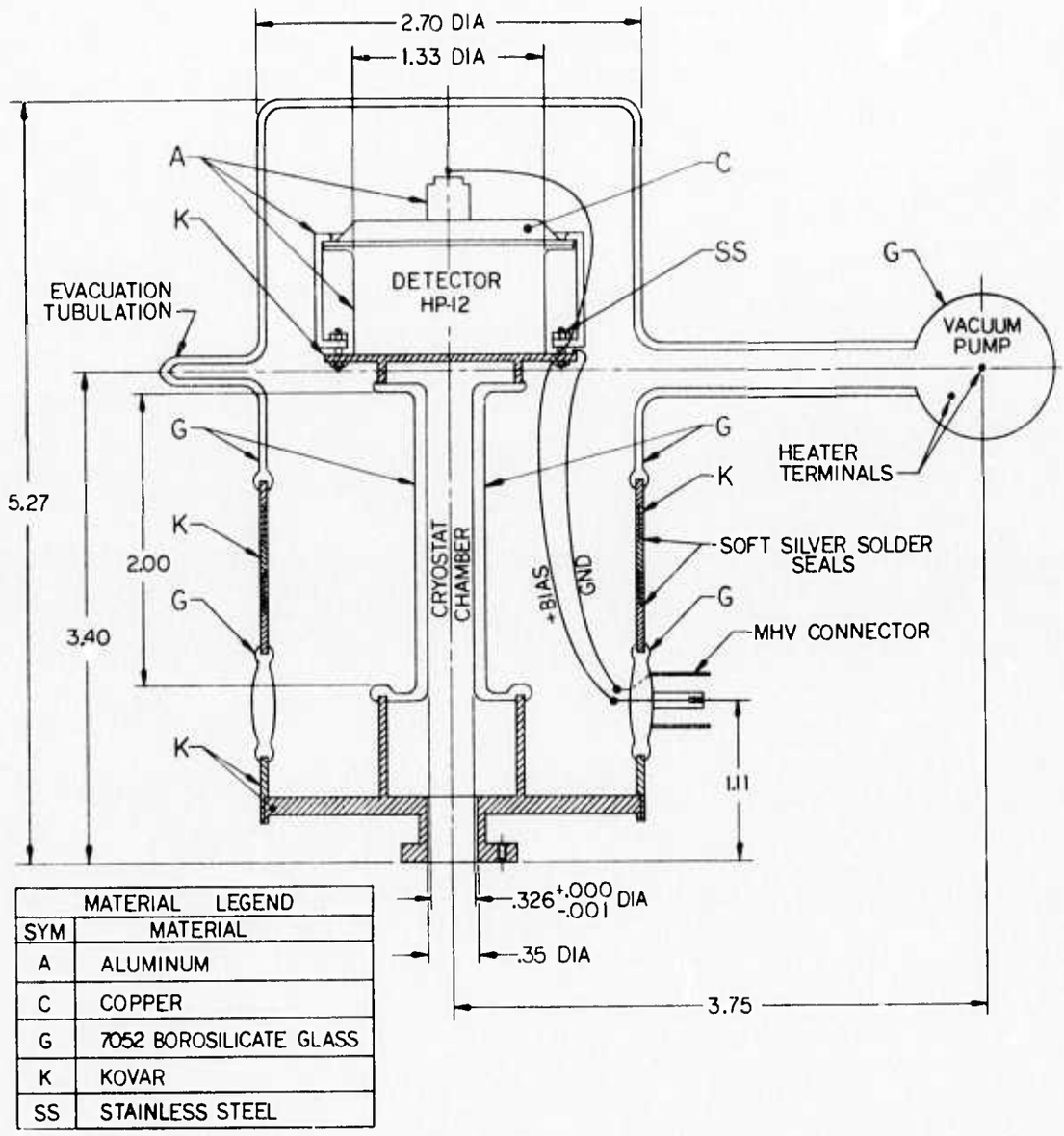

MATERIAL LEGEND	
SYM	MATERIAL
A	ALUMINUM
C	COPPER
G	7052 BOROSILICATE GLASS
K	KOVAR
SS	STAINLESS STEEL

163346

Figure IV-12. Detector/Dewar Assembly

The major features of the Dewar as a part of the cooling system are those which serve to minimize the heat load of the cooling system and to effectively couple the cryostat to the detector (Figure IV-13).

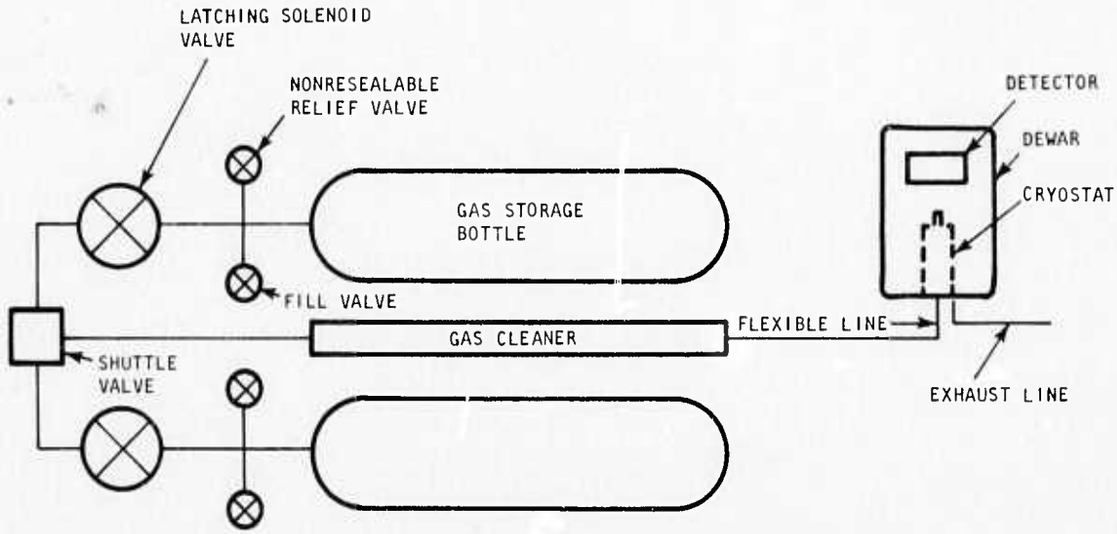

163347

Figure IV-13. Schematic Diagram of the Detector Cooling System

The following features which reduce heat load are:

- Interior Dewar surface-coated with low-emissivity metal film
- Low thermal conductivity glass construction where possible
- Evacuated environment maintained by vacuum pump

The Dewar interior wall surface above the solder seals is coated with evaporated aluminum. Below these seals, the surface is coated with chemically deposited silver. The surface emissivity is estimated to be approximately 0.05.

The glass used in constructing the Dewar is type 7052 borosilicate. Although selected for its expansion coefficient match to Kovar, the inherent low thermal conductivity of the glass is a significant factor in minimizing cooling-system heat load.

The vacuum (getter) pump functions on the principle of sorbing active gases with a nonevaporable getter alloy of zirconium-aluminum. The primary advantage of the getter pump over the VacIon pump is its ability to pump continuously at ambient temperature without the application of power. The effectiveness of this operational characteristic however depends on previous Dewar evacuation to a pressure in the 10^{-8} Torr region. The main disadvantage of using the getter pump is the inability to provide a pressure readout within the Dewar.

3) Detector Cooling System

a) General

A Dewar assembly, cryostat, and two gas-storage bottles comprise the major components of the detector cooling system (Figure IV-13). The Dewar (Dewar flask) is used to house the germanium detector in a low heat-leakage, evacuated environment and to maintain effective detector thermal coupling to the cryostat as described in the preceding subsection.

Each storage bottle is filled with high-purity Freon-14 gas to approximately 3,000 psig. When cooling is desired, a latching solenoid-actuated start valve is opened by applying a 24-Vdc pulse. High-pressure gas from a storage bottle flows through a shuttle valve and a filter/absorber to the cryostat which condenses the gas to liquid state at the detector. The liquid evaporation cools the detector to approximately 145° to 150°K, and the spent gas is discharged outside the case. When the storage-bottle pressure decreases to the level at which gas-to-liquid conversion no longer occurs,

the cooling cycle is complete and the detector temperature slowly returns to ambient. Unless the start valve is closed, gas continues to flow through the cryostat until the storage bottle pressure decreases to ambient. When a second cooling cycle is desired, the second start valve is actuated to release gas from the second bottle. Gas cross-flow into the previously emptied bottle is prevented by the shuttle valve downstream from the start valves.

b) Cryostat

The principle of this device is based on the Joule-Thomson effect gas-expansion cooling system. The unit is fitted with a mounting flange to mate with the Dewar. This flange provides an inlet for the refrigerant and a vent line for exhausting the boil-off gas. The unit consists of an inlet filter, finned spiral heat exchanger, orifice protection filter, and expansion orifice with flow control mechanisms. The unit is basically designed to fit snugly into a Dewar having an internal precision bore diameter and positioned to within 0.06 inch of the end of the chamber.

High-pressure gas enters the unit through the inlet filter and passes through the finned heat exchanger tubes forming the outer cylindrical surface of the cryostat proper. At the end of the heat exchanger tube, the gas passes through another filter and a variable expansion orifice into the end of the cryostat chamber, thus reducing its temperature considerably. To escape from the Dewar, the gas must follow the path enclosed by the spirally wound heat-exchanger fins and the inner Dewar cryostat chamber. This process causes the low-temperature exhaust gas to remove heat from the incoming high-pressure gas, thus lowering the temperature at which it encounters the expansion orifice. Shortly after the flow of gas is initiated, the gas passing through the orifice begins to liquefy in the end of the cryostat chamber, thus providing a source of liquid-gas refrigeration. As the amount of liquid increases in the Dewar, a temperature probe on the end of the cooler

senses its presence and adjusts the variable expansion orifice to maintain the quantity of liquid at a constant value. This action matches the amount of refrigeration provided to the heat load and provides optimum high-pressure gas supply utilization.

The inlet filter is a 2.5- to 3-μm absolute sintered bronze filter located in the head of the cryostat.

The heat exchanger is a 0.020-inch diameter copper-nickel alloy tube which has helically wound external fins approximately 0.012 inch wide by 0.004 inch thick.

The cryostat is supplied with a miniature particle filter just upstream of the expansion orifice. This filter (2 μm absolute) contributes significantly to the cryostat reliability by removing contaminants from the supply gas which may have solidified as the gas temperature is reduced in the heat exchanger. The filter is somewhat self-cleaning in that low-temperature solidified contaminants re-evaporate when the cryostat is shut down and are subsequently purged from the unit when it is restarted.

The flow control system adjusts the rate of high-pressure gas flow through the expansion orifice. This is accomplished by a bellows-actuated needle which restricts the expansion orifice. A miniature temperature-sensing probe extends from the cold tip of the cryostat. This probe is a small deadend tube, the internal volume of which is continuous with the chamber surrounding the control bellows. This volume is charged to a predetermined pressure during the final cryostat assembly operations. As liquid builds up in the Dewar, the gas in the control volume is cryo-pumped to the probe. This action changes the differential pressure across the control bellows and causes the needle valve to reduce the gas flow through the expansion orifice.

The control provided by the mechanism is proportional to the heat and responds quickly to changes in heat load. It requires no electrical power and can tolerate more contaminants than a fixed-orifice design. This tolerance arises from the fact that any flow restriction through the orifice results in the needle valve being opened automatically to compensate, thus clearing it of any small particles.

c) Gas Storage and Transfer Assembly

This assembly consists of the components shown in Figure IV-12, excluding the detector/Dewar/cryostat assembly.

(1) Gas Storage Bottles

The gas-storage bottle volume is 25 in.^{3} Bottles have been tested at 5,000-psig pressure and are protected by the nonresealable relief valves (burst disks).

(2) Latching Solenoid Start Valve

These valves require momentary 24-Vdc pulses to open and to close. The design goal requirement for these valves was to maintain the 3,000-psig pressure for approximately 6 months.

(3) Shuttle Valve

Pertinent technical data regarding the shuttle valve are:

- Operating pressure — 0 to 3,000 psi
- Proof pressure — 4,500 psi
- Burst pressure (min.) — over 7,500 psi
- Body leakage — zero

A less than 1-psi pressure differential between the two inlet ports will actuate the shuttle and close off the low-pressure side. If both start valves are opened, the pressure difference in the bottles will be maintained within approximately 1 psi. This feature provides the capability of discharging the bottles individually or simultaneously.

(4) Gas Cleaner

The gas cleaner or filter immediately upstream from the cryostat removes any traces of gaseous and particulate contamination which might enter the system due to improper bottle charging or bottle changing. The cleaner contains a specially chosen molecular sieve and a 5-μm absolute filter to remove contaminants such as CO_2 and H_2O which could clog the cryostat. The filter consists of a stainless steel tube to contain the molecular sieve with the particle filter at the outlet end and a sieve-retaining screen at the inlet end.

The filter contains sufficient molecular sieve to provide approximately 50 hours of cooler operation between replacements if the system is charged with high-purity (99.9 percent) gas. The gas cleaner may be replaced with a regenerated cleaner at routine intervals to ensure proper operation. Used cartridges can be regenerated by heating and purging with high-purity gas or by evacuating them and then packaging them in a hermetically sealed bag which is backfilled with high-purity gas.

(5) Flexible Line

A flexible line connects the cryostat to the gas supply assembly and allows cryostat movement relative to the rest of the system. The pipe has a 1-inch minimum bend radius.

The inlet end of the pipe is equipped with a finger-tight joint which incorporates an O-ring seal and allows for disconnection without rigorous tool application while maintaining leak tightness at up to 6,000 psi pressures. This feature provides for easy cleaner cartridge and bottle assembly removal and replacement.

d) Performance Design Goals

The following performance criteria were design goals for the cooling system operation.

- Operating temperature — 145°K (+2°K, -70°K) with maximum ±1°K detector temperature change during steady-state operation

- Detector cooldown — under 90 seconds time to 145°K, with inlet gas temperature at 120°F

- Cooling duration — 30-minute steady-state operation after cool-down (maximum 0.5-W heat load at 120°F)

- Cryostat orientation — cold end up. (To accomplish this, the end of the cryostat chamber may contain a suitable wicking material to retain the liquefied gas in the desired location.)

- Reliability — MTBF 1500 hours (as determined by reliability analysis performed by vendor)

- System weight estimate — 12.5 pounds

- Standby time (nonoperating) — 6 months, minimum

- Supply gas — high-purity argon or Freon-14

- Environmental — must meet the environmental vibration requirements of MIL-STD-810B for ground-based equipment, Method 514, Test Procedure No. 10, with Equipment Mounting Configuration 3 and Equipment Category H. Ambient temperature range will be 0 to 55°C.

4) Detector Bias Supply

The detector bias supply is specifically designed for use with germanium detectors. It provides a truly low-noise bias source while requiring very low input power. The output voltage can be varied from 250 to 2500 Vdc by changing the value of an internal resistor. Stability and regulation are 0.5 percent over a temperature 0 to 55°C range and a ±10 percent input voltage. The performance characteristics of this unit are essentially the same as specified in the preliminaty design.

5) Analog-to-Digital Converter

The ADC consists of a charge-sensitive preamplifier, a post-amplifier/offset gate, a height-to-time converter, and a clock-gate synchronizer. The preamplifier input is ac coupled to the detector. This small, lightweight ADC is designed for use with germanium detectors and requires very low input power.

The ADC employs the Wilkinson-type capacitive discharge ramp conversion method. The low-level charge signals produced by the gamma-ray interactions in the detector are converted into a pulse, the width of which is proportional to the charge-signal amplitude and thus to the energy deposited in the detector. The leading and trailing edges of the pulse and the discharge current of the ramp capacitor are synchronized with the system clock (16 MHz).

The only major change in this unit relative to the preliminary design is in preamplifier-detector coupling. The ac coupling specified here provides better performance stability than does dc coupling.

6) Memory System

The solid-state memory system used as a buffer storage for amplitude histogram data during the time period in which data are being accumulated, employs MOS dynamic storage arrays. Being dynamic, the storage arrays require refreshing every 2 ms for data retention. The refresh control logic is contained within the memory system itself. The memory provides for 4,096 words of 18 bits each and has a ≤ 1.2-μs cycle time. (This is essentially unchanged from the preliminary design. However, when the technical effort of Phase II was terminated per contract specifications, a malfunction condition existed in the memory which somewhat degraded the performance of unit in the addresses 0 to 1,024.)

7) Magnetic-Tape System

The magnetic-tape system provides long-term data storage with no power consumption. Data accumulated in the memory system are recorded serially on one track. Consisting of digital cassette tape drive, drive control electronics, record/reproduce electronics, and data encoder/decoder, the tape system has a storage capacity of $\approx 2.88 \times 10^6$ bits when recorded at an 800-bpi density (no change from preliminary design).

8) Gross-Count Monitor

The gross-count monitor (GCM) has a twofold purpose: to provide a means of monitoring the radiation level (count rate) by use of a visual display, and to select a radiation count rate which, when exceeded, initiates the accumulation and recording of a gamma-ray spectrum. It consists of a gross-count detector (GCD) enclosed in a metal can to protect it from the environment and to protect the operator from high voltage, as well as a gross-count display and threshold logic.

a) Gross-Count Detector*

A high-voltage supply and a sensor comprise the GCD. The sensor is a Geiger-Mueller tube which draws no power except when counting — and then only small amounts. When an energetic particle (gamma ray, etc.) passes through the tube, ionization occurs within the tube, causing current to flow through the load resistor. The resultant voltage pulse developed across the load resistor is the input to the gross-count display and threshold logic.

b) Gross-Count Display and Threshold Logic

The gross-count display and threshold logic is divided into three functions: logic to enable the count and/or to display the count, a 4-digit (decimal) counter and logic to determine when the count has reached the number

*A GFE cadmium telluride detector and associated circuitry was evaluated for application as the gross-count detector and was found to have too high power consumption and too low counting efficiency.

selected by the thumbwheel switches, and a 3-digit counter/divider and LED displays which display the count when enabled.

The GCM is turned on when the SU power switch is on.* At that time the logic is initialized so that the display (LEDs) is disabled and the counters are enabled to count. When the display switch is depressed and released, the logic is set to allow the signal from the timer to initiate a 30-second counting interval. At the end of the 30-second interval, the counters are inhibited and the display is enabled for 30 seconds, thus displaying the contents of the counter. At the end of the 30-second display period, the display is inhibited and the counters are enabled. The counters are enabled continually except during the 30-second display interval.

Each time the threshold counter reaches the number selected by the digiswitches, a signal termed GCTHR is generated. GCTHR is inhibited in the control logic section of the SU until the proper sequence has been accomplished.

9) Seismic Monitor

The seismic monitor(SM) consists of a geophone and circuitry for the seismic threshold/amplifier and for SM control logic. The geophone is the sensor for detecting seismic-generated signals. The SM is turned on continuously when the power switch is on.

a) Analog Section

The analog section includes circuitry to filter and amplify the signal from the geophone, signal-amplitude averaging circuitry, and threshold-detection circuitry. Amplifier gan can be varied in 10-dB steps (0 to 90 dB) by a 10-position switch on the PCB.

---

*This change from the preliminary design is to eliminate all possibilities of seismic monitor failure to turn on the GCM.

Amplifier output is input to an absolute-value and averaging-circuit combination which has an approximate 10-second time constant. The output of the averaging circuit is input to a threshold (level) detector which generates an output when the absolute value of the signal averaged over 10 seconds exceeds the threshold. This output is input to the seismic control logic.

b) Seismic Detection Control Logic

The seismic detection control logic determines if seismic occurrence, as indicated by the output of the analog section, is to be recorded. To prevent a false output, the seismic detection logic automatically disables the seismic monitor output for 128 minutes after the spectrometer power is turned on. A signal from the elapsed-time clock is input to the logic section of the SM and, at the end of 128 minutes after "power on," causes the seismic monitor to be enabled.

When an output from the analog section occurs, it passes through logic circuitry which generates the signal monitor time to tape (MTTT). Signal MTTT goes to the data formatter which initiates the elapsed-time clock output recording on magnetic tape. Signal MTTT also clears the 3-digit decade counter and inhibits the MTTT signal from being generated again for 1 hour or for 10 hours as selected by the SEIS switch on the control panel. When the interval selected by the SEIS switch has elapsed, the circuitry is reset, enabling any subsequent seismic occurrence to generate another MTTT.

10) Elapsed-Time Clock

The elapsed-time clock (ETC) utilizes COS/MOS integrated circuits as well as a crystal to generate timing signals along with elapsed-time information as required in the spectrometer. The ETC is on when the spectrometer power switch is on. When the SU power is turned on, the ETC

is cleared to 0 in synchronization with the 19.2-kHz crystal clock frequency of the ETC itself; therefore, the time is synchronized within 100 μs of time 0. The RESET switch may be used to clear and initialize the ETC as well as the remainder of the system.

a) Time Oscillator/Divider

The oscillator/divider contains a 19.2-kHz crystal oscillator along with reset logic and dividers for generating the timing and control signals required in the SU. These outputs are a 19.2-kHz signal, a 2-Hz signal (2 pps), and a 4-ppm signal, the former being used in the data formatter and SU control logic and the latter input to the time accumulator/buffer PCB.

b) Time Accumulator/Buffer

The accumulator/buffer PCB accepts the 4-ppm signal and divides it by 2 and 4. The output of the divide-by-4 flip-flop is a 1-ppm rate and is input to an 18-bit binary counter. Therefore, the accumulator counts the 1-ppm accumulating elapsed-time information up to 90 days from time 0, or when power was turned on. The output of the accumulator then is an 18-bit binary word representing elapsed time. This output is input to two groups (sets) of transmission gates (bilateral switches). One set is enabled by the SU control logic and the other set is enabled by the data formatter. Thus, the time data are selected by the two sections of logic in the SU when required for recording.

11) Control Logic

The spectrometer unit control logic consists of the following primary functions:

- ADC control
- Memory control
- System mode control
- Data formatting and tape control

a) Analog-to-Digital Converter Control Logic*

The ADC control logic (ADCCL) interfaces the analog-to-digital converter to the remainder of the spectrometer. When the ADC gives an output signal, the ADCCL converts this clock-synchronized amplitude-to-pulse-width output into a 16-MHz pulse train which will be input to the memory address counter. The address counter is preset to -44 (decimal), which equals the threshold count (0.1 MeV or 3 μs) to be subtracted. The number of 16-MHz pulses, after subtracting 44, represents the address in memory for that particular amplitude pulse from the detector. A pulsewidth of 3 μs gives an address count of 3.

Upon receipt of the ADC output, the ADCCL generates a signal to the ADC for closing the linear gate (CLG). After the ADC output is digitized, the ADCCL generates a request for a memory read/modify/write cycle. All ADC outputs which generate addresses greater than 4,095 are not stored in memory.

After the memory cycle, the ADC control allows the linear gate to be reopened and generates a 20-μs time window (HAZARD). If a new input from the ADC occurs during the window, the RESET signal is generated, increasing the HTC capacitor discharge current so that it is rapidly discharged. During this time, the linear gate is held closed for a fixed "dead time" which is short compared to the full-scale discharge time, and no memory cycle is requested.

The ADCCL generates a "live time" gate (LTG) when the ADC system is not busy (the system can accept a new input from the detector). This signal will be true except during the ADC conversion time and the resulting memory read/modify/write (RMW) cycle plus the time window (HAZARD) and any resulting RESET signal.

---

*The functions of this logic circuitry are essentially the same as in the preliminary design.

b) Memory Control Logic*

The memory control logic (MCL) primarily interfaces the memory with the rest of the system, accepting signals from the ADC control and the system control logic and determining the particular cycle required of the memory (read, write, or RMW cycle). The MCL generates signals to transfer the memory output data into the data register and, in the case of an RMW cycle, increments (adds 1) to the data before restoring them into the memory. If a read cycle is being performed, the data are not incremented; for a write cycle, the input data register is always stored in the selected address. The MCL generates a memory-busy signal while any memory cycle is being generated.

c) System Mode Control Logic*

The system mode control logic (SMCL) interfaces all other spectrometer subsystems, determining the SU's mode of operation and controlling the sequence of functions during each mode. The sequence of functions and/or operations is determined by monitoring signals such as the seismic monitor, the gross-count monitor, time-clock outputs, and signals generated by the RCU. These signals indicate to the SMCL when various subsystems are to be turned on.

The modes of the SMCL are grouped under

- Background-spectrum accumulation
- Standby monitor
- Source-spectrum accumulation
- Tape-to-memory

*The functions of these logic circuits are essentially the same as in the preliminary design.

- Memory-to-tape
- Memory-to-RCU
- RCU-to-memory
- RCU-initiated accumulation

(1) Background-Spectrum Accumulation Mode

In this mode, the gross-count monitor is manually turned on and the count rate visually monitored to determine the background level, which in turn, determines the threshold setting for the gross-count monitor. The threshold is set, and the seismic monitor power and time clock are turned on.

The background-spectrum accumulate cycle is initiated by manually turning on the spectrometer system; at this time, the time clock is cleared to 0s and its output stored in address 1. During a delay of 120 seconds to allow the detector to reach operating temperature, the memory is cleared. After the 120-second delay, a 30-minute countdown is started. During this countdown, the ADC is allowed to accept signals from the detector for pulse analysis, and live time is accumulated in address 0 of the memory with a 0.5-second resolution. If any channel (address) between addresses 3 and 4,095 overflows during this period or at the end of the 30-minute countdown period, time is stored in address 2, the ADC is disabled, and the tape system is turned on.

The SMCL requests memory-read cycles as required by the data formatter via the MCL sequentially through the addresses of the memory. As each address is generated, the data bits are presented to the data-format logic. After all data are transferred from memory to magnetic tape, the system is turned off except for the seismic monitor, the gross-count monitor, and the time clock. The system is then in a standby monitor mode.

(2) Standby Monitor Mode

In this mode, the SMCL monitors the signal outputs from the SM and the GCM. When a seismic signal exceeds the SM threshold, the SMCL turns on the tape system, the time-clock output is recorded on tape, and the system returns to standby mode. The time of each subsequent seismic occurrence is recorded until eight events have occurred or the gross-count monitor indicates that the count rate is exceeding its threshold. When the count rate exceeds the threshold, the SMCL turns on the system except for the tape system and the system is then in the source-spectrum accumulation mode.

(3) Source-Spectrum Accumulation Mode

In the source-spectrum accumulation mode, the system performs the same functions as when in the background-accumulate mode except that the time system is not cleared. If overflow occurs within the first 15 minutes of the countdown, the system stops accumulating, does a record cycle, and returns to the accumulation mode. If overflow does not occur again before the end of the 30-minute period, the system automatically completes the 30-minute period in the accumulation mode and turns off after a record cycle. If a record overflow occurs at any time in the remainder of the 30-minute period after the first overflow, the system automatically turns off after the second spectrum is recorded, even though the 30-minute period is not complete. After the last spectrum has been recorded, the system turns off and will not perform additional functions until manually reactivated.

(4) Tape-to-Memory Mode

In this mode, which is primarily for testing purposes and is manually initiated by the readout/control unit, the tape system, memory system, and system control logic are turned on and data on tape may be transferred to memory. The memory cycles during this mode are write cycles only.

After the data transfer to memory, the data formatter is turned off. The RCU TEST switch must be in the ON position to prevent the complete logic system turnoff and the consequent loss of memory data.

(5) Memory-to-Readout/Control Unit Mode

In this mode, the RCU generates all control signals. Data are parallel-transferred from memory to the RCU by memory-read cycles being sequentially generated, starting at address 0. The RCU initiates the cycle request. The memory address and memory data are buffered and are available in the control panel connector for use by the RCU, as is the data-available pulse. The RCU TEST switch must be on.

(6) Readout/Control Unit-to-Memory Mode

This mode is identical to the tape-to-memory mode except that the RCU generates data words and cycle requests. Data from the RCU are stored directly into memory. The RCU formats the data to be in parallel-word format and supplies all control signals during this mode. The RCU TEST switch must be on.

(7) Memory-to-Tape Mode

This mode is used to transfer data from the memory to the tape system and is initiated automatically at the end of a spectrum-accumulation period, or by command from the RCU. The memory is addressed sequentially in this mode and a read cycle is requested per address. If this mode is initiated at the end of spectrum accumulation, the system is automatically turned off. If the RCU initiates this mode and memory data retention is desired, the RCU TEST switch must be on.

(8) RCU Accumulate Mode

This mode is initiated by depressing the ACCUM pushbutton on the RCU panel; the spectrometer unit accumulates a spectrum for 30 minutes

and records the data on tape as in the background- or source-spectrum accumulation modes. After the data are recorded on tape, however, the accumulate-record cycle is repeated as long as the system is in this mode. The system remains in this mode until the RCU STOP pushbutton is depressed.

This mode allows continuous data accumulate-record, if desired. The detector cooling system must be activated by other means and, if operating on battery power, the operation duration in this mode is limited by battery voltage (operation limit to B+ > 11 Vdc).

d) Data-Format and Tape-Control Logic

The data-format tape-control logic (DFL) accepts data from the time clock or the memory system and converts the data to nonreturn-to-zero (NRZ) format. The DFL generates timing and control functions for formatting the data on the tape and the control signals for the tape recorder.

The tape data format (Figure IV-14) consists of an initial gap immediately after the beginning-of-tape mark. After the initial gap, the background-spectrum data file is recorded three times in succession. The seismic-event time-data records No. 1 through N (N = 1 to 8) follow the background files. Following the seismic-event time-data file, the source-spectrum data record is recorded three times in succession. A record will include a synchronization word, record header, 4,096 memory data words, a checksum character, and an (IRG) interrecord gap.

The format shown in Figure IV-14 is for serially recorded data on a single track. Repeating a record of data on tape will allow the data to be read more than one time and to be compared for errors which may occur during record or reproduce. The recording and retrieval reliability is very important.

The DFL reformats the NRZ, plus clock data from the tape system, into parallel data for the SMCL during the tape-to-memory mode.

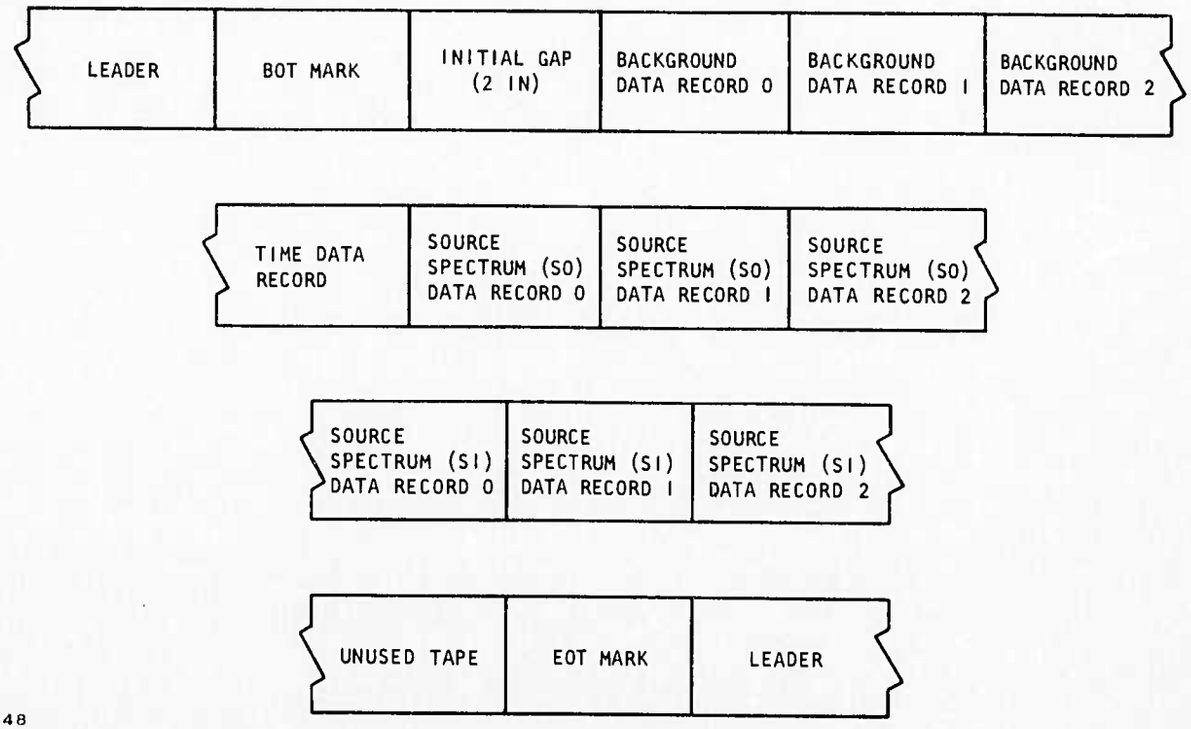

Figure IV-14. General Tape Format

12) Power System

The power system (Figure IV-15), which consists of battery pack, power switches, and voltage regulators, is one of the more important parts of the spectrometer system; it can supply not only the low current required during a standby mode, but much larger currents when needed. It is capable of retaining enough of its energy capacity after a long shelf life at low current drain to permit accumulating and recording the source spectrum.

a) Battery Pack

The battery pack generates two voltages, +14.8 V and -14.8 V. The negative voltage is produced by seven identical 2-V batteries connected in series and is used only for the tape recorder. The positive voltage is used for all the system as required and is produced by stacking two 6-V batteries and placing one 2-V battery of the same current rating in series with them. Two

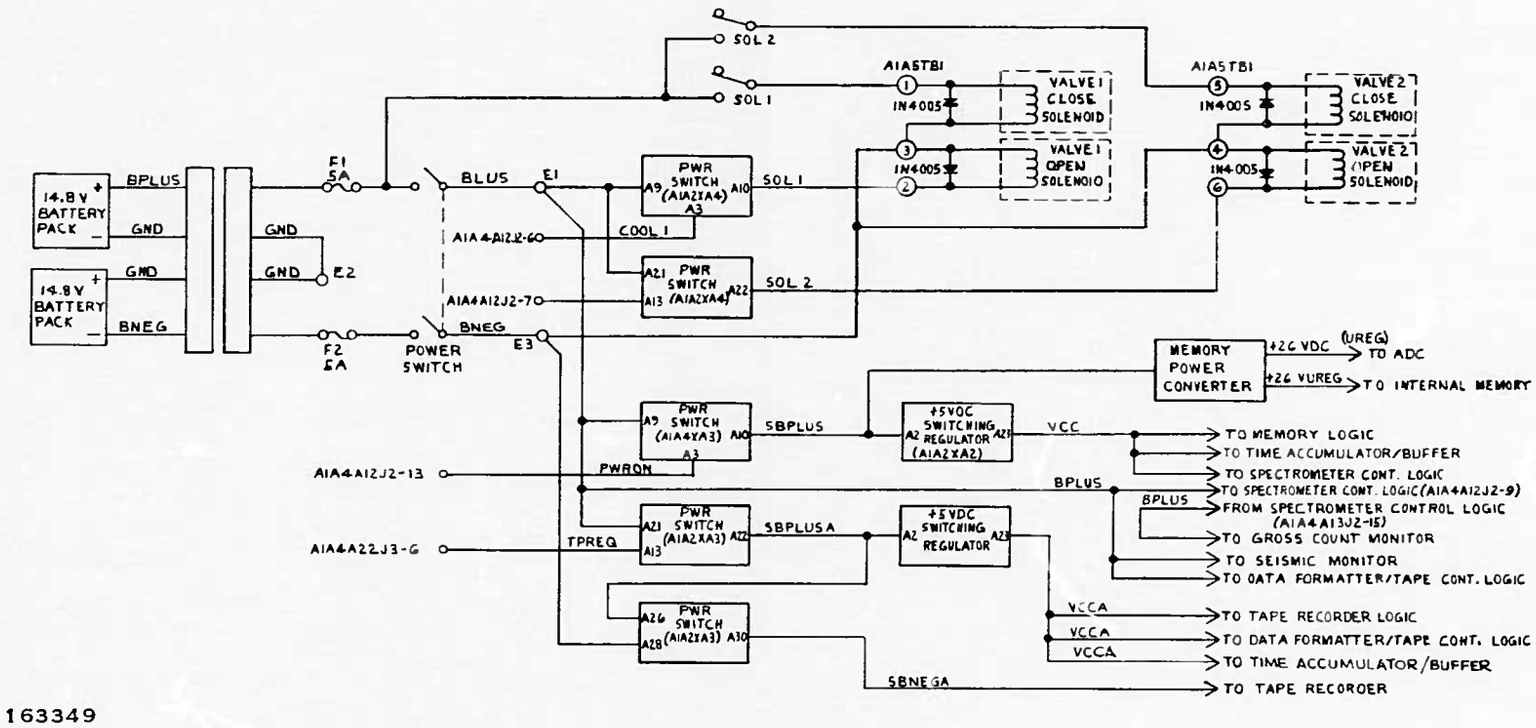

Figure IV-15. Power Distribution and Control

of the series combinations are then connected in parallel to supply the current (amp/h) required by the system. All of the batteries are rechargeable lead-acid types with "gelled" electrolyte and meet all the requirements for this type system.

b) Power Switches

These are power-transistor switches driven by inputs generated from the SMCL, as power is required. Their inputs are driven from COS/MOS drivers. Six identical power switches are used to switch power to the cooling-system valve solenoids for opening the valves and to switch power to the memory system and the VCC and VCCA regulators, the tape recorder and the data-format/tape-control logic, and the negative voltage to the tape recorder.

c) Voltage Regulator

This is a switching regulator having an efficiency of approximately 85 percent when supplying +5 Vdc at 1.5 amp from a 12- to 14-V input. The basic element is an integrated regulator.

b. Readout/Control Unit

Figure IV-16 is a block diagram of the RCU, which has two primary functions in the portable spectrometer system:

- To enable an operator in the field to use an oscilloscope to monitor the accumulation of data after the system is turned on
- To check (test) the complete system

1) Field Operations

While in the field, the operator may connect the X/Y outputs of the RCU to the X/Y inputs of an oscilloscope and monitor the accumulation of a peak(s) during the accumulation modes. The address data are input to a

12-bit D/A converter which generates the X output. The 12 LSBs or the 12 MSBs of the data (as selected by switch on the RCU) are input to a 12-bit D/A which generates the Y output. The X/Y outputs are functional during any other mode of operation for the RCU.

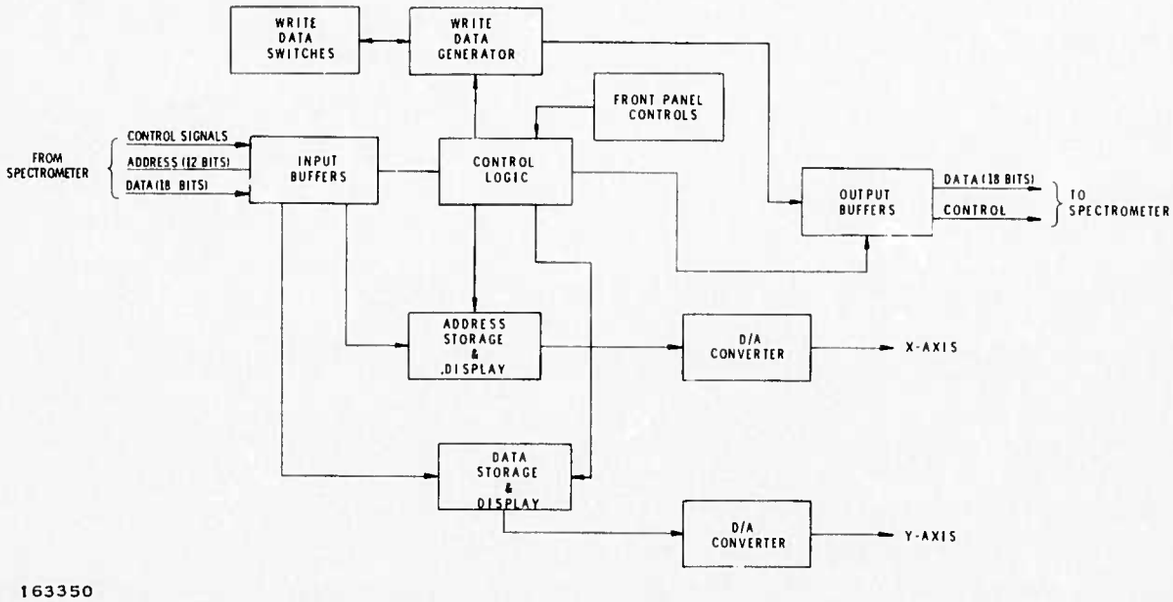

Figure IV-16. Readout/Control Unit Block Diagram

2) Test Operations

The operator can select any of the four modes of operation of the RCU: RCU/MEM, MEM/RCU, MEM/TAPE, or TAPE/MEM. These modes, respectively, allow known data from DATA switches to be written into memory, to be read out of memory for display as X/Y output and/or on the display lights, to be transferred from memory to the magnetic tape, or to be transferred from the tape to the memory. Inasmuch as the memory retains data only while power is not interrupted, the TEST switch of the RCU must be in the ON position during these testing modes. An example of usage of the RCU follows.

- Select the RCU/MEM mode, set the DATA switches as desired, and depress the START pushbutton to write the data into memory.

- Change the mode to MEM/TAPE and depress START to record data on tape. Depress STOP and turn TEST off and then on.

- Rewind the tape, change the mode to TAPE/MEM, and depress START to transfer data from tape to memory. Depress STOP.

- Change the mode to MEM/RCU and depress START. The data displayed should be the same as the DATA switch settings. The display continues until STOP is depressed.

3) Power System

A battery and an ac/dc power supply comprise the RCU power system. If the RCU is connected to ac power, the battery is automatically switched out of the system; if the RCU is not on ac power, the battery is automatically switched into the system when the POWER switch is turned on.

The battery is intended for use in the field and does not supply power to the display unless switched to do so by using the DISPLAY switch on the RCU panel.

C. SYSTEM PERFORMANCE RESULTS

Because of difficulties in obtaining the timely delivery of GFE germanium detectors, system performance evaluation was conducted on only a few operational parameters as described in the following paragraphs.

1. Detector/System Gain and Resolution

The spectrometer unit ADC gain was determined to be such that the channel width is 0.557 keV (nonadjustable) instead of the specified 0.587 keV. This resulted in the following system full-width, half-maximum (FWHM) resolution using a pulser input to the ADC (Table IV-3).

Table IV-3

SYSTEM RESOLUTION USING PULSER INPUT

Peak Energy Address	Peak Energy Level (keV)	Resolution (FWHM) (keV)
12	6.684	1.890
129	71.853	2.005
1021	568.697	1.893
1921	1069.997	2.061

It is recognized that some unknown contribution to these resolution values was due to an unstable pulser output. Hence, for resolution determinations using a germanium detector, the system resolution (excluding the detector) is assumed to be 2.00 keV.

Spectrometer system resolution was measured using a Zn^{65} source which gave an energy peak at 1.114 MeV. This should correspond to address No. 2000.* The detectors were operated at 77°K (immersed in liquid nitrogen), while spectra were accumulated during a 30-minute period. During this period, detector HP-12 accumulated 4,021 counts in peak address No. 1807. This corresponds to 1.006 MeV. Detector HP-20 counted 2,346 events in peak address No. 1804 (1.005 MeV).**

The spectra data for the resolution evaluation are given in Tables IV-4 and IV-5 for detectors HP-12 and HP-20, respectively.

*A sufficiently strong (intense) Co^{60} source was not available to this project; hence, the substitution of a conveniently available Zn^{65}.

**Time restrictions did not permit an investigation of the cause of the difference between observed and theoretical peak location.

Table IV-4

SPECTRUM DATA FOR DETECTOR HP-12 OPERATING AT 77°K WITH A Zn^{65} SOURCE

Address Number	Raw Counts	Applied Correction	Corrected Counts	Accumulated Counts	Percent of Total
1799	232	81	151	151	0.586
1800	326	77	249	400	1.552
1801	519	73	446	846	3.282
1802	834	69	765	1,611	6.250
1803	1,366	66	1,300	2,911	11.293
1804	2,100	62	2,038	4,949	19.199
1805	2,995	58	2,937	7,886	30.593
1806	3,810	54	3,756	11,642	45.164
1807	4,021	51	3,970	15,612	60.566
1808	3,601	47	3,554	19,166	74.353
1809	2,845	43	2,802	21,968	85.223
1810	1,978	39	1,939	23,907	92.745
1811	1,029	35	994	24,901	96.602
1812	543	32	511	25,412	98.584
1813	255	28	227	25,639	99.465
1814	123	24	99	25,738	99.849
1815	59	20	39	25,777	100.000

Note that subtracting the applied correction numbers effectively removed the background counts from the peak area as shown in Figure IV-17. Corrected counts were then accumulated and the resultant accumulation distributed by address (in correct ratios) to the total corrected counts under the peak. These percent-of-total figures were plotted on probability versus address graphs as shown in Figures IV-18 and IV-19 for detectors HP-12 and HP-20, respectively.

Table IV-5

SPECTRUM DATA FOR DETECTOR HP-20 OPERATING AT 77°K WITH A Zn^{65} SOURCE

Address Number	Raw Counts	Applied Correction	Corrected Counts	Accumulated Counts	Percent of Total
1793	256	256	0	0	
1794	270	245	16	16	0.088
1795	365	234	131	147	0.810
1796	439	222	217	364	2.005
1797	575	211	364	728	4.011
1798	749	200	549	1,277	7.035
1799	1,069	189	880	2,157	11.884
1800	1,396	177	1,219	3,376	18.600
1801	1,744	166	1,578	4,950	27.271
1802	2,096	155	1,941	6,895	37.987
1803	2,265	144	2,121	9,016	49.672
1804	2,346	133	2,213	11,229	61.864
1805	2,092	121	1,971	13,200	72.723
1806	1,852	110	1,742	14,942	82.301
1807	1,415	99	1,316	16,258	89.571
1808	992	88	904	17,162	94.551
1809	561	76	485	17,647	97.223
1810	361	65	296	17,943	98.854
1811	186	54	132	18,076	99.587
1812	97	43	54	18,129	99.879
1813	50	31	19	18,148	99.983
1814	23	20	3	18,151	100.000
1815	9	9	0		

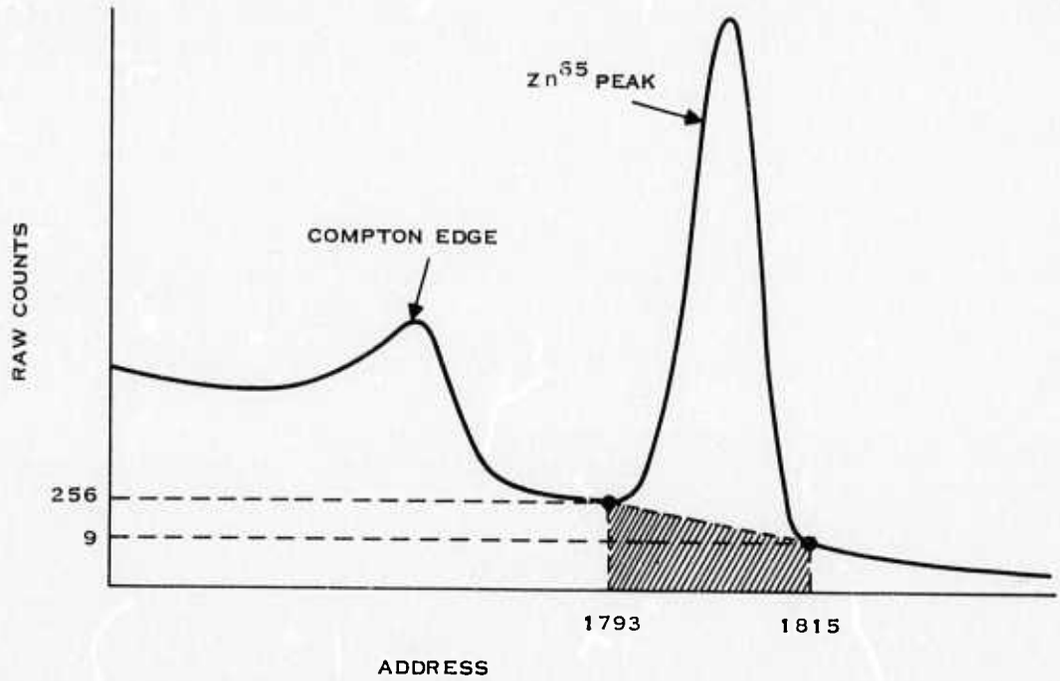

163351

Figure IV-17. Spectrum Correction Illustration for Background Using HP-20 Data

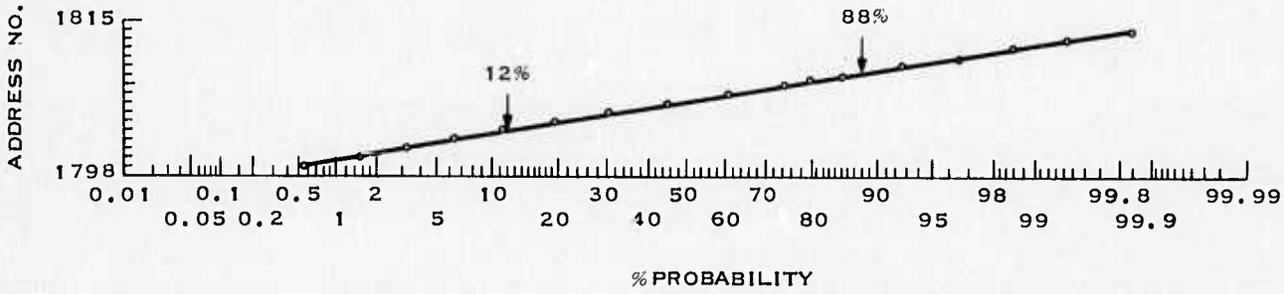

163352

Figure IV-18. Percent-of-Total Counts Vs Address Number for Detector HP-12

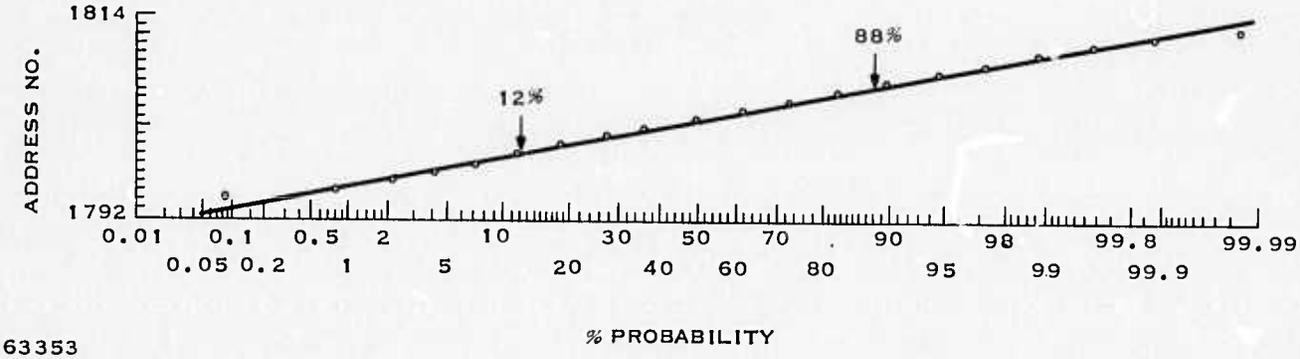

163353

Figure IV-19. Percent-of-Total Counts Vs Address Number for Detector HP-20

A straight line was hand-fitted to the plotted points and the addresses corresponding to the 12- and 88-percent probability points were used to calculate FWHM resolutions.

$$\text{Resolution (FWHM) in keV} = \left[\begin{pmatrix}\text{Address}\\ \text{at 88}\\ \text{percent}\end{pmatrix} - \begin{pmatrix}\text{Address}\\ \text{at 12}\\ \text{percent}\end{pmatrix}\right] \times 0.557 \text{ keV/Address}$$

This resolution value was calculated for HP-12 as

$$(1809.4 - 1803.1) \times 0.557 = 3.51 \text{ keV},$$

and for HP-20 as

$$(1806.6 - 1799.1) \times 0.557 = 4.18 \text{ keV}$$

Note that these resolution figures were derived from total system performance, that is, including the system electronics and the detector. Assuming 2.0-keV system electronics resolution, the following expression was used to determine the detector's contribution to total system performance.

$$T = \sqrt{S^2 + D^2}$$

where

T = Total system resolution

S = System electronics resolution

D = Detector resolution

This equation yields detector resolution values of 2.88 and 3.67 keV for HP-12 and HP-20, respectively.

Both detectors were operated at 150°K with the system. Detector HP-12 functioned normally at this operating temperature but with greatly degraded performance characteristics as observed visually on the oscilloscope display. No spectra were recorded during this functional test. Detector HP-20 did not function as a detector at 150°K; that is, only thermal noise without recognizable gamma radiation peaks were observed on the analog display.

2. Detector Cooling

Cooling the detector outside the Dewar was accomplished by totally or partially immersing the detector can in liquid nitrogen. Data in Table IV-6 are examples of liquid nitrogen cooldown results for detector HP-20. Note that detector temperature stability is indicated by leakage current stability. For practical test purposes, this detector was sufficiently cooled in approximately 2.5 minutes after immersion.

Table IV-6

CURRENT VERSUS COOL-DOWN TIME FOR DETECTOR HP-20, LIQUID NITROGEN IMMERSION (3 April 1973)

Bias Voltage (v)	Leakage Current	Elapsed Time (minutes, seconds)	Detector Temperature (°K)
0.25	0.232 μa	0	lab ambient
0.25	(dropping rapidly)	(40 s after immersion)	—
300.	3 na	2 min, 37 s	—
300.	2.6 na	3 min, 15 s	—
300.	2.5 na	4 min, 0 s	—
302	2.45 na	5 min, 0 s	—
302	2.425 na	6 min, 0 s	—
302	2.410 na	7 min, 0 s	77°K
302	2.410 na	8 min, 0 s	—

The detector cooling system performance exceeded design goals in a test Dewar as indicated by the data in Figure IV-7.

Table IV-7

DETECTOR COOLING SYSTEM PERFORMANCE IN TEST DEWAR

Elapsed Time (minutes)	Temperature of 60-Gram Mass Representing Detector (°K)
0.0	323.8
0.5	247.4
1.0	189.4
1.5	157.2
2.0	146.9
2.5	146.2
3.0	145.7
4.0	145.6
5.0	145.6
7.0	145.6
10.0	145.6
15.0	145.5
20.0	145.0
25.0	145.0
30.0	145.0
32.0	145.0
35.0	145.0

This Dewar was constructed of stainless steel and brass and represented the detector with a 60-gram copper mass mounted to the end of the cryostat chamber. The temperature sensor (thermocouple bead) was attached to the surface of the mass opposite the cryostat. Note that in Table IV-7, the temperature of this mass was cooled to the detector operating temperature region (below 150°K) within 2 minutes and was held in this region for a period in excess of 30 minutes. It should be recognized that the design goal performance involved only a 30-gram mass.

The cooling system performance in cooling the detectors provided by the government, however, was not consistent with design goals. Detector HP-12, with its thermal insulating molecular sieve rods, requires much more cooldown time than specified and, consequently, much more cooling gas than is available in both gas storage bottles contained within the system. When the cooling system was operated attached to the large gas storage cylinder in the charging system, HP-12 leakage current stabilized at 7.3 na after 55 minutes elapsed time from start valve opening.

Cooldown tests performed on detector HP-20 showed the detector to be stabilized at operating temperature within 16 minutes after start valve opening and remained constant for another 10 minutes. At the end of this elapsed time (26 minutes), Bottle No. 1 pressure had decreased to 500 psig and the effective cooling capacity of that bottle was essentially finished. Start valve No. 2 was then opened and the detector temperature remained stable for a period of 19 additional minutes, at which time the pressure of Bottle No. 2 was 350 psig. In the following 4 minutes, the pressure dropped to 150 psig and the detector leakage current began to increase, indicating that detector temperature was increasing.

It is apparent that the detector/Dewar assembly design is not satisfactory in that there is excessive heat transfer resistance between the detector and the coolant liquid supplied by the cryostat.

An alternate method for cooling the detector in the Dewar may be used. After removing the cryostat from the Dewar, the Dewar can be inverted and liquid coolant poured into the cryostat chamber. This method is considerably less effective than immersing the detector in the liquid.

3. Spectrometer System Battery Life

Battery reserve power was determined by executing normal background spectra accumulation and by recording cycles successively until battery voltage during a record cycle dropped below the 11-V minimum

allowable for proper recorder operation. Plus and minus voltages were monitored during record cycles as shown in Table IV-8.

Table IV-8

SPECTROMETER BATTERY VOLTAGE AS A FUNCTION OF NUMBER OF DUTY CYCLES

Number of Accumulation-Record Cycles	Plus Voltage	Minus Voltage
1	14.80	14.84
2	14.61	14.84
3	14.46	14.84
4	14.40	14.84
5	14.27	14.75
6	14.21	14.75
7	14.08	14.67
8	14.00	14.65
9	13.92	14.59
10	13.83	14.50
11	13.77	14.43
12	13.66	14.40
13	13.59	14.39
14	13.60	14.40
15	13.47	no data
16	13.34	no data
17	13.20	no data
18	12.92	no data
19	12.62	no data
20	11.50	no data
21	9.55	13.91

The elapsed time of this test was approximately 5.25 hours.

SECTION V

OPERATING AND MAINTENANCE MANUAL CONTENT

A handbook of instructions and data entitled OPERATING AND MAINTENANCE MANUAL FOR GAMMA-RAY SPECTROMETER SYSTEM is supplied with the system hardware. This manual provides information necessary for the proper operation and maintenance of the gamma-ray spectrometer system. General and detailed descriptions of physical and functional characteristics are given to satisfy requirements for both highly technical "troubleshooting" and nontechnical "button-pushing" activities. The table of contents, appendixes, and lists of illustrations and tables are presented in this section to indicate the document's subject matter.

OPERATING AND MAINTENANCE MANUAL FOR GAMMA-RAY SPECTROMETER SYSTEM

TABLE OF CONTENTS

Section	Title
I	INTRODUCTION
II	SYSTEM DESCRIPTION
	2.1 GENERAL
	2.2 PHYSICAL DESCRIPTION
	2.2.1 SPECTROMETER UNIT
	2.2.2 READOUT/CONTROL UNIT
	2.3 FUNCTIONAL DESCRIPTION
	2.3.1 SPECTROMETER UNIT
	2.3.1.1 Germanium Detector
	2.3.1.2 Detector Cooling System
	2.3.1.3 Detector Bias Supply
	2.3.1.4 Analog-to-Digital Converter
	2.3.1.5 Memory System
	2.3.1.6 Magnetic-Tape System
	2.3.1.7 Gross-Count Monitor

TABLE OF CONTENTS (contd)

Section	Title
	2.3.1.8 Seismic Monitor
	2.3.1.9 Elapsed-Time Clock
	2.3.1.10 Control Logic
	2.3.1.11 Power System
	2.3.2 READOUT/CONTROL UNIT
	2.3.2.1 Field Operations
	2.3.2.2 Test Operation
	2.3.2.3 Power System
	2.4 SYSTEM SPECIFICATIONS
III	SYSTEM OPERATION
	3.1 GENERAL
	3.2 CONTROLS AND INDICATORS
	3.2.1 SPECTROMETER UNIT
	3.2.1.1 SU Controls
	3.2.1.2 SU Indicators
	3.2.1.3 SU Test Points and Fuses
	3.2.1.4 SU External Connector
	3.2.2 READOUT/CONTROL UNIT
	3.2.2.1 RCU Controls
	3.2.2.2 RCU Indicators
	3.2.2.3 RCU Test Points and Fuses
	3.2.2.4 RCU External Connectors
	3.3 OPERATING PROCEDURES
	3.3.1 LABORATORY OPERATIONS
	3.3.1.1 Preliminary Procedures
	3.3.1.2 RCU/MEM Mode
	3.3.1.3 MEM/RCU Mode
	3.3.1.4 MEM/TAPE Mode
	3.3.1.5 TAPE/MEM Mode
	3.3.1.6 Date Storage and Transfer Check Procedure
	3.3.1.7 Background Radiation Monitor

TABLE OF CONTENTS (contd)

Section	Title
	3.3.1.8 Spectrum Accumulation
	3.3.1.9 Spectrum Display
	3.3.1.10 Background-Spectrum Accumulation
	3.3.1.11 Source-Spectrum Accumulation
	3.3.1.12 Cooler Turn-Off Procedure
	3.3.1.13 Battery Recharging
	3.3.1.14 Cooling-System Recharging
	3.3.2 FIELD OPERATIONS
	3.3.2.1 Preliminary Procedures
	3.3.2.2 Field Operating Procedure
IV	THEORY OF OPERATION
	4.1 GENERAL
	4.2 SYSTEM FUNCTIONS
	4.2.1 SPECTROMETER UNIT
	4.2.1.1 Block Diagram
	4.2.1.2 Detailed Description
	4.2.2 READOUT/CONTROL UNIT
	4.2.2.1 Block Diagram
	4.2.2.2 Detailed Description

APPENDIXES

Appendix	Title
A	DETECTOR/DEWAR ASSEMBLY
B	DETECTOR COOLING SYSTEM
C	INTERCONNECTING WIRING DIAGRAM
D	IC 2500 CASSETTE TAPE DRIVE TECHNICAL MANUAL

ILLUSTRATIONS

Figure	Title
II-1	Spectrometer System
II-2	Spectrometer System in Field-Deployment Check-Out Configuration
II-3	Spectrometer Unit Control Panel
II-4	Readout/Control Unit
II-5	Portable Spectrometer Block Diagram
II-6	Spectrometer Unit
II-7	Spectrometer Unit — Top of Chassis
II-8	Spectrometer Unit — General Tape Format
II-9	Spectrometer Unit — Hinge Side of Chassis
II-10	General Tape Format
II-11	Power Distribution and Control
II-12	Readout/Control Unit Block Diagram
III-1	Spectrometer Unit Control Panel
III-2	RCU Control Panel
IV-1	Spectrometer Unit Block Diagram
IV-2	Gross-Count Detector Schematic Diagram
IV-3	Gross-Count Control Logic
IV-4	Gross-Count Display Logic
IV-5	Gross-Count Threshold Logic Schematic
IV-6	Seismic Detection Threshold Amplifier
IV-7	Seismic Detection Control Logic
IV-8	Timing System, Oscillator/Divider Logic
IV-9	Timing System, Accumulator Buffer Logic
IV-10	Timing Diagram, Elapsed-Time Clock

ILLUSTRATIONS (contd)

Figure	Title
IV-11	System-Mode Control Buffer
IV-12	Control Logic
IV-13	Logic, Data Formatter and Tape Controller
IV-14	Checksum Generation Logic
IV-15	Readout/Control Unit Logic

TABLES

Table	Title
III-1	Spectrometer Unit Test Points and Fuses

SECTION VI
CONCLUSIONS

The study program was completed in reference to Phase II goals with the following conclusions:

- A gamma-ray spectrometer system was developed and fabricated using mostly commercially available, off-the-shelf components.
- Operational feasibility was demonstrated through laboratory testing
- Most design goals regarding performance and physical characteristics were achieved.

The most notable accomplishment was made in designing and operating a man-portable self-powered system which employs an intrinsic germanium detector. However, the following features did not meet design goals:

- The detectors supplied to the project on a GFE basis exhibited excessive leakage current, thermal resistance and total mass.
- System conversion gain and consequently single-channel width were approximately 5 percent below design specifications.
- The best attainable total system resolution was 3.51 keV (FWHM) at 1.114 MeV, or 17 percent over the design goal of 3.0 keV.
- The detector/Dewar assembly contained excessive heat transfer resistance between the detector and the coolant source. The result was excessive time and gas requirements for detector cool-down and operation.
- The weight of the spectrometer unit was 16.5 pounds over the 45-pound design specification.

The overall program goal of establishing system design feasibility was successfully attained. Texas Instruments believes that if the GFE detectors had been delivered on schedule, essentially all variances to design goals and all operational "bugs" would have been eliminated.

SECTION VII

RECOMMENDATIONS

The following recommendations are made in relation to the conclusions presented in the previous section:

- Of primary importance to improving the overall system performance is the correction of detector shortcomings. Specifically, leakage current must be reduced significantly and thermal conductivity between the detector and its can must be maximized. A reduction of detector assembly capacitance is recommended to improve system resolution. It is desirable to reduce the detector mass to ease the heat load placed on the cooling system; however, this reduction should not be accomplished at the expense of germanium volume which would degrade detector efficiency.
- If there is a requirement for higher resolution, an increase in system conversion gain is recommended. However, this process requires the system to be returned to the ADC vendor for extensive adjustments.
- A new or revised detector/Dewar assembly design is strongly recommended to reduce cool-down time, gas requirements, and total assembly electrical capacitance. The thermal design factors must maximize heat transfer from the detector to the liquid coolant.
- Many features, components and assemblies should be modified to reduce the spectrometer unit weight. The battery pack, cooling system, and total system packaging materials and design should be examined for maximum impact on weight reduction.

APPENDIX A

RECOMMENDED SPARE PARTS LIST

APPENDIX A

RECOMMENDED SPARE PARTS LIST

The following spare parts lists for the spectrometer system were generated on the assumption of the system's primary use in a laboratory environment by personnel who are technically qualified in electronics repair and maintenance.

The items in Table A-1 should be spared at the module level

Table A-1

RECOMMENDED MODULE-LEVEL SPARES FOR SPECTROMETER UNIT

Item	Vendor	Part No.
Gross-count detector assembly	Texas Instruments	C138690
Gross-count threshold logic	Texas Instruments	C138719
Gross-count control logic	Texas Instruments	C138722
Gross-count display logic	Texas Instruments	C138725
Switching regulatory	Texas Instruments	C138734
Power switches	Texas Instruments	C139232
Timing system accumulator	Texas Instruments	C139235
Timing system oscillator/ divider	Texas Instruments	C139238
Seismic detection assembly	Texas Instruments	C139255
Battery assembly	Texas Instruments	D139240
Cassette tape system	Interdyne	Model 2500

The items in Table A-2 should be spared at the component level.

Table A-2

RECOMMENDED COMPONENT-LEVEL SPARES FOR SPECTROMETER UNIT

Component	Vendor	Part Number
Network, IC	RCA	CD4001AD
		4002AD
		4008
		4009
		4010
		4011
		4012
		4013
		4015
		4016
		4017
		4019
		4020
		4021
		4023
		4024
		4025
		4027
	RCA	CD4030AD
	Texas Instruments	SN74LS02N
		74LS04N
		74LS20N
		74LS197N
Network, IC	Texas Instruments	SN74L193N
Network, resistor	Helipot	898-1-R22K
	Helipot	898-1-R2K
	A-B	RC05GF473J
		05GF103J
		05GF223J
		05GF222J
Network, resistor	A-B	RC05GF104J
Capacitor	Sprague	CS136154KM
Capacitor	Mallory	MTP226M015P1A
Diode	Texas Instruments	1N914
Transistor	Texas Instruments	TIS92
Transistor	Texas Instruments	TIS93

Table A-2 (Contd)

Component	Vendor	Part Number
Capacitor	Sprague	CM05FD331J3
Resistor	A-B	RC07GF203J
Resistor	A-B	RC07GF103J
Diode, zener	TRW	LVA56A
Network, memory	Texas Instruments, Fairchild, Intel, Nat'l	1103
Network, IC	Texas Instruments	SN7475N
↕	↕	SN7426N
		SN7406N
		SN74L86N
		74H00N
		74H04N
		74H08N
		74H51N
		74123N
		74122N
	Texas Instruments	74H10N
Network, IC	Signetics	8094
Network, resistor	Helipot	898-1-R1K
Network, resistor	Helipot	898-1-R15K

Items of the readout/control unit listed in Table A-3 should be spared at the component level.

Table A-3

RECOMMENDED COMPONENT-LEVEL SPARES FOR READOUT/CONTROL UNIT

Component	Vendor	Part Number
Switch	Microswitch	8A1021
Switch	Microswitch	8A1011
Switch	Microswitch	8A2011
Relay	Potter-Brumfield	KR-5-AK-120
Power supply	Powertec	9D5-5
Battery	Globe	GC-680
Diode	General Electric	A15F

Table A-3 (Contd)

Component	Vendor	Part Number
Switch	Grayhill	9A30-2-1-4N
Switch	Grayhill	9A30-1-1-3N
Lamp	Shelly	TE201E-229AML
Digital-analog converter	Zeltex	ZD432
Integrated Circuit	Texas Instruments	SN5430N
↕	↕	54L00N
		54L02N
		54L03N
		54L04N
		54L10N
		54L51N
		54L74N
		54L93N
		54L95N
Integrated Circuit	Texas Instruments	SN54L122N
Oscillator	Conner-Winfield	L14A
Potentiometer	TRW	990-2K-POT
Resistor Network	Helipot	898-1-22K
Resistor Network	Helipot	898-1-10K
Capacitor	Sprague	CM05PD331J3
↕	U.S. Capacitor Corp.	CN20C333J
	U.S. Capacitor Corp.	CN10C101J
	Sprague	CS13G154KM
	Mallory	MTP106M010P1A
Capacitor	Mallory	MTP226M015P1A
Resistor	A-B	RC07GF203J
↕	↕	07GF103J
		05GF104J
		05GF222J
		05GF223J
		05GF473J
Resistor	A-B	RC05GF103J
Diode	Texas Instruments	1N914
Transistor	Texas Instruments	TIS92
Transistor	Texas Instruments	TIS93
Power converter	S.C.I.	DD5-2.15.100
Potentiometer	Amphenol	3805P-103