AD 763 358

LIBRARY
TECHNICAL REPORT SECTION
NAVAL POSTGRADUATE SCHOOL
MONTEREY, CALIFORNIA 93940

NUC-TP-284

# AN INTRODUCTION TO MARINE MAMMAL TECHNOLOGY

Edited by

LT. H. W. Goforth and others.

Undersea Surveillance and Ocean Sciences Department

June 1973 v.p.

Approved for public release; distribution unlimited.

NAVAL UNDERSEA CENTER, SAN DIEGO, CA. 92132

AN ACTIVITY OF THE NAVAL MATERIAL COMMAND

ROBERT H. GAUTIER, CAPT, USN
Commander

Wm. B. McLEAN, Ph.D.
Technical Director

## ADMINISTRATIVE STATEMENT

The work reported was conducted during fiscal year 1970 at the NUC Hawaii Laboratory, Kaneohe, as part of the Advanced Marine Biological Systems Program, U38-12, sponsored by the Naval Ordnance Systems Command under Project Number P08-0383.

Released by

B. A. POWELL
Associate for Biosystems Program

Under authority of

G. B. ANDERSON, Head
Undersea Surveillance and
Ocean Sciences Department

UNCLASSIFIED
Security Classification

## DOCUMENT CONTROL DATA - R & D

*(Security classification of title, body of abstract and indexing annotation must be entered when the overall report is classified)*

| | |
|---|---|
| 1. ORIGINATING ACTIVITY *(Corporate author)*<br>Naval Undersea Center<br>San Diego, California 92132 | 2a. REPORT SECURITY CLASSIFICATION<br>UNCLASSIFIED<br>2b. GROUP |

3. REPORT TITLE

AN INTRODUCTION TO MARINE MAMMAL TECHNOLOGY

4. DESCRIPTIVE NOTES *(Type of report and inclusive dates)*

Research and Development, July 1969 – June 1970

5. AUTHOR(S) *(First name, middle initial, last name)*

H. W. Goforth, C. A. Bowers, D. I. McSheehy, M. E. Conboy

| | | |
|---|---|---|
| 6. REPORT DATE<br>June 1973 | 7a. TOTAL NO. OF PAGES | 7b. NO. OF REFS |
| 8a. CONTRACT OR GRANT NO.<br>b. PROJECT NO. P08-0383<br>c.<br>d. | 9a. ORIGINATOR'S REPORT NUMBER(S)<br>TP 284<br>9b. OTHER REPORT NO(S) *(Any other numbers that may be assigned this report)* | |

10. DISTRIBUTION STATEMENT

Approved for public release; distribution unlimited.

| | |
|---|---|
| 11. SUPPLEMENTARY NOTES | 12. SPONSORING MILITARY ACTIVITY<br>Naval Ordnance Systems Command<br>Washington, D. C. 20360 |

13. ABSTRACT

This report comprises written versions of five lectures given during an introductory course of instruction in marine mammal technology. The topics covered are the history of marine mammal technology, the classification and description of common species, natural and trained behaviors of small cetaceans and sea lions, and methods of capture, selection, and transport.

DD FORM 1 NOV 65 1473 (PAGE 1)
0102-014-6600

UNCLASSIFIED
Security Classification

| 14. KEY WORDS | LINK A ROLE | LINK A WT | LINK B ROLE | LINK B WT | LINK C ROLE | LINK C WT |
|---|---|---|---|---|---|---|
| Aquatic animals | | | | | | |
| Marine mammals | | | | | | |
| Cetacea | | | | | | |
| Porpoises | | | | | | |
| Dolphins (mammals) | | | | | | |
| Seals | | | | | | |
| Animal behavior | | | | | | |
| Animal training | | | | | | |

## PREFACE

In January 1970 the Naval Undersea Research and Development Center gave a course of instruction at its Hawaii laboratory. The purpose of the course was to introduce people who had no previous experience with marine mammals to NUC's research and development programs involving these animals. The regular students were eight military personnel: two officers, five petty officers, and one seaman. Civilian trainers sat in on lectures of interest.

The course represented a first attempt at formally indoctrinating a group of military and civilian personnel concerning the present state of marine mammal technology. It was based on a plan developed by R. E. Blanchard and R. H. Schneider of Integrated Sciences Corporation and Lt. H. W. Goforth of NUC's Hawaii laboratory. Seven instructors, military and civilian, were drawn from the personnel of the Hawaii laboratory who were knowledgeable in appropriate fields. Collectively the instructors represented 45 years of experience with marine mammals.

The present book comprises written versions of five of the lectures given during the course. Visual aids and other prepared materials are included as illustrations and tables. Though the book differs from the course, its purpose remains the same: to provide the newcomer to the field with a basic introduction to marine mammal technology and a starting point for further, more detailed study.

Chapter 1 presents the recent historical background, recounting some of the significant twentieth-century developments in marine mammal technology and offering a perspective on current activity in the field. Chapter 2 introduces a variety of different marine mammals, describing the principles of their scientific classification and some of their individual characteristics. In chapter 3 the behavior of porpoises is described and in chapter 4 that of sea lions; these chapters also contain a good deal of information on training and training procedures. Chapter 5 describes methods of capture, selection, and transport.

To a certain extent the chapters are independent and can be read separately or out of sequence. But the most benefit will be derived by taking up each one in order. In chapter 5, for example, the reader will find it helpful to know something about the common species of marine mammals (chapter 2) and their behavior (chapters 3 and 4), particularly their fear reactions.

In a book such as this one, written by a number of people, repetition is unavoidable. This is an advantage to the reader, however, because it provides a changing perspective on important subjects. An index has been included to provide ready access to the various contexts in which each subject is discussed.

H. W. G.

CONTENTS


| | |
|---|---|
| 1. HISTORICAL INTRODUCTION, by Lt. H. W. Goforth | 1.1 |
| Bibliography | 1.2 |
| 2. TAXONOMY, by Lt. H. W. Goforth | 2.1 |
| Phylogenetic Tree of Mammals | 2.1 |
| Binomial Nomenclature | 2.3 |
| Controversial Terms | 2.3 |
| Taxonomic Glossary | 2.6 |
| Appendix 2.1. Taxonomy Quiz | 2.11 |
| Appendix 2.2. Taxonomy Quiz Answers | 2.14 |
| 3. BEHAVIOR OF CETACEANS, by C. A. Bowers | 3.1 |
| Training | 3.1 |
| Feeding | 3.4 |
| Typical Behavior | 3.5 |
| Potential Applications of Cetacean Research | 3.10 |
| 4. BEHAVIOR OF SEA LIONS, by D. I. McSheehy | 4.1 |
| Natural Behavior | 4.1 |
| Learned Behavior | 4.3 |
| Potential of Sea Lions | 4.5 |
| 5. CAPTURE, SELECTION, AND TRANSPORT, by M. E. Conboy | 5.1 |
| Capture Methods | 5.1 |
| Selection | 5.8 |
| Transport | 5.11 |
| Adaptation | 5.26 |
| Points to Remember | 5.27 |
| 6. INDEX | 6.1 |

# 1. HISTORICAL INTRODUCTION

by Lt. H. W. Goforth

Study of marine mammals and successful attempts to train some species of sea lions date from the nineteenth century and before. The developments that enable one to speak of a "marine mammal technology," however, have taken place mostly in the present century, many of them only since 1950. The purpose of this chapter is to recount some of these developments to provide the reader with a better understanding of the present state of marine mammal technology. Briefly covered will be the history of attempts to maintain cetaceans in captivity, the gradual advance in medical technology, the discovery of cetacean "sonar," and the first open-ocean releases. At the conclusion a brief account of the Navy's entrance into the marine mammal field will also be presented.

In the United States the first attempt to maintain Atlantic bottlenosed dolphins *(Tursiops truncatus)* in captivity was probably made in 1914 at the New York Aquarium. This attempt proved unsuccessful, and the small group of animals died in a short time. In 1938 a similar attempt at Marine Studios, St. Augustine, Florida (now Marineland of Florida), was successful. Since then the bottlenosed dolphin has been on continuous display to the public in an increasing number of occanariums and has become one of the most studied and best known of marine mammals.

Another marine mammal that has become a familiar inhabitant of oceanariums is the pilot whale. The first pilot whale was displayed as recently as 1948, more than three decades after the first bottlenosed dolphins. This animal, a member of the Atlantic species *Globicephala macrorhyncha*, was rescued by Marine Studios from a Florida beach and is the only stranded pilot whale ever to survive in captivity. Some nine years later, in 1957, Marineland of the Pacific made the first capture of a pilot whale *(G. scammoni)* while on a planned collecting trip.

The first killer whale *(Orcinus orca)* was captured and placed on display in 1962, when Marineland of the Pacific netted a female that had come into the turning basin at Newport Harbor, California. This old animal refused to eat and died after two or three days on display. In 1964 a second killer whale, captured at Vancouver, British Columbia, survived for a month in captivity. Believed to be a female and called "Moby Doll," this animal was discovered after death to be a male. In 1965 the famous Namu was captured and displayed at the Seattle Aquarium for over a year before dying in an attempt to escape through the nets of his enclosure. His attempted escape was perhaps the result of a desire for a mate.

Success in maintaining captive marine mammals can be attributed to growing knowledge of their health requirements and discovery of methods for treating and preventing their diseases. Not even a small part of the modern developments in marine mammal medicine can be reviewed here, but an idea of the progress in this field can be obtained from the history of attempts to anesthetize porpoises. The first was made in 1928 by O. R. Langworthy. The subject, an Atlantic bottlenosed dolphin, stopped breathing and died shortly after losing consciousness. This and similar unsuccessful attempts, such as those of the 1950's by John Lilly and his associates, suggest that porpoises breathe consciously and that

the use of anesthetics which produce unconsciousness suppresses their center of respiratory control. The first successful anesthetization was performed in 1964 by E. L. Nagel and his associates, who used nitrous oxide and a specially designed respirator which kept the animal breathing by mechanical means while he was unconscious. With nitrous oxide, however, Nagel was unable to achieve deep anesthesia, and he later supplemented this drug with succynal choline, an immobilizing agent. S. H. Ridgway of NUC was the first to achieve successful deep anesthetization of a porpoise.

Growing knowledge in the field of health and medicine has been paralleled by advances in other fields. One of the most significant has been the discovery that porpoises and other whales use echolocation or "sonar" (listening to the echoes of sounds they make) to supplement or replace eyesight. In 1947 A. F. McBride of Marine Studios made some notes of observations he obtained from the captain of a collecting crew. These notes, describing how Atlantic bottlenosed dolphins were able to maneuver around nets in water of low visibility, were published in 1956 by William Schevill. In the same year Schevill and Barbara Lawrence published their own observations of a captive porpoise's ability to find fish in turbid water. In 1958 W.N. Kellogg described controlled experiments suggesting among other things that captive porpoises were using sonar to detect underwater objects, and in 1960 K. S. Norris showed that a porpoise blindfolded with soft rubber suction cups could swim through a maze of pipes. Discovery of the echolocating ability of cetaceans opened up a new area of research. Studies today are seeking to determine the sites of sound transmission and reception, the frequencies used, the method of discrimination, and answers to other related questions.

A culminating point of all these developments has been the training of marine mammals within the last decade to work untethered in the open ocean. In this field the Navy's animals and their trainers have played an especially prominent role. The first sea lion (*Zalophus californianus)* was released in 1964 by W. E. Evans and Wally Ross of the Navy's Marine Bioscience Facility at Point Mugu, California. Later in the same year Robert Bailey, also of the Marine Bioscience Facility, released the first Atlantic bottlenosed dolphin (*Tursiops truncatus*). The year of the whales was 1970, when Clark Bowers of NUC's Hawaii Laboratory released the first pilot whale (*Globicephala macrorhyncha*) in April and the first killer whale (*Orcinus orca*) in July.

The Navy entered the marine mammal field a little more than a decade ago, in 1960, with the acquisition of "Notty," a Pacific white-sided dolphin (*Lagenorhynchus obliquidens*). Notty took her name from NOTS, the acronym for the Naval Ordnance Test Station at China Lake, California, under whose direction the Navy's marine mammal program had its start. Notty's trainer was Ralph Penner, who was hired under contract to prepare the animal for the hydrodynamic studies of T. G. Lang and Dorothy Daybell. These studies were carried out in a towing tank of Convair Division of General Dynamics in San Diego. In 1962 the Marine Bioscience Facility was established at Point Mugu. From this facility branched the Navy's two present marine mammal laboratories at San Diego and Kaneohe Bay, Hawaii.

## BIBLIOGRAPHY

Bailey, R. E., "Training and Open Ocean Release of an Atlantic Bottlenose Porpoise, *Tursiops truncatus* (Montagu)," U. S. Naval Ordnance Test Station, China Lake, Calif., NOTS TP 3838, July 1965.

Evans, W. E., and S. R. Harmon, "Experimenting with Trained Pinnipeds in the Open Sea," in R. J. Harrison *et al.*, edd., *The Behavior and Physiology of Pinnipeds*, Appleton-Century-Crofts, New York, 1968.

Kellogg, W. N., "Echo Ranging in the Porpoise," *Science*, v. 128 (1958), p. 982.

Lang, T. G., and D. A. Daybell, "Porpoise Performance Tests in a Sea-Water Tank," U.S. Naval Ordnance Test Station, China Lake, Calif., NOTS TP 3063, Jan. 1963.

Langworthy, O. R., "A Description of the Central Nervous System of the Porpoise *(Tursiops truncatus)*," *Journal of Comparative Neurology*, v. 54 (1932), p. 437.

Lilly, J. C., *Man and Dolphin*, Doubleday and Co., New York, 1961.

Nagel, E. L., P. J. Morgane, W. L. McFarland, "Anesthesia for the Bottlenose Dolphin," *Science*, v. 146 (1964), p. 1591.

Norris, K. S., J. H. Prescott, P. V. Asa-Dorian, and Paul Perkins, "An Experimental Demonstration of Echolocation Behavior in the Porpoise *Tursiops truncatus* (Montagu)," *Biological Bulletin*, v. 120 (1961), p. 163.

Ridgway, S. H., and J. G. McCormick, "Anesthesia for Major Surgery in Porpoises," *Science*, v. 158 (1967), p. 510.

Schevill, W. E., and A. F. McBride, "Evidence for Echolocation by Cetaceans," *Deep-Sea Research*, v. 3 (1956), p. 153.

Schevill, W. E., and Barbara Lawrence, "Food-Finding by a Captive Porpoise *(Tursiops truncatus)*," *Breviora*, Museum of Comparative Zoology, No. 53, Cambridge, Mass., April 6, 1956.

# 2. TAXONOMY

by Lt. H. W. Goforth

Taxonomy is the science that deals with the laws and principles of classification. By successive segregations it provides an ordered classification of living things, according to their evolutionary relationships.

A look at the taxonomic structure shows that all living things are commonly placed in one of two groups, or "kingdoms": the animal kingdom and the plant kingdom.* Each kingdom is divided into a number of phyla; each phylum into classes; each class into orders; each order into families; each family into genera; and each genus into species.† Each of the above divisions is sometimes further divided into subclasses, suborders, subfamilies, etc. This system is an invaluable tool and is not as complicated as it may at first appear.

All marine mammals belong to the animal kingdom, the vertebrate phylum, and the mammalian class. From this point they diverge into four orders. Whales constitute the order Cetacea. Sea cows, manatees, and the dugong are the Sirenia. The seals, sea lions, and walrus make up the order Pinnipedia. The sea otter is the sole marine member of an otherwise terrestrial order, the Carnivora, which includes such familiar animals as the dog and cat.

## PHYLOGENETIC TREE OF MAMMALS

Figure 2.1 is a phylogenetic or family tree of the class Mammalia. It shows the evolution of the mammals from a common ancestor who lived some 300 million years ago. The various lines of evolution are the basis of the division of the Mammalia into orders.

Note that the three principal orders of marine mammals evolved independently of each other. The cetaceans, though evolved from a terrestrial ancestor, are not closely related to any living terrestrial mammal. They are divided into three suborders: the Archaeoceti (extinct whales), Mysticeti (baleen whales), and Odontoceti (toothed whales). The sirenians are evolved from primitive hoofed animals and are related to the modern elephants. The pinnipeds, like the members of the carnivore order, are evolved from a primitive dog-like ancestor.

A more detailed phylogenetic tree would show the further evolution of marine mammals into families, genera, and species. A complete tree would show the course of evolution from the first true chordate (ancestor of all vertebrate animals) up to each modern species.

---

*Some publications have introduced three additional kingdoms, Protista, Monera, and Fungi, to account for borderline organisms.

†Several of the divisions have names of Latin origin which do not form their plurals in the normal English way. Thus *phyla* is the plural of *phylum* and *genera* of *genus*. The term *species* is the same in both singular and plural.

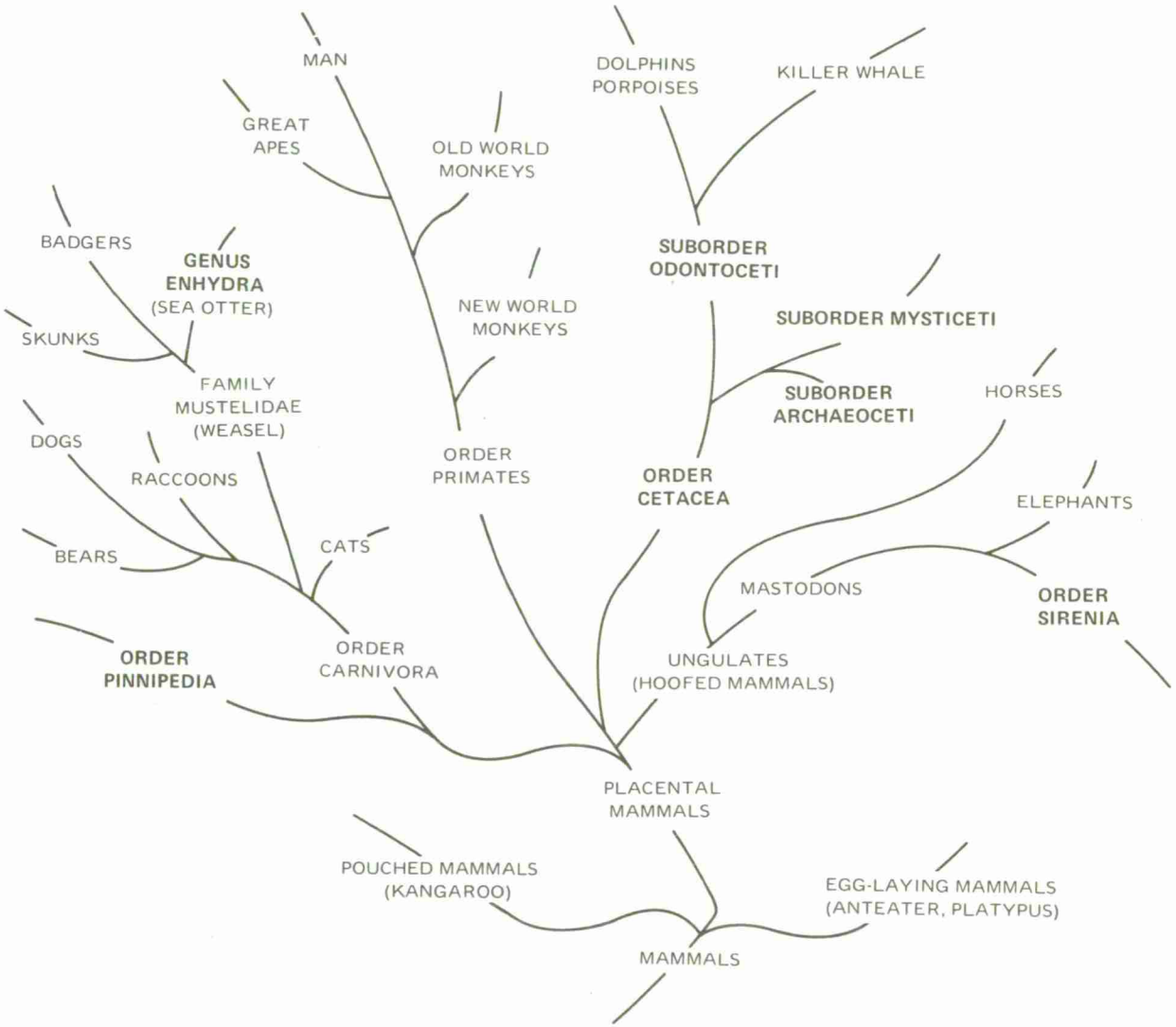


Figure 2.1. Phylogenetic tree of mammals, showing evolutionary relationships of the orders and suborders of marine mammals. Adapted with permission from Alfred S. Romer, *The Vertebrate Body*, 4th ed., W. B. Saunders Co., Philadelphia, 1962, pp. 65, 67, 69, 70.

The division of the orders and suborders of marine mammals into families and of some of the larger families into genera or species is shown in table 2.1. For the Delphinidae, Otariidae, and Phocidae representative species only are shown.

## BINOMIAL NOMENCLATURE

Taxonomy had its beginning with the Greek philosopher and scientist Aristotle (382-322 B.C.). The founder of the modern science, however, and the most noted taxonomist of all time, was the Swedish botanist Carl von Linné (1707-1778), known as Linnaeus.

Linnaeus introduced, among other things, the binomial method which has become the standard scientific way of naming living things. By this method each variety of plant and animal bears a unique name made up of two terms, the name of its genus and a descriptive term designating its species. An example is provided by the scientific name of the Atlantic bottlenosed dolphin: *Tursiops truncatus.**

The use of scientific names avoids the confusion that often arises when common names are used. Both parts of the scientific name are necessary if a species is to be clearly and unambiguously identified. When a name is frequently repeated in an article or any context where its meaning is well established, however, the term for the genus may be abbreviated to its initial letter. Thus *Tursiops truncatus,* for example, may become *T. truncatus.*

## CONTROVERSIAL TERMS

### "Aquatic Mammal" and "Marine Mammal"

"Aquatic" means "growing or living in or upon water," while "marine" is more specific, meaning "inhabiting, found in or formed by the sea or ocean." If we apply these definitions strictly, then polar bears are marine mammals and freshwater dolphins are not, for polar bears live on or beside the ocean and feed on marine fish, while freshwater dolphins live in rivers and lakes and feed on freshwater fish. Nonetheless the term "marine mammal" normally excludes polar bears and includes freshwater dolphins. It is not our intention here to argue against established usage but only to point out that it is inconsistent and may be confusing unless understood.

### "Porpoise" and "Dolphin"†

The most controversial terms in the marine mammal field are undoubtedly the common names for certain smaller cetaceans, "porpoise" and "dolphin." These terms are used in two different ways to designate members of the family Delphinidae of the suborder

*Taxonomic style calls for the italicization (or underlining) of the names of genera and species and the capitalization of the names of genera; the names of kingdoms, phyla, orders, suborders, and families are capitalized but not italicized.

†The author is indebted to F. G. Wood of NUC's Ocean Sciences Department for much of the information included in this section.

Table 2.1. Classification of Selected Marine Mammals

Order Cetacea (all whales)

Suborder Archaeoceti (extinct whales)

Suborder Mysticeti (whales with baleen and paired blowholes)

Family Balaenidae (bowhead whale and others)
Family Balaenopteridae (blue whale, humpback whale, and others)
Family Eschrichtiidae (gray whale)

Suborder Odontoceti (whales with teeth and a single blowhole)

Family Platanistidae

*Platanista gangetica* (Ganges River dolphin)
*Inia geoffrensis* (Amazon River or pink dolphin)
*Lipotes vexillifer* (Chinese lake dolphin)
*Pontoporia blainvillei* (La Plata River dolphin)

Family Delphinidae (species under study by NUC are indicated by an asterisk)

*Steno bredanensis* (rough-toothed dolphin)
**Tursiops truncatus* (Atlantic bottlenosed dolphin)
*Tursiops gilli* (Pacific bottlenosed dolphin)
**Lagenorhynchus obliquidens* (Pacific striped or white-sided dolphin)
*Stenella graffmani* (Pacific spotted dolphin)
*Stenella* species (Hawaiian spinner dolphin)
**Delphinus delphis* (common dolphin)
*Pseudorca crassidens* (false killer whale)
**Globicephala scammoni* (pilot whale or blackfish)
**Orcinus orca* (killer whale)
*Phocoena phocoena* (harbor porpoise)
*Phocoenoides dalli* (Dall's porpoise)

Family Monodontidae

*Delphinapterus leucas* (white whale or beluga)
*Monodon monoceros* (narwhal)

Family Physeteridae

*Physeter catodon* (sperm whale, the largest odontocete)
*Kogia* species (pygmy and dwarf sperm whales)

Family Ziphiidae

Genera *Mesoplodon*, *Hyperoodon*, and others (beaked whales)

Table 2.1. Classification of Selected Marine Mammals (Continued)

**Order Pinnipedia** (sea lions, seals, walrus)

Family Otariidae (sea lions and fur seals)

*Zalophus californianus* (California sea lion, used in circuses and at NUC)
*Eumetopias jubatus* (northern or Steller's sea lion, also worked with at NUC)

Family Odobenidae (walrus, restricted to the Arctic)

Family Phocidae

*Phoca vitulina* (harbor seal)
*Monachus schauinslandi* (Hawaiian monk seal, found on leeward chain of the Hawaiian Islands from French Frigate Shoals to Kure Atoll)
*Mirounga leonina* (southern elephant seal)
*Mirounga angustirostris* (northern elephant seal)

**Order Sirenia** (sea cows, manatees, dugong—vegetarians which, except the dugong, inhabit river tributaries and brackish water)

**Order Carnivora** (sea otter and related terrestrial species)

Family Mustelidae

*Enhydra lutris* (sea otter)

Odontoceti. To add to the confusion there is a popular game and food fish also known by the name "dolphin." This dolphin is of course not related to any of the cetaceans.

In the past seafarers and coastal inhabitants of English-speaking countries generally referred to all small whales as "porpoises." Today many authorities in the United States continue to think that "porpoise" is a perfectly good word for any small cetacean of the delphinid family. But to most zoologists in Europe, and to some in the United States and Canada, this term is reserved for the "true" porpoises, such as the harbor porpoise *(Phocoena phocoena)*, which are sometimes placed in a separate family, the Phocoenidae. The rest of the delphinids are considered dolphins, except of course the bigger ones dignified with the name "whale," such as the killer whale *(Orcinus orca)* and pilot whale (genus *Globicephala*).

It is difficult to maintain the distinction between porpoises and dolphins on the basis of external appearance. Dolphins are usually said to have pointed snouts or "beaks" and conical teeth, while porpoises are supposed to be blunt-headed and have spade-shaped teeth. These characteristics provide a rough guide to the members of the two groups. But a number of "true" dolphins are blunt-headed, lacking a distinct beak, and Dall's porpoise *(Phocoenoides dalli)* does not have spatular teeth.

It should be clear then that whether to use "porpoise" or "dolphin" is in many instances a matter of personal choice. Some American cetologists use "porpoise" exclusively, while others reserve the term for the "true" porpoises. But many follow neither practice consistently, using the term which seems appropriate to the context or moment. Since the use of the common names may lead to uncertainty or misunderstanding, the best practice is to couple them with the scientific name. When this practice is followed, successful communication is usually assured. The "common dolphin" is also known as the "white-bellied porpoise" (by West Coast fishermen) and "saddleback porpoise" (by East Coast fishermen) but is always *Delphinus delphis*. Likewise the Atlantic bottlenosed "dolphin" is often called a "porpoise" but remains *Tursiops truncatus*.

## TAXONOMIC GLOSSARY

Careful reading of the taxonomic glossary given in table 2.2 will provide a good basis for further study of marine mammals. The coverage of this glossary is by no means complete, and a large proportion of the 120 existing species of marine mammals has been purposely excluded. The emphasis is on species which have been successfully captured and trained and which will be met in the later pages of this book.

A short quiz is included in Appendix 2.1 to enable the reader to test his newly acquired knowledge. The answers are given in Appendix 2.2.

Table 2.2. Taxonomic Glossary*

**Archaeoceti.** The suborder Archaeoceti comprises the ancient, extinct whales or archaeocetes. (From Greek *archaios,* ancient + Latin *cetus,* whale.)

**Carnivora.** The order Carnivora includes a number of familiar terrestrial mammals, such as the dog, cat, and bear, and a single marine mammal, the sea otter *(Enhydra lutris)* of the Pacific. (From Latin *caro,* flesh + *vorare,* to devour.)

**Cetacea.** The order Cetacea comprises the whales or cetaceans. It is divided into three suborders, Archaeoceti, Mysticeti, and Odontoceti. (From Latin *cetus,* whale.)

**Delphinidae.** The family Delphinidae belongs to the suborder Odontoceti. It includes more than half of the recognized species of whales. Some of the more familiar delphinids are the bottlenosed dolphin (genus *Tursiops*), the pilot whale (genus *Globicephala*), the killer whale *(Orcinus orca),* the harbor porpoise *(Phocoena phocoena),* and the common dolphin *(Delphinus delphis).* NUC is presently conducting studies of several members of this family. (From Latin *delphinus,* dolphin.)

**Delphinus delphis.** *D. delphis,* the common dolphin, is distributed in the warm and temperate waters of the Atlantic and Pacific oceans. This is the species that has been depicted in art for thousands of years. NUC is presently studying its migratory behavior.

**Enhydra lutris.** *E. lutris,* the sea otter, is a member of the weasel family and closely related to the river otters. The male reaches a length of 4-1/2 feet (including the 10- to 12-inch tail) and weighs up to 80 pounds. The female reaches a length of 4 feet and a weight of 45 pounds. Sea otters have stubby, rounded forepaws with poorly developed fingers, yet can use their paws for holding objects. Their hind feet are large, webbed, and with the tail are used for swimming. A northern variety inhabits the coastal waters of Alaska, a southern variety those of Monterey County, California.

**Eumetopias jubatus.** *E. jubatus,* the northern or Steller's sea lion, is found from the Bering Strait of Alaska to Southern California. It is tawny or yellowish brown in color in contrast to the darker California sea lion *(Zalophus californianus).* It also attains a much greater size, males reaching a weight of 1500 to 1800 pounds or more and a length of 13 feet and females 600 pounds and 9 feet. Its diet consists of fish, squid, and sometimes lampreys.

*Based on E. J. Slijper, *Whales,* trans. A. J. Pomerans, Basic Books, Inc., New York, 1962; D. W. Rice and V. B. Scheffer, "A List of the Marine Mammals of the World," U.S. Fish and Wildlife Service, Washington, D.C., Special Scientific Report–Fisheries No. 579, Dec. 1968; and A. E. Daugherty, *Marine Mammals of California,* State of California, Department of Fish and Game, Sacramento, 1965.

**Genus Globicephala.** The pilot whale, genus *Globicephala*, sometimes called the "blackfish" or "pothead" on the Atlantic coast of the U.S., commonly measures 18 feet, but some specimens reach 22 feet in length. In color it is entirely black or brownish gray, with a faintly marked lighter saddle behind the dorsal fin and a midventral gray blaze mark. Its most striking feature is its bulbous forehead or melon, from which it derives one of its nicknames. The Atlantic species are *G. melaena* and *G. macrorhyncha*. The Pacific species, *G. scammoni*, ranges from Alaska to Peru.

**Inia geoffrensis.** The Amazon River dolphin, *I. geoffrensis*, found in the upper Amazon and Orinoco Rivers of South America, grows to be about 9 feet long. It is gray on top, white or pink beneath, and has small, beady eyes and a long beak about the diameter of a broom handle. This species is one of a family of freshwater dolphins, two in South America and two in Asia, considered to be the most primitive odontocetes.

**Lagenorhynchus obliquidens.** The Pacific striped or white-sided dolphin, nicknamed the "lag," is found in the North Pacific from Alaska to Baja California. Other similar species (*L. albirostris*, *L. acutus*, etc.) are found in the Atlantic and Indian oceans. *L. obliquidens* reaches at least 7 feet and sometimes more in length. The snout is pointed, but the beak is short and only faintly defined. The body is blackish above and white below, with a clear line of demarcation between the colors. A characteristic light streak along either side of the posterior part of the back makes this species easy to identify. There is also usually a light-colored patch on the dorsal fin. The profile resembles the killer whale's *(Orcinus orca)*, and for this reason the lag is sometimes called the "midget orca."

**Monodon monoceros.** *M. monoceros*, the narwhal, an inhabitant of Arctic regions and close relative of the white whale, attains a length of 15 feet. Its distinctive feature is a clockwise spiraled tusk, present only in males, which is an extreme development of a tooth and extends 9 to 12 feet from the front of the head. Narwhals often inhabit shallow waters but have been reported to make deep dives.

**Mysticeti.** The mysticetes make up one of the three suborders of whales. They have paired blowholes and plates of a horny substance, known as "baleen" or "whalebone," instead of teeth. These plates, which hang from the upper jaw, are frayed at the edge and are used to collect the small, shrimplike crustaceans (euphausids) and other plankton which the mysticetes feed on. Their large tongue is used periodically to wipe the baleen of its collection of plankton. Most of the larger whales are mysticetes. The largest animal now or ever in existence, the blue whale (now on the list of endangered species), belongs to this order. It grows to a length of 100 feet and a weight of 150 tons. NUC scientists have recorded its low-frequency sounds, so powerful that they are probably heard by the whales over great distances. Studies are being conducted of the sounds' repetitive, songlike characteristics.

**Odobenidae.** The family Odobenidae belongs to the order Pinnipedia. It comprises the walrus *(Odobenus rosmarus)*, an inhabitant of the arctic waters of the Atlantic and Pacific oceans.

**Odontoceti.** The odontocetes form one of the three suborders of cetaceans. They are characterized by a single blowhole and the presence of teeth (sometimes imbedded in the gums and not functional). Odontocetes, which feed primarily on fish and squid, vary greatly in size. The smaller species are less than 10 feet long and weigh less than 500 pounds; the largest, the sperm whale *(Physeter catodon),* reaches a length of 70 feet and a weight of 70 tons. (From Greek *odon,* tooth + Latin *cetus,* whale.)

**Orcinus orca.** *O. orca,* the killer whale, is found the world over in tropical, temperate, and polar waters. It is a strikingly marked animal, black with white underparts. There is a white spot on the side of the head, just above and behind the eye, and a light-colored, saddle-shaped patch on the back just behind the dorsal fin. The dorsal fin is sharply triangular and in adult males very high. Killer whales sometimes attain a length of 30 feet. They are the only cetacean that preys on warm-blooded animals but are nevertheless believed to feed primarily on fishes. Contrary to popular opinion they have never been known to prey on human beings.

**Otariidae.** The otariids, one of the families of pinnipeds, are the seals with external ears (the sea lions and fur seals). They have hind flippers which can be turned forward, enabling them to move on land at a comparatively rapid pace, and large fore flippers, which are their chief means of propulsion in water.

**Phocidae.** The phocids, another of the families of pinnipeds, are the hairy or so-called true seals that have no external ears. They are unable to turn their hind flippers forward for propulsion on land and thus can only inch along. They have smaller fore flippers than the eared seals and propel themselves in water chiefly with their hind flippers.

**Phocoena phocoena.** *P. phocoena* is the harbor porpoise, a small, chunky, beakless species attaining a length of 6 feet and a weight of 160 pounds. Its color is gray to nearly black on the back, fading to light gray or white on the underside. It is found in the coastal waters of the temperate North Atlantic and Pacific oceans.

**Phocoenoides dalli.** *P. dalli* or Dall's porpoise is also a small, chunky, beakless species. It attains a length of 6 to 7 feet and weighs up to 275 pounds. In color it is black with a large, sharply contrasting white region extending from the midline of the belly high up on the side. The dorsal fin is triangular, comparatively low, and usually has a light-colored posterior margin. A very rapid swimmer, Dall's porpoise is perhaps the fatest of the small cetaceans. It is found in the North Pacific as far south as the latitude of Baja California.

**Physeter catodon.** *P. catodon,* the sperm whale, received its English name from the waxy substance called "spermaceti" which is found in the oil of its massive melon. A hypothesis first proposed by F. G. Wood is that this fluid is a component of a complex echolocation apparatus. The sperm whale is the largest odontocete, attaining a length of 70 feet and a weight of 70 tons. It is found in all oceans lying outside the polar ice fields.

**Pinnipedia.** The order Pinnipedia comprises the seals, sea lions, and walrus, marine mammals with fore and hind limbs modified to form flippers. (From Latin *pinna,* feather + *pes,* foot.)

**Pseudorca crassidens.** *P. crassidens,* the false killer whale, is found in all temperate and tropical seas. It is entirely black and has a body with a shape vaguely resembling a killer whale's.

**Sirenia.** The order Sirenia comprises the relatively rare and unpublicized sea cows, manatees, and dugong. These marine mammals are vegetarians related to the elephant. The first two inhabit river tributaries and brackish waters; the dugong primarily inhabits shallow marine waters.

**Stenella graffmani.** The Pacific spotted dolphin, abundant in tropical American waters, is found from Baja California to Colombia, South America. It reaches a length of at least 8 feet. In color it is uniformly gray with small, scattered spots of white or light gray. *S. graffmani* is usually slim and has a long beak. The Hawaiian variety is called the "spinner dolphin" because of its unique habit of leaping and spinning in the air.

**Steno bredanensis.** *S. bredanensis,* the rough-toothed dolphin, is slim, with a pointed beak not sharply demarcated from the forehead. It attains a length of 8 feet. The back and sides are purplish black, and the sides have yellowish white spots. The undersurface and beak are white, tinged with purple and rose. This species is found in both the Atlantic and Pacific oceans, but rarely in the eastern Pacific. Its teeth are distinctively roughened or furrowed on the crown, with fine vertical ridges, instead of being smooth as those of other dolphins. *S. bredanensis* has also been called *S. rostratus.*

**Tursiops gilli.** *T. gilli* is a species of bottlenosed dolphin found only in the waters of the eastern North Pacific, principally in those off Baja California. It closely resembles *T. truncatus,* of which it is sometimes considered a subspecies. The taxonomy of the various populations of bottlenosed dolphins in the Pacific has not been completely settled.

**Tursiops truncatus.** The Atlantic bottlenosed dolphin, *T. truncatus,* is widely distributed in the Atlantic Ocean and the Mediterranean and Black seas. It is gray in color and attains a length of 11 to 12 feet. This species, the best known of the cetaceans, has been displayed in oceanariums throughout the world continually since 1938. It frequently ventures into bays, harbors, and other semipolluted waters without apparent ill effects. NUC has chosen *T. truncatus* as a primary subject for scientific studies.

**Zalophus californianus.** The California sea lion is found between Vancouver Island, British Columbia, and the Tres Marias Islands of Mexico. Males reach a length of 7 to 8 feet and weigh 500 or more pounds; females reach 6 feet and 200 or more pounds. *Z. californianus* eats squid, octopus, and a variety of fish. It is this species that one sees performing in circus acts throughout the world. Trainers state a preference for males, which are less high-strung and more dependable than females. Females also lose their appetite and will not work during a certain phase of their breeding cycle.

## APPENDIX 2.1. TAXONOMY QUIZ

QUESTIONS*

1. An order of marine mammals that are all vegetarians. _____

2. The common harbor porpoise, small, chunky and beakless. It reaches a length of 6 feet and a weight of 160 pounds. _____

3. A marine mammal sometimes called the "blackfish" because its color is entirely black or brownish gray. _____

4. The spotted dolphin, reaching a length of 8 feet and having a uniformly gray color with small spots of white or light gray. The Hawaiian species exhibits a "spinning" behavior. _____

5. A family of the Pinnipedia that contains the elephant seals along with all other "true seals" having no external ears. _____

6. The family of seals that have external ears and hind flippers that turn forward. _____

7. The member of the order Carnivora that is related to the weasels and is a marine mammal. _____

8. The order of mammals that includes the eared seals, noneared seals, fur seals, and walrus. _____

9. The suborder of the Cetacea that is extinct. _____

10. The odontocete that is a close relative of the beluga (white whale), males usually having a single spiraled tusk. _____

11. The species of marine mammal which is found principally off the coast of Baja California and which closely resembles an Atlantic species of the same genus. _____

*Answer choices are given on the page following the questions. The correct answers are given in Appendix 2.2.

12. The dolphin that has been depicted in art for thousands of years; the common dolphin. _____

13. The only cetacean that habitually preys upon warm-blooded animals. _____

14. The suborder of the Cetacea that includes all toothed whales. _____

15. One species of four in the family Platanistidae of which all inhabit fresh water. _____

16. The rough-toothed dolphin. It is purplish black on the back and sides, with yellowish white spots on the sides; the undersurface and beak are white, tinged with purple and rose. _____

17. The family of pinnipeds entirely restricted to Arctic waters. _____

18. The small, chunky, beakless porpoise with a low, triangular dorsal fin; thought to be the fastest-swimming small cetacean. _____

19. The Pacific striped or white-sided dolphin. _____

20. The suborder of the Cetacea that contains the largest animal in the world. _____

21. The family of odontocetes that contains more than half of all recognized species of cetaceans (including the bottlenosed dolphin, pilot whale, and killer whale). _____

22. The order of mammals that includes all whales. _____

23. A diagram showing the evolutionary relationships of animals or plants. _____

## ANSWER CHOICES

a. Sirenia

b. Pinnipedia

c. Cetacea

d. Mysticeti

e. Odontoceti

f. Archaeoceti

g. Delphinidae

h. Narwhal

i. *Inia geoffrensis*

j. *Tursiops truncatus*

k. *Tursiops gilli*

l. Penguins

m. *Globicephala*

n. *Orcinus orca*

o. *Delphinus delphis*

p. *Phocoena phocoena*

q. Dall's porpoise

r. *Lagenorhynchus obliquidens*

s. *Stenella graffmani*

t. *Steno bredanensis*

u. Otariidae

v. Odobenidae

w. Phocidae

x. *Enhydra lutris*

y. Phylogenetic tree

z. Polar bears

zz. Sea snakes

## APPENDIX 2.2. TAXONOMY QUIZ ANSWERS

| | | | | | |
|---|---|---|---|---|---|
| 1. | a | Sirenia | 13. | n | *Orcinus orca* |
| 2. | p | *Phocoena phocoena* | 14. | e | Odontoceti |
| 3. | m | *Globicephala* | 15. | i | *Inia geoffrensis* |
| 4. | s | *Stenella graffmani* | 16. | t | *Steno bredanensis* |
| 5. | w | Phocidae | 17. | v | Odobenidae |
| 6. | u | Otariidae | 18. | q | Dall's propoise |
| 7. | x | *Enhydra lutris* | 19. | r | *Lagenorhynchus obliquidens* |
| 8. | b | Pinnipedia | 20. | d | Mysticeti |
| 9. | f | Archaeoceti | 21. | g | Delphinidae |
| 10. | h | Narwhal | 22. | c | Cetacea |
| 11. | k | *Tursiops gilli* | 23. | y | Phylogenetic tree |
| 12. | o | *Delphinus delphis* | | | |

# 3. BEHAVIOR OF CETACEANS

by C. A. Bowers

Cetaceans are sensitive and intelligent animals. They have good vision, hearing which surpasses man's in water, and a highly developed echolocating ability. Scientists who have studied their behavior and abilities recognize a number of potential uses for captive, trained and perhaps even wild, free-swimming cetaceans. More than five years ago the Navy began its own cetacean research program with the object of learning more about these remarkable animals. The results promise to be beneficial in many ways.

Scientific observation of the behavior of cetaceans is best made when they are in their natural environment. It is very difficult to approximate this environment, and the behavior of these animals even in the largest oceanariums is often quite different from their behavior in the wild. Much valuable information has nevertheless been gathered by studying captive specimens, and insights have been gained into social structure, feeding habits, and other behavioral patterns. Study of captive cetaceans has also helped to stimulate interest in and questions about wild behavior.

Observation of cetaceans at sea has been a favorite pastime of seafarers for centuries. Scientific observation, of more recent origin, is made from ships specially equipped to enable trained personnel to gather accurate data. NUC uses a 50-foot catamaran, *Sea See,* with a glass observation sphere mounted at the midsection of the craft on a steel tube 30 inches in diameter. By means of a power winch the sphere can be lowered 10 feet below the surface of the water, offering 360-degree viewing of the undersea environment. *Sea See* travels at a maximum speed of 8 knots when the sphere is up and 4 knots when it is down. The vessel is based at San Diego, where it is used together with the motor sailboat *Saluda* and other craft to collect data off the coast of southern California on the diving, swimming, migrating, and feeding habits of cetaceans.

This chapter presents a condensed survey of the behavior of cetaceans both in captivity and in the wild. It begins with a sketch of training procedures and their effectiveness with captive cetaceans. It then offers a catalogue of behaviors observed in various kinds of situations or under various stimuli in both captive and wild species. At the conclusion a few of the applications of cetacean research and some of the tasks which these animals might be trained to perform for man are suggested.

## TRAINING

### Terminology

Naive Animal. A naive animal is a wild animal that has not gone through basic adaptation.

Adaptation. Adaptation is the process by which animals become accustomed to each change in environment or each new training situation.

Basic Adaptation. Basic adaptation is the process by which animals first become accustomed to their captive environment and begin eating dead or prepared food.

Complete Adaptation. An animal is considered completely adapted when he performs correctly and with high reliability all the behaviors required of him.

Negative Reinforcement. Negative reinforcement is a technique in which various forms of punishment or intimidation are used to evoke and control responses. It is used mainly in the training of large cats and to a lesser extent other land animals.

Time-Out Breaks. A time-out break is the withholding of reward or other stimulus for a prescribed time interval. The employment of time-out breaks has proven to be more effective in training cetaceans than has punishment or intimidation. The latter appear to relieve the frustration or anger of the trainer but often have detrimental effects on an animal's performance.

Bridging Stimulus. Any stimulus, but usually a sound, that can be presented simultaneously with the primary reinforcer, food, becomes a secondary reinforcer or bridging stimulus. Once an animal learns the meaning of this stimulus the presentation of the primary reinforcer can be delayed without detriment to his performance.

Procedures

Most species of dolphins and whales captured to date adapt rather well to captivity and can be trained to perform a wide variety of behaviors. Nobody knows when the first dolphin may have been captured. Some passages in Aristotle's writings suggest that dolphins may have been held in captivity in ancient times. In the United States the first captive specimen appears to have been exhibited over fifty years ago, in 1914, at the New York Aquarium. Since then oceanariums throughout the country have captured and trained these animals for public display. Marineland of the Pacific captured and trained the first pilot whale in 1957.

When a wild dolphin or whale is captured and confined in a concrete, wooden, or plastic tank, or in a lagoon or ocean pen, he must be given time to adapt or get used to his new environment. Different periods of time may be required for adaptation to different kinds of enclosures.

Experience has shown that proper conditioning, including many hours spent by the trainer in the water with an animal, especially a dolphin, makes handling, catching, and transporting a much easier task. Understanding the animal's habits, abilities, and limitations also gives a good foundation for handling and training. Training dolphins and other cetaceans to perform reliably a number of different behaviors may take some time. This time can be shortened considerably by using a proven and well understood training technique.

One of the main concerns of the trainer should be to keep his relationship with an animal as untraumatic as possible. The animal must receive the proper conditioning and reinforcement for the behaviors he is required to perform. Reinforcements can be positive or negative. If one throws a net into a pool, catches an animal, and does not feed him, for instance, it is a negative reinforcement. If one trains an animal to swim through a gate by forcing him with a net and does not feed him, it is also a negative reinforcement. On the other hand, if one feeds the animal after he has performed the required behavior, then the food offered becomes a positive reinforcement which induces him to repeat the behavior willingly. The net soon becomes unnecessary.

Many animals are conditioned by the use of punishment. Punishment, however, has many adverse effects when used on the dolphin and the whale. How does one build up an animal's confidence by the use of punishment? How does one overcome his fear of a new and strange environment? One must remember that to avoid punishment a cetacean need only swim away. Ideally the animal should view man as a friend, companion, and provider.

When requiring of an animal a task consisting of a number of steps, one should integrate the steps rapidly. A dolphin being trained to press a paddle in response to a specific stimulus, for example, should be given only a limited amount of independent paddle pressing experience before being taught to respond to the stimulus. The required behavior will come much sooner if all the steps are introduced early, for once any behavior is firmly implanted it becomes very difficult to change or modify.

The first thing that must be accomplished with a captive animal is to get him to eat dead food. One might think this an easy task, and sometimes it is; but more often than not it takes from three to seven days. The reason is that the animal is not only frightened, nervous, and unaccustomed to his new surroundings but is also being asked to eat food that is foreign to him. He is used to hunting and catching his own food. A piece of dead smelt, squid, or mackerel may not be to his liking, and he may have to be given a lot of encouragement to eat it. The best procedure is to offer him food by throwing it as near as possible to his snout whenever he comes to the surface of the water. If an animal is extremely reluctant to eat, it may be necessary to put him with another animal who is already eating or to force-feed him.

After he has started to eat, an animal should be allowed two or three days to become fully accustomed to his new diet. When he is reliably eating all that is offered him, he can be taught to come to the trainer for food. By throwing the food closer and closer to his own position each time he offers it the trainer can gradually induce the animal to approach him. Just before the animal takes the food a bridging stimulus, such as a whistle or other sound, should be presented. It is very important always to present this stimulus at the instant the animal responds in the prescribed manner. If it is not presented at the right time the stimulus may help condition an unwanted behavior. When the animal has learned to come within reach he can be taught to take food from the trainer's hand. To overcome his last bit of reluctance one may have to slide the food toward him.

Once the animal has learned to eat from the trainer's hand and knows he must perceive the bridging stimulus before he receives his food, the trainer can teach him to station or hold position by withholding the stimulus. This procedure can be repeated with a gradually increased time lapse until the animal remains stationary in front of the trainer for a minute or more.

The animal should next be taught to put his head out of the water so that he does not have to look at the trainer through its distorting surface and so that he can approach the trainer still more closely. With his head out of the water the animal will also be much easier to feed. This behavior is easily taught by offering a fish and slowly retracting it from the water. It is better, however, to teach the animal first to touch the trainer's hand. Taking a fish in one hand the trainer puts both hands in the water, slowly moving the free hand toward the fish, then beyond it, so that the animal has to touch the free hand before being fed. (The animal can be taught to touch a variety of other objects in the same way.) After this behavior has been learned the trainer can proceed to teach the animal to put his head out of the water by offering and withdrawing the fish as previously described, at the same time continuing to require the animal to touch his hand before receiving the fish. This procedure is preferable because it enables the trainer to begin the very important process of chaining behaviors. The object of all the animal's training is to teach him to perform specific tasks requiring a number of different chained behaviors.

Once an animal has learned to tolerate the touch of a hand, the trainer can concentrate on hand taming him. It is important that an animal allow himself to be patted, rubbed, and turned over on his back, among other things. Hand taming will not come easily. It is the teaching of this behavior which will require the trainer to spend a good deal of time in the water with the animal.

One of the earlier and more difficult behaviors that most animals are trained to perform is that of swimming through a gate. Certain obstacles and conditions, such as narrow openings, overhanging structures, and turbid water, can complicate the teaching of this behavior, and whenever possible they should be avoided or eliminated. To shorten the time required the trainer should use a "crowding net" as well as a sound cue (recall pinger). Animals can be trained to swim through gates without a crowding net, but it takes a good deal longer. Food reinforcement coupled with the use of a net has proved to be very effective, and an animal soon learns that the only way to avoid the net and obtain the food is to swim through the gate. If the animal is required to touch a recall pinger after swimming through the gate, the pinger soon becomes the only cue necessary, and the use of the net can be eliminated.

## FEEDING

Cetaceans in captivity are usually fed Pacific mackerel, bonito, jack mackerel, blue runner, butter fish, herring, squid, round smelt, and silver smelt. The kind of fish used depends on the kinds available and on the species of cetacean. Some whales for instance usually eat larger amounts of squid, whereas dolphins usually eat mackerel and smelt. Most animals, however, can be trained to eat any of the fish mentioned.

It may be necessary to cut some fish into smaller pieces for feeding. If this necessity is likely to arise, either because the available fish is larger than the animal normally eats or because one does not wish to fill him too quickly while rewarding him during a training session, then one must prepare for it in advance. Cetaceans do not eat cut fish in the wild and must be conditioned to accept it before they will eat it in captivity. The best procedure is to begin by feeding them whole fish with a few small vertical cuts made in each side; then gradually to increase the number and depth of cuts; then to cut off the tail, cut the fish in half, and so forth.

A thirty- to sixty-day food supply should be kept on hand in the event the supplier runs short or a normal shipment is delayed. All food should be of good quality; it should be completely thawed before use and not mushy or badly freezer-burned. An animal should be given food one would not be afraid to eat oneself. The food preparation area, buckets, sinks, and the food itself must always be kept in the most sanitary condition possible. Fish that has been thawed must not be refrozen or stored in a thawed condition overnight.

The normal daily food intake of a cetacean will depend on his size, the temperature of the water, and his metabolism. An individual animal's food intake may range from ten to twenty-five pounds per day for a dolphin to hundreds of pounds for a large toothed whale.

## TYPICAL BEHAVIOR

### Normal Behavior

**Blowing.** Blowing is the normal periodic exhalation of breath.

**Bowing.** The act of jumping completely out of the water and reentering head first is called "bowing." This is a natural behavior and is often observed in the wild. Some trained animals make bows of twenty feet or more.

**Breeching.** Breeching occurs when an animal emerges from the water with a partial roll and lands on his side as he reenters. It is observed in most captive and wild cetaceans, often when the animals appear to be playing.

**Emitting Air Underwater.** This behavior is observed in several variations and for differing reasons.

1. Some animals have been observed blowing bubbles near the bottom of a tank, then following them to the surface, biting them as they rise. This appears to be a method of amusement in captivity.
2. Animals are seen exhausting fair amounts of air underwater or near the surface during periods of frustration or anger.
3. Cetaceans are observed to exhaust air underwater to reduce buoyancy for stationing themselves below the surface or for shallow dives.

**Flipper Slapping.** Cetaceans slap the surface of the water with their flippers as well as their head and their tail. The larger delphinids, such as the killer whale (*Orcinus orca*), often exhibit this behavior when men are not present or nearby; some authorities thus believe it may be a form of social behavior. The flipper slap has usually been observed in animals that have been in captivity for a period of time.

**Flipping.** Forward and back flips have been observed in several species of cetacean. This behavior is similar to bowing; but as the animal clears the water he flips his tail stock, causing his body to turn end over end in midair. Sometimes an animal may do a complete flip, but more often a half flip is observed.

**Head Slapping.** This behavior is described as raising the head out of the water and slapping it on the surface.

**Jaw Snapping.** The opening of the jaw followed by a rapid closing which produces a moderately loud "pop" is a jaw snap. It may be used by an older male to exhibit dominance over a younger male in his pod or over males of another species present. If directed toward the trainer it may be caused by stress or frustration, depending on preceding events. Normally a cetacean will not bite with the same force with which he snaps his jaw, but he may try to nip the trainer if a stressful or frustrating situation does not change. The mere slow opening and closing of the jaw is not aggressive and is seen especially in mating.

**Lobtailing.** Here the animal makes a slow roll and slaps his flukes on the surface of the water as he submerges. Cetaceans lobtail while swimming both on their back and their belly. This behavior usually occurs because of frustration or anger. Trained animals may do it to attract the trainer's attention in an attempt to get a reward. Lobtailing may also be used by animals to warn or alert each other.

**Peculiar Posturing and Shivering.** This behavior is exhibited by captive killer whales at NUC Hawaii and has yet to be fully understood. So far it has been observed only in males; thus it may be sex oriented, possibly arising during rutting season. Similar behavior has been observed in male pilot whales (*Globicephala scammoni*) and dolphins (*Tursiops truncatus*), where however it appears to be caused by confinement and stress.

**Porpoising.** Porpoising is the normal breathing roll of the dolphin. This term is also used to describe the act of following a boat or riding the bow pressure wave.

**Posturing.** Posturing is the contorting or arching of the body that an animal exhibits before copulating or during play.

**Pressure Wave Riding.** Cetaceans ride the pressure waves of almost all kinds of vessels, from outboard motorboats to aircraft carriers. This behavior makes them easier to capture. (On a single day, under ideal conditions, a crew of two experienced collectors can capture several animals.) One cetacean also may often be observed riding the pressure wave created by another. Ordinarily the smaller of the two is the hitchhiker.

**Pushing and Carrying Objects.** Cetaceans have been observed to push almost anything with their snout. In the open sea they have been seen trailing seaweed from their dorsal fin, flippers, or flukes; in captivity they substitute towels, paper cups, and other objects for seaweed. Sometimes cetaceans have been observed pushing their dead young with their head. At Marineland of the Pacific a mother bottlenosed dolphin (*T. truncatus*) adopted a shark on the removal of her dead baby, which she had been pushing with her head. The dolphin eventually and inadvertently killed the shark by pushing it too much.

**Snorting.** Snorts are moderately loud, forceful exhalations that may be caused by frustration. Snorting may also represent an effort to clear the blowhole, similar to a man's voluntary cough.

**Social Interaction.** Six years ago at Marineland of the Pacific an adult male pilot whale (*G. scammoni*) named Bimbo exhibited a dramatic response to the death of a female tank mate. The morning following the death he was discovered towing the body around his tank. It took four hours of work, including draining the tank, to separate him from the dead whale. This incident, which is presented here in simplified form, can be found fully described by D. Valentry in *Sea Frontiers,* vol. 15 (July-August 1969), p. 219. Many other accounts of cetaceans assisting their fellows can be found in the literature.

**Spinning.** Spinning is the rapid rotation of an animal's body while he is swimming through the water or while he is porpoising or bowing. This behavior is commonest in the Hawaiian spinner dolphin (genus *Stenella*).

**Tail Walking.** This behavior is an exaggeration of the act of raising the head out of the water. Instead of only his head the animal raises almost his entire body into a vertical position above the water's surface and "walks" forward or backward with the aid of his flukes.

**Vocalization.** Cetaceans produce a variety of sounds, both in and out of the water. These sounds are used for echolocation and perhaps also for communication. Both naive and trained animals emit what are believed to be distress signals when they are frightened or in danger. Killer whales and other species have been observed to mimic sounds they hear, such as the squeak of a winch used to lift them or a command.

Fear-Arousing Situations

**Capture.** Capture is stressful regardless of the method used, and cetaceans should be caught with as little harassment as possible.

**Concentrated Light.** During the day, direct bright light does not seem to bother cetaceans, but at night light often startles them.

**Crowding Net.** Newly captured animals are particularly frightened by nets. If properly exploited this fear can be an asset during gate training; improperly exploited it will lose its effectiveness, and the trainer will have lost a valuable tool.

**Gates.** A good deal of training is required to get a naive animal to swim through gates or small openings. Once animals are trained, however, they will swim through surprisingly small openings. Trained animals often try to unlatch gates and force them open.

**Harassment.** Cetaceans can be harassed by almost any annoying occurrence, such as an explosion, the slap of a towel, or poking with a pole.

**Loud Noise.** A loud noise made near the head of a cetacean will startle him. This reaction is particularly evident with animals that are out of the water. Cetaceans nevertheless seem able to adapt to loud noise after a certain amount of exposure.

**Needless Handling.** When an animal is out of the water it is best not to handle him any more than is necessary to restrain, support, and care for him.

**Overhead Obstructions.** Cetaceans do not like to swim under walkways or other structures which hang over the water. This fear can be overcome by proper training.

**Several People in a Confined Animal Enclosure.** Too many people in the water with an animal, especially if they are moving about, will arouse fear. If it is necessary for a number of people to be in the water they should enter slowly and keep their movements to a minimum. All should be experienced trainers or handlers.

**Shallow Water.** Certain species, such as the bottlenosed dolphin, naturally enter shallow water on occasion; other species must be conditioned to enter shallow water. In general, cetaceans will be more active and more easily trained if the water is as deep as they are long.

**Tank Cleaning.** Before putting an animal into a chemically cleaned tank one must be certain that all the chemicals have been completely rinsed away. The noises and water jets of pumps used to clean tanks are also stressful, and these pumps should not be used when animals are present.

### Fear Reactions

**Distress Whistle.** When animals are captured and restrained they usually emit a characteristic, high-pitched whistling or squealing sound. During transportation they also emit this sound, especially during the noise of aircraft take-offs and the movements of landings and sharp turns.

**Flight.** Flight may be the result of negative reinforcement or any other fearful situation. During open-ocean training flight can result in the loss of an animal.

**Rapid Swimming in the Tank.** Rapid swimming occurs especially when many people are in the water with a cetacean or when someone lunges at him.

**Snorting.** The loud, forceful exhalations mentioned previously may also be a fear reaction.

### Aggressive Behavior

**Biting.** Cetaceans rarely exhibit the vicious, aggressive biting characteristic of sharks, barracudas, and morays. Their bite is generally a quick nip or a quick sweep of the open mouth brought on by rough handling, continual netting and capture, medication, injection, drawing blood, and so forth; it occurs more often in so-called "tame" than in wild animals. The way to avoid biting is to handle an animal as gently as possible, rewarding him for performing or submitting to all required procedures. When it is necessary to capture an animal,

whether by net or hoop or with the hands, one should be sure he does not get free; if he does he will only be encouraged to become more aggressive on the next attempt to capture him.

**Butting.** During play, pilot whales often butt with their head against walls, floats, other animals, swimmers, and so forth. Dolphins butt with their snout in an aggressive manner when provoked or harassed.

**Emitting Air Underwater.** This is accomplished by releasing large amounts of air underwater or near the surface during periods of frustration or anger.

**Head Wagging Underwater.** This rapid, side-to-side shaking of the head by an animal positioned horizontally underwater may be coupled with almost any other aggressive behavior.

**Jaw Snapping.** This behavior is the previously mentioned opening and closing of the jaw with a popping sound.

**Specific Vocalization.** Trained animals seem to have a specific squeal or chirp that denotes anger and can be recognized as such.

**Tail Kick.** Cetaceans sometimes use their talk stock to strike people attempting to capture or otherwise provoking them; they may also use their entire body to strike a provoking man or animal. Trainers have occasionally suffered bruised or cracked ribs from aggressiveness of this kind.

## Echolocation

Echolocation is the ability to locate objects acoustically by producing sounds and interpreting their echoes. Many species of cetacean have an echolocation ability, but the species whose ability has been most thoroughly studied is the bottlenosed dolphin (*T. truncatus*).

Cetaceans use echolocation for navigational and other purposes, including the investigation of objects falling into or otherwise entering the water in their vicinity. For short-range echolocation it is believed that dolphins produce a series of clicks that are very close together and sound like a variable-pitch buzz; for detecting and locating distant objects they generally produce a series of clicks spaced so that each is individually audible.

Two behaviors particularly associated with echolocation are orientation, the pointing of the animal in the direction of the object to be detected, as a bird dog points toward its prey; and scanning, the movement of the animal's head from side to side, and occasionally up and down, as he ranges toward an object. The sound emission sites for echolocation are the melon, the portion of the head which lies between the blowhole and the snout or rostrum, and the tip of the upper jaw; the sound production sites are within the head in the region of the blowhole.

## POTENTIAL APPLICATIONS OF CETACEAN RESEARCH

University, private, and naval research laboratories are continuing the investigation of cetacean physiology and abilities, behavior and habits. Research studies of diving physiology, hydrodynamics, and echolocation may produce information that will lead to the improvement of present Navy diving devices, hull designs, and sonars. Private concerns may eventually train animals to carry tools to divers and to herd or locate fish. Oceanariums, however, will probably continue to be the largest commercial users of cetaceans.

The conditioned reinforcement technique is used to link behaviors for a task and is the primary method of training. As many as twenty behaviors or more may be chained together in the performance of a task. It is believed by some that through such means we will eventually be able to control behaviors of many species of cetaceans in their own environment, the open sea.

# 4. BEHAVIOR OF SEA LIONS

by D. I. McSheehy

This chapter presents a survey of the behavior of sea lions. Its intention is similar to that of the foregoing chapter, and despite differences in the order of presentation many of the topics covered are the same. The chapter begins with a catalog of natural behaviors and follows with a discussion of trainability and learned behaviors. A discussion of the sea lion's potential forms the conclusion.

## NATURAL BEHAVIOR

### Ordinary Behavior

The following behaviors were observed in newly captured sea lions and trained animals that had been in captivity for a substantial period of time.

Barking. The sea lion has several vocalizations, most of them similar to those of a barking dog. Some animals seldom bark, but others continually make some kind of noise.

A person unable to see a barking sea lion may believe he is hearing several, for a barking animal uses several different tones. The sea lion's bark also varies with certain kinds of stimuli. When chased or fleeing from some aversion he emits a characteristic high-pitched "yip." An equally characteristic low bark or growl signifies anger and that the animal will probably make a stand and bite if circumstances do not change. It is thus important for a trainer to recognize and respond appropriately to a sea lion's vocalizations.

Fighting. Sea lions are quarrelsome by nature and constantly scrap among themselves; this characteristic behavior is readily observed both in the water and on land.

Biting. The fighting of sea lions is accompanied by a good deal of biting, particularly about the mouth and neck, where wounds and scars are frequently observable.

Nuzzling. Nuzzling is a friendly action in which two or more sea lions approach, rub whiskers, and sniff each other around the nose and back of the neck and head. This behavior can also be observed both in the water and on land.

Scratching. Sea lions have long conical toenails and are capable of scratching almost any part of their body. This behavior appears to be one of their favorites, and they may often be observed scratching around their ears with their hind flippers during periods of rest.

## Fear-Arousing Situations

Discussed below are several situations that will frighten or upset a sea lion even after he has adapted to captivity.

**Unfamiliar People.** It is best when training newly captured sea lions to keep strangers at a distance from the training area. A sea lion becomes uneasy when unfamiliar people are nearby and may run and hide or bite the trainer or intruder. If strangers enter during a training session, one should have them approach cautiously while continuing to feed and comfort the animal.

**Crowding.** Cornered or crowded sea lions become frightened, defensive, and dangerous; they strike out at anyone who approaches them, and large bulls have been known to go on the offensive and attack. Should an animal become frightened during a training session, it is best to back off and give him a rest.

**Sudden Move or Noise.** Any sudden move or noise while a sea lion is concentrating on learning an assigned task will usually startle him. The animal may react by striking out at the trainer or retreating to a remote corner of the training area.

**Physical Negative Action.** A physical negative action is one which deliberately inflicts pain; for instance, rapidly striking the sea lion's sensitive nose with two fingers. Negative reinforcement is necessary in the training of sea lions but should be used in moderation and at the proper time; used constantly or at the incorrect time it will frighten an animal and in the long run may break his spirit or cause him to become vicious.

## Fear Reactions

Once a sea lion has been frightened or irritated he may react in a variety of ways. Listed below are the more typical reactions observed in captive sea lions.

**Growling and Displaying Teeth.** This behavior usually occurs when one "pushes" a sea lion or presents him with a problem that he has difficulty comprehending.

**Biting.** A sea lion who is about to bite a trainer may or may not growl as a warning. Some trainers attest that an animal's eyes are an indicator that he is about to bite; they say that the eyes dilate and acquire a "mean" look. The sea lion's bite is usually quick and short like a rattlesnake's and is capable of making a bruise on the victim which is often worse than the wound inflicted by the animal's teeth.

**Hiding.** When a sea lion is frightened his natural reaction is to retreat or hide. If he is in the water he will dive and swim to the deepest part of his pool, surfacing only to breathe; if he is on land he will dive into the water and remain until the threat has passed. If no water is available an animal will go to the remotest corner of his enclosure or training area and take up a defensive stance.

The length of time a sea lion remains in hiding will depend on the provocation. If hiding resulted from the intrusion of a stranger, the animal will probably return immediately; if it was the result of a physical negative action he may not return for 10 or 15 minutes. While an animal is hiding the trainer should leave him alone and allow him to relax.

Defensive Stance. Angry sea lions take up an unyielding position from which they threaten all to stay away or suffer the consequences. If one continues to make demands on him, an angry animal may charge.

Trainers state that the only way to halt a sea lion's charge is to keep one's head and make a counter-charge. Nine times out of ten this action will cause the animal to stop and take up another defensive stance or retreat. Readers may be concerned about the one chance in ten when the sea lion does not stop. The outcome then depends on the agility of the trainer.

## LEARNED BEHAVIOR

### Trainability

Sea lions are considered one of the more complex animals to bring under control. Training a sea lion usually requires a seasoned trainer or a novice under careful guidance. In the trainer-animal relationship the trainer must play the dominant role. If a sea lion realizes that he can bully or intimidate his trainer he will usually become aggressive and perform only simpler tasks. Therefore the first objective of the trainer is to establish a dominant role; once this has been accomplished sea lions can be trained by methods similar to those used with cetaceans.

In attempting to establish dominance the trainer should retaliate against any aggressive act on the part of a sea lion. If the animal growls or snaps, for example, a slap on the tip of the nose will soon extinguish this trait. A quick, light slap with fingers extended is sufficient, for the sea lion's nose is very sensitive; a hard blow on the nose can kill an animal, and even a moderate blow will stun him.

Once the trainer has established dominance the trainability of the sea lion is exceptionally good. A sea lion will learn to perform a task after fewer trials than most animals; and once he has learned a task, he will perform it proficiently with a minimum of retraining even after a considerable lapse of time.

Along with their many assets sea lions have certain liabilities. They are easily startled and frightened, though they usually recover quickly and return to their task. They dislike a change of environment, preferring to work in a familiar place and often having to be forced to work in a new one. They are quarrelsome not only among themselves but frequently with their trainer. Though they can be conditioned to be gentle beasts, they should never be taken for granted; on rare occasions a docile animal has been known to become vicious without apparent provocation.

Sea lions are so high-strung and sensitive that voice inflections can be used as positive or negative reinforcers in their training. Harsh commands, for example, can be used to cow or subdue an aggressive animal, and soothing phrases like "Good seal!" or "That's a boy!" can be used to support and encourage a cooperative one.

The above discussion is concerned with characteristics of the typical sea lion. It must be kept in mind, however, that some animals will not accept subordination to the trainer. This obstinacy precludes the possibility of their training.

## Basic Training Procedures

The basic training of California sea lions (*Zalophus californianus*) for eventual open-ocean release comprises several interrelated steps or phases. The first, adaptation to captivity, is by far the easiest to accomplish. Hand taming, recall training, limited release, and adaptation to equipment may be accomplished in sequence or simultaneously, depending on the aggressiveness of the individual animal. The steps mentioned will be set forth in detail to provide insight into the actual methods of training sea lions and the relationship between the basic and later stages of their training.

Adaptation to Captivity. Sea lions used for Navy projects are wild when received. The first step in their training is to let them become accustomed to their new surroundings. Within a few hours some will begin to eat; those who refuse at first are coaxed with squid, one of the sea lion's favorite foods. All new animals are usually eating within a few days.

Once all of the animals are feeding they must be trained to enter their own individual quarters and stay for lengthy periods of time. After this initial training, the sea lion is fairly well adapted to his new surroundings.

Hand Taming. A pedestal is used to elevate the sea lion to a position suitable for the trainer to make a first attempt to touch him. Hand taming is accomplished in several different ways. The most common is to attract the animal's attention by holding a fish over his head with one hand and then to stroke him gently with the other. Once the animal has accepted being touched the next step is to touch him and then give him a cut of fish. This step should be repeated until he allows himself to be handled for the length of time desired before being rewarded. It should be brought out here that some seasoned trainers have taught their animals to perform extraordinary behaviors without ever touching them. We employ hand taming primarily to prepare an animal to wear a harness and muzzle but also to gentle him.

Recall Training. Recall training is instrumental in aiding an animal to return to his home base after he has been released to perform a task; after making a deep dive, for example, a sea lion may be cut off from sight of the trainer by ocean swells.

The method of recall is both auditory and visual; that is, the animal is guided into sight by an auditory recall and then brought home by a visual cue from the trainer.

The desired behavior is simple to establish. The sea lion is presented with an auditory signal and rewarded each time he touches its source; when he has learned to touch the source it is taken out of his sight, and he must listen and find it. The animal is taught to respond to the visual cue in the same way; the trainer makes a come-to-me gesture with his arm, and the animal is rewarded each time he responds correctly.

Limited Release. Limited release is to turn an animal loose in a confined area of water. This step is taken after the animal has learned to respond to the visual recall cue and will come to the trainer on command. Limited release allows sea lions an opportunity for exercise and freedom during periods when they are not being trained.

Adaptation to Equipment (Harness and Muzzle). On completion of hand taming, harness training begins. The function of the harness is twofold. First it supports a recovery float, a timed device that inflates a balloon for easy detection if the sea lion goes astray. The second function is to hold a leash used for walking the animal from one place to another.

In harness training, a ring made of hose is used to accustom an animal to having something placed over his head and around his neck. Afterwards the harness is slipped on and secured for a short period of time, then removed. This procedure is repeated until the animal has completely accepted the idea of wearing the harness.

The muzzle also has two functions, both equally important. One is to prevent the animal from feeding while diving; the second is to support a marking device.

Muzzle training is a simple but lengthy process. First the animal is rewarded for merely touching the muzzle with his nose. After fear of the new object has been overcome, the trainer puts the cup on the animal's nose for a fraction of a second and then rewards him. This process is repeated until the animal leaves the muzzle on until the trainer removes it.

It takes on the average about two and a half months to train a newly captured sea lion to the point where he wears a harness and muzzle. Some animals take as little as a month; others take three months. Once an animal has learned to wear harness and muzzle and is under partial control of the trainer, he is ready to start his initial project training.

## POTENTIAL OF SEA LIONS

The sea lion is unique in that he is agile both in and out of the water. His sense of sight and sense of smell are excellent, and he can dive to depths of at least 700 feet with no ill effects. His ability to remain out of water for long periods of time and travel comfortably in a small cage makes him an ideal animal to transport. The only requirement is that his cage be well ventilated and kept out of direct sunlight, for sea lions are susceptible to heat prostration when they are denied access to water.

The training potential of the sea lion is virtually unlimited. Sea lions have demonstrated their intelligence and reliability for years in circus acts; recently they have shown their ability to carry tools to divers and to help in locating equipment lost on the ocean floor. In the future they may be trained to aid commercial fishermen, to act as lifeguards for divers, and to gather information about parts of the ocean which are inaccessible to man. These are a few of the numerous possibilities which remain to be explored.

# 5. CAPTURE, SELECTION, AND TRANSPORT

by M. E. Conboy

When marine mammals are removed from the water or otherwise handled, certain of their physiological and behavioral characteristics must be considered to prevent injuring the animals. Therefore, it is necessary to observe a comprehensive set of safety procedures while handling or working with marine mammals. This chapter explains specific procedures for the main stages of animal handling: capture, selection, transport, and adaptation to captivity. The technological development of some of these procedures is included. However, only information is given that is relevant to marine mammals intended for training; also applicable is certain information about animals used for exhibition.

## CAPTURE METHODS

### Methods Harmful to Animals

Various methods have been used to take marine mammals for food or other commercial products. These methods are generally harmful to the animals during the capture process even before they are killed. The methods are described here to eliminate the possibility that they might be attempted with the idea that they are acceptable if the purpose is not to kill the animals.

**Herding by Noise.** In some parts of the world, porpoises and the smaller whales are herded into shallow water by fishermen beating on their small boats or submerged poles to make noise. Once in the shallow water it is easy to kill them in large numbers and collect the carcasses. However, this herding process severely frightens the animals and would make them poor candidates for training.

**Stranded Mammals.** Occasionally, animals are stranded because of natural causes. If an animal is healthy, and proper equipment and trained personnel are quickly available, it may be a subject for capture. However, for the most part the animals are stranded for adverse reasons that make them unfavorable for capture and training. Many are found dead, dying, or very sick. Porpoises usually strand themselves singly, apparently when they are sick. Whales often strand themselves in groups, possibly to avoid natural enemies such as killer whales or sharks. Other theories to account for strandings include sonar interference, navigation errors, and parasitical infestation of the central nervous system. In any case, attempts to refloat live animals usually fail, as they persist in restranding themselves.

**Harpoons and Hooks.** The first methods used to capture marine mammals for exhibit were adaptations of some commonly used by fishermen and whalers. The animals

were slightly wounded in the tail flukes or dorsal fins by harpoons penetrating and fastening there, and they were pulled back to the capture boat. A refinement of the technique was the use of a swordfish dart (figure 5.1A), a detachable spearhead, with the blade slightly curved so that the dart turns outward as it enters the animal's body to prevent a deep wound. A float and line attached to the swordfish dart retard the animal in trying to escape, and the animal is followed and retrieved after it has weakened itself.

Tailgrabbers (figure 5.1B), forked devices similar to ice tongs, were used to attach a line to the tail stock of a porpoise. The animal was then hauled tail first back to the capture vessel. This often resulted in severe injury to a struggling animal.

Fish hooks were attached to a long pole, and as the animal swam near the boat it was gaffed. The hooks are attached in such a way that the pole can be thrown at the animal or used to snag the animal (figure 5.1C) by hand. Again a line and buoy were attached to the hooks.

Drugs. Certain modern capture methods used for wild land animals were tried on porpoises but were unsuccessful. They consist of injecting drugs into the animal by means of harpoons tipped with syringes or the Palmer gun. The Palmer gun is commonly used to capture large or dangerous animals and works by a drug in a capsule being shot into the animal from an air-powered rifle (figure 5.1D). However, porpoises are very susceptible to anesthetics and tranquilizers; the breathing center of the brain is affected and the animal stops breathing. All attempts to capture marine mammals with this method have proved unsuccessful.

Electric Shock. Another method is the use of an electrical shocker. This has been used in Europe with reported success for commercial capture. However, the animals are harmed or frightened this way.

### Less Harmful Methods

Presently two methods are used to capture marine mammals in the United States. One method is used in shallow waters off Florida and the other in deep waters off California and Hawaii.

Seine Nets. In their search for food, the Atlantic bottlenosed dolphins (*Tursiops truncatus*) of the U. S. east coast frequent shallow bays, rivers and coastlines. There fishermen can encircle a pod of animals with long seines, and large numbers of animals can be captured at a single time (figure 5.2). Seine nets are 20 to 30 feet deep, and in waters shallow enough cut off any substantial water space through which the animals could escape. The net is hauled aboard the boat to reduce the free swimming area. The animals are finally entangled in the nets and brought aboard the capture boat. Caution must be taken to avoid drowning animals at this point.

The advantage of this method of capture is that a large number of animals can be captured simultaneously, usually in family groups of adults, young adults, and immature animals. Then the younger or healthier animals can be selected and the older and sick ones released.

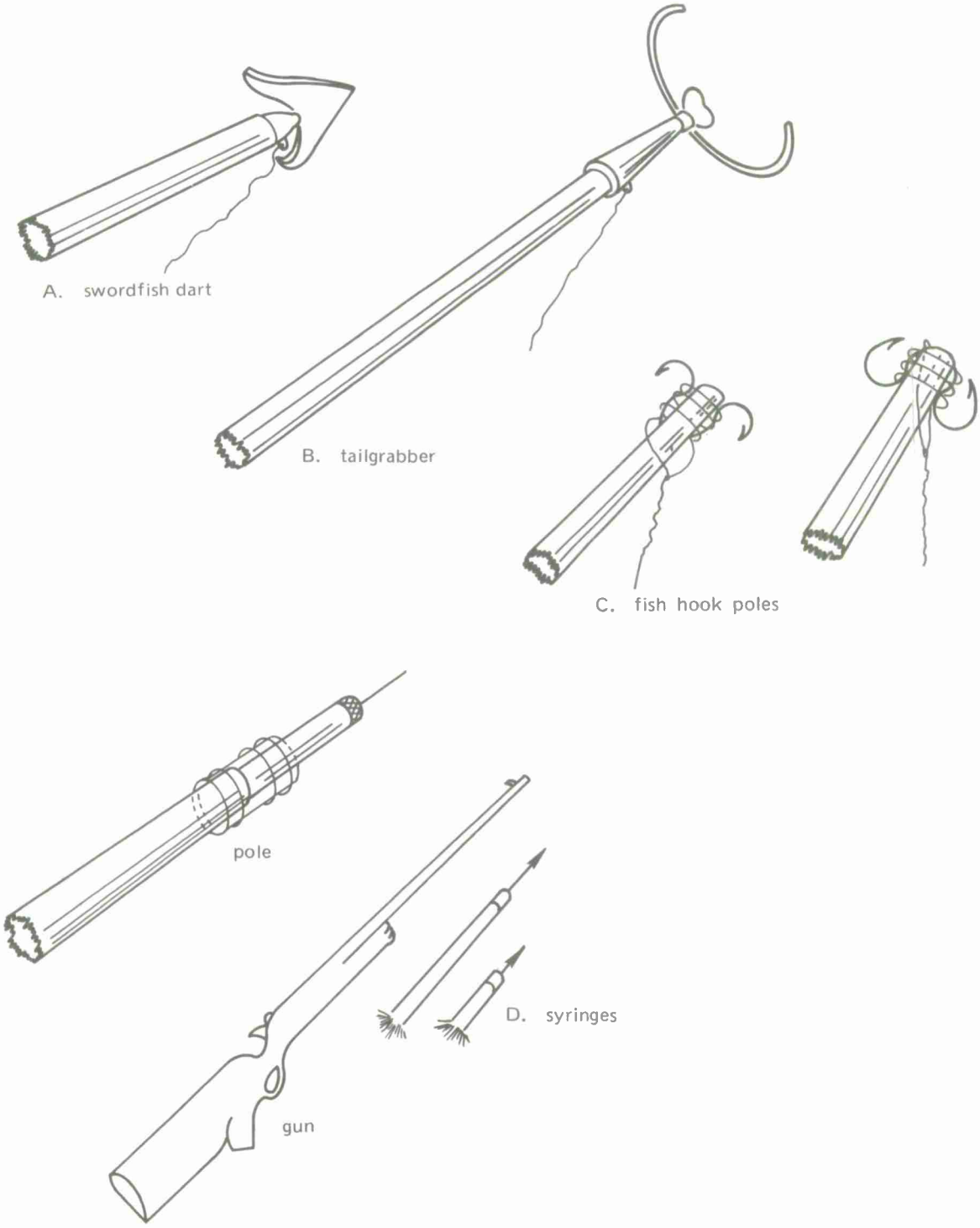


Figure 5.1. Harmful capture devices.

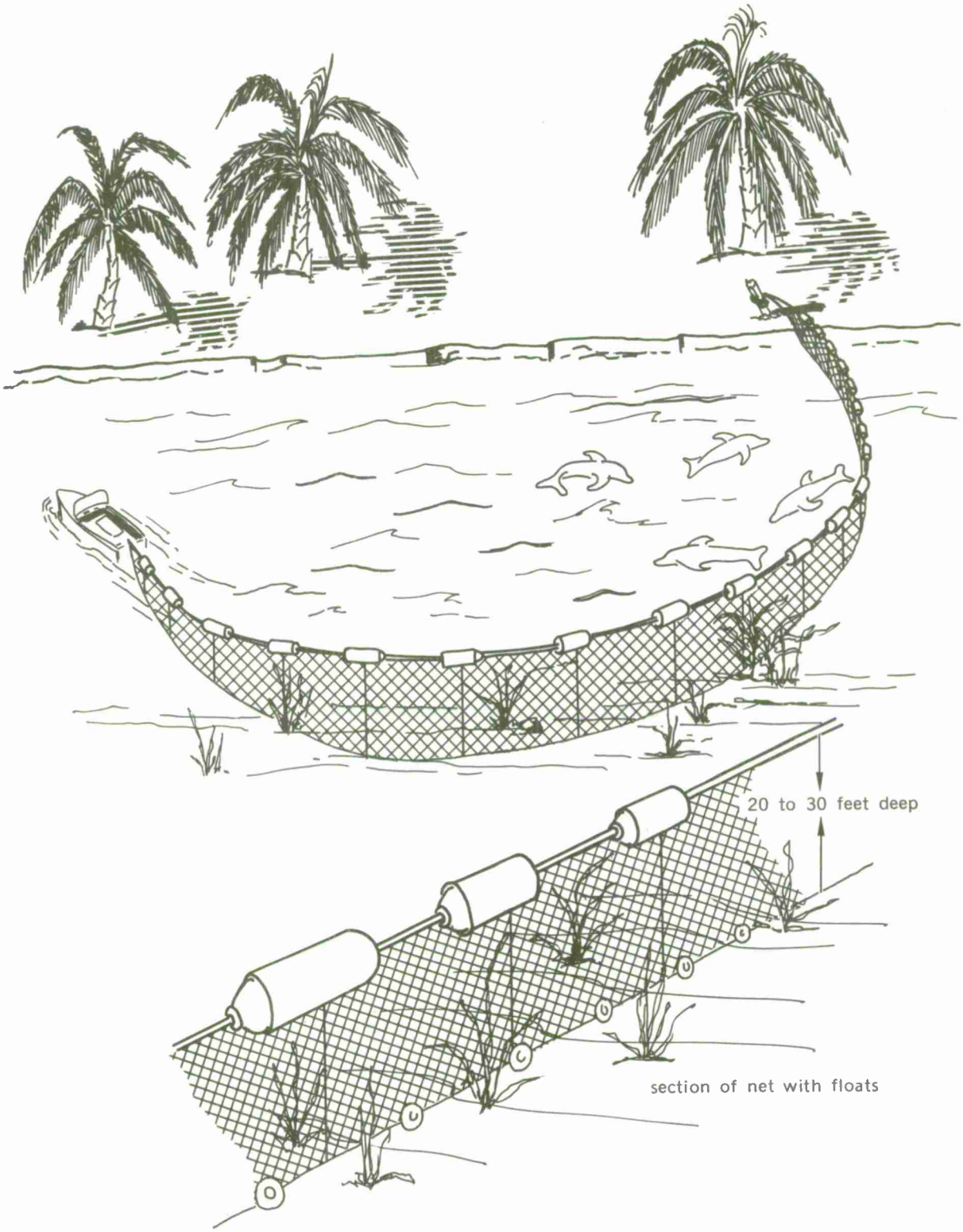


Figure 5.2. Catching porpoises with seine net.

The above method is used to capture the Atlantic bottlenosed dolphin and with slight variations the killer whale (*Orcinus orca*) and the California sea lion (*Zalophus californianus*). The variations for the killer whale and sea lion deal mostly with the deployment of the nets and the method of actually removing the animals from the enclosures.

The sea lions are allowed to entangle themselves in the larger-mesh nets, and the cork float lines are watched to determine the exact point of entanglement. The cork line at this point will sink and bob as the animal struggles underwater. Speed and alertness are required in order to prevent drownings.

In the seine net method used to catch killer whales, the enclosed areas are much larger and the whales are not allowed to become entangled in the nets. A large netted area is laid in the path of an approaching pod of whales. One side of the enclosure is left open until the animals are inside and then the opening is netted off. Inside the enclosure, the animals are divided into smaller groups by the placement of other seine nets, the objective being to separate out the young, smaller and more desirable animals from the rest of the pod. Several hours of pulling long nets are required to achieve the desired selection and separation.

Capture on Beaches. Other methods are commonly used to capture sea lions. The Pinnipedia (sea lions, seals and walruses) live for long periods of time on deserted stretches of beach, going into the sea only to feed. These animals are excellent swimmers and they have a great deal of speed and mobility in the water, but on land they are easy prey. The animals can be lassoed, netted or shot with tranquilizers, if the appropriate drugs are used.

Small seals and sea lions, less than 50 pounds or 3 feet in length, can be caught with bare hands. A colony of sea lions is approached as closely as possible without being detected. Since the animals become frightened at the approach of a tall vertical shape, the capturer should approach as closely as he can to a colony without being detected by crawling on the stomach and remaining in a horizontal position. In this way he can get into the middle of the sea lions without alarming them. At this point he selects a small animal (the big ones may be dangerous), and grabs its hind flippers; then he can stand up and drag the animal backwards. The animal cannot bite as long as it is being dragged backwards, so the capturer should not stop until assistance is available to put a net on the animal. The other animals usually run away.

Hoop Nets. To capture porpoises in waters too deep for seine nets, which are good for shallow water only, one must take advantage of their natural habit of riding the bow wave of a ship.

The capture boat is driven through a pod of animals so that the animals will ride in the bow wave generated by the ship. A man with a hoop net rides the bow, ready to net an animal. The animals use this wave much as a body surfer rides an ocean wave. According to Dr. T. G. Lang,* a pressure field is generated at the bow of a ship, which becomes weaker with distance ahead of the bow, but which can be felt as far as 1/10 of the ship's length ahead of the bow. Thus a ship 80 feet long will generate a pressure gradient reaching as far as 8 feet ahead of the bow. A porpoise with its tail in a region of higher pressure water

---

* *Naval Undersea Research and Development Center, San Diego.*

will be given some forward thrust. With a minimum of physical exertion a porpoise can keep up with a fast-moving ship. This accounts for some greatly exaggerated speeds attributed to porpoises. Observers were reporting assisted speeds and not true speed.

As the porpoise rides the bow wave he periodically "blows," i. e., comes to the surface to breathe. If the animal blows within reach of the capturer's net the animal is subject to capture. As the animal rises to the surface, the capturer, if in proper position, pulls the hoop net, which has a lasso woven into the outer edge, over the animal's nose (rostrum) and partly around its body. The net breaks away from the hoop as the animal swims through the hoop, wrapping itself in the net bag. A long line and float attached to the net are pulled overboard by the animal (figure 5.3). The capture boat keeps the float in sight until the animal can be pulled over to the boat and lifted aboard.

This method is used primarily on the west coast and in Hawaii for the Pacific bottle-nosed dolphin (*Tursiops gilli*), the common dolphin (*Delphinus*), the white-sided dolphin (*Lagenorhynchus obliquidens*), Dall's porpoise (*Phocoenoides dalli*), the spotted and long-beaked dolphins (*Stenella*), and the rough-toothed dolphin (*Steno bredanensis*). It is also used, with variations, to capture the Pacific pilot whale (*Globicephala scammoni*) and the false killer whale (*Pseudorca crassidens*). This process demands a great deal of concentration on the part of the capturer and coordination from assistants. The capturer must predict which animal in the group is going to blow next and then position the hoop net accordingly.

It should be pointed out here that the capture process is very traumatic for the newly captured marine mammal. A free-swimming animal is suddenly netted and removed from the water; then it is placed on deck whereby it experiences forces of gravity for the first time and a physical strain of breathing. Some species are more susceptible than others to a phenomenon referred to as "capture shock" and, upon being brought aboard, they almost immediately go into convulsions and die. Notable for this reaction are *Delphinus, Stenella,* and *Phocoenoides.*

The current practice of delaying the time an animal is removed from the water after the initial enmeshment in the net (i. e., allowing the animal to adjust to the loss of freedom of movement, before being brought aboard the capture boat), appears to minimize the stress on some animals and reduces the mortality rate during capture.

Physical injury is avoided when a wild animal is being captured with a hoop net, by the animal being slowly and carefully pulled back to the capture boat. Also rope pressure on the animal is reduced and cuts and rope burns are lessened if a handler swims in the water and pushes the porpoise back while the capture boat pulls the animal back with the float line.

If a capture boat's bow is so high that the hoop net cannot reach the water, a pulpit is constructed on the bow to allow the capturer to ride nearer to the water. From this position the hoop net can be used with much greater accuracy.

Pilot whales and false killer whales do not normally swim in a ship's bow wave. In order to capture these animals with a hoop net, the pulpit must be extended from the capture boat's bow at least 35 feet in order to place the capturer and hoop net within range of the animals.

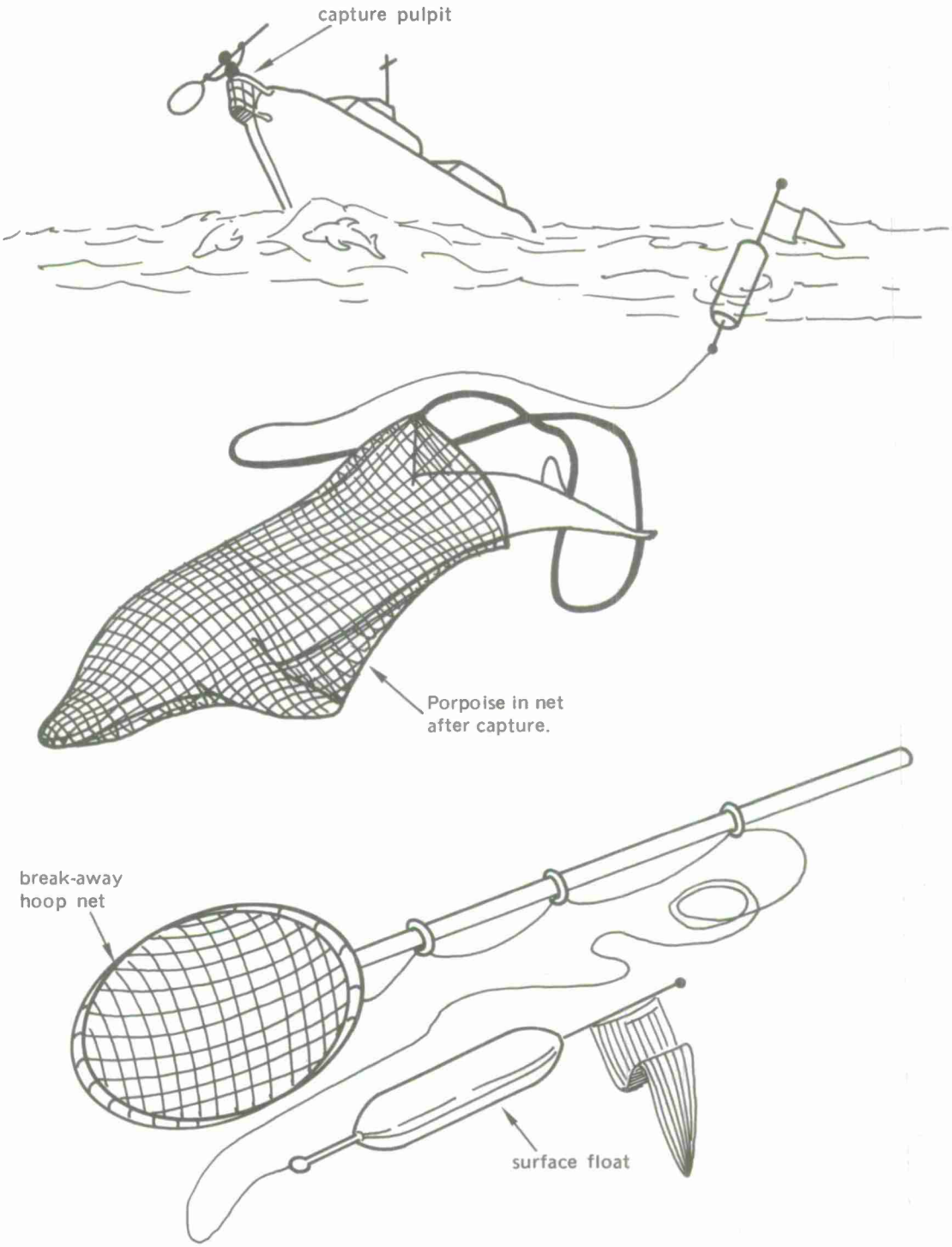


Figure 5.3. Hoop net method of capture.

Prior to any capture trip, the local and state laws should be checked for any restrictions placed on the capture of marine mammals. Usually, capture of these animals is not prohibited, but net size is sometimes prescribed. Also, capture permits may be required in some areas.

Commercial Purchase. Animals can be obtained by direct purchase from commercial fishermen. There are several sources in Florida, and a few in Hawaii, California and Washington. When dealing with an unknown vendor, care must be taken to specify the best possible animals.

The price of a Florida porpoise varies from around $100 to over $600, depending on the stringency of the selection requirements. A wild, untrained, newly captured animal can be obtained for around $100. If sex, age, adaptation to eating in captivity, or any training is specified, then the price naturally is higher.

Collectors generally do not have porpoises "in stock" or available and want a purchase contract or an order prior to capturing an animal. Commercial collectors normally have a regular fishing business as their main livelihood and cannot afford the time or money required to maintain a porpoise colony while waiting for customers. Additional delays in obtaining animals can be attributed to the unavailability of animals in a given area or bad weather that would prevent working in small boats.

## SELECTION

### Health

The state of health of a porpoise should be determined as soon as possible after capture. The importance of selecting only healthy animals for research or training cannot be overemphasized. As the length of time devoted to adapting or training an animal increases so does its worth, both monetarily and behaviorally. Sick animals should be rejected in order to avoid a long convalescent period and costly medical treatment. During this time the animals cannot be effectively worked and additional manpower is required to maintain the sick animals. Also, the repercussions of introducing a porpoise with a communicable disease into a research community are obvious.

At present it is difficult to determine the exact state of health of a porpoise without a veterinary examination complete with laboratory tests. However, an experienced person can make, while still aboard the capture boat, a fairly accurate estimate of the general health of an animal and can detect the more obvious faults. From external indications of poor health, animals can be singled out that are undesirable for research or training and they can be rejected. These are returned to the sea.

The health inspection should include a complete physical examination of the animal's skin, eyes, blowhole, urogenital openings, and mouth. The skin should be free of any infections or recent sores. The underside of the flippers and the junction of the flippers and body should be closely inspected for hidden sores. Numerous open ulcerous sores on the animal may indicate a more serious internal infection and the animal should be rejected.

The mouth of the porpoise should be opened and inspected. The mouth and throat areas of a healthy porpoise are pink. Sores on the tongue and throat may indicate internal

infection. A porpoise with mouth sores may not be able to eat enough to maintain good health.

Animals that have not been eating will soon lose weight and become thin and "bony" looking. In the advanced stages of emaciation (abnormal leanness caused by starvation) the areas on either side of the base of the dorsal fin become concave, the ribs become prominent, and the neck region is well defined.

The eyes should be examined for cataracts (a cloudy, milky appearance that would indicate blindness) or any apparent serious eye disorder.

The fecal material from a healthy porpoise is usually a dull green, thick liquid which dissipates quickly in the water. Thus it is not always observed. A bright or dark green or brown color may indicate ill health; also feces that remain formed in the water for any length of time may indicate constipation. An absence of fecal material in a stretcher after a long transport trip would indicate that the animal has not been eating and may be in poor health.

## Age

After good health, the most important criterion for selection is age. Old animals should be rejected because they are more susceptible to disease and because they are more difficult to train in contrast with younger animals.

The age of the Atlantic bottlenosed dolphin can be roughly determined by its body length. Animals under six and one half feet long are probably less than two years old. Animals from six and one half feet to seven feet are usually three to five years old. An animal over six years old would be from seven to eight feet in length. Although porpoises probably live 25 to 30 years or more, animals over eight feet in length may be over ten years in age and are considered older and sexually mature.

The texture of an animal's skin and scarring may also give an indication of age. The older animals usually have many scars as the result of fights, sex play, or injuries. The younger sexually immature animals will not be as badly scarred. The Atlantic bottlenosed dolphin is usually more scarred than other species, possibly because the animal frequents shallow bays and lagoons that are more congested with boats and trash; the other animals are pelagic and remain in cleaner, deeper water.

If the teeth are worn down to the gums, the animal is probably twenty years old or more.

## Sex

Although some people claim to be able to determine the sex of a porpoise by the curvature of the posterior edge of the dorsal fin or by certain swimming behaviors, the only positive method is by an examination of the genital region.

The female has one long slit that contains the genital aperture and anus, with two shorter slits, each concealing a teat, on either side.

The male has two slits, one ahead of the other; the anterior one is the genital slit and the other is the anus. On some animals these two slits may run together. When the anterior slit is examined, the penis is revealed (figure 5.4, bottom).

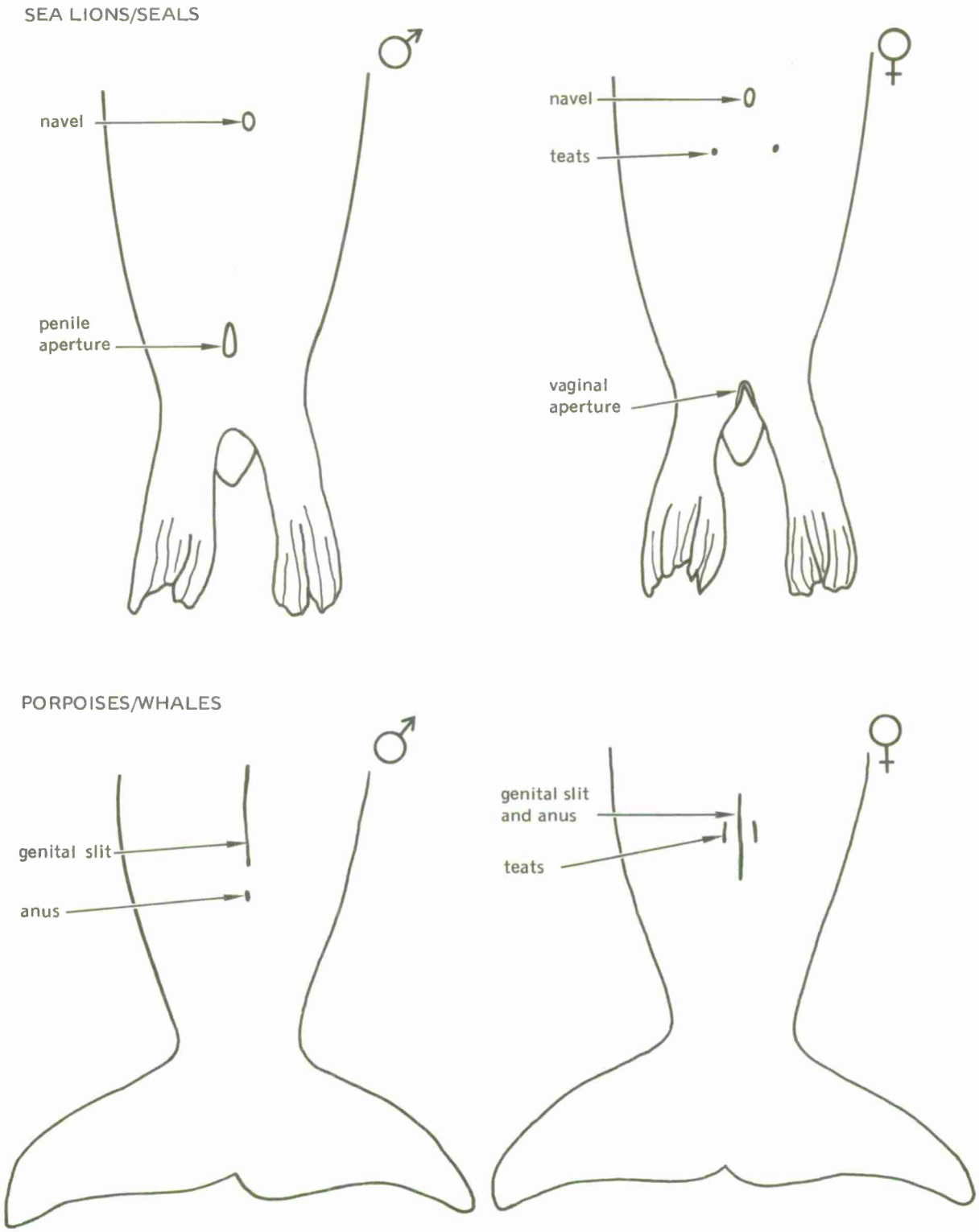


Figure 5.4. Sex identification characteristics.

The sex of mature California sea lions can be easily and accurately determined. The males are much larger than the females; approximately 800 pounds and 7 to 8 feet long for the males as compared to 400 pounds and 6 feet long for the females. The males also have a prominent crest down the center of their foreheads which the females lack, and the females are usually a lighter brown color than the males. The younger, sexually immature animals ordinarily have to be physically examined in order to determine their sex (figure 5.4, top).

### Species

To determine the exact species and genus of an unknown animal a key would be used in conjunction with exacting body measurements. An easier and more practical method is to use a guide such as *Marine Mammals of California,* * a very useful and informative booklet for fast identification.

## TRANSPORT

The transport methods described include the preparations for transport, long- and short-time transport methods, normal care during transport, additional precautions, and emergency procedures that may be required.

### Sea Lions

Sea lions present few transport problems. The animals spend a considerable amount of time on land and do not have to be kept damp as do the porpoises and whales. However, the animal should not be transported in closed or poorly ventilated boxes because of the possibility of death from heat prostration. A transport cage such as is shown in figure 5.5 can be constructed easily and cheaply. The cage should have a water-proof liner in order to retain any excrement during transport. The animals need not be fasted the day before a transport since the animal does not rest heavily on its stomach as porpoises and whales do. Nevertheless, because of the strong odor of sea lion feces, the attendant's ride is more pleasant if the animal is not fed the day before a trip.

For short distance transport of wild sea lions, the animals are sometimes wrapped in the nets used to capture them or placed in coarse mesh gunny sacks.

Because of the sea lion's natural behavior of remaining out of the water for several hours daily, long transport trips do not adversely affect these animals.

### Porpoises and Whales

The Atlantic bottlenosed dolphin, *Tursiops truncatus,* is the marine mammal most frequently exhibited in commercial oceanariums and is used extensively for government and university research. The popularity of this animal is due to the relative ease with which it is captured and its adaptability to captivity, long life in captivity, and trainability.

---

* *By Anita E. Daugherty, California Department of Fish and Game, Sacramento, 1965.*

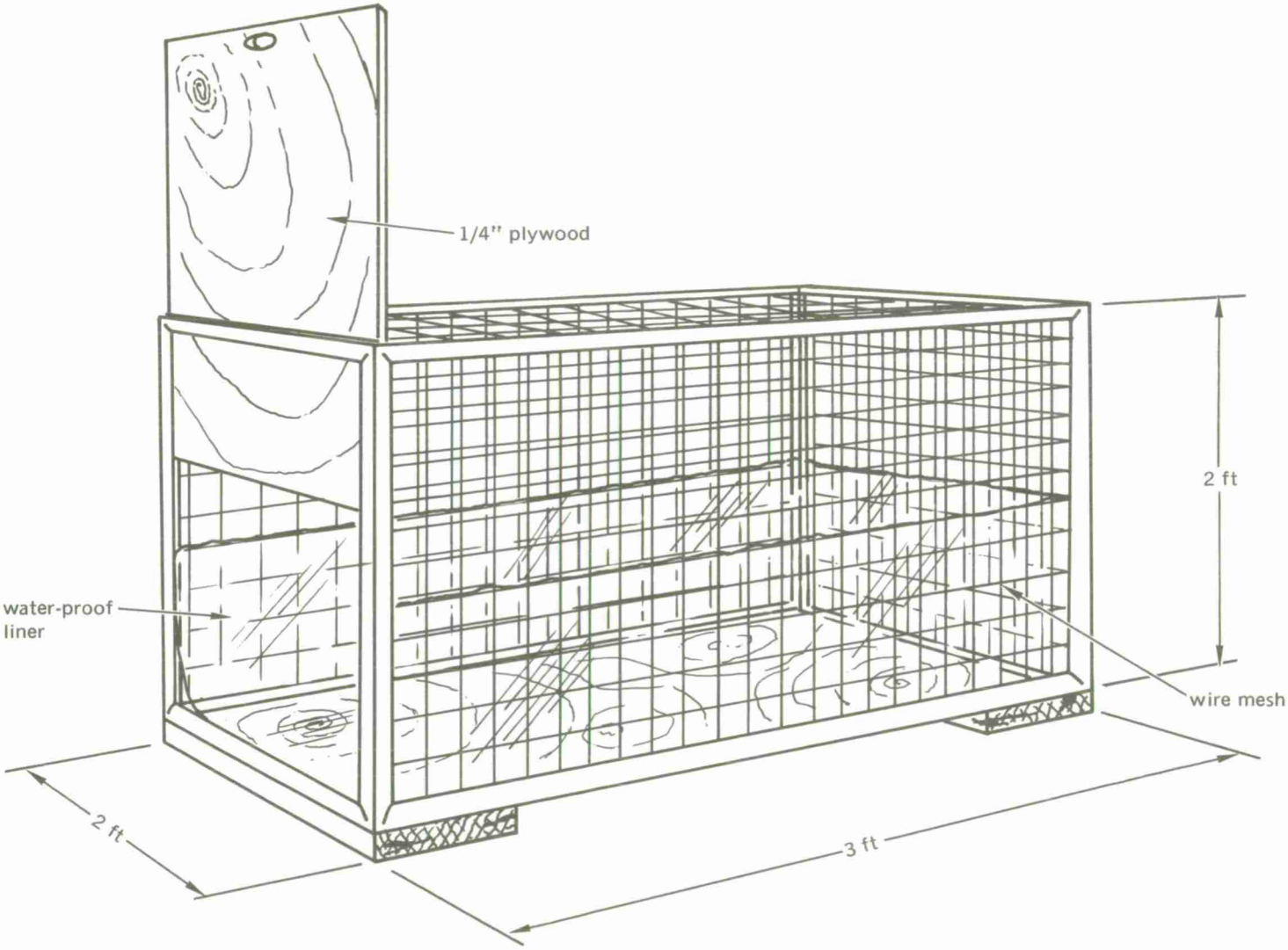


Figure 5.5. Sea lion transport cage (for a 50-lb, 3-ft animal).

To prevent injury and costly mistakes, certain physiological characteristics should be understood and taken into consideration whenever porpoises and whales are removed from the water. Whether in transporting the animal thousands of miles or in routine handling, some basic procedures must be observed.

Vulnerable Characteristics of Porpoises and Whales

Breathing. When a porpoise or whale is out of the water and placed on a hard surface the weight of the animal exerted against the rib cage reduces the animal's lung capacity. Consequently, the animal must raise the weight of the upper body upon every inhalation in order to achieve a normal volume. This becomes quite fatiguing for the animal and for this reason these animals are laid on their sides when they are out of water. Also the animal is unstable in an upright position and if left unattended, might roll over and be injured.

Drugs are not normally given to calm thrashing animals because of complications such as restriction of the animal's breathing.

Antibiotics and vaccinations should be administered by a veterinarian, prior to the transport of newly captured animals. Pneumonia and erysipelas are currently guarded against by this method.

Body Cooling. Porpoises and whales do not have sweat glands to regulate body temperature as other mammals do. Instead, marine mammals use their water environment as a cooling medium much as water-cooled engines do. If the animals are removed from the water and allowed to become dry and overheated, severe internal and external damage results. The skin becomes dry and cracked and subject to invasion by infection, and serious eye problems can develop.

The animal's entire body must be kept wet or damp as much as possible. However, in all methods used for this, care must be taken not to allow water to get into the animal's blowhole. This could cause severe discomfort or even drowning.

To keep the animal sufficiently cool, a variety of steps may be taken, depending upon the circumstances and materials available. In the older methods of transport, the animals are kept wet manually with either pails of water, sponges, or the semi-automatic Hudson garden sprayer. An attendant must continually spray the animals or pour water over them. The water can be fresh or seawater, but the corrosive power of seawater makes its use inadvisable in, for example, an airplane. The dorsal and pectoral fins, tail flukes, and melon are areas of maximum heat transfer and should remain damp at all times (figure 5.6).

Pouring pails of water periodically over the animal was frequently used during capture trips and in small boats where sophisticated transport equipment was not available.

The sprayers come in a variety of sizes (1, 2, 4, and 5 gallons). Water is poured into the reservoir and the unit is then pressurized. The unit is easily portable and the water discharge can be adjusted from a fine fog to a steady stream. The garden sprayers have proved very effective and are popular with most animal handlers.

In order to maximize the cooling effect of the water, a soft absorbent covering can be placed on the animal to retain the moisture and provide cooling by evaporation. Terry cloth, flannel, and cotton sheets work very well. Air pockets that form in the material should be eliminated as the skin dries under such areas.

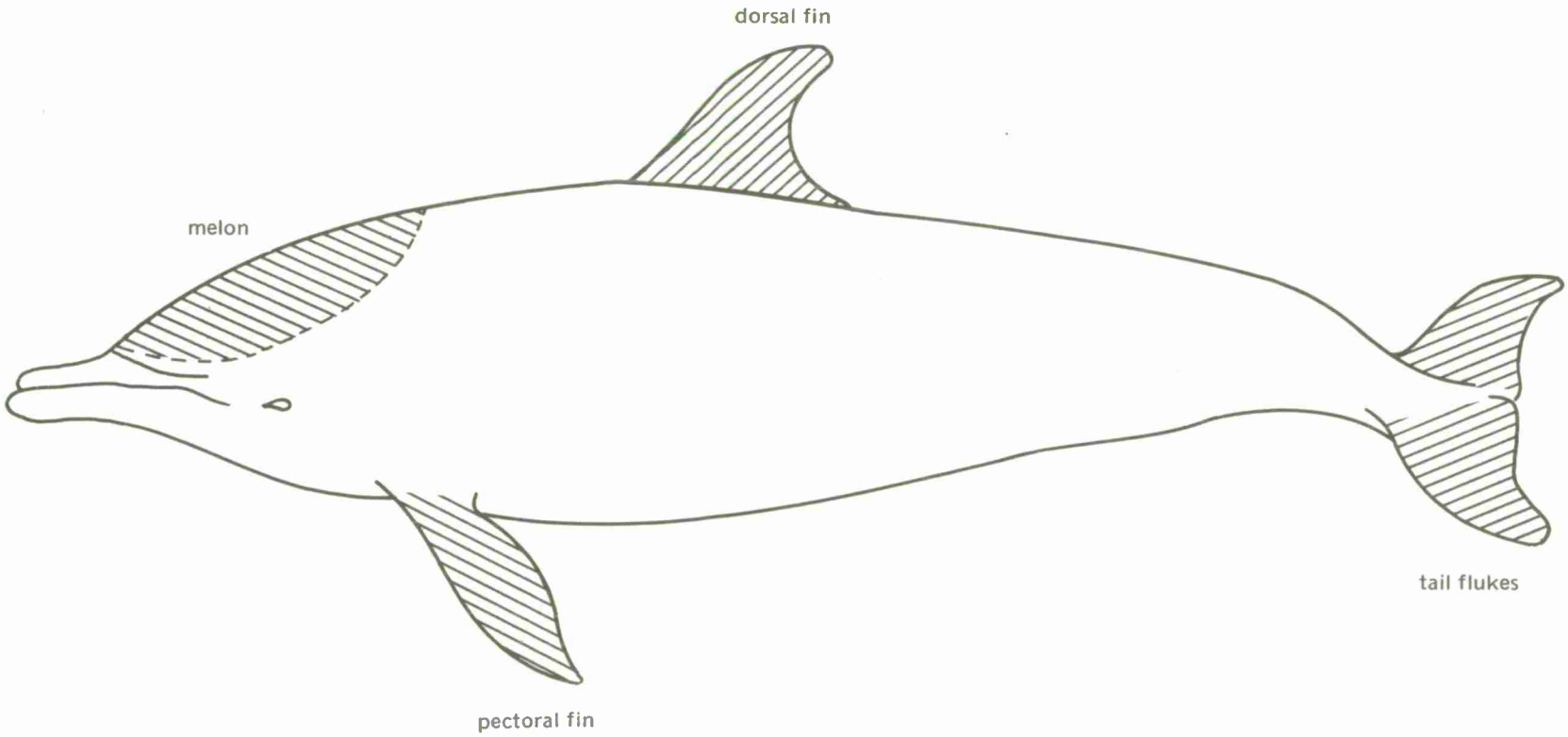


Figure 5.6. Major areas of heat transfer.

Care again must be taken when covering the animal so as not to cover the blowhole. A large hole can be cut out of the body covering and centered over the blowhole. This cover should be periodically inspected to ensure it remains correctly placed.

Eye Protection. The eyes of a porpoise or whale are easily injured and permanent blindness can be the unfortunate result of one careless mistake. Avoid getting sand, dirt, or fingernails into or around the eyes. Before, during, and after a transport the eyes should be checked to ensure that they are free of foreign objects and that they are not in contact with rough surfaces. While animals are being loaded, care must be taken to ensure that the stretchers and cloths are not covered with sand that eventually could harm the animal. An improved stretcher design has large eye holes to prevent irritation from the stretcher.

If the animals are removed from the water even for a short time, the eyes should be protected from bright light by covering them with a soft, damp cloth. When the animals are covered by sheets, be sure the folds in the cloth do not create pressure points at the eyes.

It should be noted that normally a fluid is discharged in the animal's eyes, which cleans and lubricates them. The animal looks as if it is crying.

Body Protection. The animals have a tender skin which is easily cut from careless handling. Sharp objects and rough surfaces should be avoided when the animals are carried by any means. Special attention should be paid to the flippers and flukes, because of their susceptibility to injury. After the animal is removed from the water, it should be placed on a mattress or other soft padding. A three-inch-thick piece of closed-cell plastic foam works extremely well. Old bed mattresses, foam rubber and inflatable air mattresses have also been used with satisfactory results. The important things to remember are that the mattress should be longer than the animal and that there should be no hidden sharp objects (such as springs, or nails) in the mattress that would cause injury.

When an animal is placed in a stretcher or on a mattress, the pectoral fins must be placed in natural positions along the sides of the animal or through the appropriate holes in the stretchers.

The animal should be inspected periodically to ensure that it is properly positioned in the stretcher and is being kept cool. The animal should be adjusted so that there is room between the edges of the pectoral fins and the stretcher. The same precaution should be taken with whales, but because of a whale's weight such adjustment is almost impossible out of water. If a major pressure point is discovered the stretcher can be cut slightly at the trouble area to relieve the pressure.

Normally when a porpoise is placed in a stretcher or held firmly, it will lie motionless and docile. If however, it thrashes about, the animal should be restrained to prevent injury. Rolled up bath towels make excellent, soft, strong restraints. If diving weight-belts (without weights) or automobile seat belts are used they should be padded. While this is being done, the animal should be examined to see whether it is uncomfortable or being injured, especially by wrong positioning of the pectoral fins and poking by sharp objects. If no cause for the disturbance is discovered, a damp towel or piece of net placed over the animal's head and eyes may quiet him. If restraints are necessary to prevent continued thrashing, they should not cut the animal or cause pressure points.

A porpoise or whale should not be fed at least 24 hours before it is to be transported, to allow its stomach to be empty. This minimizes the amount of fecal material which would contaminate the cooling water. Also the food in the stomach may contain bones that could puncture the stomach wall if the animal rests on its stomach.

Techniques for Porpoises and Whales

Some of the early techniques and equipment used to transport porpoises were very crude and many animals were injured or killed. Animals were transported across country in the backs of pickup trucks and station wagons. A trip of several days usually ended with the animal's death. Not that all unsophisticated methods are undesirable, dangerous, and should not be used; rather when these older methods are used, more constant attention is required to prevent injury.

The simplest method of transporting a porpoise is to place it on an old mattress in the back of a truck and drive away. This method is still perfectly acceptable if the animal is correctly attended by being kept damp and injuries are prevented.

To ease the handling procedures, the mattress can be placed in a water-proof box. A further refinement is to cover the mattress with a heavy plastic sheet (figure 5.7). At the end of the trip the mattress is still dry and easy to handle. However, drying and overheating can occur when an animal is transported on smooth sheets of plastic film. A technique that is especially helpful in ensuring that the cooling water reaches all parts of the body is to place sponge rubber or a similar absorbent material under the animal and between the flippers and the animal's body. The sponge material allows a freer flow of water around the animal, thus reducing the body temperature and preventing dryness.

The stretcher method was an innovation. Because of incorrect design, the early stretchers caused sores at pressure points (figure 5.8). The sores were due either to excessive heat build-up or poor blood circulation in these areas.

Improved stretcher designs provide: no pressure points, eye holes, padded holes for the pectoral fins with water storage bags to keep them constantly wet (figure 5.9), and a tail fluke holder.

Care should be taken to ensure that the edges of the pectoral fins do not rub against the stretcher during movements. With the present stretcher design, sores are caused only in these areas when the animal is not placed in the stretcher properly.

A very economical and highly versatile transporter can be constructed by using "U" bracket assemblies to support a porpoise in a stretcher. A water-tight bag can be attached to the assembled unit for use in airplanes or helicopters. This device is very effective for transporting animals where space is limited, as in small boats and helicopters, because the animal is positioned first in the stretcher and then the frame and bag are set up around it (figures 5.10 and 5.11).

Several methods of transport are more advanced in that they require less continuous attendance. One automatic transporter system is a closed system (the cooling water is recirculated) that can be used with a charcoal filter (figure 5.12). The animal and stretcher are placed on a framework with a water-proof bag attached. A series of spray nozzles is attached to the stretcher poles, and the cooling water is sprayed over the animal by a pump

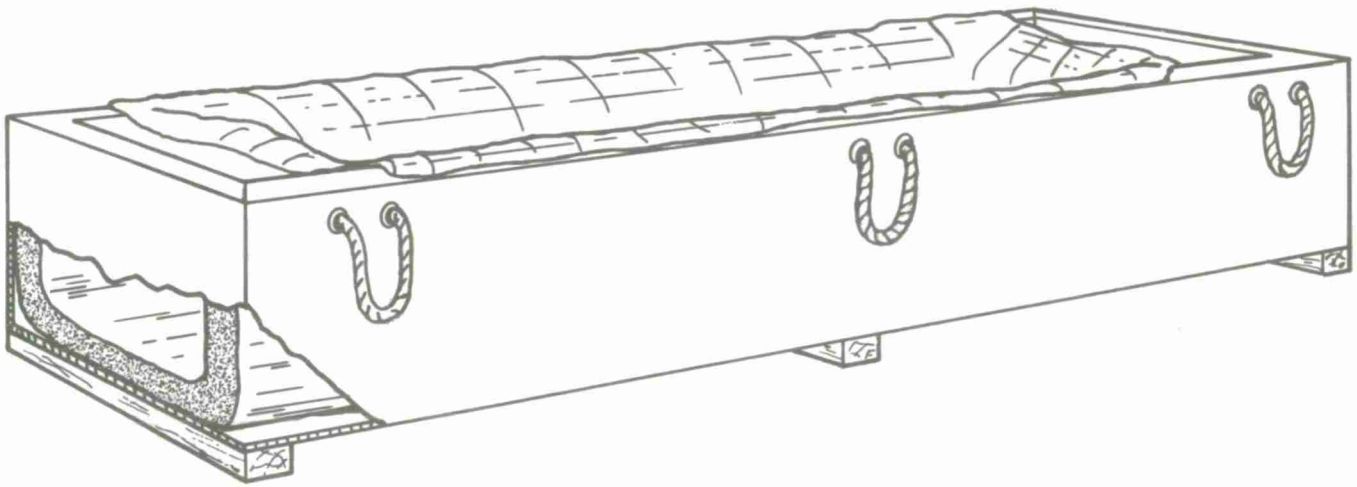

Figure 5.7. Simple porpoise transport box (materials: plywood and foam rubber).

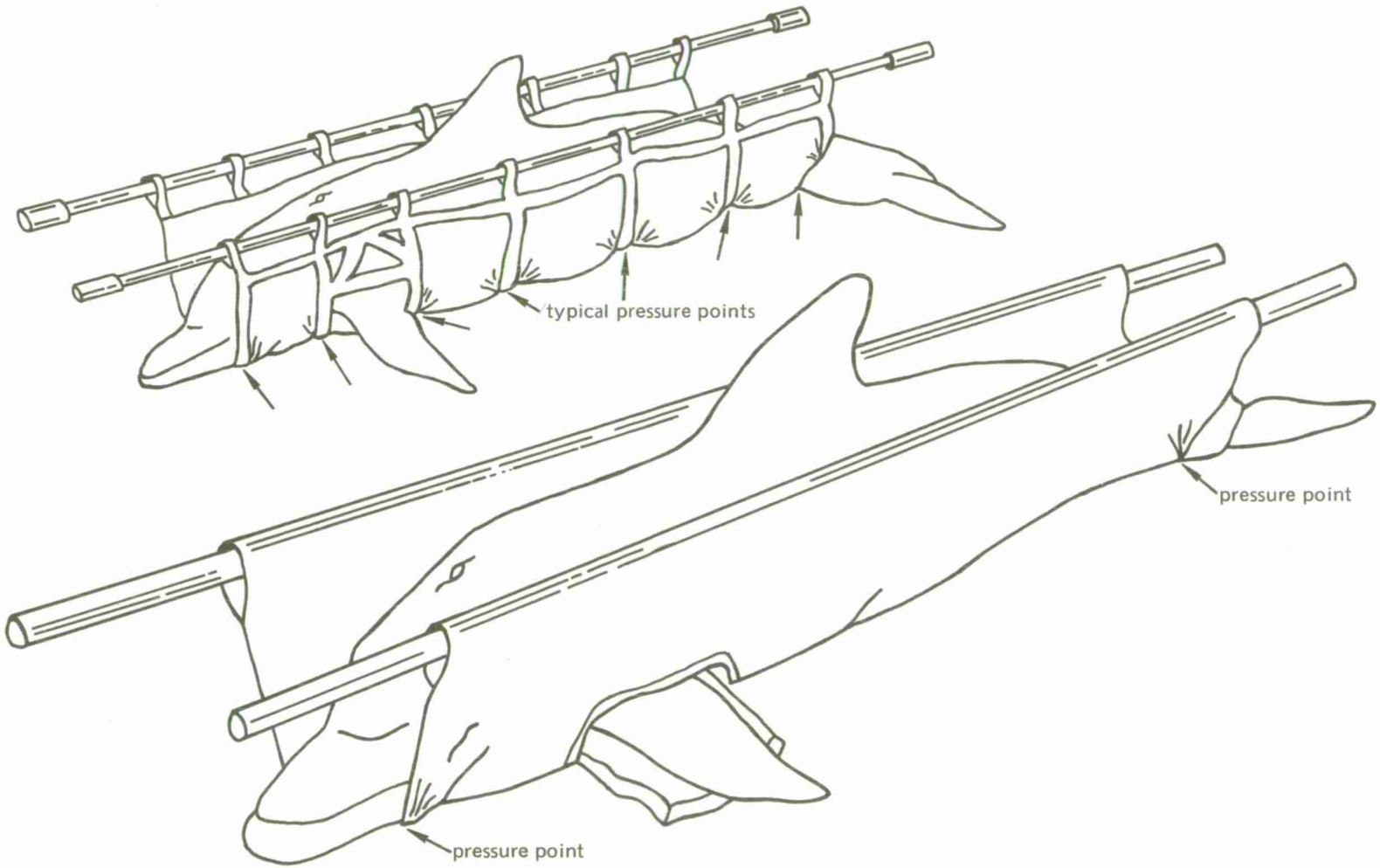


Figure 5.8. Incorrect stretcher designs.

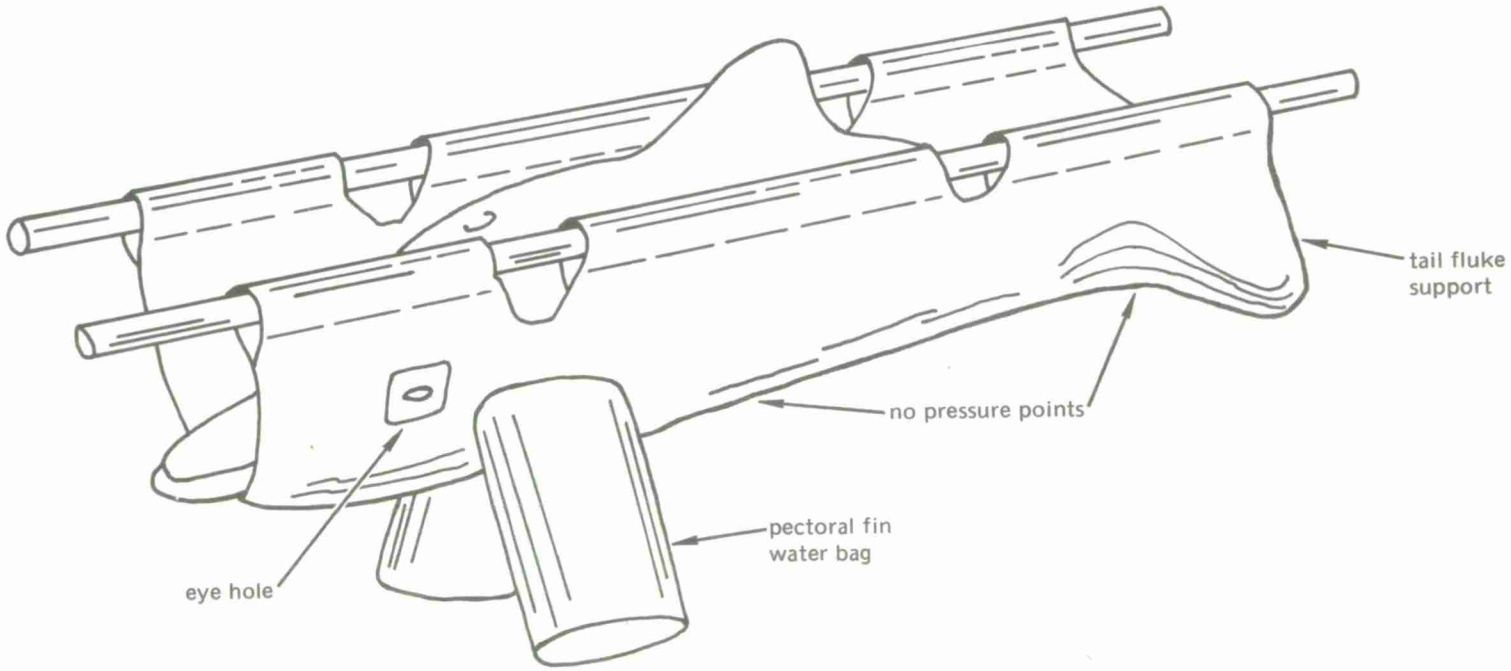


Figure 5.9. Correct stretcher design.

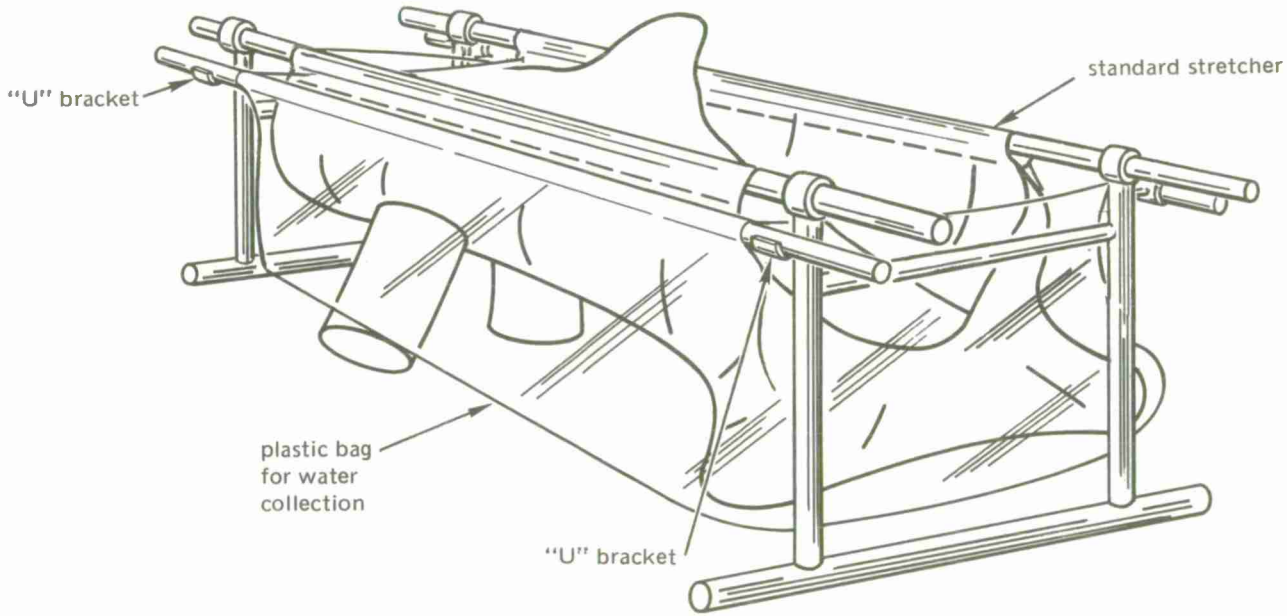


Figure 5.10. "U" bracket transport device.

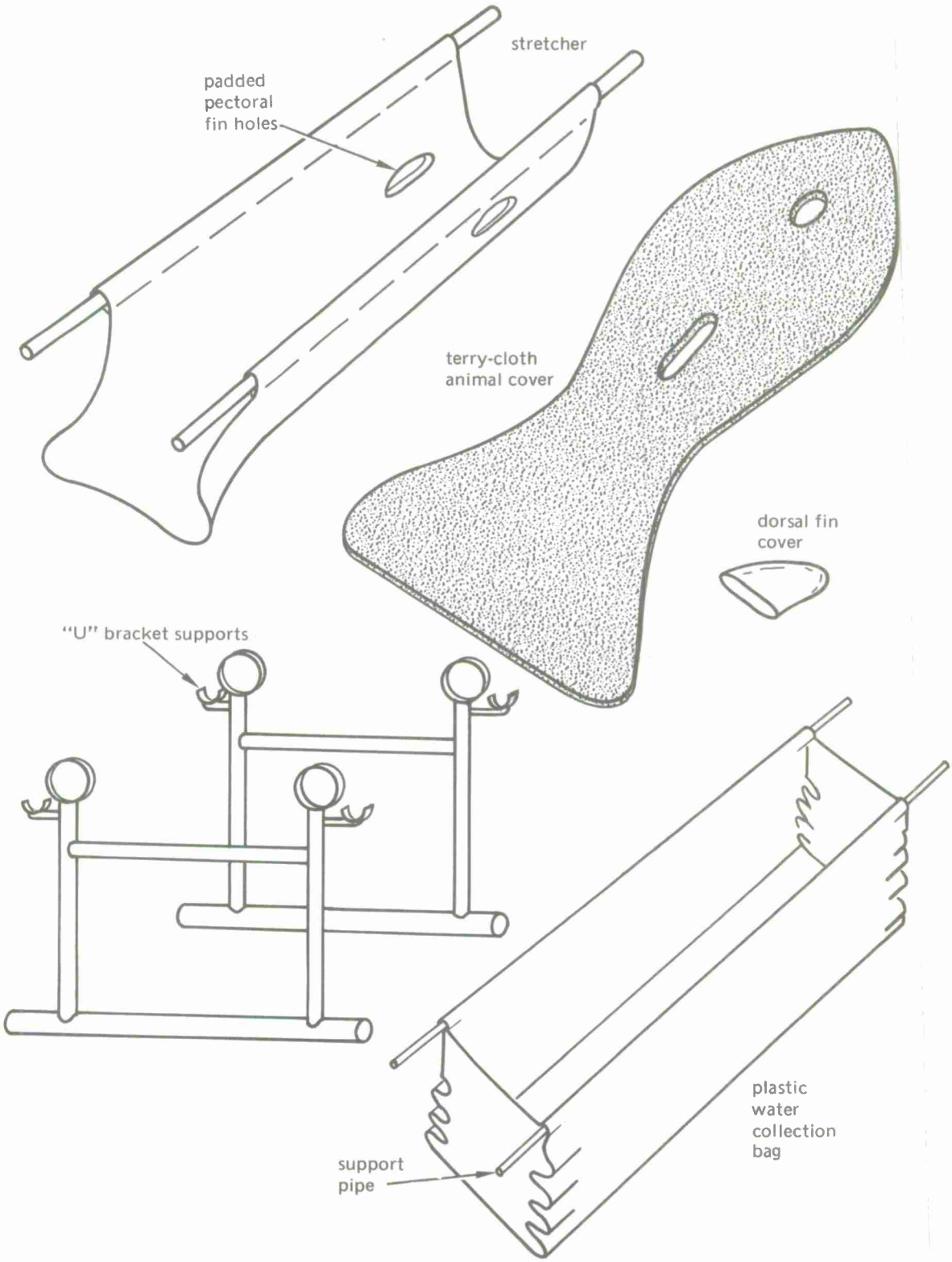


Figure 5.11. Disassembled parts of "U bracket" transport device.

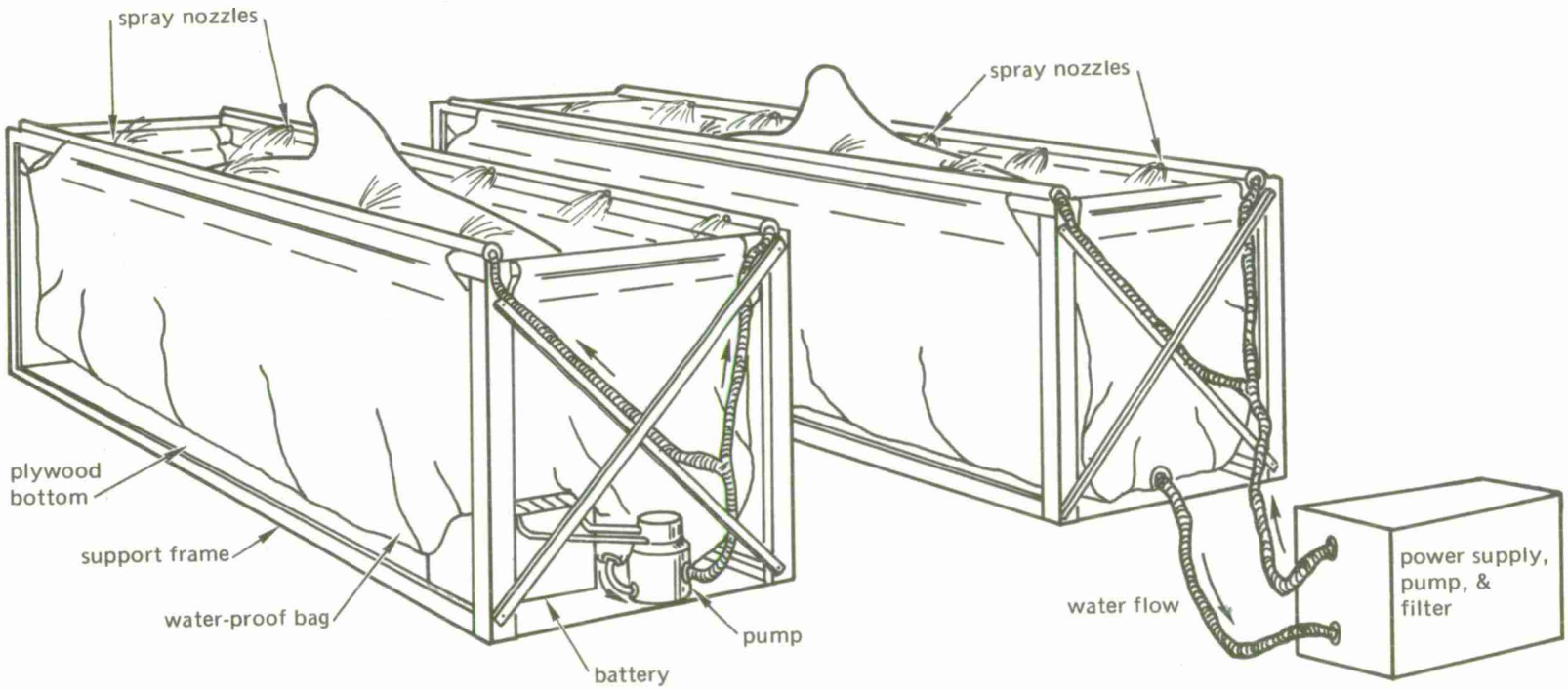


Figure 5.12. Two types of re-circulated water transporter.

system powered by a 6-volt storage battery. A hose from the bottom of the water-proof bag provides a return path, via the filter, for the water. The advantages of this system are the decreased handler time and the reduced health hazard provided by the filter system. After a few hours of travel with the earlier watering systems, the water would become contaminated with urine and fecal material.

The disadvantages of this system are that the filters easily become overloaded and the spray nozzles clogged. The spray is really not effective in high winds (on the back of a moving truck, for instance), because the water is blown out of the transporter. Furthermore, the pectoral fins are not sprayed directly, the water draining down the sides of the stretcher being relied on to dampen the pieces of cloth wrapped around the fins. This system does not always keep the fins sufficiently damp to prevent drying and cracking.

Like the porpoise unit, the whale transporters currently used are also closed systems. However, there is a greater amount of water (300 gallons or more) in the bottom of the transporters and the water does not become as contaminated as in the smaller porpoise transporters.

The latest transporter design is the Self-Contained Animal Transport (SCAT) system (figure 5.13). This transporter was developed to provide a reliable, long-range, long-duration transport system with a minimum of handler attendance. The cooling water is used only once. By using a pressurized water container, circulation pumps and large automobile batteries are not needed. Also filters and the problems related to their use are eliminated and the health hazard is reduced. After use, the water collects in the bottom of the transporter bag. However, it can be used again in an emergency, such as unexpected delay during transport.

Experience gained after several years of transporting porpoises, recording the length of time each animal was out of the water, and measuring the amount of water used indicates that about one gallon of water per hour provides sufficient cooling. Using the special spray nozzles of the SCAT system allows maximum utilization of a limited amount of water.

All of the above methods for transporting porpoises and whales have been used often and successfully in airplanes, helicopters, trucks, and boats with little or no modification because of the vehicle used.

No methods are presently available that would allow porpoises to be carried floating in water in a transporter device. The animal could be severely injured during movement of the water in the container by being knocked around. However, porpoises have been shipped from Florida to Europe in a swimming pool aboard a passenger liner, in which they have room to avoid being thrust against the sides of the pool.

### Precautions

During airplane landings and take-offs the animals usually cannot be attended by handlers, who have to be belted in their seats, and so last-minute checks should be made to ensure the animals' safety. Typically, it should be ascertained that stretcher poles are secured against any rough landings or sudden flight maneuvers, and the proper position of any cloth coverings should be verified. As soon as possible after the actual landing or take-off the animals should be inspected again to see that they have not shifted in the stretcher and that their pectoral fins are not rubbing against the stretcher.

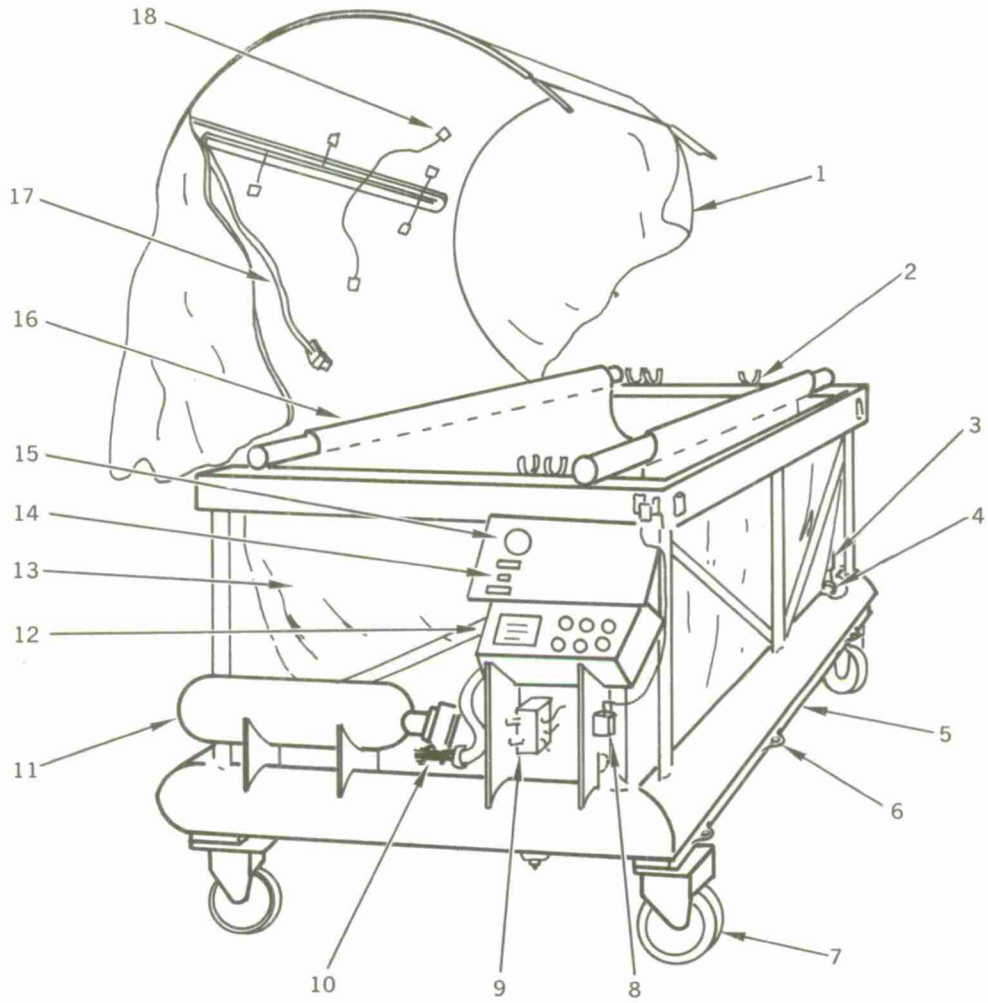


1. Canopy
2. Stretcher Support Brackets
3. High-Pressure Air Relief Valve
4. Water Fill Connection
5. Main Frame W/Water Reservoir
6. Transporter Tie-Down Brackets
7. Locking Swivel Wheels
8. Solenoid
9. Timer for Intermittent Spray
10. Regulator
11. Air Pressure Flask
12. Power Supply for Timer
13. Canvas Bag
14. On-Off Switch
15. Pressure Gauge
16. Stretcher
17. Spray Supply Hose
18. Spray Nozzles

Figure 5.13. Self-contained animal transport (non-circulating water).

The cabin altitude pressure of the transporting aircraft should be maintained below 5000 feet, and if possible, around 2000 to 3000 feet. Cabin temperature should be maintained at around 55° F or lower to keep the porpoises comfortable, to reduce the amount of cooling water necessary, and to minimize the odors that accompany transport.

It is rather common to ship animals on commercial airlines either attended or unattended, as some freight managers are aware of the special handling requirements. If a commercial method of transport is required it is advisable to notify the airlines at least two weeks in advance, so that any special arrangements can be made and space reserved.

Special permits may be required to move animals into or out of certain states. For example, Hawaii requires an import permit for whales and porpoises and prohibits the importing of female sea lions.

In case of hoisting- and moving-equipment breakdown, the transport of porpoises and sea lions can usually be accomplished safely with sufficient manpower. But when moving whales, properly functioning heavy equipment is required. No matter how many people are available, they cannot lift a large whale out of a transport box.

When trying new procedures or when instructing inexperienced personnel in the more complex handling procedures, there should be, if possible, a rehearsal before an animal is actually handled. Stretchers and lifting slings should be prepared as completely as possible before animals are lifted out of the water.

If an animal is transported along an unfamiliar route, the way should be checked for detours, obstructions or rough roads prior to the actual transport. Transport times should be noted so that aircraft schedules can be met or equipment and manpower coordinated. An event log should be taken on each long-range or unusual transport in order to compile time-motion data for future use.

## Emergency Procedures

Because of the reduced oxygen content as altitude increases, an emergency oxygen bottle should be available during air transport. If an animal experiences any respiratory difficulties, such as unnatural or labored breathing, the oxygen from a pressurized cylinder can be vented into the blowhole as the animal breathes. It is neither desirable nor necessary to place an oxygen mask directly on the animal because the standard demand-type regulators on most airplanes are not capable of delivering the volume of oxygen required by the animal for an inhalation. The animal can be helped best by simply directing the oxygen flow from the supply hose to the blowhole area during inhalation.

Porpoises are not normally kept in freshwater swimming pools but if an emergency prevents completion of the transport, a freshwater pool can be used as a temporary holding facility. For short periods, the chlorine that is usually in a pool causes no difficulty.

Improvisation is often necessary in an emergency. Blankets can be used as emergency stretchers, and rough transport devices can be fabricated from available materials safely if the important physiological requirements are met.

An emergency repair kit consisting of repair parts, tools, and extra items, such as tape, rope and similar materials, should accompany any long-range transports.

## ADAPTATION

### Placement in Water

There are two common ways for placing porpoises in the water of a holding or training tank or pen. First, and safest, the animal may be lowered into the water while still on the stretcher and then floated free while the handlers keep the animal from becoming entangled in the stretcher. The animal must be carefully restrained while the pectoral fins and tail flukes are cleared from the stretcher. When the animal is partially clear of the stretcher, the stretcher can be quickly lowered to free the animal. Whales are placed into the water in the same way.

The other method is to place the porpoise on the enclosure's walkway or pool edge and roll it into the water. The animal should be positioned where there is enough room to swim in after it enters the water. Care again must be taken to ensure that the animal does not become entangled in the stretcher as he is rolled free. Whales are not normally placed into the water by this method because of their large size and the difficulties involved.

### Feeding

In the wild, marine mammals are predators, normally catching and eating only live fish and squid. A major problem encountered with porpoises and pilot whales is in getting the animals to eat dead fish. Usually after a few days of ignoring the fish offered, the animal will eat a dead fish thrown a short distance in front of its mouth as it is swimming. At first the porpoise might bite the fish or hold it in his mouth for a few minutes only to spit it out. The animal might carry the fish for longer periods of time and even play with it. Eventually, however, the animal will eat one fish, after which feeding adaptation continues rapidly.

There are other ways in which to persuade new animals to eat. Sometimes placing the new animals in a tank with animals that are already eating helps the newer animals adapt faster to a dead fish diet. There seems to be a natural competition among the animals, which can be used to advantage. This practice, however, can be risky if not continually monitored. The older residents may be too aggressive in their feeding behavior and may overpower the new nonfeeding animals. After a few such encounters the new animals will usually be very reluctant to try to compete for a fish. It is also possible to place live fish into a tank or pool and the animal will feed on the live fish and may inadvertently eat some dead fish thrown in with the live ones.

Pilot whales sometimes have to be force-fed by placing a tube in the animal's mouth and stomach and then pumping in liquified fish. A whale can also be force-fed by prying the animal's mouth open and forcing whole fish into the esophagus. A normal reflex then causes the animal to swallow these fish. Injections of liver extract containing B vitamin are sometimes given to stimulate the animal's appetite. Occasionally an animal will fail to respond to any of the above methods and will have to be released because of the added expense and extra manpower required to maintain him.

There are seldom any problems in adapting sea lions and killer whales to eat dead fish. Although the animals are predators like the porpoises and pilot whales, they seem to have a much stronger hunger drive and usually eat the first time any suitable food is offered.

### Touching and Holding Techniques

It is futile for handlers to try to touch or hold a newly captured porpoise in a large enclosure or pool. The animals are easily frightened when people attempt to grab them and the large area affords the porpoises sufficient swimming room to outmaneuver people. The porpoises usually win such swimming contests.

Instead, nets should be used to reduce slowly the size of the animal's swimming room. An animal can then be carefully restricted or tangled in the net so the handlers can grab him without harming him. The handlers should be fully briefed on the planned procedures and should know that porpoises can drown when entangled in a net. If an animal becomes trapped in a net, one handler should hold its head above water immediately while the animal is being untangled. The porpoise should be held in a firm "bear hug" grip between the pectoral and dorsal fins. A second handler should hold the animal's tailstock to prevent the animal from swimming. The second handler should also assist with any necessary stretcher manipulations. If the animal is not held with a strong firm grip, it senses a half-hearted attempt at restraint and may struggle to get free and injure itself. Caution should be exercised whenever the animal's pectoral fins are held, as its "shoulder" can easily be dislocated by rough handling.

In routine, short-term work with the animals, it is not always necessary to use custom-tailored stretchers with pectoral fin holes and tail fluke holders. A simple stretcher can be used as long as the pectoral fins are held against the body and normal safety precautions are taken.

## POINTS TO REMEMBER

One person in charge of capture or movement.
Obtain sufficient help to ensure animal safety.
Practice and rehearse new procedures.
Handle with care, prevent injuries.
Keep animals cool and damp.
Protect eyes from scratches and bright light.
Hold animal's head out of water during capture and netting.
Fast animals prior to transport.
Improvise during emergencies; relax, don't panic.

# 6. INDEX


aquatic mammal, 2.3
Archaeoceti, 2.1, 2.4
    definition, 2.7
Atlantic bottlenose dolphin
    see *Tursiops truncatus*
baleen whales
    see Mysticeti
behavior
    Cetacea
        aggressive, 3.8–3.9
        echolocation, 3.9
        fear reactions, 3.8
        typical, 3.5–3.7
    Pinnipedia
        fear reactions, 4.2–4.3
        learned, 4.3–4.5
        natural, 4.1
blue whale, 2.4
body temperature
    Mysticeti, 5.13
    Odontoceti, 5.13
    Pinnipedia, 5.13
capture
    captured Cetacea
        release into enclosure, 5.26
        rules, 5.26–5.27
        shock, 5.6
    wild Cetacea, 5.1–5.7
        laws, 5.8
        modern methods, 5.2–5.7
        old methods, 5.1–5.2
        prices, 5.8
    wild Pinnipedia, 5.5
Carnivora, 2.4, 2.5, 27
Cetacea, 2.7
    appendages, 5.14
    capture methods, 5.1–5.8
    echolocation, 3.9
    phylogeny, 2.4
    suborders, 2.4
    swimming speed, 5.5–5.6

taxonomic order, 2.4
transporting, 5.11–5.25
conditioning
bridge stimulus, 3.2–3.3
reinforcement, 3.2–3.4
to eat dead fish, 3.3–3.4
Delphinidae, 2.3
definition, 2.7
included genera, 2.4
*Delphinus delphis*, 2.6
capture, 5.6
description, 2.7
dolphin
Atlantic bottlenose
see *Tursiops truncatus*
Amazon River
see *Inia geoffrensis*
common
see *Delphinus delphis*
common usage of term, 2.3, 2.6
fish, 2.6
rough-toothed
see *Steno bredanensis*
spotted Pacific
see *Stenella graffmani*
striped Pacific
see *Lagenorhynchus obliquidens*
white-sided Pacific
see *L. obliquidens*
echolocation, 3.9
definition, 3.9
*Enhydra lutris*, 2.1
description, 2.7
*Eumetopias jubatus*
description, 2.7
erysipelas, 5.13
food
for Odontoceti, 3.4
adaptation to dead fish, 3.3–3.4
adaptation to cut fish, 3.4
daily diet, 3.5
forced feeding, 5.26
supply, 3.5
for sea lions, 4.4
quality, 3.5

freshwater dolphin
see *Inia geoffrensis*
*Globicephala macrorhyncha*, 1.1, 2.8
*Globicephala scammoni*, 3.6
body temperature, 5.13
capture, 5.6
description, 2.8
forced feeding, 5.26
social interaction, 3.7
Hawaiian spinner dolphin
see *Stenella* species
hoop nets, 5.5–5.7
*Inia geoffrensis*, 2.4
description, 2.8
killer whale
see *Orcinus orca*
false
see *Pseudorca crassidens*
*Lagenorhynchus obliquidens*, 1.2, 5.6
description, 2.8
Linnaeus (Carl von Linné), 2.3
marine mammal
capture shock, 5.6
compared to aquatic mammal, 2.6
number of, 2.6
relation to other mammals, 2.1–2.2
sexing, 5.9–5.11
taxonomy of, chapter 2
used for Navy research, 2.4
*Mirounga angustirostris*, 2.5
*Mirounga leonina*, 2.5
*Monodon monoceros*, 2.4
description, 2.8
*Monachus schauinslandi*, 2.5
Mysticeti, 2.1
baleen plates, 2.8
body size, 2.8
definition, 2.8
families, 2.4
narwhal (*Monodon monoceros*), 2.4
description, 2.8
Odobenidae, 2.5, 2.8
Odontoceti, 2.1
aging, 5.4
body size, 2.9
capture methods & devices, 5.1–5.7

definition, 2.9
echolocation, 3.9
families, 2.4
phylogeny, 2.2, 2.4
transportation & handling, 5.11–5.27
*Orcinus orca*, 1.1, 2.6, 3.5
capture methods, 5.5–5.6
description, 2.9
Otariidae, 2.5
description, 2.9
*Phoca vitulina*, 2.5
Phocidae, 2.5
description, 2.9
*Phocoena phocoena*, 2.6
description, 2.6, 2.9
*Phocoenoides dalli*, 2.6
capture, 5.6
description, 2.6, 2.9
phylogenetic tree, 2.2
mammalian, 2.1
*Physeter catodon*, 2.4
description, 2.9
pilot whale
see *Globicephala*
Pinnipedia, 2.9
capture methods, 5.5
heat prostration, 4.5, 5.11
phylogeny, 2.5
sexing, 5.9–5.11
training, chapter 4
polar bears, 2.3
porpoise
common harbor
see *Phocoena phocoena*
common usage of term, 2.3, 2.6
Dall's
see *Phocoenoides dalli*
*Pseudorca crassidens*, 2.4
capture, 5.6
description, 2.10
rough-toothed dolphin
see *Steno bredanensis*
seal
northern elephant
see *Mirounga angustirostris*

southern elephant
see *Mirounga leonina*
harbor
see *Phoca vitulina*
Hawaiian monk
see *Monachus schauinslandi*
sea lion
California
see *Zalophus californianus*
Steller's or northern
see *Eumetopias jubatus*
sea otter
see *Enhydra lutris*
SEA-SEE (vessel), 3.1
selecting marine mammals
Cetacea, 5.8
Pinnipedia, 5.8
Sirenia, 2.10
phylogeny, 2.1
representatives, 2.1
sperm whale
see *Physeter catodon*
*Stenella graffmani*, 2.4
description, 2.10
*Stenella* (species), 2.4
capture, 5.6
spinning behavior, 3.7
*Steno bredanensis*, 2.4
capture, 5.6
description, 2.10
strandings, 5.1
stretchers
designs, 5.18, 5.19, 5.21
proper usage, 2.16
tailgrabber device, 5.2–5.3
taxonomy (chapter 2)
definition, 2.1
of marine mammals, 2.1–2.2
quiz & answers, 2.11–2.14
toothed whales
see *Odontoceti*
training
Cetacea (chapter 3)
adaptation, 3.2
fear arousing situations, 3.7–3.8

gate, 3.3, 3.7
natural behaviors, 3.5–3.7
terminology, 3.1–3.2
Pinnipedia (Chapter 4)
fear arousing situations, 4.2
techniques, 4.3–4.5
terminology, 3.2
transporting and handling
Cetacea, 5.11–5.25
by air, 5.23
closed system transporter, 5.22
emergencies, 5.25
overheating, 5.13–5.14, 5.16
preparation, 5.16
self-contained animal transporter (SCAT), 5.22–5.25
simple transport box, 5.17
stretcher designs, 5.18–5.19
U-bracket transport device, 5.16, 5.20–5.21
Pinnipedia, 5.11
transporter, 5.12
*Tursiops gilli*, 2.4
capture method, 5.6
description, 2.10
*Tursiops truncatus*, 1.1, 2.3, 2.4, 2.6, 3.6
aging, 5.9
appendages, 5.14
behavior, 3.5–3.9
capture of wild, 5.1–5.7
capture of trained, 3.7–3.9, 5.27
description, 2.10
echolocation, 1.2, 3.9
erysipelas, 5.13
health, 5.8
price, 5.8
selection, 5.8
sexing, 5.4
swimming speed, 5.2–5.3
teeth, 5.9
temperature regulation, 5.13
training, chapter 3
transportation and handling, 5.11–5.27
vision, 5.15
*Zalophus californianus*, 1.2, 2.5, 2.7
behavior (chapter 4)
natural, 4.1–4.3
learned, 4.3–4.5

capture methods, 5.5
body size, 2.10
description, 2.10
diving depth, 4.5
sexing, 5.4
training, chapter 4

U153671