AD 763232

TECHNICAL REPORT NO. LWL-CR-08B72

# ELECTRONIC DOG HANDLER SYSTEM

Final Report
Contract No. DAAD05-72-C-0222

by
Westinghouse Electric Corporation
Systems Development Division
Baltimore, Maryland
21203

DDC
JUL 19 1973

June 1973

NATIONAL TECHNICAL
INFORMATION SERVICE

APPROVED FOR PUBLIC RELEASE; DISTRIBUTION UNLIMITED.

U. S. ARMY LAND WARFARE LABORATORY
Aberdeen Proving Ground, Maryland 21005

Security Classification

# DOCUMENT CONTROL DATA - R & D

(Security classification of title, body of abstract and indexing annotation must be entered when the overall report is classified)

| | |
|---|---|
| 1. ORIGINATING ACTIVITY (Corporate author)<br>Westinghouse Electric Corp.<br>Systems Development Div.<br>Baltimore, MD 21203 | 2a. REPORT SECURITY CLASSIFICATION<br>UNCLASSIFIED<br>2b. GROUP |

3. REPORT TITLE

Electronic Dog Handler System

4. DESCRIPTIVE NOTES (Type of report and inclusive dates)

Final Report

5. AUTHOR(S) (First name, middle initial, last name)

--

| | | |
|---|---|---|
| 6. REPORT DATE<br>June 1973 | 7a. TOTAL NO. OF PAGES<br>38 | 7b. NO. OF REFS<br>-- |
| 8a. CONTRACT OR GRANT NO.<br>DAAD05-72-C-0222<br>b. PROJECT NO.<br>c.<br>d. | 9a. ORIGINATOR'S REPORT NUMBER(S)<br><br>9b. OTHER REPORT NO(S) (Any other numbers that may be assigned this report) | |

10. DISTRIBUTION STATEMENT

APPROVED FOR PUBLIC RELEASE; DISTRIBUTION UNLIMITED.

| | |
|---|---|
| 11. SUPPLEMENTARY NOTES | 12. SPONSORING MILITARY ACTIVITY<br>U. S. Army Land Warfare Laboratory<br>Aberdeen Proving Ground, MD 21005 |

13. ABSTRACT

This report is the final report describing the development and test of an Electronic Dog Handler system which remotely monitors and controls the movements of a dog.

The system consists of a control unit held by the operator and a remote unit carried by the dog by means of a harness. The control unit transmits control tones (change direction, down-stay, and recall) to the dog and provides instantaneous readout of the dog's heading, actions (sit, stand, or motion), and range and azimuth with respect to the operator. The remote unit receives signals from the control unit, producing audible command tones for the dog, and transmits heading, action and range data back to the control unit for processing.

DD FORM 1 NOV 65 1473 REPLACES DD FORM 1473, 1 JAN 64, WHICH IS OBSOLETE FOR ARMY USE.

UNCLASSIFIED

Security Classification

Security Classification

| 14. KEY WORDS | LINK A | | LINK B | | LINK C | |
|---|---|---|---|---|---|---|
| | ROLE | WT | ROLE | WT | ROLE | WT |
| | | | | | | |

Security Classification

AS NOTED IN THE NTIS ANNOUNCEMENT, PORTIONS OF THIS REPORT ARE NOT LEGIBLE. HOWEVER, IT IS THE BEST REPRODUCTION AVAILABLE FROM THE COPY FURNISHED NTIS BY THE CONTRIBUTOR.

TABLE OF CONTENTS


| | | Page |
|---|---|---|
| 1.0 | Abstract | 1 |
| 2.0 | Introduction | 2 |
| | Control Unit | 2 |
| | Remote Unit | 2 |
| 3.0 | Remote Unit Operation | 3 |
| | 3.1. Remote Unit Receiver | 3 |
| | 3.2. Remote Unit Control Tones | 5 |
| | 3.3. Remote Unit Range Processing | 5 |
| | 3.4. Remote Unit Action Processing | 5 |
| | 3.5. Remote Unit Compass Processing | 6 |
| | 3.6. Remote Unit Multiplexer | 6 |
| | 3.7. Remote Unit Transmitter | 7 |
| 4.0 | Control Unit Operation | [illegible] |
| | 4.1. Control Unit Receiver, Transmitter, and Diplexer | 7 |
| | 4.2. Control Unit Azimuth (Direction Finding) | 9 |
| | 4.3. Control Unit Range Processing | 10 |
| | 4.4. Control Unit Heading Indicator | 10 |
| | 4.5. Control Unit Action Processing | 11 |
| | 4.6. Control Unit Control Tones | 11 |
| 5.0 | System Implementation | 12 |
| | 5.1. Receiver and Transmitter | 12 |
| | 5.2. IF Strips | 14 |
| | 5.3. Processing Circuitry | 15 |
| | 5.4. Mechanical Fabrication | 15 |
| 6.0 | Recommendations | 15 |
| | 6.1. Mechanical Design | 16 |
| | 6.2. Transmitter | 19 |
| | 6.3. RF Amplifier | 20 |
| | 6.4. IF Amplifier | 20 |
| | 6.5. Direction Finding | 21 |
| | 6.6. Range | 21 |
| 7.0 | Conclusions | 23 |
| | Appendix - Schematics | 24 |

## ILLUSTRATIONS


| FIGURE | | Page |
|---|---|---|
| 1 | Remote Unit . . . . . | 4 |
| 2 | Control Unit . . . . . | 8 |
| 3 | Remote Unit Compass Assembly . . . . . | 17 |
| 4 | Remote Unit Transceiver Assembly . . . . | 18 |

## 1.0 ABSTRACT

This report is the final report describing the development and test of an Electronic Dog Handler system which remotely monitors and controls the movements of a dog.

The system consists of a control unit held by the operator and a remote unit carried by the dog by means of a harness. The control unit transmits control tones (change direction, down-stay, and recall) to the dog and provides instantaneous readout of the dog's heading, actions (sit, stand, or motion), and range and azimuth with respect to the operator. The remote unit receives signals from the control unit, producing audible command tones for the dog, and transmits heading, action, and range data back to the control unit for processing.

## 2.0 INTRODUCTION

The Electronic Dog Handler System is a brassboard system suitable for use in field demonstration and evaluation.

The equipment was designed to meet the following requirements:

CONTROL UNIT

1. The control unit will transmit signals over distances of at least 800 meters to cause the remote unit to emit the following audio tones:
   (1) 400 Hz Sawtooth
   (2) 800 Hz Square Wave Modulated tone
   (3) 2000 Hz Warbling tone
2. The control unit shall provide readouts that will clearly display the following information:
   (1) Distance in meters from handler to dog
   (2) Azimuth of dog with respect to control unit
   (3) Dog Heading
   (4) Action (Sit, Stand, and Motion)

REMOTE UNIT

1. The remote unit will transmit signals over distances of at least 800 meters to the control unit to indicate unambiguously the following actions of the dog:
   (1) Sit
   (2) Stand
   (3) Motion
   (4) Compass Heading
   (5) Range

2. The remote unit will process the three control tones and provide an audible tone discernible to the dog.

Mechanical Design

1. The remote and control unit will be of minimal size and weight. The weight of the remote unit will be below 3 pounds.
2. The remote unit will consist of two separate units which will mount saddle bag fashion on the dog's back.
3. Both the remote and control unit will be battery powered with an objective battery life of 8 hours.

## 3.0 REMOTE UNIT OPERATION

Figure 1 is a block diagram of the remote unit and should be referred to during the following discussion of the remote unit.

### 3.1 Remote Unit Receiver

The remote unit receiver is an FM receiver which is tuned to the same frequency as the control unit transmitter. The received signal (143.8 MHz) and the transmitted frequency (138.2 MHz) in the remote unit are processed in the diplexer by extremely narrow-band low loss filters to prevent interaction of the two signals from degrading the performance of either the transmitter or the receiver.

The received FM signal is then amplified and converted to a 10.7 MHz IF signal by the RF receiver. The local oscillator for the RF receiver is crystal controlled to ensure stability.

The 10.7 MHz signal is further amplified by the IF strip and then the carrier is removed by the frequency discriminator. The output of the frequency discriminator is a composite signal which consists of the three control tones and the 50 KHz range signal.

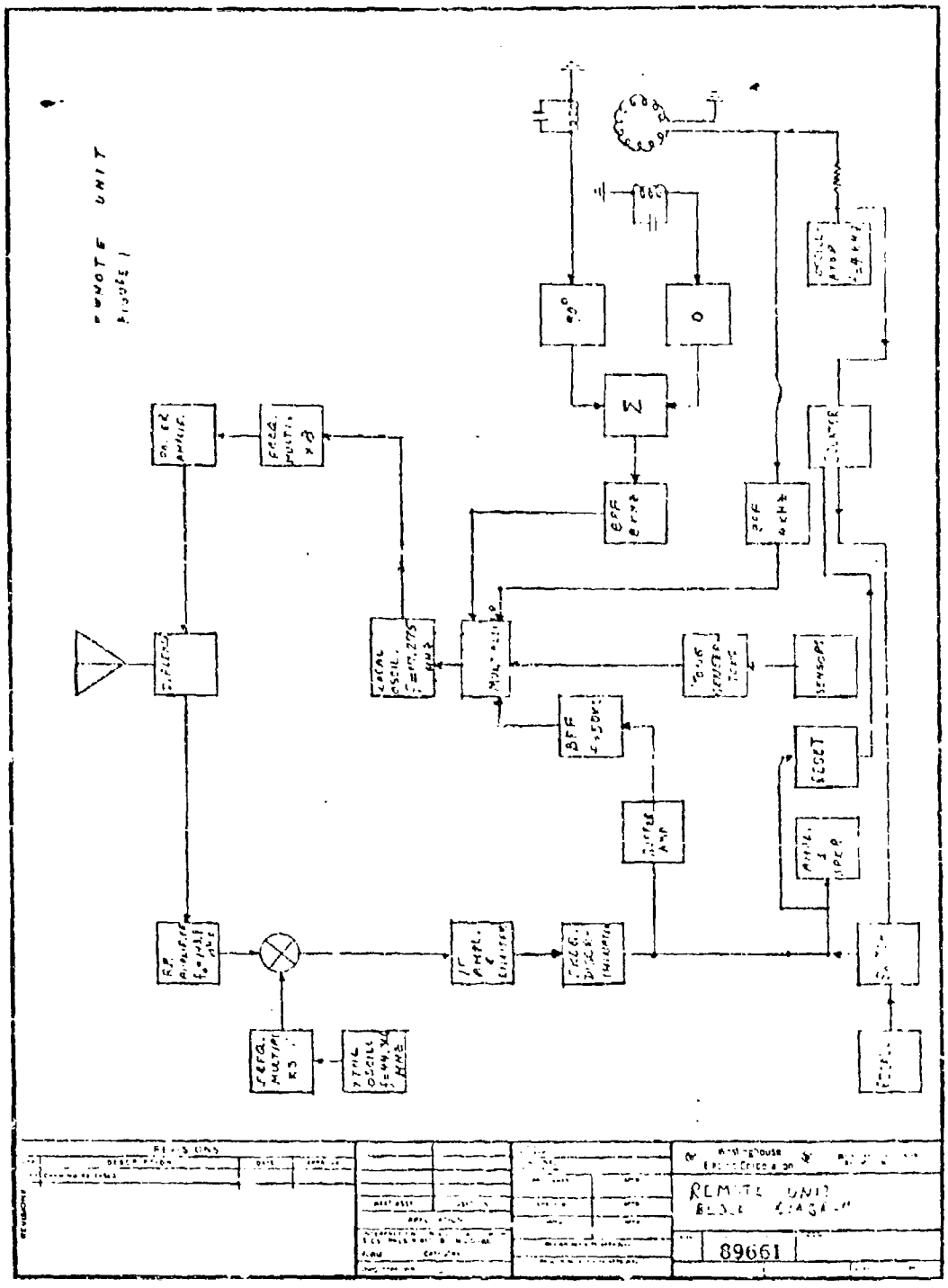


FIGURE 1 Remote Unit

3.2 Remote Unit Control Tones

The output of the frequency discriminator is amplified to the proper level and applied to the speaker to produce the three audio control tones. The frequency response of the speaker is not broad enough to produce a 50 KHz tone audible by the dog.

3.3 Remote Unit Range Processing

The output of the frequency discriminator is also applied to a 50 KHz bandpass filter which separates the 50 KHz range signal from the composite frequency discriminator output. This 50 KHz signal is amplified and then modulates the transmitted signal. A phase modulator circuit on the first doubler in the transmitter is used to modulate the 50 KHz onto the transmitted signal. Phase modulation is necessary due to the bandwidth limitations of the frequency modulator used for the remaining remote unit transmitted signals.

3.4 Remote Unit Action Processing

Action (sit, stand, and motion) indication is provided by two mercury switches. When the dog is in the sitting position, the mercury switches are open and no indication signals are transmitted to the control unit. When the dog stands, the sit-stand mercury switch closes and enables a 2.8 KHz signal to be transmitted to the control unit. When the dog is in motion, the motion mercury switch opens and closes as the dog moves. When the motion switch is closed, a 5.6 KHz signal is enabled and this signal is transmitted to the control unit. An integrator is placed in the 5.6 KHz enable circuitry to prevent rapid fluctuations between stand and motion indications in the control unit.

3.5 Remote Unit Compass Processing

The compass to determine the dog's heading is a fluid-filled electronically driven flux gate compass similar to the compass used on the AN/PSN-7. The compass has three windings - 2 orthogonal sense coils and a drive winding.

The drive winding is driven by a crystal-controlled 4 KHz square wave. This 4 KHz drive waveform is filtered, buffered and modulated onto the transmitted signal. This 4 KHz drive signal is used as the local oscillator in the control unit heading indicator phase detector circuitry. The outputs of the compass are two in-phase 8 KHz sine waves whose amplitudes are proportional to the product of the earth's magnetic field strength and the cosine of the angle between the earth's field and each sense coil. Because of sense coil orthogonality, one output varies as the sine, and the other as the cosine of the heading angle. These outputs are electrically shifted to be 90° out-of-phase with each other, added, and filtered. The resultant is an 8 KHz sine wave whose amplitude varies only with the earth's magnetic field strength and whose phase varies with the heading angle.

3.6 Remote Unit Multiplexer

The sit, stand, motion, and compass signals are combined into a composite signal by the multiplexer in the IF strip. The multiplexer weights the various signals to provide the proper modulation index for each signal and provides a low impedance output to drive the transmitter frequency modulation circuitry.

### 3.7 Remote Unit Transmitter

The remote unit transmitter is a crystal controlled FM transmitter with a power output of 1.6 watts. The transmitter circuitry frequency modulates the composite signal from the multiplexer onto a carrier whose frequency is the transmit frequency ÷8. This frequency is crystal controlled to ensure final output frequency stability. As previously discussed, the range signal is phase modulated onto the carrier at the first doubler stage.

The transmit carrier ÷8 is multiplied by 8 in a series of three frequency doublers and amplified to provide the proper power and transmit frequency for the antenna.

## 4.0 CONTROL UNIT OPERATION

Figure 2 is a block diagram of the control unit and should be referred to during the following discussion of the control unit.

### 4.1 Control Unit Receiver, Transmitter, and Diplexer

The operation of the RF receiver, IF strip, transmitter, multiplexer and diplexer is the same as the remote unit. The only difference is that the transmit frequency is 143.8 MHz and the received signal frequency is 138.2 MHz in the control unit. Note that the control unit transmit frequency is 143.8 MHz and the remote unit receive frequency is 143.8 MHz.

The remote unit transmit frequency is 138.2 MHz and the control unit receive frequency is 138.2 MHz. The use of different transmit and receive frequencies in the same unit with the diplexer to isolate the receive and transmit frequencies allows two way CW communication between the two units.

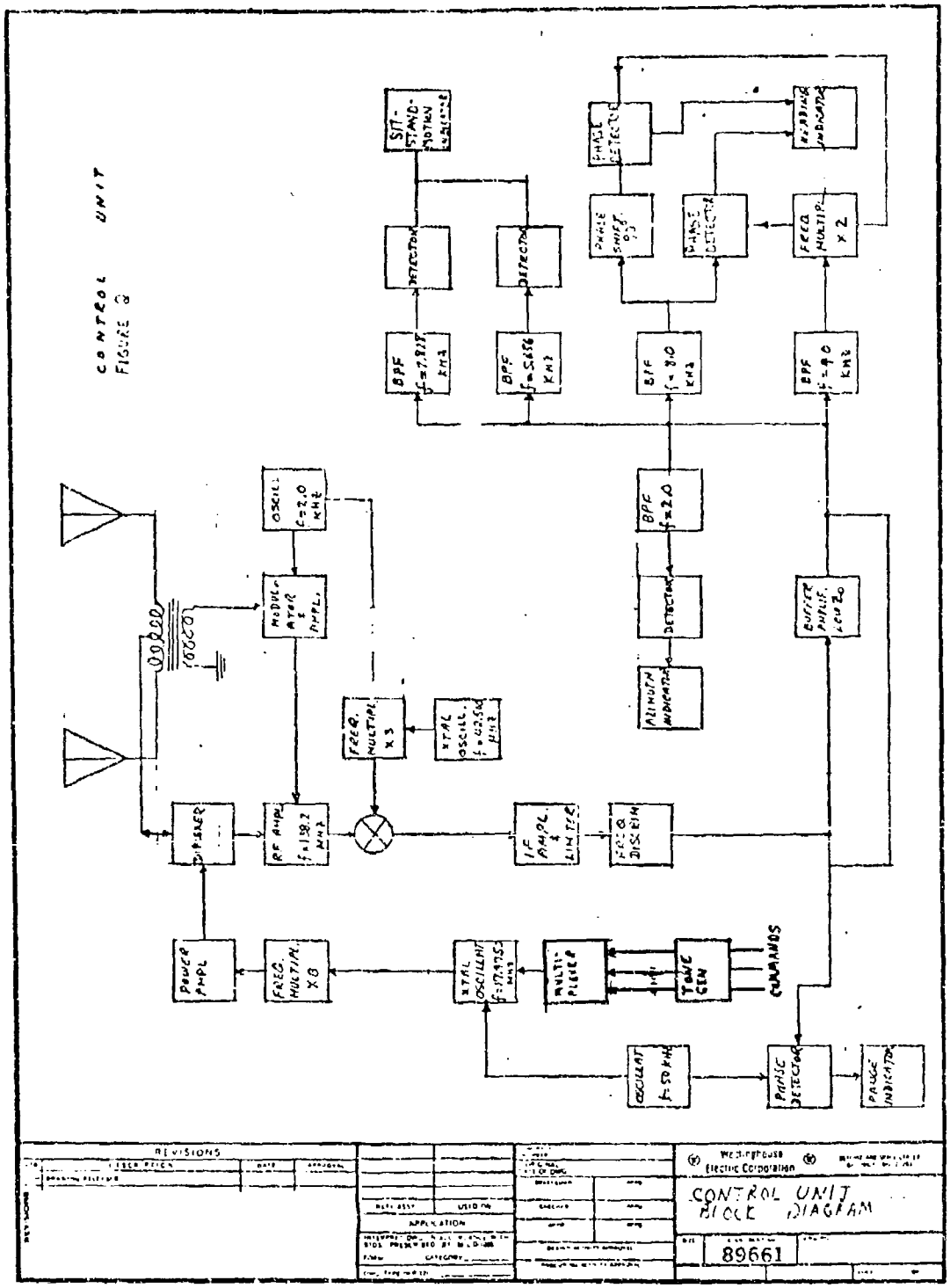


FIGURE 2 Control Unit

## 4.2 Control Unit Azimuth (Direction Finding)

Direction finding capability is provided in the control unit by the use of two antennas and a sum and difference transformer. The received signals from the two antennas go to a sum and difference transformer. The sum of the two received signals goes the normal route through the diplexer and RF receiver. The difference signal is filtered to remove the transmitter frequency and amplitude modulated by a 2 KHz signal, electrically phase shifted 90° with respect to the sum signal and then recombined with the sum signal. This processing converts the AM difference signal to an FM signal which can be processed by the receiver.

When the plane of the antennas is perpendicular to the received signal, the received signal strength in each antenna is equal and the difference signal is zero. As the plane of the antennas is moved away from perpendicular, the received signal strength in each antenna is no longer equal, and the difference signal is a quantity proportional to signal strength difference between the two antennas.

The difference signal is processed in the RF receiver as discussed above and the resulting output from the frequency discriminator produced by the difference signal is a 2.0 KHz signal proportional to signal strength difference. This composite signal from the frequency discriminator is filtered to remove the unwanted components from the 2.0 KHz signal and this 2.0 KHz component is detected. This detected output is used to drive the azimuth indicator meter. Therefore, a null on the azimuth indicator meter indicates the plane of the antennas is perpendicular to the remote unit.

4.3 Control Unit Range Processing

The composite signal from the frequency discriminator is amplified and sent directly to the range phase detector. The range phase detector will process the 50 KHz range signal and reject the remaining signals.

The incoming range signal is phase detected against the 50 KHz Control unit signal and the resulting output from the phase detector is a D.C. value proportional to the phase difference between the two 50 KHz signals. This D.C. quantity is used to drive the range meter and provide range information.

4.4 Control Unit Heading Indicator

Two signals are used to process the heading information. These two signals are the 4 KHz drive signal and the 8 KHz composite heading signal. The composite output from the frequency discriminator is filtered to remove the unwanted signals from the 8.0 KHz signal. This signal is split into two components and one of these components is electrically phase shifted 90° with respect to the other.

These two signals are phase detected against an 8 KHz square wave reference. This 8 KHz square wave reference is derived from the 4 KHz drive signal. The 4.0 KHz drive signal is separated from the composite frequency discriminator output by a narrowband filter. This 4.0 KHz signal is doubled in frequency and converted to a square wave to provide the 8 KHz square wave reference for the phase detector.

The outputs of the two phase detectors are two orthogonal components, east and north. These outputs are D.C. values whose magnitudes represent the sine and cosine of the two heading angles. These D.C. voltages are

used to drive two orthogonal coils in the heading readout device to give a 360° instantaneous indication of dog heading.

4.5 Control Unit Action Processing

Sit, stand, and motion indications were combined into a single readout meter to reduce the number of readouts which the operator must use.

Two signals are used to indicate the three necessary functions. A 2.8 KHz signal is used to indicate sit-stand and a 5.6 KHz signal is used to indicate motion. When the dog is sitting, the 2.8 KHz signal is not transmitted by the remote unit and the action meter will indicate the dog is sitting. When the dog is standing, the 2.8 KHz signal is transmitted by the remote unit. The received 2.8 KHz signal is separated from the composite signal by a narrow band filter and detected. This detected signal is weighted into the meter to indicate the dog is standing.

The 5.6 KHz signal is transmitted from the remote unit only when the dog is in motion. The received 5.6 KHz signal is separated from the composite signal by a narrow band filter and detected. This detected signal is weighted into the meter and summed with the stand indication signal to provide a motion indication.

4.6 Control Unit Control Tones

Three tones are used to control the dog:

(1) Change Direction - 400 Hz sawtooth

(2) Down Stay - 800 Hz tone keyed at 50 percent duty cycle at a rate of approximately 5 Hz

(3) Recall - 2000 Hz warbling tone

These three tones are activated by pushbuttons on the control unit. When activated by the pushbutton, the control tone is sent to the multiplexer for frequency modulation onto the transmitter.

## 5.0 SYSTEM IMPLEMENTATION

The design philosophy existing in the early stages of the contract involved maximum use of existing technology (compass an compass processing) and of commercially available transmitters and broad band receivers.

Several methods of two-way communication between the remote and control units were considered. The bandwidth necessary to process the 50 KHz ranging signal was far in excess of the bandwidth which can be achieved in commercial RF receivers. This bandwidth restriction therefore prohibited the use of pulse techniques. Time division multiplexing was also considered. However, it was felt that time division multiplexing would result in excessive complexity and would also adversely affect operational flexibility.

The diplex mode of operation was chosen as the least difficult path. This meant a low loss diplexer with 50 to 60 dB of isolation between the transmitter and receiver was necessary for proper operation. Also involved in this decision was the necessity of electrically isolating the receiver circuitry from the transmitter circuitry.

### 5.1 Receiver and Transmitter

Seven manufacturers of walkie-talkies were contacted in an effort to find the one most suited to this application. Two of the manufacturers

had no units which could be tuned to the 138 to 144 MHz band, two more manufacturers had units which required supply voltages in excess of 12 volts, and two manufacturers declined to quote. The remaining manufacturer, E. F. Johnson, was selected, therefore, primarily on the basis of its 12 volt compatible design.

The E. F. Johnson transceivers were purchased in pairs to communicate in one direction on 138.2 MHz and in the other direction on 143.8 MHz. These units were found to have a maximum range of 2 miles in the normal simplex mode.

Virtually all components of the E. F. Johnson transceiver were placed on one large printed circuit board. However, only the transmitter and the RF "front end" were useful. These two circuits were carefully cut away from the board for packaging in individual brass cans. As it turned out, the transmitter was designed for intermittent duty and consequently failed due to temperature rise when operated continuously. This problem was solved by heat sinking the last doubler and final amplifier to the brass box.

One reason for the severe temperature problem was the poor efficiency and relatively high power output of the transmitter. The transmitter has an RF output of 1.6 watts with a battery load of 6.3 watts (25% efficiency). With this arrangement battery life will be limited to slightly more than 4 hours, or half of the design goal.

Tests with the transmitter revealed that the bandwidth of the frequency modulation circuitry was not wide enough to properly modulate the 50 KHz ranging signal. This problem was finally solved by applying

the 50 KHz signal as phase modulation to the tuned circuit at the output of the first doubler.

To minimize the number of batteries necessary for each unit, it was decided to use two grounds in the system - one for the receiver and transmitter and one for the processing circuitry. With this scheme the necessary voltage could be achieved by the use of two six volt batteries. However, this scheme also meant that one ground would float with respect to the other. The decision was made to float the receiver and transmitter grounds within their brass cans. While the effect of this grounding scheme on performance was never determined, it is generally agreed that the floating ground should be placed in the low frequency circuits so that good grounding practice may be used in the critical high frequency circuits.

## 5.2 IF Strip

The original E. F. Johnson receiver used a double conversion scheme having a 10.7 MHz IF first IF and 455 KHz second IF. Neither amplifier had a bandwidth sufficient for this purpose. Consequently, a new IF amplifier was designed using standard FM IF transformers and an integrated circuit amplifier limiter.

The amplifier limiter has a maximum gain of 80 dB and, therefore, precautions were taken with the circuit layout to prevent instability. The gain of the RF receiver and the IF transformers was lower than anticipated and the full 80 dB gain of the amplifier-limiter was utilized for low level signals. Even with all the precautions taken in the layout,

the device proved to be slightly unstable with low level oscillations during high gain conditions. Therefore, the receiver sensitivity is degraded.although the extent of the degradation is not fully known.

5.3. Processing Circuitry

The processing circuitry was implemented using available technology where possible with two goals in mind - minimum components and low power dissipation. Compass technology has been developed on other LWL programs such as the PSN-7 and LAVNAVS. This technology was applied to the compass used on this program.

The remaining processing circuitry was implemented using processing techniques which would meet the design goals. Due to the low frequencies involved in the processing circuitry, the problems which were encountered were not as complex as those at high frequencies and were therefore solved more easily.

5.4. Mechanical Fabrication

The remote units were designed and fabricated with one main philosophy - small size and low weight. This objective was achieved but with some sacrifice in system maintainability. This meant that circuit modifications and adjustments which are necessary in any brass-board system were more difficult than is desirable.

## 6.0 RECOMMENDATIONS

Field tests with the remote and control unit have shown there are several areas which need improvements in the present units.

## 6.1 Mechanical Design

In the present design the high frequency circuit grounds are negative with respect to the shields enclosing the circuits. These grounds are bypassed to the system of shields within each shield can. At high frequencies the dc and ac grounds should be the same. Floating of grounds can be far better tolerated at processing frequencies where bypass capacitors become nearly ideal components.

Figures 3 and 4 show an improved mechanical design which satisfies the high frequency grounding requirement and also provides easier access to the components for modification and adjustment. Figure 3 is a suggested configuration for the compass assembly (remote unit). This unit consists of the compass and two 3 x 4 inch printed circuit boards. The boards are attached to rectangular wells with one well on each side of a central frame plate. Components are placed within the wells while circuit interconnections are made by subminiature connectors and/or in-line pins on the printed circuit boards. Ground connections are enhanced by ground plane connection through the mounting screws. A cable access hole in the frame plate allows cabling between sides and also to the harness between remote assemblies. All adjustment potentiometers should be placed so that the slotted screws are accessible with the printed circuit boards in place.

Figure 4 is a suggested configuration for the transceiver assembly (remote unt). In this case a full length frame plate with a cable access hole divides the unit vertically. A single large well on the battery

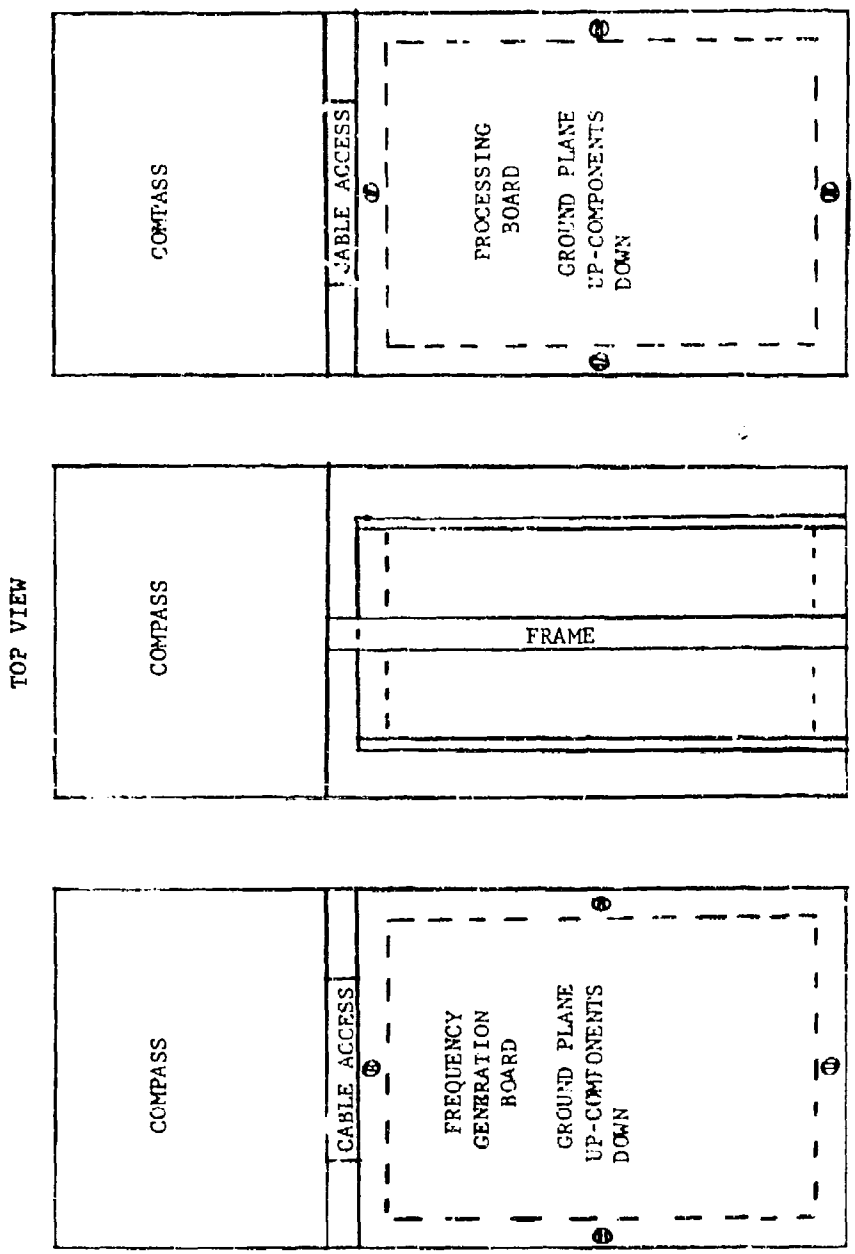


FIGURE 3 REMOTE UNIT COMPASS ASSEMBLY

TOP VIEW

WESTINGHOUSE ELECTRIC CORPORATION

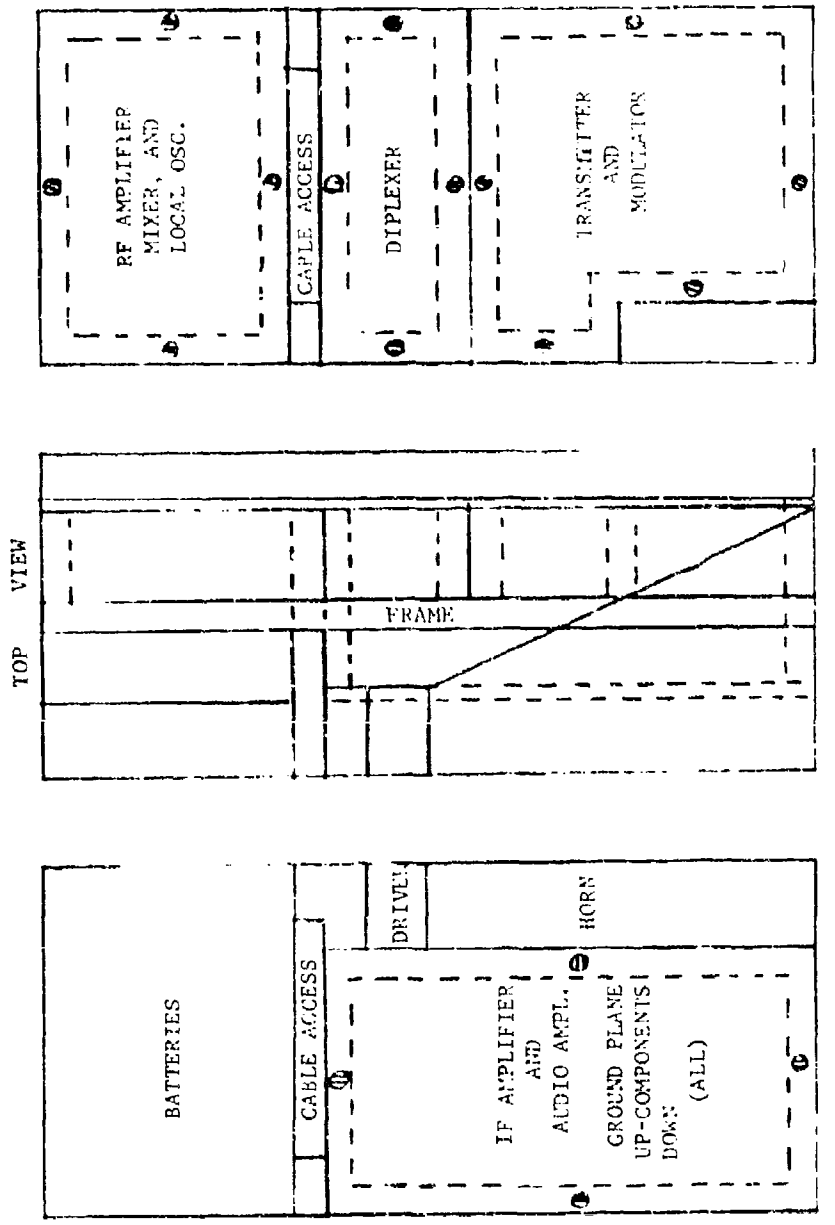


FIGURE 4 REMOTE UNIT
TRANSCEIVER ASSEMBLY

side contains the IF amplifier and audio circuitry. The IF transformers are placed outside the well on the ground plane side to allow convenient adjustment. This well, therefore, will be necessarily shallow. The remaining circuitry is placed in three wells located on the other side of the frame plate. Signal interconnections are by means of subminiature connectors and in line pins as before. In all these high frequency circuits a maximum ground plane is to be retained on the outside surface of the printed board. Multiple grounding connections by the mounting screws are to be relied upon for low impedance ground at signal frequencies.

The application of this design to the command unit is not illustrated. However, the more generous proportions provide ample flexibility in applying similar construction techniques.

The high frequency circuits of the transceiver, particularly, require isolation for successful diplex operation. Components of the transmitter, receiver, diplexer, and also the IF strip are placed within wells and are shielded by a "maximum" ground on the outside surface of the printed board. Should this prove insufficient, it would seem that a simple cover over the RF boards would produce sufficient isolation providing, of course, that the power supply decoupling is not the limitation.

## 6.2 Transmitter

Two options exist for the redesign of the transmitter. First, the existing transmitter layout can be duplicated on a full rectangular board which can then be anchored to the well by its edges. In this case components can be removed from an existing transmitter, thus minimizing

the redesign effort. Alternatively, the entire transmitter can be redesigned for construction preferably on an aluminum plate. The disadvantage of the first option is that the transmitter retains its low efficiency (25%), which is a real burden on the batteries. The second option will, of course, add to the cost. An added factor to be considered is that the existing transmitter generates spurious signals unless it is in perfect adjustment.

6.3 RF Amplifier

The same two choices exist for the receiver as for the transmitter. The benefits to be derived from a complete redesign are improved shielding from an aluminum chassis and simplification of the local oscillator circuitry.

6.4 IF Amplifier

The IF amplifier in its present form suffers from insufficient gain. A single transistorized gain stage preceding the highly sensitive amplifier limiter should provide the required overall gain. At the present time the knee of the limiting curve is reached with a 5 $\mu$ volt input signal. A 20 dB increase in IF gain will allow maximum performance compatibility with the IF bandwidth.

Crystal filters in the IF amplifier were intended to reduce the IF noise bandwidth without affecting gain for the 50 KHz ranging sidebands. Proper filter operation was never confirmed and the filter was subsequently removed from the IF strip. With the additional gain, the crystal filter operation could be confirmed. The reduced noise bandwidth is intended to increase the maximum range by 70%.

## 6.5 Direction Finding

The direction finding operates on the basis of an RF null in the antenna system. A simplification is suggested in which the two quarter wave poles normally operate in phase to provide an essentially omni-directional horizontal pattern. Accordingly, for direction finding, a momentary switch is pressed which connects the antennas in phase opposition. This causes the antenna system to have a sharp null to the front and rear. The null is sensed by a signal strength meter incorporated in the IF amplifier circuit. Other functions of the equipment are impaired only while direction finding is in progress.

Details of the method are shown by Figure 5. The reflective switching technique employing the quadrature hybrid will produce either 90° or 270° input-output phase difference. The fixed 90° error can be compensated by an extra quarter wavelength of cable on the unswitched side.

## 6.6 Range

Operation of the ranging function was impaired by changes in signal delay (modulation phase shift) with supply voltage. This effect was greater in the command transmitter than in the remote unit. The effect is, of course, attributable to those parts of the transceiver on unregulated voltage. The affected stages are the last two doubler stages and the final. The delay contribution of the first doubler stage is magnified 2X by the second doubler stage.

improved efficiency in the low level transmitter stages, a goal which has already been stated for the transmitter as a whole. We feel that the transmitter final stage contributes little delay variation because of it's greater bandwidth.

The remote and control units successfully communicated with each other over a range of approximately 300 meters. The remote unit received and processed the control signals, producing the three desired command tones, and the control unit received the sit, stand, and motion signals and displayed them correctly.

The heading indicator was demonstrated to operate correctly in the laboratory, but when the case was closed for the field demonstration, the indicator ceased to operate. This is apparently a minor problem which can be easily remedied.

The range indicator operated in the laboratory, but would not remain calibrated because the phase of the transmitted signal changes as the battery voltage decreases with time. In order to stabilize the range measurement, it appears necessary to control the voltage on the last two doubler stages of the transmitter with a voltage regulator.

The direction finding function has not been demonstrated in the finished system, although the direction finding modulator operates as a separate unit.

We feel that the design changes described in the previous section should be made in order to improve the performance and the serviceability of the system. When these changes are implemented, all of the performance goals can be met.

## APPENDIX

This section contains the schematics and wiring diagram for the Electronic Dog Handler System.

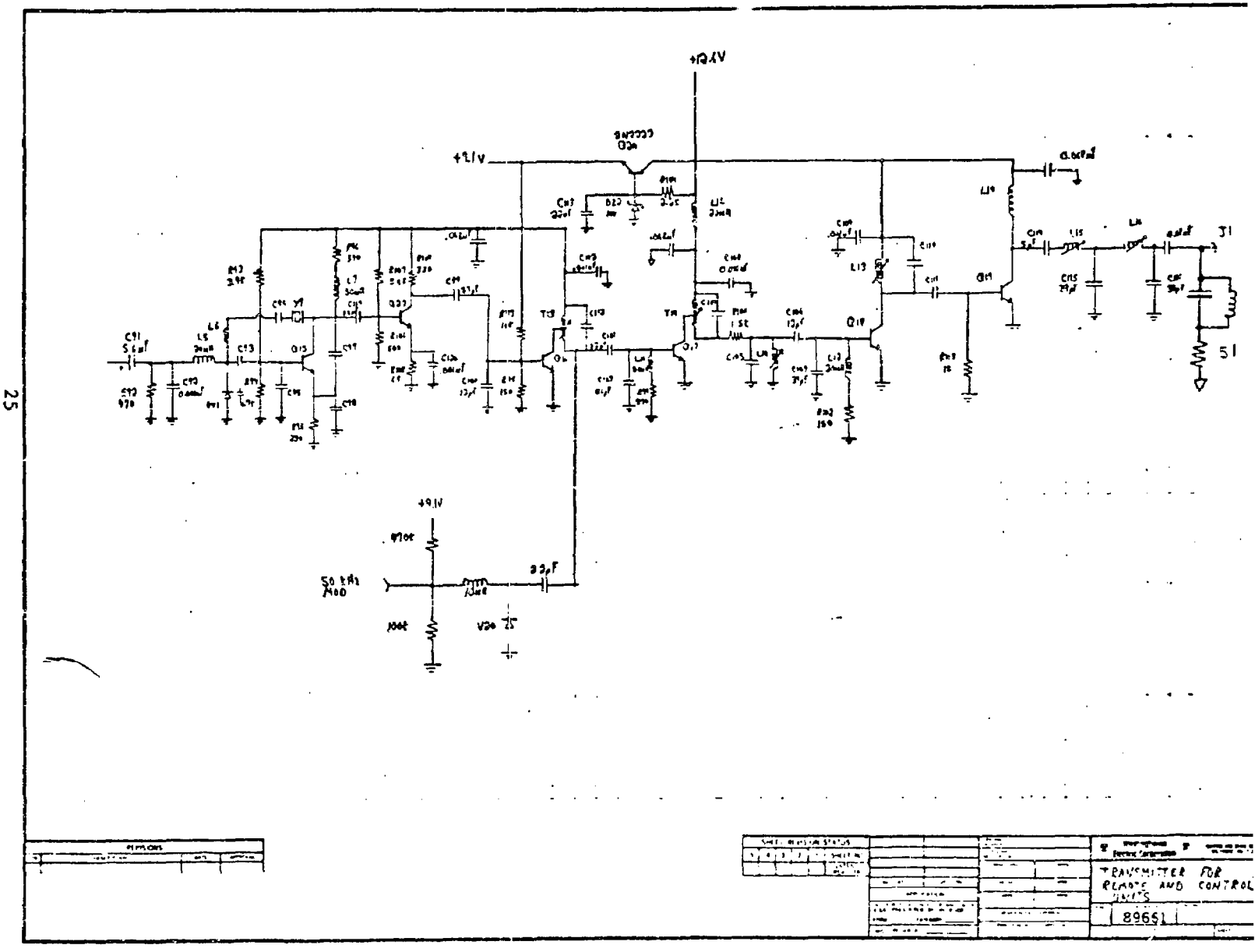
TRANSMITTER FOR
REMOTE AND CONTROL
UNITS
89651

SKETCH SHEET
Form 34599

WESTINGHOUSE ELECTRIC CORPORATION

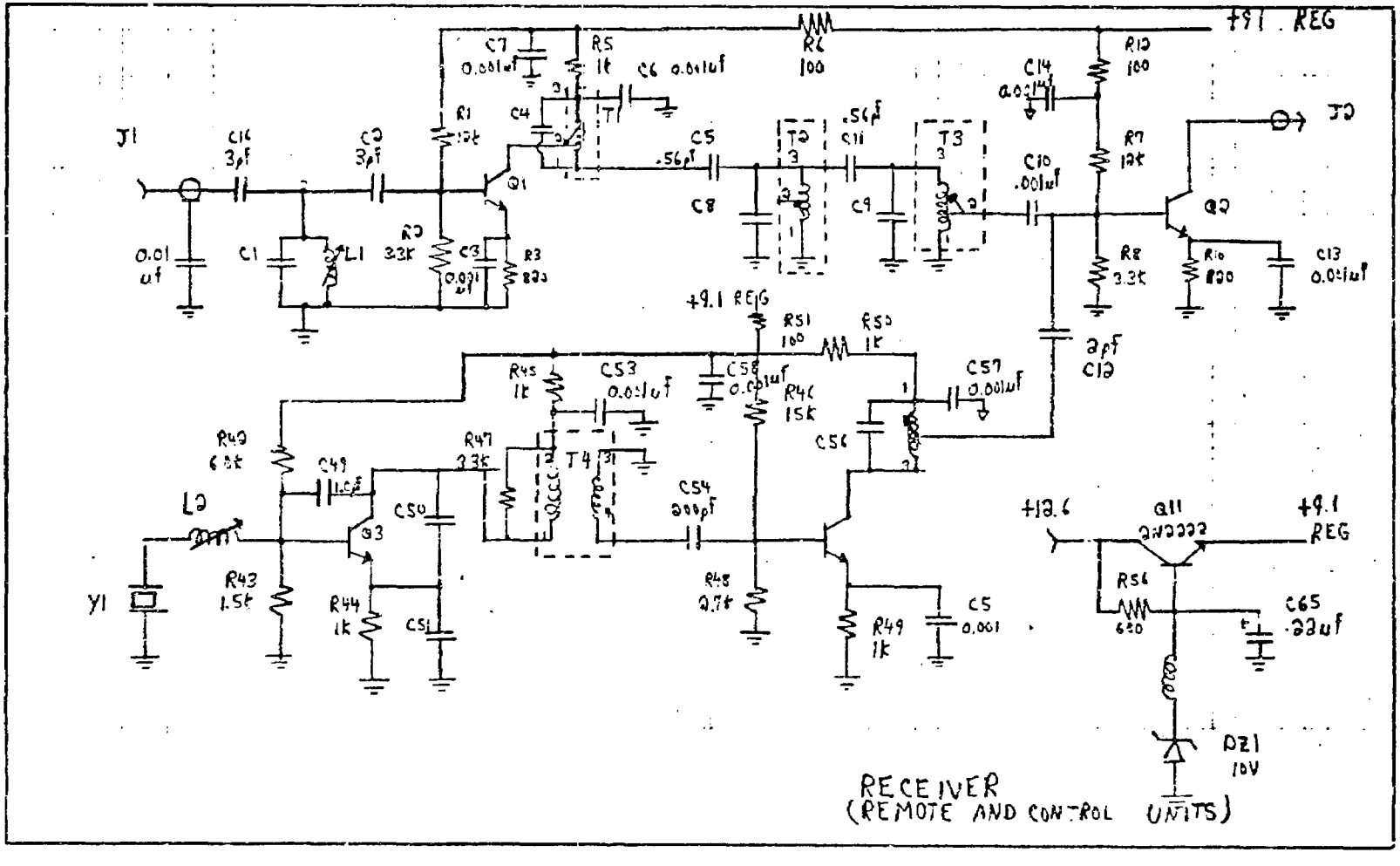

SKETCH SHEET

WESTINGHOUSE ELECTRIC CORPORATION

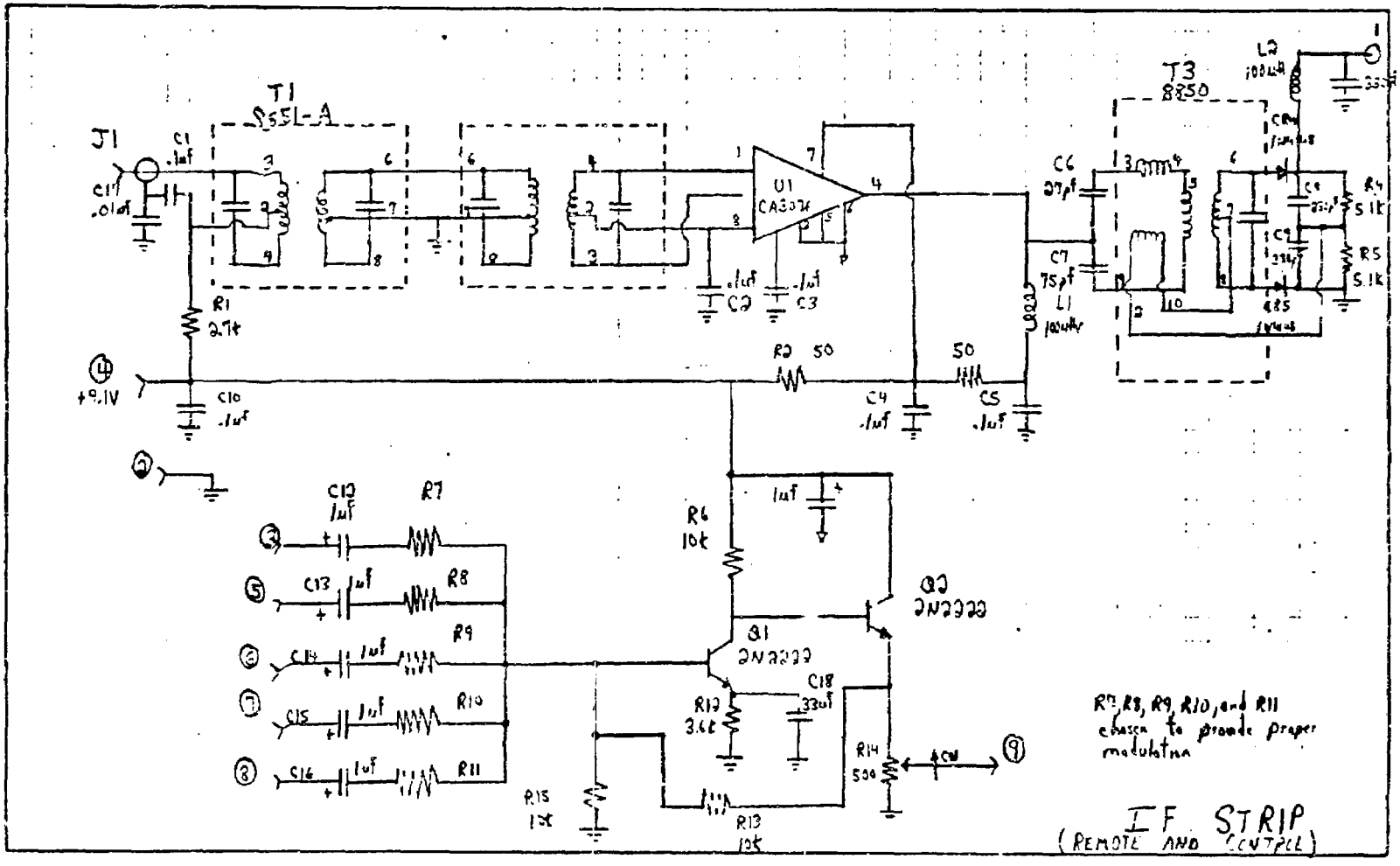

SKETCH SHEET

WESTINGHOUSE ELECTRIC CORPORATION

CONTROL UNIT DIPLEXER

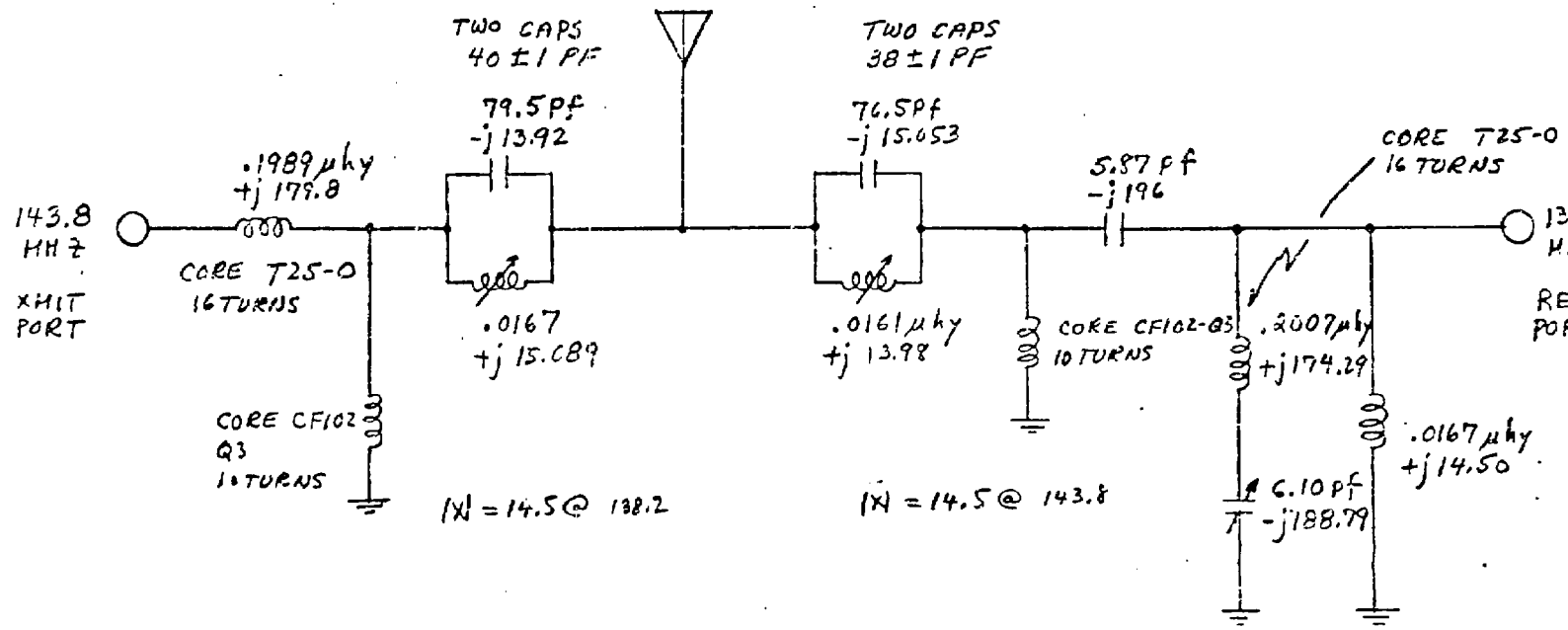


T25-0 16 TURNS RESONATES WITH 6 PF @ 141 MHZ
CF102-Q3 10 TURNS RESONATES WITH 3 PF @ 141 MHZ

WIRE GLASS COVERED # 30

SKETCH SHEET

WESTINGHOUSE ELECTRIC CORPORATION

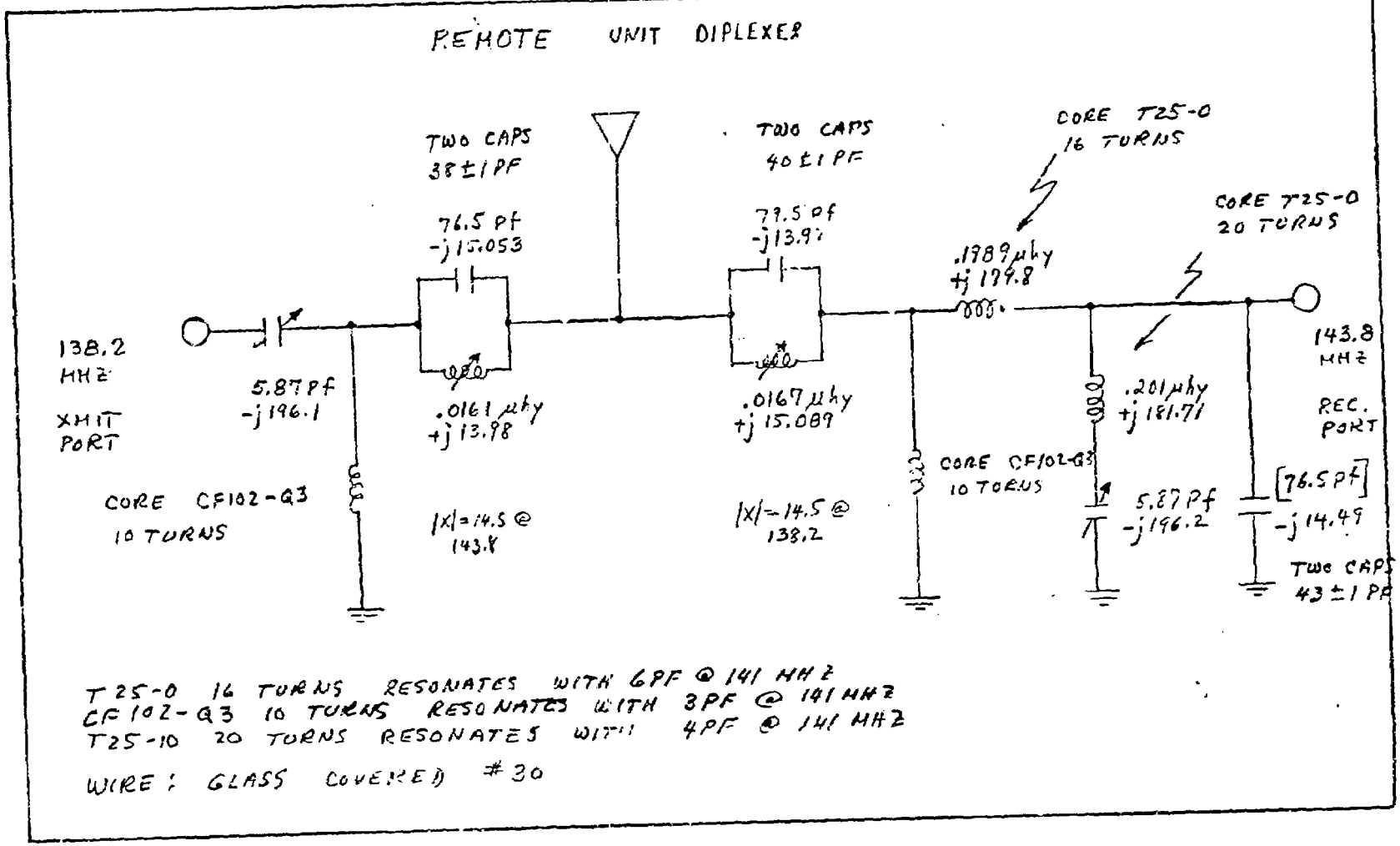


T 25-0 16 TURNS RESONATES WITH 6PF @ 141 MHZ
CF 102-Q3 10 TURNS RESONATES WITH 3PF @ 141 MHZ
T25-10 20 TURNS RESONATES WITH 4PF @ 141 MHZ

WIRE: GLASS COVERED #30

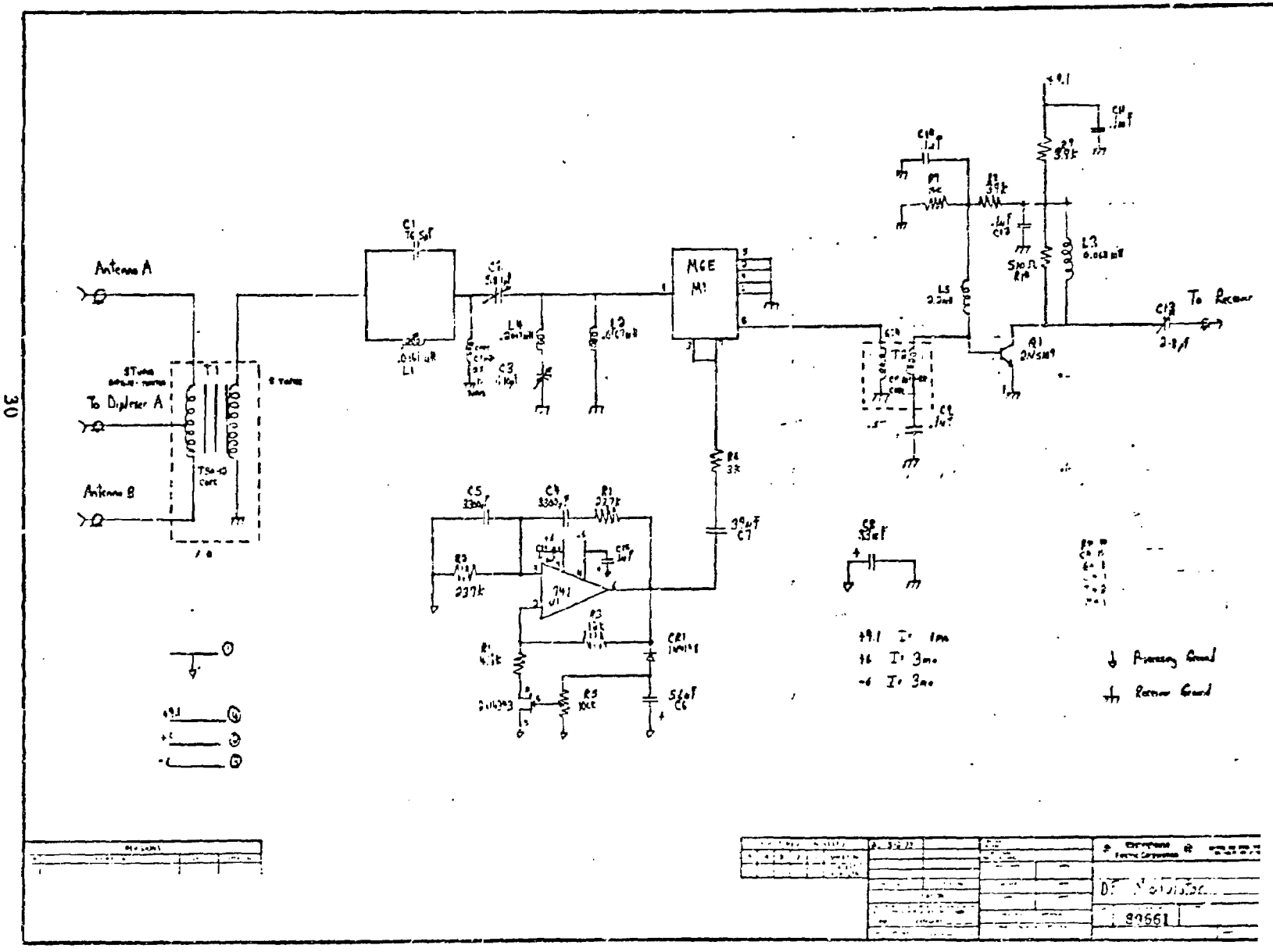
Antenna A
To Diplexer A
Antenna B
T1
T50-0 core
C1
L1
C2
L4
L2
C3
MGE
M1
R4
3k
C7
C5
C4
R1
237k
R2
237k
741
R3
CR1
R5
100k
C6
R6
510Ω
L3
L5
T2
C12
R7
R8
C13
Q1
2N5087
To Receiver
+9.1 I= 1ma
+6 I= 3ma
-6 I= 3ma
Primary Ground
Receiver Ground
89661

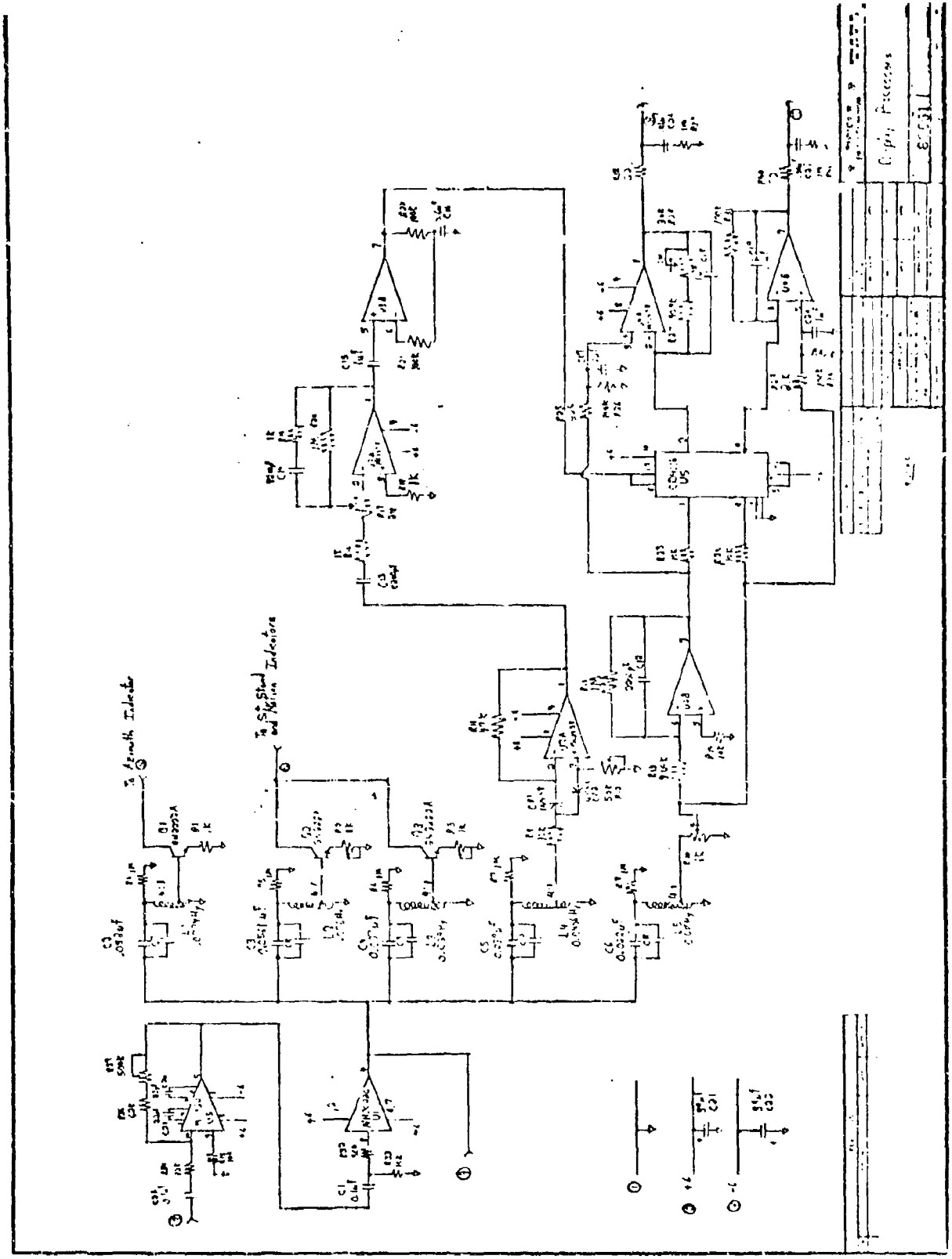

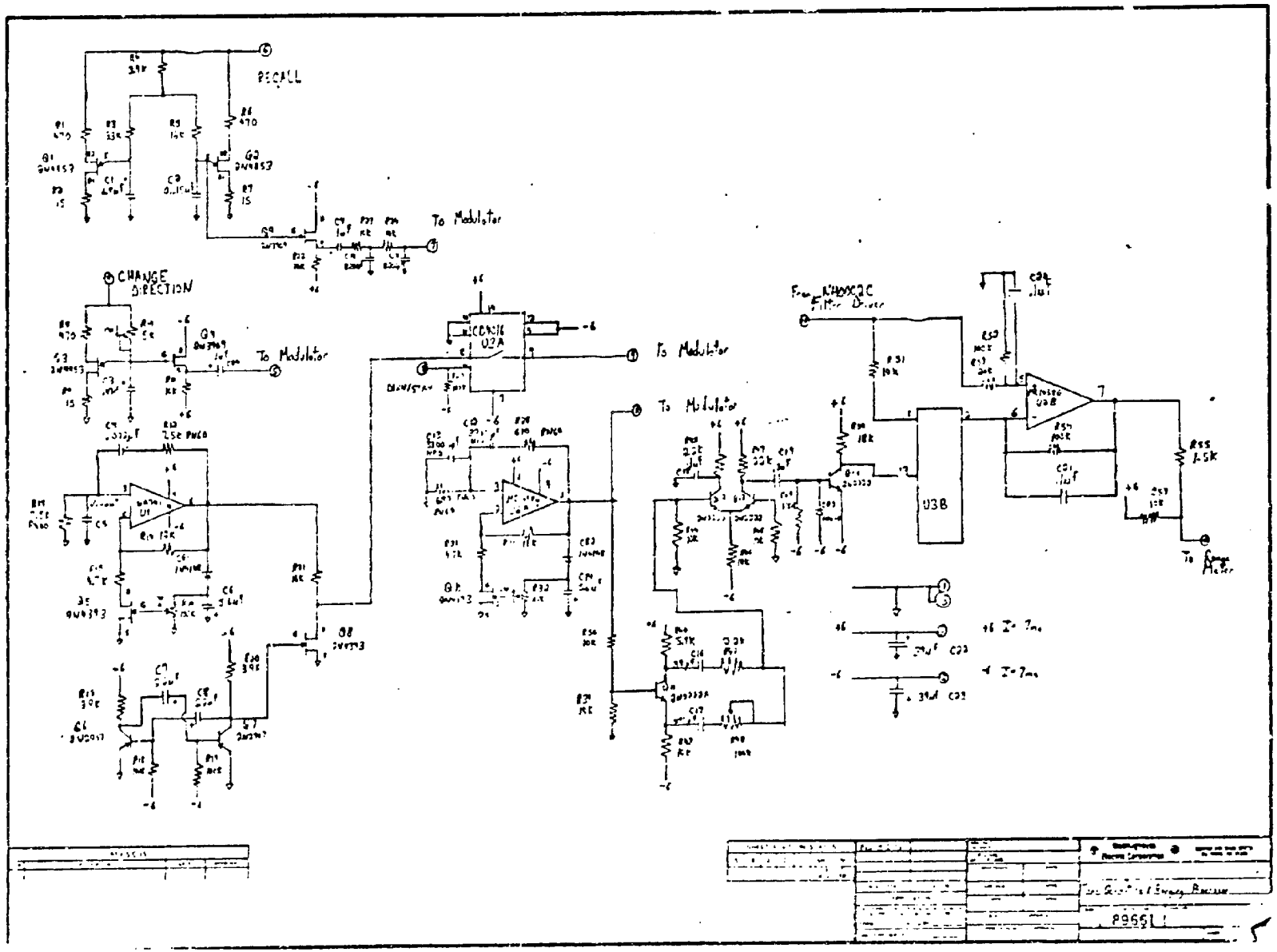
RECALL
To Modulator
CHANGE DIRECTION
To Modulator
To Modulator
To Modulator
U3B
+6 I = 7ma
-6 I = 7ma

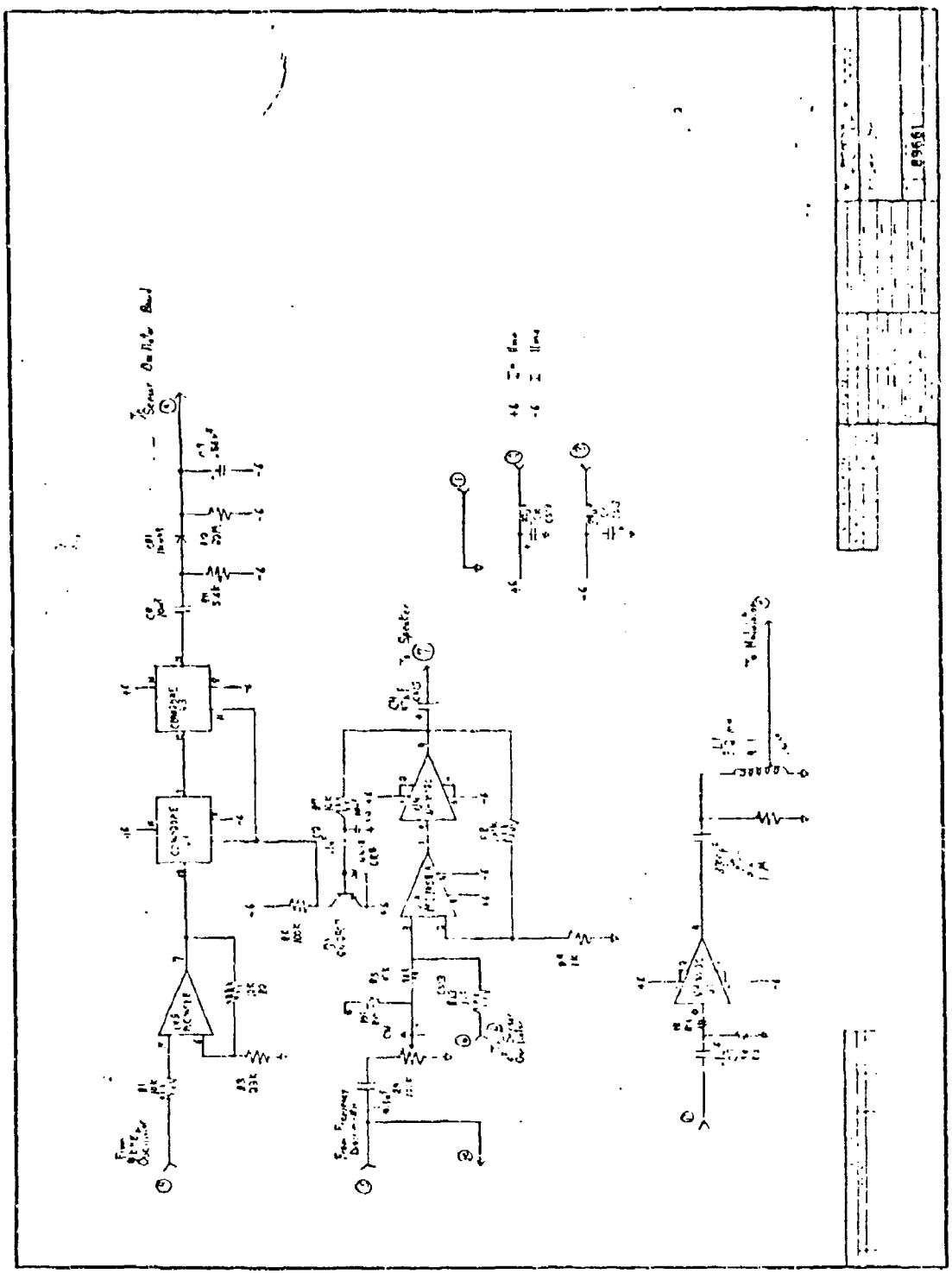

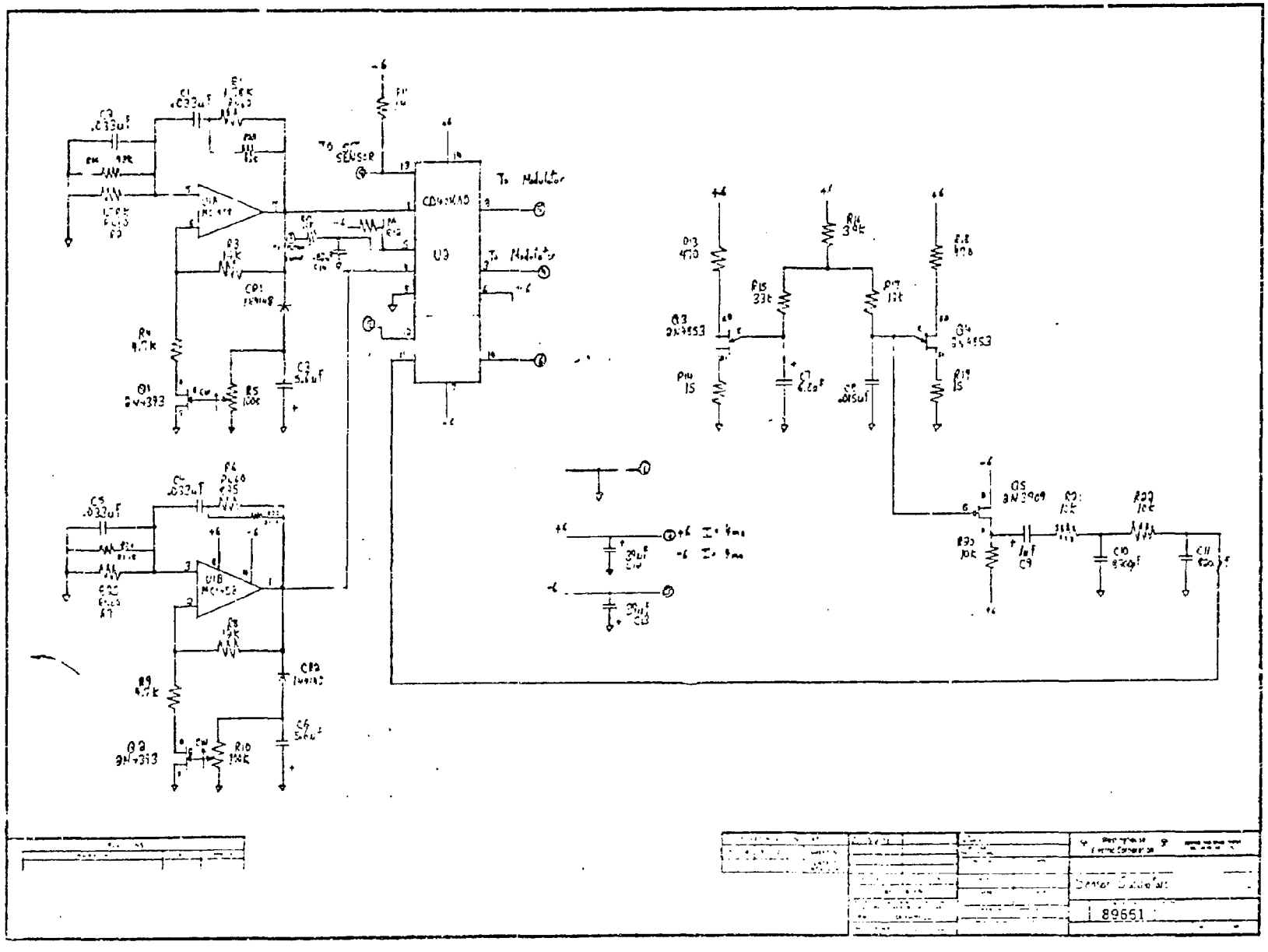
To SENSOR
To Modulator
To Modulator
U9
Q5
2N2909
Sensor Schematic
89661

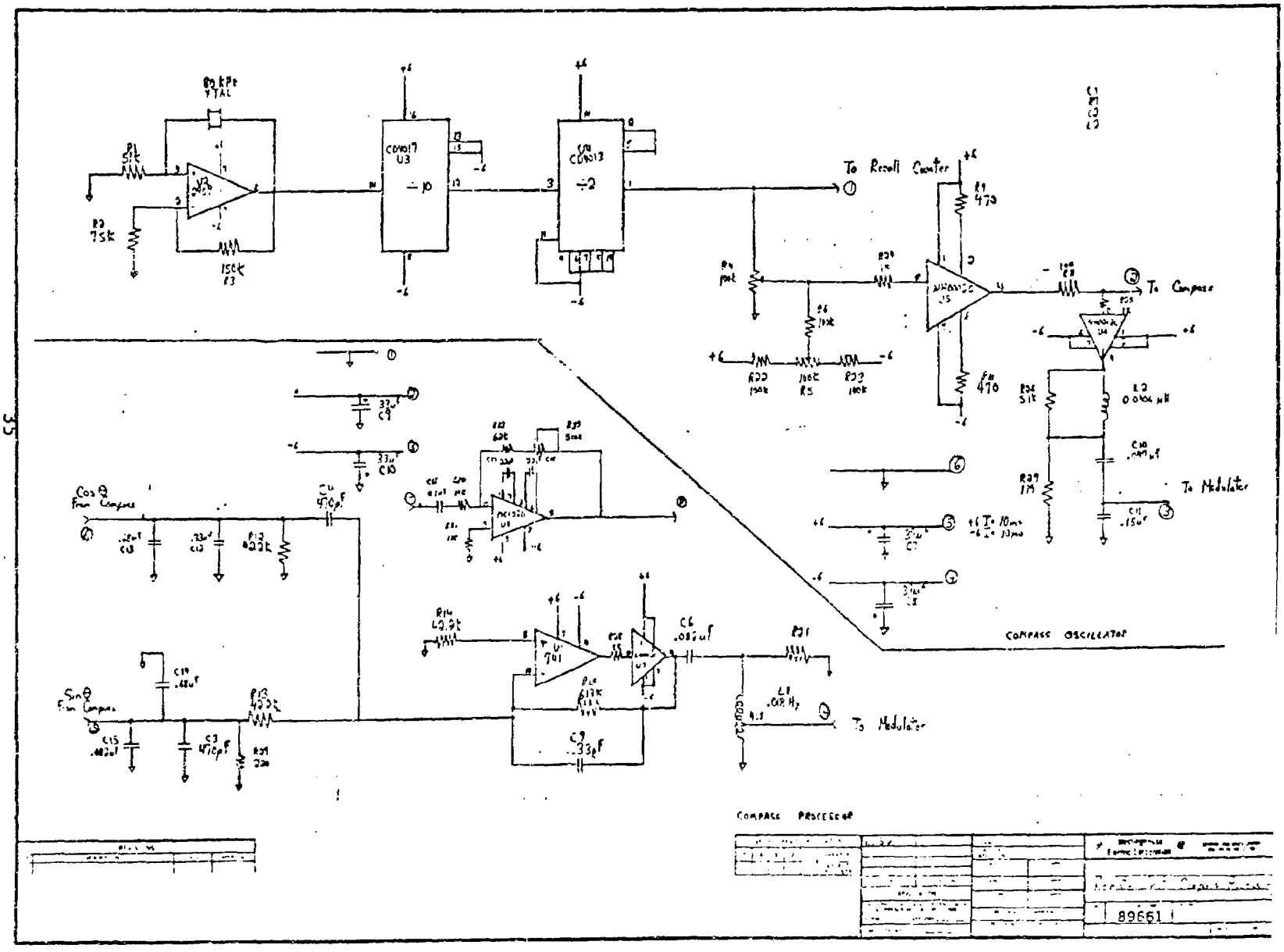
To Resolt Counter
To Compass
To Modulator
COMPASS OSCILLATOR
COMPASS PROCESSOR
Cos θ From Compass
Sin θ From Compass
To Modulator
89661

# CONTROL UNIT WIRING DIAGRAM

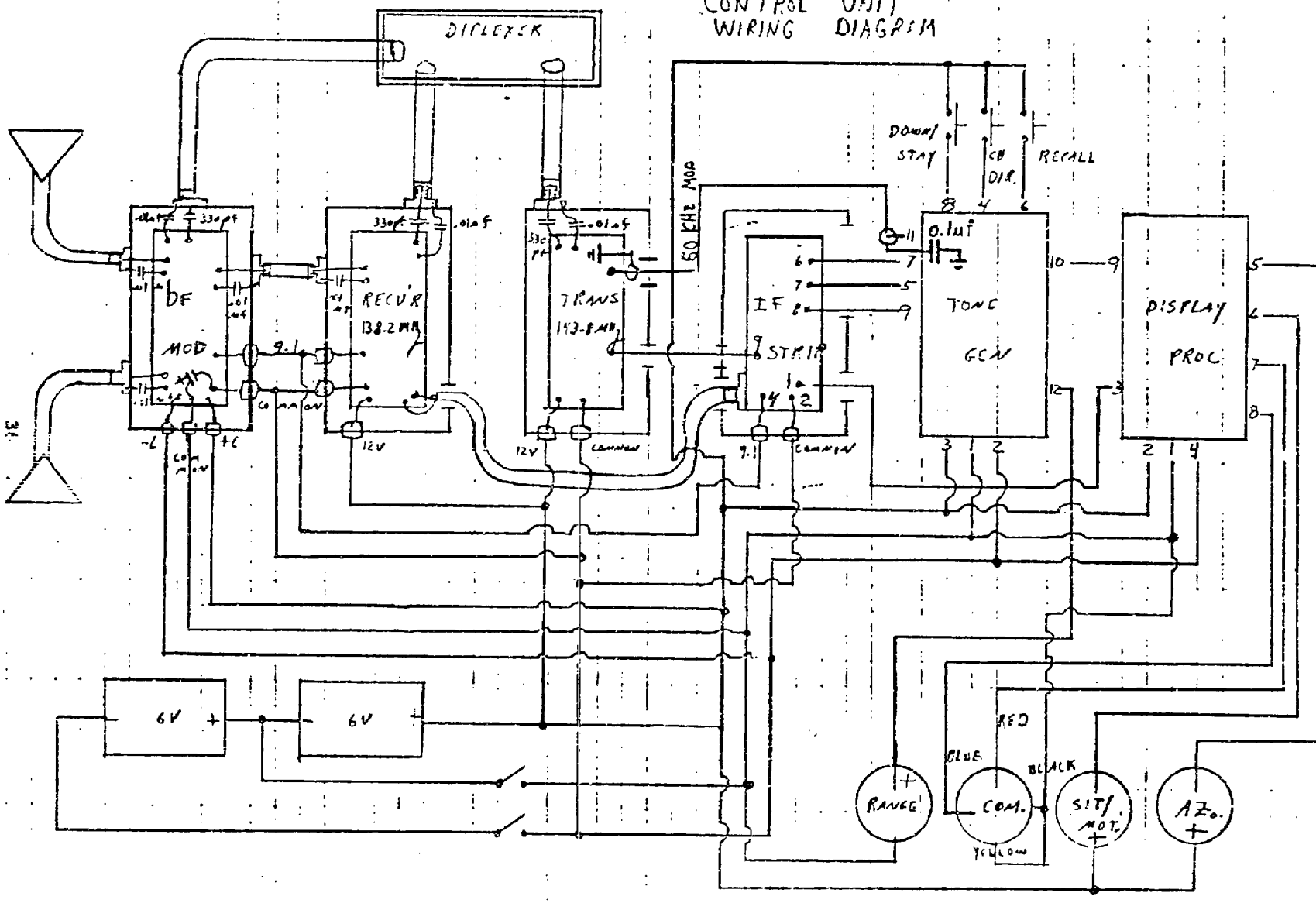


10/20/72

REMOTE UNIT TRANSCEIVER
WIRING DIAGRAM

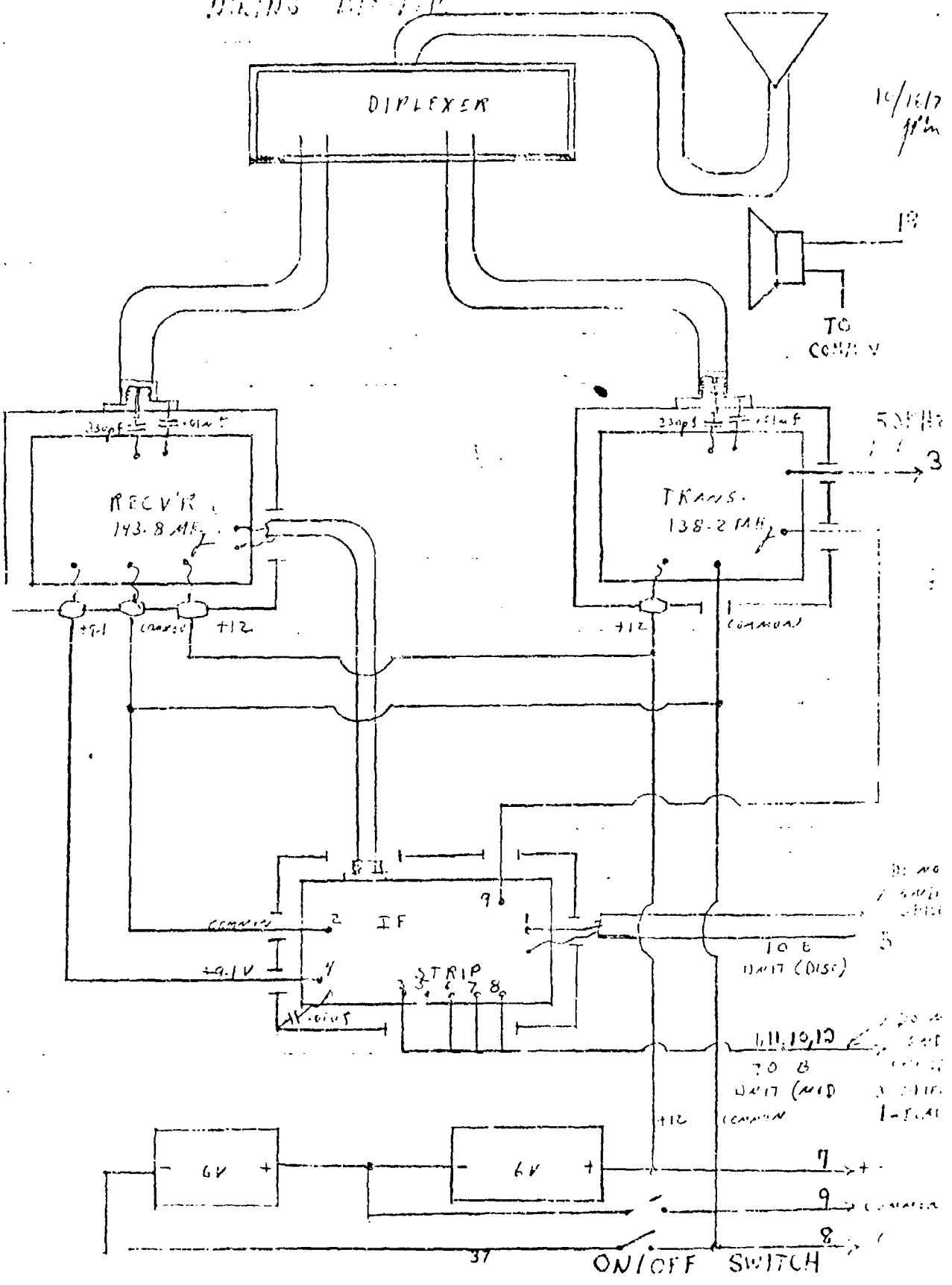
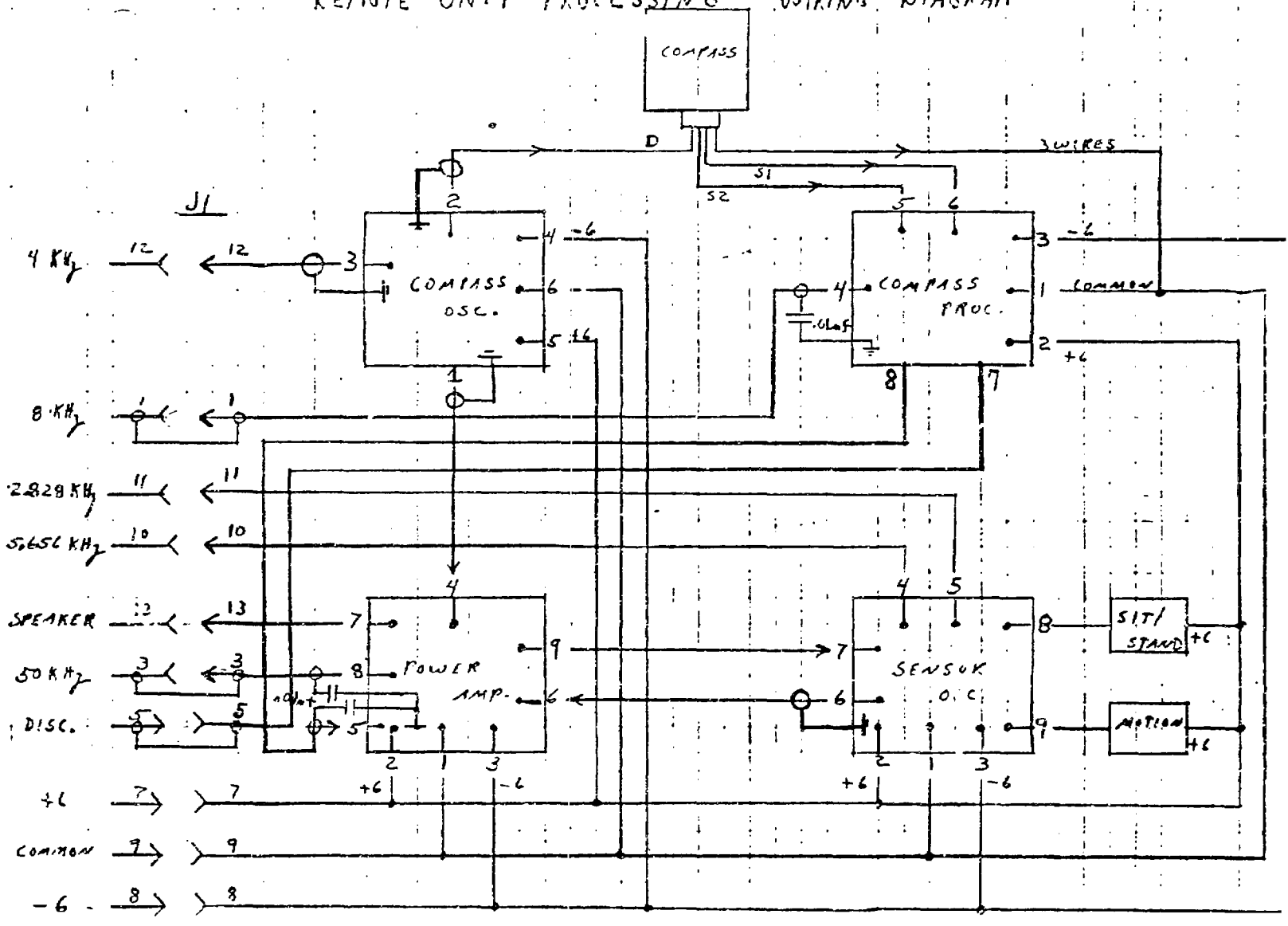
# REMOTE UNIT PROCESSING WIRING DIAGRAM