AD-761 665

MINIATURE, REMOTELY CONTROLLED LAND AND WATER VEHICLES

W. S. Pope, et al

Battelle Columbus Laboratories
Columbus, Ohio

July 1972

DISTRIBUTED BY:

NTIS

National Technical Information Service
U. S. DEPARTMENT OF COMMERCE
5285 Port Royal Road, Springfield Va. 22151

BEST
AVAILABLE COPY

AD 761665

MINIATURE, REMOTELY CONTROLLED
LAND AND WATER VEHICLES
(Report No. A-3963)

by

W. S. Pope, D. C. Doerschuk,
and J. M. Tierney

TACTEC

NATIONAL TECHNICAL
INFORMATION SERVICE

Battelle
Columbus Laboratories

D D C
RECEIVED
MAY 25 1971
B

DISTRIBUTION STATEMENT A
Approved for public release;
Distribution Unlimited

MINIATURE, REMOTELY CONTROLLED LAND AND WATER VEHICLES
(Report No. A-3963)

by

W. S. Pope, D. C. Doerschuk,
and J. M. Tierney

Sponsored by

DEFENSE ADVANCED RESEARCH PROJECTS AGENCY
Tactical Technology Office
(Contract No. F33657-71-C-0893,
ARPA Order No. 1541, Amendment 1)

July 1972

BATTELLE
Columbus Laboratories
Tactical Technology Center
505 King Avenue
Columbus, Ohio 43201

DDC
RECEIVED
MAY 25 1973
B

DISTRIBUTION STATEMENT A
Approved for public release;
Distribution Unlimited

FOREWORD

This study was supported by the Defense Advanced Research Projects Agency (ARPA) of the Department of Defense and was monitored by Wright-Patterson Air Force Base under Contract No. F33657-71-C-0893. Dr. C. H. Church and Colonel L. P. Monahan, of the Tactical Technology Office of ARPA, were the technical monitors for this effort.

Battelle is not engaged in research for advertising, sales, production, or publicity purposes, and this report may not be reproduced in full or in part for such purposes. The use of trade names or manufacturers' names in this report does not constitute endorsement of any commercial product.

DISCLAIMER

The views and conclusions contained in this document are those of the authors and should not necessarily be interpreted as representing the official policies, either expressed or implied, of the Defense Advanced Research Projects Agency or the U. S. Government.

TABLE OF CONTENTS

	Page
INTRODUCTION	1
SUMMARY	2
TECHNICAL ASSESSMENT	4
All-Terrain Vehicles	4
Land Vehicles	6
Water Vehicles	9
Amphibious Vehicles	12
CONFERENCE	13
CONCLUSIONS AND RECOMMENDATIONS	14
APPENDIX A: INDIVIDUALS AND FACILITIES CONTACTED, REFERENCES, BIBLIOGRAPHY, AND LIST OF U. S. PATENTS	A-1
APPENDIX B: MISSION ANALYSIS	B-1
APPENDIX C: CONCEPT SKETCHES	C-1
APPENDIX D: TABULAR SUMMARY OF VEHICLE AND COMPONENT CHARACTERISTICS	D-1
APPENDIX E: TERRAIN AND WEATHER INFLUENCE ON MOBILITY	E-1
APPENDIX F: HIGHLIGHTS OF CONFERENCE ON MINIATURE, REMOTELY CONTROLLED LAND AND WATER VEHICLES	F-1

MINIATURE, REMOTELY CONTROLLED LAND AND WATER VEHICLES

by

W. S. Pope, D. C. Doerschuk,
and J. M. Tierney

INTRODUCTION

At the request of Dr. Charles H. Church of the Tactical Technology Office, Defense Advanced Research Projects Agency (ARPA), Battelle's Tactical Technology Center (TACTEC) initiated a state-of-the-art survey and technical assessment of miniature, remotely controlled (R/C) land and water vehicles in March, 1972. The project was defined and established within the framework of an existing ARPA contract with Battelle-Columbus for analytic support.

Concept of the Investigation

Surveillance, reconnaissance, ambush, decoy, suppression of fire, minefield penetration - all are functions which military personnel might be called upon to perform. But with the tremendous drive toward mechanization which has characterized the U. S. defense effort in recent decades, it is logical to ask, "Why shouldn't these and similar functions be performed by machines?" If we could guide the motions of such machines and receive adequate intelligence from them, the saving in lives would be well worth the developmental investment. Before such developmental programs are launched, it is well to ascertain: (1) the general state of the art of such technology as could be applied to the construction of these machines, (2) the individuals and organizations who have had experience with such devices, and (3) which, if any, of the existing machines described in item (1) could be used in the field "as is" or with a reasonable amount of modification? Answers to these questions will provide the evaluating Government agency with background information for directing the course of future research and development. This report addresses these questions.*

---

* A report on another ARPA task conducted by TACTEC contains considerable information of interest concerning guidance and remote control components. Issued in August, 1972, the report (No. A-3997) is entitled "Technical Assessment of Remotely Controlled Miniature Aircraft and Accessories".

Program Objectives

The objectives of the program were to:

(1) Conduct a survey of existing, developmental, and conceptual miniature, R/C land and water vehicles and their associated components

(2) Perform a technical assessment of the vehicles identified in the survey to assist interested agencies in determining which vehicles are potentially useful for their specific missions, and what actions might be necessary to modify an existing vehicle to perform as required.

SUMMARY

State-of-the-Art Survey

The state-of-the-art survey for this study was initiated with searches of the Battelle Technical and Foreign Science Libraries, the Defense Documentation Center, the Scientific and Technical Facility of the National Aeronautics and Space Administration, the TACTEC files, the DEIC (Diver Equipment Information Center) files, and U. S. patents. These searches provided the seeds for further productive effort by identifying individuals and facilities who could be contacted for additional information. Most of the contacts were made by telephone, and the requested information was mailed to Battelle. A summary of all facilities and individuals contacted, as well as a list of references, patents, and bibliography resulting from the various searches, is presented in Appendix A of this volume.

Initially, the survey was directed toward obtaining specifications for complete, miniature, remotely controlled vehicles, but as more and more information was gathered it became apparent that there simply are not many such vehicles in existence, and that imposing such a limitation would result in inadequate, meaningless data. Accordingly, since the advanced state of remote-control technology would make it relatively easy to install appropriate remote-control equipment in small vehicles, emphasis was shifted to gathering information on those vehicles which could conceivably be adapted to remote control and on components which could be employed on them.

Technical Assessment

This report includes a technical assessment of selected vehicles and systems; a summary of the results of a conference on miniature, remotely

controlled vehicles held at Battelle, and conclusions and recommendations with respect to miniature-vehicle technology.

Only those vehicles which could be most effectively employed in the field "as is" or with minor modification are discussed in the technical assessment. For the assessment a number of typical mission profiles were developed (see Appendix B) and the capabilities of the selected vehicles were evaluated against these.

During the course of this study and during the conference, a number of concepts for small tactical vehicles were generated. Rough sketches of some of these concepts are included in Appendix C. The intent here is to help crystallize some of the descriptive information presented in the body of the report and to suggest more possibilities for remotely controlled tactical vehicles.

The results of the survey are presented in tabular form in Appendix D. Material surveyed included manufacturers' brochures; letters from Government and industry; books, periodicals, journals, patents, reports, and magazines; photographs; technical drawings; and specification sheets. Data amenable to reduction to tabular form were selected from the material received, and are presented as tables in Appendix D under two basic categories: vehicles and components.

Four types of vehicles are considered: all-terrain vehicles, land vehicles, water vehicles, and air-cushion vehicles. The vehicles included represent a wide variety of sizes, weights, and configurations; some are remotely controlled, some are not. Some of the vehicles have been designed and used in tactical military situations; however, the majority of the vehicles were developed strictly for civilian use. The latter serve to illustrate the range of vehicles and capabilities currently available and to provide a stimulus for the generation of ideas for adapting, modifying, or developing novel concepts for miniature, remotely controlled, tactical vehicles.

Components are divided into three basic areas: power sources, drive trains, and guidance and control systems. The components represented in Appendix D are those which the investigators believe could be used "as is" or successfully adapted for use in small tactical vehicles. As indicated, the components are organized by function; no effort has been made to assemble them into complete systems.

TECHNICAL ASSESSMENT

This section of the report contains a series of brief discussions of the ability of selected vehicles to perform missions outlined in Appendix B. The vehicles are treated in the order in which they appear in Appendix D, although every vehicle is not discussed. It is suggested that the description of the vehicle presented in Appendix D be read before the technical assessment is reviewed.

The vehicles assessed here were chosen for one of the following reasons:

- Immediately applicable to one or more of the missions described in Appendix B
- Capable of being converted or modified to fulfill a specified mission
- Illustrate a concept which could be developed into tactical hardware
- Typify a number of similar vehicles.

All-Terrain Vehicles

There is a tremendous range of capabilities represented by all-terrain vehicles (ATV's) and snowmobiles; some are designed for dirt and mud, some for swamps, streams, and bogs, some for snow alone, and some can handle all of them. The tracked ATV's, such as the Cushman Trackster (see Table D-1), have more terrain versatility than the wheeled ATV's, but they all offer good bases for small tactical vehicles. When the existing outer shell is removed and replaced with a smooth, light, armored covering a mobile turtle is the result. Such a vehicle would be able to negotiate 45° slopes, push through brush, negotiate obstacles, achieve speeds of 24 to 40 mph on flat ground, and carry 150 to 200-lb payloads with ease.

ATV Control Systems

The controls of most ATV's are very simple, consisting of tractor-type push-pull levers, a single "T" control which is rotated and pushed, or other straightforward devices. Most use torque converters which eliminate transfer case controls. It would be a simple matter to put together a control system for remote maneuvering of any of these vehicles. A head-aimed or other TV system

might need some kind of stabilization system to damp engine vibration and the jolts, bumps, and dips which are a part of off-road travel. The engines used in most ATV's and snowmobiles are usually small two-cycle models. These would have to be silenced, or perhaps a quieter four-cycle engine used, if the vehicle is to have any chance of success as a tactical vehicle. Very few of the vehicles on the market today are very efficient as amphibians. They have low freeboards and are not particularly stable. Some have auxiliary propellers for fording streams, but some redesign would be necessary to bring any of them up to an acceptable level of performance as a combat amphibious vehicle, even unmanned. Such redesign would include: sealing off all engine and control spaces, and providing snorkel and auxiliary propeller or water jet. These vehicles would be well suited to any of the combat, short- or long-range patrols and some of the engineer missions listed in Appendix B.

Grumman R/C Tactical Vehicle

Grumman Aerospace Corporation has constructed a test version of a remotely controlled tactical vehicle (RCTV) for potential application by the Army as a battlefield-support vehicle (see Table D-2). This RCTV was derived from a lunar vehicle (LV) concept, and employs features which were designed to enhance the reliability of the LV. For instance, failure in any one of the four 0.2-hp wheel-drive units will permit continued operation of the vehicle at lower performance levels, and double failures will not totally disable the vehicle. The RCTV uses a fixed TV camera for driving purposes and incorporates rangefinding laser devices, microwave radar, and mine detectors. Power is supplied by Zn-air batteries which furnish 5 kwhr energy. The gross weight is expected to be 626 lb. The operational parameters will include a range of 11 miles and a speed of 3 mph for 3.7 hours. The total target unit cost of the RCTV is in the range of $13,200 to $21,200, which includes the basic vehicle; control, electrical power, navigation, and communication systems; and the TV system.

Land Vehicles*

Little David

The Little David vehicle has demonstrated a capacity to move over moderately rough terrain at about 5 to 10 mph on flat ground. Three possible configurations, having the following dimensions and weights, are called out in Tables D-4 and D-5: Concept 6X6 (electric drive), 6 x 6 ft, 800 lb; Concept 4X4 (electric drive), 4 x 4 ft, 700 lb; and Concept 4X4 (gasoline engine), 4 x 4 ft, 500 lb.

Although the Little David was designed primarily to function as a demolition vehicle, its performance as a machine-gun mobile platform, as a TV (surveillance) platform, and in laying communications wire has been tested. The device performed, but was never taken past the early developmental stages; why? One possibility is that it was before its time (early 1950's), another is that it did not perform well enough to convince people that it would be useful. Today, a number of changes could be made to Little David to upgrade its capabilities for combat missions and short-range patrols: the suspension system could be simplified and made more rugged by using Terra or other high-flotation tires, a head-aimed TV system could be used for steering, gun firing and observation; a host of sensor packages could be modularized for mounting on David as the need arose; a permanent radio link with the control station could have a number of unused channels reserved for these sensors as needed; the device could mount a flame thrower, gas dispenser, or rocket launcher.

This very basic platform is probably the first logical step in development of miniature tactical vehicles. Two variations on the Little David would be a tracked platform with the superstructure lower than the track tops so that it could run (even upside down) in the most rugged conditions, and a very fast, low-silhouette tank killer to be used from ambush over short distances.

---

* The influence of terrain and weather on the performance of land vehicles, including a soil trafficability analysis, is presented in Appendix E.

Ryan Jeep-Mounted R/C Mine Detector

The Ryan Aeronautical Co. has designed and manufactured a "Radio Remote Control System for a Truck-Mounted Mine Detector" for MERDC (see Table D-4). The jeep was selected simply because it is an already existing piece of military hardware. The concept is a good one, but limited in its present form. The jeep is a relatively rugged off-road vehicle in its own right but would not be the vehicle of choice for continuous off-road mine sweeping. A specialized vehicle for mine detection, laying, and removal could be built, but it need not be "miniature". It would require a detector sweep head, a mine marker system and an R/C tracked undercarriage in the simple version, and would have stereo TV and a very precise manipulator in the sophisticated version.

A mine detector, and especially a mine-removal device, is a high-risk item and, as such, should not represent an extremely heavy investment on a "per item" basis; the development of the device might indeed be expensive, but if it were finally distributed four per engineer battalion, for instance, the cost could be very attractive.

The mechanical functions of the Ryan vehicle are powered hydraulically, which is efficient, as the engine has more than enough power to handle the job. On a smaller, more portable platform, it would be simpler to use electrical servos run from a battery pack being charged by a small gasoline engine prime mover.

The simpler vehicle could perform the engineer mission of detecting mines and could be used in emergencies to detonate mines, spring traps, demolish obstacles, and lay communications wire.

The more sophisticated vehicle would probably be considered too valuable for anything but its primary mission of laying, detecting, and removing mines.

Walking Vehicle

The Walking Vehicle developed by Space General for NASA/AEC and now undergoing experimentation at MERDC is a small (26 in. high x 29 in. wide x 37-1/2 in. long) eight-legged vehicle similar to the ROAM described in Table D-5.

It has yet to prove itself more than a curiosity. Its use would lie, presumably, in such things as bunker invasion, urban warfare (climb stairs, rubble piles, look around corners, etc.), and perhaps mountain warfare. The problems associated with such a device are legion: inclined to be unstable; slow, thus affording a relatively easy target; subject to damage and fouling of the leg and actuation mechanism; and difficult to control remotely because the jolting movement does not permit its TV camera to remain steady. It is certainly not obvious that a small tracked vehicle could not be built that would go anywhere the present Walking Vehicle can go and then some. However, a number of studies have shown theoretical advantages of the Walking Vehicle over tracked, and certainly wheeled, vehicles in very rough terrain.

General Electric is now engaged in work on a "pedulator" using a man as master to slaved legs. It might eventually be possible to station the operator at some secure control station in an appropriate servo-harness and telemeter the servo positions automatically and continuously to the walking (or perhaps climbing) machine. A foveal-peripheral TV system would provide the man with adequate visual feedback of the vehicle environment, and high-resolution pictures of a centered work area.

This is one area where further R&D is indicated but, as yet, no expenditure of funds has been specifically directed toward development of hardware.

The Walking Vehicle would be best suited for short-range patrols, perimeter security, and possibly as a mobile gun platform.

R/C Lawnmower

This vehicle is representative of a large number of small vehicles; e.g., the Mighty Mo X-150, described in Table D-4. In general, they are small, easily controlled remotely (some already are), powered by a small gasoline engine or a battery, and usually designed to carry one or two people. When the seats and other accessories are removed, and a light metal frame, Terra tires and servo controls are installed, a very basic mobile, R/C platform results. This, however, is a long way from becoming a military machine; except for special, one-of-a-kind types of missions, developed as a quick response to a requirement for such a vehicle levied by an intelligence arm or a para-military arm of the Government, such a

vehicle would not be acceptable to the military. Granted, the device is simple and could quickly be brought to the point where it could be sent over the ground with a bomb, for instance, but it simply would not be rugged enough, reliable enough, or secure enough to do its job time after time. It is much better to start from the ground up, designing around tactical environments and directed toward military goals, than to attempt to adapt this hardware. There is nothing in the technology which is not readily available to the R/C land-vehicle designer.

Water Vehicles*

R/C Aberdeen Boat

The Aberdeen boat, described in Table D-7, is one of the very few miniature vehicles found during the investigation which was designed in response to a tactical mission's requirements. The boat functioned perfectly in tests but apparently was never put to use, for reasons which were not available. The boat is flat decked, 69 in. long by 11 in. wide and draws 6 in. of water when carrying its design payload of 10 lb (27 lb basic weight; capable of carrying 20-lb load).

Similar boats could be constructed for a variety of missions: floating mine, bomb delivery, decoys. They could be used *en masse* with very rudimentary guidance and control against flotillas, or to detonate in areas suspecied of being mined.

A number of design changes could be made to make the boat more effective and versatile.

- Fabricate the entire hull from solid polyurethane foam with all electronics potted and permanently foamed in place--this would eliminate the possibility of water, humidity, and fungus damage.
- Coat outer surfaces with a layer of fiber glass for strength or toughness.
- Leave a midships cargo area, a forward cargo area, and a battery-pack area free for different payloads, payload handling equipment, and power supplies. Provide sealing hatch covers.

---

* The influence of sea state and current on the performance of water vehicles is discussed briefly in Appendix E.

- Mold in a bow plunger trigger and relay which could be used or not according to mission.
- For absolute security, use a wire guidance system where a thin wire is paid out from the boat during its trip.
- Design the shore control box for either RF link or wire guidance.

R/C Firefish Target Boat

The Firefish series of target boats (the smallest boat is 17 ft and weighs 1650 lb, including fuel) was originally designed as a drone to simulate enemy craft for naval gun practice (see Table D-6). It is now being pushed by the manufacturer, SANDAIRE, not only for its primary mission, but also as a demolition boat, a platform for psy-war and propaganda, a harbor surveillance craft, a mine/obstacle clearance device, decoy, and other tactical uses. The size of the boat takes it out of the miniature class, but there is no real need for it to be so large; any of the smaller fiber-glass-hulled sports runabouts could do the job admirably. A displacement-hull, low-silhouette boat about 6 to 8 ft long with either a 5-hp electric or 10-hp silenced gasoline engine should be enough to give a good top speed of 25 to 30 knots. A small autopilot responding only to coded update signals would be one short-term way to prevent RF interference during transit time. Wire guidance is still a possibility, with the wire fed from a tube aft of the prop wash. This method would probably work well to a range of 2000 ft.

The Firefish line has very good possibilities as a tactical craft and should be a primary subject for further R&D effort.

R/C Submersible Sea Drone

Submarines are the ultimate clandestine sea weapon and have been used in all sizes from one-man midgets and swimmer delivery vehicles to the present-day nuclear giants. There is a definite place for the tactical miniature submarine: as a guided torpedo controlled from a concealed position on shore, as a sensor package to detect ship movement, as a remotely emplaced mine, and as a clandestine surveyor to chart position and configuration of underwater installations. The Sea Drone submersible (see Table D-7) is ideally suited to all of these missions. It is not small, but size is not so crucial to such a vehicle and must be traded off against the great versatility of the craft.

For the single-purpose missions, however, a much smaller vehicle could be built. Acoustic telemetry would be almost mandatory, although short distances using wire guidance are possible. There are no means by which communications can be maintained with a submerged submarine by RF link except in special cases using a very-low-frequency carrier. This involves large antennas, large amounts of power, and is not secure.

The submersible can be preprogrammed to run a certain course, home in on an acoustic signal, and might even be designed to move up river, away from saline water; however, all of these methods are imprecise and subject to aberrations.

Power for the sub could be as simple as a high-pressure flask of gas driving a turbine and prop or an electric motor/battery combination. The gas-flask-powered sub would be ideal for a very fast, short-running torpedo, where the target would not be able to neutralize it. The battery/electric motor combination would serve in most other instances.

The biggest problem is knowing where the vehicle is at all times so that corrective action can be taken. One method might be to set up two hydrophones spaced a distance apart and feed the audio signals received from the submersible into a set of earphones. The phase difference in the sound arriving at the phones can be used to indicate angle and the loudness can be scaled to show range. Such techniques are under investigation at the University of Florida (Dr. Harry Hollien), and at the Coastal Systems Laboratory in Panama City, Florida, primarily for swimmer navigation. Another variation would be a head-coupled system where an onboard hydrophone pair would pick up target noise and the operator would steer blaurally.

R/C Swimming Television ("Snoopy")

The "Snoopy" vehicle developed at the Naval Undersea R&D Center (NUC) is a system used for inspecting underwater work (see Table D-7). The set would be extremely useful as is for inspecting sunken ordnance prior to explosive ordnance destruction. It has limited work capability now but could carry a more sophisticated manipulator, perhaps a scaled-down version of the NAT (Naval Anthropomorphic Manipulator) of MB Associates. The vehicle can be controlled with head-coupled TV and could be used for underwater surveying, inspection, surveillance, and reconnaissance of enemy installations for real-time assessment.

Hydrofoils

Very small hydrofoil boats would offer no particular advantage over small, fast, planing hull boats; the maximum speeds of a model hydroplane boat range around 50 knots remotely controlled, and it is doubtful that a small hydrofoil boat would be any more seaworthy in the open ocean, or that it could be controlled at any greater speed in calm water. One advantage is that the vehicle would pitch and pound less than a planing hull in moderate seas.

SKAMP and Aerohydrofoil

The SKAMP concept (Table D-8) of a remotely controlled sailing platform could be coupled with the aerohydrofoil concept of a very-high-speed sailing vessel to produce a vehicle which operates for long periods of time, using wind power only for propulsion and battery power for data transmission. The vessel could be quite small and could be used in the station-keeping mode to monitor ship traffic, listen for submarines, carry sniffers, LLLTV for coastal surveillance, and other sensors.

Oscillating Foil Boat

The oscillating foil boat has particular application to marshes and vegetation-choked waterways. This is also the territory for ACV's and air boats, but the oscillating foil boat has an advantage in that it could be made much quieter than the other two. The general principle should first be demonstrated conclusively on larger craft before initiating a program for small R/C boats of this design.

Amphibious Vehicles

Riverine Utility Craft

The Riverine Utility Craft (RUC) is a marsh vehicle, and as such, it has done a respectable job during early development and initial tests. It does not work well on firm soil, but neither does a boat, and this limitation must be recognized. In areas of extensive swamp and marsh such as the Everglades and the Mekong Delta, the RUC and smaller versions of it would be a useful tool. Another

useful area would be in tidal swamps and estuaries; the vehicle could be deployed from an offshore boat or submarine, go ashore, up the beach or estuary and move to some target location near the beach. The remote control of such a vehicle would be handled the same as for a ground vehicle.

Visibility in marshy terrain tends to be obscured by tall grasses, jungle vegetation, or mangrove and a small RUC used for tactical purposes may, of necessity, be remotely manned instead of remotely controlled. This would mean a higher cost vehicle and thus require very good justification. In any event, there is a "mobility" gap in the twilight zone between water and firm soil which the RUC seems to fill.

Air-Cushion Vehicles

Air-cushion vehicles (ACV's) are attractive for use in marshes over relatively calm water because of the very high speeds which can be attained where other vehicles are virtually immobile. As a tactical vehicle, they have some definite drawbacks: they tend to be noisy, highly visible (due to spray or dust kicked up by the lift fan), and not very maneuverable. Control would almost have to be by onboard TV except for the very simplest, short-distance runs, or where control from helicopter or slow-flying aircraft is possible. On the positive side however, there are means available for silencing the engine and fan, and if a number of expendable ACV's were to be employed at one time, visibility might be a minor penalty.

The ACV has real potential for use as a minefield penetrator. With ground pressures which can be as low as 0.1 psi, the chances of detonating anti-tank and anti-personnel mines are slight. The little "flying saucer" could be used to carry a mine detector and mark the mines in its path, or could simply lay communications wire from one area to another over suspected ground. Size and noise would not necessarily be so critical in these cases (see Table D-9).

CONFERENCE

A one-day conference on miniature, R/C tactical land and water vehicles was held at Battelle on June 22, 1972. The morning session was devoted to

concept generation and the afternoon session was concerned with evaluation of some of the concepts, a discussion of the general state of the art, and R&D requirements. Representatives from industry and private life were called together to lend their various talents to the conference and to relate their differing experiences.

The results of this conference were useful in two respects: first, manufacturers who have worked intimately with the Government on programs involving small tactical vehicles were able to provide authoritative information on the state of the art, their prognosis for directions that future work should and would take, and the problems inherent in the field; second, they were able to bring together an impressive body of information on past projects involving R/C tactical vehicles - why they worked or why they failed. Many of the conclusions and recommendations presented in this report resulted from the process of "talking through" the various projects and experiences of the conference participants. Highlights of the conference are given in Appendix F.

CONCLUSIONS AND RECOMMENDATIONS

The major conclusions which have been drawn during the course of this investigation and recommended courses of action for future work are presented below.

Conclusions

Line of sight is the cutoff point as far as low-cost R/C vehicles go; when it is necessary to take a vehicle from the region where it can be controlled by simple R/C methods, e.g., model-airplane transmitters and receivers (on the order of 1000 to 3000 ft), to even a distance such as a mile or two, the cost for such a system increases drastically (e.g., from $3000 to $30,000). The reason is that the vehicle can no longer be remotely controlled (man controls motions by observing vehicle directly and reacting accordingly); it must be remotely manned (man controls machine motions by monitoring TV transmission from vehicle). Variations such as transferring remote control from station to station as the vehicle moves progressively out of range, or controlling it from a mobile station, such as a helicopter or drone aircraft, are possible, but in a sense, this defeats the purpose of the vehicle in the first place. Even if the vehicle were to be controlled by on-board sensors and preprogrammed instructions, the cost would be at least an order of magnitude greater than for the line-of-sight system.

Jamming techniques and techniques for finding R/C frequencies are highly advanced. Except when complete surprise is easy to obtain (e.g., close-quarters ambush), an enemy familiar with the vehicle, say through examination of a captured model, would have no trouble jamming or otherwise disrupting most simple R/C systems. For longer missions, or where the vehicle is not a complete novelty to the enemy, greater radio equipment sophistication to protect against countermeasures drives costs up very rapidly. The requirement to develop an inexpensive, expendable tank killer, mobile satchel charge or similar vehicle appears to be at odds with the sophistication needed to keep the radio link secure. The vehicle could indeed be put together at relatively low cost, but the electronics remains the cost controlling factor. Mass production of the communications and control systems would lower the price, but the first demonstration models and the initial production runs would be expensive.

Miniature land vehicles have inherent problems which are most apparent in the rough terrain situations one would expect to encounter on battlefields. Topographical features which would be hindrances to larger vehicles become barriers to small vehicles. As vehicle size decreases the avenues of approach become more limited, the vehicle path length is long, and the number of mission aborts increases.

Gasoline engines will, in general, be a better power source than batteries, diesels, or turbines. More energy can be supplied by a tank of gas than by a bank of batteries of the same weight, and small engines are inexpensive. The problem of silencing engine-exhaust noise is being studied in a number of places, and for battlefield conditions an acceptable noise level should be easily obtained. For covert operations, however, battery power would be essential.

A double-tracked land vehicle with little clearance between the tracks would provide the maximum maneuverability, mobility, and stability of any running gear. The tracks could be driven by means of torque converters, as in present-day snowmobiles, and steering could be handled by varying motor rpm to each track independently.

Existing military specifications may not be strictly applicable to miniature, R/C vehicles; relatively low reliability might be tolerated for the expendable models.

One problem which exists with remotely manned systems using TV is that at high speeds, especially on ground vehicles, camera motion makes vehicle

control extremely difficult. This problem can be overcome to a degree by operator confidence and skill, but 50 or 60 mph seems to be a state-of-the-art limit on relatively smooth terrain.

The vast majority of people contacted, from all disciplines, expressed the same sentiment: "Give us a mission and some money, and we will build the vehicle you need". The general and inescapable conclusion one draws from this is that the technology and expertise exists today to build small, R/C vehicles for specific tactical missions. The problems are to: (1) specify missions which are reasonably circumscribed and do not require the vehicles to do all conceivable jobs, and (2) provide sufficient funds to develop the vehicle. These problems are interrelated; one of the most frequently encountered comments was "they want the vehicle to do everything, but are not willing to pay for this versatility". Certainly this is a common complaint, but it strikes at the heart of the problem. Why are there essentially no miniature, tactical R/C vehicles in existence? They have been tried in the past, but never quite made it. The answer is that the initial efforts lacked sufficient urgency, funds, and high-level backing to carry through to operational status. The "Little David" mobile platform, the Aero-Jet walking machine, and other devices, have demonstrated their respective capabilities and then languished. The "Little David" was discarded, and the walking machine is now being used for in-house feasibility studies at the U. S. Army Mobility Research and Development Center, Fort Belvoir (MERDC). There are only two ways for the miniature, R/C vehicle to eventually make its way onto the automated battlefield: one is for industry to push through a concept of its own to the point where the feasibility, practicability, cost, and reliability of the vehicle make it irresistible to the military, and the other is for highly placed Government officials to decide that an R/C mine sweeper, or R/C bomb boat, or whatever, is definitely needed, and supply the requisite funds for a complete program. Knowledgeable manufacturers in this field are wary of investing large sums of time and money in a concept, when they have no assurance that they will be the successful bidder on any resulting Request for Proposal that is issued.

The manufacturers feel that the tactical military personnel who have been given the opportunity to evaluate or participate in the evaluation of remotely controlled or remotely manned equipment have, in the past, been hostile to the devices and to the idea itself. These men do not want a lot of expensive, highly sophisticated equipment that must be guarded, transported, and maintained for a mission which they feel might never materialize.

The systems approach is absolutely essential for all but the very simplest kamikaze vehicles where low cost and mechanical simplicity are traded off against reduced versatility and lower mission success/failure ratio. Much more exacting engineering is required to design so that one vehicle has an excellent chance of completing a given mission than to design for "salvos" of vehicles where it is sufficient if one gets through.

Recommendations

The design of three "basic platform" R/C vehicles - one for land, one for water, and one for underwater use - should be undertaken to demonstrate the feasibility of using commercially available components, insofar as possible, to produce expendable tactical vehicles. They would be low in cost, remotely controlled, designed for mobile bomb-type missions, and, in the case of the land vehicle, for short-range patrols. The prototypes should be designed for both wire guidance and conventional line-of-sight R/C. These vehicles could then be used to demonstrate the potentialities for miniature, R/C vehicles on the battlefield.

A study should be initiated to determine which specific missions would be best suited for small, R/C vehicle use. These specific missions would then serve as guidelines for the development of Phase ii vehicles, building on the knowledge gained from the Phase I vehicles described in the preceding paragraph.

APPENDIX A

INDIVIDUALS AND FACILITIES CONTACTED, REFERENCES, BIBLIOGRAPHY, AND LIST OF U. S. PATENTS

APPENDIX A

INDIVIDUALS AND FACILITIES CONTACTED, REFERENCES, BIBLIOGRAPHY, AND LIST OF U. S. PATENTS

Summarized below are the individuals and facilities contacted during the state-of-the-art survey, and the references, bibliography, and list of U. S. patents which resulted from searches of the TACTEC files, the DEIC files (Diver Equipment Information Center, located at Battelle-Columbus), the Defense Documentation Center, the Scientific and Technical Facility of NASA, and U. S. patents.

Summary of Contacts

Organization	Location	Major Subject of Discussion	Contact
Naval Weapons Lab.	Dahlgren, Virginia	Aerohydrofoils	Bernard Smith
AEC Space Nuclear Systems Office	Washington, D. C.	Teleoperators	Ed Johnson
Bendix Corp.	Denver, Colorado	Remote control vehicle	Barry Ellis
Autonetics	Anaheim, California	Miniature passenger cars	Don Garr
Night Vision Lab., Electronics Command	Ft. Belvoir, Virginia	Low light level-TV	Ben Goldberg
Eglin AFB	Florida	Remote control vehicles	Jerry J. Bauer
Mobility Equipment Research and Development Center	Ft. Belvoir, Virginia	Walking machines	Dick Sales
MB Associates	San Ramon, California	Remotely manned system	Don Adamski
Electric Boat Co.	Groton, Connecticut	Underwater manipulators	Allen Pesh
Philco-Ford Corp.	Palo Alto, California	TV cameras	Harold Gumbel
Army Tank-Automotive Command	Warren, Michigan	Remote control vehicles	Sam Fuller
Naval Missile Center	Point Mugu, California	Remote control missile targets	Mr. Hamilton
White Sands Missile Base	White Sands, New Mexico	Remote control missile targets	Mr. Crisp
Naval Weapons Center	China Lake, California	Remote control land and sea target drones	Tom Stogsdill

Organization	Location	Major Subject of Discussion	Contact
George Siposs	Costa Mesa, California	Remote control model cars	
Aerojet General	El Monte, California	Walking machines	Ed Ansell
Speedway Products	Mansfield, Ohio	All-terrain vehicles	John Morrow
Twinr.-K Inc.	Indianapolis, Indiana	Model components	Ed Hughey
Marion Michaelson	Royal Oak, Michigan	Little David vehicle	
SANDAIRE	San Diego, California	Radio control boats	James Fink
Babcock Electronics	Costa Mesa, California	Remote control components	Bob Swenson
Charles Mooney	Columbus, Ohio	Model craft	

TACTEC Search

(1) ENGINEERING CONCEPTS OF ARCTIC AND MARSHY TERRAIN VEHICLES, Ordnance Tank and Automotive Command, Research and Development Division (January 1956), 68 pp (UNCLASSIFIED) (PA 6911R).

(2) Kerr, R. C., THE ALBEE SINGLE ROLLER DRIVE, TANDEM AXLE, 6 X 6, ROLLIGON VEHICLE, Arabian American Oil Company (September 3, 1957), 23 pp (UNCLASSIFIED) (PA 7680R).

(3) REPORT OF SECOND MEETING OF ARPA ADVISORY COMMITTEE ON MOBILITY ENVIRONMENTAL RESEARCH STUDY, HELD FEBRUARY 24-26, 1964, Miscellaneous Paper No. 4-670, U. S. Army Engineer Waterways Experiment Station, Corps of Engineers, Vicksburg, Mississippi (August 1964), 199 pp (UNCLASSIFIED) (PA 9733R).

(4) Nuttall, C. J., Jr., and Grenke, W. C., A FIRST CUT AT DEVELOPING TESTABLE OFF-ROAD PERFORMANCE SPECIFICATIONS FOR VEHICLES ADAPTED TO SPECIFIC TERRAIN, Report No. 169-1, from WNRE Incorporated, Chestertown, Maryland, to Cornell Aeronautical Laboratory, Inc., Buffalo, New York, and ARPA, Project AGILE, Department of Defense, Washington, D. C. (June 1968), 80 pp (UNCLASSIFIED) (PA 33,977).

(5) Goda, H. L., et al., SIAF TRANSPORT TECHNOLOGY (U), Report No. P-653, Annex A, from Institute for Defense Analyses, Science and Technology Division, Arlington, Virginia (July 1971), 4 pp (CONFIDENTIAL/Group 3) (PA 40,030).

(6) Liston, R. A., et al., STATE-OF-THE-ART REPORT ON OFF-THE-ROAD MOBILITY RESEARCH, Technical Report No. 9560, Land Locomotion Laboratory, Components Research and Development Laboratories, U. S. Army Tank-Automotive Center, Warren, Michigan (November 1966), 329 pp (UNCLASSIFIED) (PA 29,227), AD 651 726.

(7) Wesolowski, R., and Koiva, M., TRAIL VEHICLES, Mobility Command, Vehicle Concept and Engineering Section, Advanced Design Branch, Research Division, Research and Engineering Directorate, Army Tank-Automotive Command, Center Line, Michigan (October 29, 1962), 49 pp (UNCLASSIFIED) (PA 7999R).

(8) Chaplin, H. R., and Ford, A. G., SOME DESIGN PRINCIPLES OF GROUND EFFECT MACHINES, Section G: Seakeeping, Report No. 2121G, David Taylor Model Basin, Aerodynamics Laboratory, Washington, D. C. (July 1966), 36 pp (UNCLASSIFIED) (PA 25,515), AD 640 015.

(9) Lowson, M. V., BASIC MECHANISMS OF NOISE GENERATION BY HELICOPTERS, V/STOL AIRCRAFT, AND GROUND EFFECT MACHINES, Report No. WR 65-9, Wyle Laboratories, Testing Division, Huntsville Facility (May 1965), 32 pp (UNCLASSIFIED) (PA 20,358), AD 623 158.

(10) Hayward, L., A SURVEY OF AMERICAN INTERESTS IN GROUND EFFECT MACHINES, HOVERING CRAFT AND HYDROFOILS, The International Review of Air Cushion Vehicles and Hydrofoils, Kalerghi Publications, London, England, Vol 4, No. 5 (February 1965) (UNCLASSIFIED) (PA 16,128N).

(11) BIBLIOGRAPHY ON LIGHTWEIGHT GROUND VEHICLES (U), Report No. R-910, from RACIC, Battelle Columbus Laboratories, Columbus, Ohio, to Director of Defense, Army Personnel Research Establishment, Farnborough, Hants., United Kingdom (April 17, 1967) (CONFIDENTIAL/Group 4).

(12) Hyatt, R. W., and Hardenbrook, J. M., TABULATIONS OF DAYLIGHT AND LOW-LIGHT-LEVEL TELEVISION SYSTEMS (U), Report No. R-4088, from RACIC, Battelle Columbus Laboratories, Columbus, Ohio, to Advanced Research Projects Agency, Arlington, Virginia (May 1972) (SECRET/Group 1).

DEIC Search

(1) UNDERWATER TELEVISION LINK, Industrial Research, p 59 (December 1970).

(2) A STUDY OF VARIOUS MARINE SYSTEMS CAPABLE OF PERFORMING WORK IN 12,000-FOOT WATER DEPTHS, Ocean Systems, Inc., 41 pp (DEIC Accession No. 02215).

(3) Niblock, R. W., UNMANNED UNTETHERED SUBMARINES DESIGNED FOR WORK TO 20,000 FEET, Undersea Technology, Vol 11, No. 5, pp 42-43 (May 1970).

(4) WEST GERMAN UNDERWATER VEHICLES, Undersea Technology, Vol 12, No. 10, p 25 (October 1971) (DEIC Accession No. 02257).

(5) VFW-FOKKER BUILDS PENGUIN (in German), Poseidon, No. 12 (108), p 545 (1970).

DDC Search

(1) Chatten, J. B., HEAD AIMED TELEVISION/REMOTELY OPERATED VEHICLES, Final Technical Report No. RADC-TR-71-49, for the period May 1968 - July 1970,

from Control Data Corporation, Rosemont, Pennsylvania, to Rome Air Development Center, Air Force Systems Command, Griffiss Air Force Base, New York (March 1971), 89 pp (UNCLASSIFIED) (PA 39,630), AD 883 618.

(2) Isbell, R. A., EVALUATION OF REMOTELY OPERATED MINE DETECTOR, Final Letter Report, Army Concept Team in Vietnam, APO San Francisco 96384 (October 1969), 10 pp (UNCLASSIFIED), AD 861 954 L.

(3) Amelink, H., AUTOMATION AND REMOTE CONTROL ON SHIPS: A SELECTIVE BIBLIOGRAPHY, Report No. TDCK-49991, for the period 1961 - 1967, Technisch Documentatie en Informatie Centrum vor de Krijgsmacht, The Hague, Netherlands (February 1968), 76 pp (UNCLASSIFIED), AD 832 259.

(4) McGhee, R. B., IMPROVED TECHNIQUES FOR THE CONTROL OF REMOTE DEVICES, Final Scientific Report, No. AFOSR-TR-71-2175, for the period January 15, 1970 to January 14, 1971, The Ohio State University, Department of Electrical Engineering, Columbus, Ohio (March 10, 1971), 7 pp (UNCLASSIFIED), AD 728 214.

(5) Hoffman, C. W., A RADIO CONTROL SYSTEM FOR A 1/150 SCALE MODEL OF USS FORRESTAL, Report No. 1359, David Taylor Model Basin, Washington, D. C. (February 1960) (UNCLASSIFIED), AD 249 908.

(6) Hoffman, C. W., A RADIO CONTROL AND POWERING SYSTEM FOR FREE-RUNNING MODELS OF SURFACE SHIPS, Report No. 1460, David Taylor Model Basin, Washington, D. C. (December 1960), 31 pp (UNCLASSIFIED), AD 233 798.

(7) Ruthven, B., Olsen, W. C., and Bennett, D. F., THE DEVELOPMENT OF A DRONE BOAT KIT (U), Report No. 275, Navy Mine Defense Laboratory, Panama City, Florida (November 1965), 39 pp (CONFIDENTIAL), AD 368 318.

(8) Jeffress, L. A., et al., A REMOTE-CONTROLLED, MINE-DISPOSAL BOAT (U), DRL Accoustical Report No. 242, Defense Research Laboratory, The University of Texas, Austin, Texas (June 9, 1965), 51 pp (CONFIDENTIAL/Group 3) (PA 21,953), AD 363 675 L.

NASA Search

(1) Myton, M. E., UNMANNED MOBILE VEHICLES FOR LUNAR SURFACE EXPLORATION, Report No. 61-SPC-8, from Defense Systems Department, General Electric Company, Santa Barbara, California, to National Aeronautics and Space Administration (November 13, 1961) (UNCLASSIFIED/NASA Only) (NASA Accession No. X69-75484).

(2) Finelli, J. P., et al., DUAL-MODE ROVING VEHICLES FOR APOLLO LUNAR SURFACE EXPLORATION, NASA Report No. TR-68-25, from Defense Research Laboratories, General Motors Corporation, Santa Barbara, California, to National Aeronautics and Space Administration (June 1968) (UNCLASSIFIED/Government Agency Only) (NASA Accession No. X69-14913).

(3) Miller, B. P., ANALYSIS OF REMOTE CONTROL SYSTEMS FOR LUNAR VEHICLES, NASA Report No. TR-68-20, from Electronics-Defense Research Laboratories, General Motors Corporation, Santa Barbara, California, to National Aeronautics and Space Administration (May 1968) (UNCLASSIFIED/Government Agency Only) (NASA Accession No. X69-13479).

(4) Corry, T. M., et al., ROVING VEHICLE MOTION CONTROL, NASA Final Report No. CR-92643 TR-67-60, from Defense Research Corporation, Santa Barbara, California, to Jet Propulsion Laboratory, California Institute of Technology, Pasadena, California (December 1967) (UNCLASSIFIED) (NASA Accession No. N68-15246).

Bibliography

INVITATION TO SNOWMOBILING, Ziff-Davis Publishing Company, New York, New York (1970).

Baldwin, W. C., and Miller, J. V., MULTI-LEGGED WALKER FINAL REPORT, Space General Corporation, El Monte, California (1966).

TRAFFICABILITY OF SOILS, A SUMMARY OF TRAFFICABILITY STUDIES THROUGH 1955, prepared by the Waterways Experiment Station, U. S. Army Corps of Engineers, Vicksburg, Mississippi (December 1966).

ENGINEERING DESIGN HANDBOOK, AUTOMOTIVE SERIES, AUTOMOTIVE SUSPENSIONS, U. S. Army Materiel Command (April 1967).

Mandel, P., WATER AIR AND INTERFACE VEHICLES, Massachusetts Institute of Technology (1969).

ENGINEERING DESIGN HANDBOOK, AUTOMOTIVE SERIES, THE AUTOMOTIVE ASSEMBLY, U. S. Army Materiel Command (December 1962).

Sweeney, J. B., A PICTORIAL HISTORY OF OCEANOGRAPHIC SUBMERSIBLES, Crown Publishers, New York, New York (1970).

Taggart, R., MARINE PROPULSION, PRINCIPLES AND EVOLUTION, Gulf Publishing Company, Houston, Texas (1969).

ENGINEERING INDEX, Engineering Index Inc., New York, New York.

Journal of Terramechanics, Pergamon Press, Fairview Park, Elmsford, New York.

U. S. Patents Search

2,115,315	Muller, et al.	3,331,463	Kramer
2,133,038	Muller, et al.	3,351,037	Melll
2,586,239	MacKenzie	3,372,664	Nicholas, et al.
2,593,618	Sebel	3,372,766	Lifferth
2,667,721	Muller	3,382,836	Hume
2,742,735	Sommerhoff	3,386,406	Tsunoda
2,770,074	Jones, et al.	3,398,480	Tsunoda
2,778,158	Ernst	3,403,654	Wilson
2,852,888	Howard	3,403,745	Commons
2,923,092	Reiser	3,409,100	Kronqvist
2,969,032	Pinnes	3,420,326	Kusmer
3,014,311	Ernst	3,427,078	Parsons
3,029,371	Saito	3,429,069	Sargeant
3,041,485	Jolley	3,430,724	Hutcherson
3,120,719	Simonds	3,446,175	Boehler, et al.
3,132,864	Glass, et al.	3,447,259	Cagen
3,160,983	Smith, et al.	3,452,702	Slemmons
3,166,039	Weymouth	3,458,950	Tomaro
3,172,233	Lent	3,466,798	Speers, et al.
3,178,853	Greenwood, et al.	3,470,633	Soehnlen
3,187,462	Licitis	3,472,333	Loewenstern, Jr.
3,196,580	Rakestraw	3,474,751	Hebert
3,199,249	Carver, et al.	3,504,122	Ratliff, Jr.
3,205,847	Smith	3,517,457	Peno
3,227,125	Grebe	3,517,458	Sato
3,242,896	Kauffmann	3,521,566	Veldhulzen
3,300,894	Glass, et al.	3,553,886	Hamilton
3,306,250	Pitchford	3,564,765	Stormon, et al.
3,311,424	Taylor	3,583,514	Taylor
3,327,796	Hanmer	3.589,058	Labat
3,594,951	Perhacs	3,634,969	Harlting, et al.
3,613,302	Stohrer	3,635,304	Hills
3,628,284	Soulakis, et al.	3,664,701	Kondur

The following patents also were noted in making the search. They appeared to be of less interest.

1,927,233	Forner	3,358,634	Pratt
2,054,644	Wulfert	3,363,714	Orpana
2,161,971	Muller	3,369,622	Thomas
2,167,245	Lohr	3,370,166	DaRold
2,463,362	Doll	3,376,945	Kaprellan
2,528,945	Carpenter	3,402,784	Roberson
2,723,492	Muller	3,414,072	Hodges
2,732,659	Howard	3,418,960	Nelson
2,736,990	Howard	3,418,961	Gregg
2,755,596	Well	3,420,204	Samuel
2,832,426	Seargeant	3,421,252	Downey
2,834,152	Lambert	3,421,472	Oberg
2,885,019	Gardner	3,426,720	Enos

A-7 and A-8

2,892,290	Ryan	3,428,015	Cloud
2,896,367	Glass	3,439,448	Ryan
2,940,217	Hauge	3,444,837	Donofrio
2,988,762	Babcock	3,446,174	Ballu
3,000,128	McAda	3,448,822	LaLone
4,046,697	Purlen	3,456,753	Graves
3,050,904	Morse	3,476,204	Westby
3,065,569	Nielsen	3,481,072	Stohrer
3,090,455	Crowley	3,482,352	Helm
3,130,803	Wiggins	3,486,477	Pender
3,171,963	Bourguignon	3,487,802	Roy
3,181,272	Gibson	3,501,863	Matsushiro
3,189,115	Rethorst	3,503,151	White
3,190,255	Olson	3,507,349	Comer
3,191,571	Rex	3,511,207	Ito
3,200,538	Glass	3,513,931	Warner
3,203,500	Gaberson	3,530,617	Halvorsen
3,229,420	Dias	3,550,714	Bellinger
3,232,005	Lahr	3,566,988	Wise
3,244,250	Barrett	3,587,769	Lotter
3,252,247	Miller	3,628,286	Mashahiro
3,306,249	Chase	3,642,087	Sampey
3,348,518	Forsyth	3,653,456	Uemura
3,426,721	Justinien		

APPENDIX B

MISSION ANALYSIS

APPENDIX B

MISSION ANALYSIS

The vehicles which are presented in this report are devices which, for the most part, exist independent of any military considerations. A small number were designed with specific tactical missions in mind, but most were built under other guidelines. In order to evaluate the existing and potential capabilities of these latter vehicles for use in tactical military missions, it is obvious that the first step is to define these missions. Accordingly, a brief outline of some possible general and specific missions was developed and is presented below. It should be noted that these missions are not the same as they would have been in World War I, and may well be obsolete for conflicts in the distant future; the aim here has been to draw up a series of possible missions for small, R/C land and water vehicles which would apply to current and foreseeable future conflicts.

Tactical R/C Land Vehicle Missions

Combat Mission

Low-profile equipment hauler

Anti-tank, anti-armored vehicle

Mobile gun platform

Ambush

Mobile bomb

Chemical-agent deployment

Forward observer (artillery, air strikes)

Short-Range Patrol

Surveillance (stationary observation, sensing, mapping, terrain study)

Reconnaissance (mobile surveillance)

Draw fire/decoy

Pointman, flanker, rear guard

Psy-war aid

Long-Range Patrol

Scout (reconnaissance/surveillance)
Rear guard or point (security)
Forward observer (artillery)

Engineer Missions

Lay mines, detect, recover (deactivate) mines
String barbed wire or other obstacles
Detonate mines, spring traps
Obstacle demolition
Bunker fortification destruction
Slit-trench digger, foxhole digger
Fire fighter
Lay communications wire

Base Activity

Sentry (stationary)
Watch dog (perimeter security)
POW guard
Litter bearer

Tactical R/C Water Vehicle Missions

Combat

Beach obstacle clearance
PT boat
Kamikaze (bomb delivery)
Bridge, structure demolition

Short-Range Patrol

Riverine, estuary patrol
Friendly harbor security
Minesweeper (detection, detonation)

Long-Range Patrol

Coastline surveillance

Enemy harbor activity surveillance

Psy-war platform

Minesweeper (detection)

Tactical R/C Amphibious Vehicle Missions

Combat

SEAL-type missions

Beach assault

Surf penetrators to deliver small R/C vehicles to shore

Bomb delivery

Short-Range Patrol

Same as for land vehicles except that vehicle is designed for relatively short water transits such as stream or pond crossings, rain-filled depressions, mud flats, and in swamps.

Long-Range Patrol

Same as for land vehicles except modified for relatively short water transits as above.

Engineer Missions

Lay communications wire through swamp, over water

Minefield penetration and detection (ACV's only)

Detonate mines, spring traps

String barbed wire

Obstacle demolition.

APPENDIX C

CONCEPT SKETCHES

APPENDIX C

CONCEPT SKETCHES

The rough illustrations of concepts shown on the following pages present a number of different ideas that have been generated during the course of this investigation. They are intended to complement the entries presented in Appendix D, using vehicles and components in various combinations to generate new systems and showing some completely novel ideas not presented elsewhere in the report. Land vehicles are illustrated in Figures C-1 through C-17; water vehicles in Figures C-18 through C-27; amphibious vehicles in Figures C-28 through C-31; and noncombat vehicles in Figures C-32 through C-36.

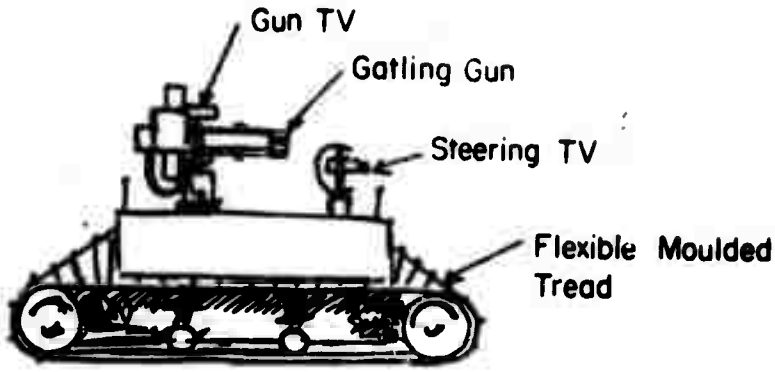

SIDE VIEW

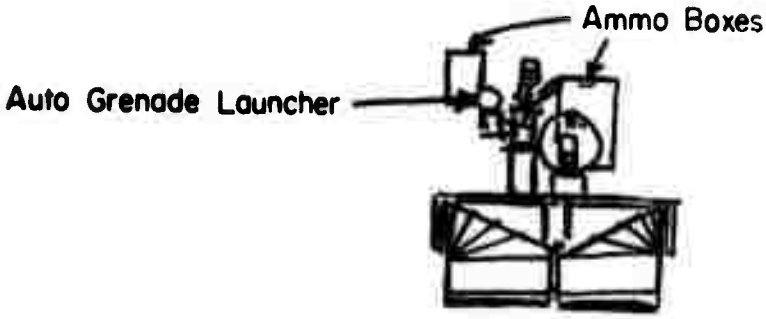

FRONT VIEW

Note: This tread is designed to provide maximum traction while at the same time presenting minimum width and the lowest center of gravity possible.

FIGURE C-1. MINI-REMOTE-CONTROLLED PATROL AND ATTACK VEHICLE

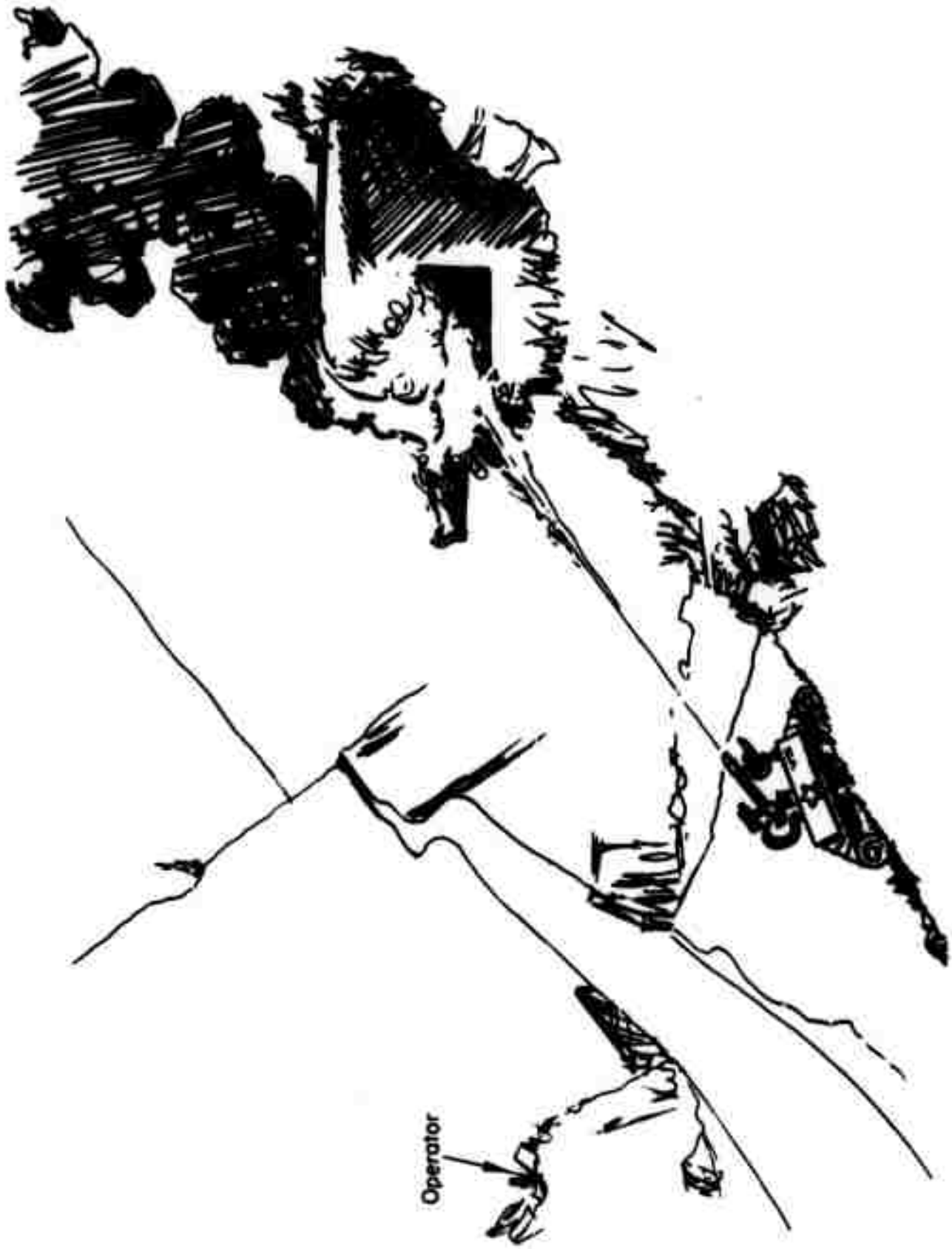

FIGURE C-2. FLAME THROWER

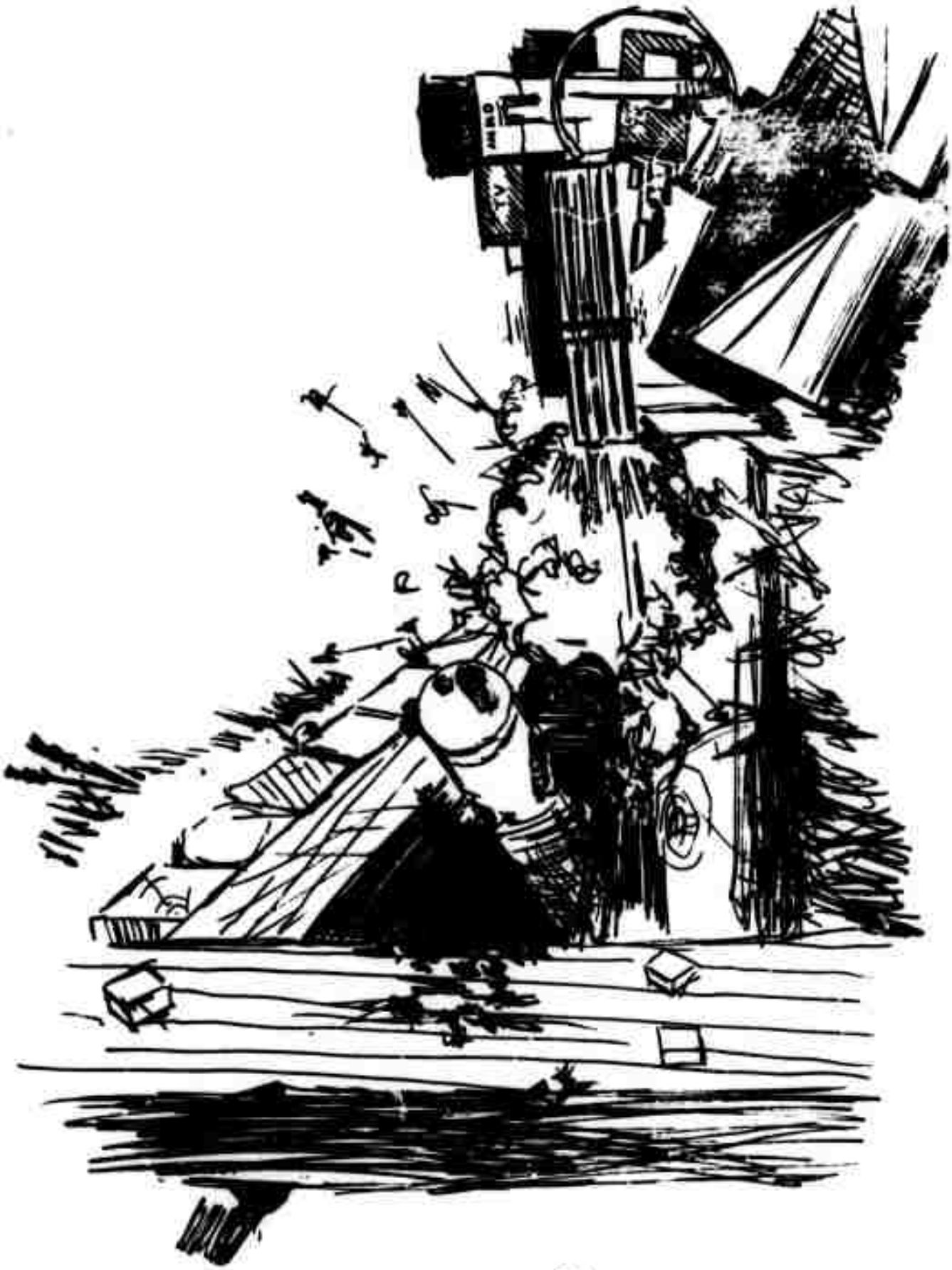

FIGURE C-3. ATTACKING DUGOUT WITH GATLING GUN AND GRENADE LAUNCHER

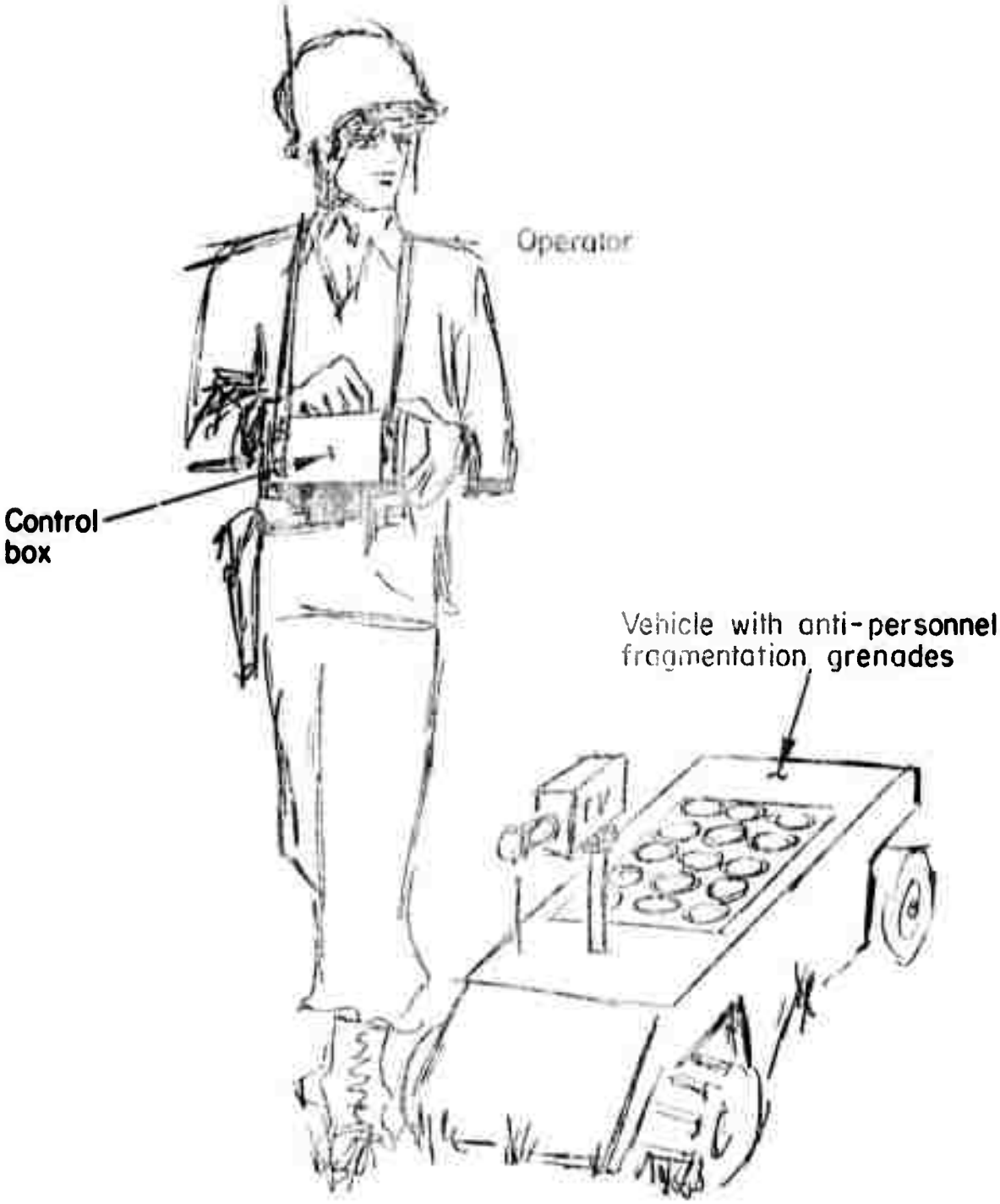

FIGURE C-4. RADIO CONTROL

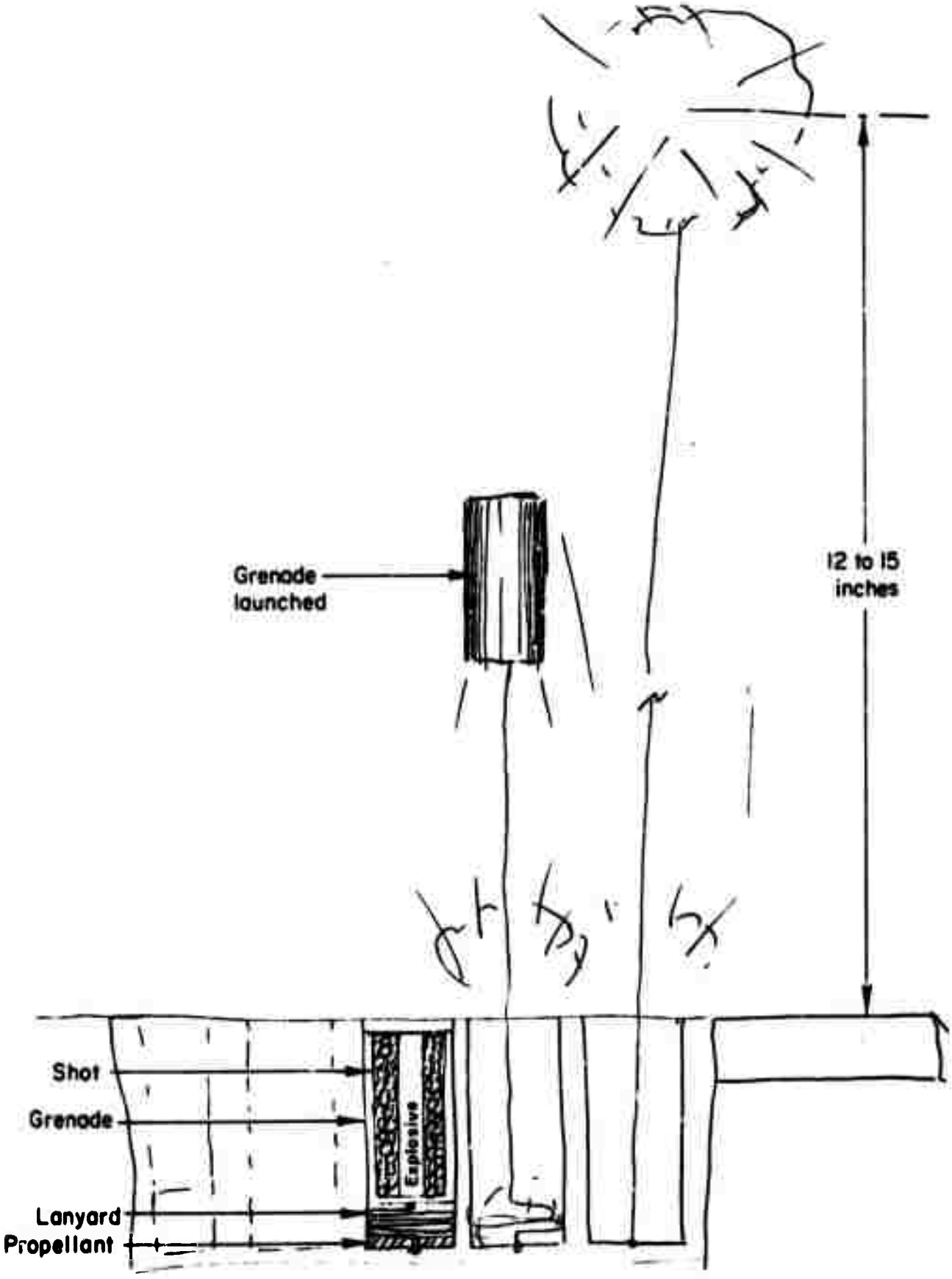

FIGURE C-5. ANTI-PERSONNEL FRAGMENTATION GRENADES

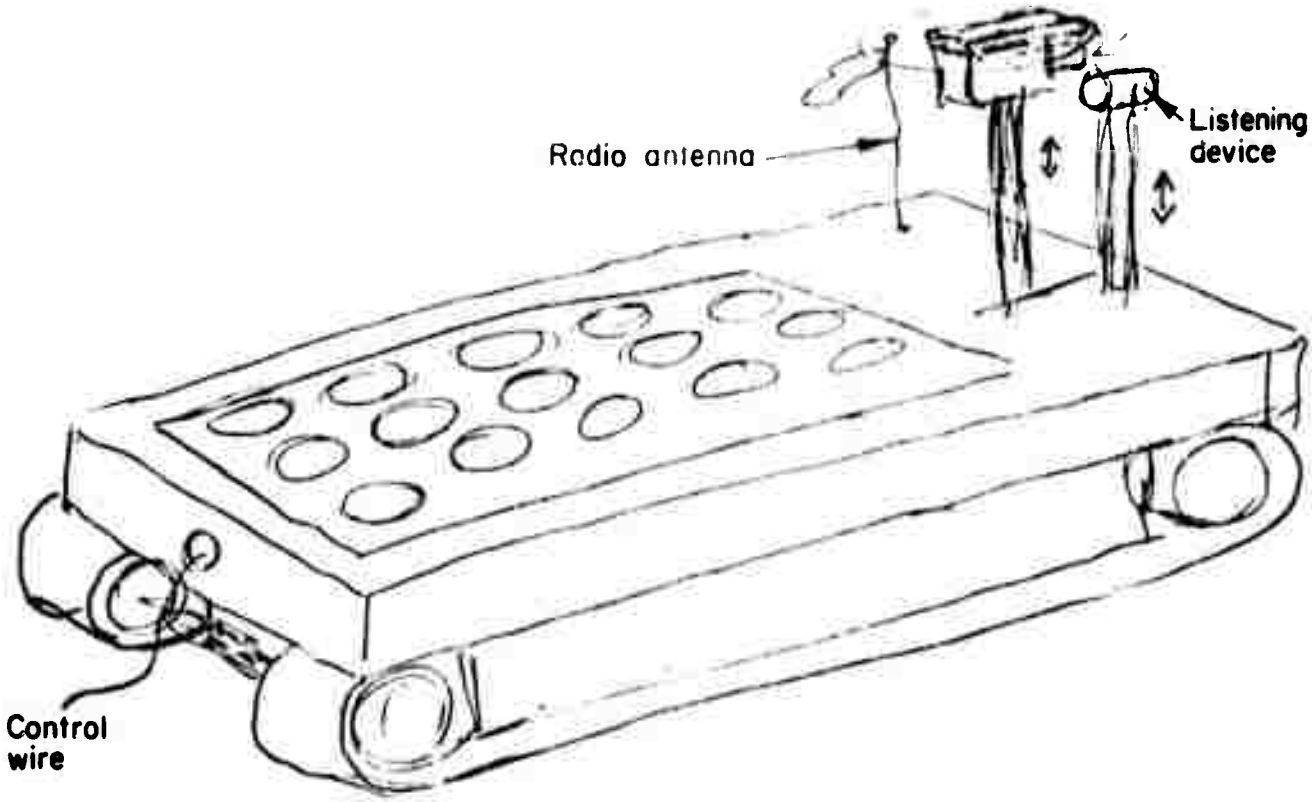

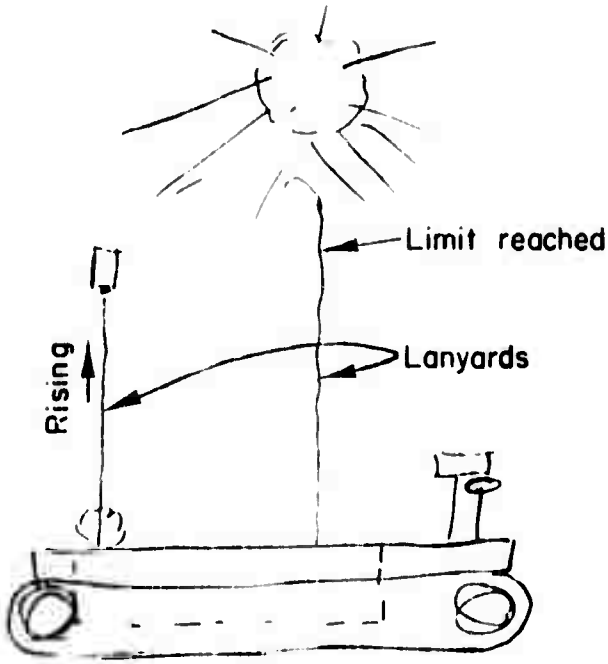

FIGURE C-6. TRACKED VEHICLE

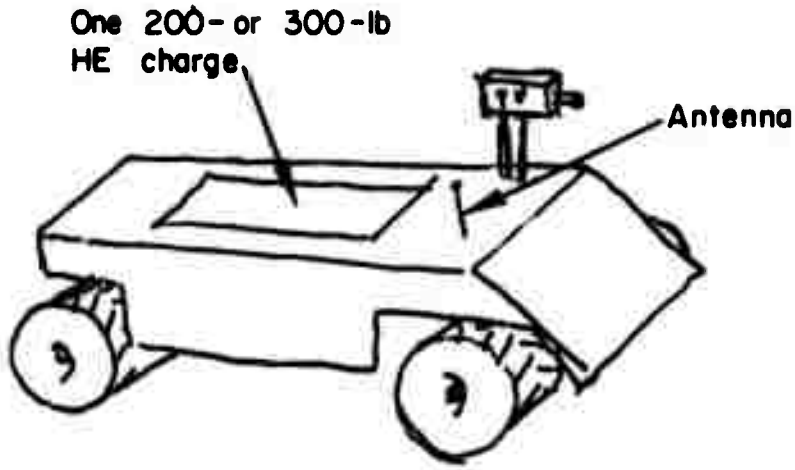

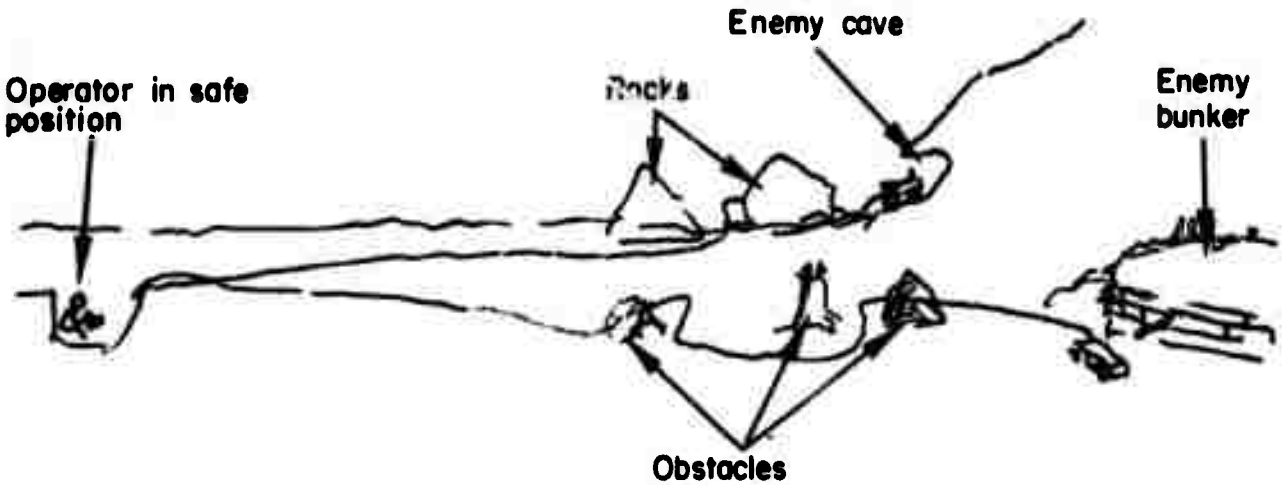

FIGURE C-7. VEHICLE FOR ONE-WAY MISSIONS

This vehicle is designed for use when the troops are too close to the enemy to call for air support or mortar fire. Here, vehicles loaded with high explosive work their way in close to the enemy. When the vehicles are in the best position, the operator detonates the charges, blowing up vehicles and enemy.

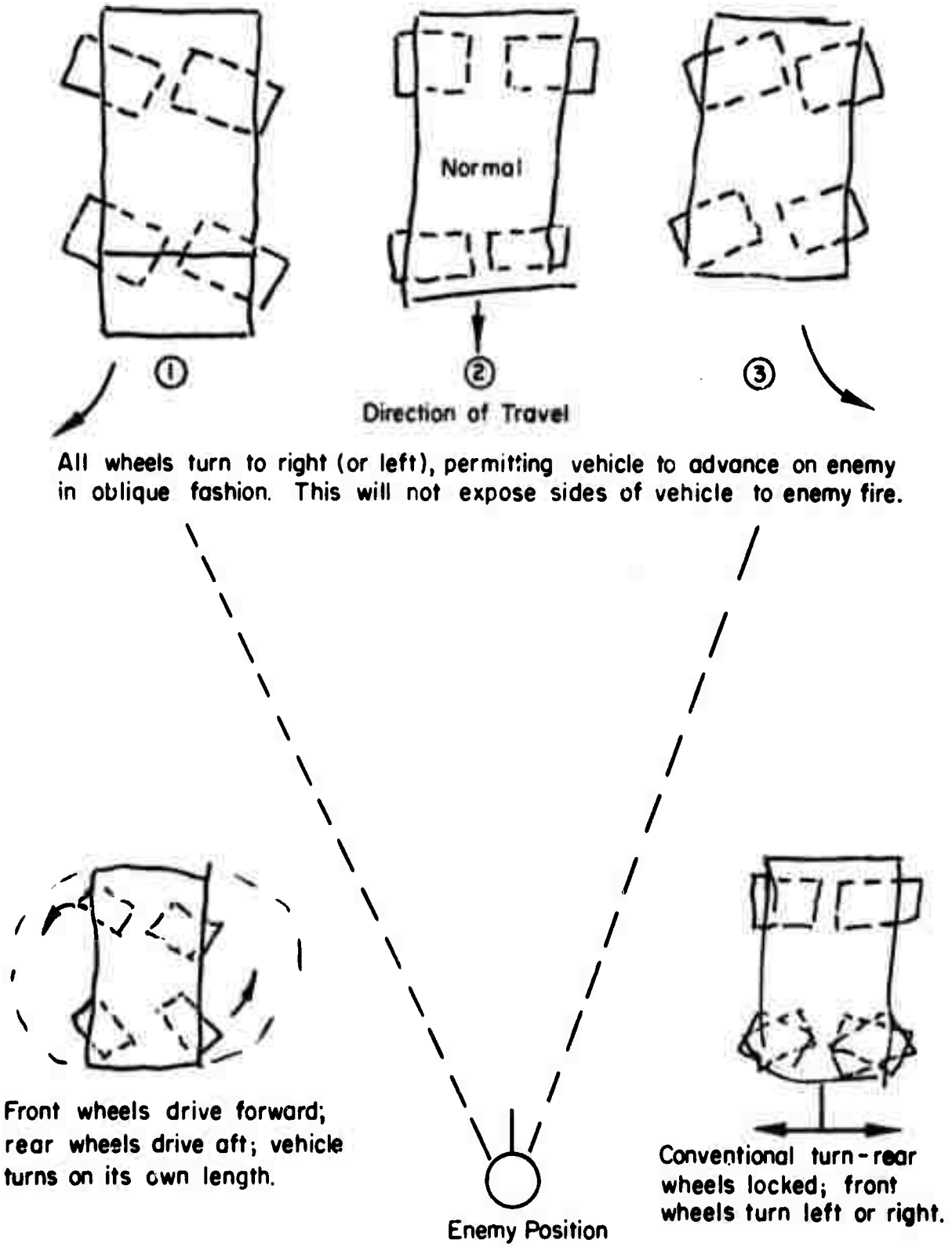

FIGURE C-8. POSSIBLE WHEEL POSITIONS (PRESENTING SMALLEST TARGET TO ENEMY FIRE)

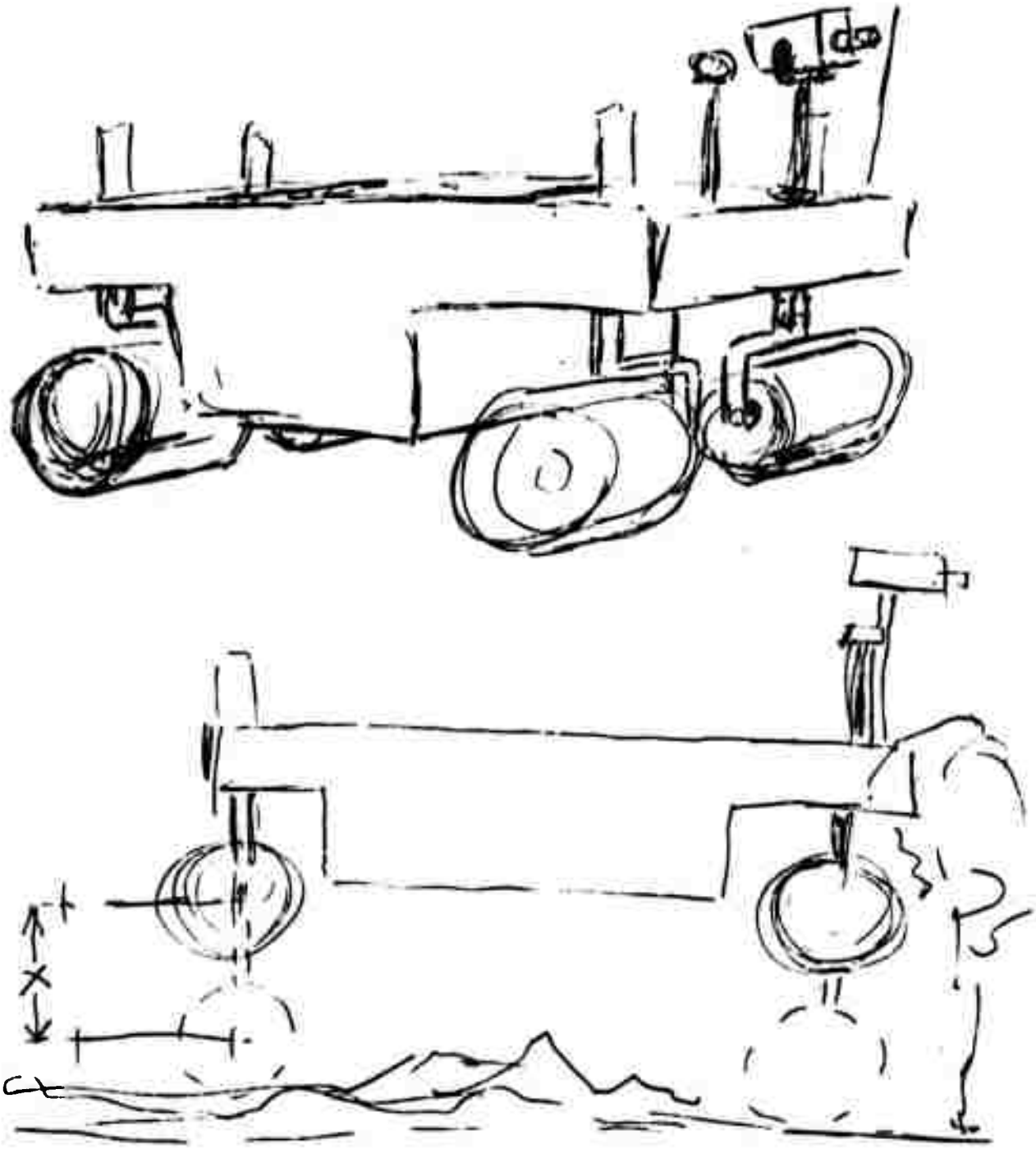

FIGURE C-9. TERRA TIRE (ABILITY TO FLOAT AND SWIM)

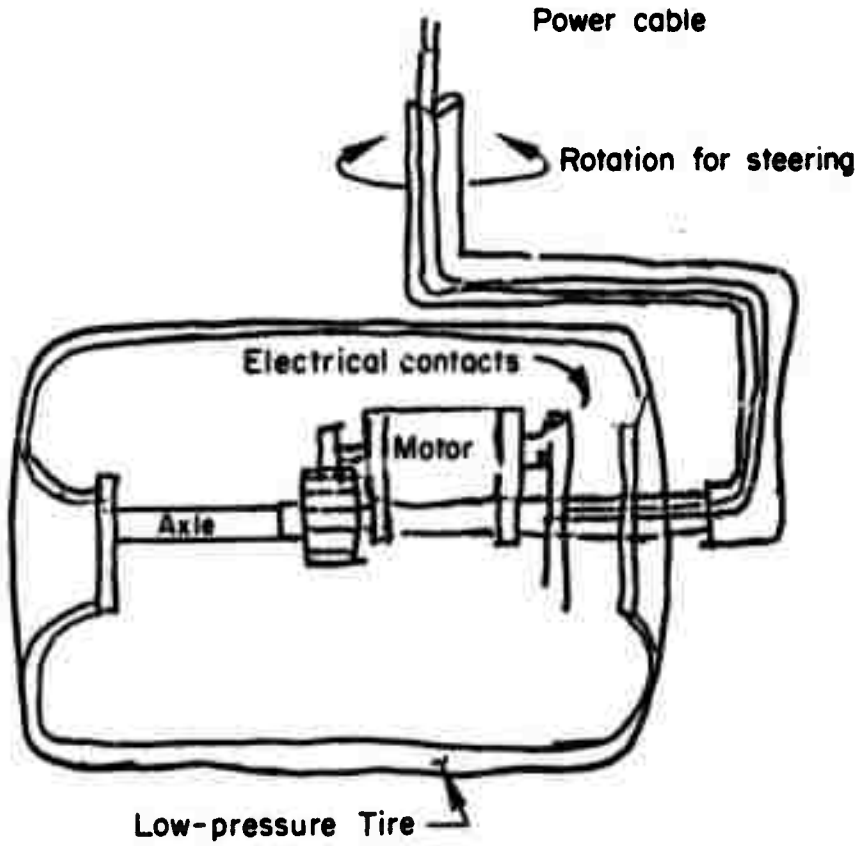

FIGURE C-10. INDIVIDUALLY DRIVEN LOW-PRESSURE TIRES

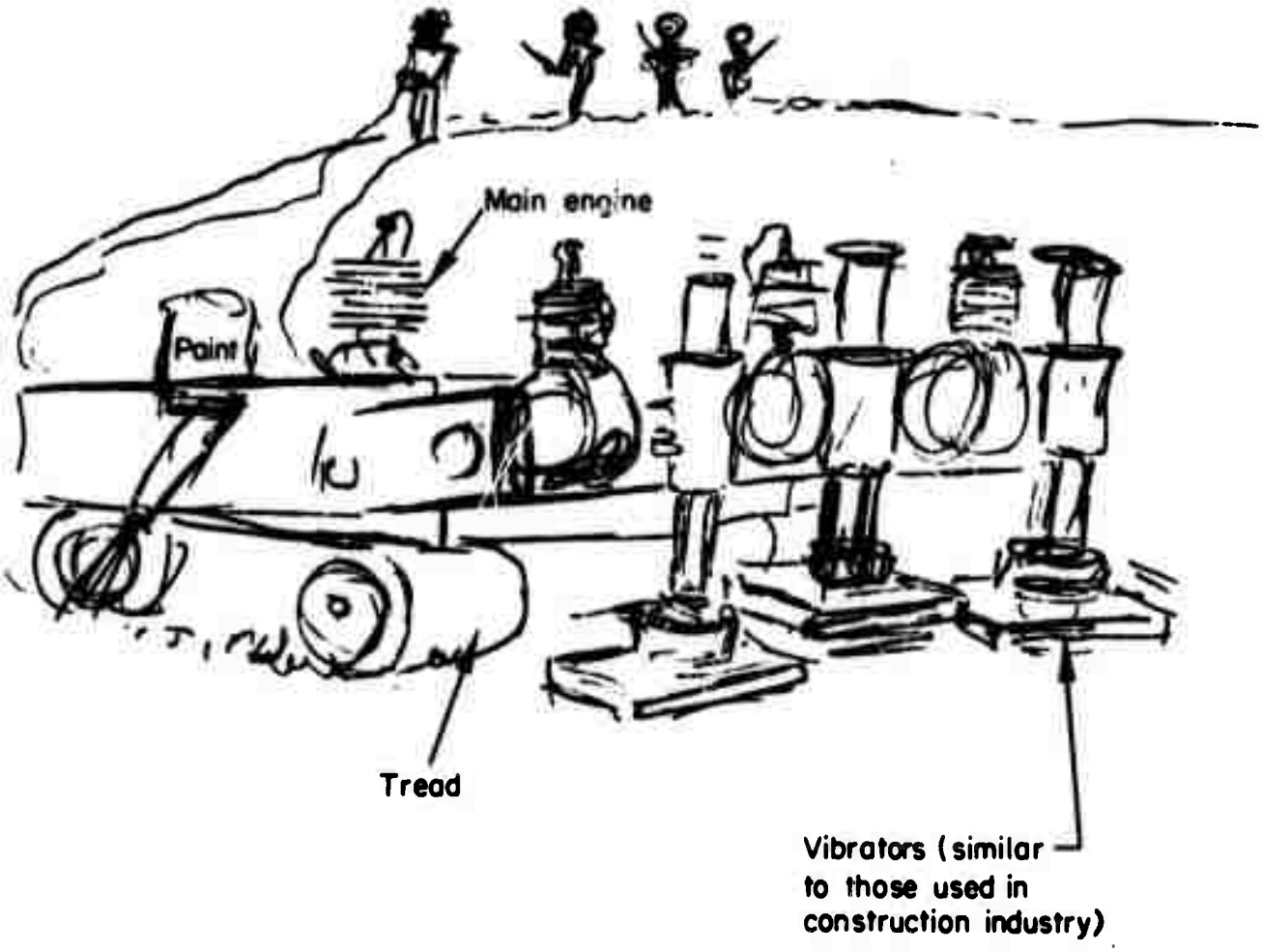

FIGURE C-11. LAND-MINE DETONATOR (GASOLINE ENGINES)

Vibrators tamp ground in front of advancing troops as they pick their way through a suspected minefield. Paint is sprayed from both sides of vehicle, showing safe path.

FIGURE C-12. REMOTE-CONTROL SNOWMOBILE FIRING TOW MISSILE

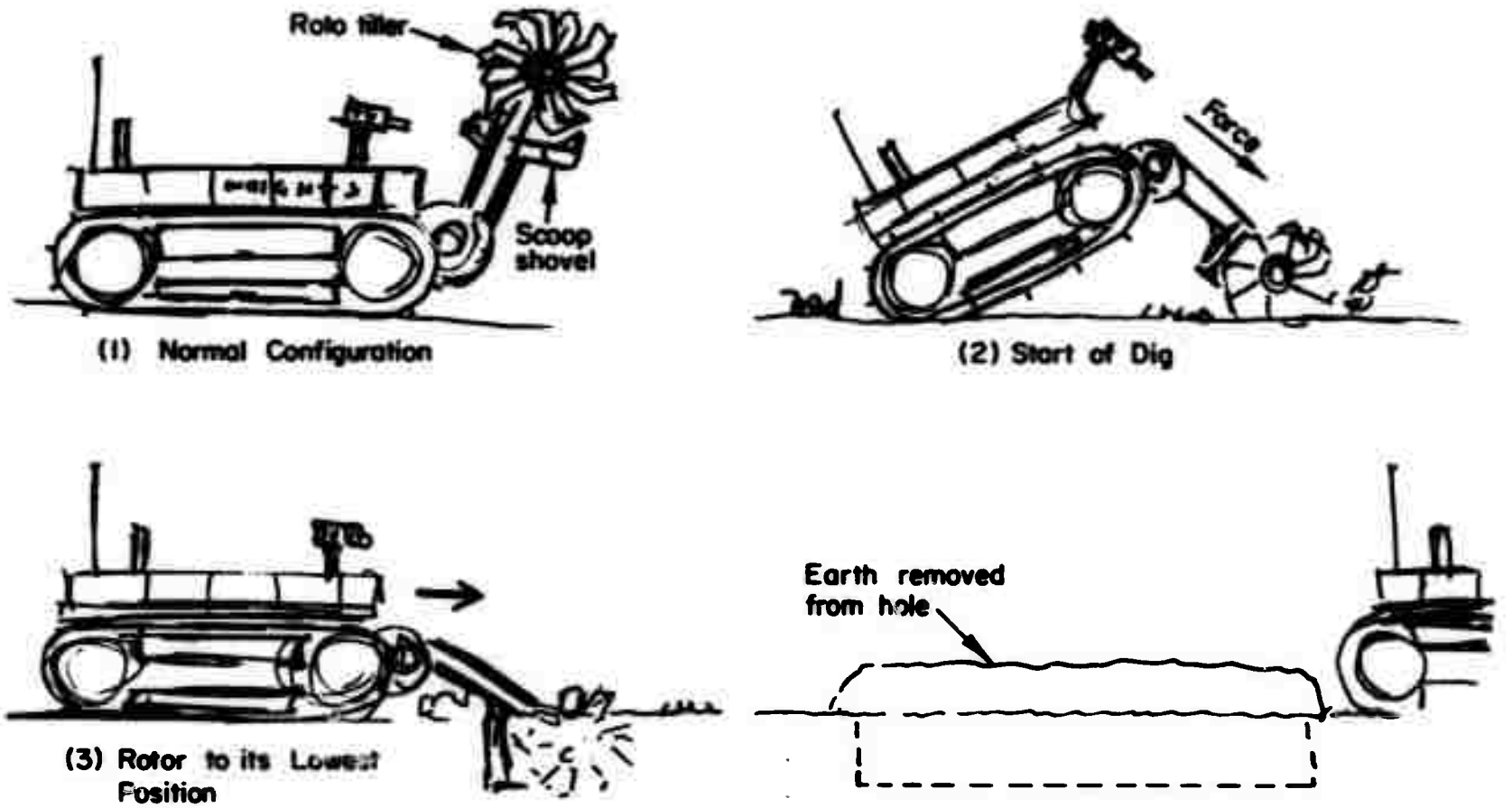

FIGURE C-13. FOXHOLE DIGGER

FIGURE C-14. SMOKE POT DISPENSER

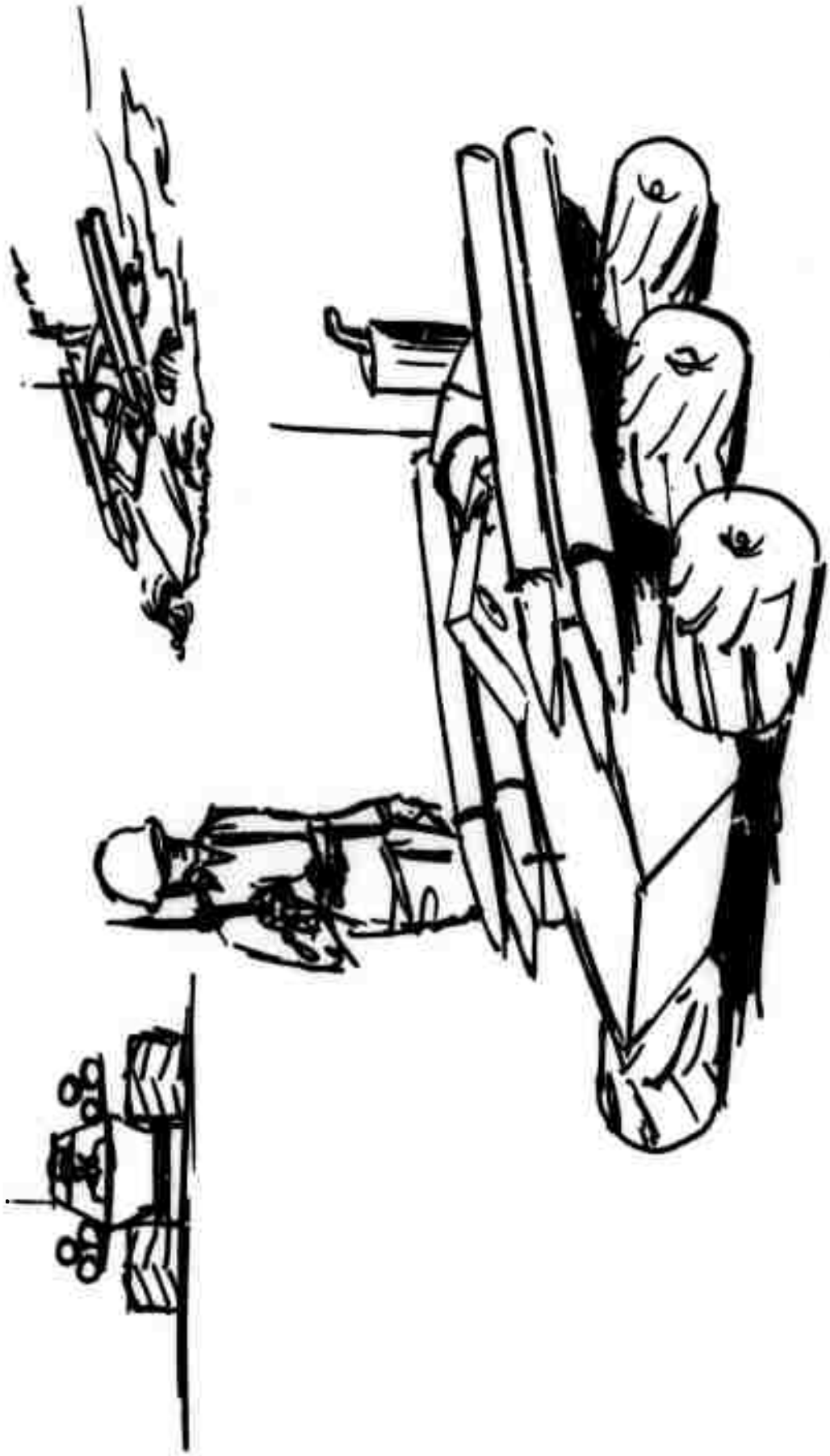

FIGURE C-15. ANTI-TANK

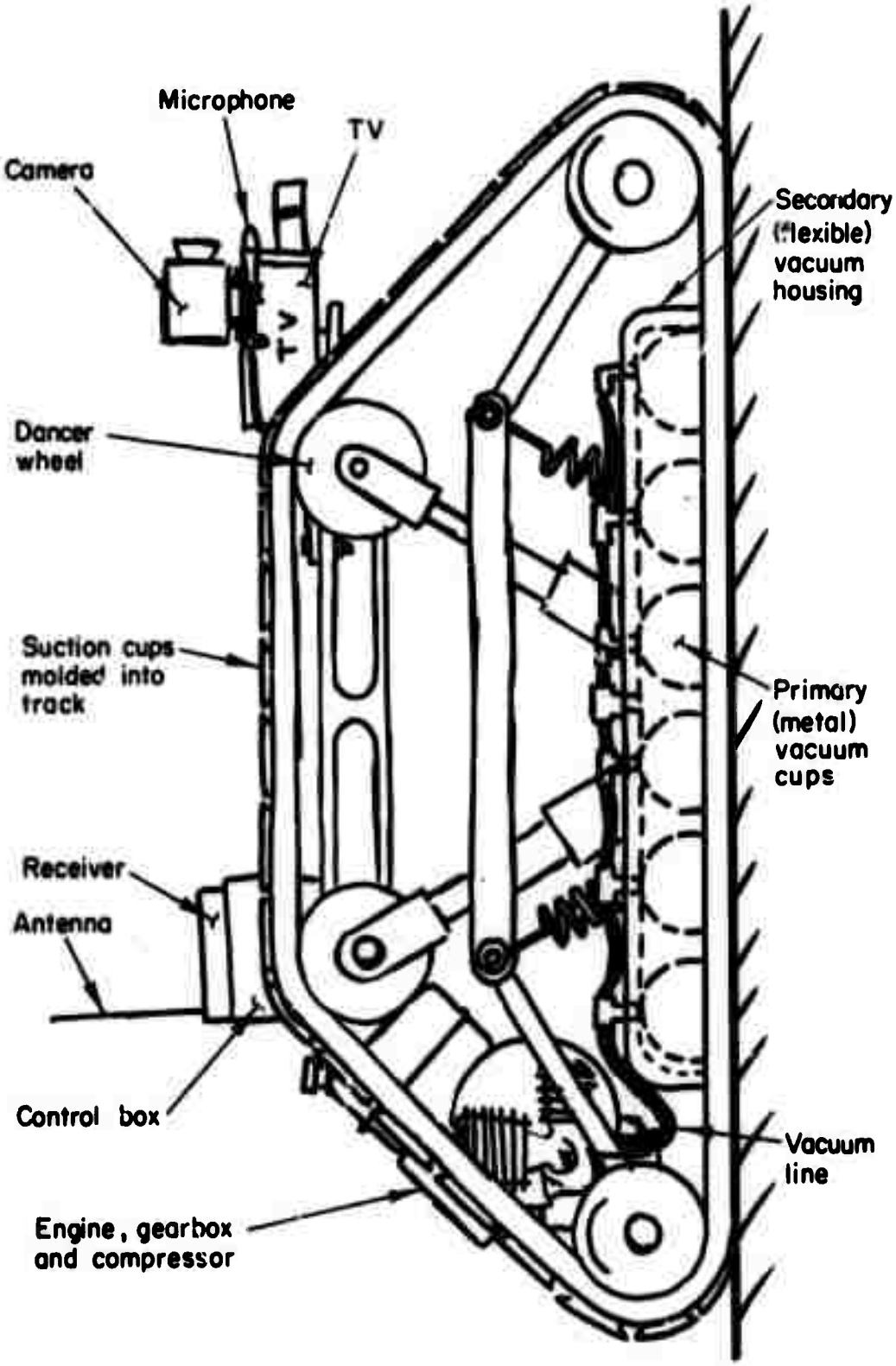

FIGURE C-16. SUCTION-CUP-FITTED TRACKED CLIMBER

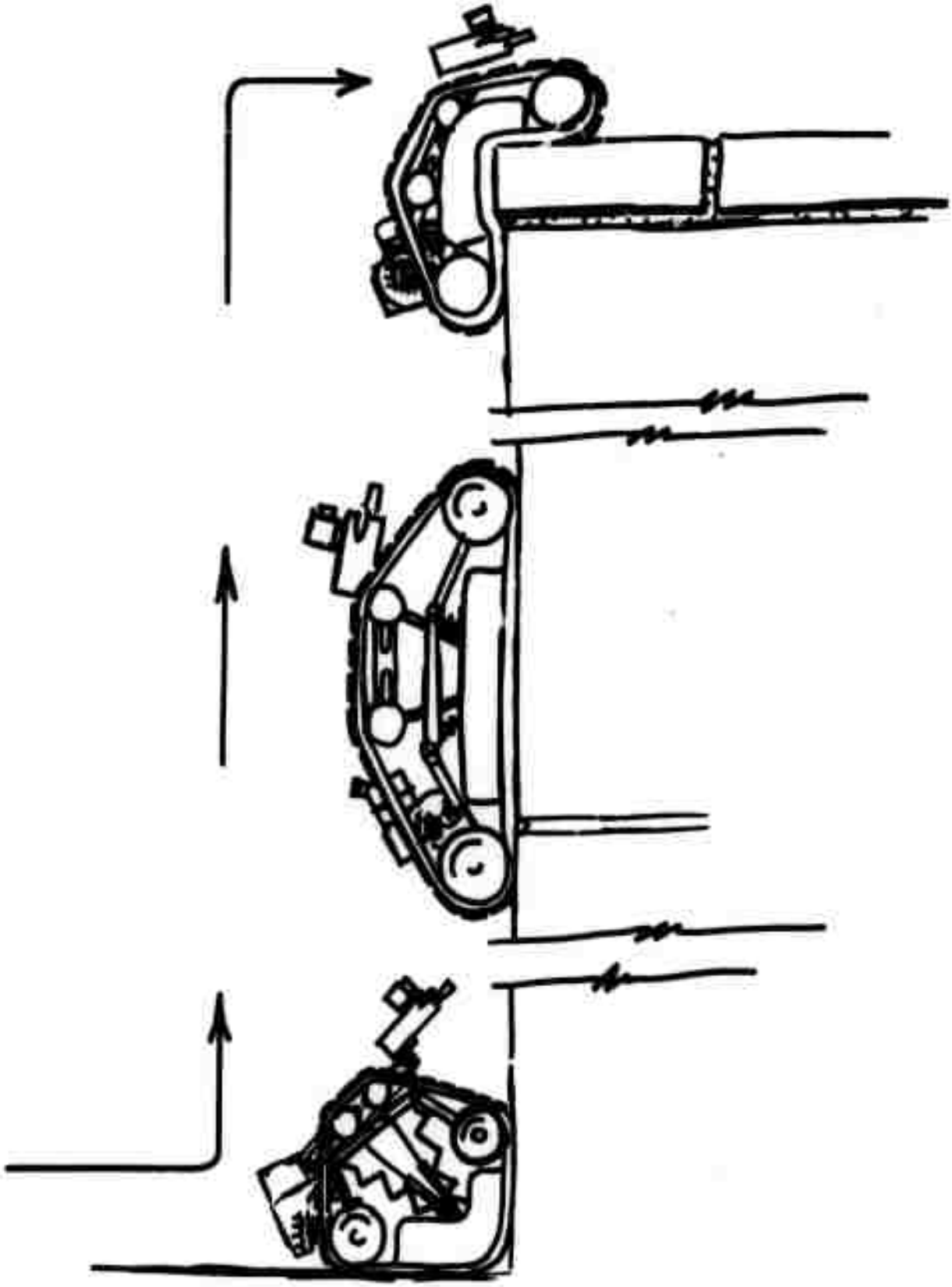

FIGURE C-17. CONCEPTUALIZATION OF CLIMBER IN ACTION

FIGURE C-18. REMOTELY CONTROLLED, SATL POWERED WARHEADS

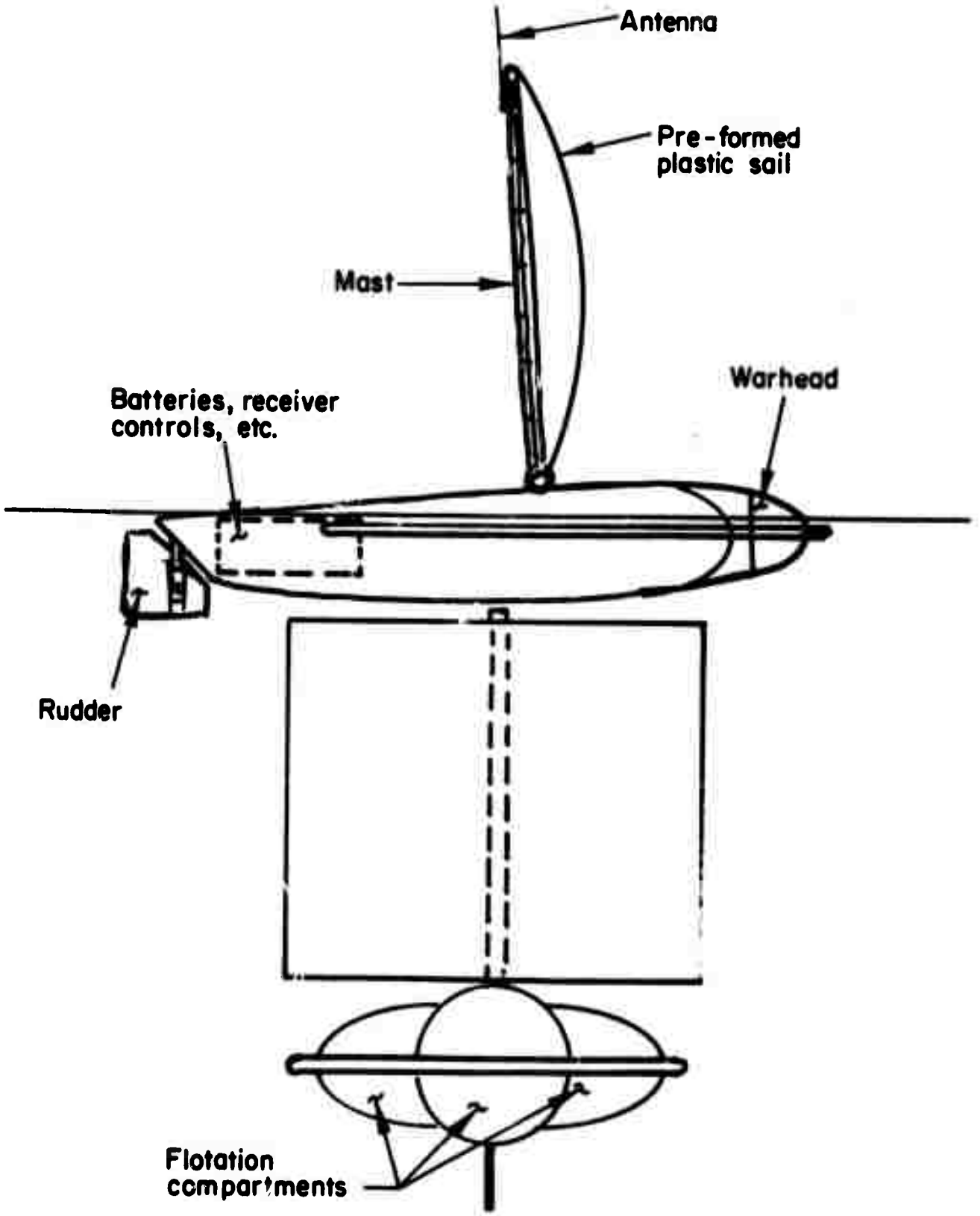

FIGURE C-19. CONCEPTUAL VIEW OF AN R/C SAIL-POWERED WARHEAD

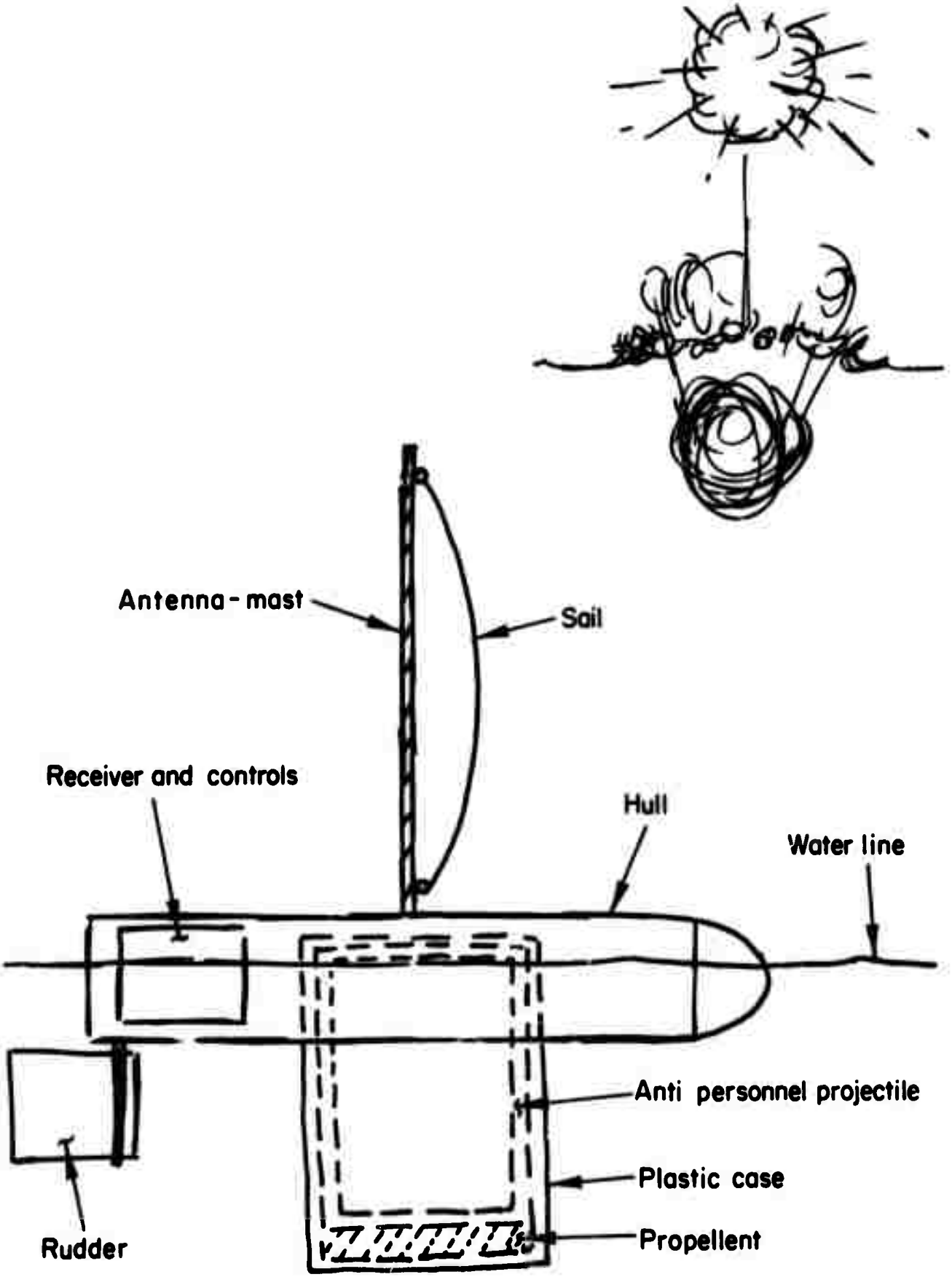

FIGURE C-20. CONCEPTUAL VIEW OF AN R/C SAIL-POWERED WATER VEHICLE WITH INCORPORATED ANTI-PERSONNEL PROJECTILE

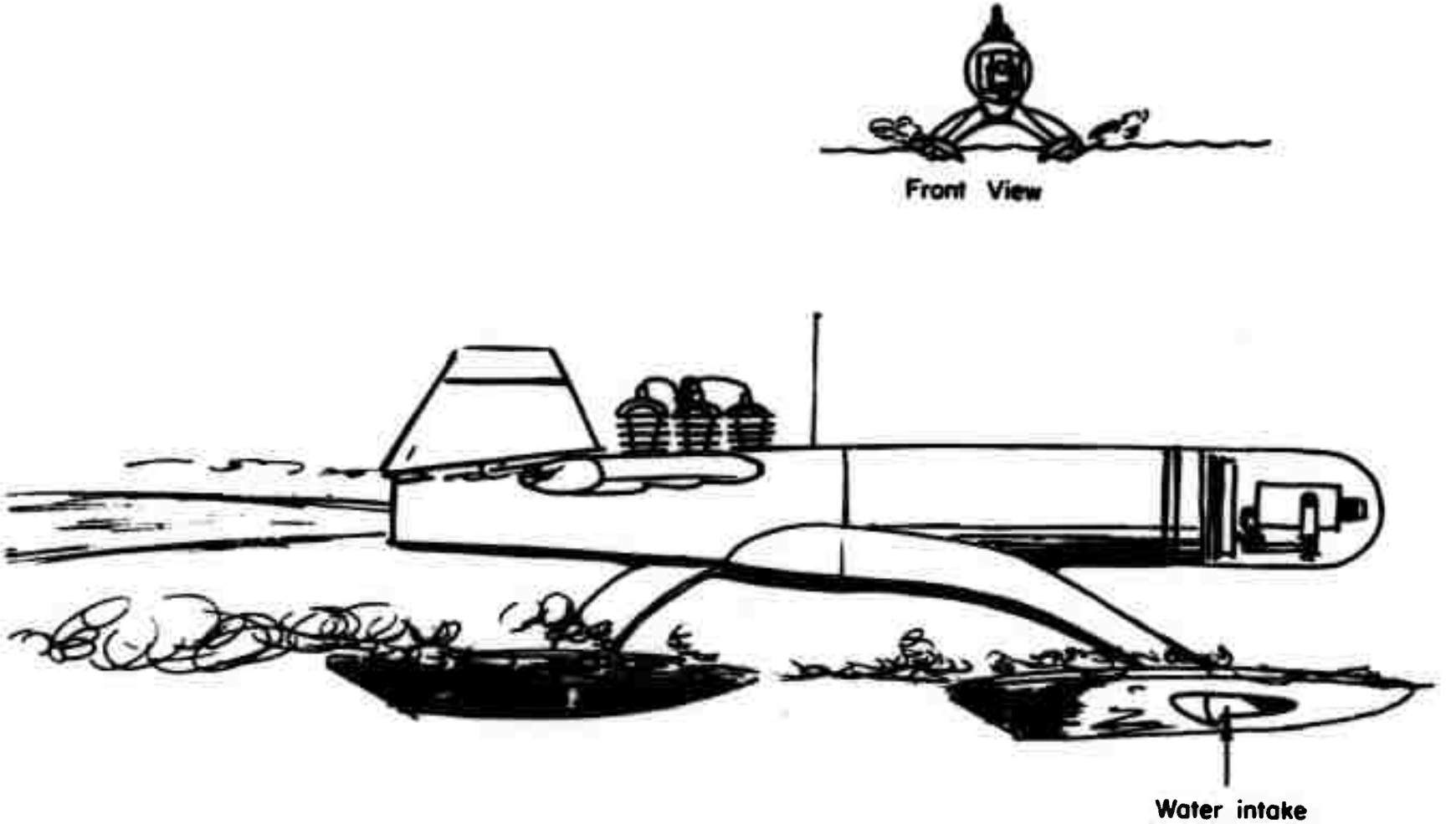

FIGURE C-21. HIGH-SPEED, REMOTELY CONTROLLED BOMB ON HYDROFOILS -- POWERED BY WATER JET

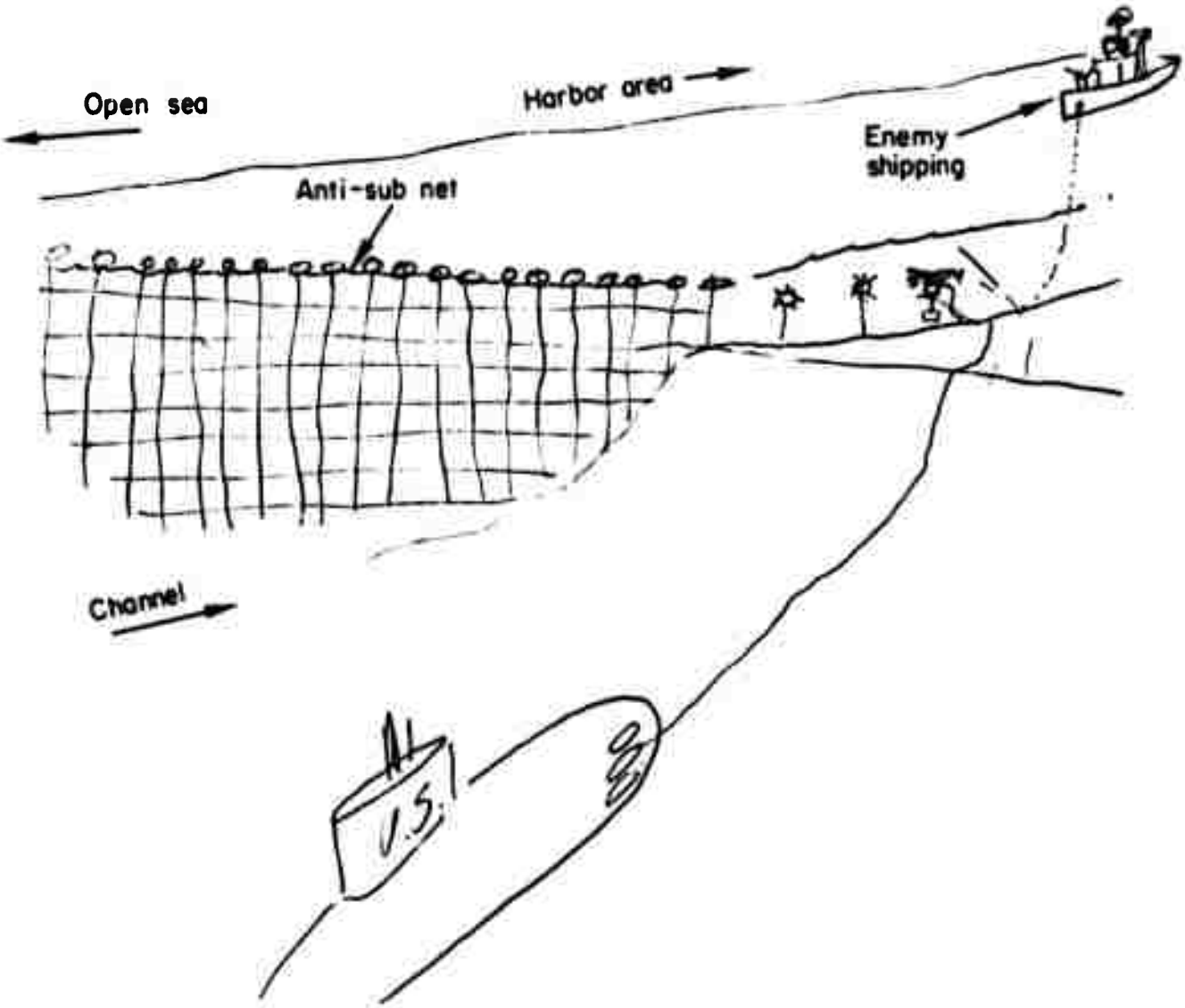

FIGURE C-22. MINE LAYING SYSTEM

The main advantage of this system is that the harbor can be mined in secret. No aircraft or surface ships have to be used. Since the sub will not have to surface or cut the net, the enemy will have no warning until ships start to sink. Placing mines this way is accurate; also, fewer are needed.

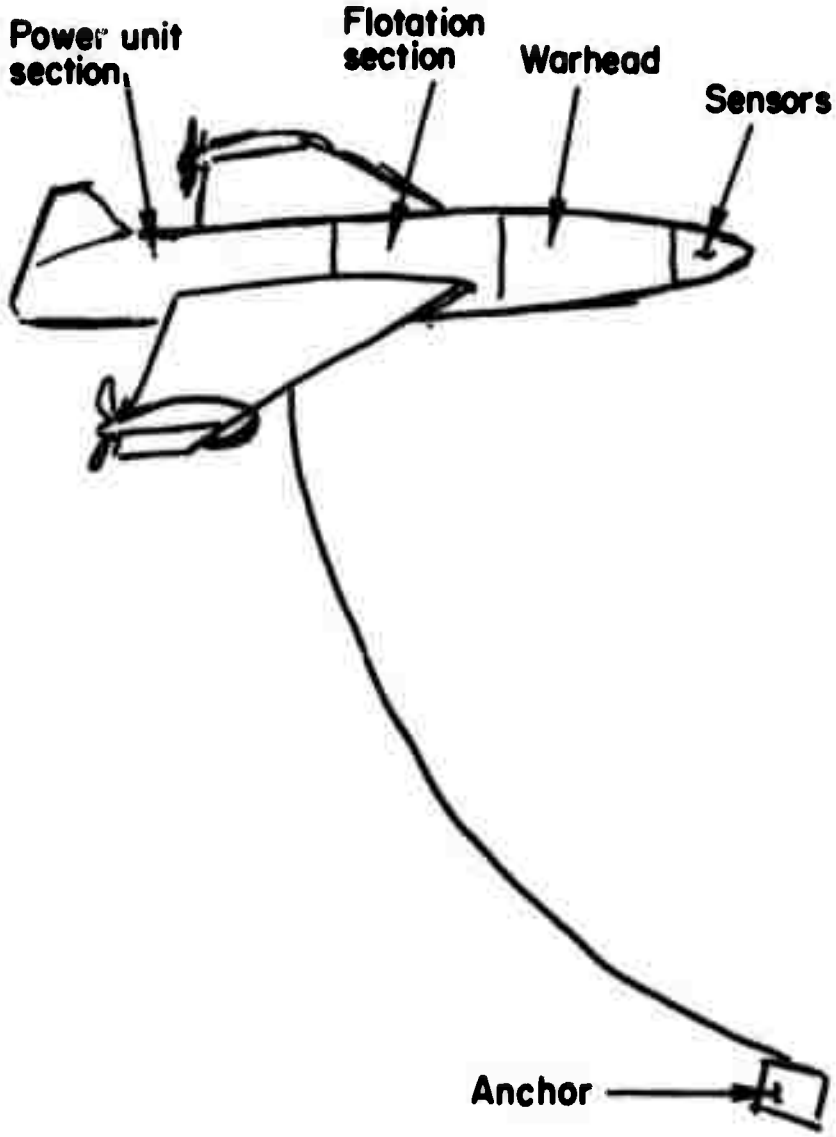

FIGURE C-23. SELF-PROPELLED MINE WITH SWIMMING RANGE OF ABOUT 1 MILE

This mine will lie in wait for periods up to 3 to 6 months. The sound of ships' screws activates systems when in range. When activated, the mine cuts its cable and attacks the sound.

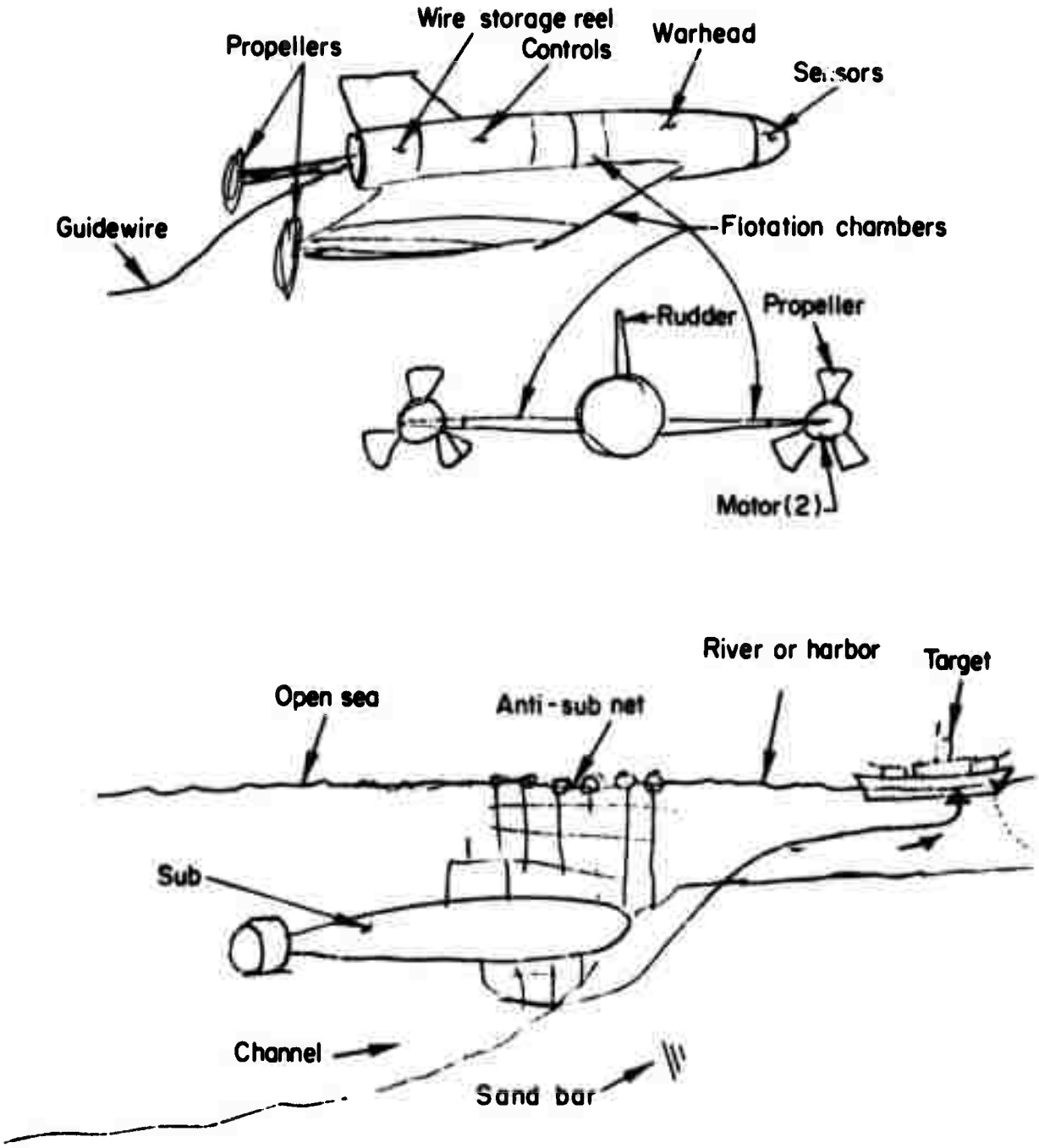

FIGURE C-24. KILLER VERSION

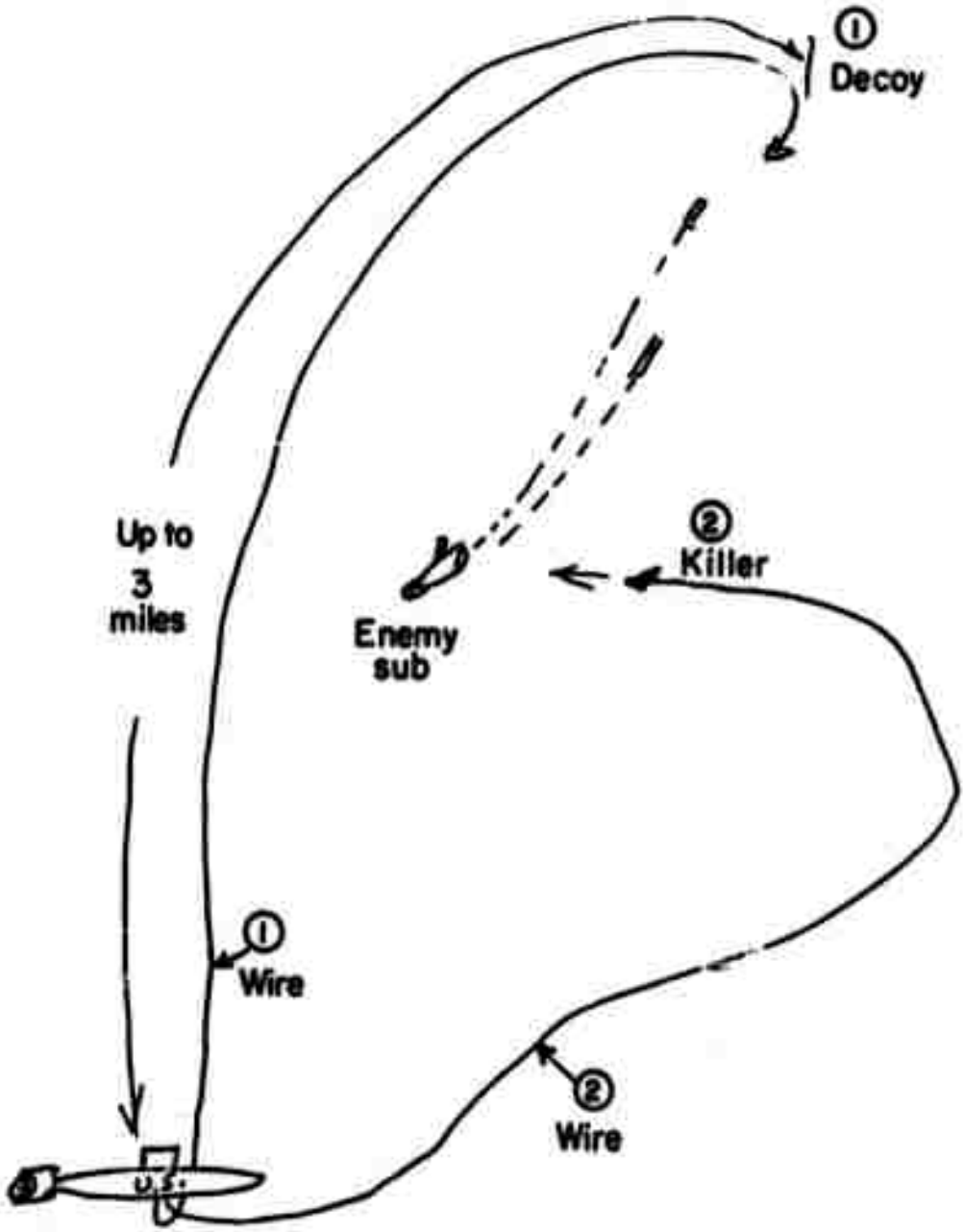

FIGURE C-25. ANTI-SUBMARINE WARFARE APPLICATIONS

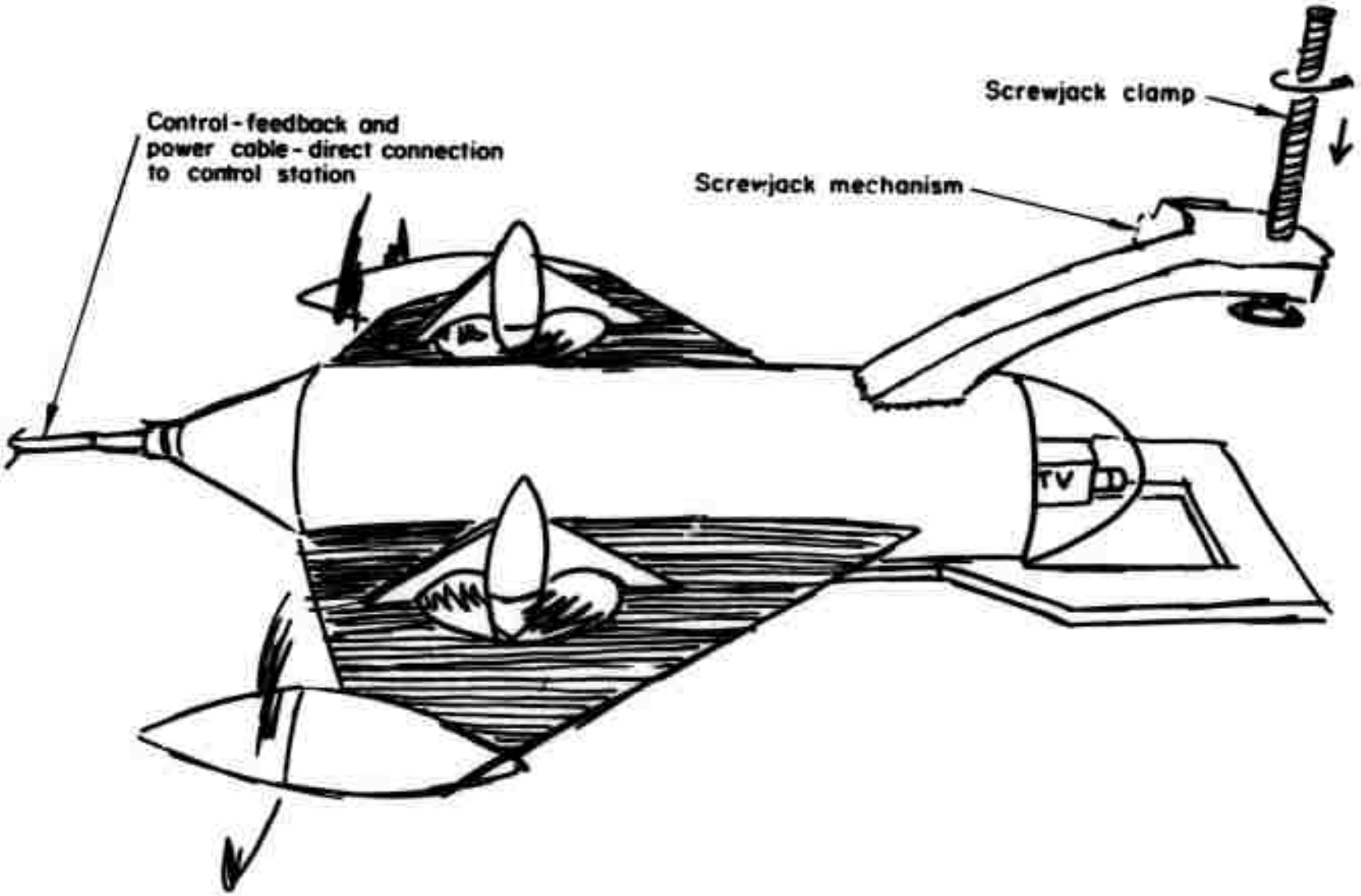

FIGURE C-26. SELF-ATTACHING BOMB TO BE DETONATED AFTER A PREDETERMINED INTERVAL

FIGURE C-27. POSSIBLE ATTACHING POINTS ON THE STERN SECTION OF A SHIP

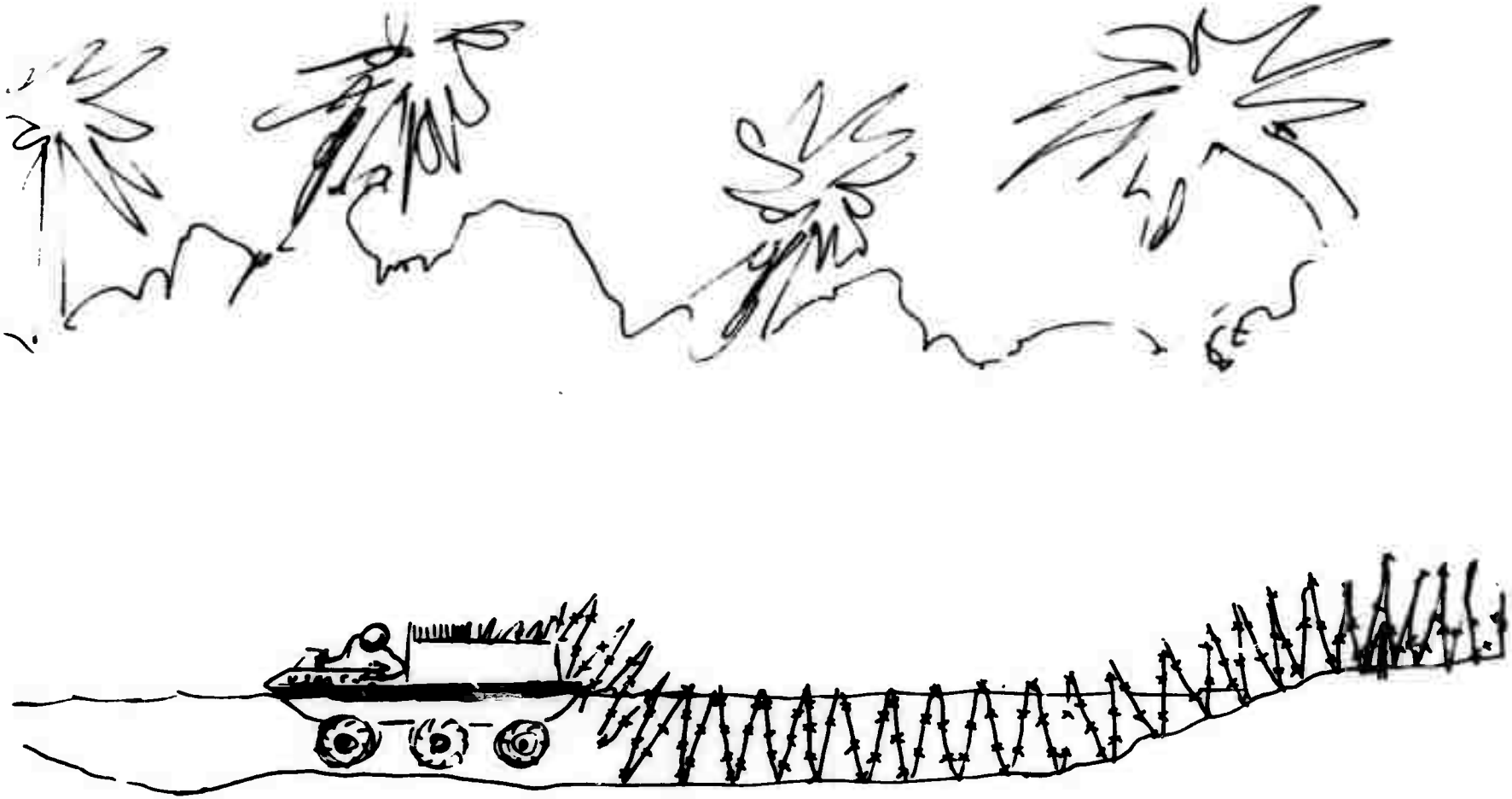

FIGURE C-28. BARBED WIRE DISPENSER (SHALLOW STREAMS OR LAKES)

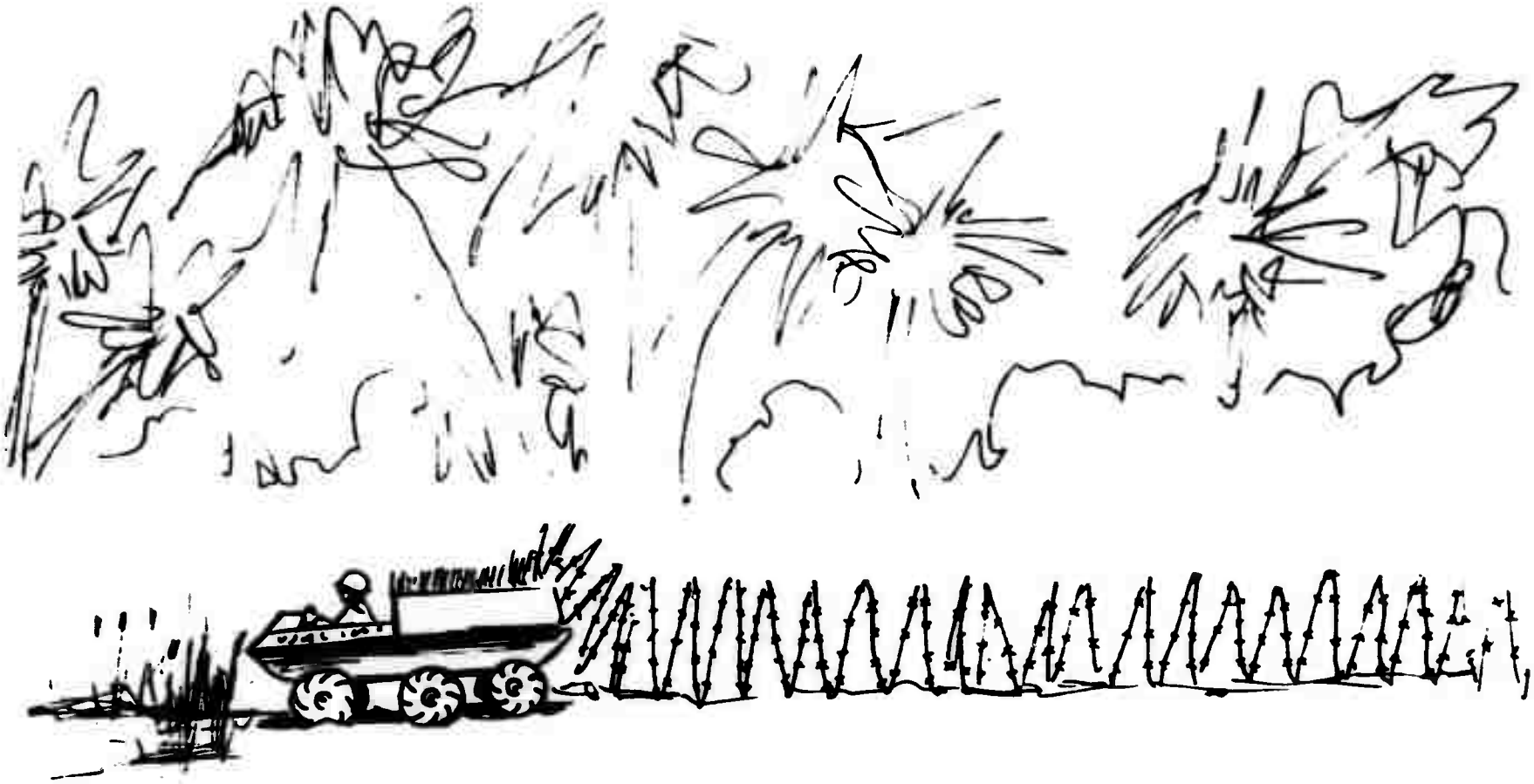

FIGURE C-29. BARBED WIRE DISPENSER (ON LAND)

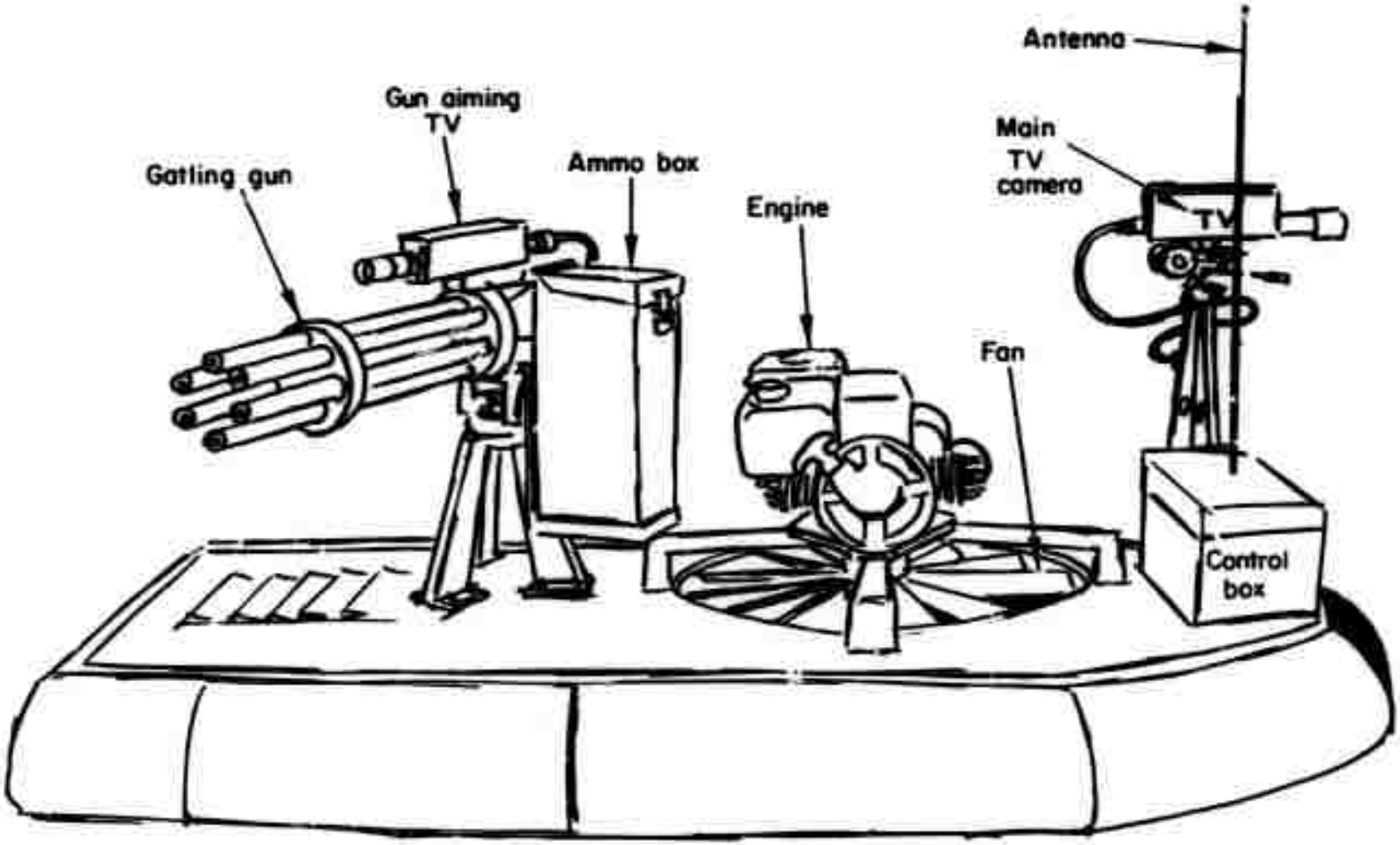

FIGURE C-30. AIR CUSHION VEHICLE

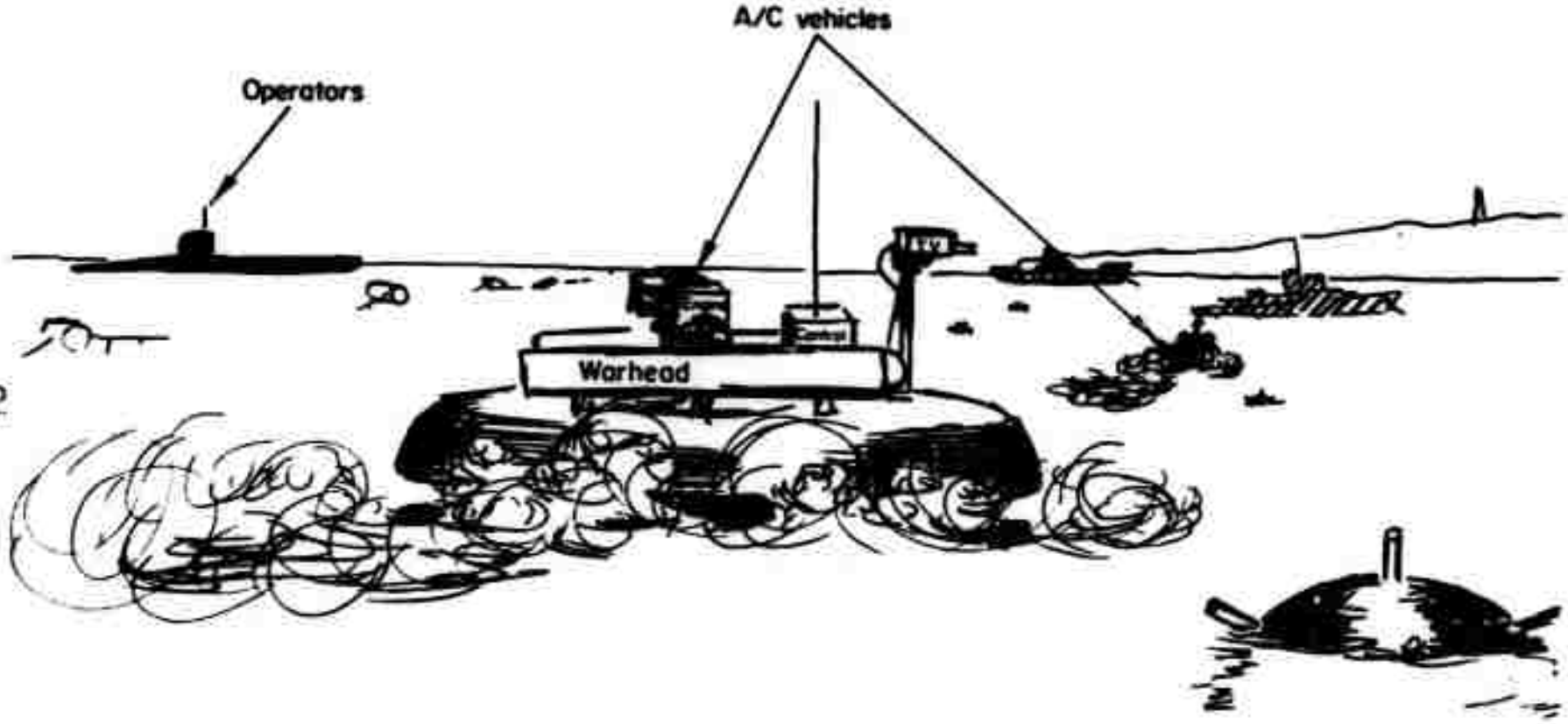

FIGURE C-31. USE OF AIR CUSHION VEHICLES FOR ATTACK

Here, the harbor is protected by an anti-submarine net and mines. The submarine attacks enemy ships with air cushion vehicles, which pass over the net and mines.

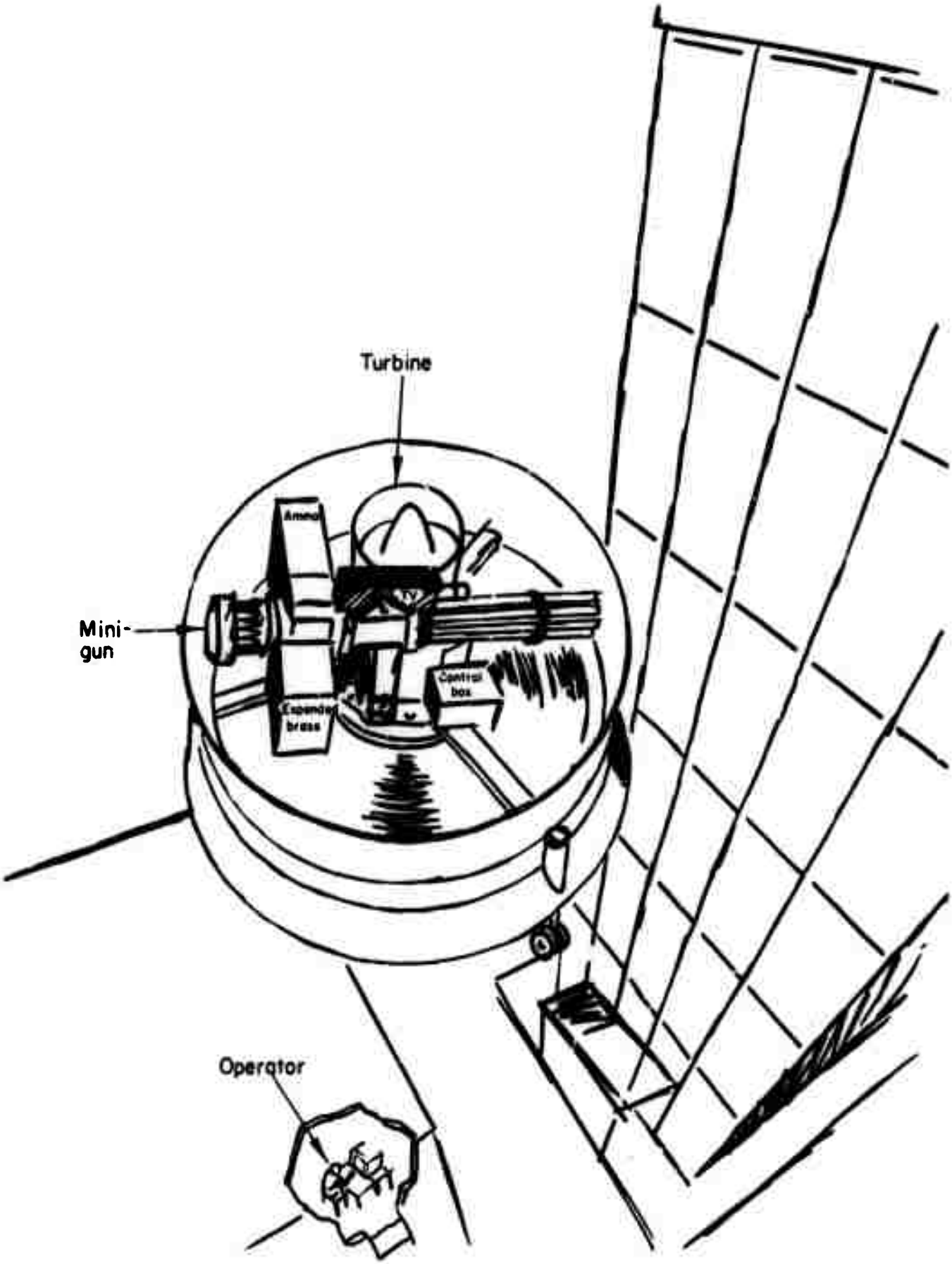

FIGURE C-32. FLYING TUB

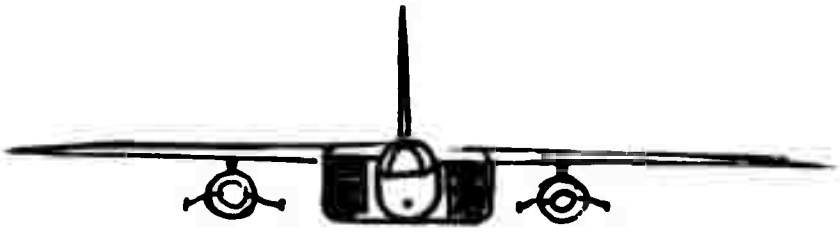

(1) Front view of aircraft equipped with two para-raft stores under wings

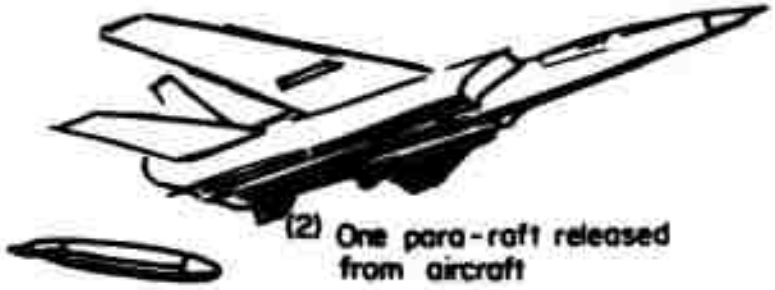

(2) One para-raft released from aircraft

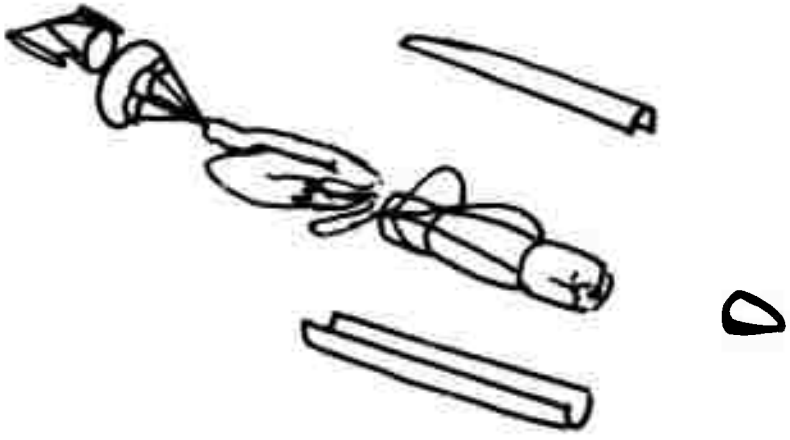

(3) At predetermined altitude pod opens, freeing para-raft; drogue chute opens

(4) Main chute opens

FIGURE C-33. AIR-SEA RESCUE UTILIZING PARA-RAFTS

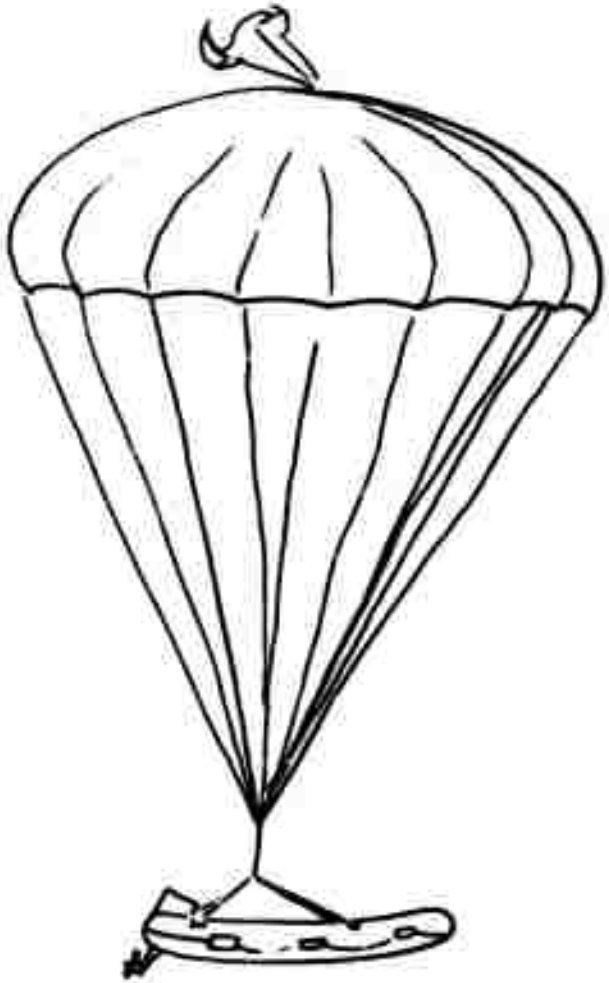

(5) Raft inflates

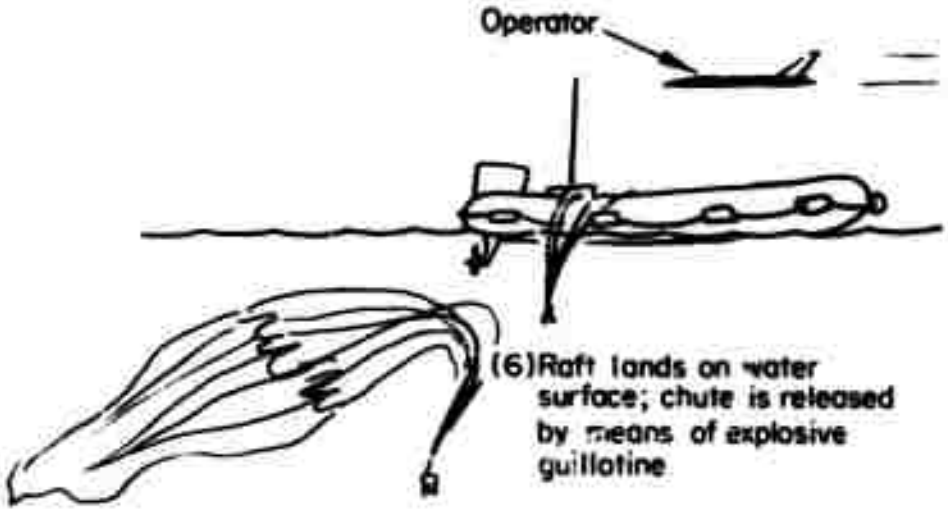

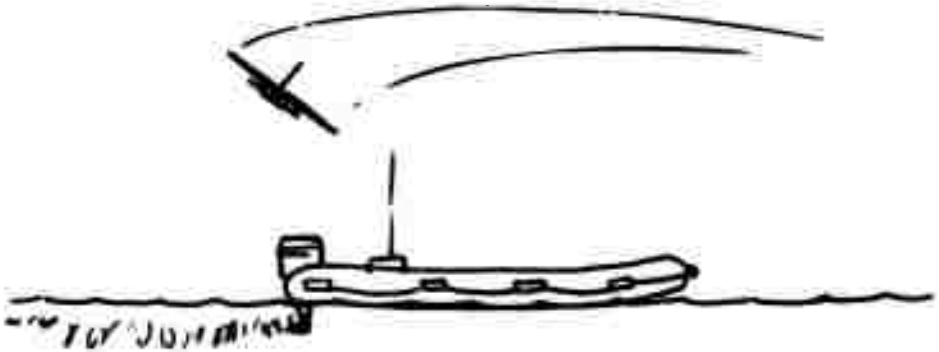

(7) Controlled from aircraft, the engine is started and the raft is steered to desired location

FIGURE C-33. (CONTINUED)

(8) Air-sea rescue

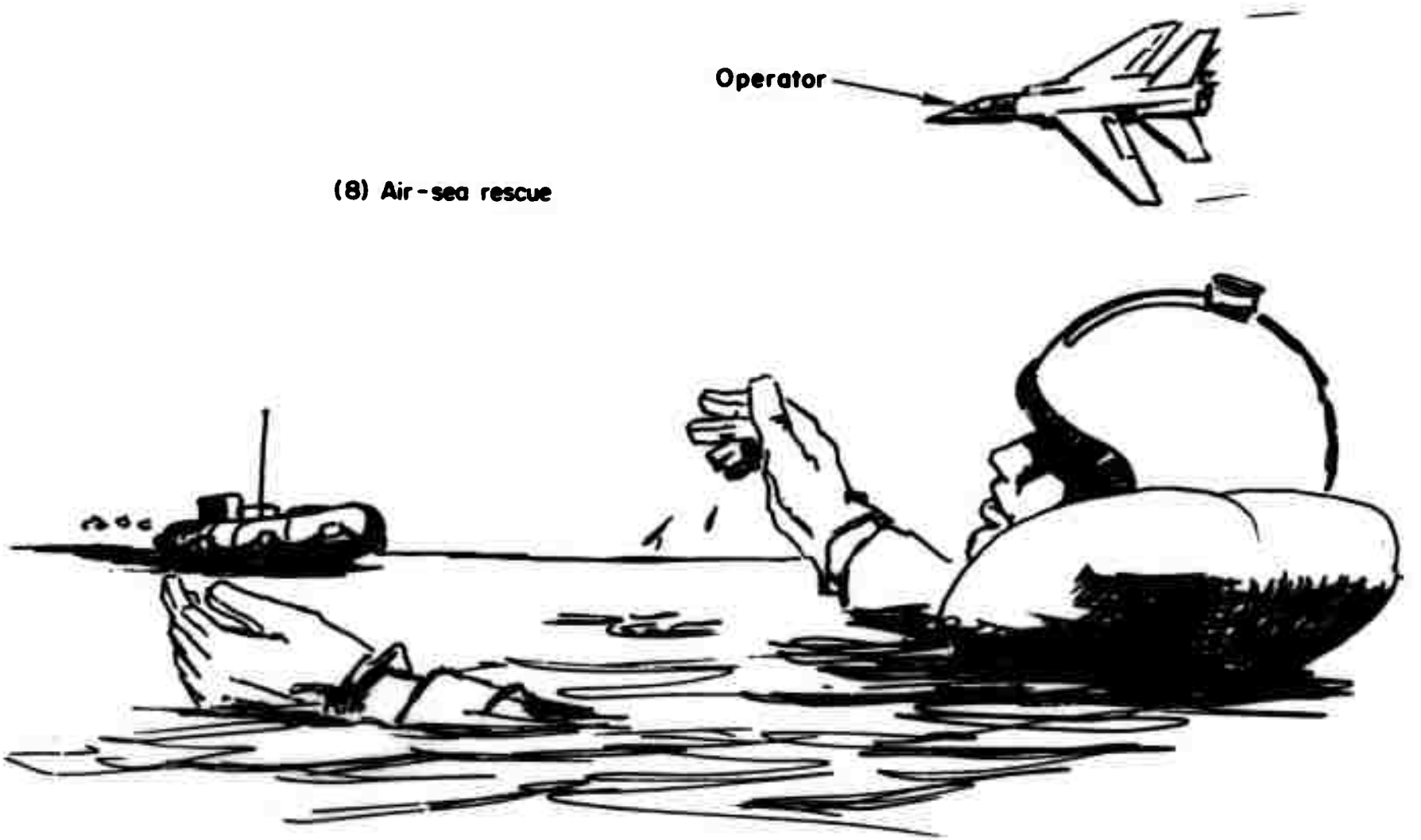

FIGURE C-33. (CONTINUED)

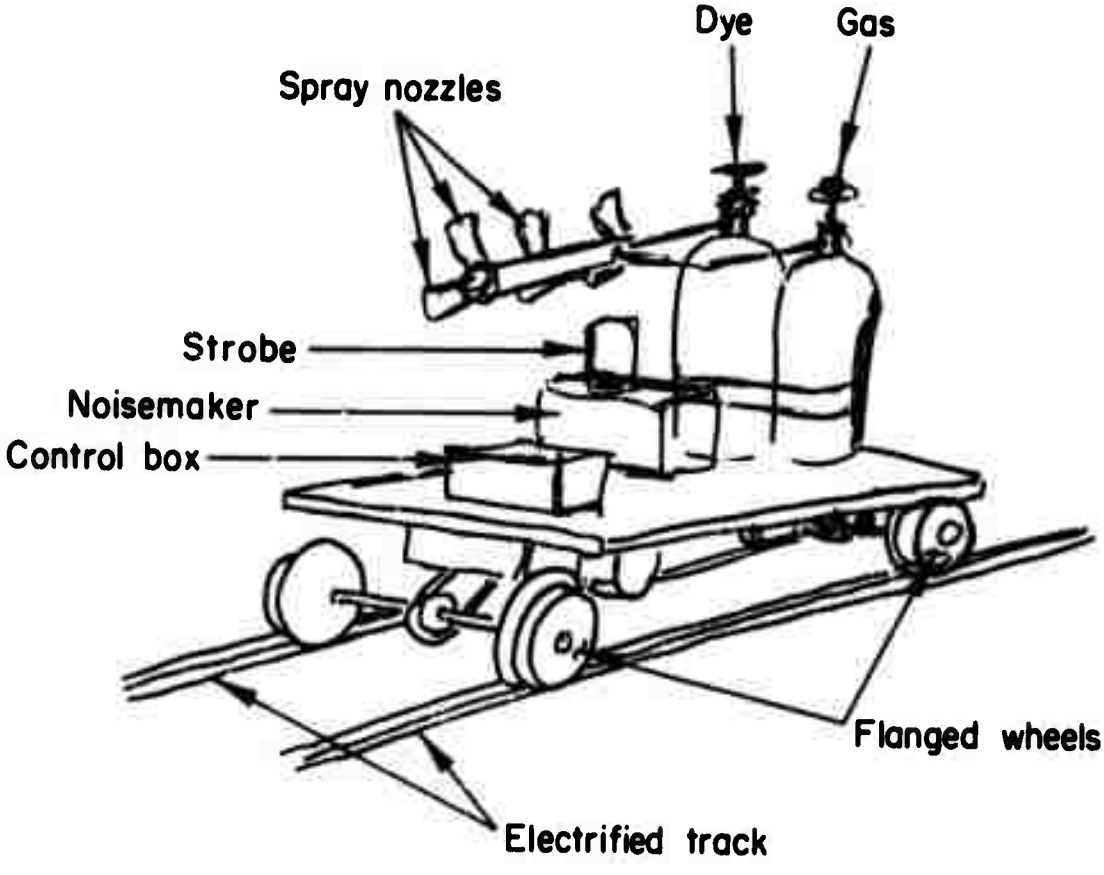

FIGURE C-34. GUARD DOG

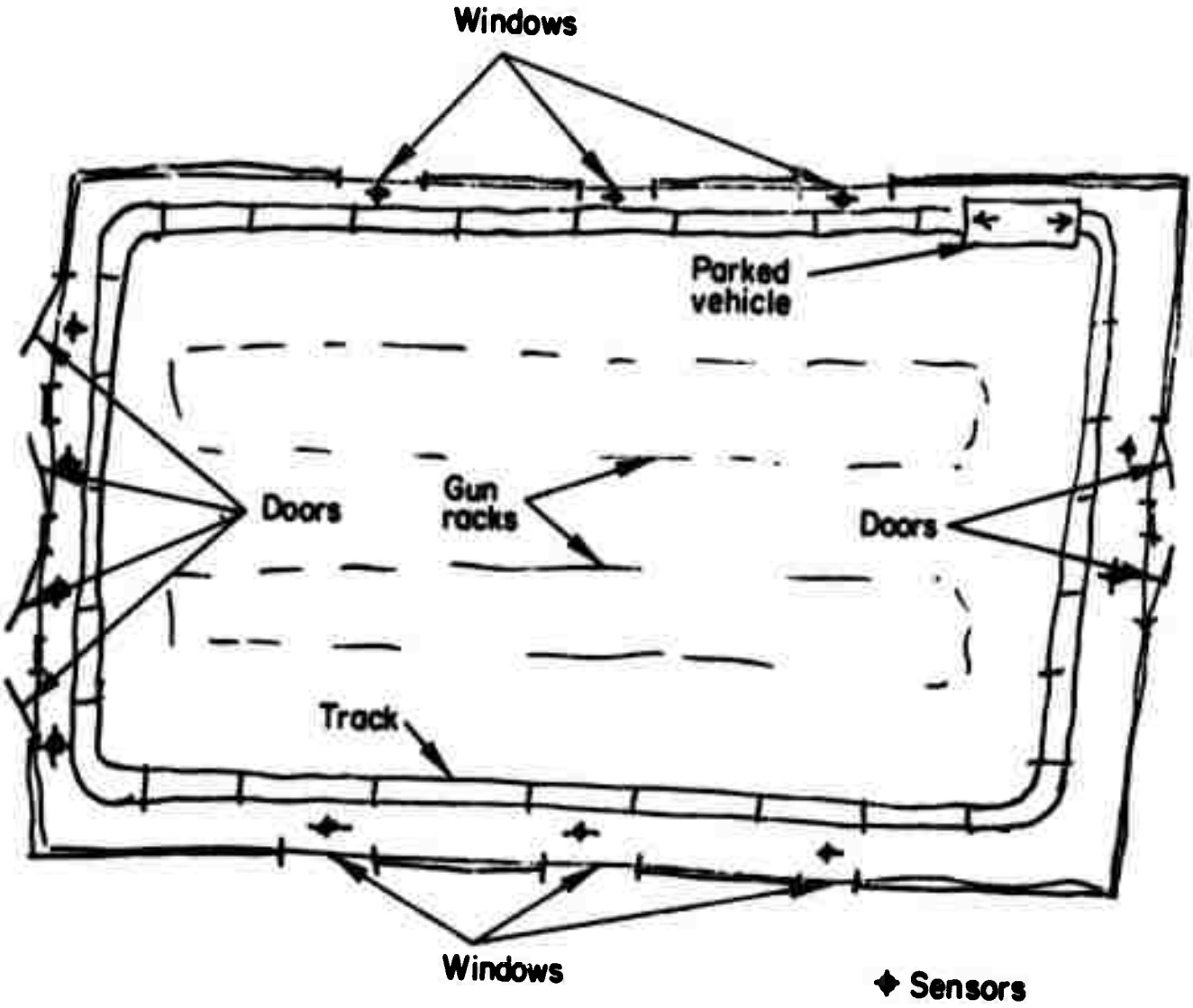

Possible Floor Plan of Gun Room in Armory

FIGURE C-35. CONCEPTUALIZATION OF USE OF GUARD DOG

- For use in armories, warehouses, schools, recreation centers, department stores, etc.
- Rides on tracks; electrical power picked up from tracks; auxiliary power provided in vehicle
- Track can be permanently installed in floor or laid on floor in temporary installations
- Repelling agents, gas, dyes, foul-smelling chemicals, whistles, lights, gun firing blank cartridges.

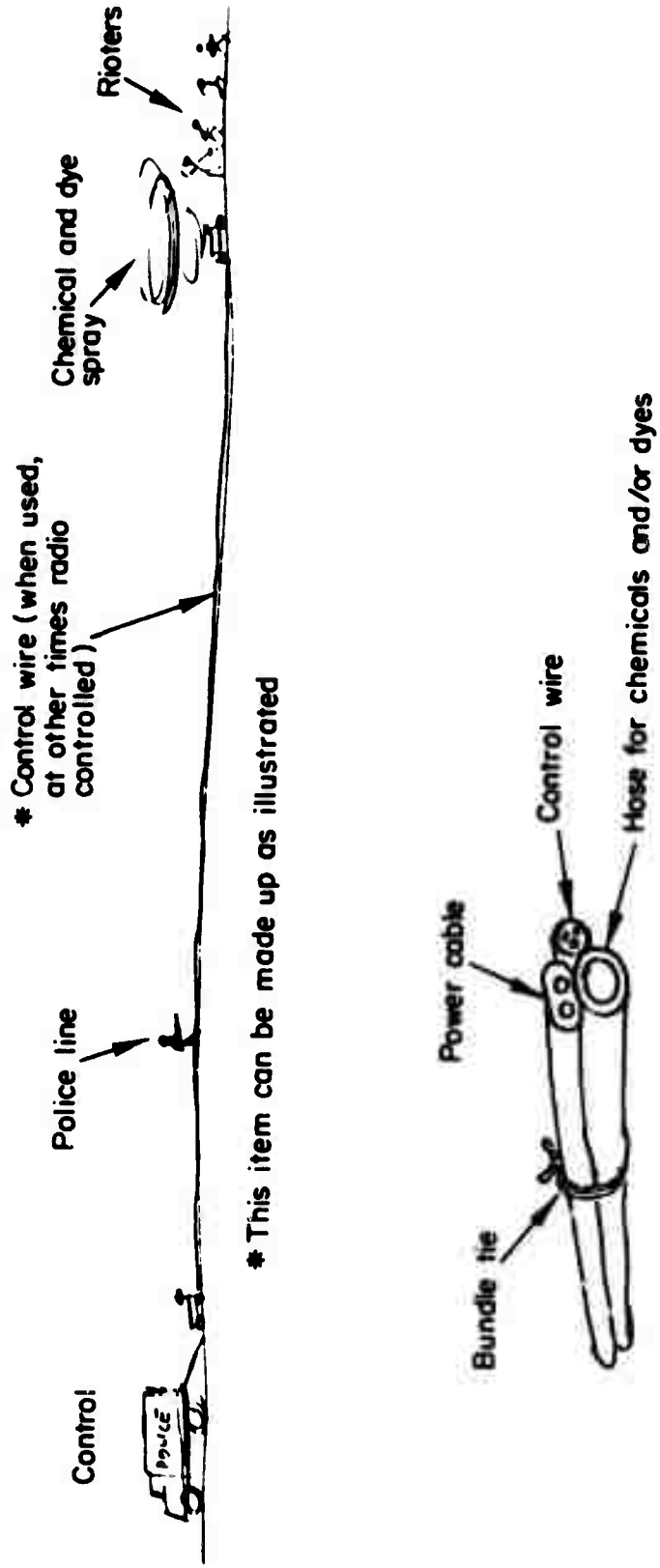

FIGURE C-36. R/C CHEMICAL AND DYE SPRAY PACKAGE

APPENDIX D

TABULAR SUMMARY OF VEHICLE AND COMPONENT CHARACTERISTICS

APPENDIX D

TABULAR SUMMARY OF VEHICLE AND COMPONENT CHARACTERISTICS

The tables presented in this appendix give data taken from information on vehicles and components received during the course of this study. Material gathered for the state-of-the-art survey included manufacturers' brochures; letters from Government and industry; books, periodicals, journals, patents, reports, and magazines; photographs; technical drawings; and specification sheets. Data amenable to reduction to tabular form were selected from the material received, and are presented herein under two basic categories: vehicles (Tables D-1 through D-9) and components (Tables D-10 through D-26).

Tables D-1 through D-3 cover ATV's with IC engines, electric drive, and IC-powered snowmobiles, respectively. Land vehicles having IC engines and those powered electrically are summarized in Tables D-4 and D-5. Data on water vehicles with IC engines, electric drive, and miscellaneous propulsion systems, respectively, are given in Tables D-6 through D-8. Internal-combustion-powered ACV's are covered in Table D-9.

Tables D-10 and D-11 give data on power sources, specifically engines and batteries/storage cells. The drive train is covered in Tables D-12 through D-14, where details are given on transmissions, variable motor drives, and torque converters, respectively. The remaining tables encompass information obtained on guidance and control systems. Table D-15 covers transmitters; Table D-16, rate gyros and switches; Table D-17, DC to AC converters; Table D-18, variable speed controls; Table D-19, potentiometers; Table D-20, DC motors; and Table D-21, generators. Data for five different sizes of solenoids are given in Tables D-22 through D-26.

TABLE D-1. SUMMARY OF CHARACTERISTICS OF ALL-TERRAIN VEHICLES (INTERNAL COMBUSTION POWERED)[a]

Model	Manufacturer	Engine				Transmission	Suspension	Overall Dimensions, in.			Weight, lb	Additional Information
		Make	Type	HP	Displacement, cc			Length	Width	Height		
AMF Sur-Trek	AMF Western Tool Div.	JLO	2 cy	20	295	2 fwd, 1 rev	2-psi tires	126	50	37	750	$2195
Amphicat ATV	Mobility Unlimited	Sachs	2 cy	16	277	2 fwd, 1 rev	Soft tires	81	54	33	515	$1595
Argo 6	Ontario Drive & Gear	Kohler	2 cy	28	399	2 fwd, 1 rev	2-psi tires	95	57.5	37.5	575	$1645
Attex SR/300 D	ATV Mfg. Co.	JLO	2 cy	20	300	1 fwd, 1 rev	Soft tires	82.5	53	36	450	$1595
Attex ?	ATV Mfg. Co.	JLO	--	--	340	1 fwd, 1 rev	Soft tires	82.5	53	36	--	--
Attex ?	ATV Mfg. Co.	CCW	--	--	400	1 fwd, 1 rev	Soft tires	82.5	53	36	--	$1675
Attex ?	ATV Mfg. Co.	CCW	--	--	225	1 fwd, 1 rev	Soft tires	82.5	53	36	--	--
Attex ?	ATV Mfg. Co.	Briggs & Stratton	--	8	--	1 fwd, 1 rev	Soft tires	82.5	53	36	--	$ 995
Bazooo	Otaco Ltd.	CCW	2 cy	12.5	225	1 fwd, 1 rev	1.5-psi tires	86	52.5	32	450	$1595
Busse A. T. Wagen	Busse Bros. Inc.	Volkswagen	--	55	1600	4 fwd man/3 fwd semi-auto, 1 rev	4-psi tires	126	72	72	1700	$4875
Camel Centipede	Camel Mfg. Co.	JLO	2 cy	19.5	--	? fwd, 1 rev	2-psi tires	80.5	54.5	33.5	575	$1495
Camel Centipede Mach II	Camel Mfg. Co.	Borg-Warner	2 cy	19	295	1 fwd, 1 rev	2-psi tires	81	54.5	33	498	$1395
Carrier, 500 lb	--	--	--	7	--	1 fwd, 1 rev	--	74	35	25	500	U.S. Army
Carrier, 1/2 ton	--	--	--	15	--	--	--	118	50	--	925	U.S. Army
Carrier, 2000 lb	--	--	--	40	--	2 fwd, 1 rev	--	122	56	33	2000	U.S. Army
Catagator 6	Catagator Corp.	Kohler or Onan	4 cy	20	--	1 fwd, 1 rev	Rigid	95	59	35	1500	$2295
Chaparral	Chaparral Industries	JLO	2 cy	20	295	1 fwd, 1 rev	1.5-psi tires	96	55	36	470	$1695
Coot	Frigiking Div.	Tecumseh	4 cy	12	453 (27.66 ci)	2 fwd, 1 rev	4-psi tires	91	64	36	1100 or 1160	2- or 4-wheel steering
Coot 124SS	Coot Inc.	Tecumseh	4 cy	20	453 (27.66 ci)	2 fwd, 1 rev	Soft tires	90	64	36	910	$1695
Dura-Kat Scooter	Dura Corp.	--	--	18	--	3 fwd, 1 rev	--	84	48	34	1200	--
Eagle	Standard Eng.	Tecumseh	4 cy	12	453 (27.66 ci)	2 fwd, 1 rev	10-psi tires	94	64	50	1350	$1872

TABLE D-1. SUMMARY OF CHARACTERISTICS OF ALL-TERRAIN VEHICLES (INTERNAL COMBUSTION POWERED)[a] (continued)

Model	Manufacturer	Engine				Transmission	Suspension	Overall Dimensions, in.			Weight, lb	Additional Information
		Make	Type	HP	Displacement, cc			Length	Width	Height		
Ferret	Arnold Mfg. Co.	Kohler	--	14 or 18	--	--	--	89	48 or 72	39	1150	Tractor
Gama Goat	--	--	--	80	--	--	--	200	80	82	3700	U.S. Army
Got'cha 4000	Action-Age Inc.	Briggs & Stratton	4 cy	8	319 (19.44 ci)	1 fwd	2-ply tires	85	54	36.5	400	$ 995
Honda U.S. 90	American Honda	Honda	4 cy	7	89	8 speed	2-psi tires	61.8	37.4	34.6	196	$ 590
Hurricane	--	JLO	--	20	295	1 fwd, 1 rev	High flotation tires	93	35	--	690	--
Hustler	Hustler Corp.	CCW	2 cy	25	340	2 fwd, 1 rev	Soft tires	94	54	36	635	$1795
Jiger Twin Six	Breton Versatrek	Hirth	2 cy	12.5	246	Hydrostatic	High flotation tires	78	52	44	450	$1295
Jiger	Breton Versatrek	Kohler	--	20.5	295	Hydrostatic	High flotation tires	78	52	44	--	$1395
Karou 225	Karou Inc.	CCW	2 cy	13	225	1 fwd, opt'l rev	2-psi tires	84	53	34	395	$1395
Karou 2	Karou Inc.	CCW	2 cy	20	--	1 fwd, opt'l rev	2-psi tires	84	53	34	--	--
Kid	Kinetics Int'n'l. Div.	Wisconsin VH4-D	4 cy	30	1770 (108 ci)	Twin hydro-static	Rigid	96	60	35	2200	$3217
Lockley ASV 295	Lockley Mfg. Co.	JLO	2 cy	22	295	Salsbury, opt'l rev	2-psi tires	96	50	39	360	$1295
Max ATV	Recreatives Inc.	JLO	2 cy	20	297	Borg-Warner skid steer	2-psi tires	86	56	37	525	$1545
MFX 4000	Massey-Ferguson	VW	--	55	--	--	--	--	--	--	--	--
Mini Brute	Feldmann Eng. & Mfg.	Chrysler	2 cy	8	134	2 fwd, 1 rev	2-psi tires	79	46.5	38	320	$ 895
Mini Brute	Feldmann Eng. & Mfg.	--	--	11.5	180	2 fwd, 1 rev	2-psi tires	79	46.5	38	--	--
Newt the Bold	Challenger Corp.	JLO	2 cy	24	440	1 fwd, 1 rev	1-psi tires	96.5	66.5	40.8	820	$1850
Newt the Bold	Challenger Corp.	Lawson	4 cy	12	--	--	--	--	--	--	--	$1795
Otter	John D. Alger	--	4 cy	12.5	--	1 fwd, 1 rev	Soft tires	--	--	--	400	$1000
Passe Par Tout 340	Valcartier Indust.	Sachs	2 cy	22.5	336	1 fwd, 1 rev, opt'l 2 fwd	Bogies & pneumatic wheels	96	47.7	50	750	--

TABLE D-1. SUMMARY OF CHARACTERISTICS OF ALL-TERRAIN VEHICLES (INTERNAL COMBUSTION POWERED)[a] (continued)

Model	Manufacturer	Engine				Transmission	Suspension	Overall Dimensions, in.			Weight, lb	Additional Information
		Make	Type	HP	Displacement, cc			Length	Width	Height		
Ridge Runner ASV	Ridge Runner Inc.	Kohler	2 cy	33	618	1 fwd, 1 rev	Bogie wheels	112	45	57	800	$2195
Roughrider	McKee Bros. Ltd.	JLO	2 cy	14	230	1 fwd, opt'l rev	2-psi tires	83	52	37.5	370	$1475
RUC	--	Chrysler	V-8	380	7212 (440 ci)	Chrysler auto, 2 fwd, 1 rev	Spiral rotors	242	168	137	8920	Riverine Utility Craft
Ruppster Baja 230	Rupp Industries, Inc.	JLO	2 cy	--	230	Torque converter	4-psi tires	71	48	34	--	--
Sierra Trail Boss	Vesely Co.	Kohler	2 cy	20	309	1 fwd, 1 rev	Low pressure tires	89	57	36	665	$1495
Snow Eagle ATV-600	McCormack	Hirth	2 cy	39	634	1 fwd, opt'l rev	Bogies & synthetic rubber tracks	80	--	--	410	$1395
Spoiler 700 & 700E	Speedway Products, Inc.	Tecumseh	--	7	246	2 fwd	Low pressure tires	80	48	30	317	--
Sportster ATV	Roper Corp.	JLO	2 cy	19	292	1 fwd, 1 rev	Low pressure tires	95.5	54	32	675	$1695
Spyder	Scorpion, Inc.	CCW	2 cy	21	340	1 fwd, 1 rev	Leaf springs	92	50	45	685	$1195
Stalker	Ski-Tow Mfg. Co.	Tecumseh	4 cy	12	--	1 fwd, 1 rev	2-psi tires	93	63	36	490	$1595
Terra Jet 300	Terra Jet Inc.	Kohler	2 cy	20	295	Albion	Soft tires	106	54	43	825	$1485
Terra Tiger 10	Allis-Chalmers	JLO	2 cy	10	246	Torque converter	2- to 3-psi tires	86	54	37	525	$1375
Terra Tiger 18	Allis-Chalmers	JLO	2 cy	19	291	--	2- to 3-psi tires	86	54	37	--	$1575
Tracker	Alsport	--	--	24	395	? fwd, rev	--	--	--	--	--	--
Trackster	Cushman Motors	OMC	2 cy	25	437	1 fwd, 1 rev	Bogie wheels	92	62	41	1040	$2880
Trail King Diablo	Quality Axle Mfg.	Briggs & Stratton	4 cy	8	319 (19.44 ci)	Salsbury auto, opt'l rev	2-psi tires	90	54	33	240	$ 895
Tricart	Sperry Rand Corp.	JLO	2 cy	11	230	Fwd	4-psi tires	59	52.5	32	225	$ 750
Water Skipper	Borg-Warner Corp.	Corvair	--	80	--	--	--	148	84	65	4000	--

(a) Abbreviations used:

cy = cycle
ci = cubic inch
fwd = forward
rev = reverse
man = manual
semiauto = semiautomatic
auto = automatic
opt'l = optional.

TABLE D-2. SUMMARY OF CHARACTERISTICS OF ALL-TERRAIN VEHICLES (ELECTRIC POWERED)

Model	Manufacturer	Motor			Power Source		Weight, lb	Additional Information
		Make	Type	HP	Type	Capacity		
Attex	ATV Mfg. Co.	GE	36 v	--	Pb-acid batteries	--	795	$3000
RCTV	Grumman Aerospace Corp.	--	1200 w	0.8	Zn-air batteries	1200 w (5 kwhr)	626	Remote control tactical vehicle

TABLE D-3. SUMMARY OF CHARACTERISTICS OF SNOW VEHICLES (INTERNAL COMBUSTION POWERED, SKI STEERED)

Manufacturer	Make	Model	Engine					Carburetor		Dimensions, in.				
			Make	Model	Type	HP	Displacement, cc	Make	Model/Type	Length	Width	Track Width	Weight, lb	Year
Rupp Industries Inc.	American	30hp	Rupp	--	2 cylinder	30	--	--	--	--	--	18	--	--
		40hp	Rupp	--	2 cylinder	40	--	--	--	--	--	18	--	--
		50hp	Rupp	--	2 cylinder	50	--	--	--	--	-	18	--	--
Artic Enterprises Inc.	Boss Cat	--	--	--	Turbine	400-1200	--	--	--	240	--	--	1850	--
Chaparral Industries Inc.	Chaparral	Chaparral	Hirth	55R	--	--	300	Tillotson	HD	--	--	--	--	1968
		Chaparral	Hirth	160R	--	--	372	Tillotson	HD	--	--	--	--	1968
		Firebird	Hirth	170R	--	--	300	Tillotson	HR	--	--	--	--	1968
		Chaparral	Kohler	K309-1	--	--	309	Tillotson	HR22A	--	--	--	--	1969
		Chaparral	Hirth	200R	--	--	372	Tillotson	HD7AX	--	--	--	--	1969
		Chaparral	Kohler	K618-2	--	--	618	Tillotson	--	--	--	--	--	1969
		Firebird	Kohler	K309-1	--	--	309	Tillotson	HR22A	--	--	--	--	1969
		Firebird	Hirth	200R	--	--	372	Tillotson	HD7AX	--	--	--	--	1969
		Firebird	Hirth	170R	--	--	600	Tillotson	--	--	--	--	--	1969
		Snowgoer	Kohler	K618-2	--	--	618	Tillotson	--	--	--	--	--	1969
		300	Kohler	K309-1	--	--	309	Tillotson or Keihin	--	--	--	--	--	1970
		300	Hirth	200R	--	--	372	Tillotson or Keihin	--	--	--	--	--	1970
		Firebird	Sachs	--	--	--	336	Tillotson or Keihin	--	--	--	--	--	1970
		Firebird	Hirth	210R	--	--	399	Tillotson or Keihin	--	--	--	--	--	1970
		Firebird	Hirth	211R	--	--	438	Tillotson or Keihin	--	--	--	--	--	1970
		Firebird	Hirth	220R	--	--	493	Tillotson or Keihin	--	--	--	--	--	1970
		Firebird	Hirth	171R	--	--	634	Tillotson or Keihin	--	--	--	--	--	1970
		Executive	Sachs	--	--	--	336	Tillotson or Keihin	--	--	--	--	--	1970

TABLE D-3. SUMMARY OF CHARACTERISTICS OF SNOW VEHICLES (INTERNAL COMBUSTION POWERED, SKI STEERED) (continued)

Manufacturer	Make	Model	Engine					Carburetor		Dimensions, in.			Weight, lb	Year
			Make	Model	Type	HP	Displacement, cc	Make	Model/Type	Length	Width	Track Width		
Chaparral Industries Inc.	Chaparral	Executive	Hirth	210R	--	--	399	Tillotson or Keihin	--	--	--	--	--	1970
		Executive	Hirth	211R	--	--	438	Tillotson or Keihin	--	--	--	--	--	1970
		Executive	Hirth	220R	--	--	493	Tillotson or Keihin	--	--	--	--	--	1970
		Executive	Hirth	171R	--	--	634	Tillotson or Keihin	--	--	--	--	--	1970
		Snowgoer	Kohler	K618-2	--	--	618	Tillotson or Keihin	--	--	--	--	--	1970
		Skylark	Hirth	193R	--	--	292	Tillotson	HR	--	--	--	--	1971
		Skylark	Hirth	194A	--	--	338	Tillotson	HD	--	--	--	--	1971
		Skylark	Hirth	200R	--	--	372	Tillotson	HD	--	--	--	--	1971
		Firebird	Hirth	194R	--	--	338	Tillotson	HD	--	--	--	--	1971
		Firebird	JLO	L340/2	--	--	339	--	--	--	--	--	--	1971
		Firebird	CCW	340	--	--	339	Keihin	HR	--	--	--	--	1971
		Firebird	JLO	L399/2	--	--	398	--	--	--	--	--	--	1971
		Firebird	CCW	400	--	--	398	Keihin	HR	--	--	--	--	1971
		Firebird	Hirth	211R	--	--	438	Keihin	HD	--	--	--	--	1971
		Firebird	Sachs	SA2-440	--	--	437	Keihin	HD	--	--	--	--	1971
		Firebird	CCW	440	--	--	--	Keihin	HD	--	--	--	--	1971
		Firebird	Hirth	220R	--	--	493	Keihin	HD	--	--	--	--	1971
		Firebird	Hirth	171R	--	--	634	Keihin	HD	--	--	--	--	1971
		Executive	JLO	L340/2	--	--	339	--	--	--	--	--	--	1971
		Executive	CCW	340	--	--	339	Keihin	HR	--	--	--	--	1971
		Executive	JLO	L399/2	--	--	398	--	--	--	--	--	--	1971
		Executive	CCW	400	--	--	398	Keihin	HR	--	--	--	--	1971
		Executive	Hirth	211R	--	--	438	Keihin	HD	--	--	--	--	1971
		Executive	Sachs	SA2-440	--	--	437	Keihin	HD	--	--	--	--	1971
		Executive	CCW	440	--	--	--	Keihin	HD	--	--	--	--	1971
		Executive	Hirth	220R	--	--	493	Keihin	HD	--	--	--	--	1971
		Executive	Hirth	171R	--	--	634	Keihin	HD	--	--	--	--	1971

TABLE D-3. SUMMARY OF CHARACTERISTICS OF SNOW VEHICLES (INTERNAL COMBUSTION POWERED, SKI STEERED) (continued)

Manufacturer	Make	Model	Engine					Carburetor		Dimensions, in.			Weight, lb	Year
			Make	Model	Type	HP	Displacement, cc	Make	Model/Type	Length	Width	Track Width		
Chaparral Industries Inc.	Chaparral	Skylark	CCW	--	--	--	248	Tillotson	HR	--	--	--	--	1972
		Skylark	Hirth	193R	--	--	292	Tillotson	HR	--	--	--	--	1972
		Firebird	Hirth	260R	--	--	338	Walbro	WR	--	--	--	--	1972
		Firebird	CCW	340	--	--	339	Keihin	406	--	--	--	--	1972
		Firebird	Chaparral	400	--	--	394	Keihin	407	--	--	--	--	1972
		Firebird	CCW	400	--	--	398	Keihin	406	--	--	--	--	1972
		Firebird	Hirth	270R	--	--	438	Walbro	WD	--	--	--	--	1972
		Firebird	Chaparral	440	--	--	432	Keihin	407	--	--	--	--	1972
		Firebird SS	Hirth	261R	--	--	292	Walbro	WR	--	--	--	--	1972
		Firebird SS	Hirth	260R	--	--	338	Walbro	WD	--	--	--	--	1972
		Firebird SS	Hirth	271R	--	--	399	Walbro	WD	--	--	--	--	1972
		Firebird SS	Chaparral	400	--	--	394	Keihin	407	--	--	--	--	1972
		Firebird SS	Sachs	SA2-440	--	--	437	Keihin	407	--	--	--	--	1972
		Firebird SS	Hirth	270R	--	--	438	Walbro	WD	--	--	--	--	1972
		Firebird SS	Chaparral	440	--	--	432	Keihin	407	--	--	--	--	1972
		Firebird SS	Hirth	280R	--	--	649	Walbro	WD	--	--	--	--	1972
		Thunderbird	Hirth	260R	--	--	338	Walbro	WD	--	--	--	--	1972
		Thunderbird	Chaparral	400	--	--	394	Keihin	407	--	--	--	--	1972
		Thunderbird	Chaparral	440	--	--	432	Keihin	407	--	--	--	--	1972
		Thunderbird	Hirth	280R	--	--	649	Walbro	WD	--	--	--	--	1972
Herter's Inc.	Herter's	10hp	JLO	L252	--	10	247	Tillotson	HL186B	--	--	--	--	1968
		17.5hp	JLO	L297	--	17.5	296	Tillotson	HD6B	--	--	--	--	1968
		20hp	JLO	L372	--	20	372	Tillotson	HD6B	--	--	--	--	1968
		Sitka	JLO	L227	--	--	223	Tillotson	HR22A	--	--	--	--	1969
		Yakutat	JLO	L300	--	--	296	Tillotson	HD14A	--	--	--	--	1969
		Seward	JLO	L300	--	--	296	Tillotson	HD14A	--	--	--	--	1969
		Kodiak	JLO	L380	--	--	372	Tillotson	HD14A	--	--	--	--	1969
		Yukon	JLO	L380	--	--	372	Tillotson	HD14A	--	--	--	--	1969
		Barrow	Kohler	399-2	--	--	399	Tillotson	HR21A	--	--	--	--	1969
		Sitka 15	JLO	L295	--	--	292	Tillotson	HD14A	--	--	--	--	1970
		Sitka 18	JLO	L295	--	--	292	Tillotson	HD14A	--	--	--	--	1970
		Yakutat 15	JLO	L340	--	--	336	Tillotson	HD14A	--	--	--	--	1970

TABLE D-3. SUMMARY OF CHARACTERISTICS OF SNOW VEHICLES (INTERNAL COMBUSTION POWERED, SKI STEERED) (continued)

Manufacturer	Make	Model	Engine					Carburetor		Dimensions, in.			Weight, lb	Year
			Make	Model	Type	HP	Displacement, cc	Make	Model/Type	Length	Width	Track Width		
Herter's Inc.	Herter's	Yakutat 18	JLO	L340	--	--	336	Tillotson	HD14A	--	--	--	--	1970
		Seward 15	JLO	L395	--	--	396	Tillotson	HD14A	--	--	--	--	1970
		Seward 18	JLO	L395	--	--	396	Tillotson	HD14A	--	--	--	--	1970
		Kodiak 18	JLO	L440/2	--	--	433.8	Tillotson	HD14A	--	--	--	--	1970
		Yukon 18	JLO	L440/2	--	--	433.8	Tillotson	HD14A	--	--	--	--	1970
		Barrow 18	Kohler	K399-2	--	--	399	Tillotson	HR	--	--	--	--	1970
		Nome 15	Lloyd	LS400	--	--	386	Tillotson	HD14A	--	--	--	--	1970
		Nome 18	Lloyd	LS400	--	--	386	Tillotson	HD14A	--	--	--	--	1970
		Nitro G	JLO	L295	--	--	292	Tillotson	HD13A	--	--	--	--	1970
		Nitro GI	JLO	L340	-	--	336	Tillotson	HD13A	--	--	--	--	1970
		Nitro GII	JLO	LR760/2	--	--	744	Tillotson	HD13A	--	--	--	--	1970
		Sitka	JLO	L295	--	--	292	Tillotson	HR61A	--	--	--	--	1971
		Yakutat	JLO	L340	--	--	338	Tillotson	HD63A	--	--	--	--	1971
		Kodiak	Sachs	L440	--	--	436	Tillotson	HD64A	--	--	--	--	1971
		Yukon	Kohler	K340-2	--	--	339	Tillotson	HR79A	--	--	--	--	1971
		Barrow	Kohler	K399-2	--	--	399	Tillotson	HR79A	--	--	--	--	1971
		Nitro G	Sachs	SA290SS	--	--	293	Tillotson	HO29A	--	--	--	--	1971
		Nitro G	Sachs	SA340	--	--	336	Tillotson	HD27A	--	--	--	--	1971
		Nitro G	Sachs	SA2-440	--	--	436	Tillotson	HD64A	--	--	--	--	1971
		Yukon	Kohler	K399-2	--	--	399	Tillotson	HR79A	--	--	--	--	1972
		Kodiak	Sachs	SA2-440	--	--	436	Tillotson	HD64A	--	--	--	--	1972
		Klondike	Kohler	K440-2	--	--	436	Tillotson	HO	--	--	--	--	1972
		Nitro GI	Kohler	K399-2	--	-	399	Tillotson	HR79A	--	--	--	--	1972
		Nitro GII	Kohler	K440-2	--	--	436	Tillotson	HO	--	--	--	--	1972
		Nitro GIII	Sachs	SA2-440	--	--	436	Tillotson	HD64A	--	--	--	--	1972
Industries Bouchard Inc.	Moto-Ski	100	JLO	L252	--	--	247	Tillotson	HL187A	--	--	--	--	1965
		300	Hirth	53R	--	--	300	Tillotson	HL192A	--	--	--	--	1965
		Cadet	Hirth	81R	--	--	246	Tillotson	HL187	--	--	--	--	1966
		Capri	Hirth	54R	--	--	300	Tillotson	HL207A	--	--	--	--	1966
		Zephyr	Hirth	54R	--	--	300	Tillotson	HL207A	--	--	--	--	1966

TABLE D-3. SUMMARY OF CHARACTERISTICS OF SNOW VEHICLES (INTERNAL COMBUSTION POWERED, SKI STEERED) (continued)

			Engine					Carburetor		Dimensions, in.				
Manufacturer	Make	Model	Make	Model	Type	HP	Displacement, cc	Make	Model/Type	Length	Width	Track Width	Weight, lb	Year
Industries Bouchard Inc.	Moto-Ski	151H	Hirth	55R	--	--	300	Tillotson	HR3A	--	--	--	--	1967
		202H	Hirth	55R	--	--	300	Tillotson	HR3A	--	--	--	--	1967
		Cadet	Hirth	82R	--	--	246	Tillotson	HR13A	--	--	--	--	1968
		Capri	Hirth	55R	--	--	300	Tillotson	HR16AX	--	--	--	--	1968
		Zephyr	Hirth	55R	--	--	300	Tillotson	HR16AX	--	--	--	--	1968
		Zephyr	Hirth	160R	--	--	372	Tillotson	H07AX	--	--	--	--	1968
		MS-18	Hirth	55R	--	--	300	Tillotson	HR16AX	--	--	--	--	1968
		Cadet	Hirth	82R	--	--	246	Tillotson	HR16	--	--	--	--	1969
		Capri	Hirth	192R	--	--	317	Tillotson	HR25A	--	--	--	--	1969
		Capri	Hirth	200R	--	--	372	Tillotson	HD17A	--	--	--	--	1969
		Zephyr	Hirth	192R	--	--	371	Tillotson	HR25A	--	--	--	--	1969
		Zephyr	Hirth	200R	--	--	372	Tillotson	H017A	--	--	--	--	1969
		MS-18	Hirth	200R	--	--	372	Tillotson	HD17A	--	--	--	--	1969
		MS-18	Hirth	220R	--	--	493	Tillotson	HD17A	--	--	--	--	1969
		MS-18	Hirth	171R	--	--	634	Tillotson	HD17A	--	--	--	--	1969
		Cadet	JLO	L295	--	--	292	Tillotson	HR44A	--	--	--	--	1970
		Capri	Hirth	191R	--	--	300	Tillotson	HR44A	--	--	--	--	1970
		Capri	Hirth	194R	--	--	338	Tillotson	HD25A	--	--	--	--	1970
		Capri	JLO	L380	--	--	372	Tillotson	H025A	--	--	--	--	1970
		Zephyr	Hirth	192R	--	--	317	Tillotson	HR44A	--	--	--	--	1970
		Zephyr	Hirth	194R	--	--	338	Tillotson	H017A	--	--	--	--	1970
		Zephyr	Hirth	200R	--	--	372	Tillotson	HD17A	--	--	--	--	1970
		Zephyr	JLO	L380	--	--	372	Tillotson	HD17A	--	--	--	--	1970
		MS-18	JLO	L380	--	--	372	Tillotson	H017A	--	--	--	--	1970
		MS-18	Hirth	220R	--	--	493	Tillotson	H017A	--	--	--	--	1970
		MS-18	Hirth	171R	--	--	634	Tillotson	H017A	--	--	--	--	1970
		Grand Prix	Hirth	194R	--	--	338	Tillotson	H017A	--	--	--	--	1970
		Grand Prix	Sachs	--	--	--	340	Tillotson	HD17A	--	--	--	--	1970
		Grand Prix	Hirth	211R	--	--	438	Tillotson	HD17A	--	--	--	--	1970
		Grand Prix	Hirth	171R	--	--	634	Tillotson	HD17A	--	--	--	--	1970

TABLE D-3. SUMMARY OF CHARACTERISTICS OF SNOW VEHICLES (INTERNAL COMBUSTION POWERED, SKI STEERED) (continued)

Manufacturer	Make	Model	Engine					Carburetor		Dimensions, in.			Weight, lb	Year
			Make	Model	Type	HP	Displacement, cc	Make	Model/Type	Length	Width	Track Width		
Industries Bouchard Inc.	Moto-Ski	Mini Sno	JLO	L223	--	--	223	Keihin	406	--	--	--	--	1971
		Capri	JLO	L295	--	--	292	Keihin	406	--	--	--	--	1971
		Capri	Hirth	194R	--	--	338	Tillotson	HR	--	--	--	--	1971
		Capri	JLO	LR399/2	--	--	398	Tillotson	HR	--	--	--	--	1971
		Zephyr	Hirth	194R	--	--	338	Tillotson	HO	--	--	--	--	1971
		Zephyr	JLO	LR399/2	--	--	398	Tillotson	HO	--	--	--	--	1971
		Grand Prix	JLO	LR340/2	--	--	339	Tillotson	HO	--	--	--	--	1971
		Grand Prix	JLO	LR399/2	--	--	398	Tillotson	HO	--	--	--	--	1971
		Grand Prix	Hirth	171R	--	--	634	Tillotson	HO	--	--	--	--	1971
		MS-18	JLO	LR399/2	--	--	398	Tillotson	HD	--	--	--	--	1971
		MS-18	Hirth	171R	--	--	634	Tillotson	HO	--	--	--	--	1971
		Capri 250	BSE	--	--	--	247	Tillotson	--	--	--	--	--	1972
		Capri 295	Hirth	193R	--	--	292	Tillotson	--	--	--	--	--	1972
		Capri 340	Hirth	194R	--	--	338	Tillotson	--	--	--	--	--	1972
		Capri 340	JLO	LR340/2	--	--	339	Tillotson	--	--	--	--	--	1972
		Capri 400	JLO	LR399/2	--	--	398	Tillotson	--	--	--	--	--	1972
		Zephyr 340	BSE	--	--	--	336	Tillotson	--	--	--	--	--	1972
		Zephyr 440	BSE	--	--	--	435	Tillotson	--	--	--	--	--	1972
		MS-18 400	JLO	LR399/2	--	--	398	Tillotson	--	--	--	--	--	1972
		Grand Prix SS	BSE	--	--	--	336	Tillotson	--	--	--	--	--	1972
		Grand Prix SS	BSE	--	--	--	435	Tillotson	--	--	--	--	--	1972
Rupp Industries Inc.	Nitro	295	Rupp	--	--	--	295	--	--	--	--	15.5	--	--
		340	Rupp	--	--	--	340	--	--	--	--	15.5	--	--
		400	Rupp	--	--	--	400	--	--	--	--	15.5	--	--
		440	Rupp	--	--	--	440	--	--	--	--	15.5		--
		650	Rupp	--	--	--	650	--	--	--	--	18	--	--
Polaris Industries Inc.	Polaris	Lil' Andy	JLO	L152	--	--	148	Tillotson	HL	--	--	--	--	1965
		Mustang KA80H	Kohler	K181	--	--	305 (18.6 ci)	Carter	N	--	--	--	--	1965
		Mustang J90H	JLO	L252	--	--	247	Tillotson	HL187A	--	--	--	--	1965
		Mustang H12H	Hirth	52R	--	--	300	Tillotson	HL184A	--	--	--	--	1965

TABLE D-3. SUMMARY OF CHARACTERISTICS OF SNOW VEHICLES (INTERNAL COMBUSTION POWERED, SKI STEERED) (continued)

			Engine					Carburetor		Dimensions, in.				
Manufacturer	Make	Model	Make	Model	Type	HP	Displacement, cc	Make	Model/Type	Length	Width	Track Width	Weight, lb	Year
Polaris Industries Inc.	Polaris	Colt	JLO	L252	--	--	247	Tillotson	HL211B	--	--	--	--	1966
		Mustang 900	JLO	L252	--	--	247	Tillotson	HL211B	--	--	--	--	1966
		Mustang 1000	JLO	L252	--	--	247	Tillotson	HL211B	--	--	--	--	1966
		Mustang 1400	JLO	L372	--	--	372	Tillotson	HD6A	--	--	--	--	1966
Rupp Industries Inc.	Rogue	25hp	Rupp	--	--	25	--	--	--	--	--	15.5	--	--
		15hp	Rupp	--	--	15	--	--	--	--	--	15.5	--	--
Sports Power Inc.	Sno-Pony	Colt	Chrysler	8200	--	--	134	Tillotson	HL135	--	--	--	--	1969
		Pony	Chrysler	8200	--	--	134	Tillotson	HL135	--	--	--	--	1969
		Express	Chrysler	8200	--	--	134	Tillotson	HL135	--	--	--	--	1969
		Spr. Ex.	JLO	L227	--	--	223	Tillotson	HR19A	--	--	--	--	1969
		Mach I	Chrysler	8200	--	--	134	Tillotson	HR135	--	--	--	--	1970
		Mach II	Solo	206	--	--	180	Tillotson	HR19A	--	--	--	--	1970
		Mach III	Solo	209	--	--	220	Tillotson	HR19A	--	--	--	--	1970
		Spr. Ex.	JLO	L230	--	--	223	Tillotson	HR19A	--	--	--	--	1970
		Spr. Ex.	McCullough	101	--	--	296	McCullough	--	--	--	--	--	1970
		180	Solo	206	--	--	180	Tillotson	HR19A	--	--	--	--	1971
		220	Solo	209	--	--	220	Tillotson	HR19A	--	--	--	--	1971
		295R	JLO	R295	--	--	292	Tillotson	HD13A	--	--	--	--	1971
		340 Twin	JLO	LR340/2	--	--	339	Tillotson	HD69A	--	--	--	--	1971
		Convertible	Solo	209	--	--	220	Tillotson	HR19A	--	--	--	--	1971
		180	Solo	206	--	--	180	--	--	--	--	--	--	1972
		220	Solo	209	--	--	220	--	--	--	--	--	--	1972
		340 Twin	JLO	LR340/2	--	--	339	--	--	--	--	--	--	1972
		295R	JLO	--	--	--	--	--	--	--	--	--	--	1972
Lionel Enterprises Inc.	Sno-Prince	A-16	Hirth	54R	--	--	300	Tillotson	HR3A	--	--	--	--	1968
		A-17	Hirth	190R	--	--	300	Tillotson	HR8A	--	--	--	--	1968
		E-17	Hirth	160R	--	--	372	Tillotson	HD7A	--	--	--	--	1968
		A-18	Hirth	191R	--	--	300	Tillotson	HR	--	--	--	--	1969

TABLE D-3. SUMMARY OF CHARACTERISTICS OF SNOW VEHICLES (INTERNAL COMBUSTION POWERED, SKI STEERED) (continued)

			Engine					Carburetor		Dimensions, in.				
Manufacturer	Make	Model	Make	Model	Type	HP	Displacement, cc	Make	Model/Type	Length	Width	Track Width	Weight, lb	Year
Lionel Enterprises Inc.	Sno-Prince	A-28	Lloyd	LS400	--	--	386	Tillotson	HR26A	--	--	--	--	1969
		K-28	Hirth	171R	--	--	634	Tillotson	HD13A	--	--	--	--	1969
		Blizzard	Sachs	SA280A	--	--	277	Tillotson	HL252A	--	--	--	--	1970
		Tornado I	Lloyd	LS400	--	--	386	Tillotson	HR26A	--	--	--	--	1970
		Tornado II	Hirth	191R	--	--	300	Tillotson	HR8A	--	--	--	--	1970
		Cyclone I	Lloyd	LS400	--	--	386	Tillotson	HR47A	--	--	--	--	1970
		Cyclone II	Sachs	SA370	--	--	368	Tillotson	HD26A	--	--	--	--	1970
		Cyclone III	Hirth	200R	--	--	372	Tillotson	HD26A	--	--	--	--	1970
		Hurricane I	Hirth	200 R	--	--	372	Tillotson	HD26A	--	--	--	--	1970
		Hurricane II	Hirth	220R	--	--	493	Keihin	407	--	--	--	--	1970
		XL-300-S	Sachs	SA280	--	--	277	Tillotson	HL252A	--	--	--	--	1971
		XL-300-J	JLO	L295	--	--	292	Tillotson	HR102A	--	--	--	--	1971
		XL-340	Hirth	194R	--	--	338	Tillotson	HD65A	--	--	--	--	1971
		XLS-340/2	Lloyd	LS400	--	--	386	Tillotson	HR47A	--	--	--	--	1971
		XL-400	JLO	LR399/2	--	--	398	Tillotson	HD65A	--	--	--	--	1971
		GTS-340	Hirth	200R2	--	--	372	Tillotson	HD26A	--	--	--	--	1971
		GT-400	JLO	LR399/2	--	--	398	Tillotson	HD25A	--	--	--	--	1971
		GT-500	Hirth	220R4	--	--	493	Tillotson	HD25A	--	--	--	--	1971
		GT-640	Hirth	171R	--	--	634	Tillotson	HD25A	--	--	--	--	1971
Speedway Products Inc.	Speedway	340	Sachs	--	2 cylinder	34	340	Walbro	HD	94	33	15.5	330	--
		440	Kohler	--	2 cylinder	58	440	Tillotson	HD	94	33	15.5	346	--
		650	Kohler	--	3 cylinder	90	650	Tillotson	HD	94	33	15.5	370	--
Rupp Industries Inc.	Yankee	25hp	Rupp	--	2 cylinder	25	--	--	--	--	--	15.5	--	--
		30hp	Rupp	--	2 cylinder	30	--	--	--	--	--	15.5	--	--
		40hp	Rupp	--	2 cylinder	40	--	--	--	--	--	15.5	--	--

TABLE D-4. SUMMARY OF CHARACTERISTICS OF LAND VEHICLES (INTERNAL COMBUSTION POWERED)[a]

Model	Manufacturer	Engine				Transmission	Suspension	Overall Dimensions, in.			Weight, lb	Additional Information
		Make	Type, cycle	HP	Displacement, cc			Length	Width	Height		
Aztec	Azimuth Eng. Co.	Kohler	4	18	--	Hydrostatic	--	100	50	54	2000	Loader-tractor
Chevy Jr.	Rupp Industries Inc.	Tecumseh	4	3.5	--	Forward	--	87	35.5	--	240	--
Concept 4X4 (Little David)	U. S. Army	--	--	6-10	--	--	--	66	48	26	500	Remote radio control
D-301	Rupp Industries Inc.	Tecumseh	4	3.5	--	Forward	--	57	36	--	115	--
Dunecycle	A.P.E. Products	Briggs & Stratton	4	5	200	Forward	Soft tires	68	46	31	110	$460
Haflinger	Steyr-Puch	--	--	25	639 (39 ci)	--	All-coil	--	--	--	--	$2000
Jeep M151A1	Ryan Aeronautical Co.	--	--	--	--	--	--	--	--	--	--	Remote radio control
Mighty Mo X-150	Remote-A-Matic	Briggs & Stratton	4	8	319 (19.44 ci)	Forward, reverse	--	65	44	30	325	Remote or manual control
Mini-Dozer	C. F. Struck Corp.	--	4	6	--	Forward, reverse	Rigid	46	37.5	33	--	$400
Pug	Bruce Mfg. Corp.	Tecumseh	--	12	--	Torque converter, 2 forward, 1 reverse	None	138	51	--	1000	$1795
Sierra Sadie	Sierra Motors	--	--	9.5	--	--	--	96	48	--	1000	$700
Trail-Breaker MK III	Rokon Inc.	Chrysler	2	8	134 (8.2 ci)	Albion 3 SP	5-psi tires	77	28	41	180	$695

(a) Abbreviation used:

ci = cubic inch.

TABLE D-5. SUMMARY OF CHARACTERISTICS OF LAND VEHICLES (ELECTRIC POWERED)

Model	Manufacturer	Motor Make	Motor Type	Motor HP	Power Source Type	Power Source Capacity	Overall Dimensions, in. Length	Overall Dimensions, in. Width	Overall Dimensions, in. Height	Weight, lb	Additional Information
--	Chubu Electric Co.	--	80 v (6 kw)	--	Ni-Cd/96 v	11.5 kwhr	--	--	--	3850	--
--	Kansai Elec. Pwr. Co.	--	80 v (5 kw)	--	Pb-acid/84 v	8.8 kwhr	--	--	--	2178	--
--	Lansing-Bagnall Ltd.	--	--	--	Pb-acid	4.7 kwhr	--	--	--	--	--
--	Rowan Controller Co.	--	Compound d.c.	--	Pb-acid/48 v	7.2 kwhr	--	--	--	--	--
--	Tokyo Electric Pwr. Co.	--	90 v (5.5 kw)	--	Pb-acid/96 v	6.7 kwhr	--	--	--	1750	--
--	Tube Investments Ltd.	--	--	--	Pb-acid	--	--	--	--	950	--
--	Yardney	--	Series d.c.	7.1	Ag-Zn	12 kwhr	--	--	--	1600	--
--	Yuasa Denchi Co. Ltd.	--	63 v (7.31 kw)	--	Pb-acid/80 v	32 kwhr	--	--	--	4290	--
Allectric	West Penn Pwr. Co.	--	72 v	7.1	Pb-acid/72 v	9 kwhr	--	--	--	2160	--
Carter Coaster	Carter Eng.	--	Shunt d.c.	--	Pb-acid/12 v	5 kwhr	--	--	--	700	--
Concept 4X4 (Little David)	U.S. Army	--	--	2-3	TN	--	66	52	26	700	Remote radio control
Concept 6X6 (Little David)	U.S. Army	--	--	2-3	TN	--	86	52	26	800	Remote radio control
Electrovair	General Motors Corp.	--	Induction a.c.	100	Ag-Zn/530 v	19.5 kwhr	--	--	--	3400	--
Electrovan	General Motors Corp.	--	Induction a.c.	125	H_2-O_2	180-270 kwhr	--	--	--	7100	--
Fiat 103TE	Fiat	--	96 v compound	--	Pb-acid/12 v (16)	10 kwhr	--	--	--	2992	--
Fiat Mark II	Fiat	--	96 v compound	--	Pb-acid/12 v (16)	10 kwhr	--	--	--	2992	--
Ford Commuta	Ford of U.K.	--	--	5 (2)	Pb-acid/48 v	5 kwhr	--	--	--	1200	--
Henney Kilowatt	Union Electric Corp.	--	Series d.c.	7.1	Pb-acid	8 kwhr	--	--	--	2135	--
Markette	Westinghouse	--	--	4.5 (2)	Pb-acid	8 kwhr	--	--	--	1730	--
Mars II	Elect. Fuel Propul. Inc.	--	--	15	Pb-acid/96 v	30 kwhr	--	--	--	3640	Renault 10 base
Mini	General Electric Co.	--	--	--	Pb-acid & Ni-Cd	--	--	--	--	2300	--
Mini II	Telearchics Ltd.	--	Series d.c.	3 (2)	Pb-acid/64 v	[illegible] kwhr	--	--	--	2378	--
Mini I Traveler	AEI Ltd.	--	Series d.c.	10	Pb-acid/96 v	6.3 kwhr	--	--	--	2499	
Pargo	Columbia Car Corp.	--	d.c.	--	Pb-acid/48 v	--	--	--	--	--	
Pargo	Columbia Car Corp.	--	d.c.	--	Pb-acid/36 v	--	--	--	--	--	
ROAM	Space-General	Black & Decker	Reversible d.c.	1/3 (2)	Motorcycle battery/12 v (4)	4 hr	42	32	--	100	Remote radio control walker
Rover	Bendix Corp.	--	--	--	--	--	50	29	27	200	Remote control retriever

TABLE D-5. SUMMARY OF CHARACTERISTICS OF LAND VEHICLES (ELECTRIC POWERED) (continued)

Model	Manufacturer	Motor			Power Source		Overall Dimensions, in.			Weight, lb	Additional Information
		Make	Type	HP	Type	Capacity	Length	Width	Height		
Scamp	Scottish Aviation Ltd.	--	Series d.c.	2.7 (2)	Pb-acid/48 v	5 kwhr	--	--	--	1000	--
Sedan	Linear Alpha	--	Inductive a.c.	25	Li-Ni-F/144 v	20 kwhr	--	--	--	--	Modified Ford Falcon
Starr Car	Alden Self-Transit Corp.	--	--	2.5 (4)	Pb-acid/18 v	--	--	--	--	1700	--
Super Electric Model A	Gar Wood	--	--	2 (2)	Pb-acid/96 v	--	--	--	--	--	--
Trident	Peel Eng.	--	--	5	Pb-acid/12 v	--	--	--	--	500	--
Urbanina	Bargagli & Christiani	--	24 v	1.3	Pb-acid	1.9 kwhr	--	--	--	750	--
Utility Van	Linear Alpha	--	Inductive a.c.	40	Li-Ni-F/144 v	25 kwhr	--	--	--	--	Modified Internat'l Harvester M-800
Voltair	Elect. Fuel Propul. Inc.	--	Series d.c.	--	Pb-Co	--	--	--	--	5300	Hornet base
West Special	--	--	--	--	Ni-Cd/12 v	--	--	--	--	650	--
Wheel Horse EXT	Aircraft Dynamics	--	Traction	1 (2)	Pb-acid/6 v (6)	--	--	--	--	--	Charger 10 base: tractor
Winn	High Speed Motors Inc.	--	Series d.c.	4	Pb-acid/48 v	6 kwhr	--	--	--	1200	--

TABLE D-6. SUMMARY OF CHARACTERISTICS OF WATER VEHICLES (INTERNAL COMBUSTION POWERED)

Model	Manufacturer	Engine Make	Engine Type	Engine HP	Speed, knots	Range, nautical miles	Control	Overall Dimensions, in. Length	Width/Beam	Draft	Height	Weight	Additional Information
--	Charles Mooney	Onison & Rice	Industrial	3/4	25	Line of sight	Remote radio	60	14	3	--	50 lb	PT boat model
Corsair II	(Italian)	--	Diesel	--	10	800	Manned	472	54	--	--	14 tons	Swimmer delivery vehicle
CT2F	(Italian)	--	Gasoline	--	3.5	20	Manned	228	30.5	--	--	1.7 tons	Swimmer delivery vehicle
Firefish	SANDAIRE	Mercruiser	4 cylinder, 4 stroke	120	30	--	Remote radio	204	80	--	39	1650 lb	Target and utility
Marlin	Aristo-Craft	Seahorse 15	Outboard	--	--	--	Remote radio	29.8	11.5	--	6.8	--	Model
SX	(Italian)	--	Diesel	300	11	1200	Manned	636	84	--	--	52 tons	Swimmer delivery vehicle
SX 324	(Italian)	--	Diesel	--	11	1000	Manned	612	78	--	--	32 tons	Swimmer delivery vehicle
SX 404	(Italian)	--	Diesel	235	11	1200	Manned	628	78	--	--	40 tons	Swimmer delivery vehicle
Tarpon	Aristo-Craft	Seahorse 15	Outboard	--	-	--	Remote radio	37.8	14.5	--	7.8	--	Model
Water Spyder 1-A	Water Spyder Marine Ltd.	Various	Outboard	10-25	40 mph	--	Manned	72	48-84	--	--	80 lb	Hydrofoil
Water Spyder 2-B	Water Spyder Marine Ltd.	Various	Outboard	20-35	40 mph	--	Manned	144	64-86	--	--	220 lb	Hydrofoil
Water Spyder 6-A	Water Spyder Marine Ltd.	Various	Outboard	60-115	40 mph	--	Manned	228	99-156	--	54	980 lb	--

TABLE D-7. SUMMARY OF CHARACTERISTICS OF WATER VEHICLES (ELECTRIC POWERED)

Model	Manufacturer	Motor		Power Source		Speed, knots	Range, nautical miles	Control	Overall Dimensions, in.				Weight	Additional Information
		Make	Type	Type	Capacity				Length	Width/ Beam	Draft	Height		
--	Komatsu Ltd.	--	168 hp	Diesel gen.	170 kva	2.2 mph	492 ft	Remote cable	330.7	147.6	--	147.6	37.5 tons	Underwater bulldozer
Aberdeen	Land Warfare Lab	Chrysler	12 v, d.c. (2)	Pb-acid (2 or 3)	8 amphr (ea)	8.5	Line of sight	Remote radio	69	11	6	--	27 lb	Flat top boat
Aquaped	Aerojet	--	d.c.	Pb-acid	--	1.5-2	25	Manned	--	--	--	--	19 lb	Swimmer delivery vehicle
Canoe	(British)	--	d.c.	Pb-acid	--	4.4	40	Manned	152	27	--	--	600 lb	Swimmer delivery vehicle
CE2F	(Italian)	--	d.c.	Ag-Zn or Pb-acid	--	4.5	100/60	Manned	236.2	31.5	--	--	1.9 tons	Swimmer delivery vehicle
CE2F/C	(Italian)	--	d.c.	Pb-acid	--	6	60	Manned	292	34	--	--	2.6 tons	Swimmer delivery vehicle
Chariot	(British)	--	2 hp, d.c.	Pb-acid	--	3	15	Manned	265	28.5	--	--	1.75 tons	Swimmer delivery vehicle
Corsair II	(Italian)	--	--	--	--	0.6	80	Manned	472	54	--	--	14 tons	Swimmer delivery vehicle
CT2F	(Italian)	--	d.c.	Pb-acid	--	3.5	20	Manned	228	30.5	--	--	1.7 tons	Swimmer delivery vehicle
Minisub MK III	Aerojet	--	--	Pb-acid	--	5	31	Manned	102	44	--	51	196 lb	Swimmer delivery vehicle
Minisub MK VI	Aerojet	--	--	Pb-acid	--	4-5	7-10	Manned	172	22	--	48	600 lb	Swimmer delivery vehicle
Minisub MK VIII	Aerojet	--	d.c.	--	--	3-4	7-8	Manned	168	90	--	46	979 lb	Swimmer delivery vehicle

TABLE D-7. SUMMARY OF CHARACTERISTICS OF WATER VEHICLES (ELECTRIC POWERED) (continued)

Model	Manufacturer	Motor		Power Source		Speed, knots	Range, nautical miles	Control	Overall Dimensions, in.				Weight	Additional Information
		Make	Type	Type	Capacity				Length	Width/ Beam	Draft	Height		
Pig	(Italian)	--	d.c.	Pb-acid	--	2.2	10	Manned	204	20.8	--	--	1.54 tons	Swimmer delivery vehicle
Sea Orone I	Oceanic Industries	--	1/2 hp, d.c. (2)	Pb-acid/ 48 v	220 amphr	6	5.2	Remote acoustic	204	24	--	26	1.4 tons	Submersible
Sea Horse Mod I	(Italian)	--	1.8 hp, d.c.	Ag-Zn	--	3.8	25	Manned	174	30	--	--	850 lb	Swimmer delivery vehicle
Sea Horse II	(Italian)	--	1.8 hp, d.c.	Pb-acid	--	3.5	15	Manned	173	29	--	--	800 lb	Swimmer delivery vehicle
Snoopy	NUC	--	--	Hydraulic	--	--	--	Remote cable	48	--	--	15	60 lb	Underwater TV system
SSB	(Italian)	--	d.c.	Pb-acid	--	6	45	Manned	337	32	--	--	2 tons	Swimmer delivery vehicle
SX	(Italian)	--	54 hp	--	--	11	1200	Manned	636	84	--	--	52 tons	Swimmer delivery vehicle
SX 324	(Italian)	--	--	--	--	11	1000	Manned	612	78	--	--	32 tons	Swimmer delivery vehicle
SX 404	(Italian)	--	40 hp	--	--	11	1200	Manned	628	78	--	--	40 tons	Swimmer delivery vehicle
Trass III	(Italian)	--	d.c.	Pb-acid	--	3	50	Manned	210	29	--	--	1800 lb	Swimmer delivery vehicle
Unitow	Marine Resources Inc.	--	--	--	--	--	0.9	Acoustic homing	144	18	--	--	--	Underwater vehicle
Xcraft	(British)	--	30 hp, d.c.	Pb-acid	--	6	20	Manned	616	69.5	--	--	27 tons	Swimmer delivery vehicle
XE	(British)	--	d.c.	Pb-acid	--	6	80	Manned	637.5	69.5	--	--	30.3 tons	Swimmer delivery vehicle

TABLE D-8. SUMMARY OF CHARACTERISTICS OF WATER VEHICLES (MISCELLANEOUS)

Model	Manufacturer	Propulsion/Power	Speed, knots	Range, nautical miles	Control	Overall Dimensions, in. Length	Width/ Beam	Draft	Height	Weight, lb	Additional Information
--	Robert R. Adams	Sail	8	Line of sight	Remote radio	66	11.8	--	84	--	Model sloop
Flying Fish	Nigg	Sail	30	--	Manned	192	240	12-39	288	--	Hydrofoil
Ice Skimmer	Lockley Mfg. Co.	Sail	--	--	Manned	106	72	--	20+	50+	Ice boat
Minisub MK II	Aerojet	Pedal & CO_2 motor	3-4	4	Manned	--	--	--	--	--	Swimmer delivery vehicle
Minisub MK III	Aerojet	Pedal & CO_2 motor	5	31	Manned	102	44	--	53	196	Swimmer delivery vehicle
Minisub MK VIII	Aerojet	Pedal & electric motor	3-4	7-8	Manned	168	90	--	46	979	Swimmer delivery vehicle
MK I SPU	Aerojet	Pedal	3	3	Manned	--	--	--	--	--	Swimmer delivery vehicle
SKAMP QMB-1	RCA Space Systems	Sail	--	Unlimited	Programmed and remote radio	--	108 D	--	199	1800	Station-keeping platform

TABLE D-9 SUMMARY OF CHARACTERISTICS OF AIR-CUSHION VEHICLES (INTERNAL COMBUSTION POWERED)

Model	Manufacturer	Lift Engine			Propulsion Engine			Speed, mph	Range, nautical miles	Overall Dimensions, in.			Weight, lb	Additional Information
		Make	HP	Displacement, cc	Make	HP	Displacement, cc			Length	Width/Beam	Height		
--	Acrydyne	--	--	--	Avco Lycoming	150(2)	--	50 knots	300	258	132	68-86	4500	Integrated lift & propulsion system
--	Gerald Crisman	--	8	--	--	--	--	--	--	--	48 D	--	--	Integrated lift & propulsion system
--	(German)	Fichtel & Sachs	20	--	Fichtel & Sachs	12	--	30	--	--	--	--	--	Wankel engine
--	Winfield Hovercraft Ltd.	--	--	--	--	--	150	40	--	--	72 D	--	--	Integrated lift & propulsion system
Aeromobile 14	Bertelsen Mfg. Co.	--	--	--	JLO	55	740	50	--	156	--	--	1100	Integrated lift & propulsion system
Agriplane A38	--	--	--	--	--	200	--	--	--	--	--	--	--	Combined SEV & wheeled vehicle
Agriplane A38	--	Renault	150	--	Renault	45	--	--	--	--	--	--	--	Combined SEV & wheeled vehicle
Cyclone	Nigel Beale	Rowena Stihl	13	137	Rowena Stihl	13	137	40	--	112	79	36	200	--
Fan-Jet Skimmer	Skimmers Inc.	--	--	--	Chrysler	6	--	18	30	116	74	36	250	Integrated lift & propulsion system
Floral 1	Nihon University	Fuji ES-162-DS	8	--	Yamamoto or Mercury	22(2) or 50(2)	--	50.5	--	179	70.8	56.8	723	Propulsion by twin outboard engines
Hovercar	Cecil Blankley	--	--	--	Hillman Imp	41.7	840	--	--	174	84	51	1344	Integrated lift & propulsion system
Hoverlark	--	Stihl	--	137	Stihl	--	137	40	--	106	50	47	150	--
Hovernaut	--	Stihl	--	137	Stihl	--	137	30	--	109	73	51.8	181	--
Hoverpallet 206	E. Allman & Co. Ltd.	Various 4 cycle	--	206	--	--	--	--	--	96	48	--	140	Manual propulsion
Hoverpallet 319	E. Allman & Co. Ltd.	Various 4 cycle	--	319	--	--	--	--	--	96	48	--	150	Manual propulsion
Hummingbird	Air Kinetics Inc.	--	--	--	JLO	28	--	35	--	--	--	--	--	Air boat, not ACV
Leda 1	Bettocchi	A.H. 81	6	--	A.H. 81	6	--	35	--	--	72	48	200	--

TABLE D-9. SUMMARY OF CHARACTERISTICS OF AIR-CUSHION VEHICLES (INTERNAL COMBUSTION POWERED) (continued)

Model	Manufacturer	Lift Engine			Propulsion Engine			Speed, mph	Range, nautical miles	Overall Dimensions, in.			Weight, lb	Additional Information
		Make	HP	Displacement, cc	Make	HP	Displacement, cc			Length	Width/Beam	Height		
M-8 Flying Saucer	Bartlett Flying Saucer	--	--	--	Briggs & Stratton	3.5	--	--	--	--	113 0	--	150	Integrated lift & propulsion system
Pinkushion	Mike Pinder	Rowena Stihl	13	137	Aerial Arrow	20	250	30	--	120	84	30	220	--
Portaire	Taylorcraft Pty Ltd.	Wisconsin HS-80	--	--	--	--	--	--	--	60	42	30	135	Manual propulsion
Skim-Air	Morgan Hughes Inc.	--	--	--	2 cycle	28	--	--	--	--	--	--	--	Integrated lift & propulsion system
Smuggler	Air Kinetics Inc.	--	--	--	VW	42	1500	35	--	160	--	--	--	Integrated lift & propulsion system
Spectra 1	(Canadian)	--	--	--	--	--	--	60	--	--	--	--	--	Separate lift & propulsion engines

TABLE D-10. SUMMARY OF CHARACTERISTICS OF POWER SOURCES (ENGINES)

Manufacturer	Model	Displacement, cc	HP @ RPM	Cylinders	Bore/Stroke, mm	Carburetor Model	Carburetor Quantity	Ignition Type	Cooling Type	Weight, lb	Fuel/Oil Ratio
Fichtel & Sachs AG	SA280	277	16 @ 5500	1	71/70	HR	1	Bosch magneto	Centrifugal fan	--	25:1
	SA280A	277	14 @ 4800	1	71/70	HL	1	Bosch magneto	Centrifugal fan	--	25:1
	SA290	297	20 @ 5500	1	73.5/70	HR	1	Bosch magneto	Centrifugal fan	--	25:1
	SA290	293	19.5 @ 5500	1	73/70	HR	1	Bosch magneto	Centrifugal fan	--	25:1
	SA290R	293	--	1	73/70	HO	1	Bosch magneto	Free air	--	25:1
	SA290SS	293	25 @ 6000	1	73/70	HO	1	Bosch magneto	Centrifugal fan	--	25:1
	SA340	336	22 @ 5200	1	75.5/75	HO	1	Bosch magneto	Centrifugal fan	--	25:1
	SA340C	334	29 @ 6500	1	78/70	HO	1	Bosch magneto	Centrifugal fan	--	25:1
	SA340R	334	--	1	78/70	HD	1	Bosch magneto	Free air	--	25:1
	SA340SS	336	26 @ 6000	1	75.5/75	HD	1	Bosch magneto	Centrifugal fan	--	25:1
	SA370	368	24 @ 5300	1	79/75	HR-HD	1	Bosch magneto	Centrifugal fan	--	25:1
Hirth Motoren KG	52R	300	12.5 @ 5000	1	75/68	HL	1	Bosch magneto	Centrifugal fan	--	25:1
	53R	300	13 @ 5000	1	75/68	HL	1	Bosch magneto	Centrifugal fan	--	25:1
	54R	300	15 @ 5000	1	75/68	HR	1	Bosch magneto	Centrifugal fan	--	25:1
	55R	300	15 @ 5000	1	75/68	HR	1	Bosch magneto	Centrifugal fan	--	25:1
	56R	292	15 @ 5000	1	74/68	--	1	Bosch magneto	Centrifugal fan	--	25:1
	56R3	292	15 @ 5000	1 vertical	74/68	--	--	Bosch dynamo magneto	--	47	--
	81R	246	10 @ 5000	1	70/64	HL	1	Bosch magneto	Centrifugal fan	--	25:1
	82R	246	12.5 @ 5000	1	70/64	HR	1	Bosch dynamo magneto	Centrifugal fan	39	25:1
	82R4	246	12.5 @ 5000	1 vertical	70/64	--	--	Bosch magneto	--	39	--
	160R	372	20 @ 5000	1	80.5/73	HO	1	Bosch magneto	Centrifugal fan	--	25:1
	170R	600	30 @ 5000	2	75/68	HR	2	Bosch E.T. magneto	Centrifugal fan	--	25:1
	171R	634	36 @ 5500	2 in-line	77/68	HD	1	Bosch E.T. magneto	Centrifugal fan	77	25:1
	171R4	634	36 @ 5500	2 in-line	77/68	--	--	Bosch dynamo magneto	--	77	--
	171R4E	634	36 @ 5500	2 in-line	77/68	--	--	Bosch dynamo magneto	--	77	--
	172R	650	59 @ 6500	2	78/68	--	--	Bosch E.T. magneto	Centrifugal fan	--	25:1

TABLE D-10. SUMMARY OF CHARACTERISTICS OF POWER SOURCES (ENGINES) (continued)

Manufacturer	Model	Dis-place-ment, cc	HP @ RPM	Cylinders	Bore/Stroke, mm	Carburetor Model	Carburetor Quantity	Ignition Type	Cooling Type	Weight, lb	Fuel/Oil Ratio
Hirth Motoren KG	180R	493	24 @ 5000	2 opposed	70/64	HR	2	Bosch E.T. magneto	Centrifugal fan	--	25:1
	190R	300	19 @ 5000	1	75/68	HR	1	Bosch magneto	Centrifugal fan	--	25:1
	191R	300	19 @ 5500	1	75/68	HR	1	Bosch magneto	Centrifugal fan	--	25:1
	192R	317	20.5 @ 5750	1	77/68	HR	1	Bosch magneto	Centrifugal fan	50	25:1
	192R4	317	20.5 @ 5750	1 vertical	77/68	--	--	Bosch dynamo magneto	--	50	--
	192P4E	317	20.5 @ 5750	1 vertical	77/68	--	--	Bosch dynamo magneto	--	50	--
	193R	292	19 @ 5500	1	74/68	HO	1	Bosch magneto	Centrifugal fan	57	25:1
	193R4	292	19 @ 5500	1 vertical	74/68	--	--	Bosch dynamo magneto	--	57	--
	193R4E	292	19 @ 5500	1 vertical	74/68	--	--	Bosch dynamo magneto	--	57	--
	194R	338	28 @ 6500	1	79.5/68	HO	1	Bosch magneto	Centrifugal fan	51	25:1
	194R4	338	28 @ 6500	1 vertical	79.5/68	--	--	Bosch dynamo magneto	--	51	--
	200R	372	23 @ 5500	1	80.5/73	HO	1	Bosch magneto	Centrifugal fan	63	25:1
	200R4	372	23 @ 5500	1 vertical	80.5/73	--	--	Bosch dynamo magneto	--	63	--
	200R4E	372	23 @ 5500	1 vertical	80.5/73	--	--	Bosch dynamo magneto	--	63	--
	210R	399	22 @ 5500	2 in-line	63/64	HO	1	Bosch E.T. magneto	Centrifugal fan	71	--
	210R4	399	22 @ 5500	2 in-line	63/64	--	--	Bosch dynamo magneto	--	71	25:1
	210R4E	399	22 @ 5500	2 in-line	63/64	-	--	Bosch dynamo magneto	--	71	--
	211R	438	24 @ 5500	2 in-line	66/64	[illegible]	1	Bosch E.T. magneto	Centrifugal fan	70	--
	211R4	438	24 @ 5500	2 in-line	66/64	--	--	Bosch dynamo magneto	--	70	25:1
	211R4E	438	24 @ 5500	2 in-line	66/64	--	--	Bosch dynamo magneto	-	70	--
	220R	493	27 @ 5500	2 in-line	70/64	HO	1	Bosch E.T. magneto	Centrifugal fan	69	--
	220R4	493	27 @ 5500	2 in-line	70/64	--	--	Bosch dynamo magneto	--	69	25:1
	220R4E	493	27 @ 5500	2 in-line	70/64	--	--	Bosch dynamo magneto	--	69	--
	230R	793	80 @ 6500	3 in-line	72.5/64	HO	3	Bosch dynamo magneto	Free air	105	--
	231R	647	65 @ 6500	3	65.5/64	HO	3	Bosch E.T. magneto	Free air	--	25:1
	260R	338	28 @ 6500	2	62/56	--	1	Bosch E.T. magneto	Axial fan	--	25:1
	261R	291	25 @ 6500	2	57.5/56	--	1	--	Axial fan	--	25:1
	Honker	793	80	3	--	--	3	--	Free air	105	25:1

TABLE 0-10. SUMMARY OF CHARACTERISTICS OF POWER SOURCES (ENGINES) (continued)

Manufacturer	Model	Displacement, cc	HP @ RPM	Cylinders	Bore/Stroke, mm	Carburetor Model	Carburetor Quantity	Ignition Type	Cooling Type	Weight, lb	Fuel/Oil Ratio
Kawasaki Motors Corp.	KT-150A	292	20 @ 5500	1	74/68	HR	1	Flywheel magneto	Centrifugal fan	--	20:1
	KT-150B	292	22 @ 6000	1	74/68	HR	1	Flywheel magneto	Centrifugal fan	--	20:1
	KT-150C	333	24 @ 6000	1	79/68	HO	1	Flywheel magneto	Centrifugal fan	--	20:1
McCulloch	4318A	1639	72 @ 4100	4 horizontal, opposed	80.8/79.4	--	--	McCulloch magneto	Air cooled	77	--
	4318E	1639	72 @ 4100	4 horizontal, opposed	80.8/79.4	--	--	McCulloch magneto	Air cooled	--	--
	4318F	1639	92 @ 4100	4 horizontal, opposed	80.8/79.4	--	--	McCulloch magneto	Air cooled	--	--
	4318G	1639	90	--	--	--	--	--	--	--	--
	MC-49C	80.3	5	1	54/35	--	--	High tension magneto	Air cooled	12	20:1
	MC-91B	--	10	1	55/41.5	--	--	High tension magneto	Air cooled	11.8	20:1
Rockwell-JLO	L99	100	4.75 @ 5500	1	55/42	HL	1	E120	Centrifugal fan	--	20:1
	L152	148	5.7 @ 4500	1	59/54	HL	1	RB1 6V/17W	Centrifugal fan	--	25:1
	L197	198	7.3 @ 4500	1	66/58	HL	1	RB1 6V/17W	Centrifugal fan	--	25:1
	L230	223	12.5 @ 5500	1	70/58	HR	1	RB1 6V/17W	Centrifugal fan	--	20:1
	L230	223	14 @ 6000	1	70/58	HO	1	RCP 1V 12V/40W	Centrifugal fan	--	20:1
	L252	247	9.1 @ 4250	1	69/66	HL,HR	1	SB1 6V/16(36)W	Centrifugal fan	--	25:1
	L292	292	14.6 @ 4500	1	75/66	HR,HO	1	SB1 6V/16W	Centrifugal fan	--	20:1
	L295	292	18.5 @ 5500	1	74.5/67	HR,HO	1	SCP 1V 12V/75W	Centrifugal fan	--	20:1
	L297	296	17.5 @ 5000	1	75/67	HR,HO	1	SC 1V 12V/40W	Centrifugal fan	--	20:1
	L300	296	19.5 @ 5500	1	75/67	HR,HO	1	SC1 12V/40W	Centrifugal fan	--	20:1
	L340	336	22 @ 5500	1	80/67	HO	1	RCP 1V 12V/75W	Centrifugal fan	--	20:1
	L372	372	21 @ 5000	1	80/74	HO	1	SC1 12V/40W	Centrifugal fan	--	20:1
	L380	372	23.5 @ 5000	1	80/74	HR,HO	1	SC 1V or CP 1V	Centrifugal fan	--	20:1
	L395	372	24.5 @ 5000	1	82.5/74	HO	1	RCP 1V 12V/75W	Centrifugal fan	--	20:1

TABLE D-10. SUMMARY OF CHARACTERISTICS OF POWER SOURCES (ENGINES) (continued)

Manufacturer	Model	Displacement, cc	HP @ RPM	Cylinders	Bore/Stroke, mm	Carburetor Model	Carburetor Quantity	Ignition Type	Cooling Type	Weight, lb	Fuel/Oil Ratio
Rotax Werke AG	165	163	7	1	62/54	HL	1	Bosch magneto	--	--	20:1
	247	247	12	1	69/66	HL	1	Bosch magneto	--	--	20:1
	250	247	12	1	69/66	HL	1	Bosch magneto	--	--	20:1
	290	291.6	22	1	75/66	HO	1	Bosch magneto	--	--	20:1
	292	291.6	22	1	75/66	HO	1	Bosch magneto	--	--	20:1
	300	299.4	12-15	1	76/66	HR	1	Bosch magneto	--	--	20:1
	302	299.4	12-15	1	76/66	HR	1	Bosch magneto	--	--	20:1
	320	318	18	1	76/70	HR	1	Bosch magneto	--	--	20:1
	335	334.5	18-26	1	78/70	HR	1	Bosch magneto	--	--	20:1
	337	334.5	18-26	1	78/70	HR	1	Bosch magneto	--	--	20:1
	340	334.5	18-26	1	78/70	HR	1	Bosch magneto	--	--	20:1
	342	334.5	18-26	1	78/70	HR	1	Bosch magneto	--	--	20:1
Solar Div. International Harvester	Saturn 10 MV	--	1100 @ 6050	--	--	--	--	--	--	950	--

TABLE D-11. SUMMARY OF CHARACTERISTICS OF POWER SOURCES (BATTERIES/STORAGE CELLS)

Manufacturer	Make	Model	Type	Potential, v	Capacity, amp-hr	Rate, hr	Dimensions, in. Length	Width	Height	Weight	Application
Electric Storage Battery Co.	Exide	DMSC (9)	Pb-acid	--	200	6	3.56	6.19	18.5	40 lb	SeaSpace power systems
		DMSC (11)	Pb-acid	--	250	6	4.31	6.19	18.5	49 lb	
		DMSC (13)	Pb-acid	--	300	6	5.06	6.19	18.5	58 lb	
		DMSC (15)	Pb-acid	--	350	6	5.88	6.25	18.5	66 lb	
		DMSC (17)	Pb-acid	--	400	6	6.62	6.25	18.5	75 lb	
		DMSC (19)	Pb-acid	--	450	6	7.38	6.25	18.69	86 lb	
		DMSC (21)	Pb-acid	--	500	6	8.12	6.25	18.69	94 lb	
		DMSC (23)	Pb-acid	--	550	6	8.88	6.25	18.69	102 lb	
		DMSC (25)	Pb-acid	--	600	6	9.62	6.25	18.69	112 lb	
		DMSC (27)	Pb-acid	--	650	6	10.38	6.25	18.69	120 lb	
		DMSC (29)	Pb-acid	--	700	6	11.12	6.25	18.69	128 lb	
		DMSC (33)	Pb-acid	--	800	6	12.62	6.25	18.69	145 lb	
		ORSC (9)	Pb-acid	--	260	6	3.56	6.19	20.69	50 lb	
		DRSC (11)	Pb-acid	--	325	6	4.31	6.19	20.69	58 lb	
		DRSC (13)	Pb-acid	--	390	6	5.06	6.19	20.69	68 lb	
		ORSC (15)	Pb-acid	--	455	6	5.88	6.25	20.69	77 lb	
		DRSC (17)	Pb-acid	--	520	6	6.62	6.25	20.69	87 lb	
		ORSC (19)	Pb-acid	--	585	6	7.38	6.25	20.88	99 lb	
		ORSC (21)	Pb-acid	--	650	6	8.12	6.25	20.88	108 lb	
		ORSC (23)	Pb-acid	--	715	6	8.88	6.25	20.88	118 lb	
		ORSC (25)	Pb-acid	--	780	6	9.62	6.25	20.88	127 lb	
		ORSC (27)	Pb-acid	--	845	6	10.38	6.25	20.88	136 lb	
		DRSC (29)	Pb-acid	--	910	6	11.12	6.25	20.88	147 lb	
		DTG (11)	Pb-acid	--	360	6	4.31	6.19	23.25	67 lb	
		OTG (13)	Pb-acid	--	432	6	5.06	6.19	23.25	78 lb	
		OTG (15)	Pb-acid	--	504	6	5.88	6.25	23.25	90 lb	
		OTG (17)	Pb-acid	--	576	6	6.62	6.25	23.38	104 lb	
		DTG (19)	Pb-acid	--	648	6	7.38	6.25	23.38	116 lb	
		OTG (21)	Pb-acid	--	720	6	8.12	6.25	23.38	127 lb	
		OTG (23)	Pb-acid	--	792	6	8.88	6.25	23.38	138 lb	

TABLE D-11. SUMMARY OF CHARACTERISTICS OF POWER SOURCES (BATTERIES/STORAGE CELLS) (continued)

Manufacturer	Make	Model	Type	Potential, v	Capacity, amp-hr	Rate, hr	Dimensions, in. Length	Width	Height	Weight	Application
Electric Storage Battery Co.	Exide	DTG (25)	Pb-acid	--	864	6	9.62	6.25	23.38	151 lb	SeaSpace power systems
		DTG (27)	Pb-acid	--	936	6	10.38	6.25	23.38	161 lb	
		DTG (29)	Pb-acid	--	1008	6	11.12	6.25	23.38	172 lb	
		DTG (33)	Pb-acid	--	1152	6	12.62	6.25	23.38	195 lb	
		DTSC (9)	Pb-acid	--	340	6	3.56	6.19	24.25	59 lb	
		DTSC (11)	Pb-acid	--	425	6	4.31	6.19	24.25	71 lb	
		DTSC (13)	Pb-acid	--	510	6	5.06	6.19	24.25	83 lb	
		DTSC (15)	Pb-acid	--	595	6	5.88	6.25	24.25	95 lb	
		DTSC (17)	Pb-acid	--	680	6	6.62	6.25	24.38	108 lb	
		DTSC (19)	Pb-acid	--	765	6	7.38	6.25	24.38	121 lb	
		DTSC (21)	Pb-acid	--	850	6	8.12	6.25	24.38	133 lb	
		DTSC (23)	Pb-acid	--	935	6	8.88	6.25	24.38	145 lb	
		DTSC (25)	Pb-acid	--	1020	6	9.62	6.25	24.38	157 lb	
		DTSC (27)	Pb-acid	--	1105	6	10.38	6.25	24.38	169 lb	
		DTSC (29)	Pb-acid	--	1190	6	11.12	6.25	24.38	181 lb	
		DTSC (33)	Pb-acid	--	1360	6	12.62	6.25	24.38	206 lb	
		DTEC (9)	Pb-acid	--	440	6	3.56	6.19	31.31	22 lb	
		DTEC (11)	Pb-acid	--	550	6	4.31	6.19	31.31	88 lb	
		DTEC (13)	Pb-acid	--	660	6	5.06	6.19	31.31	105 lb	
		DTEC (15)	Pb-acid	--	770	6	5.88	6.25	31.31	121 lb	
		DTEC (17)	Pb-acid	--	880	6	6.62	6.25	31.62	141 lb	
		DTEC (19)	Pb-acid	--	990	6	7.38	6.25	31.62	156 lb	
		DTEC (21)	Pb-acid	--	1100	6	8.12	6.25	31.62	171 lb	
		DMXC (9)	Pb-acid	--	600	6	3.75	8.81	31.31	101 lb	
		DMXC (11)	Pb-acid	--	750	6	4.50	8.81	31.31	123 lb	
		DMXC (13)	Pb-acid	--	900	6	5.25	8.81	31.31	149 lb	
		DMXC (15)	Pb-acid	--	1050	6	6.00	8.81	31.31	169 lb	
		DMXC (17)	Pb-acid	--	1200	6	6.75	8.81	31.31	191 lb	
		DMXC (19)	Pb-acid	--	1350	6	7.50	8.81	31.31	211 lb	
		DMXC (21)	Pb-acid	-	1500	6	8.25	8.81	31.31	232 lb	
		DMXC (25)	Pb-acid	--	1900	6	9.78	8.81	31.62	275 lb	

TABLE D-11. SUMMARY OF CHARACTERISTICS OF POWER SOURCES (BATTERIES/STORAGE CELLS) (continued)

Manufacturer	Make	Model	Type	Potential, v	Capacity, amp-hr	Rate, hr	Dimensions, in. Length	Width	Height	Weight	Application
Electric Storage Battery Co.	Exide	DMEC (7)	Pb-acid	--	510	6	3.06	8.81	31.31	90 lb	SeaSpace power systems
		DMEC (9)	Pb-acid	--	680	6	3.75	8.81	31.31	106 lb	
		DMEC (11)	Pb-acid	--	850	6	4.50	8.81	31.31	129 lb	
		DMEC (13)	Pb-acid	--	1020	6	5.25	8.81	31.31	152 lb	
		DMEC (15)	Pb-acid	--	1190	6	6.00	8.81	31.31	174 lb	
		DMEC (17)	Pb-acid	--	1360	6	6.75	8.81	31.31	198 lb	
		DMEC (19)	Pb-acid	--	1530	6	7.50	8.81	31.31	221 lb	
		DMEC (21)	Pb-acid	--	1700	6	8.25	8.81	31.31	242 lb	
		DMEC (25)	Pb-acid	--	2040	6	9.78	8.81	31.62	287 lb	
		MF 1	--	6	8	6	--	--	--	5 lb	--
		MF 2	--	12	6	6	--	--	--	7.5 lb	--
General Electric Co.	--	41B001AB01	--	1.2	0.75	1	--	0.87 0	2.04	0.19 lb	Aerospace
		41B003AB02	--	1.2	3	1	--	1.25 0	2.86	0.35 lb	Aerospace
		41B005AB04	--	1.2	5	1	--	1.30 0	6.72	0.50 lb	Aerospace
		42B003AB02	--	1.2	3	1	2.00	0.66	2.88	0.35 lb	Aerospace
		42B004AB02	--	1.2	4	1	2.12	0.82	3.12	0.47 lb	Aerospace
		42B006AB01	--	1.2	6	1	2.12	0.82	3.56	0.60 lb	Aerospace
		42B012AB01	--	1.2	12	1	3.02	1.10	4.68	1.25 lb	Aerospace
		42B020AB01	--	1.2	20	1	3.02	1.78	4.68	2.00 lb	Aerospace
		42B901AA01	--	2.4	0.08	--	0.54	0.94 0	--	0.8 oz	--
		42B901AA01	--	3.6	0.08	--	0.76	0.94 0	--	1.2 oz	--
		42B901AA01	--	4.8	0.08	--	0.97	0.94 0	--	1.4 oz	--
		42B901AA01	--	6	0.08	--	1.19	0.94 0	-	1.6 oz	--
		42B901AA01	--	12	0.08	--	2.27	0.94 0	--	3.0 oz	--
		42B902AA02	--	2.4	0.18	--	0.72	1.02 0	--	1.3 oz	--
		42B902AA02	--	3.6	0.18	--	1.03	1.02 0	--	1.7 oz	--
		42B902AA02	--	4.8	0.18	--	1.33	1.02 0	--	2.2 oz	--
		42B902AA02	--	6	0.18	--	1.64	1.02 0	--	2.5 oz	--
		42B902AA02	--	12	0.18	--	3.17	1.02 0	--	4.7 oz	--
		42B903AA02	--	24	0.25	--	0.54	1.40 0	--	2.0 oz	--
		42B903AA02	--	3.6	0.25	--	0.76	1.40 0	--	2.5 oz	--
		42B903AA02	--	4.8	0.25	--	0.97	1.40 0	--	3.2 oz	--
		42B903AA02	--	6	0.25	--	1.19	1.40 0	--	3.8 oz	--

TABLE D-11. SUMMARY OF CHARACTERISTICS OF POWER SOURCES (BATTERIES/STORAGE CELLS) (continued)

Manufacturer	Make	Model	Type	Potential, v	Capacity, amp-hr	Rate, hr	Dimensions, in. Length	Width	Height	Weight	Application
General Electric Co.	--	428903AA02	--	12	0.25	--	2.27	1.40	0 --	6.8 oz	--
		42B905AA02	--	2.4	0.5	--	0.88	1.39	0 --	2.9 oz	--
		42B905AA02	--	3.6	0.5	--	1.27	1.39	D --	3.9 oz	--
		42B905AA02	--	4.8	0.5	-	1.66	1.39	0 --	5.0 oz	--
		42B905AA02	--	6	0.5	--	2.04	1.39	0 --	5.9 oz	--
		428905AA02	--	12	0.5	--	3.98	1.39	0 --	11.2 oz	--
		42B908AA02	--	2.4	0.8	--	0.80	2.04	D --	7.1 oz	--
		428908AA02	--	3.6	0.8	--	1.14	2.04	0 --	9.4 oz	--
		42B908AA02	--	4.8	0.8	--	1.49	2.04	D --	11.6 oz	--
		42B908AA02	--	6	0.8	--	1.83	2.04	D --	13.9 oz	--
		42B908AA02	--	12	0.8	--	3.54	2.04	D --	25.0 oz	--
		42B918AA02	--	2.4	1.6	--	1.33	2.04	0 --	10.4 oz	--
		42B918AA02	--	3.6	1.6	--	1.94	2.04	D --	14.3 oz	--
		42B918AA02	--	4.8	1.6	--	2.55	2.04	0 --	18.2 oz	--
		42B918AA02	--	6	1.6	--	3.16	2.04	0 --	22.1 oz	--
		428918AA02	--	12	1.6	--	6.21	2.04	0 --	41.5 oz	--
		41B001AA10	--	6	1	--	5.0	1.0	1.7	0.6 lb	--
		41B001AA10	--	12	1	--	5.0	2.0	1.7	1.1 lb	--
		41B001AA10	--	24	1	--	5.0	4.0	1.7	2.3 lb	--
		41B002AA04	--	6	2	--	7.1	1.4	1.6	1.2 lb	--
		41B002AA04	--	12	2	--	7.1	2.8	1.6	2.3 lb	--
		41B002AA04	--	24	2	--	7.1	5.7	1.6	4.7 lb	--
		41B004AA05	--	6	3.5	--	7.1	1.4	2.4	2.2 lb	--
		41B004AA05	--	12	3.5	--	7.1	2.8	2.4	4.5 lb	--
		41B004AA05	--	24	3.5	--	7.1	5.7	2.4	10.0 lb	--
		418004AA07	--	6	4	--	1.3	2.1	8.4	2.4 lb	--
		41B004AA07	--	12	4	--	2.6	2.1	8.4	4.9 lb	--
		41B004AA07	--	24	4	--	5.2	2.1	8.4	10.5 lb	--
		42B001AD02	Ni-Cd	--	0.8	1	1.5	0.5	1.5	0.1 lb	--
		42B003A001	Ni-Cd	--	3	1	1.9	0.5	4.0	0.3 lb	--
		42B004AA12	Ni-Cd	--	4	1	2.4	0.6	2.9	0.4 lb	--
		42B009AA02	Ni-Cd	--	7.2	1	3.7	0.6	4.1	0.9 lb	--
		42B007AA01	--	1.2	7	1	2.22	1.06	3.88	0.88 lb	--
		42B015AA01	--	1.2	15	1	3.00	1.16	4.56	1.5 lb	--
		42B022AA01	--	1.2	22	1	2 22	1.06	8.19	1.85 lb	--

TABLE D-11. SUMMARY OF CHARACTERISTICS OF POWER SOURCES (BATTERIES/STORAGE CELLS) (continued)

Manufacturer	Make	Model	Type	Potential, v	Capacity, amp-hr	Rate, hr	Dimensions, in. Length	Width	Height	Weight	Application
General Electric Co.	--	42B035AA01	--	1.2	35	1	3.00	1.16	8.63	3.22 lb	--
		42B052AA01	--	1.2	52	1	3.00	1.66	8.63	4.47 lb	--
		42B080AA01	--	1.2	80	1	3.00	2.41	8.63	6.38 lb	--
		42B104AA01	--	1.2	104	1	3.00	3.16	8.63	8.32 lb	--
		42B160AA01	--	1.2	160	1	3.00	4.72	8.63	12.35 lb	--
		43B011AC02	--	1.2	160	1	2.4	1.1	6.9	1.2 lb	--
		43B022AC02	--	1.2	22	1	3.2	1.1	8.2	2.0 lb	--
		43B034AC01	--	1.2	34	1	3.1	1.4	9.3	3.5 lb	--
		43B070AC02	--	1.2	70	1	5.0	1.9	8.3	6.0 lb	--
		43B080AC02	--	1.2	80	1	3.0	2.4	9.6	6.7 lb	--
		43B085AA01	--	1.2	85	1	5.9	2.6	7.9	9.1 lb	--
		43B100AA01	--	1.2	100	1	5.9	3.2	8.1	11.5 lb	--
		43B140AA01	--	1.2	140	1	5.9	4.4	8.1	14.9 lb	--
		43B160AA02	--	1.2	160	1	4.7	3.0	9.0	13.0 lb	--
		43B170AA01	--	1.2	170	1	5.9	5.2	8.1	18.8 lb	--
		43B200AA01	--	1.2	200	1	5.9	6.3	8.1	22.2 lb	--
		43B360AA01	--	1.2	360	1	7.2	6.4	11.6	40.0 lb	--
Gould-National Batteries, Inc.	--	20B	--	--	0.02	--	--	0.449 D	0.201	0.04 oz	Cell
		50B	--	--	0.05	--	--	0.606 D	0.230	0.09 oz	Cell
		100B	--	--	0.1	--	--	0.984 D	0.240	0.28 oz	Cell
		150B	--	--	0.15	--	--	0.984 D	0.260	0.3 oz	Cell
		225B	--	--	0.225	--	--	0.984 D	0.339	0.41 oz	Cell
		225BH	--	--	0.225	--	--	0.984 D	0.347	0.44 oz	Cell
		450B	--	--	0.45	--	--	1.689 D	0.299	1.1 oz	Cell
		500BH	--	--	0.5	--	--	1.340 D	0.374	0.9 oz	Cell
		2.4V/50B	--	2.4	0.05	--	--	0.628 D	0.46	0.08 oz	--
		3.6V/50B	--	3.6	0.05	--	--	0.628 D	0.70	0.12 oz	--
		4.8V/50B	--	4.8	0.05	--	--	0.628 D	0.93	0.16 oz	--
		6.0V/50B	--	6	0.05	--	--	0.628 D	1.17	0.20 oz	--
		7.2V/50B	--	7.2	0.05	--	--	0.628 D	1.40	0.24 oz	--

TABLE D-11. SUMMARY OF CHARACTERISTICS OF POWER SOURCES (BATTERIES/STORAGE CELLS) (continued)

Manufacturer	Make	Model	Type	Potential, v	Capacity, amp-hr	Rate, hr	Dimensions, in. Length	Width	Height	Weight	Application
Gould-National Batteries, Inc.	--	8.4V/50B	--	8.4	0.05	--	--	0.628 D	1.64	0.28 oz	--
		9.6V/50B	--	9.6	0.05	--	--	0.628 D	1.87	0.32 oz	--
		10.8V/50B	--	10.8	0.05	--	--	0.628 D	2.11	0.36 oz	--
		12.0V/50B	--	12	0.05	--	--	0.628 D	2.34	0.40 oz	--
		2.4V/100B	--	2.4	0.1	--	--	1.004 D	0.505	0.58 oz	--
		3.6V/100B	--	3.6	0.1	--	--	1.004 D	0.750	0.86 oz	--
		4.8V/100B	--	4.8	0.1	--	--	1.004 D	0.995	1.15 oz	--
		6.0V/100B	--	6	0.1	--	--	1.004 D	1.240	1.43 oz	--
		7.2V/100B	--	7.2	0.1	--	--	1.004 D	1.485	1.72 oz	--
		8.4V/100B	--	8.4	0.1	--	--	1.004 D	1.730	2.01 oz	--
		9.6V/100B	--	9.6	0.1	--	--	1.004 D	1.975	2.29 oz	--
		10.8V/100B	--	10.8	0.1	--	--	1.004 D	2.220	2.57 oz	--
		12.0V/100B	--	12	0.1	--	--	1.004 D	2.465	2.86 oz	--
		2.4V/150B	--	2.4	0.15	--	--	1.004 D	0.545	0.65 oz	--
		3.6V/150B	--	3.6	0.15	--	--	1.004 D	0.810	0.97 oz	--
		4.8V/150B	--	4.8	0.15	--	--	1.004 D	1.075	1.29 oz	--
		6.0V/150B	--	6	0.15	--	--	1.004 D	1.340	1.61 oz	--
		7.2V/150B	--	7.2	0.15	--	--	1.004 D	1.605	1.93 oz	--
		8.4V/150B	--	8.4	0.15	--	--	1.004 D	1.870	2.25 oz	--
		9.6V/150B	--	9.6	0.15	--	--	1.004 D	2.135	2.67 oz	--
		10.8V/150B	--	10.8	0.15	--	--	1.004 D	2.400	2.90 oz	--
		12.0V/150B	--	12	0.15	--	--	1.004 D	2.665	3.22 oz	--
		2.4V/225B	--	2.4	0.225	--	--	1.004 D	0.703	0.85 oz	--
		3.6V/225B	--	3.6	0.225	--	--	1.004 D	1.047	1.29 oz	--
		4.8V/225B	--	4.8	0.225	--	--	1.004 D	1.391	1.73 oz	--
		6.0V/225B	--	6	0.225	--	--	1.004 D	1.735	2.17 oz	--
		7.7V/225B	--	7.2	0.225	--	--	1.004 D	2.079	2.60 oz	--
		8.4V/225B	--	8.4	0.225	--	--	1.004 D	2.423	3.04 oz	--
		9.6V/225B	--	9.6	0.225	--	--	1.004 D	2.767	3.48 oz	--
		10.8V/225B	--	10.8	0.225	--	--	1.004 D	3.111	3.92 oz	--
		12.0V/225B	--	12	0.225	--	--	1.004 D	3.455	4.35 oz	--
		2.4V/225BH	--	2.4	0.225	--	--	1.004 D	0.717	0.92 oz	--

TABLE 0-11. SUMMARY OF CHARACTERISTICS OF POWER SOURCES (BATTERIES/STORAGE CELLS) (continued)

Manufacturer	Make	Model	Type	Potential, v	Capacity, amp-hr	Rate, hr	Dimensions, in. Length	Width	Height	Weight	Application
Gould-National Batteries, Inc.	--	3.6V/225BH	--	3.6	0.225	--	--	1.004 D	1.068	1.39 oz	--
		4.8V/225BH	--	4.8	0.225	--	--	1.004 D	1.419	1.86 oz	---
		6.0V/225BH	--	6	0.225	--	--	1.004 D	1.770	2.32 oz	--
		7.2V/225BH	--	7.2	0.225	--	--	1.004 D	2.121	2.79 oz	--
		8.4V/225BH	--	8.4	0.225	--	--	1.004 D	2.472	3.25 oz	--
		9.6V/225BH	--	9.6	0.225	--	--	1.004 D	2.823	4.72 oz	--
		10.8V/225BH	--	10.8	0.225	--	--	1.004 D	3.174	4.19 oz	--
		12.0V/225BH	--	12	0.225	--	--	1.004 D	3.525	4.65 oz	--
		2.4V/450B	--	2.4	0.45	--	--	1.709 D	0.623	2.27 oz	--
		3.6V/450B	--	3.6	0.45	--	--	1.7090	0.927	3.43 oz	--
		4.8V/450B	--	4.8	0.45	--	--	1.709 D	1.231	4.59 oz	--
		6.0V/450B	--	6	0.45	--	--	1.709 D	1.535	5.75 oz	--
		7.2V/450B	--	7.2	0.45	--	--	1.709 D	1.839	6.92 oz	--
		8.4V/450B	--	8.4	0.45	--	--	1.709 D	2.143	8.08 oz	--
		9.6V/450B	--	9.6	0.45	--	--	1.709 D	2.447	9.24 oz	--
		10.8V/450B	--	10.8	0.45	--	--	1.709 D	2.751	10.4 oz	--
		12.0V/450B	--	12	0.45	--	--	1.709 D	3.055	11.57 oz	--
		2.4V/500BH	--	2.4	0.5	--	--	1.361 D	0.797	1.85 oz	--
		3.6V/500BH	--	3.6	0.5	--	--	1.361 D	1.179	2.79 oz	--
		4.8V/500BH	--	4.8	0.5	--	--	1.361 D	1.567	3.70 oz	--
		6.0V/500BH	--	6	0.5	--	--	1.361 D	1.955	4.55 oz	--
		7.2V/500BH	--	7.2	0.5	--	--	1.361 D	2.343	5.58 oz	--
		8.4V/500BH	--	8.4	0.5	--	--	1.361 D	2.731	6.52 oz	--
		9.6V/500BH	--	9.6	0.5	--	--	1.361 D	3.119	7.45 oz	--
		10.8V/500BH	--	10.8	0.5	--	--	1.361 D	3.507	8.38 oz	--
		12.0V/500BH	--	12	0.5	--	--	1.361 D	3.895	9.32 oz	--
		475SC	--	--	0.475	--	--	0.557 D	1.952	0.75 oz	Cell
		600SC	--	--	0.6	--	--	0.617 D	1.96	0.76 oz	Cell
		750SC	--	--	0.75	--	--	1.02 D	0.98	1.12 oz	Cell
		1.2SC	--	--	1.2	--	--	0.893 D	1.739	1.72 oz	Cell
		1.8SC	--	--	1.8	--	--	1.02 D	1.952	2.44 oz	Cell
		2.3SC	--	--	2.3	--	--	1.292 D	1.51	2.75 oz	Cell

TABLE D-11. SUMMARY OF CHARACTERISTICS OF POWER SOURCES (BATTERIES/STORAGE CELLS) (continued)

Manufacturer	Make	Model	Type	Potential, v	Capacity, amp-hr	Rate, hr	Dimensions, in. Length	Width	Height	Weight	Application
Gould-National Batteries, Inc.	--	4.0SC	--	--	4	--	--	1.29 0	2.38	4.56 oz	Cell
		7.0SC	--	--	7	--	--	1.29 0	3.56	7.6 oz	Cell
		MP201	--	6	0.6	--	3.437	0.687	2.25	5.8 oz	--
		MP202	--	12	0.6	--	3.437	1.375	2.25	11.6 oz	--
		MP203	--	12	0.6	--	6.875	0.687	2.35	11.6 oz	--
		MP205	--	24	0.6	--	3.437	2.75	2.25	23.2 oz	--
		MP207	--	24	0.6	--	6.875	1.375	2.25	23.2 oz	--
		MP401	--	--	1.2	--	5	1	1.95	10.5 oz	--
		MP402	--	--	1.2	--	5	2	1.95	20.5 oz	--
		MP403	--	--	1.2	--	10	1	1.95	20.5 oz	--
		MP405	--	--	1.2	--	5	4	1.95	41.5 oz	--
		MP407	--	--	1.2	--	10	2	1.95	41.5 oz	--
		MP601	--	--	2.3	--	7.031	1.406	1.843	18.4 oz	--
		MP602	--	--	2.3	--	7.031	2.812	1.843	36.5 oz	--
		MP603	--	--	2.3	--	14.062	1.406	1.843	36.7 oz	--
		MP605	--	--	2.3	--	7.031	5.625	1.843	72.2 oz	--
		MP607	--	--	2.3	--	14.062	2.812	1.843	72.2 oz	--
		MP701	--	--	4	--	7.031	1.406	2.625	29 oz	--
		MP702	--	--	4	--	7.031	2.813	2.625	58 oz	--
		MP703	--	--	4	--	14.063	1.406	2.625	58 oz	--
		MP705	--	--	4	--	7.031	5.625	2.625	115 oz	--
		MP707	--	--	4	--	14.063	2.813	2.625	115 oz	--
		CS202	--	2.4	0.6	--	--	0.613 0	3.875	1.5 oz	--
		CS203	--	3.6	0.6	--	--	0.613 0	5.828	2.3 oz	--
		CS204	--	4.8	0.6	--	--	0.613 0	7.781	3.1 oz	--
		CS205	--	6	0.6	--	--	0.613 0	9.734	3.9 oz	--
		CS302	--	2.4	0.75	--	--	1.02 0	1.859	2.2 oz	--
		CS303	--	3.6	0.75	--	--	1.02 0	2.781	3.3 oz	--
		CS304	--	4.8	0.75	--	--	1.02 0	3.718	4.4 oz	--
		CS305	--	6	0.75	--	--	1.02 0	4.656	5.5 oz	--
		CS402	--	2.4	1.2	--	--	0.893 0	3.343	3.5 oz	--

TABLE D-11. SUMMARY OF CHARACTERISTICS OF POWER SOURCES (BATTERIES/STORAGE CELLS) (continued)

Manufacturer	Make	Model	Type	Potential, v	Capacity, amp-hr	Rate, hr	Dimensions, in. Length	Width	Height	Weight	Application
Gould-National Batteries, Inc.	--	CS403	--	3.6	1.2	--	--	0.893 D	5.031	5.3 oz	--
		CS404	--	4.8	1.2	--	--	0.893 D	6.703	7.1 oz	--
		CS405	--	6	1.2	--	--	0.893 D	8.375	8.8 oz	--
		CS502	--	2.4	1.8	--	--	1.02 D	3.812	5.3 oz	--
		CS503	--	3.6	1.8	--	--	1.02 D	5.718	7.9 oz	--
		CS504	--	4.8	1.8	--	--	1.02 D	7.64	10.6 oz	--
		CS505	--	6	1.8	--	--	1.02 D	9.546	13.2 oz	--
		CS602	--	2.4	2.3	--	--	1.292 D	2.875	5.6 oz	--
		CS603	--	3.6	2.3	--	--	1.292 D	4.328	8.4 oz	--
		CS604	--	4.8	2.3	--	--	1.292 D	5.781	11.2 oz	--
		CS605	--	6	2.3	--	--	1.292 D	7.218	14 oz	--
		CS702	--	2.4	4	--	--	1.29 D	4.625	9.3 oz	--
		CS703	--	3.6	4	--	--	1.29 D	6.953	14 oz	--
		CS704	--	4.8	4	--	--	1.29 D	9.265	18.6 oz	--
		CS705	--	6	4	--	--	1.29 D	11.593	23.2 oz	--
	Silver Pac	SZR-1L8	Ag-Zn	--	1	--	1.08	0.54	1.56	0.047 lb	--
		SZR-2LC	Ag-Zn	--	2	--	1.08	0.54	2.02	0.069 lb	--
		SZR-4LE	Ag-Zn	--	4	--	1.72	0.59	2.89	0.187 lb	--
		SZR-5LF	Ag-Zn	--	5	--	1.72	0.59	3.36	0.231 lb	--
		SZR-7LG	Ag-Zn	--	7	--	2.08	0.8	2.91	0.281 lb	--
		SZR-13LK	Ag-Zn	--	13	--	2.32	0.75	4.79	0.61 lb	--
		SZR-25LN	Ag-Zn	--	25	--	2.11	0.88	6.8	0.85 lb	--
		SZR-25-LN	Ag-Zn	--	25	--	2.15	3.36	6.8	3.25 lb	--
		SZR-25LP	Ag-Zn	--	25	--	2.06	1.74	4.53	0.9 lb	--
		SZR-30LS	Ag-Zn	--	30	--	3.23	0.89	7.02	1.06 lb	--
		SZR-40LU	Ag-Zn	--	40	--	3.23	1.01	6.85	1.43 lb	--
		SZR-50-5LW	Ag-Zn	--	50	--	5.3	3.23	6.4	8.2 lb	--
		SZR-140L4	Ag-Zn	--	140	--	3.29	2.2	6.91	3.5 lb	--
		SZR-1HB	Ag-Zn	--	1	--	1.08	0.54	1.56	0.047 lb	--
		SZR-2HC	Ag-Zn	--	2	--	1.08	0.54	2.02	0.069 lb	--
		SZR-5HE	Ag-Zn	--	5	--	1.72	0.59	2.89	0.187 lb	--
		SZR-6HF	Ag-Zn	--	6	--	1.72	0.59	3.36	0.251 lb	--

TABLE D-11. SUMMARY OF CHARACTERISTICS OF POWER SOURCES (BATTERIES/STORAGE CELLS) (continued)

Manufacturer	Make	Model	Type	Potential, v	Capacity, amp-hr	Rate, hr	Dimensions, in. Length	Width	Height	Weight	Application
Gould-National Batteries, Inc.	Silver Pac	5ZR-8HG	Ag-Zn	--	8	--	2.08	0.8	2.91	0.3 lb	--
		5ZR-18HK	Ag-Zn	--	18	--	2.32	0.75	4.79	0.6 lb	--
		5ZR-30HN	Ag-Zn	--	30	--	2.11	0.88	6.8	0.85 lb	--
		5ZR-30-4HN	Ag-Zn	--	30	--	2.15	3.36	6.8	3.35 lb	--
		5ZR-30HP	Ag-Zn	--	30	--	2.06	1.74	4.53	0.9 lb	--
		5ZR-40HS	Ag-Zn	--	40	--	3.23	0.89	7.02	1.2 lb	--
		5ZR-55HU	Ag-Zn	--	55	--	3.23	1.01	6.85	1.5 lb	--
		5ZR-60-5HW	Ag-Zn	--	60	--	5.3	3.23	6.4	8.3 lb	--
		5ZR-150HY	Ag-Zn	--	150	--	3.29	2.2	6.91	3.44 lb	--
		5ZFA-1HB	Ag-Zn	--	1	--	1.08	0.54	1.56	0.061 lb	--
		5ZFA-2HC	Ag-Zn	--	2	--	1.08	0.54	2.02	0.073 lb	--
		5ZFA-6HE	Ag-Zn	--	6	--	1.72	0.59	2.89	0.208 lb	--
		5ZFA-7HF	Ag-Zn	--	7	--	1.72	0.59	3.36	0.231 lb	--
		5ZFA-10HG	Ag-Zn	--	10	--	2.08	0.8	2.91	0.406 lb	--
		5ZFA-25HK	Ag-Zn	--	25	--	2.32	0.75	4.79	0.656 lb	--
		5ZFA-35HN	Ag-Zn	--	35	--	2.11	0.88	6.8	0.85 lb	--
		5ZFA-35-4HN	Ag-Zn	--	35	--	2.15	3.36	6.8	3.5 lb	--
		5ZFA-40HP	Ag-Zn	--	40	--	2.06	1.74	4.53	0.9 lb	--
		5ZFA-50HS	Ag-Zn	--	50	--	3.23	0.89	7.02	1.2 lb	--
		5ZFA-65HU	Ag-Zn	--	65	--	3.23	1.01	6.85	1.5 lb	--
		5ZFA-70-5HW	Ag-Zn	--	70	--	5.3	3.23	6.4	8.3 lb	--
		5ZFA-180HY	Ag-Zn	--	180	--	3.29	2.2	6.91	3.7 lb	--
		5ZMP-1.5 HB	Ag-Zn	--	1.5	--	1.08	0.54	1.56	0.054 lb	--
		5ZMP-3HC	Ag-Zn	--	3	--	1.08	0.54	2.02	0.095 lb	--
		5ZMP-7HC	Ag-Zn	--	7	--	1.72	0.59	2.89	0.219 lb	--
		5ZMP-8HF	Ag-Zn	--	8	--	1.72	0.59	3.36	0.271 lb	--
		5ZMP-12HG	Ag-Zn	--	12	--	2.08	0.8	2.91	0.438 lb	--
		5ZMP-30HK	Ag-Zn	--	30	--	2.32	0.75	4.79	0.75 lb	--
		5ZMP-40HN	Ag-Zn	--	40	--	2.11	0.88	6.8	1.05 lb	--
		5ZMP-40-4HN	Ag-Zn	--	40	--	2.15	3.36	6.8	3.8 lb	--

TABLE D-11. SUMMARY OF CHARACTERISTICS OF POWER SOURCES (BATTERIES/STORAGE CELLS) (continued)

Manufacturer	Make	Model	Type	Potential, v	Capacity, amp-hr	Rate, hr	Dimensions, in. Length	Width	Height	Weight	Application
Gould-National Batteries, Inc.	Silver Pac	SZMP-45HP	Ag-Zn	--	45	--	2.06	1.74	4.53	1.13 lb	--
		SZMP-55H5	Ag-Zn	--	55	--	3.23	0.89	7.02	1.45 lb	--
		SZMP-75HU	Ag-Zn	--	75	--	3.23	1.01	6.85	1.77 lb	--
		SZMP-90-5HW	Ag-Zn	--	90	--	5.3	3.23	6.4	9.35 lb	--
		SZMP-220HY	Ag-Zn	--	220	--	3.29	2.2	6.91	4.03 lb	--
Mallory Battery Co.	--	RM-1	Hg	1.4	1	--	--	0.622 0	0.645	0.43 oz	--
		RM-4	Hg	1.4	3.4	--	--	1.19 0	0.645	1.46 oz	--
		MN-1400	Manganese alkaline	1.5	5	--	--	1.105 0	1.93	2.34 oz	--
Nat'l. Automated Inds. Inc.	Mi-T-Cel	L145	--	1.[illegible]	--	--	4	1.125	0.438	1 oz	Toys, games, small equipment
Sonotone Corp.	--	S-101	Ni-Cd	--	0.39	--	--	0.55 0	1.947	0.7 oz	Cell
		S-102	Ni-Cd	--	0.71	--	--	1.022 0	1.005	1.2 oz	
		S-103	Ni-Cd	--	4	--	--	1.333 0	2.385	5.5 oz	
		S-104	Ni-Cd	--	1.8	--	--	1.022 0	1.93	2.6 oz	
		S-106	Ni-Cd	--	2.8	--	--	1.022 0	3.055	4 oz	
		S-108	Ni-Cd	--	6.6	-	--	1.333 0	3.49	8.3 oz	
		S-113	Ni-Cd	--	1.2	--	--	0.365 0	1.65	1.6 oz	
		S-114	Ni-Cd	--	0.43	--	--	1.022 0	0.695	0.78 oz	
		S-115	Ni-Cd	--	0.8	--	--	1.242 0	0.745	1.5 oz	
		S-116	Ni-Cd	--	0.09	--	--	0.53 0	0.605	0.25 oz	
		S-117	Ni-Cd	--	1.7	--	--	1.333 0	1.155	2.6 oz	
		S-121	Ni-Cd	--	1.4	--	--	1.242 0	1.05	2.3 oz	
		S-126	Ni-Cd	--	0.17	--	--	0.625 0	0.6	0.4 oz	
		S-131	Ni-Cd	--	0.225	--	--	0.99 0	0.35	0.46 oz	
		S-132	Ni-Cd	--	0.15	--	--	0.99 0	0.25	0.34 oz	
		S-133	Ni-Cd	--	0.5	--	--	1.35 0	0.36	1 oz	
		S-134	Ni-Cd	--	0.02	--	--	0.45 0	0.2	0.05 oz	
		S-140	Ni-Cd	--	0.57	--	--	0.59 0	1.905	1 oz	
		S-142	Ni-Cd	--	1.4	--	--	1 0	1.26	1.9 oz	
		S-143	Ni-Cd	--	1.2	--	--	1 0	1.15	1.7 oz	
		S-5-113	Ni-Cd	6	1.4	5	5	1	1.75	0.75 lb	Module battery

TABLE D-11. SUMMARY OF CHARACTERISTICS OF POWER SOURCES (BATTERIES/STORAGE CELLS) (continued)

Manufacturer	Make	Model	Type	Potential, v	Capacity, amp-hr	Rate, hr	Dimensions, in. Length	Width	Height	Weight	Application
Sonotone Corp.	--	10-S-113	Ni-Cd	12	1.4	5	5	2	1.75	1.5 lb	Module battery
		20-S-113	Ni-Cd	24	1.4	5	10	2	1.75	3 lb	
		20-S-113	Ni-Cd	24	1.4	5	5	4	1.75	3 lb	
		5-S-104	Ni-Cd	6	1.9	5	5.938	1.188	2	1.25 lb	
		10-S-104	Ni-Cd	12	1.9	5	5.938	2.375	2	2.5 lb	
		20-S-104	Ni-Cd	24	1.9	5	11.88	2.375	2	5 lb	
		20-S-104	Ni-Cd	24	1.9	5	5.938	4.75	2	5 lb	
		5-S-103	Ni-Cd	6	4	5	7.5	1.5	2.5	2.25 lb	
		10-S-103	Ni-Cd	12	4	5	7.5	3	2.5	4.5 lb	
		20-S-103	Ni-Cd	24	4	5	15	3	2.5	9 lb	
		20-S-103	Ni-Cd	24	4	5	7.5	6	2.5	9 lb	
		LB103	Ni-Cd	5	4	5	2.688	2.688	3.875	1.75 lb	Lantern battery
		LB108	Ni-Cd	5	6.5	5	2.688	2.688	3.875	2.5 lb	Lantern battery
		1H120	Ni-Cd	--	0.8	--	1.16	0.68	2.258	1.7 oz	Vented battery cell
		2H120	Ni-Cd	--	2	--	1.16	0.675	3.89	3.2 oz	
		28H120	Ni-Cd	--	2.5	--	1.16	0.68	4	3.3 oz	
		3H120	Ni-Cd	--	4	--	2.145	0.65	4.016	5.8 oz	
		5H120	Ni-Cd	--	6.5	--	2.18	0.955	4.06	9.1 oz	
		10H120	Ni-Cd	--	13	--	2.74	1.195	4.75	1.25 lb	
		12H120	Ni-Cd	--	13	--	2.419	1.08	6.95	1.25 lb	
		20H120	Ni-Cd	--	21	--	3.11	1.657	5.446	2 lb	
		24H120	Ni-Cd	--	24	--	3.18	1.075	8.278	2.25 lb	
		36H120	Ni-Cd	--	36	--	3.135	1.39	9.4	3.5 lb	
		41H120	Ni-Cd	--	40	--	5.11	1	8.5	3.9 lb	
		65H120	Ni-Cd	--	72	--	4.98	1.35	11.375	6.6 lb	
		81H120	Ni-Cd	--	80	--	5.12	1.924	8.51	6.6 lb	
		5BM220	Ni-Cd	--	5.5	--	2.11	0.85	3.875	9.1 oz	
		12M220	Ni-Cd	--	13.5	--	2.419	1.08	6.95	1.25 lb	
		24M220	Ni-Cd	--	25	--	3.18	1.075	8.278	2.1 lb	
		36M220	Ni-Cd	--	36	--	3.135	1.39	9.4	3.5 lb	
		65M220	Ni-Cd	--	72	--	4.98	1.35	11.375	6.6 lb	
		100M220	Ni-Cd	--	111	--	6.813	2.172	8.73	11 lb	

TABLE D-11. SUMMARY OF CHARACTERISTICS OF POWER SOURCES (BATTERIES/STORAGE CELLS) (continued)

Manufacturer	Make	Model	Type	Potential, v	Capacity, amp-hr	Rate, hr	Dimensions, in. Length	Width	Height	Weight	Application
Sonotone Corp.	--	280M220	Ni-Cd	--	260	--	9.126	3.655	9.925	21 lb	Vented battery cell
		15M320	Ni-Cd	--	16	--	2.317	1.063	5.548	1.06 lb	
		20M320	Ni-Cd	--	24	--	3.11	1.657	5.446	2.06 lb	
		40M320	Ni-Cd	--	44	--	4.05	1.66	7.437	3.9 lb	
		60M320	Ni-Cd	--	58	--	4.718	1.771	8.542	5 lb	
		100M320	Ni-Cd	--	121	--	6.813	2.172	0.73	11.1 lb	
		3L420	Ni-Cd	--	4.7	--	2.145	0.65	4.016	6.3 oz	
		5L420	Ni-Cd	--	7.5	--	2.185	0.955	4.06	9.4 oz	
		5BL420	Ni-Cd	--	6	--	2.11	0.85	3.875	9.3 oz	
		10L420	Ni-Cd	--	15	--	2.74	1.195	4.75	1.2 lb	
		20L420	Ni-Cd	--	25	--	3.11	1.657	5.548	2.06 lb	
		60L420	Ni-Cd	--	7.0	--	4.718	1.771	8.542	5.2 lb	
		210L420	Ni-Cd	--	230	--	8.14	3.17	9.41	20 lb	
		CA-4	Ni-Cd	24	25	5	10.5	7.813	8.75	55 lb	Commercial aircraft battery
		CA-5	Ni-Cd	24	39	5	10.5	9.938	10.25	80 lb	
		CA-7	Ni-Cd	24	13	5	8.375	7.75	7.75	33 lb	
		CA-9	Ni-Cd	24	25	5	10.5	7.813	8.75	55 lb	
		CA-10N	Ni-Cd	24	13	5	12.75	5.688	5.375	26 lb	
		CA-15	Ni-Cd	12	15	8	7.938	3.875	7.625	16 lb	
		CA-20	Ni-Cd	24	24	5	12	9.813	6.625	50 lb	
		CA-20H	Ni-Cd	24	20	5	12	9.813	6.625	49 lb	
		CA-24A	Ni-Cd	12	26	5	9	4.688	8.625	26 lb	
		CA-24B	Ni-Cd	12	26	5	9	4.688	8.625	24 lb	
		CA-3 H	Ni-Cd	24	4	5	14.12	2.375	4.5	10 lb	
		CA-40	Ni-Cd	24	42	5	15	10.38	9.625	95 lb	
		CA-44A	Ni-Cd	12	44	5	12.88	6.125	10.81	48 lb	
		CA-44B	Ni-Cd	12	44	5	12.88	6.125	10.91	44 lb	
		CA-51H	Ni-Cd	24	7	5	10.06	4.75	4.625	16 lb	
		CA-53	Ni-Cd	24	7	5	10.06	4.75	4.625	16 lb	
		CA-88A	Ni-Cd	12	60	5	13.94	7.25	10.81	66 lb	
		CA-88B	Ni-Cd	12	60	5	13.94	7.25	10.81	60 lb	

TABLE D-11. SUMMARY OF CHARACTERISTICS OF POWER SOURCES (BATTERIES/STORAGE CELLS) (continued)

Manufacturer	Make	Model	Type	Potential, v	Capacity, amp-hr	Rate, hr	Dimensions, in. Length	Width	Height	Weight	Application
Sonotone Corp.	--	CA-101H	Ni-Cd	24	13	5	12.44	5.525	5.562	26 lb	Commercial aircraft battery
		CA-121	Ni-Cd	26	13	5	9.438	7.938	7.75	37 lb	
		CA-727-3	Ni-Cd	24	25	5	10.5	7.938	8.75	55 lb	
		MA-2	Ni-Cd	24	60	2	11	17.12	12.25	160 lb	Military aircraft battery
		MA-4	Ni-Cd	24	22	2	10.5	7.812	8.75	55 lb	
		MA-5	Ni-Cd	24	34	2	10.5	9.938	10.25	80 lb	
		MA-7	Ni-Cd	24	11	2	8.375	7.75	7.75	34 lb	
		MA-8	Ni-Cd	24	22	2	10.5	7.812	8.75	55 lb	
		MA-9	Ni-Cd	24	22	2	10.5	7.812	8.75	55 lb	
		MA-11	Ni-Cd	24	22	2	10.5	7.812	8.75	55 lb	
		MA-300H	Ni-Cd	24	3.6	2	9	3.562	5.25	10.5 lb	
		MA-500H	Ni-Cd	24	5.7	2	11.31	4.75	4.625	15 lb	
		BB-406/U	Ni-Cd	18	6.5	5	8.25	12.06	6.938	11 lb	Special purpose battery
		BB-407/U	Ni-Cd	18	6.5	5	8.25	12.06	6.938	11 lb	
		BB-421/U	Ni-Cd	26.5	6.5	5	12.33	5.125	4.812	15 lb	
		20-S-102	Ni-Cd	24	0.62	5	7.375	5.094	2.25	2.5 lb	
		BB-422/U	Ni-Cd	24	13.5	5	11.22	5.25	7.5	31 lb	
		BB-424/U	Ni-Cd	24	25	5	12.62	7.125	8.625	52 lb	
		BB-419/U	Ni-Cd	6	15	5	5.688	2.438	6.25	7 lb	
		BB-426/U	Ni-Cd	24	1.2	5	10.125	3.06	10.5	14 lb	
		BB-429/U	Ni-Cd	6	15	5	7.812	2.469	6.25	7 lb	
		CE-1	Ni-Cd	24	0.8	5	4.75	7.875	3	3.[illegible] lb	
		CR-3	Ni-Cd	24	25	5	13.125	10.2	5.5	35 lb	
		CR-1	Ni-Cd	4	4.7	5	2.06	2.25	4.06	1.5 lb	
		CR-2	Ni-Cd	6	2.5	5	4.938	2.312	4.188	3.5 lb	
		CS-2	Ni-Cd	13	4.0	5	9.609	3.797	1.5	3.5 lb	
		CH-1	Ni-Cd	24	22	5	17.05	8.5	7	65 lb	
		CH-2	Ni-Cd	24	4.0	5	10.75	5.25	2.531	9 lb	
		CS-1A	Ni-Cd	3.6	0.13	5	--	0.672 0	4.06	0.1 lb	
		CS-1B	Ni-Cd	7.2	0.17	5	--	0.672 0	2.156	0.3 lb	
		CS-3	Ni-Cd	7.2	1.4	5	5.109	1.828	0.9219	0.5 lb	
		MM-1	Ni-Cd	30	13	5	17	7.25	5.438	35 lb	
		MM-2	Ni-Cd	24	4	5	9	5.312	4.75	11 lb	

TABLE D-11. SUMMARY OF CHARACTERISTICS OF POWER SOURCES (BATTERIES/STORAGE CELLS) (continued)

Manufacturer	Make	Model	Type	Potential, v	Capacity, amp-hr	Rate, hr	Dimensions, in. Length	Width	Height	Weight	Application
Sonotone Corp.	--	MM-3	Ni-Cd	12	0.8	5	3.344	2.312	2.312	1.2 lb	Special purpose battery
		MM-4	Ni-Cd	28	4	5	7.875	4.312	4.031	9 lb	
		MM-5	Ni-Cd	28	13	5	12.25	11.06	5.25	35 lb	
		MM-6	Ni-Cd	28	0.25	5	5.5	3	3.5	3 lb	
		MM-7	Ni-Cd	14	4	5	7	4	4.5	4.5 lb	
		MM-8	Ni-Cd	14	4	5	5.562	4	4.5	4.5 lb	
		MM-9	Ni-Cd	12	0.8	5	7.562	2.5	4.438	5.5 lb	
		MM-10	Ni-Cd	30	4.5	5	24.25	6.5	6.188	63 lb	
		MM-11	Ni-Cd	37.5	13	5	14.125	8.125	5.375	40 lb	
		MM-12	Ni-Cd	28	6.5	5	12.81	6.656	4.375	15 lb	
		MM-13	Ni-Cd	35	100	5	29.75	10.125	15.25	450 lb	
		MM-14	Ni-Cd	6	250	5	21.59	9.781	10.38	130 lb	
		MM-16	Ni-Cd	28	2.5	5	9.438	2.5	4.25	7.5 lb	
		ME-1	Ni-Cd	28	2	5	7.125	3.875	4.50	7.25 lb	
		ME-2	Ni-Cd	24	0.8	5	4.875	4.5	2.75	3.5 lb	
		MS-1	Ni-Cd	3.6	0.51	5	2.781	1.219	1.219	0.3 lb	
		MS-2	Ni-Cd	8.2	0.51	5	4	2.781	1.203	1 lb	
		MS-3	Ni-Cd	24	1.2	5	7.062	3.047	1.938	2.5 lb	
		MS-4	Ni-Cd	3.6	3	5	3.016	2.031	1.891	0.13 lb	
		MS-5	Ni-Cd	30	1.9	5	7.406	4.875	4.375	5.75 lb	
Yardney	Silvercel	HR-01	--	--	0.1	--	0.22	0.63	1.38	0.15 oz	--
		HR-02	--	--	0.2	--	0.22	0.63	1.94	0.23 oz	--
		HR-05	--	--	0.5	--	0.54	1.08	1.56	0.8 oz	--
		HR-1	--	--	1	--	0.54	1.08	2.02	1.1 oz	--
		HR-1.5	--	--	1.5	--	0.54	1.08	2.32	1.4 oz	--
		HR-2	--	--	2	--	0.59	1.72	2.53	2.4 oz	--
		HR-3	--	--	3	--	0.59	1.72	2.86	3.2 oz	--
		HR-4	--	--	4	--	0.59	1.72	3.36	3.7 oz	--
		HR-5	--	--	5	--	0.79	2.08	2.91	4.6 oz	--
		HR-10	--	--	10	--	0.74	2.32	4.81	8.2 oz	--
		HR-15	--	--	15	--	0.8	2.31	4.94	10 oz	--
		HR-18	--	--	20	--	0.81	2.31	7	13.1 oz	--
		HR-20	--	--	20	--	2.05	1.73	4.28	14 oz	--

TABLE D-11. SUMMARY OF CHARACTERISTICS OF POWER SOURCES (BATTERIES/STORAGE CELLS) (continued)

Manufacturer	Make	Model	Type	Potential, v	Capacity, amp-hr	Rate, hr	Dimensions, in. Length	Width	Height	Weight	Application
Yardney	Silvercel	HR-21	--	--	20	--	0.8	2.3	7.53	15.5 oz	--
		HR-40	--	--	40	--	0.99	3.25	7.09	25 oz	--
		HR-58	--	--	60	--	1.27	3.25	7.25	31.8 oz	--
		HR-60	--	--	60	--	2.36	2.73	4.5	33 oz	--
		HR-70	--	--	70	--	1.41	3.64	6.25	40 oz	--
		HR-72	--	--	72	--	1.56	3.13	9.44	52 oz	--
		HR-80	--	--	80	--	1.75	2.81	8.5	48 oz	--
		HR-85	--	--	100	--	1.81	2.81	9.44	58 oz	--
		HR-90	--	--	90	--	2.16	3.26	7.06	54 oz	--
		HR-100	--	--	100	--	2.78	3.44	4.81	45 oz	--
		HR-115	--	--	115	--	2.26	3.25	7.31	61 oz	--
		HR-135	--	--	135	--	2.26	3.25	7.31	62 oz	--
		LR-05	--	--	0.5	--	0.54	1.08	1.56	0.8 oz	--
		LR-1	--	--	1	--	0.54	1.08	2.02	1.1 oz	--
		LR-2	--	--	2	--	0.59	1.72	2.53	2.3 oz	--
		LR-3	--	--	3	--	0.59	1.72	2.86	3 oz	--
		LR-4	--	--	4	--	0.59	1.72	3.36	3.6 oz	--
		LR-5	--	--	5	--	0.79	2.08	2.91	4.5 oz	--
		LR-10	--	--	10	--	0.74	2.32	4.81	8.2 oz	--
		LR-20	--	--	20	--	1.73	2.05	4.28	14 oz	--
		LR-21	--	--	20	--	0.8	2.3	7.53	15.5 oz	--
		LR-40	--	--	40	--	0.99	3.25	7.09	23 oz	--
		LR-60	--	--	60	--	2.36	2.73	4.5	29 oz	--
		LR-70	--	--	70	--	1.41	3.64	6.25	40 oz	--
		LR-85	--	--	100	--	1.81	2.81	9.44	62 oz	--
		LR-100	--	--	100	--	2.78	3.44	4.81	44 oz	--
		LR-200	--	--	200	--	1.31	5.87	11.3	102.5 oz	--
		LR-300	--	--	300	--	1.78	4.19	17.5	150 oz	--
	Silcad	Y5-01	--	--	0.1	--	0.22	0.63	1.38	0.18 oz	--
		Y5-05	--	--	0.5	--	0.54	1.08	1.55	0.75 oz	--
		YS-1	--	--	1	--	0.54	1.08	2.02	1.2 oz	--
		Y5-2	--	--	2	--	0.59	1.72	2.53	2.3 oz	--

TABLE D-11. SUMMARY OF CHARACTERISTICS OF POWER SOURCES (BATTERIES/STORAGE CELLS) (continued)

Manufacturer	Make	Model	Type	Potential, v	Capacity, amp-hr	Rate, hr	Dimensions, in. Length	Width	Height	Weight	Application
Yardney	Silcad	YS-3	--	--	3	--	0.59	1.72	2.86	3.2 oz	--
		YS-5	--	--	5	--	0.79	2.08	2.91	5 oz	--
		YS-10	--	--	10	--	0.74	2.32	4.81	9.2 oz	--
		YS-18	--	--	18	--	0.81	2.13	7	13 oz	--
		YS-20	--	--	20	--	2.05	1.73	4.28	15.1 oz	--
		YS-40	--	--	40	--	0.99	3.25	7.05	26.3 oz	--
		YS-60	--	--	60	--	2.36	2.73	4.5	42.5 oz	--
		YS-70	--	--	70	--	1.41	3.64	6.25	42 oz	--
		YS-100	--	--	100	--	3.44	2.78	4.81	53 oz	--
		YS-300	--	--	300	--	1.78	4.19	17.5	183 oz	--

TABLE D-12. SUMMARY OF CHARACTERISTICS OF DRIVE TRAINS (TRANSMISSIONS)[a]

Manufacturer	Make	Model	HP @ RPM	Gear Selection	Weight, lb	Lubrication	Gear Ratio	Description
Fairbanks Morse	--	14 850 001	12 @ 3600	Fwd, n, rev	24	Oil bath	--	Transmission
		14 890 001	5 @ 3600	Fwd, n, rev	4	--	Fwd 1:1; rev 2:1	Transmission
		14 890 002	5 @ 3600	Fwd, n, rev	4	--	Fwd 1:1; rev 2:1	Transmission
		14 890 003	5 @ 3600	Fwd, n, rev	4	--	Fwd 1:1; rev 2:1	Transmission
		14 850 004	5 @ 3600	Fwd, n, rev	4	--	Fwd 1:1; rev 2:1	Transmission
		14 850 076	39 @ 1200	--	30	Oil bath	1:1	Bevel gear drive
		14 850 051	30 @ 1200	--	28	Oil bath	1:1	Bevel gear drive
		14 850 026	3.5 @ 3600	--	15	--	27:1	Transfer case
		14 850 151	1.5 @ 3600	--	5	Permanent	18:1	Gear reducer
		14 850 101	10 @ 2400	2 fwd, 2 n, 1 rev	48	Oil bath	Fwd 17.9:1, 5.85:1; rev 29.8:1	2-speed transaxle transmission
		14 850 103	10 @ 2400	2 fwd, 2 n, 1 rev	48	Oil bath	Fwd 13.5:1, 5.85:1; rev 22.4:1	2-speed transaxle transmission
		14 850 104	10 @ 2400	2 fwd, 2 n, 1 rev	48	Oil bath	Fwd 17.9:1, 5.85:1; rev 29.8:1	2-speed transaxle transmission
Gravely	--	Gemini I	25 @ 3600	8 fwd, 1 rev	185	SAE 90	--	Transmission
		Gemini II	15 @ 3600	4 fwd, 4 rev	60	SAE 90W EP	Fwd 87.21:1, 58.14:1, 38.76:1, 25.84:1; rev 196.23:1, 130.82:1, 87.21:1, 58.14:1	Transmission
Tecumseh Products Co.	Peerless	Series 200	--	2 fwd	6	Permanent	0.840:1, 1.190:1	2-speed transmission
		Series 350	1900	3 fwd, 1 rev	14	EP Li grease	Fwd 6.2:1, 4.1:1, 3.0:1; rev 3.45:1	Transmission
		Series 400	1900	3 fwd, 1 rev	14	Oil bath	Fwd 6.2:1, 4.1:1, 3.0:1; rev 3.45:1	Transmission
		Series 600	1900	3 fwd, 1 rev	30	Oil bath	Fwd 26.6:1, 13.6:1, 9.1:1, rev 19.5:1	Transaxle
		Series 1200	3600	3 fwd, 1 rev	50	Oil bath	Fwd 58.5:1, 32.7:1, 22.2:1; rev 42.5:1	Transaxle
		Series 1300	3600	--	30	Oil bath	22.2:1 or 19.7:1	Hydrostatic gear reducer
		Series 1400	3600	3 fwd, 1 rev	50	Oil bath	Fwd 58.5:1, 32.7:1, 22.2:1; rev 42.5:1	Transaxle
		--	7 @ 3600	--	6	Permanent	1:1	Right angle drive

(a) Abbreviations used:

fwd = forward; rev = reverse; n = neutral.

TABLE D-13. SUMMARY OF CHARACTERISTICS OF DRIVE TRAINS (VARIABLE MOTOR DRIVES)

		Speed Ratios Available						
		2:1	3:1	4:1	5:1	6:1	Maximum 8:1	Maximum 10:1
Manufacturer	HP	Highest and Lowest Maximum Output Speed Available[a]						
Eaton, Yale & Towne Inc.	0.25	4660 to 20	4660 to 25	← 4660 to 30 →		4660 to 37	--	4660 to 68
	0.50	←	4660 to 30	→	← 4660 to 37 →		--	4660 to 68
	0.75	←	4660 to 37	→	4660 to 45	4660 to 56	--	4660 to 100
	1	←		3750 to 1.2	→		3940 to 1.6	--
	1.50	←		3600 to 1.2	→		3600 to 1.6	--
	2	←		3600 to 1.5	→		3600 to 1.6	--
	3	←		3600 to 2.2	→		3600 to 2.4	--
	5	←		3220 to 3.3	→			--
	7.50	←		3220 to 5	→			--
	10	←		3220 to 7.5	→			--
	15	←		3220 to 11	→		--	--
	20	←	2630 to 13.5	→	--	--	--	--
	25	←	2630 to 16.5	→	--	--	--	--
	30	←		2150 to 30	→	--	--	--
	40	←		2150 to 30	→	--	--	--

(a) For minimum speeds available, divide maximum speeds by speed ratio.

TABLE D-14. SUMMARY OF CHARACTERISTICS OF DRIVE TRAINS (TORQUE CONVERTERS)

Manufacturer	Model	Maximum HP 4-Cycle (3600 RPM)	Maximum HP 2-Cycle (5500 RPM)	Drive Ratio High	Drive Ratio Low	Sheave Diameter, in. Drive	Sheave Diameter, in. Driven	Sheave Weight, lb Drive	Sheave Weight, lb Driven	Engagement Speed, rpm 4-Cycle (3600 RPM)	Engagement Speed, rpm 2-Cycle (5500 RPM)	Operating Speed, rpm
Salsbury Corp.	330	5	8	1:1	2.5:1	4-1/2	6	2-1/2	1-3/4	2000	3100	8500
	500	7	9	1:1	3:1	5-1/2	7-3/8	4-3/4	6-1/4	1350	1900	5500
	600	12	--	1:1	3:1	7-1/8	8-1/2	11-1/3	7-1/4	1400	--	4000
	700	8	15	1:1	4:1	7-7/32	9-7/8	5-1/2	9-1/4	1400	1900	5500
	705	10	17	1:1	4:1	7-1/4	9-7/8	5-1/2	10-3/4	1400	1900	6000
	770	10	17	1:1	3:1	7-7/32	9-7/8	5-1/2	9-1/4	1400	1900	5500
	775	12	19	1:1	3:1	7-7/32	9-7/8	5-1/2	10-3/4	1400	1900	5500
	780	12	25	1:1.16	3.76:1	7-7/32	9-1/4	5-1/4	8	1600	2300	5500
	790	10	19	1:1.5	3:1	7-7/32	8-1/2	5-1/2	8	1400	1900	5500
	795	12	25	1:1.5	3:1	7-7/32	8-1/2	5-1/2	10-3/4	1400	1900	5500
	880	--	25	1:13	3.2:1	8-3/8	9-7/8	10-1/2	9-1/2	--	2000	5500
	910	18	32	1:1.28	3.14:1	7-3/4	9-7/8	7-1/2	8	--	2800	5500
	1190	24	50	1:1.27	2.88:1	8-5/16	9-7/8	11	9-1/4	1500	2800	5500
	1195	24	50	1:1.27	2.88:1	8-5/16	9-7/8	11	11-3/4	1500	2800	5500

TABLE D-15. SUMMARY OF CHARACTERISTICS OF GUIDANCE AND CONTROL SYSTEMS (TRANSMITTERS)

Manufacturer	Model	Frequency, MHz	Range, miles	Signal Type	Power Supply Type	Power Supply Life, hr	Power Input	Power Output	Size, in.	Weight	Descripti
Conic Corp.	CTM-UHF-10V	2200-2300 (S), 1710-1850 (low S), 1435-1540 (L)	--	FM	--	--	112 w	10 w	5.62 x 4.62 x 1.4	35 oz	FM video trans
Hydro Products	ST206	26.95, 27.045, 27.095, 27.145, and 27.195	10	AM 27-MHz carrier	VS 300 battery	10	100 Mw	--	1.5 D x 10.75	1.5 lb	Submersible
	ST206-20	26.95, 27.045, 27.095, 27.145, and 27.195	10	AM 27-MHz carrier	1 alkaline C battery	20	100 Mw	--	1.5 D x 11.25	1.6 lb	Submersible
	ST206-100	26.95, 27.045, 27.095, 27.145, and 27.195	10	AM 27-MHz carrier	4 alkaline C batteries	100	100 Mw	--	1.5 D x 16.75	2.44 lb	Submersible

TABLE D-16. SUMMARY OF CHARACTERISTICS OF GUIDANCE AND CONTROL SYSTEMS (RATE GYROS AND SWITCHES)[a]

Manufacturer	Model	Range	Natural Frequency, cps	Pick-Off Type	Pick-Off Excitation	Motor Power
			Rate Gyros			
American Gyro	5H025-1	0.25 rad	60	Microsyn	12 v, 900 cy, 1φ	--
	5H01.5-1	1.5 rad	--	Microsyn	12 v, 900 cy, 1φ	--
	R29A10-1	10°/sec	--	Microsyn	26 v, 400 cy, 1φ	115 v, 400 cy, 3φ
	R27A12-2	12°/sec	--	Microsyn	--	115 v, 400 cy, 3φ
	14860	12°/sec	--	--	--	--
	R21A20-1	20°/sec	--	Microsyn	--	115 v, 400 cy, 3φ
	S20A	20°/sec	--	--	115 v, 400 cy, 1φ	115 v, 400 cy, 3φ
	A30	30°/sec	--	Var. rel.	115 v, 400 cy, 1φ	26 v, 400 cy, 3φ
	R21A30-1	30°/sec	--	Microsyn	--	115 v, 400 cy, 3φ
	R29A60-1	60°/sec	--	Microsyn	26 v, 400 cy, 1φ	115 v, 400 cy, 3φ
	R59B90-2	90°/sec	25	5K pot.	35 v	--
	A150	150°/sec	--	Var. rel.	115 v, 400 cy, 1φ	26 v, 400 cy, 3φ
	SB150	150°/sec	30	6K pot.	--	115 v, 400 cy, 3φ
	R21A300-1	300°/sec	--	Microsyn	--	115 v, 400 cy, 3φ
	SH10-1	577°/sec	35	Microsyn	12 v, 900 cy, 1φ	--
	R59B720-1	720°/sec	50	5K pot.	35 v	--
Daystrom Gyro	R27512-2	12°/sec	--	Microsyn	--	115 v, 400 cy, 3φ
Giannini	36628ZMSN-18-1.25	12.5°/sec	--	AC ind.	26 v, 800 cy, 1φ	26 v, 800 cy, 1φ
	36628AM-12-4	40°/sec	--	AC ind.	26 v, 400 cy, 1φ	200 v, 400 cy, 3φ
	36628AM-14-4	40°/sec	--	Var. rel.	115 v, 400 cy, 1φ	200 v, 400 cy, 3φ
	36129M-6M-15	150°/sec	--	6K pot.	--	200 v, 400 cy, 3φ
	36128L-6-40	400°/sec	--	4K pot.	--	115 v, 400 cy, 3φ
	36128VN-5-1D	100°/sec	--	5K pot.	--	26 v DC
Gyro Dynamics	101A	20°/sec	--	AC ind.	28 v, 400 cy, 1φ	115 v, 400 cy, 3φ
Gyromechanism	RG222	6°/sec	--	--	--	--
	RG224	6°/sec	--	AC ind.	--	--
	RG223	12°/sec	--	--	--	--
Lear	977r	[illegible]/sec	16	AC ind.	30 v, 400 cy, 1φ	115 v, 400 cy, 3φ

TABLE D-16. SUMMARY OF CHARACTERISTICS OF GUIDANCE AND CONTROL SYSTEMS (RATE GYROS AND SWITCHES)[a] (continued)

Manufacturer	Model	Range	Natural Frequency, cps	Pick-Off Type	Pick-Off Excitation	Motor Power
Minn. Honeywell	JRT106	6°/sec	25	--	26 v, 400 cy	115 v, 400 cy, 3ϕ
	JRT116	10°/sec	--	--	26 v, 400 cy	115 v, 400 cy, 3ϕ
	JRT117	10°/sec	17	--	26 v, 400 cy	115 v, 400 cy, 3ϕ
	JRS125A2	10°/sec	12-18	--	26 v, 400 cy	115 v, 400 cy, 3ϕ
	JRS101A2	12°/sec	25	--	26 v, 400 cy, 3ϕ	115 v, 400 cy, 3ϕ
	JRT38	12°/sec	--	--	--	--
	JRT109	12°/sec	25	--	26 v, 400 cy	115 v, 400 cy, 3ϕ
	JRT114	12°/sec	25	--	26 v, 400 cy	115 v, 400 cy, 1ϕ
	JR21	100°/sec	32-38	--	25 v, 400 cy	30 v, 400 cy, 3ϕ
Whittaker	R170-512675	0.5 rad	35	Microsyn	--	200 v, 400 cy, 3ϕ
	R170-513825	10 rad	81	Microsyn	--	200 v, 400 cy, 3ϕ
			Rate Switches			
Airesearch	RG210-14-1	22.5°/sec	--	--	--	26-30 v DC
Daystrom	RS22NO-1	22.5°/sec	--	--	--	28 v DC
Gyro Dynamics	5S-2	0.5°/sec	--	--	--	28 v DC
	15S-2	22.5°/sec	--	--	--	28 v DC
Summers	351A	0.5°/sec	2.5	--	--	--

(a) Abbreviations used:

cy = cycle
ind. = inductive
var. rel. = variable reluctance
pot. = potentiometer.

TABLE D-17. SUMMARY OF CHARACTERISTICS OF GUIDANCE AND CONTROL SYSTEMS (DC TO AC CONVERTERS) (continued)

Manufacturer	Model	DC Input Volts	DC Input Amps	AC Output (115 v, 60 cycles), w	Description	Size, in.	Weight, lb
Carter	E1040C8	24	3.5	40	Super converter	8-1/4 x 4-1/2 x 5	13
	E1060C8	24	4.3	60	Super converter	8-1/4 x 4-1/2 x 5	13
	E1080C8	24	6	80	Super converter	8-1/4 x 4-1/2 x 5	13
	E1010CB	24	8.3	100	Super converter	8-1/4 x 4-1/2 x 5	13
	E1015CB	24	10	150	Super converter	8-1/4 x 4-1/2 x 5	13
	E1025CP	24	18	250	Custom converter	11-5/8 x 6-11/16 x 7-1/4	--
	E1030CP	24	22	300	Custom converter	11-5/8 x 6-11/16 x 7-1/4	38
	E1040CP	24	28	400	Custom converter	12-5/8 x 6-11/16 x 7-1/4	47
	E1050CP	24	33	500	Custom converter	12-5/8 x 6-11/16 x 7-1/4	47
	E1075CP	24	44	750	Custom converter	13-7/8 x 6-11/16 x 7-1/4	58
	J1040C8	28	3	40	Super converter	8-1/4 x 4-1/2 x 5	13
	J1060CB	28	4	60	Super converter	8-1/4 x 4-1/2 x 5	13
	J1080C8	28	5.2	80	Super converter	8-1/4 x 4-1/2 x 5	13
	J1010C8	28	7	100	Super converter	8-1/4 x 4-1/2 x 5	13
	J1015C8	28	9	150	Super converter	8-1/4 x 4-1/2 x 5	13
	J1021CP	28	14	210	Custom converter	11-5/8 x 6-11/16 x 7-1/4	--
	J1025CP	28	19	250	Custom converter	11-5/8 x 6-11/16 x 7-1/4	--
	J1030CP	28	20	300	Custom converter	11-5/8 x 6-11/16 x 7-1/4	38
	J1040CP	28	24	400	Custom converter	12-5/8 x 6-11/16 x 7-1/4	47
	J1050CP	28	28	500	Custom converter	12-5/8 x 6-11/16 x 7-1/4	47
	J1075CP	28	38	750	Custom converter	13-7/8 x 6-11/16 x 7-1/4	58
	C1040C8	32	3	40	Super converter	8-1/4 x 4-1/2 x 5	13
	C1060CB	32	4	60	Super converter	8-1/4 x 4-1/2 x 5	13
	C1080CB	32	5	80	Super converter	8-1/4 x 4-1/2 x 5	13
	C1010CB	32	5.5	100	Super converter	8-1/4 x 4-1/2 x 5	13
	C1015CB	32	7.4	150	Super converter	8-1/4 x 4-1/2 x 5	13
	C1025CP	32	15	250	Custom converter	11-5/8 x 6-11/16 x 7-1/4	--
	C1030CP	32	19	300	Custom converter	11-5/8 x 6-11/16 x 7-1/4	38
	C1040CP	32	21	400	Custom converter	12-5/8 x 6-11/16 x 7-1/4	47
	C1050CP	32	25	500	Custom converter	12-5/8 x 6-11/16 x 7-1/4	47
	C1075CP	32	32	750	Custom converter	13-7/8 x 6-11/16 x 7-1/4	58

TABLE D-17. SUMMARY OF CHARACTERISTICS OF GUIDANCE AND CONTROL SYSTEMS (DC TO AC CONVERTERS)

Manufacturer	Model	DC Input Volts	DC Input Amps	AC Output (115 v. 60 cycles), w	Description	Size, in.	Weight, lb
Carter	1020LB	12	4	20	Geneverter	7-3/8 x 4-3/4 x 3-1/8	10-1/4
	1040LB	12	6	40	Geneverter	7-3/8 x 4-3/4 x 3-1/8	10-1/4
	1060LB	12	8.6	60	Geneverter	7-3/8 x 4-3/4 x 3-1/8	10-1/4
	1020LE	24	2	20	Geneverter	7-3/8 x 4-3/4 x 3-1/8	10-1/4
	1040LE	24	3	40	Geneverter	7-3/8 x 4-3/4 x 3-1/8	10-1/4
	1060LE	24	4.3	60	Geneverter	7-3/8 x 4-3/4 x 3-1/8	10-1/4
	1020LC	32	1.5	20	Geneverter	7-3/8 x 4-3/4 x 3-1/8	10-1/4
	1040LC	32	2.3	40	Geneverter	7-3/8 x 4-3/4 x 3-1/8	10-1/4
	1060LC	32	3.2	60	Geneverter	7-3/8 x 4-3/4 x 3-1/8	10-1/4
	1020LW	48	1.2	20	Geneverter	7-3/8 x 4-3/4 x 3-1/8	10-1/4
	1040LW	48	1.5	40	Geneverter	7-3/8 x 4-3/4 x 3-1/8	10-1/4
	1060LW	48	2	60	Geneverter	7-3/8 x 4-3/4 x 3-1/8	10-1/4
	1020LD	115	0.4	20	Geneverter	7-3/8 x 4-3/4 x 3-1/8	10-1/4
	1040LD	115	0.6	40	Geneverter	7-3/8 x 4-3/4 x 3-1/8	10-1/4
	1060LD	115	0.85	60	Geneverter	7-3/8 x 4-3/4 x 3-1/8	10-1/4
	A104 CB	6	15	40	Super converter	8-1/4 x 4-1/2 x 5	13
	A1060CB	6	19	60	Super converter	8-1/4 x 4-1/2 x 5	13
	A1080CB	6	25	80	Super converter	8-1/4 x 4-1/2 x 5	13
	A1010CB	6	27	100	Super converter	8-1/4 x 4-1/2 x 5	13
	A1015CB	6	46	150	Super converter	8-1/4 x 4-1/2 x 5	13
	B1040CB	12	8	40	Super converter	8-1/4 x 4-1/2 x 5	13
	B1060CB	12	10	60	Super converter	8-1/4 x 4-1/2 x 5	13
	B1080CB	12	14	80	Super converter	8-1/4 x 4-1/2 x 5	13
	B1010CB	12	15	100	Super converter	8-1/4 x 4-1/2 x 5	13
	B1015CB	12	23	150	Super converter	8-1/4 x 4-1/2 x 5	13
	B1021CP	12	29	210	Custom converter	11-5/8 x 6-11/16 x 7-1/4	--
	B1025CP	12	35	250	Custom converter	11-5/8 x 6-11/16 x 7-1/4	--
	B1030CP	12	45	300	Custom converter	11-5/8 x 6-11/16 x 7-1/4	38
	BS1040CP	12	56	400	Custom converter	12-5/8 x 6-11/16 x 7-1/4	47

TABLE 0-17. SUMMARY OF CHARACTERISTICS OF GUIDANCE AND CONTROL SYSTEMS (DC TO AC CONVERTERS) (continued)

Manufacturer	Model	DC Input Volts	DC Input Amp	AC Output (115 v, 60 cycles), w	Description	Size, in.	Weight, lb
Carter	W1040CB	48	2	40	Super converter	8-1/4 x 4-1/2 x 5	13
	W1060CB	48	2.7	60	Super converter	8-1/4 x 4-1/2 x 5	13
	W1080CB	48	3.5	80	Super converter	8-1/4 x 4-1/2 x 5	13
	W1010CB	48	4.2	100	Super converter	8-1/4 x 4-1/2 x 5	13
	W1015CB	48	5.8	150	Super converter	8-1/4 x 4-1/2 x 5	13
	W1025CP	48	9	250	Custom converter	11-5/8 x 6-11/16 x 7-1/4	--
	W1030CP	48	10	300	Custom converter	11-5/8 x 6-11/16 x 7-1/4	38
	W1040CP	48	13	400	Custom converter	12-5/8 x 6-11/16 x 7-1/4	47
	W1050CP	48	16	500	Custom converter	12-5/8 x 6-11/16 x 7-1/4	47
	W1075CP	48	22	750	Custom converter	13-7/8 x 6-11/16 x 7-1/4	58
	H1040CB	64	1.5	40	Super converter	8-1/4 x 4-1/2 x 5	13
	H1060CB	64	2	60	Super converter	8-1/4 x 4-1/2 x 5	13
	H1080CB	64	2.2	80	Super converter	8-1/4 x 4-1/2 x 5	13
	H1010CB	64	2.5	100	Super converter	8-1/4 x 4-1/2 x 5	13
	H1015CB	64	3.4	150	Super converter	8-1/4 x 4-1/2 x 5	13
	H1025CP	64	7.8	250	Custom converter	11-5/8 x 6-11/16 x 7-1/4	--
	H1030CP	64	8.2	300	Custom converter	11-5/8 x 6-11/16 x 7-1/4	38
	H1040CP	64	10	400	Custom converter	12-5/8 x 6-11/16 x 7-1/4	47
	H1050CP	64	12.5	500	Custom converter	12-5/8 x 6-11/16 x 7-1/4	47
	H1075CP	64	16	750	Custom converter	13-7/8 x 6-11/16 x 7-1/4	58
	D1040CB	115	0.7	40	Super converter	8-1/4 x 4-1/2 x 5	13
	D1060CB	115	1	60	Super converter	8-1/4 x 4-1/2 x 5	13
	D1080CB	115	1.1	80	Super converter	8-1/4 x 4-1/2 x 5	13
	D1010CB	115	1.7	100	Super converter	8-1/4 x 4-1/2 x 5	13
	D1015CB	115	2	150	Super converter	8-1/4 x 4-1/2 x 5	13
	D1021CP	115	2.5	210	Custom converter	11-5/8 x 6-11/16 x 7-1/4	--
	D1025CP	115	3.5	250	Custom converter	11-5/8 x 6-11/16 x 7-1/4	--
	D1030CP	115	4.6	300	Custom converter	11-5/8 x 6-11/16 x 7-1/4	38
	D1040CP	115	5.6	400	Custom converter	12-5/8 x 6-11/16 x 7-1/4	47
	D1050CP	115	7	500	Custom converter	12-5/8 x 6-11/16 x 7-1/4	47
	D1075CP	115	8.8	750	Custom converter	13-7/8 x 6-11/16 x 7-1/4	58
	K1040CBA	230	0.4	40	Super converter	8-1/4 x 4-1/2 x 5	13

TABLE D-17. SUMMARY OF CHARACTERISTICS OF GUIDANCE AND CONTROL SYSTEMS (DC TO AC CONVERTERS) (continued)

Manufacturer	Model	DC Input Volts	DC Input Amps	AC Output (115 V, 60 cycles), W	Description	Size, in.	Weight, lb
Carter	K1060CBA	230	0.5	60	Super converter	8-1/4 x 4-1/2 x 5	13
	K1080CBA	230	0.6	80	Super converter	8-1/4 x 4-1/2 x 5	13
	K1010CBA	230	1	100	Super converter	8-1/4 x 4-1/2 x 5	13
	K1015CBA	230	1.2	150	Super converter	8-1/4 x 4-1/2 x 5	13
	K1025CP	230	1.8	250	Custom converter	11-5/8 x 6-11/16 x 7-1/4	--
	K1030CP	230	2.3	300	Custom converter	11-5/8 x 6-11/16 x 7-1/4	38
	K1040CP	230	2.8	400	Custom converter	12-5/8 x 6-11/16 x 7-1/4	47
	K1050CP	230	3.5	500	Custom converter	12-5/8 x 6-11/16 x 7-1/4	47
	K1075CP	230	4.4	750	Custom converter	13-7/8 x 6-11/16 x 7-1/4	58
	ESX1020C5P	23/26	14	200	Industrial converter	12-5/8 x 6-11/16 x 7-1/4	47
	CSX1020C5P	33/37	9	200	Industrial converter	12-5/8 x 6-11/16 x 7-1/4	47
	WSX1020C5P	45/50	7.5	200	Industrial converter	12-5/8 x 6-11/16 x 7-1/4	47
	HSX1020C5P	67/74	5	200	Industrial converter	12-5/8 x 6-11/16 x 7-1/4	47
	DSX1020C5P	118/132	2.6	200	Industrial converter	12-5/8 x 6-11/16 x 7-1/4	47
	KSX1020C5P	236/264	1.3	200	Industrial converter	12-5/8 x 6-11/16 x 7-1/4	47

TABLE 0-18. SUMMARY OF CHARACTERISTICS OF GUIDANCE AND CONTROL SYSTEMS (VARIABLE SPEED CONTROLS)

Manufacturer	Model	Basic RPM	Speed Range, rpm	Continuous Torque, in.-oz	DC Voltage	Geared	Dimensions, in. Body Diameter	Body Length	Shaft Diameter	Shaft Length
Globe	25A540	10000	1200-12000	0.5	12	No	1.167	1.750	0.125	0.375
Delco	5074368	12000	1300-13500	0.6	12	No	1" sq.	2.0	0.125	0.500
CPPC	DC8-AS92	23000	3000-27000	0.35	24	No	0.750	1.375	0.125	0.407
Delco	5067125	10000	1000-10000	0.5	24	No	1" sq.	2.0	---	0.500
Globe	C3A541	17500	2000-23000	0.6	24	No	1.167	1.750	0.125	0.500
	C3A683	13000	1600-16000	0.6	24	No	1.187	1.750	--	0.375
	A9A608	16500	3000-18000	0.6	24	No	1.250	1.875	0.125	0.500
	5A1419	18	6-19	90	12	Yes	1.250	2.53[illegible]	0.312	0.593
	43A1043	51	8-65	10	12	Yes	0.890	2.406	0.187	0.437
	43A1028	60	40-125	5	12	Yes	0.875	3.250	0.187	0.250
	5A1269	0.25	0.125-0.55	1000	24	Yes	1.250	3.406	0.312	0.500
	5A569-7	1	0.125-1.6	800	24	Yes	1.250	3.312	0.312	0.500
American	3602-1	2	0.5-2.5	500	24	Yes	1.187	2.812	0.250	0.500
	3255P	4	0.5-5.5	300	[illegible]	Yes	1.187	3.312	0.312	0.500
Globe	C5A1106	4	0.5-5.5	300	24	Yes	1.187	3.312	0.312	0.500
American	3255M	7	1.0-10.0	250	24	Yes	1.187	3.312	0.312	0.500
Globe	5A1452	7	1.5-11.5	250	24	Yes	1.250	3.187	0.312	0.500
	5A1036	16	4.0-25	175	24	Yes	1.250	2.828	0.312	0.500
	5A1194	17	4.0-28	150	24	Yes	1.250	2.828	0.312	0.500
	[illegible]	18	7-36	100	24	Yes	1.250	3.312	0.187	0.500
	[illegible]	25	5.0-42	100	24	Yes	1.250	3.828	0.250	0.500
	5A1170	35	5.0-45	100	24	Yes	1.250	2.828	0.312	0.750
Barb. Cole.	FL1M73512-1	43	10-60	50	24	Yes	1.250	4.375	0.250	0.500
Globe	[illegible]	45	15-85	25	24	Yes	1.187	3.187	0.187	0.375
	C5A1052	45	10-75	40	24	Yes	1.187	3.187	0.187	0.218
	25A715	50	16-78	50	24	Yes	1.250	2.875	0.250	0.812
	C5A1054	54	15-75	75	24	Yes	1.250	3.656	0.312	0.500
	5A1238	60	16-32	100	24	Yes	1.250	4.500	0.312	0.500
	5A123T	70	20-100	100	24	Yes	1.250	3.343	0.312	0.500
	[illegible]	75	20-105	25	24	Yes	1.250	3.187	0.187	0.312

TABLE D-18. SUMMARY OF CHARACTERISTICS OF GUIDANCE AND CONTROL SYSTEMS (VARIABLE SPEED CONTROLS) (continued)

Manufacturer	Model	Basic RPM	Speed Range, rpm	Continuous Torque, in.-oz	DC Voltage	Geared	Dimensions, in. Body Diameter	Body Length	Shaft Diameter	Shaft Length
Rowe	5105X300	100	30-125	10	24	Yes	1.125	2.0	0.125	0.250
Globe	5A1290	100	32-145	50	24	Yes	1.187	2.250	0.312	0.500
	29A636	135	30-170	50	24	Yes	1.250	2.828	0.250	0.500
Oster	13R9102-05	150	24-150	25	24	Yes	1.250	3.500	0.187	0.375
Globe	5A1267	160	140-625	25	24	Yes	1.250	3.500	0.250	0.750
	43A144-1	160	20-170	15	24	Yes	0.875	2.953	0.312	0.500
Delco	5067127	250	60-360	10	24	Yes	1.375	2.875	0.250	0.375
	5069600	250	60-325	10	24	Yes	1.375	2.875	0.250	0.375
Wstrn. Gear	P5B2AR3	250	60-450	20	24	Yes	1.250	3.0	0.312	0.375
Globe	C3A741	275	80-750	25	24	Yes	1.250	3.500	0.312	0.500
	A9A621	350	45-475	10	24	Yes	1.250	3.0	0.187	1.500
	A9A193	350	120-500	10	24	Yes	1.062	2.547	0.187	0.375
	B3A701	400	100-425	10	24	Yes	1.250	3.375	0.250	0.312
	C6A982	450	140-550	7.5	24	Yes	1.250	3.0	0.187	0.375
	C3A853	525	160-800	6	24	Yes	1.250	3.0	0.187	0.375
	B3A742	525	160-800	6	24	Yes	1.250	3.0	0.187	0.375
	C5A1067	650	200-1100	5	24	Yes	1.250	3.500	0.312	0.500
	29A731	850	250-1200	10	24	Yes	1.250	3.234	0.187	1.500
	5A1335	1000	350-1450	7.5	24	Yes	1.250	3.250	0.250	1.125
	5A2158	1185	475-1600	6	24	Yes	1.250	3.500	0.250	1.750
	43A491	1900	300-2000	2	24	Yes	0.875	2.250	0.187	0.250

TABLE D-19. SUMMARY OF CHARACTERISTICS OF GUIDANCE AND CONTROL SYSTEMS (POTENTIOMETERS)

Manufacturer	Model	Resistance, ohms	Linearity, percent	Dimensions, in. Diameter/ Width	Height/ Thickness	Length	Linear Travel, in.
Aeropot	AP 20C	812/6K	--	2 D	--	--	--
Anton	K300BV	20K	0.1	3 D	--	--	--
Borg.	80961	2.4K	--	11/16 D	--	7-1/4	3.5
	80999	3KCT	--	11/16 D	--	5-1/8	2.5
Bourns	156105	10K/10K	0.1	11/16	1-1/16	3	1.7
	2001083001	2.5K	0.5	7/8	11/16	6-3/8	4.4
	2001083604	5K	0.5	11/16	3/4	6	3
Computer Instr.	105	25K	--	1-1/8 D	--	--	--
	205	1K	--	2 D	--	--	--
De Jur	HP 502	11.4K/11.4K	--	5 D	--	--	--
	HP 504	3x4.7K/11.4K	--	5 D	--	--	--
Duncan	1800-640	4x300K/3.2K/50K	--	3 D	--	--	--
	1800-648	100K/10K	4/0.6	3 D	--	--	--
Edcliff	3-24-2	25KCT	0.5	1-1/4 D	--	4-3/4	1.875
	3-40	25KCT	0.5	7/8 D	--	4-3/4	1.875
	A-8002925	2'	0.75	11/16	3/4	4-9/32	1.328
Fairchild	741	10K/2K/10K	1/0.5/1	1-1/8 D	--	--	--
	746	60K	2	1-5/8 D	--	--	--
	747F	17.5K/17.5K	--	2 D	--	--	--
Gen. Controls	RPM123	10K	0.2	1-5/16 D	--	--	--
Giannini	1062S130	5K/5K	0.3	1-1/16 D	--	--	--
	1062S133	5K/5K	0.1	2 D	--	--	--
Helipot	5602	10K	0.15	2 D	--	--	--
	5617-409	16K	0.5	2 D	--	--	--
	5711	500	0.5	3 D	--	--	--
	5713-251-0	2K/2K	0.3	3 D	--	--	--
	5713-457-1	100K/10K	4/0.6	3 D	--	--	--
	5713-548	5K/50K/50K	0.1	3 D	--	--	--
	G	100	0.5	1-5/16	--	--	--
	G	500	0.5	1-5/16	--	--	--
	G	20K	0.5	1-5/16	--	--	--
	SG2858	5K	0.5	1-5/16	--	--	--
	SG471	500	0.5	1-5/16	--	--	--

TABLE D-19. SUMMARY OF CHARACTERISTICS OF GUIDANCE AND CONTROL SYSTEMS (POTENTIOMETERS) (continued)

Manufacturer	Model	Resistance, ohms	Linearity, percent	Dimensions, in. Diameter/ Width	Height/ Thickness	Length	Linear Travel, in.
Helipot	SG491	1K	0.5	1-5/16	--	--	--
	SG776	1K	0.5	1-5/16	--	--	--
	SG966	30	0.1	1-5/16	--	--	--
	SJ36	100/30K/10K	0.25/0.5/0.15	2 D	--	--	--
	SJ97	20K	0.15	2 D	--	--	--
	SJ343	5K	0.5	2 D	--	--	--
	SJ474D	5K	0.2	2 D	--	--	--
	SJ500	200/10K/10K	25/0.15/0.25	2 D	--	--	--
	SL142	10K	0.2	3 D	--	--	--
	SL143	10K/10K	0.2/0.2	3 D	--	--	--
	SL454B	10K/10K/50K	--	1-7/8 D	--	--	--
Humphrey	RP01-0109-1	10K/10K	5	3/4 D	--	7-1/2	2.5
	RP04-0101-1	30K	0.2	5/8 D	--	7-5/8	4.13
IRC	7501-5465A	50K	0.1	3/4 D	--	--	--
Markite	CT2239298	50K	0.8	5/8	15/16	3	1-1/4
Spectrol	100	50	0.2	1.312 D	--	--	--
	100-357	30KCT	0.5	1-5/16 D	--	--	--
	100-8016	100/100	0.1	1-5/16 D	--	--	--
	130-12	100	0.3	1.312 D	--	--	--
	130-45	2K	0.5	1-5/16 D	--	--	--
	130-54	500	0.5	1-1/4 D	--	--	--
	150	50K	--	1/2 D	--	--	--
	200-15	3.8K	4	1-3/4 D	--	--	--
	200-262	2.5K	1	1-3/4 D	--	--	--
	300-119	500/500	0.3/0.3	2 D	--	--	--
	400-612	20K	0.05	3 D	--	--	--
	700	500	0.5	7/8 D	--	--	--
	700	2.5K	0.5	0.875 D	--	--	--
Spirotech	171-108	20K	0.15	1-3/4 D	--	--	--
Tech. Instru. Corp.	RVTS S129C	50K/50KCT	0.5	1-1/4	1-1/4	3-3/4	2.625
TIC	RV1-313-1	50K	--	1-1/16 D	--	--	--
	RV7/8-S399	10K/10K	0.5	7/8 D	--	--	--
Topp Industries	LB140	2K	--	3/4	1/2	2-5/8	1.375

TABLE D-19. SUMMARY OF CHARACTERISTICS OF GUIDANCE AND CONTROL SYSTEMS (POTENTIOMETERS) (continued)

Manufacturer	Model	Resistance, ohms	Linearity, percent	Dimensions, in. Diameter/ Width	Height/ Thickness	Length	Linear Travel, in.
Waters	AP 1-1/16	2K	--	1-3/16 D	--	--	--
	AP 1-1/8	25K/25K	2	1-7/32 D	--	--	--
	AP 1-1/8	100K	2	1-7/32 D	--	--	--
	RT 7/8	50K	2	1-1/16 D	--	--	--

TABLE 0-20. SUMMARY OF CHARACTERISTICS OF GUIDANCE AND CONTROL SYSTEMS (DC MOTORS)

Manufacturer	Model	Voltage	No Load Current, ma	No Load Speed, rpm	Governed Torque, oz-in.	Governed Voltage	Governed Speed, rpm	Full Load or Rated Torque, oz-in.	Full Load or Rated Current, ma	Full Load or Rated Speed, rpm	Minimum Starting Torque, oz-in.	Rotation	Type
Kroker Eng. & Dev. Co.	SeaWasp 6	8	--	--	--	--	--	--	15000	20000	--	--	--
	SeaWasp 12	16	--	--	--	--	--	--	15000	20000	--	--	--
Pittman	Boatmaster 10005	8	630	4500	--	--	--	--	3500	2550	--	--	--
		10	650	5600	--	--	--	--	3500	3900	--	--	--
		12	800	6700	--	--	--	--	3500	5000	--	--	--
Barber Colman	BYQM 2020	12	40	--	0.07-0.2	10-14	2400	--	--	--	0.45	CW	Governed
	BYQM 2022	6	80	--	0.03-0.2	5.4-6.6	2400	--	--	--	0.5	CW	Governed
	BYQM 2100	12	70	--	0.07-0.2	9-13	1200	--	--	--	0.45	CW	Governed
	BYQM 2109	6	80	--	0.03-0.2	5.4-6.6	1200	--	--	--	0.5	CW	Governed
	BYQM 2184	6	80	5000	--	--	--	0.24	250	4150	1.1	Reversible	Ungoverned
	BYQM 2185	12	60	5400	--	--	--	0.3	160	4350	1.1	Reversible	Ungoverned
	BYQM 2675	24	30	5200	--	--	--	0.5	110	3800	1.2	Reversible	Ungoverned
	BYQM 2679	6	--	21	--	--	--	40	--	18	--	Reversible	Ungoverned
	BYQM 2764	12	--	23	--	--	--	54.4	--	18	--	--	Ungoverned
	BYQM 2962	12	--	56	--	--	--	16	--	47	--	--	Ungoverned
	BYQM 2968	12	--	550	--	--	--	2.4	--	445	--	--	Ungoverned
	BYQM 3015	6	--	52	--	--	--	16	--	43	--	--	Ungoverned
	BYQM 3064	12	--	1740	--	--	--	0.8	--	1400	--	--	Ungoverned
	BYQM 3120	6	--	1615	--	--	--	0.7	--	1340	--	--	Ungoverned
	BYQM 3121	6	--	510	--	--	--	1.9	--	424	--	--	Ungoverned
	BYQM 3122	6	--	163	--	--	--	5.4	--	136	--	--	Ungoverned
	BYQM 3123	12	--	177	--	--	--	6.7	--	142	--	--	Ungoverned
	BYQM 3124	6	--	17	--	--	--	16	--	15	--	--	Ungoverned
	BYQM 3125	12	--	16	--	--	--	16	--	17	--	--	Ungoverned
	BYQM 3126	6	--	5	--	--	--	16	--	5	--	--	Ungoverned
	BYQM 3127	12	--	6	--	--	--	16	--	6	--	--	Ungoverned
	BYQM 3128	6	--	1.7	--	--	--	16	--	1.7	--	--	Ungoverned
	BYQM 3129	12	--	1.8	--	--	--	16	--	1.8	--	--	Ungoverned
	BYQM 3130	6	--	0.5	--	--	--	16	--	0.5	--	--	Ungoverned
	BYQM 3131	12	--	0.6	--	--	--	16	--	0.6	--	--	Ungoverned

TABLE D-20. SUMMARY OF CHARACTERISTICS OF GUIDANCE AND CONTROL SYSTEMS (DC MOTORS) (continued)

Manufacturer	Model	Voltage	No Load Current, ma	No Load Speed, rpm	Governed Torque, oz-in.	Governed Voltage	Governed Speed, rpm	Full Load or Rated Torque, oz-in.	Full Load or Rated Current, ma	Full Load or Rated Speed, rpm	Minimum Starting Torque, oz-in.	Rotation	Type
Barber Colman	BYQM 3132	6	--	332	--	--	--	2.9	--	278	--	--	Ungoverned
	BYQM 3133	12	--	360	--	--	--	3.6	--	290	--	--	Ungoverned
	BYQM 3134	6	--	169	--	--	--	5.7	--	140	--	--	Ungoverned
	BYQM 3135	12	--	180	--	--	--	7.2	--	149	--	--	Ungoverned
	BYQM 3136	6	--	83	--	--	--	10.5	--	69	--	--	Ungoverned
	BYQM 3137	12	--	90	--	--	--	13	--	72	--	--	Ungoverned
	BYQM 3138	6	--	41	--	--	--	1.3	--	34	--	--	Ungoverned
	BYQM 3139	12	--	45	--	--	--	1.7	--	36	--	--	Ungoverned
	CYQM 23040	12	150	--	1	12	2400	--	--	--	4	CW	Governed
	CYQM 23300	12	80	2750	--	--	--	0.6	200	2250	3.2	Reversible	Ungoverned
	CYQM 23410-31	12	80	69	--	--	--	16	190	51	--	--	Ungoverned
		24	85	138	--	--	--	32	285	102	--	--	Ungoverned
	CYQM 23410-41	12	80	20.5	--	--	--	49	190	15.4	--	--	Ungoverned
		24	85	42	--	--	--	98	285	31	--	--	Ungoverned
	CYQM 23410-51	12	80	6	--	--	--	148	190	4.6	--	--	Ungoverned
		24	85	12	--	--	--	240	250	10	--	--	Ungoverned
	CYQM 23410-61	12	80	1.85	--	--	--	240	150	1.6	--	--	Ungoverned
		24	85	3.7	--	--	--	240	150	3.7	--	--	Ungoverned
	CYQM 23610-31	12	40	41	--	--	--	10	75	31	--	--	Ungoverned
		24	45	82	--	--	--	20	120	62	--	--	Ungoverned
	CYQM 23610-41	12	40	12.4	--	--	--	30	75	9.2	--	--	Ungoverned
		24	45	24.8	--	--	--	60	120	18.5	--	--	Ungoverned
	CYQM 23610-51	12	40	3.7	--	--	--	90	75	2.7	--	--	Ungoverned
		24	45	7.4	--	--	--	180	120	5.5	--	--	Ungoverned
	CYQM 42800	12	250	4900	--	--	--	1.5	750	3800	7	Reversible	Ungoverned
	CYQM 42810-31	12	190	147	--	--	--	56	950	112	--	--	Ungoverned
	CYQM 42810-41	12	190	44	--	--	--	170	950	33	--	--	Ungoverned
	CYQM 43210-31	12	55	60	--	--	--	25	180	50	--	--	Ungoverned
		24	80	120	--	--	--	50	315	80	--	--	Ungoverned
	CYQM 43210-41	12	55	18	--	--	--	75	180	15	--	--	Ungoverned

TABLE D-20. SUMMARY OF CHARACTERISTICS OF GUIDANCE AND CONTROL SYSTEMS (DC MOTORS) (continued)

Manufacturer	Model	Voltage	No Load Current, ma	No Load Speed, rpm	Governed Torque, oz-in.	Governed Voltage	Governed Speed, rpm	Full Load or Rated Torque, oz-in.	Full Load or Rated Current, ma	Full Load or Rated Speed, rpm	Minimum Starting Torque, oz-in.	Rotation	Type
Barber Colman	CYQM 43210-41	24	60	37	--	--	--	150	315	24	--	--	Ungoverned
	CYQM 62800	12	100	3400	--	--	--	2	600	2700	10	Reversible	Ungoverned
	OYLM 43400-50	27	--	28000	--	--	--	0.59	600	12000	3.36	--	--
	OYLM 73300-50	27	--	25000	--	--	--	0.67	650	13500	6.24	--	--
	OYQM 63240-51	6	110	4750	--	--	--	0.26	340	3750	1.25	Reversible	--
	DYQM 63580-51	12	65	5900	--	--	--	0.3	220	4850	1.59	Reversible	--
Air Associates Inc.	KS15042-L01	24	800	5	--	--	--	400	--	--	--	Reversible	--
American Motor	3255P	26	200	4	--	--	--	500	500	--	--	Reversible	--
Delco	5069525	27	--	--	20	--	120	--	--	--	--	--	Governed
	5085170	27	--	412	--	--	--	--	--	--	--	Reversible	--
Dumore	4063-210	115	--	23	--	--	--	--	--	--	--	CCW	--
General Electric	5BA10AJ180	24-28	700	--	--	--	--	15	--	110	--	--	--
	5BA10FJ424	26	--	100	--	--	--	--	--	--	--	--	--
	5BA10FJ441	24	--	300	--	--	--	10	700	135	--	--	--
Globe	5A-1419	12	--	16.5-19	--	--	--	640	--	--	--	--	--
	43A-1043	12	275	54	--	--	--	8	450	51	--	Reversible	--
	B3A-609	--	600	20	130	--	--	--	--	--	--	Reversible	Governed
	B3A-671	24	--	60	--	--	--	--	--	--	--	Reversible	--
	B3A-701	--	500	400	8	26	--	--	--	--	--	Reversible	Governed
	B9A-663	24	--	6	--	--	--	--	-	--	--	Reversible	--
	C5A-1036	26	180	26	--	--	--	200	500	24	--	Reversible	--
	C5A-1052	21-29	--	55	--	--	--	20-45	--	45	--	Reversible	--
	C5A-1054	24-29	--	60	--	--	--	90	--	54	--	Reversible	--
	C5A-1092	26	200	8	--	--	--	370	500	--	--	Reversible	--
Mission Western Eng. Inc.	P5B23R2	28	1000	450	--	--	--	--	--	--	--	Reversible	--
Potter Instrument Co.	S202-6391-1	110	4500	300	--	--	--	--	--	--	--	Reversible	--
Servo-Tek Products	A Series	6	--	10000	--	--	--	0.72	--	7000	--	--	--
	B Series	11	--	10000	--	--	--	1.6	--	7600	--	--	--
	O Series	23	--	10000	--	--	--	2	--	9000	--	--	--

TABLE D-20. SUMMARY OF CHARACTERISTICS OF GUIDANCE AND CONTROL SYSTEMS (DC MOTORS) (continued)

Manufacturer	Model	Voltage	No Load		Governed			Full Load or Rated			Minimum Starting Torque, oz-in.	Rotation	Type
			Current ma	Speed, rpm	Torque, oz-in.	Voltage	Speed, rpm	Torque, oz-in.	Current, ma	Speed, rpm			
Siemens Corp.	BM-01	10-15	--	--	--	--	--	--	--	--	--	--	Variable speed
	BM-02	10-15	--	--	--	--	--	0.21	170	2550-3450	--	--	Variable speed
	BM-03	6-10	--	--	--	--	--	--	--	--	--	--	Variable speed
	BM-04	10-15	--	--	--	--	--	--	--	--	--	--	Variable speed
	BM-05	6-10	--	--	--	--	--	0.42	370	2550-3450	--	--	Variable speed
	BM-06	10-15	--	--	--	--	--	0.42	270	2550-3450	--	--	Variable speed
	BM-07	10-15	--	--	--	--	--	0.42	450	600-6000	--	--	Variable speed
	BM-08	6-10	--	--	--	--	--	--	--	--	--	--	Variable speed
	BM-09	21-26	--	--	--	--	--	--	--	--	--	--	Variable speed
	BM-10	21-26	--	--	--	--	--	2.08	730	600-6000	--	--	Variable speed
	BM-11	8.5-9.5	--	--	--	--	--	--	--	--	--	--	Variable speed
	BM-12	8.5-9.5	--	--	--	--	--	0.42	370	2550-3550	--	--	Variable speed
	BM-13	21-26	--	--	--	--	--	--	--	--	--	--	Variable speed
	BM-14	21-26	--	--	--	--	--	7	2750	600-6000	--	--	Variable speed
	BM-15	21-26	--	--	--	--	--	7	1530	3400-4600	--	--	Variable speed
	BM-16	10-15	--	--	--	--	--	30	270	25-35	--	--	Variable speed
	BM-17	10-15	--	--	--	--	--	106	270	6-8	--	--	Variable speed
	BM-18	10-15	--	--	--	--	--	17	270	50-70	--	--	Variable speed
	BM-19	10-16	--	--	--	--	--	12	520	30-200	--	--	Variable speed
	BM-20	10-15	--	--	--	--	--	--	--	--	--	--	Variable speed
	BM-21	21-26	--	--	--	--	--	--	--	--	--	--	Variable speed
	BM-22	10-15	--	--	--	--	--	15	450	12-120	--	--	Variable speed
	BM-23	10-15	--	--	--	--	--	1.8	450	110-1100	--	--	Variable speed

TABLE D-20. SUMMARY OF CHARACTERISTICS OF GUIDANCE AND CONTROL SYSTEMS (DC MOTORS) (continued)

Manufacturer	Model	Voltage	No Load		Governed			Full Load or Rated			Minimum Starting Torque, oz-in.	Rotation	Type
			Current, ma	Speed, rpm	Torque, oz-in.	Voltage	Speed, rpm	Torque, oz-in.	Current, ma	Speed, rpm			
Siemens Corp.	BM-24	1D-15	--	--	--	--	--	4.3	450	48-480	--	--	Variable speed
	BM-26	6-1D	--	--	--	--	--	0.42	300	1500-3000	--	--	Variable speed
	BM-27	21-26	--	--	--	--	--	412	730	2-20	--	--	Variable speed
Western Gear	P5B24R3	24	1500	250	--	--	--	45	--	--	--	Reversible	--

TABLE D-21. SUMMARY OF CHARACTERISTICS OF GUIDANCE AND CONTROL SYSTEMS (GENERATORS)

Manufacturer	Model	Weight, oz	Inertia, g-cm2	Voltage/ 1000 RPM, v	Maximum RPM	Maximum Driving Torque, oz-in.	Armature Resistance, ohms	Armature Inductance, henrys	Brush Life, hr	Mounting
Servo-Tek Products	SA-740A-2	3	8.5	7	12,000	0.2	325	0.18	100,000	Face
	SA-740A-7	3	8.5	2.6	12,000	0.2	38	0.024	100,000	Face
	SA-740B-1	4	15	20.8	8,000	0.2	880	0.56	100,000	Face
	SA-757A-2	3	8.5	7	12,000	0.2	325	0.18	100,000	Face
	SA-757B-1	5	15	20.8	8,000	0.2	880	0.56	100,000	Face
	SB-740A-2	3	8.5	7	12,000	0.2	325	0.18	100,000	Flange
	SB-740A-7	3	8.5	2.6	12,000	0.2	38	0.024	100,000	Flange
	SB-740B-1	4	15	20.8	8,000	0.2	880	0.56	100,000	Flange
	SB-757A-2	3	8.5	7	12,000	0.2	325	0.18	100,000	Flange
	SB-757B-1	5	15	20.8	8,000	0.2	880	0.56	100,000	Flange
	SN-763A-2	4	8.5	7	12,000	0.2	325	0.18	100,000	Automotive
	SN-763A-7	4	8.5	2.6	12,000	0.2	38	0.024	100,000	Automotive
	SN-763B-1	6	15	20.8	8,000	0.2	880	0.56	100,000	Automotive
	ST-7253A-2	4	8.5	7	12,000	0.2	--	--	100,000	Flange
	ST-7253A-7	4	8.5	2.6	12,000	0.2	--	--	100,000	Flange
	ST-7253B-1	5	15	20.8	8,000	0.2	--	--	100,000	Flange
	ST-7253D-1	8.5	30	45	5,000	0.2	--	--	25,000	Flange
	ST-7336A-7	3	8.5	2.6	12,000	0.7	--	--	100,000	Face
	ST-7336A-2	3	8.5	7	12,000	0.7	--	--	100,000	Face
	ST-7336B-1	5	15	20.8	8,000	0.7	--	--	100,000	Face
	ST-7337A-2	3	8.5	7	12,000	1	--	--	100,000	Face
	ST-7337B-1	5	15	20.8	8,000	1	--	--	100,000	Face
	ST-7346D-1	8.5	30	45	5,000	1	--	--	25,000	Flange

TABLE D-22. SUMMARY OF CHARACTERISTICS OF GUIDANCE AND CONTROL SYSTEMS (LEDEX SIZE 2 SOLENOID)

			Duty Cycle (t = 'on' time in seconds)			
			Continuous	Intermittent		
				t ≤ 100	t ≤ 36	t ≤ 7
				Pulsed		
				t ≤ 162	t ≤ 44	t ≤ 8
		Maximum watts at 20°C	7	14	28	70
		Ampere turns at 20°C	425	602	849	1350
Awg.	Ohms	Turns	Volts DC	Volts DC	Volts DC	Volts DC
24	0.68	130	2.2	3.2	4.5	7.1
25	1.16	174	2.8	4.0	5.7	9.0
26	1.96	231	3.6	5.1	7.2	11.5
27	3.16	296	4.5	6.4	9.0	14.4
28	5.10	378	5.7	8.1	11.5	18.2
29	6.94	423	7.0	9.9	13.9	22
30	11.03	530	8.8	12.5	17.7	28
31	16.85	649	11.0	15.6	22	35
32	28.15	858	13.9	19.8	28	44
33	42.75	1036	17.5	25	35	56
34	69.56	1312	23	32	45	72
35	112	1674	29	40	57	91
36	148	1765	36	51	71	113
37	222	2090	45	64	90	143
38	353	2650	57	80	113	180
39	568	3380	71	101	143	227
40	882	4200	89	126	178	283

TABLE D-23. SUMMARY OF CHARACTERISTICS OF GUIDANCE AND CONTROL SYSTEMS (LEDEX SIZE 2E SOLENOID)

				Duty Cycle (t = 'on' time in seconds)			
			Continuous	Intermittent			
				t ≤ 100	t ≤ 36	t ≤ 7	t ≤ 2.5
				Pulsed			
				t ≤ 162	t ≤ 44	t ≤ 8	t ≤ 2.8
		Watts at 20°C	7	14	28	70	140
		Ampere turns at 20°C	425	602	849	1350	1904
				Starting Torque, lb-in.			
		25° stroke	0.20	0.40	0.71	1.40	1.70
		35° stroke	0.15	0.30	0.54	1.10	1.30
		45° stroke	0.10	0.20	0.36	0.72	0.89
Awg.	Ohms	Turns	Volts DC	Volts DC	Volts DC	Volts DC	Volts DC
24	0.68	130	2.2	3.2	4.5	7.1	10.0
25	1.16	174	2.8	4.0	5.7	9.0	12.7
26	1.96	231	3.6	5.1	7.2	11.5	16.2
27	3.16	296	4.5	6.4	9.0	14.4	20
28	5.10	378	5.7	8.1	11.5	18.2	26
29	6.94	423	7.0	9.9	13.9	22	31
30	11.03	530	8.8	12.5	17.7	28	40
31	16.85	649	11.0	15.6	22	35	49
32	28.15	858	13.9	19.8	28	44	63
33	42.75	1036	17.5	25	35	56	79
34	69.56	1312	23	32	45	72	101
35	112	1674	29	40	57	91	128
36	148	1765	36	51	71	113	160
37	[illegible]	2090	45	64	90	143	202
38	353	2650	57	80	113	180	254
39	568	3380	71	101	143	227	320
40	882	4200	89	126	178	283	400

TABLE D-24. SUMMARY OF CHARACTERISTICS OF GUIDANCE AND CONTROL SYSTEMS (LEDEX SIZE 5 EC SOLENOID)

			Duty Cycle (t = 'on' time in seconds)			
			Continuous	Intermittent		
				t ≤ 100	t ≤ 36	t ≤ 10
				Pulsed		
				t ≤ 160	t ≤ 44	t ≤ 13
		Watts at 20°C	21	42	84	210
		Ampere turns at 20°C	1015	1440	2030	3210
Awg.	Ohms	Turns	Volts DC	Volts DC	Volts DC	Volts DC
19	0.42	150	2.9	4.0	5.7	9.0
20	0.58	170	3.5	4.9	6.9	11.0
21	1.00	228	4.5	6.4	8.9	14.1
22	1.68	301	5.7	8.1	11.4	17.9
23	2.70	384	7.2	10.1	14.3	23.0
24	4.30	486	9.0	12.7	18.0	28.0
25	6.66	590	11.5	16.2	23.0	36.0
26	10.3	737	14.0	20.0	28.0	44.0
27	15.7	900	17.7	25.0	35.0	56.0
28	26.6	1190	23	32	45	72
29	38.0	1380	28	40	56	89
30	62.1	1768	36	51	71	113
31	96.1	2166	45	64	90	143
32	157	2816	57	80	113	179
33	241	3432	71	101	143	226
34	364	4108	90	128	180	285
35	566	4920	117	166	234	370
36	910	6340	146	207	292	462
37	1224	6800	183	260	366	--
38	2060	9000	233	330	465	--
39	3145	11000	290	412	--	--
40	5600	15550	366	--	--	--

TABLE 0-25. SUMMARY OF CHARACTERISTICS OF GUIDANCE AND CONTROL SYSTEMS (LEDEX SIZE 5S SOLENOID)

				Duty Cycle (t = 'on' time in seconds)			
			Continuous	Intermittent			
				t ≤ 100	t ≤ 36	t ≤ 10	t ≤ 3.5
				Pulsed			
				t ≤ 160	t ≤ 44	t ≤ 13	t ≤ 4.6
		Watts at 20°C	21	42	84	210	420
		Ampere turns at 20°C	860	1220	1720	2730	3853
				Starting Torque, lb-in.			
		25° stroke	1.9	4.1	7.3	12.1	13.2
		35° stroke	0.9	2.6	4.5	7.8	9.2
		45° stroke	0.7	1.7	3.4	6.3	6.9
		67-1/2° stroke	0.5	1.2	2.2	3.9	4.9
		95° stroke	0.20	0.5	1.0	1.9	2.6
Awg.	Ohms	Turns	Volts DC	Volts DC	Volts DC	Volts DC	Volts DC
19	0.31	110	2.4	3.5	4.9	7.8	11.0
20	0.43	125	3.0	4.2	6.0	9.5	13.3
21	0.74	168	3.8	5.4	7.6	12.1	17.0
22	1.26	224	4.8	6.9	9.7	15.4	22
23	2.03	288	6.1	8.6	12.1	19.2	27
24	3.20	360	7.6	10.8	15.3	24	34
25	4.91	440	9.6	13.6	19.2	31	43
26	7.72	550	12.1	17.1	24	38	54
27	11.12	636	15.0	21	30	48	67
28	18.79	840	19.2	27	39	61	86
29	30.48	1088	24	34	48	77	108
30	44.86	1275	30	43	61	96	136
31	70.90	1596	38	54	76	121	171
32	109	1974	47	67	95	150	212
33	175	2496	60	86	121	192	271
34	270	3042	76	108	152	242	341
35	414	3600	99	140	198	314	443
36	610	4200	125	177	250	397	560
37	940	5200	156	221	311	493	697
38	1560	6820	197	279	393	624	881
39	2545	8910	246	348	491	780	1101
40	3960	11000	310	439	619	983	1387

TABLE D-26. SUMMARY OF CHARACTERISTICS OF GUIDANCE AND CONTROL SYSTEMS (LEDEX SIZE 5 SF SOLENOID)

			Duty Cycle (t = 'on' time in seconds)			
			Continuous	Intermittent		
				t ≤ 100	t ≤ 36	t ≤ 10
				Pulsed		
				t ≤ 160	t ≤ 44	t ≤ 13
		Watts at 20°C	21	42	84	210
		Ampere turns at 20°C	860	1220	1720	2730
Awg.	Ohms	Turns	Volts DC	Volts DC	Volts DC	Volts DC
19	0.31	110	2.4	3.5	4.9	7.8
20	0.43	125	3.0	4.2	6.0	9.5
21	0.74	168	3.8	5.4	7.6	12.1
22	1.26	224	4.8	6.9	9.7	15.4
23	2.03	288	6.1	8.6	12.1	19.2
24	3.20	360	7.6	10.8	15.3	24
25	4.91	440	9.6	13.6	19.2	31
26	7.72	550	12.1	17.1	24	38
27	11.12	636	15.0	21	30	48
28	18.79	840	19.2	27	39	61
29	30.48	1088	24	34	48	77
30	44.86	1275	30	43	61	96
31	70.90	1596	38	54	76	121
32	109	1974	47	67	95	150
33	175	2496	60	86	121	192
34	270	3042	76	108	152	242
35	414	3600	99	140	198	314
36	610	4200	125	177	250	397
37	940	5200	156	221	311	493
38	1560	6820	197	279	393	624
39	2545	8910	246	348	491	780
40	3960	11000	310	439	619	983

APPENDIX E

TERRAIN AND WEATHER INFLUENCE ON MOBILITY

APPENDIX E

TERRAIN AND WEATHER INFLUENCE ON MOBILITY

Influence of Terrain and Weather on Land Vehicle Mobility

The missions outlined in Appendix B are not performed in a vacuum; they involve movement over real, and possibly quite difficult, terrain. A tremendous amount of effort has gone into quantizing terrain information for the purposes of off-road vehicle design and deployment, but this information is of little value here; most of the studies undertaken by the Land Locomotion Center or the Mobility Environmental Research Study (MERS) group or the Waterways Experimental Station (WES) or others were aimed at developing engineering information for design of full-scale vehicles: tanks, trucks, APC's and so on. Large-vehicle problems of ground failure, draw-bar pull and slippage assume less importance, and the questions of obstacle avoidance and gradability take on more importance when very small vehicles operating off-road are considered. A rut or rock wall may be a nuisance to a jeep or tank but a barrier to a much smaller vehicle. As a result, where large-vehicle mobility is generally cast in the framework of macro-terrain features (plains, rugged hills, marshes, etc.) and soil cone index readings*, small-vehicle designers would be concerned more with micro-features: maximum ditch dimensions (depth, width, side slopes), frequency of obstacles encountered, degree of entanglement expected (vines, brush, etc.), and soil cone index.

One means which the Army has used to come to grips with the problem of trafficability of various soils under various conditions is "Soil Trafficability Classification". (Chapter 9, "Trafficability", of U. S. Army Field Manual 30-10, has been reprinted here [see pp E-4 through E-9].)

Each military vehicle is assigned to one of seven categories based on the lowest soil rating cone index which will support the vehicle for 50 passes. This category number is entered on the abscissa of one of three soil trafficability classification charts corresponding to: high topography, wet

---

* Numerical indication of the carrying ability (resistance to penetration by wheels and tracks of vehicles) of a soil.

season condition; low topography, wet season condition; and low topography, high moisture condition. The ordinate of each chart is a scale of soil types. The probability of the vehicle "going" on level terrain is found depending on which region of the graph the intersection of vehicle category and soil type falls (see Figure 60, p E-6.) As can be seen in Figure 60 a vehicle with a low category number always stands a better chance of making it on any given terrain than one in a higher category. Table 3, Vehicle Categories (page E-8), states that, for Category I, "the M29 Weasel, M76 Otter, and Canadian snowmobile are the only known standard vehicles in this category". Unfortunately, a vehicle cone index is not available for the commercial ATV's, snowmobiles and other special-purpose vehicles described in Appendix D. The best that can be done is to estimate which category a given vehicle might fall into, and then compare it with others on this basis; and because they are generally "small" vehicles, additional emphasis must be given to the small-vehicle problems mentioned before: obstacle/vehicle relative size and frequency of encounter, maximum grades encountered, terrain microstructure (choppiness) and degree of entanglement expected.

Influence of Sea State and Current on Water Vehicle Performance

The means by which the terrain is characterized for water-borne craft is somewhat more straightforward than for land vehicles. The term "sea state" has come to designate the roughness of the water and air environment under a wide range of wind velocities and wave heights, lengths, and periods. Sea state is an empirically derived numerical index, from 0 to 17 on the Beaufort scale, which correlates wind, waves, and swell into a composite which describes the conditions one would face at sea. The term was derived from observations of waves and wind on the open sea where the "fetch" or length over which a wind acts is very long. However, winds on lakes, ponds and rivers, coupled with currents in flowing waterways, produce surface conditions similar to sea states encountered on the open ocean. The main difference is the general absence of swell (long period waves) in enclosed waters, but swell at sea corresponds to macro-terrain on land and is relatively unimportant so far as small vehicles are concerned.

Thus, a statement that Vessel A can be driven through Sea State 4 while Vessel B can only stand Sea State 3 clearly shows that A is more seaworthy

than B. Unfortunately, it is very difficult to make such statements accurately simply from observing the size, shape, and construction of a given craft. It may be possible, however, to point out particularly good or bad features on a given vessel which bear on its seaworthiness. The technical assessment of water vehicles concentrates on examining these particular features of the individual craft.

Influence of Terrain on Amphibious Vehicle Performance

Air-cushion vehicles (ACV's), airboats and the more standard wheeled or tracked amphibious vehicles have been grouped together for our purposes under the generic title "Amphibious Vehicles". Probably the single terrain feature which presents the most difficulty to all of these vehicles equally is a vertical or near-vertical obstacle at the water's edge. This entrance or exit angle is extremely critical for all "classical" amphibious vehicles such as the Army DUKW, BARC, and so on, and becomes a real problem with ACV's when the obstacle height approaches the height of the air entrapment skirt. Other obstacles of a localized nature can usually be avoided by both types of amphibians without much trouble, but the water's edge obstacles - river banks, rice paddy dikes, beach escarpments, or rocky shore lines - can all act as line barriers to amphibious vehicles; this can defeat the mission. These were the major criteria used to judge the relative merits of the various amphibious craft.

Over flat land, the ACV's are capable of much higher speeds than the wheeled or tracked vehicles, which, in turn, have much better gradability than the ACV's.

CHAPTER 9

TRAFFICABILITY

169. Estimating Soils Trafficability

The purpose of this chapter is to assist intelligence and reconnaissance personnel to determine the trafficability of soils to support cross-country movement of military vehicles. Increased emphasis on the military concept of dispersion, which requires cross-country movement has increased the requirement for information on soil trafficability. Most information on trafficability pertains to military vehicles operating on various unfrozen soils in the temperate zones. The procedures for measurement of soil trafficability can also be applied to unfrozen soils that have been subjected to freeze-thaw cycles. An estimate of trafficability can be made with the aid of this chapter if something is known of the general weather conditions, the topography and the soils of the area.

170. Weather and Climate

Information about the weather and climate is available from meteorological records, and climatology textbooks, and by interrogation of prisoners. Only two general conditions of weather apply to trafficability estimates, the dry period and the wet period.

a. Trafficability During Dry Period. During a dry period all soils usually are passable unless the area is low-lying and poorly drained or is kept wet by underground springs. Sand in a dry state is less trafficable than in a wetter condition (with the exception of quicksand).

b. Trafficability During Wet Period. When moisture is added to a soil its strength is changed. Different soils are affected differently by moisture. During a wet period, all soils with the exception of clean sands and gravels provide poor trafficability. The relative trafficability ratings of soil types under set conditions are given in figure 60. This figure is explained in paragraph 178.

171. Topography

The effects of slopes on soil requirements for vehicle performance can be shown in quantitative units when actual measurements of the cone index (para 174*d*) can be made, but in estimates of trafficability only general statements concerning slopes are feasible. Slopes require better soil traction conditions for vehicle movement than does level terrain of a similar soil type. Other factors pertaining to trafficability that must be kept in mind are that ridges are generally more trafficable than the adjacent valley, that downhill travel is easier than uphill travel, and that low tire pressure increases traction. During the dry season, sand slopes of approximately 30 percent are impassable. Fine-grained soils and sands with fines which are poorly drained may be trafficable up to a 45 percent slope. During the wet season a 30 percent slope is the maximum that should be tried on any type soil.

172. Soils Maps

Two types of soils maps exist. One type classifies the soils according to the Unified Soil Classification System (USCS), as used in determining trafficability. The second type of soils map employs the agricultural system of soil classification (ASSC). This type is not used by the military. It is mentioned here to avoid confusing it with the USCS. Soils are formed by the action of the following factors: parent material, climate, age, chemical action, topography, and vegetation. A trained analyst can estimate the soil types by using a geologic map, providing he has a general knowledge of the climate, the topography, and the vegetation of the area.

173. Aerial Photographs

The full utilization of aerial photos in estimating trafficability is presently being studied. At present the following information pertaining to trafficability is obtained from aerial photographs.

a. Topography. Aerial photographs are a good source of topographic information. Estimates of elevations and slopes can be made from stereopairs by properly instructed personnel. Accurate elevations and slopes can be obtained by trained operators using mechanical equipment such as Multiplex and Kelch plotters.

b. Soils and Moisture Conditions. In the present stage of development, the techniques for identifying soils from airphotos are so complex that only well-trained technicians can employ them to their fullest extent. However, certain general facts may be used to advantage by personnel with a minimum of training. For instance, orchards usually are planted in well-drained, sandy soils; vertical cuts are an evidence of deep loessial (silty) soils; tile drains in agricultural areas indicate the presence of poorly drained soils, probably silts and clays. On a given photo, light color tones generally signify higher elevations, sandier soils, and lower moisture contents than do dark color tones. The same color tone does not always indicate the same soil conditions even on the same photo. Color tone may have entirely different significance on two separate photos. Also, natural tones are apt to be obscured and modified by tones created by vegetation (natural and cultivated), plowed fields, and shadows of clouds.

c. Vegetation. Dense grass, especially if wet, will cause slipperiness. Tall grass will often restrict visibility. Heavier vegetation such as brush and trees will decrease trafficability if the vehicles must push aside this vegetation as they advance. The presence of vegetation in sands usually stabilizes the soil, thus increasing its trafficability. Decaying vegetation including the roots, found especially in the northern latitudes, adds to the support of the soil if the soil is weak. The limited testing that has been done shows that if the mat of partially decayed vegetation is 6 or more inches thick it will support 40 to 50 passes of very light vehicles such as the M29 amphibious cargo carrier. Heavier vehicles will break through after 2 or 3 passes.

d. Obstacles. A complete assessment of the trafficability of a given area must include an evaluation of obstacles such as forests, rivers, boulders, ditches, hedgerows, steep slopes and cliffs, and embankments. Aerial photographs are valuable in identifying these features.

174. Trafficability Terms

a. Trafficability. The capacity of a soil to withstand traffic of military vehicles.

b. Bearing Capacity. The ability of a soil to support a vehicle without excessive settlement of the vehicle. California Bearing Ratio is used in denoting design values.

c. Traction Capacity. Ability of a soil to resist the vehicle tread thrust required for steering and propulsion.

d. Cone Index. A numerical indication of the carrying ability (resistance to penetration by wheels and tracks of vehicles) of a soil. An index of the shearing resistance of soil obtained with the cone penetrometer; a dimensionless number representing resistance to penetration into the soil of a 30° cone with a ½-sq in. base area (actually load in pounds on cone base area in square inches). TM 5-530 discusses this in detail.

e. Remolding. The changing or working of a soil by traffic, or by a remolding test. Remolding may have a beneficial, neutral, or detrimental effect on soil strength.

f. Remolding Index. The ratio of remolded soil strength to original strength, determined in accordance with procedures described in TM 5-530.

g. Rating Cone Index. The measured cone index multiplied by the remolding index; it expresses the soil-strength rating of an area.

h. Critical Layer. The soil layer in which the rating cone index is considered a significant measure of trafficability, or the layer of soil which is regarded as being most pertinent to establishing relationship between soil strength and vehicle performance. Its depth varies with the weight and type of vehicle and the soil

profile, but it is normally the layer lying 6 or 12 inches below the surface.

i. Vehicle Cone Index. The index assigned to a given vehicle that indicates the minimum soil strength in terms of rating cone index required to permit 50 passes of the vehicle.

j. Stickiness. The ability of a soil to adhere to vehicles, wheels, and tracks.

k. Slipperiness. Low traction capacity of a soil's surface due to its lubrication by water or mud.

l. Mobility Index. A dimensionless number which results from a consideration of certain vehicle characteristics.

m. Maximum Tractive Effort. The maximum continuous towing force or pull a vehicle can exert expressed as a ratio or percentage of its own weight.

n. Fine-Grained Soil. A soil of which more than 50 percent of the grains, by weight, will pass a No. 200 sieve (Unified Soils Classification System (USCS)).

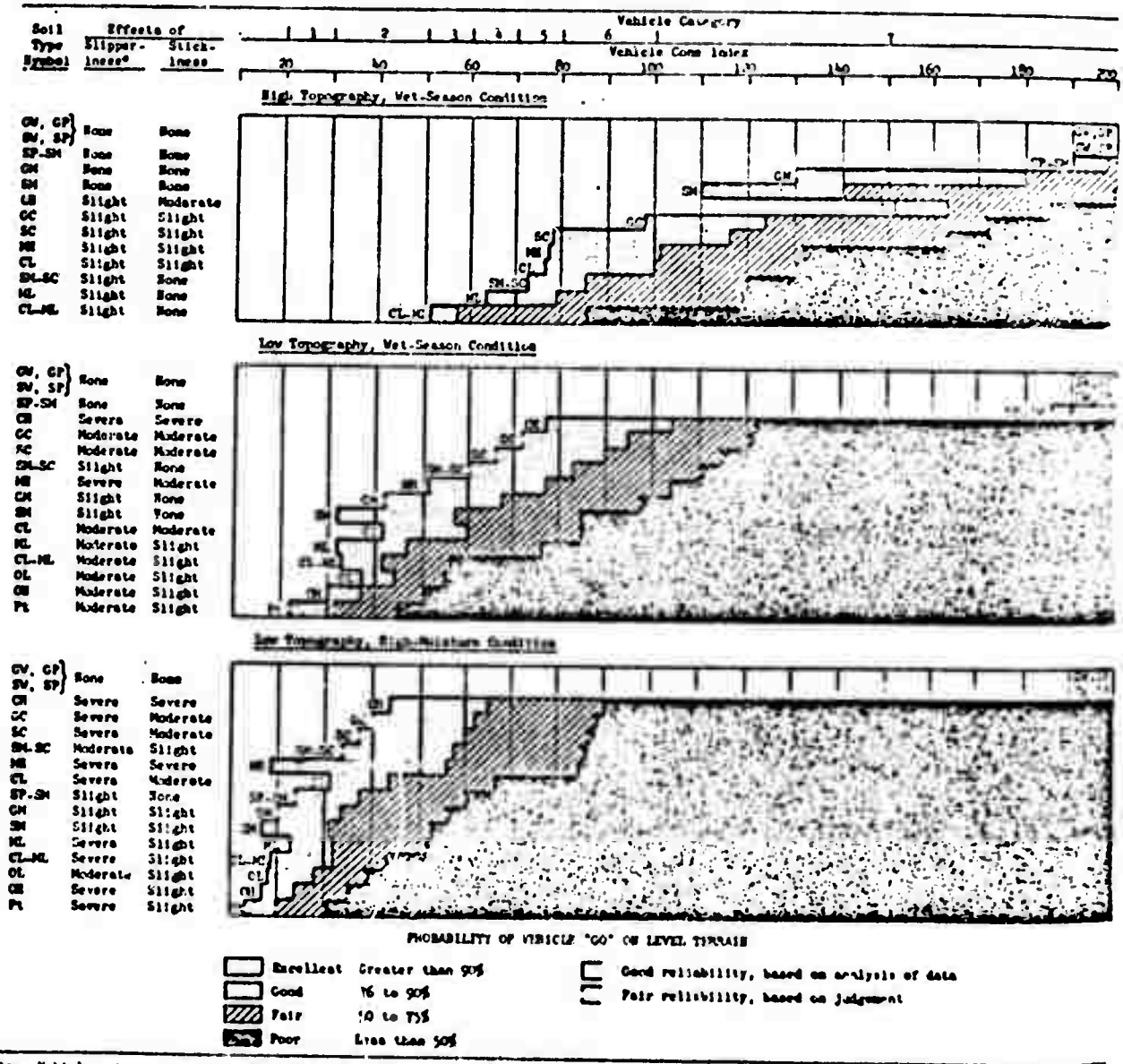

Note: Vehicle category and cone index range are given on table II.

* Applies only to wheeled vehicles without traction devices.

Figure 60. Soil trafficability classification (USCS).

o. Coarse-Grained Soil. A soil of which 50 percent or more of the grains, by weight, will be retained on a No. 200 sieve.

p. Sand with Fines, Poorly Drained. A sand in which water content greatly influences the trafficability characteristics. These soils react to traffic in a manner similar to fine-grained soils. They usually contain 7 percent or more of material passing the No. 200 sieve, and little or no gravel.

175. Soil Trafficability Table

a. Soil Type Symbols. The soil type symbols used on figure 60 are those employed in the Unified Soil Classification System (USCS). The symbols are given on the extreme left of the figure and also in the graphic portion. The duplication aids in the reading of the graphs. These letter symbols are explained in table 2. Hyphenated letters indicate a mixture of types of soils.

Table 2. Soils Symbols

Symbols	
GW	gravel-sand mixtures, little or no fines.
GP	gravel-sand mixtures, little or no fines.
SW	gravelly sands, little or no fines.
SP	gravelly sands, little or no fines.
CH	inorganic clays of high plasticity, fat clays.
GC	gravel-sand-clay mixtures.
SC	sand-clay mixtures.
CL	gravelly clays, sandy clays, inorganic clays of low to medium plasticity, lean clays, and silty clays.
GM	gravel-sand-silt mixtures.
SM	sand-silt mixtures.
ML	low plasticity silts.
MH	inorganic silts, micaceous or diatomaceous fine sandy or silty soils and elastic silts.
OL	organic silts and organic silty clays of low plasticity.
OH	organic clays of medium to high plasticity and organic silts.

Peat, muck, and swamp soils are not classified in the above list because such soils are almost always impassible except for light amphibious-type vehicles.

b. Strength Measurements. The probable ranges of the cone index (CI), the remolding index (RI), the rating cone index (RCI), and the mean rating cone index are given on figure 60 for those desiring this technical information. For most trafficability purposes this information may be folded out of view to simplify the reading of the remainder of the trafficability chart. Information on the strength measurements is given in TM 5-530.

176. Slipperiness and Stickiness

The information on figure 60 pertaining to stickiness and slipperiness is self-explanatory. The following is general information on each of these two factors.

a. Stickiness. No instrument for measuring the effects of stickiness on the performance of vehicles has been devised. Stickiness will occur in all fine-grained soils when they are comparatively wet. The greater the plasticity of soil, the more severe are the effects of stickiness. In general, stickiness will have adverse effect on the speed and facility of travel and steering of all vehicles. It will immobilize small tracked vehicles like the M29 weasel, but will not stop the larger and more powerful military vehicles. Removal of fenders will reduce stickiness effects on some vehicles.

b. Slipperiness. Like stickiness, the effects of slipperiness cannot be measured quantitatively. Soils which are covered with water or a layer of soft plastic soil usually are slippery and often cause steering difficulty, especially to rubber-tired vehicles. They can often immobilize vehicles, especially when slipperiness is associated with low bearing capacity. Slipperiness effects assume greater significance on slopes. Sometimes slopes whose soil strength is adequate may not be passable because of slipperiness. The use of chains on rubber-tired vehicles usually will be of benefit in slippery conditions.

177. Vehicle Categories

Military vehicles are divided into seven categories according to a cone index range as shown in table 3. These vehicle categories, 1 through 7, are shown at the top of figure 60.

a. Vehicle Cone Index. This index is shown directly below the vehicle category range on figure 60. It is helpful in showing the trafficability of vehicles below category 1 and subdivides each of the seven vehicle categories, especially category 7.

Table 3. Vehicle Categories

Category	Vehicle cone index range	Vehicles
1	20-29	The M29 weasel, M76 Otter, and Canadian snowmobile are the only known standard vehicles in this category.
2	30-49	Engineer and high-speed tractors with comparatively wide tracks and low contact pressures.
3	50-59	The tractors with average contact pressures, the tanks with comparatively low contact pressures and some trailed vehicles with very low contact pressures.
4	60-69	Most medium tanks, tractors with high contact pressures, and all wheel-drive trucks and trailed vehicles with low contact pressures.
5	70-79	Most all-wheel-drive trucks, a great number of trailed vehicles, and heavy tanks.
6	80-99	A great number of all-wheel-drive and rear-wheel-drive trucks, and trailed vehicles intended primarily for highway use.
7	100 or greater	Rear-wheel-drive vehicles and others that generally are not expected to operate off roads, especially in wet soils.

b. Graphic Portion of Figure 60. The legend for the shading of the three graphic portions of figure 60 is given at the bottom part of the figure. The white indicates excellent trafficability, the stippled good, the striped fair, and the black indicates poor to intrafficable soil. The topography and soil conditions are shown in the following three graphs in figure 60.

(1) High topography, (higher areas of the terrain) wet-season condition.

(2) Low topography, (low areas of the terrain) wet-season condition (saturated).

(3) Low topography, high-moisture condition (wet, but below saturation point).

178. Use of Figure 60

a. Mission. You have a rear-wheel drive truck with which to deliver supplies cross country to another area. You have the following information:

(1) Vehicle cone index: 85

(2) Topography: level high topography

(3) Type of soil: clayey sands (SC)

b. Question. Is this trip feasible from the standpoint of trafficability?

c. Procedure in Determining Trafficability.

(1) You know that the vehicle cone index of the truck is 85. Table 3 shows the vehicle to be in category 6. The vehicle cone index range (80-99) to the right of the category in table 3 and the written description under *vehicles* verify the category of your truck.

(2) Locate vehicle category 6 at the top of figure 60.

(3) Find the vehicle cone index 85. The number 85 must be interpolated on the vehicle cone index line in the space between 80 to 100.

(4) Find the soil type SC. This is given under *Soil type symbol* in the left column of the figure, and more conveniently on the graphic portion of the figure.

(5) From the 85 (interpolated) on the vehicle cone index, move downward on the high topography, wet-season condition graphic rectangle to the area marked SC. This area is stippled. Your legend at the bottom of figure shows that the trafficability for your vehicle is *good* in this area. Therefore, the trip is feasible from the standpoint of trafficability. The marking around the soil type area on the figure indicates that the trafficability interpretation on the chart has good reliability, as you may note in the legend. (Good reliability based on analysis of data.)

d. Trafficability for Same Truck and Soil Type on Low Topography, Wet-Season Condition. From the 85 (interpolated) on the vehicle cone index, move downward into the *low topography, wet-season condition* graphic rectangle to soil type SC. Note that the trafficability is *good*, as indicated by the stippling. Reliability of this trafficability interpretation is fair, based on judgment.

e. Trafficability for the Same Truck and

Same Soil Type on Low Topography, High Moisture Condition. **From the 85 (interpolated) on the vehicle cone index, move downward into the *low topography, high-moisture condition* graphic rectangle to soil type SC. Note that the trafficability is only *fair*. Had the vehicle cone index been a few points higher, the trafficability would have been *poor*. The black on this graphic chart indicates poor trafficability and is a warning to "stay off."**

APPENDIX F

HIGHLIGHTS OF CONFERENCE ON MINIATURE, REMOTELY CONTROLLED LAND AND WATER VEHICLES

APPENDIX F

HIGHLIGHTS OF CONFERENCE ON MINIATURE, REMOTELY CONTROLLED LAND AND WATER VEHICLES

These highlights of the Conference, which was held on June 22, 1972, at Battelle-Columbus, do not reflect the official views of Battelle but, rather, present the consensus of the opinion of the participants as well as of individual comments on various topics.

The Conference, attended by 13 individuals representing Government and industry, began with a few, brief introductory remarks. The meeting was then opened to the discussion of remotely controlled (R/C) vehicles. The entire morning session was devoted to concept generation and discussion, while the afternoon was given over to directed discussion of R/C vehicle concepts and to general discussion of potentialities. The following items were covered during the Conference.

Land Vehicles

Mine Detector Mounted on R/C Vehicle. This concept was developed by the Ryan Aeronautical Co., and made use of a Jeep for the vehicle, although a more versatile vehicle could be used.

Walking Vehicles. Such a vehicle can be very small and may be used as a bunker invader or as a vehicle to enter places too small or dangerous for a person.

All-Terrain Vehicle (ATV) Capabilities. Problems and advantages of different types of ATV's were discussed. The aspects considered included vehicle size, tracks, wheels, speed, and reliability.

Clandestine Surveillance. The applicability of vehicles and their requirements for such missions were discussed.

Other Considerations. Discussions were conducted covering the use of R/C vehicles for kamikaze missions, high-risk missions, EOD missions, engineering missions, and psy-war missions. Included was the use of these vehicles as mobile gun mounts, R/C ground targets, and "Terrastar"-type vehicles.

Water Vehicles

SKAMP-Type Vehicles. These vehicles represent a type which relies chiefly upon the wind for power.

High-Speed Bomb Boats. Although these can be detected by radar and by the eye, they are difficult gunnery targets.

Decoy Boats. Vehicles of this sort are used to disperse radar chaff and to draw fire.

KOMAR-Type Boats. These boats provide over-the-horizon missile platforms.

Drift or Minimal-Control Vehicles. This type of craft could be a drift bomb or could be used to set mines by R/C or to pick up UDT swimmers.

Submersibles. Submersibles are among the most complex of R/C water vehicles, with the communication link being the basic limitation.

Other Considerations. Discussions were conducted in the areas of water vehicle size requirements, model boat technology, and bottom-walker vehicle uses.

Amphibious Vehicles

Air-Cushion Vehicles (ACV). Although this type of vehicle has a speed advantage over conventional boats in marginal waterways, maneuverability is a problem, as is the capability of overcoming obstacles in the vehicle's path.

Air Boats of the Swamp Buggy Type. The ability to apply R/C is limited by problems associated with the boat's speed: water spray and the interaction of the remote pilot with the TV system.

Marsh Screw Vehicles. This type of vehicle is limited to marsh and water, but does fill a mobility gap.

Other Considerations. Included here were comments about a man-lifting platform and a rugged vehicle which could be washed ashore in surf to disgorge a R/C land vehicle.

R/C Military Vehicles

Both in the directed and general discussions, many pertinent comments were made on topics germane to the development and/or use of R/C military vehicles. The topics of comment and discussion included:

(1) The use of arrays of R/C units, controlled from a master unit or performing common functions

(2) The problems, limitations, and capabilities of applying model technology to practical R/C vehicles, and the comparison of model technology to work with systems engineered vehicles

(3) Problems of working to military specifications and requirements

(4) The capabilities and limitations of various power sources

(5) Problems and potential solutions concerned with running gear, command and control systems, the use of TV systems, and telemetry.

Two movies were shown to the attendees. One was a film from the Army Tank-Automotive Command (ATAC) on experimental R/C vehicles. The other was a film concerned with the general development of manipulators and, to some extent, their use with R/C vehicles.