AD-760 569

MANUFACTURE AND DELIVERY OF COMPOSITE MOTOR CASES. VOLUME II

Roger J. Dale

Hercules, Incorporated

Prepared for:

Army Missile Command

April 1973

DISTRIBUTED BY:

NTIS

National Technical Information Service
U. S. DEPARTMENT OF COMMERCE
5285 Port Royal Road, Springfield Va. 22151

AD 760569

AD

HERCULES INCORPORATED
ALLEGANY BALLISTICS LABORATORY
CUMBERLAND, MARYLAND

AO-255-135-01-012

MANUFACTURE AND DELIVERY OF COMPOSITE MOTOR CASES

VOLUME II

FINAL TECHNICAL REPORT

ROGER J. DALE

SPONSORED BY

U. S. ARMY MISSILE COMMAND
RESEARCH, DEVELOPMENT, ENGINEERING AND
MISSILE SYSTEMS LABORATORY
PROPULSION DIRECTORATE
REDSTONE ARSENAL, ALABAMA

CONTRACT DAAH01-72-C-0829

DDC
RECEIVED
MAY 31 1973

APRIL 1973

APPROVED FOR PUBLIC RELEASE; DISTRIBUTION UNLIMITED

Reproduced by
NATIONAL TECHNICAL
INFORMATION SERVICE
U S Department of Commerce
Springfield VA 22151

Best
Available
Copy

HERCULES INCORPORATED
ALLEGANY BALLISTICS LABORATORY
CUMBERLAND, MARYLAND

AO-255-135-01-012

MANUFACTURE AND DELIVERY OF COMPOSITE MOTOR CASES

VOLUME II

FINAL TECHNICAL REPORT

ROGER J. DALE

SPONSORED BY

U. S. ARMY MISSILE COMMAND
RESEARCH, DEVELOPMENT, ENGINEERING AND
MISSILE SYSTEMS LABORATORY
PROPULSION DIRECTORATE
REDSTONE ARSENAL, ALABAMA

CONTRACT DAAH01-72-C-0829

APRIL 1973

THE FINDINGS IN THIS REPORT ARE NOT TO BE CONSTRUED AS AN OFFICIAL DEPARTMENT OF THE ARMY POSITION.

APPROVED FOR PUBLIC RELEASE; DISTRIBUTION UNLIMITED

UNCLASSIFIED

Security Classification

DOCUMENT CONTROL DATA - R & D

(Security classification of title, body of abstract and indexing annotation must be entered when the overall report is classified)

1. ORIGINATING ACTIVITY *(Corporate author)*

Hercules Incorporated
Allegany Ballistics Laboratory
P. O. Box 210
Cumberland, Maryland 21502

2a. REPORT SECURITY CLASSIFICATION

UNCLASSIFIED

2b. GROUP

3. REPORT TITLE

Manufacture and Delivery of Composite Motor Cases

4. DESCRIPTIVE NOTES *(Type of report and inclusive dates)*

Final Report (May 8, 1972 to April 30, 1973)

5. AUTHOR(S) *(First name, middle initial, last name)*

Roger J. Dale

6. REPORT DATE

April 1973

7a. TOTAL NO. OF PAGES

~~271~~ 155

7b. NO. OF REFS

8a. CONTRACT OR GRANT NO.

DAAH01-72-C-0829

b. PROJECT NO.

c.

d.

9a. ORIGINATOR'S REPORT NUMBER(S)

AO-255-135-01-012

9b. OTHER REPORT NO(S) *(Any other numbers that may be assigned this report)*

10. DISTRIBUTION STATEMENT

Approved for public release; distribution unlimited

11. SUPPLEMENTARY NOTES

12. SPONSORING MILITARY ACTIVITY

U. S. Army Missile Command
Research, Development, Engineering and
Missile Systems Laboratory
Propulsion Directorate

13. ABSTRACT

This report covers the design, fabrication, experimental design verification, manufacture and delivery of 20 fiberglass and 20 PRD-49 Type III three-inch diameter composite rocket motor cases for application to SMAWT (Short Range Man Portable Anti-Tank Weapons Technology). Both motor case designs had open aft ends to permit propellant to be cast and case bonded to the case wall or the insertion and bonding of a cartridge-loaded grain.

DD FORM 1 NOV 65 1473

UNCLASSIFIED

Security Classification

14. KEY WORDS	LINK A ROLE	LINK A WT	LINK B ROLE	LINK B WT	LINK C ROLE	LINK C WT
Composite rocket motor cases						
Filament-winding						
PRD-49 fiber						
S904 fiberglass						
SMAWT (Short Range Man Portable Anti-Tank Weapons Technology)						

APPENDIX B

ADVANCED MATERIAL DESIGN DISCLOSURE

B-1. Design Calculations

B-2. Case Sketches

B-3. Tooling Sketches

B-4. Manufacturing and Inspection Records

APPENDIX B-1

DESIGN CALCULATIONS

PREPARED BY: T. White	HERCULES INCORPORATED	PAGE NO 1 OF
DATE: 5-31-72	SYSTEMS GROUP	REF. NO.
CHECKED BY:	PLANT:	

TITLE: Composite Motor Case - PRD Configuration

Design Parameters

$b_w = .156$

$P_{design} = 11{,}400$ psi

$\frac{P_{design}}{1.5} = 7600$ psi

$R_i = 1.367$ in.

$r_t = .961$ in.

$A_t = 2.9013$ in.^{2}

$r_{exit} = 1.473$ in

$A_{exit} = 6.818$ in

$\epsilon = 2.35$

$\alpha = 15°$

For $\gamma = 1.14$

sea level conditions

$C_F = 1.4778$

Thrust = 32,585 lb @ $p = 1600$

Forward Dome

Revise $\alpha = 17.7°$

2.7 circuits/layer

Centerport Opening - 1/4 NPT

$r_{rev.} = .24 + 12$

$r_{rev} = .36$

$R_{eqtr} \cong 1.390$

$\sin\alpha = \frac{.36}{1.39} = .2590$

$\alpha = 15°$

HER. 18531 REV. 1-71 100 PADS A-6018 (3-68)

PREPARED BY: T. White	HERCULES INCORPORATED	PAGE NO 2 OF
DATE: 5-31-72	SYSTEMS GROUP	REF NO.
CHECKED BY:	PLANT:	
TITLE:		

for $\alpha = 15°$

$\sin^2\alpha = .0670$

$\cos^2\alpha = .9330$

$\tan^2\alpha = .0718 \qquad 1 - \frac{1}{2}\tan^2\alpha = .9641$

$N_\phi = 7792 = n_\alpha \; (685 \times 10^{-5})(2.88 \times 10^{6})(.933)$

$= 1972.8\,(.933)\; n_\alpha$

$= 1840.6 \; n_\alpha$

$n_\alpha = 4.23$ layers

Assume 4 helical layers in forward dome; $f_\alpha = 304,360$

For static firing

Thrust = 32,200

$J = .70$

For hydrotest

$J = \frac{2.713}{6.07} = .478$

$1 - J \quad .522$

$N_{\phi_{cyl.}} = .522(7792) = 4067$ lb/in $\qquad$ Assume $n_\alpha = 3.0$ layers

Helical layers required in cyl. section $\quad f_\alpha = 212,121$

$n_\alpha = \frac{4067(4.23)}{7792} = 2.21$ layers

HER 1898 REV. 1-71 100 PADS A 6018 (5-28)

PREPARED BY: T. White	HERCULES INCORPORATED	PAGE NO. 3 OF
DATE: 5-31-72	SYSTEMS GROUP	REF. NO.
CHECKED BY:	PLANT:	
TITLE:		

Hoop layers required

for $n_\alpha = 3.0$
and hydrotest condition
$n_\alpha N T_\theta \sin^2\alpha = 292$

$$n_\theta = \frac{N_\theta}{N_{90} T_\theta}\left(1 - \tfrac{1}{2}\tan^2\alpha\right)$$

$$N_\theta = pR = 11400(1.39)$$
$$= 15{,}846$$

$$N_{90} T_\theta = .00685(320{,}000)$$
$$= 2192$$

$$n_\theta = \frac{15{,}846(.9641)}{2192} \qquad n_\theta = \frac{15846 - 292}{2192}$$

$$n_\theta = 6.97 \text{ layers} \qquad n_{\theta_{req'd}} = 7.10 \text{ layers}$$

Assume $n_\theta = 7.0$ layers @ 90°

In cylindrical section:

3 layers @ 15° $\quad t_\alpha = .036$

7 layers @ 90° $\quad t_\theta = .070$

$t_c = .106$

$\bar{R} = 1.367 + .053$
$= 1.420$

HER. 1 681 REV. 1-71 100 PADS

PREPARED BY: T. White	HERCULES INCORPORATED SYSTEMS GROUP	PAGE NO 4 OF
DATE: 5-31-72		REF. NO.
CHECKED BY:	PLANT:	
TITLE:		

In cylinder

$R_o = 1.3674 \cdot .106$

$= 1.473$ in.

O.D. = 3.946 in.

max $R_o = \frac{3.150}{2} = 1.575$

$t_{max} = 1.575 - 1.367$

$= .208$ in.

Nozzle Retention.

During hydrotest:

$F_{aft\ nozzle} = 11{,}400\,\pi\,(1.869 - .923)$

$= 35{,}814\,(.946)$

$= 33{,}880$ lb.

$circ_{ret.} = 8.559$ in.

$F/in = \frac{33{,}880}{8.559} = 3{,}944$ lb/in

Using a steel retaining ring

$S_{allow} = 95{,}000$

$t_{shear} = \frac{3944}{95{,}000} = .642$ in

for bearing strength = 40,000 psi in composite

$\Delta R_{reqd} = \frac{3{,}944}{40{,}000} = .099$ in.

using 36 ~.125 in dia. pins.

$A_{pin} = .01227 in^2$

for 36 pins

$A_{Total} = 36(.01227)$

$= .4417 in^2$

$\sigma = \frac{33,880}{.4417} = 76,704 psi$

in bearing

$A_{br} = .125(.20)$

$= .025$

Total $A_{br} = 36(.025)$

$= .9 in^2$

$36(.125) = 4.50 in.$

circ. = 8.589

spacing $= \frac{8.589 - 4.5}{36} = .114 in.$

$\sigma_{br\,comp} = \frac{33,880}{.9} = 37,644 psi$

Tension in material between pins

$\sigma_T = \frac{33,880}{4.089(.2)} = \frac{33,880}{.8178} = 41,428 psi$

Force on Forward Shield

During hydrotest,

$F = 11,901(2.9013) = 33,075 lb.$

During static firing;

$F = 1.5(33,301) = 49,950$

HER. 18581 REV. 1-71 100 PADS

A 0018 (5-68)

PREPARED BY: T. White	HERCULES INCORPORATED	PAGE NO 6 OF
DATE: 5-31-72	SYSTEMS GROUP	REF. NO.
CHECKED BY:	PLANT:	
TITLE:		

$2\pi \bar{R} \cong 9.217$ 9.324

$F/in = 3581$ lb/in Hydrotest 3547

$T = 19,489$

$= 5256$ lb/in Static Firing $R_s = 1.57$

For $F_c = 30,000$

$t = .175$

Winding Sequence

X O M O X O O X O O O

Forward Dome Contour

$R_i = 1.367$ in

$t_\alpha = .048$ in. (including mat) $Z = \frac{.048}{2.782} = .01725$

$\bar{R}_{dome} = 1.391$ in.

$\alpha = 15^0$

x	y	t'	$\bar{R}$	Y	$t_\alpha/2$	R_i	Y	t
1.0	0	4.00	1.3910	0	.024	1.367	0	
.94	.24311	4.276	1.3075	.3382	.0257	1.360	.1	
.88	.33528	4.594	1.2241	.4664	.0276	1.336	.2	
.82	.40015	4.966	1.1406	.5566	.0298	1.275	.3	
.76	.4499	5.4[illegible]7	1.0572	.6259	.0324	1.237	.4	.055
.70	.48942	5.941	.9737	.6808	.0356	1.158	.5	.058
.64	.52129	6.601	.8902	.7251	.0396	1.039	.6	.066
.58	.54712	7.444	.8068	.7610	.0447	.848	.7	.082
.52	.56803	8.567	.7233	.7901	.0514	.710	.74	.104
.46	.58489	10.160	.6399	.8136	.0610	.520	.76	.200
.40	.59843	12.669	.5564	.8324	.0760	.238	.764	.300
.34	.60940	17.524	.4729	.8477	.1051			
.31117	.61457	2[illegible]	.4328	.8542	.1342			

Forward part thread strength

$F_{plug} = 11{,}400\,\pi\,(.2607)^2$

$= 11{,}400\,(.2138)$

$F = 2{,}437$ lb.

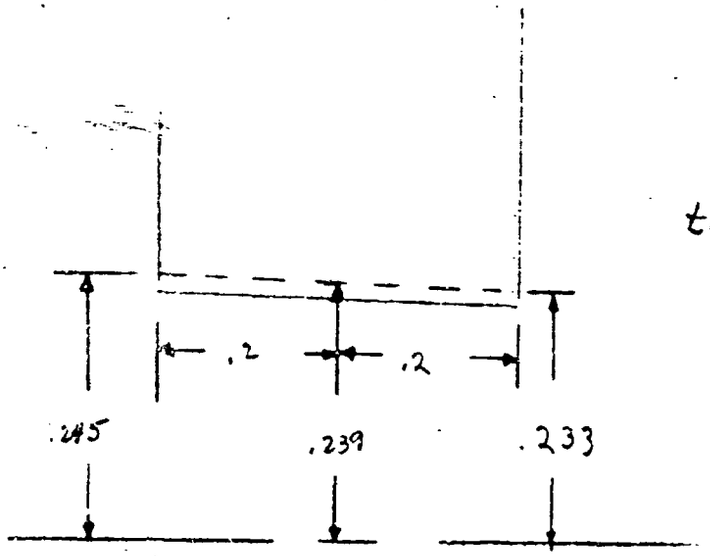

$\tan\phi = \frac{.245-.239}{.2}$

$= \frac{.006}{.2}$

$= .0300$

$\phi = 1°43'$

for 18 threads/inch

1 thread = .0555 in

F-G = .2387 − .2165

= .0222

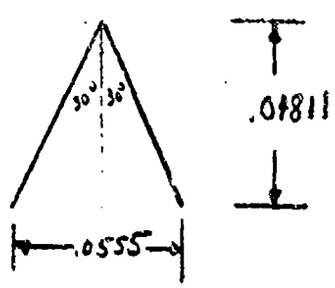

$\tan 30° = \frac{X}{.04811}$

$X = .04811\,(.57735)$

$= .02778$

$2X = .0555$

Assume $\bar{R} = .237$

$2\pi\bar{R} = 1.489$

for $t = .300$ in

No. threads $= \frac{.300}{.0555} = 5.40$ threads

HER. 18281 REV. 1-71 100 PADS A-6018 (5-69)

PREPARED BY: T. White	HERCULES INCORPORATED	PAGE NO 8 OF
DATE: 5 31-72	SYSTEMS GROUP	REF NO.
CHECKED BY:	PLANT:	
TITLE:		

$$A_{shear} = 1.477(5.4)(.024)$$

$$= .173$$

$$\tau = \frac{2437}{.173} = 12,627 \text{ psi}$$

Pin Spacing

single row

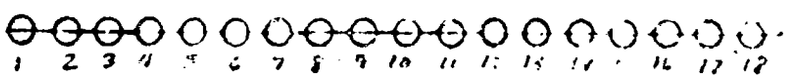

double row

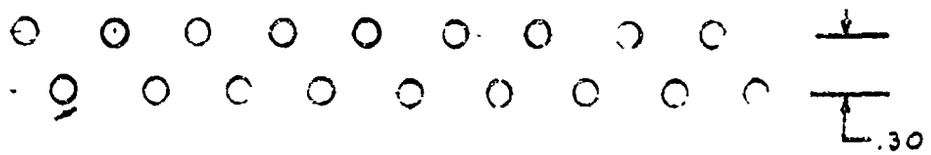

HER 9981 REV 1 71 100 PADS A-8018 (5-66)

PREPARED BY: T. White	HERCULES INCORPORATED	PAGE NO 9 OF
DATE: 6-5-72	SYSTEMS GROUP	REF NO.
CHECKED BY:	PLANT:	
TITLE:		

Weight Estimate

Forward Dome: $\alpha = 15^\circ$ $Z = .01725$

Shell Vol. $= .275 \times \frac{.01725}{.02} \times (1.39)^3 \times 2\pi (.338)(.194 \times .27)$

$= .2372(2.692) + 2.124(.0524)$

$= .6385 + .1113$

Shell Vol. $= .7498$

for $\rho_c = .048$ lb/in^3

$Wt_{dome} = .75(.048)$

$wt_{dome} = .036$ lb.

Basic Cylinder:

$\ell = 6.86$

$t = .106$

$\bar{R} = 1.367 + .053$

$= 1.42$

$2\pi\bar{R} = 8.922$

$Vol_{shell} = 2\pi\bar{R}\, t\, \ell$

$= 8.922(.106)(6.86) = 6.488$

wt. $= 6.488(.048) = .311$ lb.

Aft Skirt $t = .102$

$\bar{R} = 1.575 - .051 = 1.524$

wt $= 9.576(.1425)(.048) = .066$ lb.

HER. 18281 REV. 1-71 100 PAGE A 5018 (5-66)

PREPARED BY: T. White	HERCULES INCORPORATED SYSTEMS GROUP	PAGE NO. 10 OF
DATE: 6-5-72		REF. NO.
CHECKED BY:	PLANT:	
TITLE:		

Fwd skirt. $t = .175$

$2\pi r = 9.217$

$\ell = 1.94$

$wt = 9.217(.34)(.04)$

$= .150 lb.$

$wt_{PRD\,comp.} = .036 + .311 + .066 + .150$

$= .563 lb.$

wt of pins (36)

$A_{pin} = .01227$

$\ell_{pin} = .42$

$Vol_{pin} = .0051 in^3$

for 36 pins = .1854

$wt_{pins} = .1854(.284) = .054 lb.$

$wt_{nozzle} = .275 lb.$

Comp.	Wt.-lb.
chamber	.563
nozzle	.2754
pins	.1854
	1.0238 lb.

HER 10501 A-6018 (5-68)

PREPARED BY: T. White	HERCULES INCORPORATED	PAGE NO 11 OF
DATE: 6-22-72	CHEMICAL PROPULSION DIVISION	REF NO.
CHECKED BY:	PLANT:	
TITLE:		

Weight Estimate for Fiberglass Nozzle

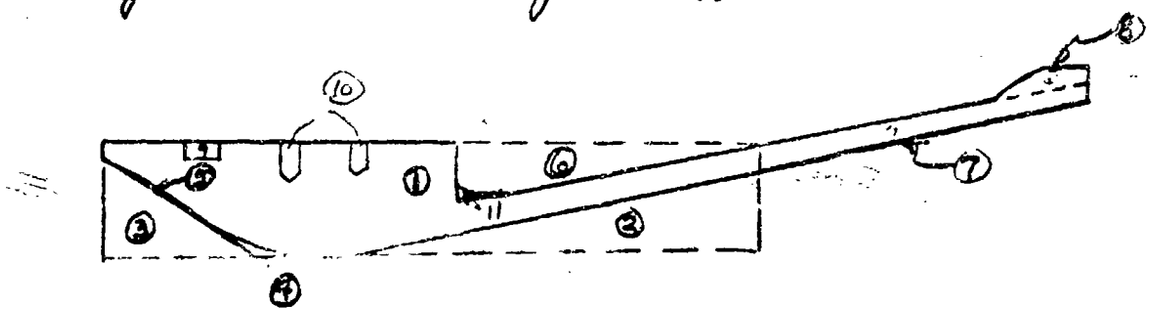

Section	R_i	R_o	b	h	$\bar{R}$	A	$\bar{R}A$	wt.
1	.961	1.3655	2.427	.4045	1.16325	.98172	+1.1420	+.5023
2	.961	1.320	1.411	.359	1.0807	-.25327	-.2737	-.1204
3	.961	1.340	.53	.379	1.0873	-.10044	-.1092	-.0480
4	-	-	.316	.054	.987	-.00853	-.0084	-.0037
5	-	-	.28	.012	1.260	-.00168	-.0021	-.0009
6	-	1.3655	1.027	.256	1.2802	-.13146	-.1683	-.0740
7	-	-	.592	.048	1.424	+.0284	+.0404	+.0178
8			.336	.092	1.520	+.0309	+.0470	+.0207
9	1.2455	1.3655	.235	.120	1.3055	-.02820	-.0368	-.0162
10	-	-	-	-	-	-	-	-.0083
11	-	-	.270	.044	1.172	+.0119	+.0139	+.0061
								+.2754

Assume $\rho = .070$

$2\pi\rho = .439824$

(36) holes: dia = .125

depth = .268

$Vol_{hole} = \pi/6 (.125)^2 (.268)$

$= .2105 (.0156)$

$= .003284$

$wt_{36\ holes} = 36(.07)(.003284)$

$= .0083$

HER. 10531 REV. 1-71 100 PADS

PREPARED BY: T. White	HERCULES INCORPORATED SYSTEMS GROUP	PAGE NO 1 OF
DATE: 10-30-72		REF NO
CHECKED BY:	PLANT:	
TITLE:		

SMAWT PRD Case Stresses

Centerport Plug Retention - PRD threaded joint

@ $p = 11{,}400$ psi

$F = 2{,}437$ lb.

Assuming:

5.40 threads engaged (.300 in. thick boss)

effective thread width = 0.024 in. (mean thread thick.)

$\tau = 12{,}627$ psi.

Forward Skirt:

Ultimate Compressive load

Hydrotest: $F = -33{,}075$ lb. $F/in = 3588$ lb/in

Static Firing: $F = -48{,}450$ lb $F/in = 5256$ lb/in

Skirt thickness = 0.182 in

Ultimate Compressive Stress

Hydrotest: $\sigma = 19{,}714$ psi M.S. = +.52

Static Firing: $\sigma = 28{,}879$ psi M.S. = +.04

Ultimate Average Shear Stress at Joint

$\ell_{shear} = 1.4$ in.

Hydrotest: $\tau = 2{,}563$ psi

Static Firing: $\tau = 3{,}754$ psi

HER. 18581 REV. 1-71 100 PAGE A-8018 (5-68)

PREPARED BY: T. White	HERCULES INCORPORATED SYSTEMS GROUP	PAGE NO. 2 OF
DATE: 10-30-72		REF. NO.
CHECKED BY:	PLANT:	
TITLE:		

Nozzle to Chamber Joint: 36 - 1/8" pins.

Ult. Axial Force:

During Hydrotest: $F = 35,880$ lb $F/in = 3,944$ lb/in

static Firing: $F = 24,878$ lb. $F/in \approx 2,896$ lb/in

Bearing Stress During ultimate Hydrotest:

in Chamber: $\sigma_{br} = 37,644$ psi

in Nozzle: $\sigma_{br} \cong 37,644$ psi

Tensile stress in chamber between pins:

$\sigma_T = 41,428$ psi.

Shear stress in pins (average)

$J = 76,704$ psi.

Case-in-case Design

Adhesive Shear Stresses

Ave. $J = 1,332$ psi

Fwd edge Peak $J = 12,432$ psi ($K = 9.3$)

Aft edge peak $J = 1,664$ psi ($K = 2.0$)

HER. 18281 REV. 1-71 100 PADS A-5019 (5-66)

PREPARED BY: T. White	HERCULES INCORPORATED SYSTEMS GROUP	PAGE NO 1 OF
DATE: 11-16-72		REF. NO.
CHECKED BY:	PLANT:	
TITLE:		

LAW PRE Case Design Change.

Failure of the joint initiates at p = 6500 psi

Total failure @ p = 8535 psi

Force on nozzle during hydrotest:

$$F = p\pi\left[(1.367)^2 - (.961)^2\right]$$

$$= 11{,}400 \times (1.869 - .923)$$

$$= 11400\,(2.972)$$

$F = 33{,}881$ lb. @ ultimate pressure

Using 36 retaining pins length of pin = .500

F/pin = 941.18 lb/in.

$d_{in.\,pin} = .125$

Basic pressure vessel geometry:

7 layers @ 90°
3 layers @ 17.7° } t = .106 in.

Additional attachment [illegible]

6 layers [illegible]
3 layers @ 10° } t = .102

[illegible] in.

HER 10881 REV 1-71 100 PADS A-6018 (5-66)

PREPARED BY: T. White	HERCULES INCORPORATED	PAGE NO 2 OF
DATE: 11-16-72	SYSTEMS GROUP	REF NO
CHECKED BY:	PLANT:	
TITLE:		

for $t = .208$

$A_{br} = .125(.208) = .026$

$\sigma_{br} = \frac{941.14}{.026} = 36,198$ psi.

$F = 22,000$ lb capability on uniaxial test

equiv $p_c = \frac{22000}{2.972} = 7,402$ psi

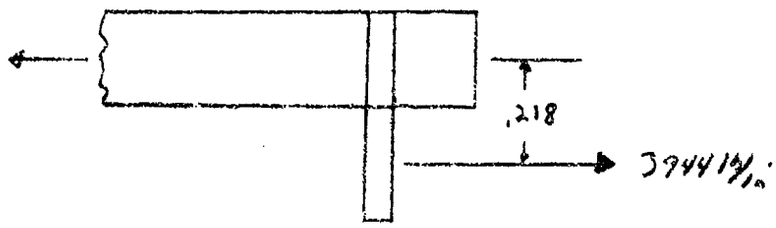

$M \cong 3944(.218) = 860$ in lb/in

$f_t = \frac{6M}{t^2} = \frac{6(860)}{(.208)^2} = \frac{5160}{.043264} = 119,268$ psi

Allowable Compressive Strengths

all glass cloth 31,000

all 90° windings 21,000

all 15° windings 54,000

Skirt $R_o = 1.575$

$\bar{R} = 1.575 - .104 = .1471$

$2\pi R = 9.243$

for 18 - .125 dia pins $w = 2.25$

eff circ. = 9.243 - 2.25 = 6.993 in

HER. 16881 REV. 1-71 100 PADS A-6018 (5-69)

PREPARED BY: T. White	HERCULES INCORPORATED SYSTEMS GROUP	PAGE NO. 3 OF
DATE: 11-17-72		REF NO.
CHECKED BY:	PLANT:	
TITLE:		

Tensile stress between pins

$$\sigma = \frac{F}{t \times \text{[illegible]}} = \frac{338[illegible]}{.208\,(6.993)} = \frac{[illegible]}{1.454}$$

$\sigma_T = 23,[illegible]$ psi

Recommend substituting [illegible] S 34-[illegible] glass cloth in place of PRD cloth in ratio's (with [illegible] in axial direction)

1 layer cloth to [illegible] hoop layer

2 layers cloth to one hoop layer

For design 1:

	p.d.	[illegible]	[illegible]
at fwd end:	XOXOXOXO	[illegible] CHCHCHCH	[illegible] CO
at aft end:	XOXOXOXO	——	[illegible] OCO

For design 2:

at fwd end	XOXOXOXO	[illegible]	CCOCCOCCO
at aft end	XOXOXOXO	——	[illegible]

Wind sufficient material to assure machined diameter of [illegible] at fwd and aft ends.

PREPARED BY: T. White	HERCULES INCORPORATED CHEMICAL PROPULSION DIVISION	PAGE NO 1 OF
DATE: 6-21-72		REF. NO.
CHECKED BY:	PLANT:	

TITLE: LAW II - Nozzle for PRD Case

Nozzle Composite Thickness Estimate

at aft equator; $K_i' = 1.432$

$n_\alpha = 4.0$ layers @ $42°$

$t_\alpha = .046$

$\bar{R}_{eqtr} = 1.432 + .023$

$= 1.455$

$\bar{R}\sin\alpha = 1.455(.66913)$ $\quad + \bar{R}\cos\alpha = 1.455(.74314)(.046)$

$= .97358$ $\quad = .0497$

at throat; $K_i' = .961$

$\alpha = 65°$

$$t \cong \frac{.046(1.432)(.74314)}{.961(.4226)} = \frac{.0490}{.4061}$$

$t \cong .1207$

$\bar{R} = .961 + .06 = 1.021$

$$t = \frac{.049}{.9315} = .114$$

$\bar{R} = .961 + .057 = 1.018$

$$t = \frac{.049}{.4302} = .114$$

$\sin\alpha_{prod} = \frac{.972}{1.018} = .9564$

$\alpha_{prod} = 73°21'$

HER. 19581

A 9018 15 66

PREPARED BY: T. White	HERCULES INCORPORATED CHEMICAL PROPULSION DIVISION	PAGE NO 2 OF
DATE:		REF NO
CHECKED BY:	PLANT:	
TITLE:		

At equator $\bar{R} = 1.455$ $\bar{R}\cos 42° = 1.0[illegible]$

$R_i = 1.432$ $\bar{R}\sin 42° = .9736$

$t = .046$

At throat $\bar{R} = 1.018$ $\bar{R}\cos 65° = .4302$

$R_i = .961$ $\bar{R}\sin 65° = .9226$

$t = .114$

$\bar{R}$	$\frac{\bar{R}}{R_{eqtr}}$	$\frac{R_{eqtr}\sin\alpha_{eq}}{\bar{R}}$	α_{good}	$1.455 - \bar{R}$	δ	δ	α_{actual}
1.018	.6997	.9564	73°2'	.437	8.033°	8°2'	65°
1.050	.7216	.9272	68°	.405	7.445	7°27'	60°33'
1.10	.7560	.8851	62°16'	.355	6.526	6°32'	55°44'
1.15	.7904	.8466	57°51'	.305	5.607	5°36'	52°15'
1.20	.8247	.8113	54°13'	.255	4.6[illegible]	4°41'	49°32'
1.25	.8591	.7789	51°10'	.20[illegible]	3.769	3°46'	47°24'
1.30	.8935	.7489	48°30'	.15[illegible]	[illegible]	[illegible]	45°39'
1.35	.9278	.7212	46°9'	.105	1.93[illegible]	1°56'	44°13'
1.40	.9222	.6954	44°4'	.055	1.011	1°7'	42°57'
1.455	1.0	.66914	42°	0		0	42°

$\bar{R}\sin\alpha_{good} = R_{eqt}\sin 42$

$\sin\alpha_{good} = \frac{R_{eqt}}{\bar{R}}\sin 42 = \frac{.9736}{\bar{R}}$

$\delta_T = 73°2' - 65°$

$= 8°$

$\Delta R = 1.455 - 1.018 = .437$

$\delta = \frac{1.455 - \bar{R}}{.437} \times 8.0333$

$= 18.383(1.455 - \bar{R})$

Best Available Copy

PREPARED BY: T. White	HERCULES INCORPORATED	PAGE NO. 3 OF
DATE:	CHEMICAL PROPULSION DIVISION	REF. NO.
CHECKED BY:	PLANT:	
TITLE:		

$\bar{R}$	$\cos\alpha$	$\bar{R}\cos\alpha$	t_A	$5\bar{R}$	$5\left(\frac{t_A}{2}\right)$
1.018	.4226	.4302	.1155	5.090	.289
1.050	.4917	.5163	.0963	5.250	.241
1.10	.5630	.6193	.0803	5.50	.201
1.15	.6122	.7040	.0706	5.75	.177
1.20	.649	.7788	.0638	6.00	.160
1.25	.6769	.8461	.0587	6.25	.147
1.30	.6990	.9087	.0547	6.50	.137
1.35	.7167	.9675	.0514	6.75	.129
1.40	.7320	1.0248	.0485	7.00	.121
1.45	.7431	1.0812	.0460	7.275	.115

$$t = \frac{.0497}{\bar{R}\cos\alpha}$$

HER. 18501 REV. 1-71 100 PADS

PREPARED BY: T. White	HERCULES INCORPORATED SYSTEMS GROUP	PAGE NO. 1 OF
DATE: 8-14-73		REF. NO.
CHECKED BY:	PLANT:	
TITLE:		

LAW II Forward Skirt Analysis

$R_i = 1.417$

$R_o = 1.500$

$t_c = .083$

Geometry: X C X D O X O

$t_d = .035$

$t_o = .045$

$t_c = .083$

for $t_c = .065$

$\bar{R} = 1.417 + .042$

$= 1.459$ in

$2\pi\bar{R} = 9.167$ in

$2\pi\bar{R}t = .7609$

$\bar{R} = 1.449$

$2\pi R t = .5918$ in²

@ $p = 5950$ psi

$\sigma_{comp} = 27,197$ psi

$A_T = 2.901$

$A_{piston} = .196$

$A_{Force} = 2.705$ in²

@ $p = 7000$ psi

$F_{skirt} = 7000(2.705)$ 5950(2.705)

$= 18,935$ lb. 16,095

@ $p = 11,400$

$F = 11,400(2.705)$ 11,400(2.901)

$= 30,837$ lb. 33,071 lb.

$\sigma_{br} = \frac{18,935}{.7609}$

$= 24,885$ psi 21,152

$\sigma_{br} = 40,527$ psi.

$t_\phi = \frac{24,885}{1.952 \times 10^6} = .0129$ .0109

PREPARED BY: T. White	HERCULES INCORPORATED	PAGE NO. 2 OF
DATE: 8-14-72	SYSTEMS GROUP	REF. NO.
CHECKED BY:	PLANT:	
TITLE:		

Rohm & Haas LAW units

$R_i = 1.222$
$R_o = 1.310$

$t_c = .088$

$\bar{R} = 1.222 + .044$
$\bar{R} = 1.266$
$2\pi\bar{R} = 7.955$
$2\pi\bar{R}t = .700$

Static Fire $F_{ult} = 31,890$ lb. $\sigma_{br} = 45,557$ psi.

Hydrotest $A_{piston} = .4418$

@ $p = 13,850$
$F = 6,119$ lb.

@ $p = 20,000$
$F = 8,836$ lb.

$\sigma_{br} = 8,741$ psi

HER. 10881 REV. 1-71 100 PADS A-6010 (8-68)

PREPARED BY: T. White	HERCULES INCORPORATED SYSTEMS GROUP	PAGE NO. 3 OF
DATE: 8-14-72		REF. NO.
CHECKED BY:	PLANT:	

TITLE: LAW II Forward Skirt Analysis

For 3 layers @ 42°

5 layers @ 10°

	$\alpha = 90°$	$\alpha = 42°$	Comp.
n	5	3	8
t	.048	.035	.083
$C_{\theta\theta}$	7.945	2.469	5.619
$C_{\phi\phi}$	1.452	3.070	2.105
$C_{\theta\phi}$	.380	1.820	.981
$C_{\theta\gamma}$	.555	1.939	1.139
ω_r	.24	.28	

$R_i = 1.417$ $\quad E_\theta = 5.156 \times 10^6$

$\bar{R} = 1.459$ $\quad E_\phi = 1.932 \times 10^6$

$\nu_{\theta\phi} = .469$

$\nu_{\phi\theta} \quad .176$

$\sigma_{cr_{buckling}} = 104{,}240$ psi.

Lamina Compressive Strength

0°	173,000
90°	29,000

Bearing Strength for 0°/45°/45°/0° = 53,100 - 66,700

0°/45°/45°/90° = 61,600 - 63,000

HER. 12801 REV. 1-71 100 PADS

A-6018 (5-68)

PREPARED BY: T. White	HERCULES INCORPORATED	PAGE NO. 4 OF
DATE: 8-15-72	SYSTEMS GROUP	REF. NO.
CHECKED BY:	PLANT:	
TITLE.		

Skirt Modification

$R_i = 1.417$

Assume $t = .065$ in.

Required increase in strength

$\frac{11,400}{7000} = 1.629$

$1.629(.065) = .106$

Add the following to existing skirt:

COCOCO

$t_{cloth} = .015$ /layer

$t = .045 + .030$

$= .075$

$t_{skirt} = .065 + .075$

$= .140$

$\bar{R} = 1.417 + .07$

$= 1.487$

$2\pi \bar{R} t = 1.308$

@ $p = 11,400$

$F = 30,837$ lb.

$\sigma_{comp} = 23,576$ psi

Actual $F = 37,900$ lb. in axial compression test

APPENDIX B-2

ADVANCED MATERIAL DESIGN CHAMBER AND NOZZLE

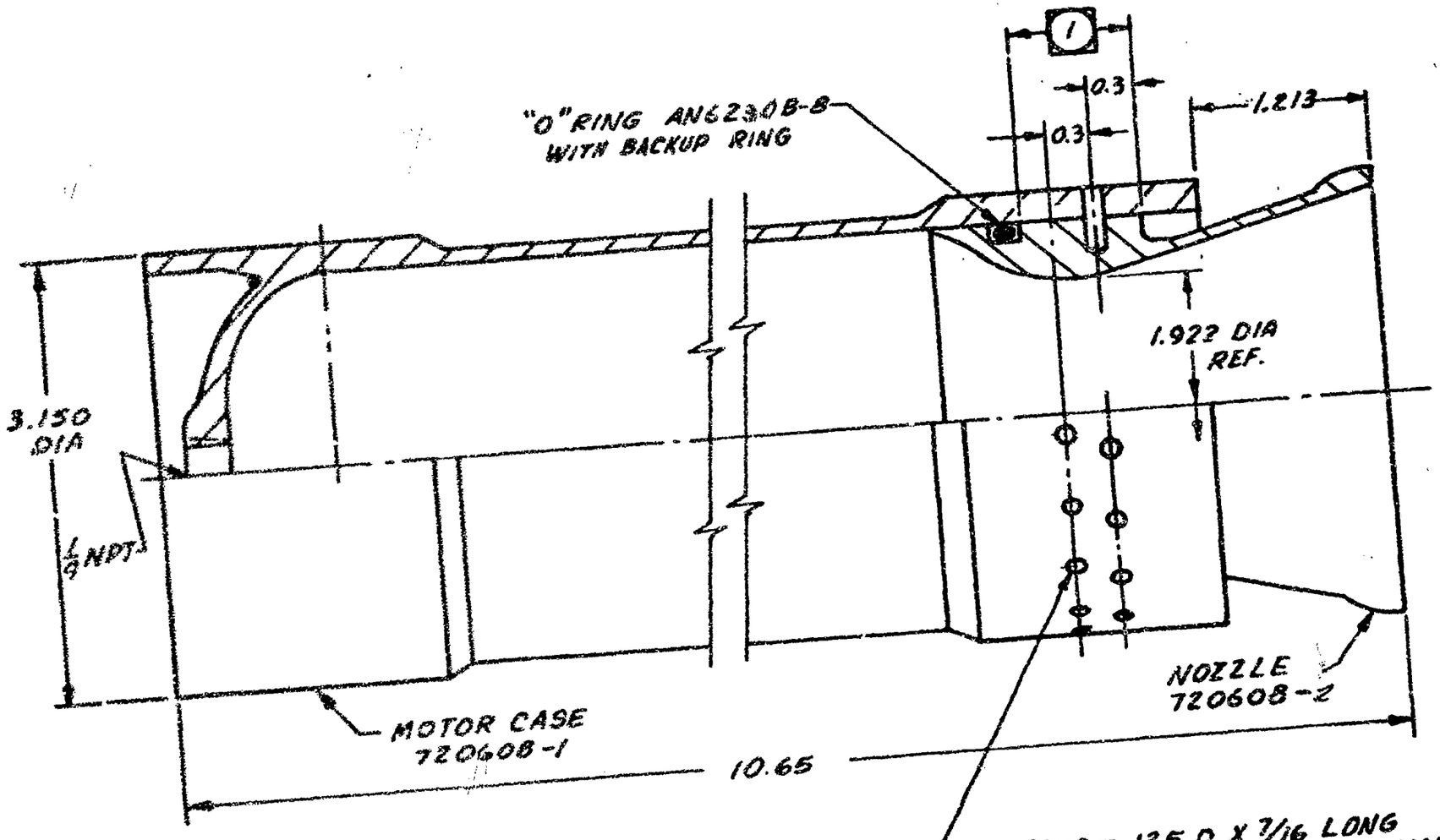

NOTE :

1 EPON 946, APPLIED TO NOZZLE SURFACE BY BRUSHING

MOTOR ASSEMBLY
1/1 SCALE
720608

DOME COORDINATES

R	Y
1.367	0
1.360	.10
1.336	.20
1.259	.30
1.237	.40
1.158	.50
1.059	.60
.848	.70
.710	.74
.520	.76
.238	.764

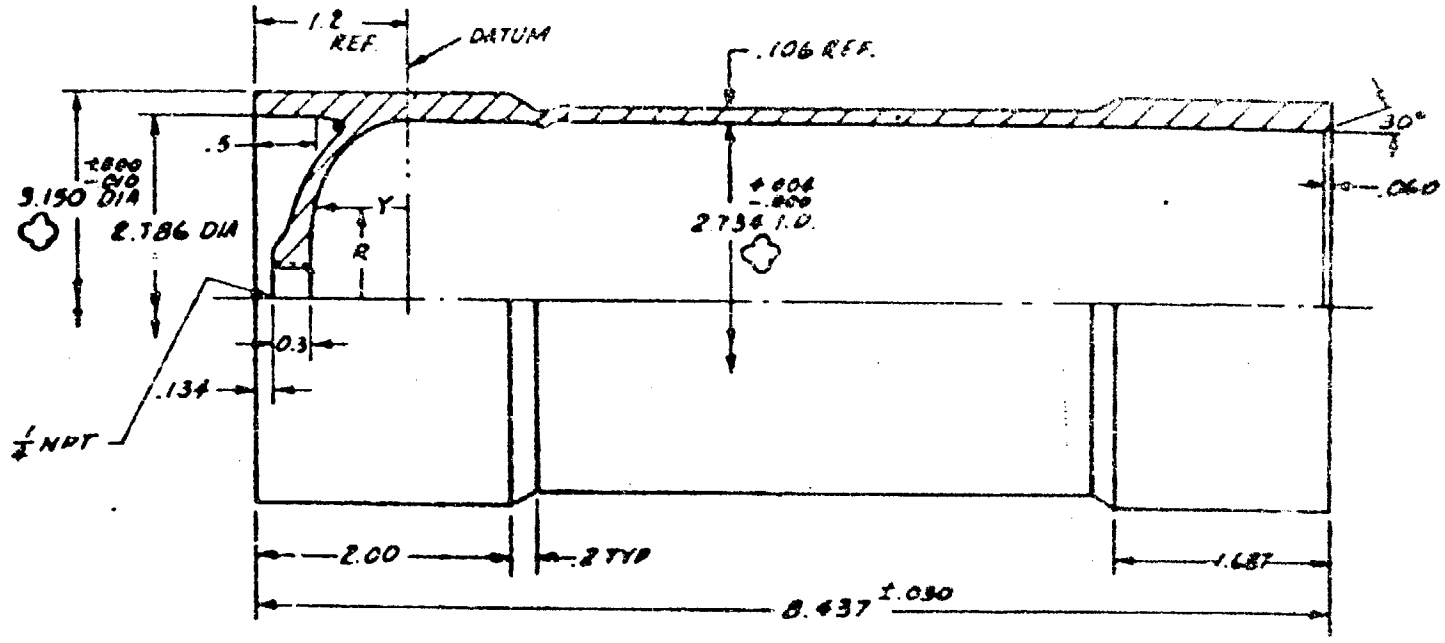

NOTES :

1. SYMBOL ✿ INDICATES RESULTS TO BE REPORTED BY FABRICATOR.
2. REPEAT TO ASSURE 3.150 MINIMUM DIAMETER AFTER MACHINING.
3. WINDING SEQUENCE

PRESSURE VESSEL X O X O X X O O O O

FORWARD SKIRT C H4C O C O C O C H{C H}

AFT DOUBLER X O C X O C X O C X O C O C O C O C H{C H} 2

X = HELICAL, 15°

O = HOOP

C = GLASS CLOTH

• = "O" RING

H4 FILL WITH HOOP AT O-RING, H = HOOP OVER SKIRT & DOUBLER

MATERIAL : DUPONT PRD-49 TYPE III, 12 END ROVING; ERL 2256 RESIN, UNION CARBIDE CORP., TONOX 6040, UNIROYAL CO.; FIBERGLASS CLOTH, S901-34, OWENS CORNING FIBERGLASS CORP.

MOTOR CASE

1/4 SCALE

120608

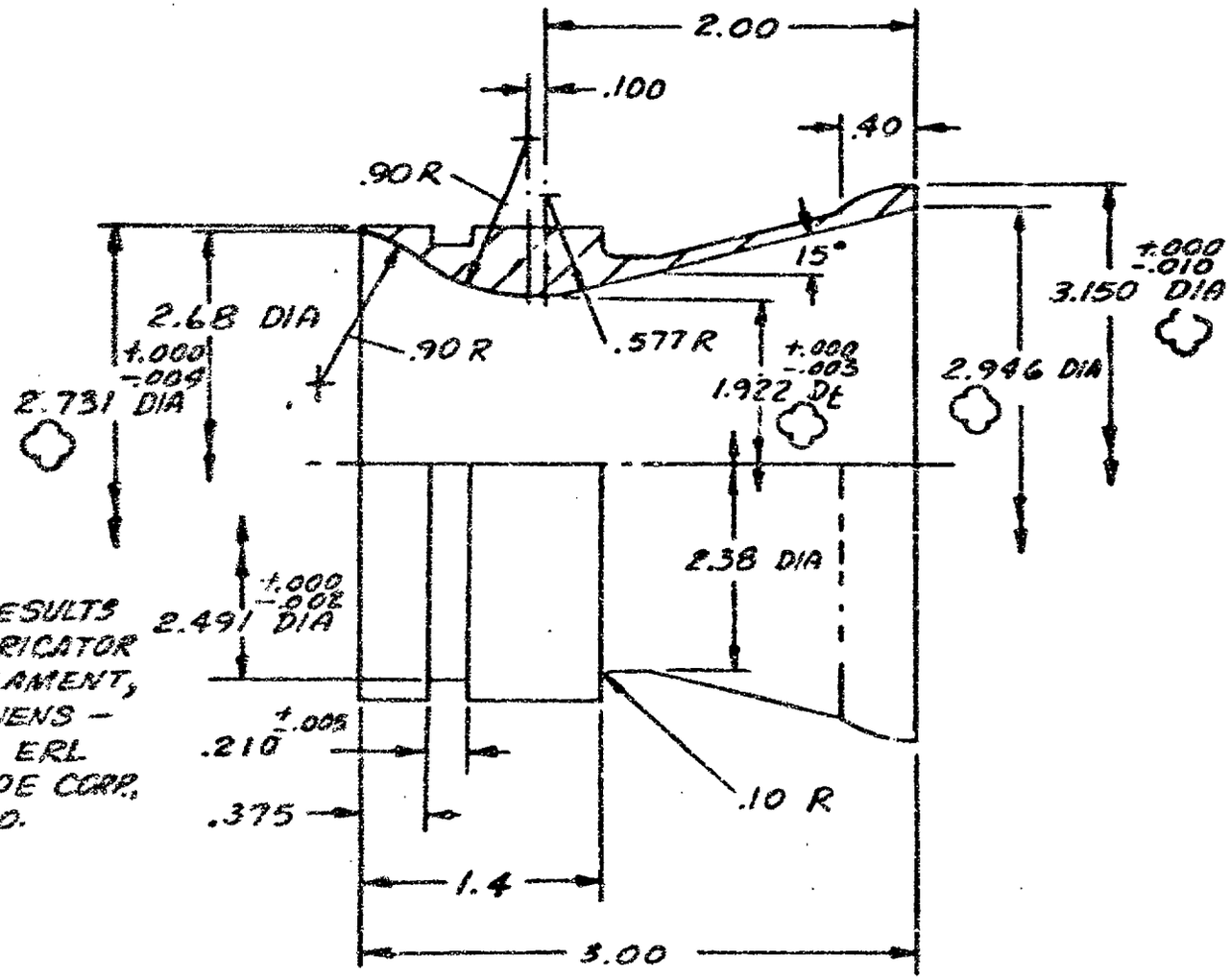

NOTES:

1. SYMBOL ✿ INDICATES RESULTS TO BE REPORTED BY FABRICATOR
2. MATERIAL: FIBERGLAS FILAMENT, S-901, 12 END ROVING, OWENS-CORNING FIBERGLAS CORP. ERL 2256 RESIN, UNION CARBIDE CORP. TONOX 6040, UNIROYAL CO.

NOZZLE
1/1 SCALE

720608-2

APPENDIX B-3

ADVANCED MATERIAL DESIGN TOOLING SKETCHES *

* N.B. Portions of the nozzle tooling are compatible with the CIC design presented in Appendix A-3.

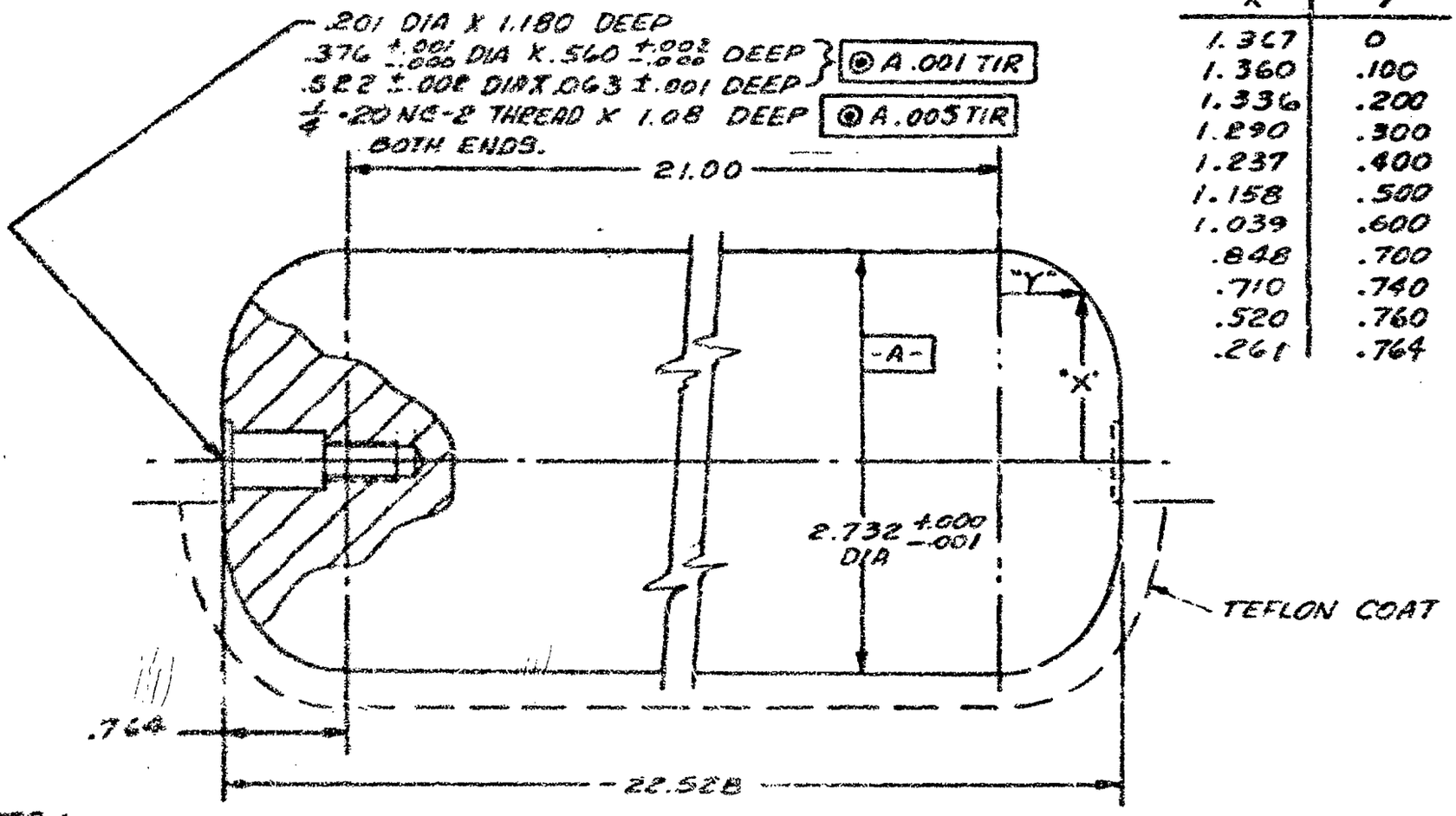

DOME COORDINATES.

X	Y
1.367	0
1.360	.100
1.336	.200
1.290	.300
1.237	.400
1.158	.500
1.039	.600
.848	.700
.710	.740
.520	.760
.261	.764

NOTES :

1. MATERIAL : 2024 T 351 ALUMINUM OR EQUAL.
2. REMOVE ALL BURRS AND SHARP EDGES, .005 MAX R.
3. SURFACE FINISH 32 ALL OVER.
4. DIMENSIONS TYPICAL FOR BOTH ENDS.
5. DIMENSIONS SHOWN ARE BEFORE TEFLON COATING.
6. GRIT BLAST AREA TO BE TEFLON COATED.
7. TEFLON COAT TO .001 MAX WHERE INDICATED.

PRD CASE MANDREL

f SCALE 720619-1

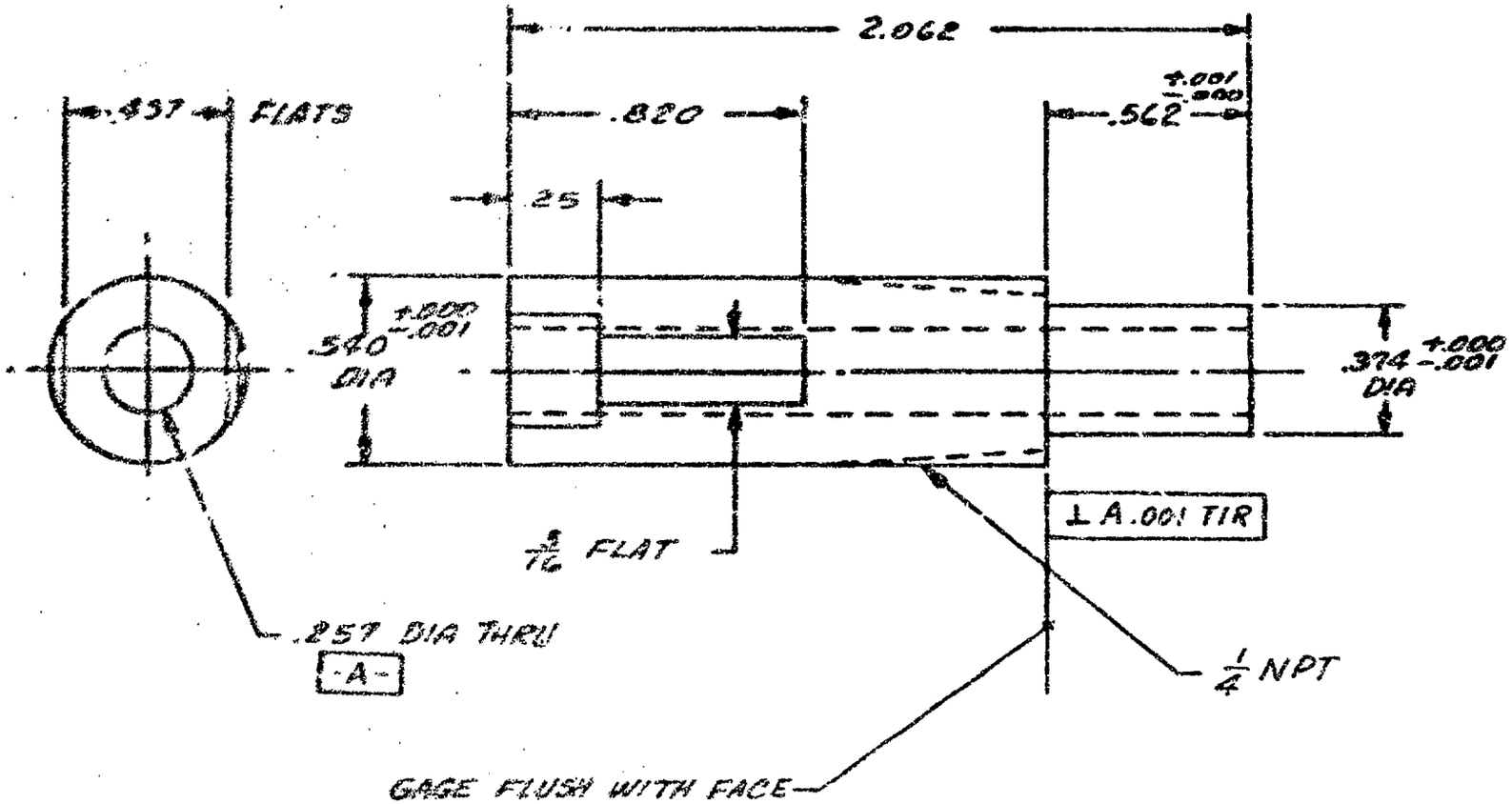

NOTES:

1. FINISH 63 √ ALL OVER.
2. MATERIAL: 305 STAINLESS STEEL, FREE MACHINING.
3. REMOVE ALL BURRS AND SHARP EDGES TO .005 R.
4. ALL DIAMETERS TO BE CONCENTRIC TO .257 DIA HOLE WITHIN .001 TIR EACH END.

PRD MANDREL ADAPTER
2 REQUIRED

2/1 SCALE 720619

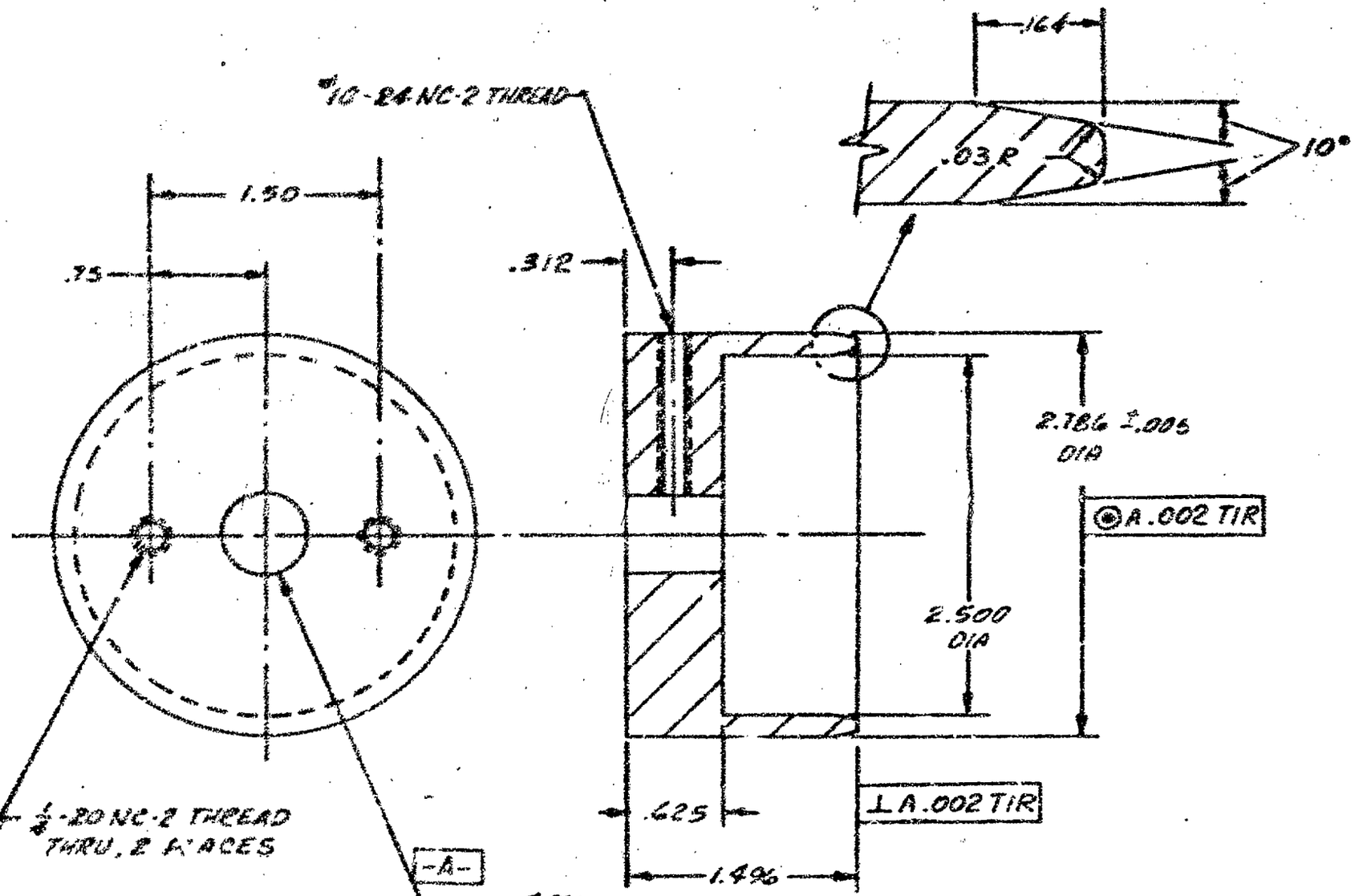

NOTES:
1. FINISH 63 √ ALL OVER
2. MATERIAL: 2024 T4 ALUM OR EQUAL.
3. REMOVE ALL BURRS AND SHARP EDEGES TO .010 R.

PRD SKIRT MANDREL
2-REQ'D

+ SCALE 720620-1

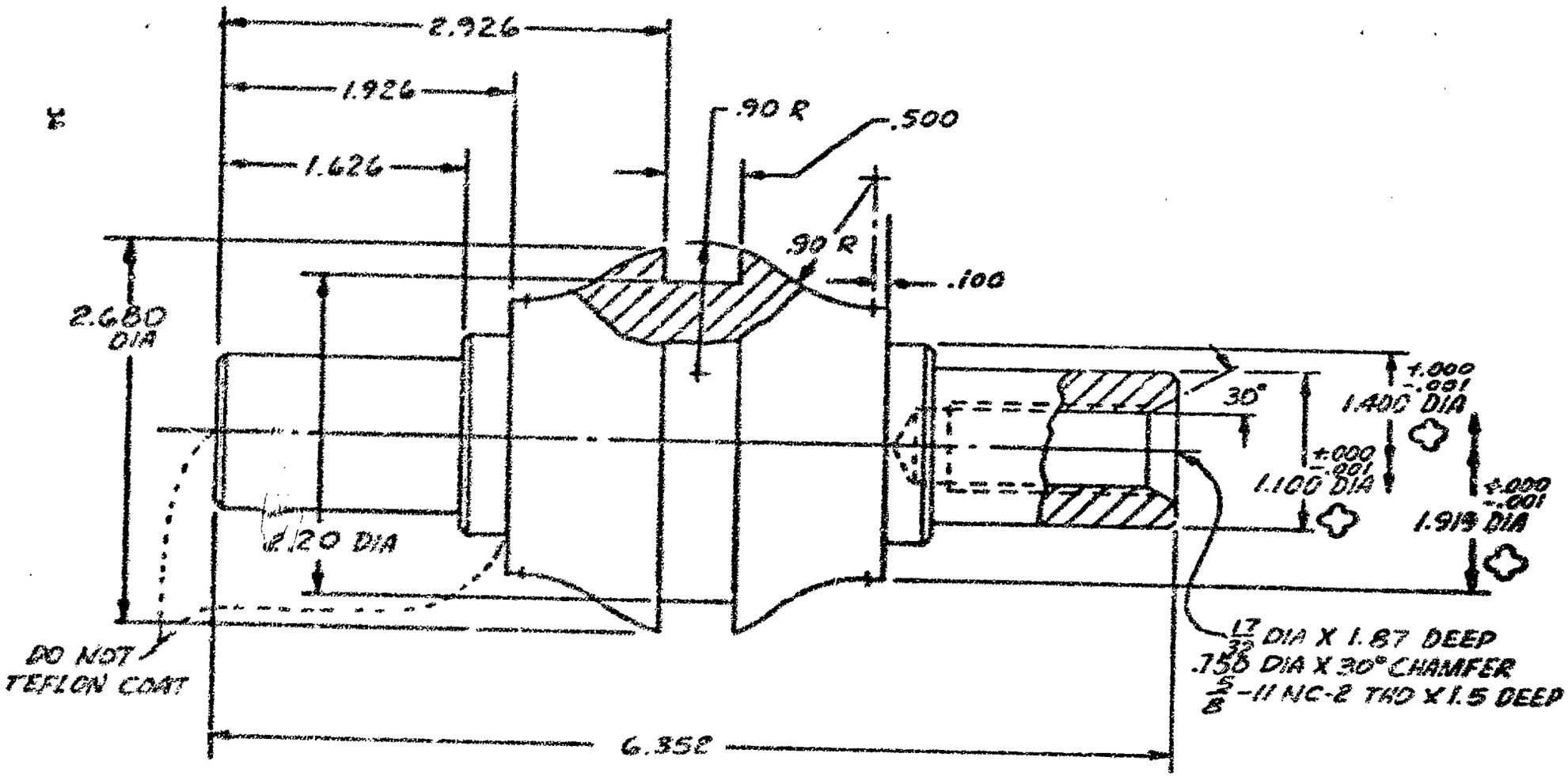

NOTES:

1. MATERIAL : 2024 T351 ALUMINUM OR EQUAL.
2. SURFACE FINISH 63 ALL OVER.
3. REMOVE ALL BURRS AND SHARP EDGES, .005 MAX. R.
4. ALL DIMENSIONS TYPICAL FOR BOTH ENDS.
5. ALL DIAMETERS TO BE CONCENTRIC .001 TIR WITH CENTERS.
6. DIMENSIONS SHOWN ARE BEFORE TEFLON COATING.
7. GRIT BLAST AREA TO BE TEFLON COATED.
8. TEFLON COAT TO .001 MAX. AS SHOWN.
9. SYMBOL ⬡ INDICATES RESULTS TO BE REPORTED BY FABRICATOR.

MANDREL BODY, NOZZLE

1/1 SCALE 720707

APPENDIX B-4

ADVANCED MATERIAL DESIGN MANUFACTURING AND INSPECTION RECORDS

ROGER DALE

Manufacturing & Inspection Record

3.0 Dia. x 5.05 lg. Motor Case

P.R.D. Shell Fabrication

Dwg. 720608-1

	Operator No.
1. Winding Preparation	
Machine set up installed. Level wind set to .312 lead.	149
Shaft extension T. I. R. .625.	832
O-rings, screws, adapters and holes waxed.	832
Mandrel cleaned properly	832
(2) O-rings assembled properly.	832
Roving (P.R.D., Type III, 12-end) installed. Lot No. _____.	
Roving tension: 1. 1 3/4 2. 2	832
2. Winding	
Resin mixed correctly:	832

	Ingredient	Weight, gms.	Lot No.	
Resin	2256	100	ABL-17	
Catalyst	tovex 60/40	29	ABL-7	832

2. Winding (cont.)

Operator No.

Sequence check off:

X	O	X	C-1A	C-1A	O	X	O	O	X	C-1F	C-1F	R	R
✓	✓	✓	✓	✓	✓	✓	✓	✓	✓	✓	✓	✓	✓

Level wind reset to 0.156

OF	OF	C-2F	C-2F	OF	OF	C-3F	C-3F	OF	OF	C-4F	C-4F	OF	OF	C-5F	C-5F
✓	✓	✓	✓	✓	✓	✓	✓	✓	✓	✓	✓	✓	✓	✓	✓

Level wind reset to 0.312

O	C-6F	C-6F	C-2A	C-2A	O	C-7F	C-7F	C-3A	C-3A	O	L	L	O	C-8F	DO	C-8F	DO	C-4A
✓	✓	✓	✓	✓	✓	✓	✓	✓	✓	✓	✓	✓	✓	✓	✓	✓	✓	✓

DO	C-4A	DO	C-9F	DO	C-9F	DO	C-5A	DO	C-5A	DO	C-10F	DO	C-10F	DO	C-6A	DO	C-6A	DO
✓	✓	✓	✓	✓	✓	✓	✓	✓	✓	✓	✓	✓	✓	✓	✓	✓	✓	✓

DO	DO		
✓	✓		

NOTE:

X	designates	Helix	A	designates	Aft
O	"	Full 90°	R	"	O-Ring
L	"	Label	OF	"	90° Fill
C	"	Cloth	DO	"	Doubler 90°
F	"	Fwd			

Doubler dia. measurements:

Unit serial No.	S/N 001	S/N 002
Outboard winding	3.170	3.181
Inboard winding	3.182	3.179
CENTER	3.176	

Excess resin removed without distorting winding

3. **B-Stage and Cure** — Operator No.

B-Stage: Time Started 2130 Time Completed 0045 4168

Date 8-2-72 4168

Cure: Time Started 0415 at 300 °F.

Time Completed 0415 at 300 °F.

Date 8-2-72 4168

4. **Machining and Stripping**

Parameter	Actuals			
Unit Identification	S/N 001		S/N 002	
Dimensions Measured	Max.	Min.	Max.	Min.
3.150 + .000 - .010 dia. Fwd	3.150	3.150	3.150	3.149
3.150 + .000 - .010 dia. Aft	3.150	3.150	3.150	3.149
2.734 + .004 - .000 dia.	2.735	2.735	2.735	2.735
.43 ± .030	.437	.436	.435	.437
8.05 ± .030	8.045	8.044	8.045	8.042
.060 ± .010	.060	.055	.065	.062

Operator No.

5. **Finishing**

Coating mixed correctly:

	Ingredient	Weight, gms.	Lot No.	
Adhesive	Epon 946A	100	ABL-56	782
Catalyst	Epon 946B	15	ABL-56	782
Thinner	Acetone	80	ABL-69	782

Cure: Time Started 1300 at 125 °F.

Time Complete 2100 at 123 °F.

Date 5-7-72 1194

Clean up work performed satisfactorily. 1894

Final Wt.: S/N 001, S/N 002

Wt. 264 CLARK, Wt. 264 CLARK 399

Supervisor Review [illegible] Date 8-10-72

Engineer Review _____ Date _____

C600.102

Manufacturing & Inspection Record

3.0 Dia. x 8.05 lg. Motor Case

P.R.D. Shell Fabrication

S/N 003 Dwg. 720608-1 Rev. A
S/N 004 Dwg. 720608-1 Rev. B

	Operator No.
1. Winding Preparation	
Machine set up installed. Level wind set to .312 lead.	826
Shaft extension T. I. R. .030.	2125
O-rings, screws, adapters and holes waxed.	2125
Mandrel cleaned properly	2125
(2) O-rings assembled properly.	2125
Roving (P.R.D., Type III, 12-end) installed. Lot No. 57.	2125
Roving tension: 1. 2 lb 2. 2 lb	2125
2. Winding	
Resin mixed correctly:	2125

	Ingredient	Weight, gm.	Lot No.	
Resin	2254	500	10459	
Catalyst	Tamox	145	4017	2125

2. **Winding (Con't)**

Sequence check off for S/N 003 & 004

X	O	C-1A	C-1A	X	O	C-2A	C-2A	X	O	C-3A	C-3A	X	O	C-1F	C-1F	R	R	OF	OF
X	X	X	X	X	X	X	X	X	X	✓	X	X	X	X	X	X	X	X	X

Operator No. 2125

Sequence continued S/N 004 Headstock

C-2F	C-3F	DO	C-4F	C-5F	C-4A	C-5A
X	X	X	✓	✓	✓	✓

756

Sequcence continued S/N 003 Tailstock

C-2F	DO	C-3F	DO	C-4F	C-4A
X	X	X	X	✓	✓

756

Sequence continued S/N 004 Headstock

O	C-6F	C-7F	C-8A	C-7A	O	C-8F	C-9F	C-8A	C-9A	O	C-10A	C-11A	DO	L
✓	✓	✓	✓	✓	X	✓	✓	✓	✓	✓		✓	✓	

756

Sequence continued S/N 003 Tailstock

O	C-5F	C-5A	O	C-6F	C-6A	O	C-7F	DO	C-7A	DO	C-8A	DO	C-9A	DO	L
✓	✓		✓	✓	✓	✓	✓	✓	✓	✓	✓	✓	✓	✓	

756

NOTE:

X	Designates	Helix	A	Designate:	Aft
O	"	Full 90°	R	"	O-ring
L	"	Label	OF	"	90° Fill
C	"	Cloth	DO	"	Doubler 90°
F	"	Fwd			

Doubler diameter measurements:

Unit serial No.	S/N [illegible]	S/N [illegible]
Outboard winding	3 191	3 185
Inboard winding	3 245	3 246

756

Excess resin removed without distorting winding 756

Reproduced from best available copy.

3. B-Stage and Cure

Operator No.

B-Stage: Time Started 0700 1/4/73 Time Completed 1100 hrs 1/4/73 3970

Date 1/4/73 3910

Cure: Time Started 1200 1/4/73 at 300 °F.

Time Completed 1500 at 305 °F.

Date 1/4/73 3970

4. Machining and Stripping

Parameter	Actuals			
Unit Identification	S/N 003		S/N 004	
Dimensions Measured	Max.	Min.	Max.	Min.
3.150 + .000 - .010 dia. Pad	3.150	3.149	3.150	3.150
3.150 + .000 - .010 dia. Alt	3.1485	3.145	3.148	3.147
2.734 + .004 - .000 dia.	2.746	2.746	2.737	2.719
.63 ± .030	.632		.627	
8.437 ± .030	8.437		8.437	
.060 ± .010	.060		.065	

1147

Operator No.

5. Finishing

Coating mixed correctly:

	Ingredient	Weight, gms.	Lot No.	
Adhesive	946-M	50	HBL 55	185-1
Catalyst	946-B	7½	HBL 55	185-1

Cure: Time Started 0200 at 140 °F.

Time Complete 1000 at 140 °F.

Date 1-9-73 2125

Clean up work performed satisfactorily. 2125

Final Wt.: S/N 003, S/N 004

Wt. 477 gms, Wt. 476 gms 2125

Supervisor Review M. Lacure Date 1-9-73

Engineer Review F. A. Rivers Date 1-9-73

Manufacturing & Inspection Record S/N's 005 & 006

9.0 Dia. x 2.05 In. Motor Case

P.R.D. Shell Fabrication

Dwg. 720608-1 Rev. A

	Operator No.
1. Winding Preparation	
Machine set up installed. Level wind set to .312 lead.	
Shaft extension T. I. R. .015.	1194
O-rings, screws, adapters and holes waxed.	1194
Mandrel cleaned properly	1194
(2) O-rings assembled properly.	1194
Roving (P.R.D., Type III, 12-end) installed. Lot No. [illegible]	1194
Roving tension: 1. 2 1/2 2. 3	1194
2. Winding	
Resin mixed correctly:	1194

	Ingredient	Weight, gm.	Lot No.	
Resin	[illegible]	[illegible]	[illegible]	
Catalyst	[illegible]	[illegible]	[illegible]	1194

2. Winding (Con't)

Sequence check off

X	O	C-1A	C-1A	X	O	C-2A	C-2A	X	O	C-3A	C-3A	X	O	C-1F	C-1F	R	R	OF	OF
✓	✓	✓	✓	✓	✓	✓	✓	✓	✓	✓	✓	✓	✓	✓	✓	✓	✓	✓	✓

Operator No. 2125

Sequence continued

C-2F	C-2F	OF	OF	C-3F	C-3F	OF	OF	C-4F	C-4F	C-4A	C-4A
✓	✓	✓	✓	✓	✓	✓	✓	✓	✓	✓	✓

4168

Sequence continued

O	C-5F	C-5F	C-5A	C-5A	O	C-6F	C-6F	C-6A	C-6A	O	C-7F	C-7F	C-7A	C-7A
✓	✓	✓	✓	✓	✓	✓	✓	✓	✓	✓	✓	✓	✓	✓

2125

Sequence continued

DO	DO	DO	DO	C-8A	C-8A	DO	DO	C-9A	C-9A	DO	DO	L	L
✓	✓	✓	✓	✓	✓	✓	✓	✓	✓	✓	✓	✓	✓

4168

NOTE:

X	Designates	Helix	A	Designates	Aft
O	"	Full 90°	R	"	O-ring
L	"	Label	OF	"	90° Fill
C	"	Cloth	DO	"	Doubler 90°
F	"	Pad			

Doubler diameter measurements:

Unit serial No.	S/N 005	S/N 006
Outboard winding	3.197	3.197
Inboard winding	3.200	3.212

2125

Excess resin removed without distorting winding 2125

3. B-Stage and Cure

Operator No.

B-Stage: Time Started 2130 Time Completed 2245 — 669

Date 2-15-73 — 669

Cure: Time Started 0515 at 300 °F.

Time Completed 0800 at 300 °F.

Date 2/15/73 — 3569

4. Machining and Stripping

Parameter	Actuals			
Unit Identification	S/N 005		S/N 006	
Dimensions Measured	Max.	Min.	Max.	Min.
3.150 + .000 - .010 dia. Pad	3.148	3.144	3.148	3.146
3.150 + .000 - .010 dia. Aft	3.147	3.145	3.147	3.147
2.734 + .004 - .000 dia.	2.740	2.739	2.740	2.740
.43 ± .030	.442		.431	
8.437 ± .030	8.442	8.441	8.443	8.442
.060 ± .010	.065		.060	

1147

Operator No.

5. **Finishing**

Coating mixed correctly:

	Ingredient	Weight, gms.	Lot No.	
Adhesive	ERL 1256	[illegible]	ERL-05	827
Catalyst	[illegible]	29	ARL-8	827

Cure: Time Started [illegible] at [illegible] °F.

Time Complete [illegible] at [illegible] °F.

Date [illegible] 667

Clean up work performed satisfactorily. _____

Final Wt.: S/N 005, S/N 006

Wt. 302, Wt. 304 _____

Supervisor Review _____ Date _____

Engineer Review _____ Date _____

Manufacturing & Inspection Record S/N's 007 & 008

3.0 Dia. x 2.05 lg. Motor Case

P.R.D. Shell Fabrication

Dwg. 720608-1 Rev. A

	Operator No.
1. Winding Preparation	
Machine set up installed. Level wind set to .312 lead.	
Shaft extension T. I. R. .015.	716
O-rings, screws, [illegible] and [illegible] waxed.	716
Mandrel cleaned properly	716
(2) O-rings assembled properly.	716
Roving (P.R.D., Type III, 12-end) installed. Lot No. [illegible].	716
Roving tension: 1. [illegible] 2. [illegible]	716
2. Winding	
Resin mixed correctly:	[illegible]

	Ingredient	Weight, grs.	Lot No.	
Resin	[illegible]	[illegible]	[illegible]	
Catalyst	[illegible]	145	[illegible]	[illegible]

Reproduced from best available copy.

2. Winding (Con't)

Sequence check off

X	O	C-1A	C-1A	X	O	C-2A	C-2A	X	O	C-3A	C-3A	X	O	C-1F	C-1F	R	R	OF	OF
✓	✓	✓	✓	✓	✓	✓	✓	✓	✓	✓	✓	✓	✓	✓	✓	✓	✓	✓	✓

Operator No. 786

Sequence continued

C-2F	C-2F	OF	OF	C-3F	C-3F	OF	OF	C-4F	C-4F	C-4A	C-4A
✓	✓	✓	✓	✓	✓	✓	✓	✓	✓	✓	✓

786

Sequence continued

O	C-5F	C-5F	C-5A	C-5A	O	C-6F	C-6F	C-6A	C-6A	O	C-7F	C-7F	C-7A	C-7A
✓	✓	✓	✓	✓	✓	✓	✓	✓	✓	✓	✓	✓	✓	✓

786

Sequence continued

DO	DO	DO	DO	C-8A	C-8A	DO	DO	C-9A	C-9A	DO	DO	L	L
✓	✓	✓	✓	✓	✓	✓	✓	✓	✓	✓	✓	✓	✓

1894

NOTE:

X	Designates	Helix	A	Designates	Aft
O	"	Full 90°	R	"	O-ring
L	"	Label	OF	"	90° Fill
C	"	Cloth	DO	"	Doubler 90°
F	"	Fwd			

Doubler diameter measurements:

Unit serial No.	S/N 007	S/N 008
Outboard winding	3.252	3.203
Inboard winding	3.230	3.231

1864

Excess resin removed without distorting winding 1864

3. B-Stage and Cure

Operator No.

B-Stage: Time Started 0330 Time Completed 1330 832

Date 2-20-73 832

Cure: Time Started 1415 at 255 °F.

Time Completed 1715 at 260 °F.

Date 2-20-73 293

4. Machining and Stripping

Parameter	Actuals			
Unit Identification	S/N 007		S/N 008	
Dimensions Measured	Max.	Min.	Max.	Min.
3.150 + .000 - .010 dia. Fwd	3.148	3.1475	3.149	3.147
3.150 + .000 - .010 dia. Aft	3.147	3.146	3.148	3.147
2.734 + .004 - .000 dia.	2.7395	2.739	2.7410	2.7395
.43 ± .030	.429		.435	
8.437 ± .030	8.444	8.443	8.442	8.440
.060 ± .010	.060		.063	

1147

Operator No.

5. Finishing

Coating mixed correctly:

	Ingredient	Weight, gms.	Lot No.	
Adhesive	ERL-2256	100	ABL-15	824
Catalyst	TONEX 6040	27	ABL-8	807

Cure: Time Started 1500-2-28-73 at 140 °F.

Time Complete 2300 at 140 °F.

Date 2/15/73 669

Clean up work performed satisfactorily.

Final Wt.: S/N 007, S/N 008

Wt. 299, Wt. 301

Supervisor Review _____ Date _____

Engineer Review _____ Date _____

Manufacturing & Inspection Record S/N's 009 & 010

3.0 Dia. x 8.05 lg. Motor Case

P.R.D. Shell Fabrication

Dwg. 720608-1 Rev. A

	Operator No.
1. Winding Preparation	
Machine set up installed. Level wind set to .312 lead.	
Shaft extension T. I. R. .015 .	1691
O-rings, screws, adapters and holes waxed.	1054
Mandrel cleaned properly	1077
(2) O-rings assembled properly.	1194
Roving (P.R.D., Type III, 12-end) installed. Lot No. [illegible]	1074
Roving tension: 1. 2 2. 2	[illegible]
2. Winding	
Resin mixed correctly:	0105

	Ingredient	Weight, gms.	Lot No.	
Resin	2256	100	A5427	
Catalyst	Tonox	29	A218	2135

2. Winding (Con't)

Sequence check off

X	O	C-1A	C-1A	X	O	C-2A	C-2A	X	O	C-3A	C-3A	X	O	C-1F	C-1F	R	R	OF	OF
✓	✓	✓	✓	✓	✓	✓	✓	✓	✓	✓	✓	✓	✓	✓	✓	✓	✓	✓	✓

Operator No

2125

Sequence continued

C-2F	C-2F	OF	OF	C-3F	C-3F	OF	OF	C-4F	C-4F	C-4A	C-4A
✓	✓	✓	✓	✓	✓	✓	✓	✓	✓	✓	✓

2125

Sequence continued

O	C-5F	C-5F	C-5A	C-5A	O	C-6F	C-6F	C-6A	C-6A	O	C-7F	C-7F	C-7A	C-7A
✓	✓	✓	✓	✓	✓	✓	✓	✓	✓		✓	✓	✓	✓

2125

Sequence continued

DO	DO	DO	DO	C-8A	C-8A	DO	DO	C-9A	C-9A	DO	DO	L	L
✓	✓	✓	✓	✓	✓	✓	✓	✓	✓	✓	✓	✓	✓

2125

NOTE:

X	Designates	Helix	A	Designates	Aft
O	"	Full 90°	R	"	O-ring
L	"	Label	OF	"	90° Fill
C	"	Cloth	DO	"	Doubler 90°
F	"	Red			

Doubler diameter measurements:

Unit serial No.	S/N 009	S/N 010
Outboard winding	3.122	3.123
Inboard winding	3.225	3.220

2125

Excess resin removed without distorting winding

2125

3. B-Stage and Cure

Operator No.

B-Stage: Time Started 1515 Time Completed 2115 669

Date 2-22-73 669

Cure: Time Started 2130 at 300 °F.

Time Completed 0030 at 300 °F.

Date 2-23-73 782

4. Machining and Stripping

Parameter	Actuals			
Unit Identification	S/N 009		S/N 010	
Dimensions Measured	Max.	Min.	Max.	Min.
3.150 + .000 - .010 dia. Fwd	3.147	3.147	3.148	3.147
3.150 + .000 - .010 dia. Aft	3.147	3.146	3.149	3.148
2.734 + .004 - .000 dia.	2.741	2.740	2.741	2.740
.43 ± .030	.422		.429	
8.437 ± .030	8.442	8.441	8.444	8.443
.060 ± .010	.060		.060	

1147

Operator No.

5. Finishing

Coating mixed correctly:

	Ingredient	Weight, gms.	Lot No.	
Adhesive	ERL-2256	100	ARL-26	827
Catalyst	TONEX 6140	29	ARL-8	827

Cure: Time Started 1430-2-25-73 at 140 °F.

Time Complete 2300 at 140 °F.

Date 2/28/73 669

Clean up work performed satisfactorily. _____

Final Wt.: S/N 009, S/N 010

Wt. 307, Wt. 301 _____

Supervisor Review _____ Date _____

Engineer Review _____ Date _____

Manufacturing & Inspection Record S/N's 011 & 012

3.0 Dia. x 8.05 lg. Motor Case

P.R.D. Shell Fabrication

Dwg. 720608-1 Rev. A

	Operator No.
1. Winding Preparation	
Machine set up installed. Level wind set to .312 lead.	826
Shaft extension T. I. R. .012.	1854
O-rings, screws, adapters and holes waxed.	1854
Mandrel cleaned properly	1854
(2) O-rings assembled properly.	1854
Roving (P.R.D., Type III, 12-end) installed. Lot No. 2.0B 211.	1854
Roving tension: 1. 1 2. 1½	1854
2. Winding	
Resin mixed correctly:	1854

	Ingredient	Weight, gms.	Lot No.	
Resin	[illegible]	500	[illegible]	
Catalyst	[illegible]	145	[illegible]	1854

Reproduced from best available copy.

2. Winding (Con't)

Sequence check off

Operator No.

X	O	C-1A	C-1A	X	O	C-2A	C-2A	X	O	C-3A	C-3A	X	O	C-1F	C-1F	R	R	OF	OF
✓	✓	✓	✓	✓	✓	✓	✓	✓	✓	✓	✓	✓	✓	✓	✓	✓	✓	✓	✓

2/25

Sequence continued

C-2F	C-2F	OF	OF	C-3F	C-3F	OF	OF	C-4F	C-4F	C-4A	C-4A
✓	✓	✓	✓	✓	✓	✓	✓	✓	✓	✓	✓

2/25

Sequence continued

O	C-5F	C-5F	C-5A	C-5A	O	C-6F	C-6F	C-6A	C-6A	O	C-7F	C-7F	C-7A	C-7A
✓	✓	✓	✓	✓	✓	✓	✓	✓	✓	✓	✓	✓	✓	✓

2/25

Sequence continued

DO	DO	DO	DO	C-8A	C-8A	DO	DO	C-9A	C-9A	DO	DO	L	L
✓	✓	✓	✓	✓	✓	✓	✓	✓	✓	✓	✓	✓	✓

2/25

NOTE:

X	Designates	Helix	A	Designates	Aft
O	"	Full 90°	R	"	O-ring
L	"	Label	OF	"	90° Fill
C	"	Cloth	DO	"	Doubler 90°
F	"	Pad			

Doubler diameter measurements:

Unit serial No.	S/N 011	S/N 012
Outboard winding	3.184	3.189
Inboard winding	3.244	3.234

2/25

Excess resin removed without distorting winding

2/25

3. B-Stage and Cure

Operator No.

B-Stage: Time Started 1300 Time Completed 1800 78

Date 2-27-73 78

Cure: Time Started 1900 at 300 °F.

Time Completed 2300 at 300 °F.

Date 2-27-73 393

4. Machining and Stripping

Parameter	Actuals			
Unit Identification	S/N 011		S/N 012	
Dimensions Measured	Max.	Min.	Max.	Min.
3.150 + .000 - .010 dia. Fwd	3.148	3.1475	3.147	3.146
3.150 + .000 - .010 dia. Aft	3.146	3.145	3.146	3.145 ~~3.143~~
2.734 + .004 - .000 dia.	2.7405	2.740	2.741	2.7405
.43 ± .030	.423		.427	
8.437 ± .030	8.441		8.440	
.060 ± .010	.065		.065	

1147

Operator No.

5. Finishing

Coating mixed correctly:

	Ingredient	Weight, gms.	Lot No.	
Adhesive	ERL 2256	100	ABL-27	4168 827
Catalyst	TONOX 6040	29	ABL-8	4168 827

Cure: Time Started 1130-3-1-63 at 140 °F.

Time Complete 1630 at 140 °F.

Date 3/1/63 4210

Clean up work performed satisfactorily. 3924

Final Wt.: S/N 011, S/N 012

Wt. 303 GRAMS, Wt. 302 GRAMS 880-4811

Supervisor Review A. A. Barrell Date 3/1/63

Engineer Review _____ Date _____

Manufacturing & Inspection Record S/N's 013 & 014

3.0 Dia. x 8.05 lg. Motor Case

P.R.D. Shell Fabrication

Dwg. 720608-1 Rev. A

	Operator No.
1. Winding Preparation	
Machine set up installed. Level wind set to .312 lead.	820
Shaft extension T. I. R. .022	832
O-rings, screws, adapters and holes waxed.	832
Mandrel cleaned properly	832
(2) O-rings assembled properly.	832
Roving (P.R.D., Type III, 12-end) installed. Lot No. _____.	
Roving tension: 1. 2# 2. 2#	832
2. Winding	
Resin mixed correctly:	832

	Ingredient	Weight, gms.	Lot No.	
Resin	2256	500	ABC-27	
Catalyst	[illegible]	145	ABC-8	832

2. Winding (Con't)

Sequence check off

X	O	C-1A	C-1A	X	O	C-2A	C-2A	X	O	C-3A	C-3A	X	O	C-1F	C-1F	R	R	OF	OF
✓	✓	✓	✓	✓	✓	✓	✓	✓	✓	✓	✓	✓	✓	✓	✓	✓	✓	✓	✓

Operator No 786

Sequence continued

C-2F	C-2F	OF	OF	C-3F	C-3F	OF	OF	C-4F	C-4F	C-4A	C-4A
✓	✓	✓	✓	✓	✓	✓	✓	✓	✓	✓	✓

786

Sequence continued

O	C-5F	C-5F	C-5A	C-5A	O	C-6F	C-6F	C-6A	C-6A	O	C-7F	C-7F	C-7A	C-7A
✓	✓	✓	✓	✓	✓	✓	✓	✓	✓		✓	✓	✓	✓

786

Sequence continued

DO	DO	DO	DO	C-8A	C-8A	DO	DO	C-9A	C-9A	DO	DO	L	L
✓	✓	✓	✓	✓	✓	✓	✓	✓	✓	✓	✓	✓	✓

786

NOTE:

X	Designates Helix		A	Designates Aft	
O	"	Full 90°	R	"	O-ring
L	"	Label	OF	"	90° Fill
C	"	Cloth	DO	"	Doubler 90°
F	"	Pad			

Doubler diameter measurements:

Unit serial No.	S/N 013	S/N 014
Outboard winding	3.194	3.200
Inboard winding	3.243	3.244

786

Excess resin removed without distorting winding 786

3. B-Stage and Cure

Operator No.

B-Stage: Time Started 2215 Time Completed 0130 880

Date 3-1-73 880

Cure: Time Started 0200 at 285 °F.

Time Completed 0500 at 300 °F.

Date 3-1-73 880

4. Machining and Stripping

Parameter	Actuals			
Unit Identification	S/N 013		S/N 014	
Dimensions Measured	Max.	Min.	Max.	Min.
3.150 + .000 - .010 dia. Fwd	3.150		3.149	
3.150 + .000 - .010 dia. Aft	3.147		3.145	
2.734 + .004 - .000 dia.	2.741	2.746	2.746	2.740
.43 ± .030	.437		.445	
8.437 ± .030	8.435		8.446	
.060 ± .010	.065		.065	

1147

Operator No.

5. Finishing

Coating mixed correctly:

	Ingredient	Weight, gms.	Lot No.	
Adhesive	2256	100	ABL27	669
Catalyst	Tonox 60/40	29	ABL8	669

Cure: Time Started 1615 at 140 °F.

Time Complete 0015 at 140 °F.

Date 3/1/73 4210

Clean up work performed satisfactorily. 3924

Final Wt.: S/N 013, S/N 014

Wt. _____, Wt. 311 GM 3924

This Unit was Used For Bonding

Supervisor Review C. Bosselli Date 3/2/73

Engineer Review _____ Date _____

Manufacturing & Inspection Record S/N's 015 & 016

3.0 Dia. x 8.05 lg. Motor Case

P.R.D. Shell Fabrication

Dwg. 720608-1 Rev. A

	Operator No.
1. Winding Preparation	
Machine set up installed. Level wind set to .312 lead.	149
Shaft extension T. I. R. 025.	2125
O-rings, screws, adapters and holes waxed.	2125
Mandrel cleaned properly	2125
(2) O-rings assembled properly.	2125
Roving (P.R.D., Type III, 12-end) installed. Lot No. 2022 [illegible].	2125
Roving tension: 1. 2 2. 2	2125
2. Winding	
Resin mixed correctly:	2125

	Ingredient	Weight, gms.	Lot No.	
Resin	2256	120	AB-27	
Catalyst	Tovox	29	ABLF	2125

2. Winding (Con't)

Sequence check off

X	O	C-1A	C-1A	X	O	C-2A	C-2A	X	O	C-3A	C-3A	X	O	C-1F	C-1F	R	R	OF	OF
✓	✓	✓	✓	✓	✓	✓	✓	✓	✓	✓	✓	✓	✓	✓	✓	✓	✓	✓	✓

Operator No. 786

Sequence continued

C-2F	C-2F	OF	OF	C-3F	C-3F	OF	OF	C-4F	C-4F	C-4A	C-4A
✓	✓	✓	✓	✓	✓	✓	✓	✓	✓	✓	✓

786

Sequence continued

O	C-5F	C-5F	C-5A	C-5A	O	C-6F	C-6F	C-6A	C-6A	O	C-7F	C-7F	C-7A	C-7A
✓	✓	✓	✓	✓	✓	✓	✓	✓	✓	✓	✓	✓	✓	✓

786

Sequence continued

DO	DO	DO	DO	C-8A	C-8A	DO	DO	C-9A	C-9A	DO	DO	L	L
✓	✓	✓	✓	✓	✓	✓	✓	✓	✓	✓	✓		

786

NOTE:

X	Designates	Helix	A	Designates	Aft
O	"	Full 90°	R	"	O-ring
L	"	Label	OF	"	90° Fill
C	"	Cloth	DO	"	Doubler 90°
F	"	Fwd			

Doubler diameter measurements:

Unit serial No.	S/N 015	S/N 016
Outboard winding	3.211	3.190
Inboard winding	3.236	3.250

786

Excess resin removed without distorting winding 786

3. B-Stage and Cure

Operator No.

B-Stage: Time Started 2045 Time Completed 2400 880

Date 3-1-73 880

Cure: Time Started 0030 at 300 °F.

Time Completed 0315 at 300 °F.

Date 3-2-73 880

4. Machining and Stripping

Parameter	Actuals			
Unit Identification	S/N 015		S/N 016	
Dimensions Measured	Max.	Min.	Max.	Min.
3.150 + .000 - .010 dia. Fwd	3.145	3.144	3.149	3.147
3.150 + .000 - .010 dia. Aft	3.147	3.146	3.146	3.145
2.734 + .004 - .000 dia.	2.7465	2.740	2.741	2.7465
.43 ± .030	.429		.430	
8.437 ± .030	8.454	8.453	8.450	8.449
.060 ± .010	.060		.062	

.147

Operator No.

5. Finishing

Coating mixed correctly:

	Ingredient	Weight, gms.	Lot No.	
Adhesive	Epon 946A	50.0	ABL-60	782
Catalyst	Epon 946B	7.5	ABL-60	782
Acetone		40.0	ABL-78	782

Cure: Time Started 1630 at 130 °F.

Time Complete 0030 at 130 °F.

Date 3-6-73 776

Clean up work performed satisfactorily. 3924

Final Wt.: S/N 015, S/N 016

Wt. 301 GRAMS, Wt. ~~302~~ 297 GRAMS 3-14-73 23 880-4211

Supervisor Review [signature] Date 3/14/73

Engineer Review _____ Date _____

Manufacturing & Inspection Record S/N's 017 & 018

3.0 Dia. x 8.05 lg. Motor Case

P.R.D. Shell Fabrication

Dwg. 720608-1 Rev. A

	Operator No.
1. Winding Preparation	
Machine set up installed. Level wind set to .312 lead.	832
Shaft extension T. I. R. .017.	832
O-rings, screws, adapters and holes waxed.	832
Mandrel cleaned properly	832
(2) O-rings assembled properly.	832
Roving (P.R.D., Type III, 12-end) installed. Lot No. 66C10.	832
Roving tension: 1. 2¼ 2. 2¼	832

2. Winding

Resin mixed correctly: 832

	Ingredient	Weight, gms.	Lot No.	
Resin	2256	576	ABC-27	
Catalyst	tonox 4040	145	ABC-9	832

2. Winding (Con't)

Sequence check off

Operator No.

X	O	C-1A	C-1A	X	O	C-2A	C-2A	X	O	C-3A	C-3A	X	O	C-1F	C-1F	R	R	OF	OF
✓	✓	✓	✓	✓	✓	✓	✓	✓	✓	✓	✓	✓	✓	✓	✓	✓	✓	✓	✓

786

Sequence continued

C-2F	C-2F	OF	OF	C-3F	C-3F	OF	OF	C-4F	C-4F	C-4A	C-4A
✓	✓	✓	✓	✓	✓	✓	✓	✓	✓	✓	✓

786

Sequence continued

O	C-5F	C-5F	C-5A	C-5A	O	C-6F	C-6F	C-6A	C-6A	O	C-7F	C-7F	C-7A	C-7A
✓	✓	✓	✓	✓	✓	✓	✓	✓	✓	✓	✓	✓	✓	✓

786

Sequence continued

DO	DO	DO	DO	C-8A	C-8A	DO	DO	C-9A	C-9A	DO	DO	L	L
✓	✓	✓	✓	✓	✓	✓	✓	✓	✓	✓	✓	✓	✓

786

NOTE:

X	Designates	Helix	A	Designates	Aft
O	"	Full 90°	R	"	O-ring
L	"	Label	OF	"	90° Fill
C	"	Cloth	DO	"	Doubler 90°
F	"	Fwd			

Doubler diameter measurements:

Unit serial No.	S/N 017	S/N 018
Outboard winding	3.194	3.195
Inboard winding	3.225	3.226

786

Excess resin removed without distorting winding

786

3. **B-Stage and Cure** — Operator No.

3/16/73

B-Stage: Time Started 1145 Time Completed 1745 — 880

Date 3-16-73 — 880

Cure: Time Started 1800 at 290 °F.

Time Completed 2100 at 300 °F.

Date 3-16-73 — 880

4. **Machining and Stripping**

Parameter	Actuals			
Unit Identification	S/N 017		S/N 018	
Dimensions Measured	Max.	Min.	Max.	Min.
3.150 + .000 - .010 dia. Fwd	3.148		3.148	
3.150 + .000 - .010 dia. Aft	3.147 ~~3.147~~		3.149	
2.734 + .004 - .000 dia.	2.7465	2.746	2.7395	2.739
.43 ± .030	.433		.440	
8.437 ± .030	8.449	8.448	8.460	8.459
.060 ± .010	.065		.061	

1147

Operator No.

5. Finishing

Coating mixed correctly:

	Ingredient	Weight, gms.	Lot No.	
Adhesive	946 A	50	ABL-60	880
Catalyst	946 B	7½	ABL-60	880
Acetone	ACETONE	40	ABL-78	880

Cure: Time Started 4-19-73 1945 at 75 °F.

Time Complete 1945 at 75 °F.

Date 4-19-73 4210

Clean up work performed satisfactorily. 4210

Final Wt.: S/N 017, S/N 018

Wt. 298, Wt. 300 4210

Supervisor Review A.J. Barrett Date 4/19/73

Engineer Review _____ Date _____

Manufacturing & Inspection Record S/N's 019 & 020

2.0 Dia. x 8.05 lg. Motor Case

Glass Nozzle Fabrication

Dwg. 720608-2

	Operator No.
1. Winding Preparation	
Machine set up installed.	226
Shaft extension T. I. R. .025.	2125
O-rings waxed only.	2125
Mandrel cleaned properly	2125
(4) O-rings and mandrel assembled properly.	2125
Roving (S904, 12-end) installed. Lot No. ABL5.	2125
Roving tension: 1. 7 2. 1½ 3. 2	2125
2. Winding	
Resin mixed correctly:	2125

	Ingredient	Weight, gms.	Lot No.	
Resin	2256	100	ABL27	
Catalyst	Tonox	29	A13L8	2125

Operator

2. Winding (cont.)

Sequence check off:

X	X	X	X	0	0	0	0	0	0	C1	C2	0	C3	C4	0	C5	C6	0
✓	✓	✓	✓	✓	✓	✓	✓	✓	✓	✓	✓	✓	✓	✓	✓	✓	✓	✓

C7	C8	0	C9	C10	0	C11	C12	0	C13	C14	0
✓	✓	✓	✓	✓	✓	✓	✓	✓	✓	✓	✓

2125

Throat dia. measurements:

Unit Serial No.	S/N 019	S/N 020	
After (6) 90° Winding:	2.275	2.272	
After cloth/90° Buildup:	2.750	2.750	2125

Excess resin removed without distorting winding 2125

Doublers wound correctly at each end 2125

3. B-Stage and Cure — Operator No.

B-Stage: Time Started 1500 Time Completed 1830 — 786

Date 3-2-73 — 786

Cure: Time Started 1900 at 225 °F.

Time Completed 2200 at 300 °F.

Date 3-2-73 — 786

4. Machining and Stripping

Parameter	Actuals			
Unit Identification	S/N 019		S/N 020	
Dimensions Measured	Max.	Min.	Max.	Min.
3.150 + .000 - .010 dia.	3.145		3.149	
2.491 + .000 - .002 dia.	2.490		2.490	
Throat Dia.-Record 1.922 + .000 - .003 dia.	1.922	1.9215	1.9225	1.922
2.731 + .000 - .004 dia.	2.729	2.728	2.729	2.7285
2.946 I.D. Exit Plane-Record	2.958	2.955	2.960	2.955
.210 ± .005	.212		.210	

1147

Operator No.

5. Finishing

Coating mixed correctly:

	Ingredient	Weight, gms.	Lot No.	
Adhesive	Epon 828	50.0	881-60	772
Catalyst	Epon 4143	7.5	881-60	772
Thinner	Acetone	40.0	881-78	772

Cure: Time Started 1630 at 130 °F.

Time Complete 0030 at 130 °F.

Date 3/6/73 776

Clean up work performed satisfactorily. 3941

Final Wt.: S/N 019, S/N 020

Wt. 136 GRAMS, Wt. 135 GRAMS 880 - 9211

Supervisor Review [signature] Date 3/6/73

Engineer Review _____ Date _____

Manufacturing & Inspection Record S/N's 019 & 020

3.0 Dia. x 8.05 lg. Motor Case

P.R.D. Shell Fabrication

Dwg. 720608-1 Rev. A

	Operator No.
1. Winding Preparation	
Machine set up installed. Level wind set to .312 lead.	119
Shaft extension T. I. R. .624	716
O-rings, screws, adapters and holes waxed.	716
Mandrel cleaned properly	116
(2) O-rings assembled properly.	716
Roving (P.R.D., Type III, 12-end) installed. Lot No. [illegible]	716
Roving tension: 1. [illegible] 2. [illegible]	716
2. Winding	
Resin mixed correctly:	716

	Ingredient	Weight, gms.	Lot No.	
Resin	[illegible]	[illegible]	[illegible]	
Catalyst	[illegible]	[illegible]	[illegible]	716

2. Winding (Con't)

Sequence check off — Operator No

X	O	C-1A	C-1A	X	O	C-2A	C-2A	X	O	C-3A	C-3A	X	O	C-1F	C-1F	R	R	OF	OF
✓	✓	✓	✓	✓	✓	✓	✓	✓	✓	✓	✓	✓	✓	✓	✓	✓	✓	✓	✓

189

Sequence continued

C-2F	C-2F	OF	OF	C-3F	C-3F	OF	OF	C-4F	C-4F	C-4A	C-4A
✓	✓	✓	✓	✓	✓	✓	✓	✓	✓	✓	✓

189

Sequence continued

O	C-5F	C-5F	C-5A	C-5A	O	C-6F	C-6F	C-6A	C-6A	O	C-7F	C-7F	C-7A	C-7A
✓	✓	✓	✓	✓	✓	✓	✓	✓	✓	✓	✓	✓	✓	✓

189

Sequence continued

DO	DO	DO	DO	C-8A	C-8A	DO	DO	C-9A	C-9A	DO	DO	L	L
✓	✓	✓	✓	✓	✓	✓	✓	✓	✓	✓	✓		

189

NOTE:

X	Designates	Helix	A	Designates	Aft
O	"	Full 90°	R	"	O-ring
L	"	Label	OF	"	90° Fill
C	"	Cloth	DO	"	Doubler 90°
F	"	Pad			

Doubler diameter measurements:

	S/N 019	S/N 020
Unit serial No.		
Outboard winding	3.206	3.192
Inboard winding	3.277	3.287

189

Excess resin removed without distorting winding — 189

3. **B-Stage and Cure** — Operator No.

B-Stage: Time Started 1045 Time Completed 1645 — 776

Date 3/20/73 — 776

Cure: Time Started 1700 at 300 °F.

Time Completed 2000 at 300 °F.

Date 3/20/73 — 827

4. Machining and Stripping

Parameter	Actuals			
Unit Identification	S/N 019		S/N 020	
Dimensions Measured	Max.	Min.	Max.	Min.
3.150 + .000 - .010 dia. Fwd	3.148		3.149	
3.150 + .000 - .010 dia. Aft	3.147		3.146	
2.734 + .004 - .000 dia.	2.7415	2.741	2.741	2.7405
.43 ± .030	.445		.432	
8.437 ± .030	8.447	8.446	8.452	8.451
.060 ± .010	.062		.060	

1147

Reproduced from best available copy.

Operator No.

5. **Finishing**

Coating mixed correctly:

	Ingredient	Weight, gms.	Lot No.	
Adhesive	946 A	50	ABL-60	880
Catalyst	946 B	7 ½	ABL-60	880
Acetone	ACETONE	40	ABL-78	880

Cure: Time Started 4-18-73 1945 at 75 °F.

Time Complete 1945 at 75 °F.

Date 4-19-73 4210

Clean up work performed satisfactorily. 4210

Final Wt.: S/N 019, S/N 020

Wt. 306, Wt. 303 4210

Supervisor Review [signature] Date 4/19/73

Engineer Review _____ Date _____

Manufacturing & Inspection Record S/N's 021 & 022

3.0 Dia. x 8.05 lg. Motor Case

P.R.D. Shell Fabrication

Dwg. 720608-1 Rev. A

	Operator No.
1. Winding Preparation	
Machine set up installed. Level wind set to .312 lead.	2125
Shaft extension T. I. R. 027.	2125
O-rings, screws, adapters and holes waxed.	2125
Mandrel cleaned properly	2125
(2) O-rings assembled properly.	2125
Roving (P.R.D., Type III, 12-end) installed. Lot No. 8-2.	2125
Roving tension: 1. 2 2. 2½	2125
2. Winding	
Resin mixed correctly:	2125

	Ingredient	Weight, gms.	Lot No.	
Resin	2256	100	A8627	
Catalyst	TONOX	29	A8[illegible]9	2125

2. Winding (Con't)

Sequence check off

X	O	C-1A	C-1A	X	O	C-2F	C-2A	X	O	C-3A	C-3A	X	O	C-1F	C-1F	R	R	OF	OF
✓	✓	✓	✓	✓	✓	✓	✓	✓	✓	✓	✓	✓	✓	✓	✓	✓	✓	✓	✓

Operator No.

2125

Sequence continued

C-2F	C-2F	OF	OF	C-3F	C-3F	OF	OF	C-4F	C-4F	C-4A	C-4A
✓	✓	✓	✓	✓	✓	✓	✓	✓	✓	✓	✓

2125

Sequence continued

O	C-5F	C-5F	C-5A	C-5A	O	C-6F	C-6F	C-6A	C-6A	O	C-7F	C-7F	C-7A	C-7A
✓	✓	✓	✓	✓	✓	✓	✓	✓	✓	✓	✓	✓	✓	✓

2125

Sequence continued

DO	DO	DO	DO	C-8A	C-8A	DO	DO	C-9A	C-9A	DO	DO	L	L
✓	✓	✓	✓	✓	✓	✓	✓	✓	✓	✓	✓	✓	✓

2125

NOTE:

X	Designates	Helix	A	Designates	Aft
O	"	Full 90°	R	"	O-ring
L	"	Label	OF	"	90° Fill
C	"	Cloth	DO	"	Doubler 90°
F	"	Fwd			

Doubler diameter measurements:

Unit serial No.	S/N 021	S/N 022
Outboard winding	3.190	3.193
Inboard winding	3.243	3.253

2125

Excess resin removed without distorting winding

2125

3. B-Stage and Cure

Operator No.

B-Stage: Time Started 2315 Time Completed 0430 786

Date 3-28-73 786

Cure: Time Started 0500 at 255 °F.

Time Completed 0800 at 300 °F.

Date 3-28-73 782

4. Machining and Stripping

Parameter	Actuals			
Unit Identification	S/N 021		S/N 022	
Dimensions Measured	Max.	Min.	Max.	Min.
3.150 + .000 - .010 dia. Fwd	3.148		3.149	
3.150 + .000 - .010 dia. Aft	3.145		3.146	
2.734 + .004 - .000 dia.	2.740	2.7345	2.741	2.740
.43 ± .030	.440		.437	
8.437 ± .030	8.451	8.4505	8.451	8.450
.060 ± .010	.061		.055	

1147

Operator No.

5. Finishing

Coating mixed correctly:

	Ingredient	Weight, gms.	Lot No.	
Adhesive	946 A	50	ABL-60	880
Catalyst	946 B	7 1/2	ABL-60	880
Acetone	ACETONE	40	ABL-78	880

Cure: Time Started 4-18-73 1945 at 75 °F.

Time Complete 1945 at 75 °F.

Date 4-19-73 4210

Clean up work performed satisfactorily. 4210

Final Wt.: S/N 021, S/N 022

Wt. 302, Wt. 301 4210

Supervisor Review A.A. Barulli Date 4/19/73

Engineer Review _____ Date _____

Manufacturing & Inspection Record S/N's 023 & 024

3.0 Dia. x 8.05 lg. Motor Case

P.R.D. Shell Fabrication

Dwg. 720608-1 Rev. A

	Operator No.
1. Winding Preparation	
Machine set up installed. Level wind set to .312 lead.	[illegible]
Shaft extension T. I. R. .011.	[illegible]
O-rings, screws, adapters and holes waxed.	[illegible]
Mandrel cleaned properly	[illegible]
(2) O-rings assembled properly.	[illegible]
Roving (P.R.D., Type III, 12-end) installed. Lot No. [illegible].	[illegible]
Roving tension: 1. [illegible] 2. [illegible]	[illegible]
2. Winding	
Resin mixed correctly:	[illegible]

	Ingredient	Weight, gms.	Lot No.	
Resin	[illegible]	[illegible]	[illegible]	
Catalyst	[illegible]	[illegible]	[illegible]	[illegible]

2. Winding (Con't)

Sequence check off

X	O	C-1A	C-1A	X	O	C-2A	C-2A	X	O	C-3A	C-3A	X	O	C-1F	C-1F	R	R	OF	OF	Operator No.
✓	✓	✓	✓	✓	✓	✓	✓	✓	✓	✓	✓	✓	✓	✓	✓	✓	✓	✓	✓	4168

Sequence continued

C-2F	C-2F	OF	OF	C-3F	C-3F	OF	OF	C-4F	C-4F	C-4A	C-4A	
✓	✓	✓	✓	✓	✓	✓	✓	✓	✓	✓	✓	4168

Sequence continued

O	C-5F	C-5F	C-5A	C-5A	O	C-6F	C-6F	C-6A	C-6A	O	C-7F	C-7F	C-7A	C-7A	
✓	✓	✓	✓	✓	✓	✓	✓	✓	✓	✓	✓	✓	✓	✓	785

Sequence continued

DO	DO	DO	DO	C-8A	C-8A	DO	DO	C-9A	C-9A	DO	DO	L	L	
✓	✓	✓	✓	✓	✓	✓	✓	✓	✓	✓	✓	✓	✓	785

NOTE:

X	Designates	Helix	A	Designates	Aft
O	"	Full 90°	R	"	O-ring
L	"	Label	OF	"	90° Fill
C	"	Cloth	DO	"	Doubler 90°
F	"	Fwd			

Doubler diameter measurements:

Unit serial No.	S/N 023	S/N 024	
Outboard winding	3.190	3.195	
Inboard winding	3.250	3.258	786

Excess resin removed without distorting winding 786

3. **B-Stage and Cure** — Operator No.

B-Stage: Time Started 0130 Time Completed 0530 — 669

Date 3-29-73 — 669

Cure: Time Started 0545 at 300 °F.

Time Completed 0845 at 300 °F.

Date 3-29-73 — 782

4. **Machining and Stripping**

Parameter	Actuals				
Unit Identification	S/N 023		S/N 024		
Dimensions Measured	Max.	Min.	Max.	Min.	
3.150 + .000 - .010 dia. Fwd	3.1485		3.149		
3.150 + .000 - .010 dia. Aft	3.146		3.147		
2.734 + .004 - .000 dia.	2.741	2.7465	2.741	2.7465	1181 7
.43 ± .030	.435		.446		
8.437 ± .030	8.447	8.448	8.452	8.451	
.060 ± .010	.064		.062		

Operator No.

5. **Finishing**

Coating mixed correctly:

	Ingredient	Weight, gms.	Lot No.	
Adhesive	946A	50	ABL-60	880
Catalyst	946 B	7 ½	ABL-60	880
Acetone	ACETONE	40	ABL-78	880

Cure: Time Started 4-18-73 1945 at 75 °F.

Time Complete 1945 at 75 °F.

Date 4-19-73 4210

Clean up work performed satisfactorily. 4210

Final Wt.: S/N 023, S/N 024

Wt. 297, Wt. 297 4210

Supervisor Review [illegible] Date 4/15/73

Engineer Review _____ Date _____

Manufacturing & Inspection Record S/N's 025 & 026

3.0 Dia. x 8.05 lg. Motor Case

P.R.D. Shell Fabrication

Dwg. 720608-1 Rev. A

	Operator No.
1. Winding Preparation	
Machine set up installed. Level wind set to .312 lead.	716
Shaft extension T. I. R. 0.23.	716
O-rings, screws, adapters and holes waxed.	716
Mandrel cleaned properly	716
(2) O-rings assembled properly.	716
Roving (P.R.D., Type III, 12-end) installed. Lot No. 0935-7 0945-15	716
Roving tension: 1. 1 3/4 2. 2	716
2. Winding	
Resin mixed correctly:	716

	Ingredient	Weight, gms.	Lot No.	
Resin	2256	100	AHL 27	
Catalyst	Tonox 60/40	24	AKL 9	716

2. Winding (Con't)

Sequence check off — Operator No.

X	O	C-1A	C-1A	X	O	C-2A	C-2A	X	O	C-3A	C-3A	X	O	C-1F	C-1F	R	R	OF	OF
✓	✓	✓	✓	✓	✓	✓	✓	✓	✓	✓	✓	✓	✓	✓	✓	✓	✓	✓	✓

1854

Sequence continued

C-2F	C-2F	OF	OF	C-3F	C-3F	OF	OF	C-4F	C-4F	C-4A	C-4A
✓	✓	✓	✓	✓	✓	✓	✓	✓	✓	✓	✓

1854

Sequence continued

O	C-5F	C-5F	C-5A	C-5A	O	C-6F	C-6F	C-6A	C-6A	O	C-7F	C-7F	C-7A	C-7A
✓	✓	✓	✓	✓	✓	✓	✓	✓	✓	✓	✓	✓	✓	✓

1854

Sequence continued

DO	DO	DO	DO	C-8A	C-8A	DO	DO	C-9A	C-9A	DO	DO	L	L
✓	✓	✓	✓	✓	✓	✓	✓	✓	✓	✓	✓	✓	✓

1854

NOTE:

X	Designates	Helix	A	Designates	Aft
O	"	Full 90°	R	"	O-ring
L	"	Label	OF	"	90° Fill
C	"	Cloth	DO	"	Doubler 90°
F	"	Fwd			

Doubler diameter measurements:

Unit serial No.	S/N 025	S/N 026
Outboard winding	3.193	3.182
Inboard winding	3.265	3.269

1854

Excess resin removed without distorting winding — 1854

3. B-Stage and Cure

Operator No.

B-Stage: Time Started 1150 Time Completed 1450 782

Date 3-30-73 782

Cure: Time Started 1500 at 300 °F.

Time Completed 1900 at 300 °F.

Date 3/30/73 776

4. Machining and Stripping

Parameter	Actuals			
Unit Identification	S/N 025		S/N 026	
Dimensions Measured	Max.	Min.	Max.	Min.
3.150 + .000 - .010 dia. Fwd	3.148		3.148	
3.150 + .000 - .010 dia. Aft	3.147		3.148	
2.734 + .004 - .000 dia.	2.741	2.740	2.7415	2.741
.43 ± .030	.441		.434	
8.437 ± .030	8.449	8.448	8.448	8.447
.060 ± .010	.060		.061	

1147

Operator No

5. Finishing

Coating mixed correctly:

	Ingredient	Weight, gms.	Lot No.	
Adhesive	946 A	50	ABL-60	890
Catalyst	946 B	7 ½	ABL-60	880
Acetone	ACETONE	40	ABL-78	890

Cure: Time Started 4-18-73 1945 at 75 °F.

Time Complete 4-19-73 1945 at 75° °F.

Date 4-19-73 4210

Clean up work performed satisfactorily. 4210

Final Wt.: S/N 025, S/N 026

Wt. 302, Wt. 300 gms. 4210

Supervisor Review [illegible] Date [illegible]

Engineer Review _____ Date _____

R. J. DALE W/O C402.041

Manufacturing & Inspection Record

3.0 Dia. x 8.05 lg. Motor Case

Glass Nozzle Fabrication

Dwg. 720608-2

Operator No. →

1. Winding Preparation

Machine set up installed. Level wind set to _____ _____

Shaft extension T. I. R. .01 . 786

O-rings waxed only. 786

Mandrel cleaned properly 786

(4) O-rings and mandrel assembled properly. 786

Roving (S904, 12-end) installed. Lot No. 2053 . 786

Roving tension: 1. R. O 2. 1. 3/4 3. 1/2 786

2. Winding

Resin mixed correctly: 786

	Ingredient	Weight, gms.	Lot No.	
Resin	2256	100	ABL 17	
Catalyst	TENOX 64/40	29	ABL 7	786

Operator

2. Winding (cont.)

Sequence check off:

X	X	X	X	0	0	0	0	0	0	C1	C2	0	C3	C4	0	C5	C6	0
✓	✓	✓	✓	✓	✓	✓	✓	✓	✓	✓	✓	✓	✓	✓	✓	✓	✓	✓

C7	C8	0	C9	C10	0	C11	C12	0	C13	C14	0
✓	✓	✓	✓	✓	✓	✓	✓	✓	✓	✓	✓

786

Throat dia. measurements:

Unit Serial No.	S/N 001	S/N 002	
After (6) 90° Winding:	2.283	2.282	
After cloth/90° Buildup:	2.770	2.774	786
Excess resin removed without distorting winding			786
Doublers wound correctly at each end			1894

3. B-Stage and Cure

Operator No.

B-Stage: Time Started 1000 Time Completed 1415 1894

Date 7-21-72 1894

Cure: Time Started 1445 at 285 °F.

Time Completed 1745 at 300 °F.

Date 7/21/72 776

4. Machining and Stripping

Parameter	Actuals			
Unit Identification	S/N .001		S/N .002	
Dimensions Measured	Max.	Min.	Max.	Min.
3.150 + .000 - .010 dia.	3.148	3.147	3.150	3.149
2.491 + .000 - .002 dia.	2.491	2.490	2.491	2.490
1.922 + .000 - .003 dia.	1.9205 ~~2.9205~~ DN	1.9205 ~~2.9205~~ DN.	1.9225 ~~2.9225~~ DN	1.9225 ~~2.9225~~ DN.
2.731 + .000 - .004 dia.	2.730	2.729	2.729	2.728
2.946 ± .010 dia.	2.945	2.944	2.945	2.944
.210 ± .005	.210	.210	.210	.210

Operator No.

5. Finishing

Coating mixed correctly:

	Ingredient	Weight, gms.	Lot No.	
Adhesive	946 A	50	ABL 55	786
Catalyst	946 B	7½	ABL 55	786
Thinner	Acetone	40	ABL 69	786

Cure: Time Started 1830 at 130 °F.

Time Complete 0230 at 130 °F.

Date 7/25/72 3924

Clean up work performed satisfactorily. 3924

Final Wt.: S/N 001, S/N 002

Wt. 137 grms., Wt. 134 gr. 3924

302 lb .295

Supervisor Review A. A. Bonelli Date 7/25/72

Engineer Review J. A. Rivera Date 7/26/72

Manufacturing & Inspection Record

3.0 Dia. x 8.05 lg. Motor Case

Glass Nozzle Fabrication

Dwg. 720608-2

	Operator No.
1. Winding Preparation	
Machine set up installed. Level wind set to _____	_____
Shaft extension T. I. R. .015 .	786
O-rings waxed only.	786
Mandrel cleaned properly	786
(4) O-rings and mandrel assembled properly.	786
Roving (S904, 12-end) installed. Lot No. 2053 .	786
Roving tension: 1. 2 1/4 2. 1 1/4 3. 1 1/4	786
2. Winding	
Resin mixed correctly:	[illegible]

	Ingredient	Weight, gms.	Lot No.	
Resin	[illegible]	[illegible]	[illegible]	
Catalyst	[illegible]	[illegible]	[illegible]	[illegible]

Operator

2. Winding (cont.)

Sequence check off:

X	X	X	X	0	0	0	0	0	0	C1	C2	0	C3	C4	0	C5	C6	0
[illegible]	[illegible]	[illegible]	[illegible]	[illegible]	[illegible]	[illegible]	[illegible]	[illegible]	[illegible]	[illegible]	[illegible]	[illegible]	[illegible]	[illegible]	[illegible]	[illegible]	[illegible]	[illegible]

C7	C8	0	C9	C10	0	C11	C12	0	C13	C14	0
[illegible]	[illegible]	[illegible]	[illegible]	[illegible]	[illegible]	[illegible]	[illegible]	[illegible]	[illegible]	[illegible]	[illegible]

[illegible]

Throat dia. measurements:

Unit Serial No.	S/N 003	S/N [illegible]	
After (6) 90° Winding:	[illegible]	[illegible]	
After cloth/90° Buildup:	[illegible]	[illegible]	[illegible]

Excess resin removed without distorting winding [illegible]

Doublers wound correctly at each end [illegible]

Best Available Copy

3. B-Stage and Cure — Operator No.

B-Stage: Time Started 0930 Time Completed 1015 2125

Date 7/31/72 2125

Cure: Time Started 1100 at 500 °F.

Time Completed 1400 at 500 °F.

Date 7/31/72 2125

4. Machining and Stripping

Parameter	Actuals			
Unit Identification	S/N 003		S/N 004	
Dimensions Measured	Max.	Min.	Max.	Min.
3.150 + .000 - .010 dia.	3.146	3.146	3.147	3.1475
2.491 + .000 - .002 dia.	2.490	2.4875	2.490	2.4895
1.922 + .000 - .003 dia.	1.920	1.920	1.9225	1.922
2.731 + .000 - .004 dia.	2.731	2.731	2.731	2.731
2.946 ± .010 dia.	2.948	2.946	2.947	2.946
.210 ± .005	.210	.210	.210	.210

Operator No.

5. Finishing

Coating mixed correctly:

	Ingredient	Weight, gms.	Lot No.	
Adhesive	Epon 946 A	50.0	ABL-58	782
Catalyst	Epon 946 B	7.5	ABL-58	782
Thinner	Acetone	40.0	ABL-69	782

Cure: Time Started 1400 at 120 °F.

Time Complete 2200 at 120 °F.

Date 8/10/72 3524

Clean up work performed satisfactorily. 3924

Final Wt.: S/N [illegible], S/N [illegible]

Wt. [illegible], Wt. [illegible] 26

Supervisor Review A.J. Bonelli Date 8/10/72

Engineer Review [illegible] Date [illegible]

C402.323

Manufacturing & Inspection Record

3.0 Dia. x 8.05 lg. Motor Case

Glass Nozzle Fabrication

Dwg. 720608-2

	Operator No.
1. Winding Preparation	
Machine set up installed. Level wind set to	826
Shaft extension T. I. R. 25.	425
O-rings waxed only.	4211
Mandrel cleaned properly	4128
(4) O-rings and mandrel assembled properly.	4211
Roving (S994, 12-end) installed. Lot No. ABL-4.	4128
Roving tension: 1. 2 lbs 2. 2½ lbs 3. 2 lbs	689

2. Winding

Resin mixed correctly:				669
	Ingredient	Weight, gms.	Lot No.	
Resin	3256	100	ABL-34	
Catalyst	TONOX 60/40	29	ABL-7	660

Operator

2. Winding (cont.)

Sequence check off:

X	X	X	X	0	0	0	0	0	0	C1	C2	0	C3	C4	0	C5	C6	0
✓	✓	✓	✓	✓	✓	✓	✓	✓	✓	✓	✓	✓	✓	✓	✓	✓	✓	✓

C7	C8	0	C9	C10	0	C11	C12	0	C13	C14	0
✓	✓	✓	✓	✓	✓	✓	✓	✓	✓	✓	✓

2894

Throat dia. measurements:

Unit Serial No.	S/N 005	S/N 006	
After (6) 90° Winding:	2,272	2,281	
After cloth/90° Buildup:	2,776	2,792	1194
Excess resin removed without distorting winding			1194
Doublers wound correctly at each end			1194

3. B-Stage and Cure — Operator No.

B-Stage: Time Started 2130 Time Completed 2030 — 3524

Date 12-16-72 — 3524

Cure: Time Started 0015 12-18-72 at 300 °F.

Time Completed 0330 12-18-72 at 310 °F.

Date 12-18-72 — 776

4. Machining and Stripping

Parameter	Actuals			
Unit Identification	S/N 005		S/N 006	
Dimensions Measured	Max.	Min.	Max.	Min.
3.150 + .000 - .010 dia.	3.147		3.148	
2.491 + .000 - .002 dia.	2.4915	2.490	2.490	2.4895
1.922 + .000 - .003 dia.	1.9225	1.922	1.922	1.921
2.731 + .000 - .004 dia.	2.735		2.730	
2.946 ± .010 dia.	2.946	2.938	2.942	2.940
.210 ± .005	.205		.210	

1147

Operator No.

5. Finishing

Coating mixed correctly:

	Ingredient	Weight, grs.	Lot No.	
Adhesive	946 PARTA	50	AAL-10	4123
Catalyst	946 PARTA	7½	AAL-[illegible]	4123
Thinner	ACETONE	40	A[illegible]-25	4125

Cure: Time Started 1[illegible] at 140 °F.

Time Complete 1800 at 140 °F.

Date 12-20-72 399

Clean up work performed satisfactorily. 399

Final Wt.: S/N 005, S/N 006

Wt. 145 gr, Wt. 140 gr 399

Supervisor Review C.O. Bisselli Date 12/20/72

Engineer Review F.L. Rivers Date 12/22/72

Manufacturing & Inspection Record S/N's 007 & ~~008~~

3.0 Dia. x 8.05 lg. Motor Case

Glass Nozzle Fabrication

Dwg. 720608-2

	Operator No.
1. Winding Preparation	
Machine set up installed.	-
Shaft extension T. I. R. .025.	2125
O-rings waxed only.	2125
Mandrel cleaned properly	2125
(4) O-rings and mandrel assembled properly.	2125
Roving (S904, 12-end) installed. Lot No. [illegible].	2125
Roving tension: 1. 7 2. 24 3. 7	2125
2. Winding	
Resin mixed correctly:	2125

	Ingredient	Weight, gms.	Lot No.	
Resin	2256	500	AB127	
Catalyst	TONOX	145	ABL9	2125

Operator

2. Winding (cont.)

Sequence check off:

X	X	X	X	0	0	0	0	0	0	C1	C2	0	C3	C4	0	C5	C6	0
✓	✓	✓	✓	✓	✓	✓	✓	✓	✓	✓	✓	✓	✓	✓	✓	✓	✓	✓

C7	C8	0	C9	C10	0	C11	C12	0	C13	C14	0
✓	✓	✓	✓	✓	✓	✓	✓	✓	✓	✓	✓

786

Throat dia. measurements:

Unit Serial No. S/N 007 S/N 008

After (6) 90° Winding: ~~2.272~~ 2.276

After cloth/90° Buildup: ~~2.276~~ 2.747 2.746 786

RPT 2/15/73

Excess resin removed without distorting winding 786

Doublers wound correctly at each end 786

3. B-Stage and Cure

Operator No.

B-Stage: Time Started 0600 Time Completed 1000 880

Date 2-15-73 880

Cure: Time Started 1000 at 300 °F.

Time Completed 1300 at 300 °F.

Date 2-15-73 885

4. Machining and Stripping

Parameter	Actuals			
Unit Identification	S/N 007		S/N 008	
Dimensions Measured	Max.	Min.	Max.	Min.
3.150 + .000 - .010 dia.	3.148		3.146	
2.491 + .000 - .002 dia.	2.490		2.489	
1.922 + .000 - .003 dia.	1.9215	1.921	1.924	1.921
2.731 + .000 - .004 dia.	2.728		2.7275	
2.946 ± .010 dia.	2.952	2.942	2.950	2.947
.210 ± .005	.209		.208	

1147

Operator No.

5. Finishing

Coating mixed correctly: S/N 007

	Ingredient	Weight, gms.	Lot No.	
Adhesive	946A	50	ABL64	4145
Catalyst	946B	7½	ABL64	4145
Thinner	Acetone	~~50~~ 40	ABL78	4145

Cure: Time Started 2230 at 130 °F.

Time Complete 0630 at 130 °F.

Date 2-20-73 782

Clean up work performed satisfactorily. 776

Final Wt.. S/N 007, S/N ~~008~~

Wt. 149, Wt. 782

Supervisor Review M. Lawson Date 2/20/~~78~~ 73

Engineer Review [illegible] Date 2/20/73

Manufacturing & Inspection Record S/N's 009 & 010

3.0 Dia. x 8.05 lg. Motor Case

Glass Nozzle Fabrication

Dwg. 720608-2

	Operator No.
1. Winding Preparation	
Machine set up installed.	1894
Shaft extension T. I. R. .020.	1894
O-rings waxed only.	1894
Mandrel cleaned properly	1894
(4) O-rings and mandrel assembled properly.	1894
Roving (S904, 12-end) installed. Lot No. FBL 4.	1894
Roving tension: 1. 2 2. 2 3. 2	1894
2. Winding	
Resin mixed correctly:	1894

	Ingredient	Weight, gms.	Lot No.	
Resin	2256	500	FBL 27	
Catalyst	Tonox	145	FBL 9	1894

Operator

2. Winding (cont.)

Sequence check off:

X	X	X	X	0	0	0	0	0	0	C1	C2	0	C3	C4	0	C5	C6	0
✓	✓	✓	✓	✓	✓	✓	✓	✓	✓	✓	✓	✓	✓	✓	✓	✓	✓	✓

C7	C8	0	C9	C10	0	C11	C12	0	C13	C14	0
✓	✓	✓	✓	✓	✓	✓	✓	✓	✓	✓	✓

189f

Throat dia. measurements:

Unit Serial No.	S/N 009	S/N 010
After (6) 90° Winding:	2.282	2.279
After cloth/90° Buildup:	2.815	2.795

189f

Excess resin removed without distorting winding 189f

Doublers wound correctly at each end 189f

3. B-Stage and Cure

Operator No.

B-Stage: Time Started 1440 Time Completed 1840 2125

Date 2-15-73 2125

Cure: Time Started 1845 at 300 °F.

Time Completed 2145 at 300 °F.

Date 2-15-73 2125

4. Machining and Stripping

Parameter	Actuals			
Unit Identification	S/N 009		S/N 010	
Dimensions Measured	Max.	Min.	Max.	Min.
3.150 + .000 - .010 dia.	3.146		3.145	
2.491 + .000 - .002 dia.	2.490		2.490	
1.922 + .000 - .003 dia.	1.925	1.924	1.921	1.9205
2.731 + .000 - .004 dia.	2.729		2.729	
2.946 ± .010 dia.	2.944	2.945	2.947	2.946
.210 ± .005	.205		.207	

1147

Operator No.

5. Finishing

Coating mixed correctly:

	Ingredient	Weight, gms.	Lot No.	
Adhesive	946A	50	ABL64	4145
Catalyst	946B	7½	ABL64	4145
Thinner	ACETONE	40	ABL78	4145

Cure: Time Started 2230 at 130 °F.

Time Complete 0630 at 130 °F.

Date 2-20-73 782

Clean up work performed satisfactorily. _____

Final Wt.: S/N 009, S/N 010

Wt. 149, Wt. 138 782

Supervisor Review [illegible] Date 2/20/73

Engineer Review [illegible] Date [illegible]

Manufacturing & Inspection Record S/N's 011 & 012

3.0 Dia. x 8.05 lg. Motor Case

Glass Nozzle Fabrication

Dwg. 720608-2

	Operator No.
1. Winding Preparation	
Machine set up installed.	626
Shaft extension T. I. R. 019.	786
O-rings waxed only.	243
Mandrel cleaned properly	243
(4) O-rings and mandrel assembled properly.	243
Roving (S904, 12-end) installed. Lot No. AC 4.	786
Roving tension: 1. 2 1/4 2. 2 3. 2 3/4	786

2. Winding

Resin mixed correctly:				786
	Ingredient	Weight, gms.	Lot No.	
Resin	2250	530	AC 27	
Catalyst	TONOX 60/40	145	101 9	786

Operator

2. Winding (cont.)

Sequence check off:

X	X	X	X	0	0	0	0	0	0	C1	C2	0	C3	C4	0	C5	C6	0
✓	✓	✓	✓	✓	✓	✓	✓	✓	✓	✓	✓	✓	✓	✓	✓	✓	✓	✓

C7	C8	0	C9	C10	0	C11	C12	0	C13	C14	0
✓	✓	✓	✓	✓	✓	✓	✓	✓	✓	✓	✓

78

Throat dia. measurements:

Unit Serial No.	S/N 011	S/N 012
After (6) 90° Winding:	2.278	2.277
After cloth/90° Buildup:	2.748	2.762

78

Excess resin removed without distorting winding 78

Doublers wound correctly at each end 78

3. B-Stage and Cure

Operator No.

B-Stage: Time Started 2200 Time Completed 0030 752

Date 3-21-73 782

Cure: Time Started 0045 at 270 °F.

Time Completed 0345 at 300 °F.

Date 3-21-73 782

4. Machining and Stripping

Parameter	Actuals			
Unit Identification	S/N 011		S/N 012	
Dimensions Measured	Max.	Min.	Max.	Min.
3.150 + .000 - .010 dia.	3.1485		3.144	
2.491 + .000 - .002 dia.	2.4875		2.491	
Throat Dia.-Record 1.922 + .000 - .003 dia.	1.923	1.922	1.933	1.9215
2.731 + .000 - .004 dia.	2.729		2.728	
2.946 I.D. Exit Plane-Record	2.954	2.950	2.948	2.946
.210 ± .005	.205		.205	

1147

Reproduced from best available copy.

Operator No.

5. Finishing

Coating mixed correctly:

	Ingredient	Weight, gms.	Lot No.	
Adhesive	946 A	100	ABL 64	786
Catalyst	946 B	.5	ABL 64	786
Thinner	Acetone	80	ABL 78	786

Cure: Time Started 2-23-73 2000 at ~~[illegible]~~ 75° °F. 2-23-73

Time Complete 2-26-73 0030 at 75° °F.

Date 2/26/73 4210

Clean up work performed satisfactorily. 4210

Final Wt.: S/N 011, S/N 012

Wt. 140 gms, Wt. 134 gms 4210

Supervisor Review [signature] Date 4/26/73

Engineer Review [signature] Date 2/26/73

Manufacturing & Inspection Record S/N's 013 & ~~[illegible]~~

3.0 Dia. x 8.05 lg. Motor Case

Glass Nozzle Fabrication

Dwg. 720608-2

	Operator No.
1. Winding Preparation	
Machine set up installed.	8LC
Shaft extension T. I. R. .018.	786
O-rings waxed only.	786
Mandrel cleaned properly	786
(4) O-rings and mandrel assembled properly.	786
Roving (5904, 12-end) installed. Lot No. AR-4.	4211
Roving tension: 1. 2.0 2. 2.0 3. 2.0	786
2. Winding	
Resin mixed correctly:	4211

	Ingredient	Weight, grs.	Lot No.	
Resin	1256	500	AR-27	
Catalyst	Tonox	145	AR-3	4211

Operator

2. Winding (cont.)

Sequence check off:

X	X	X	X	0	0	0	0	0	0	C1	C2	0	C3	C4	0	C5	C6	0
✓	✓	✓	✓	✓	✓	✓	✓	✓	✓	✓	✓	✓	✓	✓	✓	✓	✓	✓

C7	C8	0	C9	C10	0	C11	C12	0	C13	C14	0
✓	✓	✓	✓	✓	✓	✓	✓	✓	✓	✓	✓

786

Throat dia. measurements:

Unit Serial No. S/N 013 S/N ~~014~~ 1/pu

After (6) 90° Winding: 2.240 2.279

After cloth/90° Buildup: 2.772 2.762 786

Excess resin removed without distorting winding 786

Doublers wound correctly at each end 786

3. B-Stage and Cure

Operator No.

B-Stage: Time Started 2145 Time Completed 0045 1894

Date 2-23-73 1894

Cure: Time Started 0100 at 300 °F.

Time Completed ~~[illegible]~~ 0400 at 300 °F.

RD 2-23-73

Date 2-23-73 1894

4. Machining and Stripping

Parameter	Actuals			
Unit Identification	S/N 013		S/N ~~014~~	
Dimensions Measured	Max.	Min.	Max.	Min.
3.150 + .000 - .010 dia.	3.149		3.147	
2.491 + .000 - .002 dia.	2.491		2.489	
Throat Dia.-Record 1.922 + .000 - .003 dia.	1.923	1.9225	1.9245	1.924
2.731 + .000 - .004 dia.	2.729		2.730	
2.946 I.D. Exit Plane-Record	2.953	2.948	2.958	2.954
.210 ± .005	.206		.205	

1147

Reproduced from best available copy.

Operator No.

5. Finishing

Coating mixed correctly:

	Ingredient	Weight, gms.	Lot No.	
Adhesive	946A	100	ABL 64	786
Catalyst	946B	15	ABL 64	786
Thinner	Acetone	80	ABL 78	786

Cure: Time Started 2-27-73 2000 at ~~[illegible]~~ 75° °F. 2-27-73

Time Complete 2/26/73 0030 at 75° °F.

Date 2/26/73 4210

Clean up work performed satisfactorily. 4210

Final Wt.: S/N 013, S/N ~~014~~

Wt. 134 gms, Wt. _____ 4210

Supervisor Review _____ Date 2/26/73

Engineer Review _____ Date 2/26/73

Manufacturing & Inspection Record S/N's 015 & 016

3.0 Dia. x 8.05 lg. Motor Case

Glass Nozzle Fabrication

Dwg. 720608-2

Operator

1. Winding Preparation

Machine set up installed. 726

Shaft extension T. I. R. .020. 2125

O-rings waxed only. 2125

Mandrel cleaned properly 4223

(4) O-rings and mandrel assembled properly. 4223

Roving (S904, 12-end) installed. Lot No. ABL 4. 2125

Roving tension: 1. 2 2. 2 3. 2 2125

2. Winding

Resin mixed correctly: 4223

	Ingredient	Weight, gms.	Lot No.	
Resin	ABL 2256	500	ABL 27	
Catalyst	Tonex 6/10	145	ABL 8	423

Operator

2. Winding (cont.)

Sequence check off:

X	X	X	X	0	0	0	0	0	0	C1	C2	0	C3	C4	0	C5	C6	0
✓	✓	✓	✓	✓	✓	✓	✓	✓	✓	✓	✓	✓	✓	✓	✓	✓	✓	✓
				✓	✓	✓	✓	✓	✓	✓	✓	✓	✓	✓	✓	✓	✓	✓

C7	C8	0	C9	C10	0	C11	C12	0	C13	C14	0
✓	✓	✓	✓	✓	✓	✓	✓	✓	✓	✓	✓
✓	✓	✓	✓	✓	✓	✓	✓	✓	✓	✓	✓

786

Throat dia. measurements:

Unit Serial No.	S/N 015	S/N 016	
After (6) 90° Winding:	2.282	2.281	
After cloth/90° Buildup:	2.765	2.772	786
Excess resin removed without distorting winding			786
Doublers wound correctly at each end			786

3. B-Stage and Cure — Operator No.

B-Stage: Time Started 2045 Time Completed 0100 1894

Date 2-28-73 1894

Cure: Time Started 0115 at 235 °F.

Time Completed 0430 at 300 °F.

Date 2-28-73 1894

4. Machining and Stripping

Parameter	Actuals			
Unit Identification	S/N 015		S/N 016	
Dimensions Measured	Max.	Min.	Max.	Min.
3.150 + .000 - .010 dia.	3.146		3.1475	
2.491 + .000 - .002 dia.	2.489		2.490	
Throat Dia.-Record 1.922 + .000 - .003 dia.	1.923	1.922	1.9235	1.923
2.731 + .000 - .004 dia.	2.731		2.731	
2.946 I.D. Exit Plane-Record	2.946	2.945	2.951	2.949
.210 ± .005	.211		.210	

1147

Operator No.

5. Finishing

Coating mixed correctly:

	Ingredient	Weight, gms.	Lot No.	
Adhesive	946 A	50	ABL-64	832
Catalyst	946 B	7½	ABL-64	832
Thinner	ACETONE	40	ABL-78	832

Cure: Time Started 1545 at 134 °F.

Time Complete 23[illegible] at 140 °F.

Date 3/4/2[illegible] 669

Clean up work performed satisfactorily. 3924

Final Wt.: S/N 015, S/N 016

Wt. 141, Wt. 141 782

Supervisor Review [illegible] Date 3/6/23

Engineer Review _____ Date _____

Manufacturing & Inspection Record S/N's 017 & 018

3.0 Dia. x 8.0L lg. Motor Case

Glass Nozzle Fabrication

Dwg. 720608-2

	Operator No.
1. Winding Preparation	
Machine set up installed.	394
Shaft extension T. I. R. 1.120.	786
O-rings waxed only.	669
Mandrel cleaned properly	669
(4) O-rings and mandrel assembled properly.	669
Roving (S904, 12-end) installed. Lot No. [illegible]	786
Roving tension: 1. 2 2. 2 3. 2	786
2. Winding	
Resin mixed correctly:	786

	Ingredient	Weight, gms.	Lot No.	
Resin	[illegible]	[illegible]	[illegible]	
Catalyst	[illegible]	145	[illegible]	786

Operator

2. Winding (cont.)

Sequence check off:

X	X	X	X	0	0	0	0	0	0	C1	C2	0	C3	C4	0	C5	C6	0
✓	✓	✓	✓	✓	✓	✓	✓	✓	✓	✓	✓	✓	✓	✓	✓	✓	✓	✓
				✓	✓	✓	✓	✓	✓	✓	✓	✓	✓	✓	✓	✓	✓	✓

C7	C8	0	C9	C10	0	C11	C12	0	C13	C14	0
✓	✓	✓	✓	✓	✓	✓	✓	✓	✓	✓	✓
✓	✓	✓	✓	✓	✓	✓	✓	✓	✓	✓	✓

786

Throat dia. measurements:

Unit Serial No.	S/N 017	S/N 018
After (6) 90° Winding:	2.274	2.272
After cloth/90° Buildup:	2.760	2.766

746

Excess resin removed without distorting winding 786

Doublers wound correctly at each end 1891

3. B-Stage and Cure — Operator No.

B-Stage: Time Started 0100 Time Completed 0400 — 1894

Date 2-28-73 — 1894

Cure: Time Started 0430 at 300 °F.

Time Completed 0730 at 300 °F.

Date 2-28-73 — 1894

4. Machining and Stripping

Parameter	Actuals			
Unit Identification	S/N 017		S/N 018	
Dimensions Measured	Max.	Min.	Max.	Min.
3.150 + .000 - .010 dia.	3.147		3.1455	
2.491 + .000 - .002 dia.	2.490		2.4895	
Throat Dia.-Record 1.922 + .000 - .003 dia.	1.923	1.9225	1.9245	1.9245
2.731 + .000 - .004 dia.	2.727		2.7275	
2.946 I.D. Exit Plane-Record	2.947	2.945	2.943	2.942
.210 ± .005	.207		.205	

1147

Operator No.

5. Finishing

Coating mixed correctly:

	Ingredient	Weight, gms.	Lot No.	
Adhesive	946 A	50	ABL-64	832
Catalyst	946 B	7½	ABL-64	832
Thinner	ACETONE	40	ABL-78	832

Cure: Time Started 1545 at 134 °F.

Time Complete 2345 at 140 °F.

Date 3/1/73 669

Clean up work performed satisfactorily. 3924

Final Wt.: S/N 017, S/N 018

Wt. 135, Wt. 136 752

Supervisor Review [signature] Date 3/3/73

Engineer Review _____ Date _____

Manufacturing & Inspection Record S/N's 019 & 020

3.0 Dia. x 8.05 lg. Motor Case

Glass Nozzle Fabrication

Dwg. 720608-2

	Operator No.
1. Winding Preparation	
Machine set up installed.	226
Shaft extension T. I. R. .025.	2125
O-rings waxed only.	2125
Mandrel cleaned properly	2125
(4) O-rings and mandrel assembled properly.	2125
Roving (S904, 12-end) installed. Lot No. AB15.	2125
Roving tension: 1. 2 2. 1½ 3. 2	2125
2. Winding	
Resin mixed correctly:	2125

	Ingredient	Weight, gms.	Lot No.	
Resin	2054	100	AB627	
Catalyst	Tonox	29	AB628	2125

Operator

2. Winding (cont.)

Sequence check off:

X	X	X	X	0	0	0	0	0	0	C1	C2	0	C3	C4	0	C5	C6	0
✓	✓	✓	✓	✓	✓	✓	✓	✓	✓	✓	✓	✓	✓	✓	✓	✓	✓	✓

C7	C8	0	C9	C10	0	C11	C12	0	C13	C14	0
✓	✓	✓	✓	✓	✓	✓	✓	✓	✓	✓	✓

2125

Throat dia. measurements:

Unit Serial No.	S/N 019	S/N 020	
After (6) 90° Winding:	2.275	2.272	
After cloth/90° Buildup:	2.750	2.750	2125
Excess resin removed without distorting winding			2125
Doublers wound correctly at each end			2125

3. B-Stage and Cure — Operator No.

B-Stage: Time Started 1500 Time Completed 1830 786

Date 3-2-73 786

Cure: Time Started 1900 at 285 °F.

Time Completed 2200 at 300 °F.

Date 3-2-73 786

4. Machining and Stripping

Parameter	Actuals			
Unit Identification	S/N 019		S/N 020	
Dimensions Measured	Max.	Min.	Max.	Min.
3.150 + .000 - .010 dia.	3.145		3.149	
2.491 + .000 - .002 dia.	2.490		2.490	
Throat Dia.-Record 1.922 + .000 - .002 dia.	1.922	1.921	1.921	1.922
2.731 + .000 - .004 dia.	2.729	2.725	2.729	2.725
2.946 I.D. Exit Plane-Record	2.950	2.940	2.940	2.935
.210 ± .005	.212		.210	

1147

Reproduced from best available copy.

Operator No.

5. **Finishing**

Coating mixed correctly:

	Ingredient	Weight, gms.	Lot No.	
Adhesive	Epon 828A	50.0	0BL-60	782
Catalyst	Epon 828B	7.5	0BL-60	782
Thinner	Acetone	40.0	0BL-78	782

Cure: Time Started 1630 at 130 °F.

Time Complete 0030 at 130 °F.

Date 3/6/73 776

Clean up work performed satisfactorily. 3924

Final Wt.: S/N 019, S/N 020

Wt. 136 GRAMS, Wt. 135 GRAMS 880 - 4211

Supervisor Review [signature] Date 3/6/73

Engineer Review _____ Date _____

Manufacturing & Inspection Record S/N's 021 & 022

3.0 Dia. x 8.05 lg. Motor Case

Glass Nozzle Fabrication

Dwg. 720608-2

	Operator No.
1. Winding Preparation	
Machine set up installed.	3970
Shaft extension T. I. R. .029 .	786
O-rings waxed only.	786
Mandrel cleaned properly	786
(4) O-rings and mandrel assembled properly.	786
Roving (S904, 12-end) installed. Lot No. AAC 5 .	786
Roving tension: 1. 2¼ 2. 2¼ 3. 2	786
2. Winding	
Resin mixed correctly:	786

	Ingredient	Weight, ozs.	Lot No.	
Resin	2256	500	AAC 27	
Catalyst	Tonox 60/40	145	AAC 8	786

Operator

2. Winding (cont.)

Sequence check off:

X	X	X	X	0	0	0	0	0	0	C1	C2	0	C3	C4	0	C5	C6	0
✓	✓	✓	✓	✓	✓	✓	✓	✓	✓	✓	✓	✓	✓	✓	✓	✓	✓	✓

C7	C8	0	C9	C10	0	C11	C12	0	C13	C14	0
✓	✓	✓	✓	✓	✓	✓	✓	✓	✓	✓	✓

TAB

Throat dia. measurements:

Unit Serial No.	S/N 021	S/N 022	
After (4) 90° Winding:	2.271	2.273	
After cloth/90° Buildup:	2.755	2.760	TAB
Excess resin removed without distorting winding			TAB
Doublers wound correctly at each end			TAB

3. B-Stage and Cure — Operator No.

B-Stage: Time Started 1545 Time Completed 1915 782

Date 3-5-73 782

Cure: Time Started 1930 at 255 °F.

Time Completed 2230 at 300 °F.

Date 3-5-73 782

4. Machining and Stripping

Parameter	Actuals			
Unit Identification	S/N 021		S/N 022	
Dimensions Measured	Max.	Min.	Max.	Min.
3.150 + .000 - .010 dia.	3.147		3.148	
2.491 + .000 - .002 dia.	2.490		2.490	
Throat Dia.-Record 1.922 + .000 - .003 dia.	1.9235	1.923	1.925	1.9245
2.731 + .000 - .004 dia.	2.728		2.728	
2.946 I.D. Exit Plane-Record	2.951	2.949	2.956	2.954
.210 ± .005	.210		.208	

1147

Operator No.

5. Finishing

Coating mixed correctly:

	Ingredient	Weight, gms.	Lot No.	
Adhesive	941 PART-A	50 gms	ABL-66	4125
Catalyst	941 PART-B	7½ gms	ABL-66	4125
Thinner	ACETONE	40 gms	ABL-678	4125

Cure: Time Started 0150 at 1500 °F.

Time Complete 1100 at 130 °F.

Date 3-25-73 782

Clean up work performed satisfactorily. 782

Final Wt.: S/N 021, S/N 022

Wt. 140 Gms, Wt. 139 Gms 782

Supervisor Review [signature] Date [illegible]

Engineer Review [signature] Date [illegible]

Manufacturing & Inspection Record S/N's 023 & 024

3.0 Dia. x 8.05 lg. Motor Case

Glass Nozzle Fabrication

Dwg. 720608-2

Operator No.

1. Winding Preparation

Machine set up installed. 3970

Shaft extension T. I. R. .013. 1894

O-rings waxed only. 1894

Mandrel cleaned properly 1894

(4) O-rings and mandrel assembled properly. 1894

Roving (S904, 12-end) installed. Lot No. ABL 5. 1894

Roving tension: 1. 2 1/4 2. 2 3. 2 1894

2. Winding

Resin mixed correctly: 1894

	Ingredient	Weight, gms.	Lot No.	
Resin	2256	100	ABL 27	
Catalyst	[illegible]	29	ABL 9	1894

Operator

2. Winding (cont.)

Sequence check off:

X	X	X	X	0	0	0	0	0	0	C1	C2	0	C3	C4	0	C5	C6	0
✓	✓	✓	✓	✓	✓	✓	✓	✓	✓	✓	✓	✓	✓	✓	✓	✓	✓	✓

C7	C8	0	C9	C10	0	C11	C12	0	C13	C14	0
✓	✓	✓	✓		✓	✓	✓	✓	✓	✓	✓

4/69

Throat dia. measurements:

Unit Serial No. S/N 023 S/N 024

After (6) 90° Winding: 2.269 2.275

After cloth/90° Buildup: 2.750 2.748 4/69

Excess resin removed without distorting winding 4/69

Doublers wound correctly at each end 4/69

3. B-Stage and Cure

Operator No.

B-Stage: Time Started 2140 Time Completed 0170 786

Date 3-21-73 786

Cure: Time Started 0145 at 285 °F.

Time Completed 0445 at 300 °F.

Date 3-21-73 786

4. Machining and Stripping

Parameter	Actuals			
Unit Identification	S/N 023		S/N 024	
Dimensions Measured	Max.	Min.	Max.	Min.
3.150 + .000 - .010 dia.	3.148		3.147	
2.491 + .000 - .002 dia.	2.490		2.490	
Throat Dia.-Record 1.922 + .000 - .003 dia.	1.9235	1.9225	1.9235	1.923
2.731 + .000 - .004 dia.	2.729		2.728	
2.945 I.D. Exit Plane-Record	2.948	2.947	2.953	2.951
.210 ± .005	.209		.215	

1147

Operator No.

5. **Finishing**

Coating mixed correctly:

	Ingredient	Weight, gms.	Lot No.	
Adhesive	946-[illegible]-A	50 gms	ABL-16	4128
Catalyst	946-[illegible]-B	7½ gms	ABL-66	4128
Thinner	ACETONE	40 gms	ABL-78	4128

Cure: Time Started 3-29-73 0330 at 130 °F.

Time Complete 1100 at 130 °F.

Date 3-29-73 782

Clean up work performed satisfactorily. 782

Final Wt.: S/N 023, S/N 024

Wt. 137 Gms, Wt. 141 Gms 782

Supervisor Review [signature] Date 3/29/73

Engineer Review [signature] Date 3/29/73

Manufacturing & Inspection Record S/N's 025 & 026

3.0 Dia. x 8.05 lg. Motor Case

Glass Nozzle Fabrication

Dwg. 720608-2

	Operator No.
1. Winding Preparation	
Machine set up installed.	[illegible]
Shaft extension T. I. R. C14.	[illegible]
O-rings waxed only.	[illegible]
Mandrel cleaned properly	[illegible]
(4) O-rings and mandrel assembled properly.	[illegible]
Roving (S904, 12-end) installed. Lot No. [illegible].	[illegible]
Roving tension: 1. [illegible] 2. [illegible] 3. [illegible]	[illegible]
2. Winding	
Resin mixed correctly:	[illegible]

	Ingredient	Weight, gms.	Lot No.	
Resin	[illegible]	[illegible]	[illegible]	
Catalyst	[illegible]	[illegible]	[illegible]	[illegible]

Operator

2. Winding (cont.)

Sequence check off:

X	X	X	X	0	0	0	0	0	0	C1	C2	0	C3	C4	0	C5	C6	0
✓	✓	✓	✓	✓	✓	✓	✓	✓	✓	✓	✓	✓	✓	✓	✓	✓	✓	✓

C7	C8	0	C9	C10	0	C11	C12	0	C13	C14	0
✓	✓	✓	✓	✓	✓	✓	✓	✓	✓	✓	✓

1814

Throat dia. measurements:

Unit Serial No S/N 025 S/N 026

After (6) 90° Winding: 2.775 2.768

After cloth/90° Buildup: 2.755 2.765 [illegible]

Excess resin removed without distorting winding [illegible]

Doublers wound correctly at each end 832

3. B-Stage and Cure

Operator No.

B-Stage: Time Started 0930 Time Completed 1240 4168

Date 4-4-73 4168

Cure: Time Started 1250 at 300 °F.

Time Completed 1535 at 300 °F.

Date 4/4/73 4168

4. Machining and Stripping

Parameter	Actuals			
Unit Identification	S/N 025		S/N 026	
Dimensions Measured	Max.	Min.	Max.	Min.
3.150 + .000 - .010 dia.	3.147		3.146	
2.491 + .000 - .002 dia.	2.490		2.491	
Throat Dia.-Record 1.922 + .000 - .003 dia.	1.9235	1.923	1.923	1.9225
2.731 + .000 - .004 dia.	2.729		2.729	
2.946 I.D. Exit Plane-Record	2.942	2.941	2.941	2.940
.210 ± .005	.209		.210	

1147

Best Available Copy

Operator No.

5. Finishing

Coating mixed correctly:

	Ingredient	Weight, gms.	Lot No.	
Adhesive	946 A	60	ABL 60	4168
Catalyst	946 B	7½	ABL 68	4168
Thinner	ACETONE	40	ABL 69	4168

Cure: Time Started 1300 4/5/73 at 130 °F.

Time Complete 2100 at 130 °F.

Date 4-5-73 [illegible]

Clean up work performed satisfactorily. 669

Final Wt.: S/N 025, S/N 026

Wt. 1328 gms, Wt. 1413 gms 669

Supervisor Review [signature] Date [illegible]

Engineer Review _____ Date _____

Manufacturing & Inspection Record S/N's 027 & 028

3.0 Dia. x 8.05 lg. Motor Case

Glass Nozzle Fabrication

Dwg. 720608-2

	Operator No.
1. Winding Preparation	
Machine set up installed.	776
Shaft extension T. I. R. .0034.	776
O-rings waxed only.	4211
Mandrel cleaned properly	4211
(4) O-rings and mandrel assembled properly.	4211
Roving (S994, 12-end) installed. Lot No. AB/5.	786
Roving tension: 1. 2# 2. 2# 3. 2#	4211

2. Winding

Resin mixed correctly: 286

	Ingredient	Weight, gms.	Lot No.	
Resin	826	100	AB/37	
Catalyst	Tonox 60/40	20	AB/9	286

Operator

2. Winding (cont.)

Sequence check off:

X	X	X	X	0	0	0	0	0	0	C1	C2	0	C3	C4	0	C5	C6	0
✓	✓	✓	✓	✓	✓	✓	✓	✓	✓	✓	✓	✓	✓	✓	✓	✓	✓	✓
–	–	–	–	–	–	–	–	–	–	–	–	–	–	–	–	–	–	–

C7	C8	0	C9	C10	0	C11	C12	0	C13	C14	0
✓	✓	✓	✓	✓	✓	✓	✓	✓	✓	✓	✓
–	–	–	–	–	–	–	–	–	–	–	–

4211
1894

Throat dia. measurements:

Unit Serial No.	S/N 027	S/N 028
After (6) 90° Winding:	2.278	2.276
After cloth/90° Buildup:	2.760	2.750

1894

Excess resin removed without distorting winding 1894

Doublers wound correctly at each end 1894

3. B-Stage and Cure — Operator No.

B-Stage: Time Started 0330 Time Completed 0630 1171

Date 4-5-73 1844

Cure: Time Started 0645 at 285 °F.

Time Completed 745 at 300 °F.

Date 4/5/73 4168

4. Machining and Stripping

Parameter	Actuals			
Unit Identification	S/N 027		S/N 028	
Dimensions Measured	Max.	Min.	Max.	Min.
3.150 + .000 - .010 dia.	3.150	3.149	3.150	3.1488
2.491 + .000 - .002 dia.	2.491	2.491	2.491	2.4899
Throat Dia.-Record 1.922 + .000 - .003 dia.	1.922	1.921	1.924	1.924
2.731 + .000 - .004 dia.	2.731	2.731	2.731	2.7305
2.946 I.D. Exit Plane-Record	2.946	2.946	2.947	2.945
.210 ± .005	.210	.210	.210	.210

U006A

Operator No.

5. Finishing

Coating mixed correctly:

	Ingredient	Weight, gms.	Lot No.	
Adhesive	[illegible]	[illegible]	[illegible]	4210
Catalyst	[illegible]	7½	[illegible]	4210
Thinner	[illegible]	[illegible]	[illegible]	4210

Cure: Time Started [illegible] 4/19/73 at [illegible] °F.

Time Complete [illegible] at 75° °F.

Date 4-24-73 2125

Clean up work performed satisfactorily. 2125

Final Wt.: S/N 027, S/N 028

Wt. 138.9 gms, Wt. 139.1 gms 2125

Supervisor Review M Lessue Date 4/24/73

Engineer Review _____ Date _____

Manufacturing & Inspection Record S/N's 029 & 030

3.0 Dia. x 8.05 lg. Motor Case

Glass Nozzle Fabrication

Dwg. 720608-2

	Operator No.
1. Winding Preparation	
Machine set up installed.	776
Shaft extension T. I. R. .024.	786
O-rings waxed only.	4211
Mandrel cleaned properly	4211
(4) O-rings and mandrel assembled properly.	4211
Roving (S904, 12-end) installed. Lot No. ABC 5.	4211
Roving tension: 1. 2 oz 2. 2 oz 3. 2 oz	4211

2. Winding

Resin mixed correctly: 4211

	Ingredient	Weight, gms.	Lot No.	
Resin	3256	700	27	
Catalyst	Tenox	29	9	4211

Operator

2. Winding (cont.)

Sequence check off:

X	X	X	X	0	0	0	0	0	0	C1	C2	0	C3	C4	0	C5	C6	0
✓	✓	✓	✓	✓	✓	✓	✓	✓	✓	✓	✓	✓	✓	✓	✓	✓	✓	✓
				✓	✓	✓	✓	✓	✓	✓	✓	✓	✓	✓	✓	✓	✓	✓

C7	C8	0	C9	C10	0	C11	C12	0	C13	C14	0
✓	✓	✓	✓	✓	✓	✓	✓	✓	✓	✓	✓
✓	✓	✓	✓	✓	✓	✓	✓	✓	✓	✓	✓

4211
4211

Throat dia. measurements:

Unit Serial No.	S/N 029	S/N 030	
After (6) 90° Winding:	2.279	2.279	
After cloth/90° Buildup:	2.779	2.761	4211
Excess resin removed without distorting winding			786
Doublers wound correctly at each end			1891

3. B-Stage and Cure — Operator No.

B-Stage: Time Started 0045 Time Completed 0500 — 782

Date 4-6-73 — 782

Cure: Time Started 0515 at 290 °F.

Time Completed 0815 at 290 °F.

Date 4-6-73 — 832

4. Machining and Stripping

Parameter	Actuals			
Unit Identification	S/N 029		S/N 030	
Dimensions Measured	Max.	Min.	Max.	Min.
3.150 + .000 - .010 dia.	3.150	3.1495	3.149	3.1485
2.491 + .000 - .002 dia.	2.491	2.4905	2.491	2.4905
Throat Dia.-Record 1.922 + .000 - .003 dia.	1.922	1.9215	1.922	1.9215
2.731 + .000 - .004 dia.	2.731	2.731	2.731	2.731
2.946 I.D. Exit Plane-Record	2.946	2.945	2.947	2.946
.210 ± .005	.210	.210	.210	.210

U0064

Operator No.

5. Finishing

Coating mixed correctly:

	Ingredient	Weight, gms.	Lot No.	
Adhesive	946 A	50	[illegible]	4210
Catalyst	946 B	7 1/4	[illegible]	4210
Thinner	[illegible]	40	[illegible]	[illegible]

Cure: Time Started [illegible] 4/20/73 at 75 °F.

Time Complete 0230 4/20/73 at 75 °F.

Date 4-20-73 2125

Clean up work performed satisfactorily. 2125

Final Wt.: S/N 029, S/N 030

Wt. 142.3 gms., Wt. 139.2 gms 2125

Supervisor Review M. Lemure Date 4/24/73

Engineer Review _____ Date _____

Reproduced from best available copy.