AD-760 104

EDUCATIONAL TECHNOLOGY PROGRAM

Frederick C. Frick

Massachusetts Institute of Technology

Prepared for:

Electronics Systems Division
Advanced Research Projects Agency

15 March 1973

DISTRIBUTED BY:

NTIS

National Technical Information Service
U. S. DEPARTMENT OF COMMERCE
5285 Port Royal Road, Springfield Va. 22151

UNCLASSIFIED

Security Classification

DOCUMENT CONTROL DATA – R&D

(Security classification of title, body of abstract and indexing annotation must be entered when the overall report is classified)

1. ORIGINATING ACTIVITY *(Corporate author)* Lincoln Laboratory, M.I.T.	2a. REPORT SECURITY CLASSIFICATION Unclassified 2b. GROUP None

3. REPORT TITLE

Educational Technology Program

4. DESCRIPTIVE NOTES *(Type of report and inclusive dates)*

Quarterly Technical Summary, 1 December 1972 through 28 February 1973

5. AUTHOR(S) *(Last name, first name, initial)*

Frick, Frederick C.

6. REPORT DATE 15 March 1973	7a. TOTAL NO. OF PAGES 16	7b. NO. OF REFS None

8a. CONTRACT OR GRANT NO. F19628-73-C-0002 b. PROJECT NO. 649L c. ARPA Order 2146 d.	9a. ORIGINATOR'S REPORT NUMBER(S) Educational Technology Program QTS, 15 March 1973 9b. OTHER REPORT NO(S) *(Any other numbers that may be assigned this report)* ESD-TR-73-75

10. AVAILABILITY/LIMITATION NOTICES

Approved for public release; distribution unlimited.

11. SUPPLEMENTARY NOTES None	12. SPONSORING MILITARY ACTIVITY Air Force Systems Command, USAF Advanced Research Projects Agency, Department of Defense

13. ABSTRACT

Work during this quarter has been concentrated on the implementation of a series of experimental design studies. These studies involve alternative audio readers, x-y positioning schemes, and fiche manipulation systems; they will supply data on which to base decisions regarding the subsystems that will make up LTS-4. It has been determined that the proposed self processor for LTS-4 is capable of complete reduction of the raw data stored on the film, and that the film data channel is more than adequate for our requirements.

Considerable effort has gone into the development and evaluation of student performance data. Three data summaries: (1) the exact path of each student, (2) the distribution of frame transfers at each frame, and (3) the time per frame, have proved particularly valuable for lesson analysis and the evaluation of alternative instructional strategies.

14. KEY WORDS

educational technology Lincoln Training System (LTS)	microfiche production computer-aided instruction (CAI)

AD-760 104

Quarterly Technical Summary

Educational Technology Program

15 March 1973

Issued 23 April 1973

Reproduced by
NATIONAL TECHNICAL
INFORMATION SERVICE
U S Department of Commerce
Springfield VA 22151

Prepared for the Department of the Air Force
and the Advanced Research Projects Agency
under Electronic Systems Division Contract F19628-73-C-0002 by

Lincoln Laboratory

MASSACHUSETTS INSTITUTE OF TECHNOLOGY

LEXINGTON, MASSACHUSETTS

Approved for public release; distribution unlimited.

DDC
RECEIVED
MAY 31 1973

15

The work reported in this document was performed at Lincoln Laboratory, a center for research operated by Massachusetts Institute of Technology. This work was sponsored in part by the Department of the Air Force under Contract F19628-73-C-0002 and in part by the Advanced Research Projects Agency of the Department of Defense under Contract F19628-73-C-0002 (ARPA Order 2146).

This report may be reproduced to satisfy needs of U.S. Government agencies.

Non-Lincoln Recipients

PLEASE DO NOT RETURN

Permission is given to destroy this document when it is no longer needed.

ABSTRACT

Work during this quarter has been concentrated on the implementation of a series of experimental design studies. These studies involve alternative audio readers, x-y positioning schemes, and fiche manipulation systems; they will supply data on which to base decisions regarding the subsystems that will make up LTS-4. It has been determined that the proposed self processor for LTS-4 is capable of complete reduction of the raw data stored on the film, and that the film data channel is more than adequate for our requirements.

Considerable effort has gone into the development and evaluation of student performance data. Three data summaries: (1) the exact path of each student, (2) the distribution of frame transfers at each frame, and (3) the time per frame, have proved particularly valuable for lesson analysis and the evaluation of alternative instructional strategies.

15 March 1973

F.C. Frick
Program Manager

Accepted for the Air Force
Joseph J. Whelan
Acting Chief, Lincoln Laboratory Project Office

CONTENTS

	Abstract	iii
	Organization	vi
I.	Applications Research for the Lincoln Training System	1
	A. Final LTS-3 Keesler Results: Two Students at a Terminal	1
	B. Data Summaries for Lesson Validation	1
	C. LTS Simulation Study	2
II.	LTS-4 Hardware Development	2
	A. Fiche Selector/Reader Breadboard	3
	B. Alignment of Rotating Dove Prism	4
	C. Alternate x-y Positioning System	4
	D. Pin-Registration Experiment	5
	E. Rotating Microscope Reader System	7
	F. Self Processor/Data Modem Tests	7
	G. Data Channel Experiments	9

Preceding page blank

ORGANIZATION

EDUCATIONAL TECHNOLOGY PROGRAM

PROGRAM MANAGER

F. C. Frick

DIVISION 2

Technical Staff	Assistants	Technicians
Brown, J. R.	Gagnon, J. V.	Delsie, J. V.
Butman, R. C.	Hallowell, L. F.	Edman, E. W.
Goodman, L. M.	Pugh, Barbara K.	Johnson, P. J.
Grossberg, M.	Ray, D. J.	Ritchie, J. R.
Harris, W. P.		
Karp, D.		
LaFrey, R. R.		Photographer
Mayer, R.		
McLaughlin, A. J.		Recke, R. F.

EDUCATIONAL TECHNOLOGY PROGRAM

I. APPLICATIONS RESEARCH FOR THE LINCOLN TRAINING SYSTEM

A. Final LTS-3 Keesler Results: Two Students at a Terminal

More students could be trained, for a lower cost, if two students worked together at each LTS terminal. The feasibility of training paired students, with lessons that provide feedback and remediation based on only one student's response, was studied recently at the Keesler School for Applied Aerospace Sciences.

Except for the pairing procedure, six student pairs in each of four achievement groups, the methodology was the same as in the earlier field trials of the LTS at Keesler. Students in the lower 80 percent of their class entering the fifth week of the ATC Standard Electronics Principles Course were classified and matched in terms of their scores on the achievement test for the preceding block of conventional instruction. Although students studied as a team, they were tested separately.

The results are summarized in Table I. The data show that training time declines and test scores increase with achievement level, as expected. Averages for pairs here and for singles in a prior study are also shown. There are two factors that make a direct comparison of the numbers a little tenuous, i.e., the difference in sampling procedures, stratified versus random, and the difference in dates of sampling student flow, middle versus end of last year. Nonetheless, it is probably quite safe to conclude that pairs are at least as rapid and learn as much as singles within practical margins of error.

TABLE I

PERFORMANCE OF STUDENT PAIRS ON LTS

Group	Achievement Level (percent)	Training Time (hours)	Test Scores (percent)
I	<69	15.9	72
II	69-80	18.2	81
III	81-91	13.4	80
IV	>91	12.7	92
Pairs		15.0	80
Singles		18.9	77

B. Data Summaries for Lesson Validation

It is accepted in the field of programmed instruction that not all of a lesson's faults can be detected by careful editing before the lesson is tried with students. Most serious are the faults which reflect erroneous assumptions about the students' abilities. These faults can be costly if they are responsible for student confusion and a prolongation of training time.

To aid the authors of LTS lessons in determining where revision is needed, student performance data are collected while students interact with a lesson, and the data are later reduced and summarized. An effort has been made to provide summaries which permit detection of student difficulties. Thus far, three types of information have been found to be useful by the

instructors at the Keesler School for Applied Aerospace Sciences: (1) the exact path of each student, (2) the distribution of frame transfers at each frame, and (3) the time per frame. The transfer and time measures are taken for each student and gathered into group distributions as well.

These data summaries are useful for lesson analysis. For example, consider a frame that requires calculation of the true power of a circuit. The student enters a numerical response in the computer. He then selects the appropriate unit of measurement from among four alternatives: (1) watts, (2) milliwatts, (3) volt-amperes, or (4) millivolt-amperes. If students have difficulty, they are observed to spend a long time on this frame. They make various kinds of errors, e.g., selecting volt-amperes when true power is asked for. If they are confused about the relationship between the problem frame and the response-produced feedback frame, they use the BACK key to re-access the problem. In an obvious way, the three kinds of data summaries reveal characteristics of individual and group performance of this kind.

In addition to the role that performance data play in lesson revision, the data provide information about the relative effectiveness of different instructional strategies. We have observed, for example, that students tend to select exercises whenever they are offered, regardless of how well the students are performing up to that point. This result suggests, for example, that a means for causing better students to avoid the extra work is needed. Thus, the findings are relevant to the implementation of instructional objectives.

C. LTS Simulation Study

Work has been completed on a study of LTS as a task simulator in training. A final report is in preparation.

II. LTS-4 HARDWARE DEVELOPMENT

The microfiche selector/reader breadboard was completed during this quarter. A description of the selector/reader system is contained in the Quarterly Technical Summary of 15 September 1972, and the details referred to in this report are shown in Fig. 2 of that report. The microfiche card handling mechanism does not permit coarse open-loop positioning of the microfiche to the accuracy required by the reader. A redesign of the fiche handling subsystem has been completed, and components are being fabricated.

The reader subsystem breadboard has been evaluated, and modifications to the film gate, vernier x-y positioning system, and illumination system must be completed before tests are initiated.

An alternate vernier x-y positioning technique, using a boresight target, has been implemented and tested, using the spare image rotator. This approach will reduce the maximum time for vernier positioning from 1.2 seconds to 0.2 second.

The results of the pin-positioning test implemented on a modified LTS-3 terminal indicate that with this system the film can be positioned such that the resultant incidental FM due to the total x-y uncertainty is less than 1.5 percent worst case after several hundred accesses. Work has continued on the rotating microscope reader. The castings have been designed and released for fabrication, and the mechanical assembly layout is under way. The design of the electrical subassemblies has also been initiated, and a model of the spiral tracker has been constructed.

A program to process a 200-bit block of raw data from the film has been debugged, and a buffer interface which permits the processor to accommodate a 600-bit-per-second data rate

has been constructed. A data reduction test of the data modem configured for 600-bit-per-second operation and the SIM4-02 microcomputer processor has been successful. This result demonstrates that the processor is capable of accommodating the most demanding real-time system problem, i.e., complete reduction of the raw data stored on the film. Work is continuing on the data program to extend the present capability such that a complete program of 4000 processed bits can be extracted from a single spiral on the film at one or more times during a lesson.

A. Fiche Selector/Reader Breadboard

The breadboard reader was completed during this quarter and has performed most of the required functions within specification. An exception is the extraction of a selected fiche from a cassette followed by the coarse positioning of a frame in the projection gate.

A series of characterization tests was conducted which identified basic system performance.

1. Fiche Positioning – Row

Row positioning is achieved with a stepper motor having a two size step drive, 0.939 mm/step coarse and 0.0635 mm/step fine. The inherent accuracy of the stepper, however, is compromised in the coarse mode by a slip clutch used in step size selection, which causes ±0.38 mm row backlash at the film.

We now use a single optically sensed film fiducial mark to detect the location of the first row as the fiche enters the reader, and we are modifying the system to use fiducial marks for each row. The stepper drive will be modified so that the row marks are approached using fine steps to eliminate backlash.

2. Fiche Positioning – Column

The use of the periscope to select one of the two columns is satisfactory with respect to positional accuracy.

3. Fiche Positioning – Vernier x-y

The vernier positioning subsystem has a measured acquisition range of ±0.825 mm row, ±0.596 mm column, with a fine registration accuracy of ±0.052 mm. The average registration time is 0.6 second, and the maximum time is 1.2 seconds.

4. Optics

The optical system consists of image rotation, periscope column selection, and objective lens motion for vernier column registration, as described in the 15 September 1972 QTS.

The image rotator has been aligned, and the 1 ω image positional error measured over a period of several weeks (expressed as incidental FM) has held to less than ±0.27 percent.

The effect of the periscope on the performance and stability of the optical system remains to be determined, as definitive system transfer function measurements have been postponed until an improved film gate is installed.

The image brightness uniformity is within ±1 dB; however, a fibre illuminator will replace the conventional lamp-condenser illuminator for thermal considerations.

5. Radial Tracker

The radial tracker subsystem acquires and tracks imaged spirals having up to ±1.5 percent positional error. The loop gain is 660 sec^{-1} with 0.25 damping. An alternate servo motor

having higher acceleration at less current due to an improved motor-load inertia relationship will be installed and tested.

An optical sensing system, which is used to permit precise (±0.0317 mm at the film) prepositioning of the radial tracker, operates accurately but, due to servo amplifier/motor limitations, requires 1 sec to reset the head from the inner tracks. An improved amplifier/motor combination will reduce this time to less than 0.75 sec.

B. Alignment of Rotating Dove Prism

The spare Dove prism assembly was disassembled, then reassembled and aligned using a laser which was located on the optical axis of the Dove assembly by reflecting it back on itself at the center of glass plates mounted on the rotating assembly. Centering targets were drawn on these windows with a felt tip marker while the assembly was rotating. Using this technique, the assembly was aligned to reduce the amplitude of the centering error (introduced by the Dove assembly) to about 0.003 inch at the image plane. The residual tilt error was reduced to about 0.006 radian. The above adjustments were made by moving the middle mirror only in pitch, roll, and elevation.

The residual angular error is due to the fact that the intersection of the first and third mirrors is not perpendicular to the bearing axis. A modification of the mounting design will reduce this error by a factor of 3 or more.

C. Alternate x-y Positioning System

The present vernier x-y position sensing system is based on a sampled detection scheme. The sampling rate for this system is inversely related to the acquisition range required because of geometric constraints. In general, the acquisition time for a simple sampled digital servo system is proportional to the acquisition range divided by the sampling rate; i.e., acquisition time is proportional to the square of the acquisition range. The initial system based on a sampled detection scheme has an acquisition range of ±0.825 mm and a maximum acquisition time in excess of 1 sec. From a worst-case analysis of film instability and production tolerances, it is desirable to have an acquisition range of ±1 mm. In order to minimize the frame-frame video and audio delay, it is desirable to carry out the fine x-y acquisition in a fraction of a second. To realize these goals, an alternate x-y position sensing technique using a boresight target has been implemented and satisfactorily tested on a spare image rotator.

An optical system block diagram of the boresight target positioning system is shown in Fig. 1(a). If the film is offset in x and y from the axis of the image rotator, the boresight rotates about the center of the two-axis position sensing diode at a rate equal to twice the rotational rate of the image rotator. From Fig. 1(b) it can easily be seen that the signals out of the diode are quadrature signals whose amplitudes are proportional to the radial offset and whose phase angles are equal to an angle whose tangent is the y error divided by the x error. Using a doubly synchronous demodulator on each axis, as illustrated in Fig. 1(c), and deriving a synchronous reference signal from an optical code wheel on the image rotator, the actual x and y error signals can be recovered directly. Since the x and y error signals are recovered without filtering, the sampling rate for such a system is limited only by the mechanical time constant of the x-y vernier motors. The present stepping motors run at 80 steps per second with a 0.06-mm step size. Hence, the maximum acquisition time for this system will be less than 0.2 sec over a ±1 mm acquisition range.

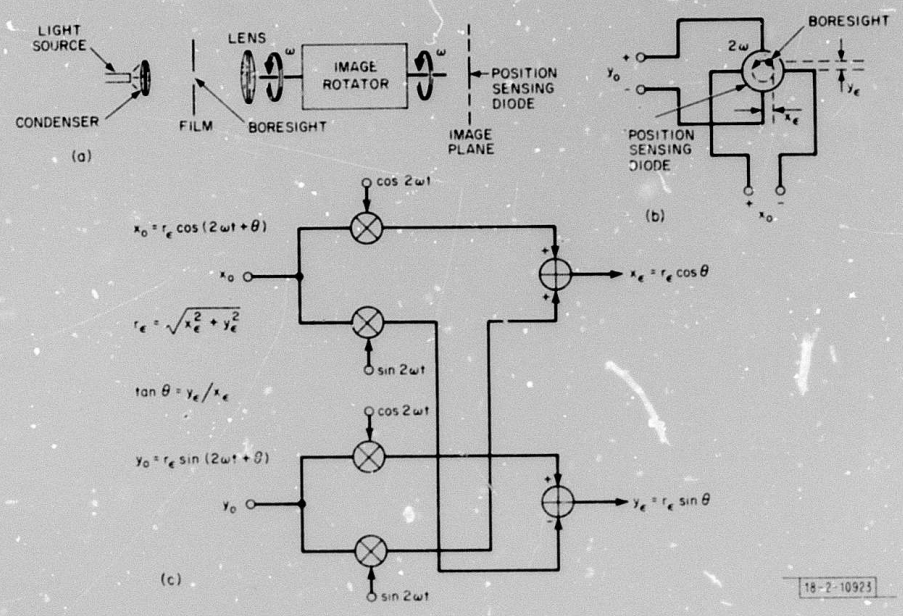

Fig. 1. Alternate x-y positioning system: (a) optical system block diagram; (b) rotating offset boresight; (c) doubly synchronous two-axis demodulator.

An advantage of the boresight system is that final x-y accuracy can be increased with a still acceptable maximum acquisition time. Minimizing the x-y uncertainty reduces the tracker servo bandwidth requirement. The rotating boresight on the diode also provides a convenient method for measuring and minimizing image rotator misalignment, initial centering of the coarse film positioning system, and, finally, for aligning the diode itself.

D. Pin-Registration Experiment

An LTS-3 system was modified by adding a pin-registration mechanism and replacing the audio condenser system with a measuring microscope. Special fiche with test reticles instead of audio records were punched on a step-and-repeat punch; the holes fitted the registration pin with "moderate snugness."

Two experiments were conducted – one with the pin registering the fiche against the force of the LTS-3 fiche retaining spring (110 gm) and one against a lighter spring (20 gm). The location of each frame on the fiche was measured the first time registered, and at intervals afterward. The change in location was found by subtracting the original location from the new location. The averages of the changes are shown in Figs. 2(a) and 2(b). With the stronger spring, the change was as much as 0.007 inch after 500 frame accesses, while with the weaker one it was less than 0.002 inch. These errors are at the fiche.

The scanning microscope reader will use pin registration with a 0.250-inch diameter pin (experimental pin diameter was 0.125 inch), and the fiche will be free in a horizontal plane during pin engagement. This will further reduce film wear.

The test program will be continued in order to evaluate a 0.125-inch pin engaging a slot, and a pin with rectangular cross section, free to float in rotation, engaging a similar slot.

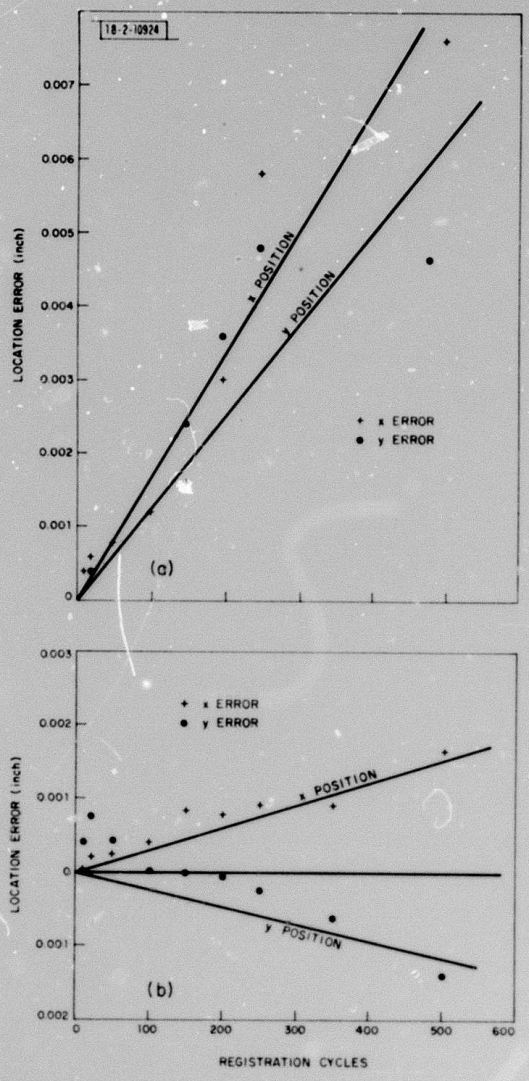

Fig. 2. Fiche pin-registration wear results: (a) with 110-gram spring; (b) with 20-gram spring.

E. Rotating Microscope Reader System

The two main castings for the rotating microscope reader have been released, and design is proceeding on the casting machining and details. The fiche extraction subsystem has been partially designed as an add-on to the rotating image reader.

Since a number of terminal designs continue to be executed, a general-purpose interface between the breadboard reader and the computer (PDP-8 or MCS-4) has been designed and fabricated. The device, shown in Fig. 3, includes audio processing subsystems such as pause detection or data demodulation modules.

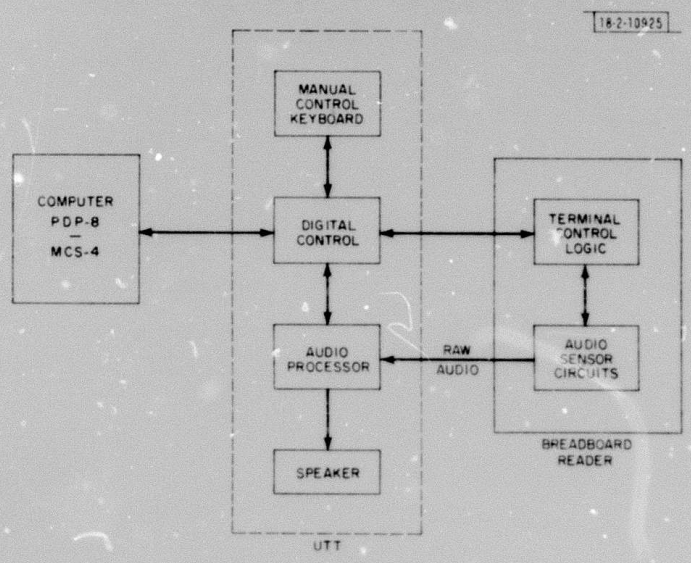

Fig. 3. Universal terminal tester.

An eight-week contract has been awarded to fabricate five Light Emitting Diode Assemblies (LEDA) to be tested and installed in the rotating microscope reader.

All terminal electronics and logic were designed and fabrication begun during this quarter. The microscope reader is being used as a vehicle to test the concept of row fiducial marks, and a closed-loop servo for more precise coarse row positioning is included in the design.

A simulation of the rotating microscope reader tracking system has been fabricated to test loop performance. Component parameters have been measured, and closed-loop measurements have been made using a deflecting laser beam as an input command.

F. Self Processor/Data Modem Tests

SIM4-02 processing time for 24-bit word frames (triple repeat 8-bit bytes) exceeds single clock period time at rates above 180 bps. It was therefore necessary to redesign the serial data interface to effect 8-bit parallel rather than single-bit data transfers into the SIM4-02. The block diagram of Fig. 4 shows the additional interface logic, consisting of an 8-bit serial shift/storage register and a 3-bit binary pre-settable ÷ 8 counter, to generate data ready flags for the processor. The SIM4-02 serial input (SERIN) processing routine was rewritten to accommodate

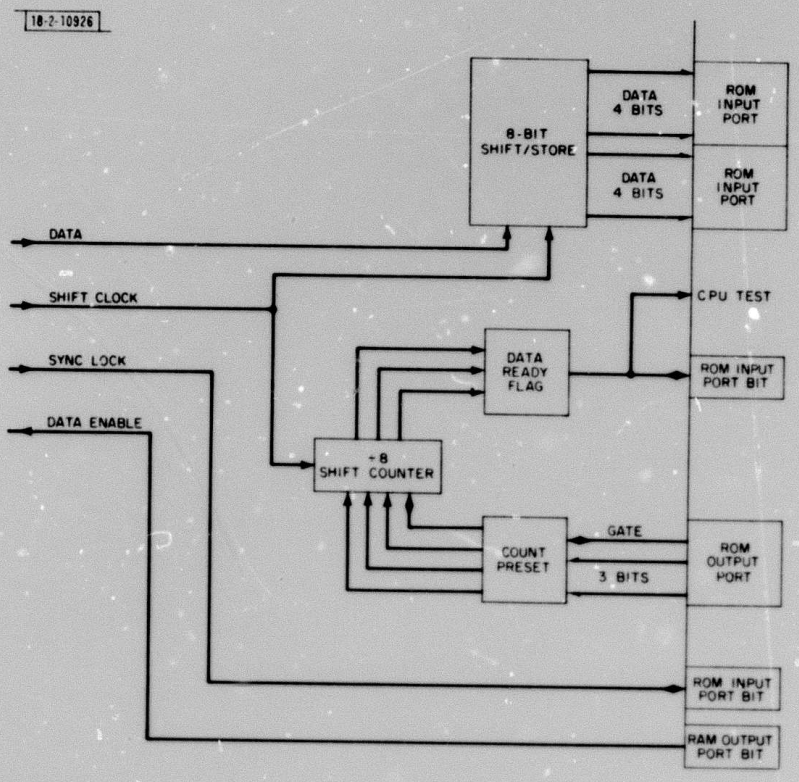

Fig. 4. Block diagram of SIM4-02 serial data interface.

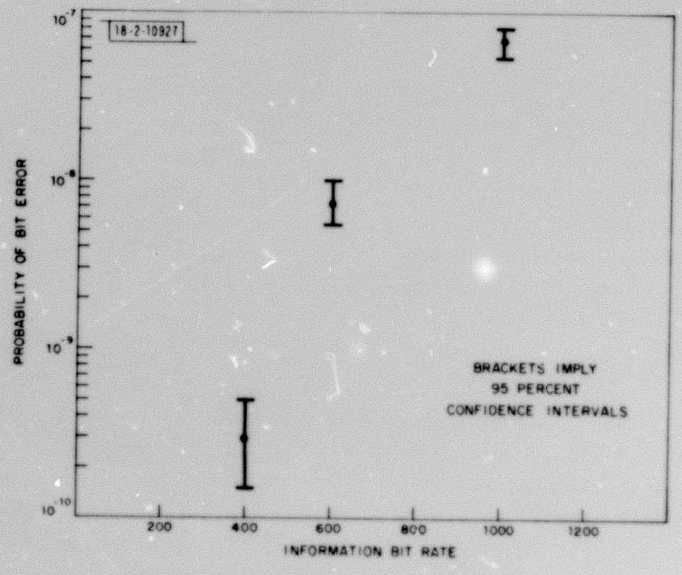

Fig. 5. Probability of bit error vs bit rate for LTS film channel.

the parallel data transfer, and data processing tests were successfully run with an LTS data modem operating at rates of 200, 400, and 600 bps.

Another version of the SERIN processing routine has been developed to accept 4096 bits per frame at 600 bps, with the first 12 bits of the frame designating the data store starting address within the SIM4-02 RAM storage banks.

The FILMIT test program used with the PDP-8/L to generate and output serial data for film spiral recording has been rewritten to support longer block lengths and altered format.

The SIM4-02 PROM programming capability has been upgraded during the past quarter by the replacement of the MP7-02 programmer module with the new Intel MP7-03 module which, when used with the Intel 1702A (PROMs), reduces chip programming time by approximately 77 percent. It is now possible to program a full PROM (256 words) in approximately 7 minutes.

G. Data Channel Experiments

The probability of error versus information bit rate is plotted in Fig. 5 for data recorded at the beginning of the LTS-3 audio spiral. These error rates are based on a triple repeat code for measured baud error rates at 400, 600, and 1000 bps. The results at the high end are better than originally expected. Initially, it was believed that transmission rates above 400 bps would be adversely affected by intersymbol interference due to the low-pass nature of the LTS-3 channel. In retrospect, there are two reasons why intersymbol interference has not been a problem. The first and previously anticipated one is that the LTS-3 frequency response is phaseless, since its transfer function is dominated by the reader lens modulation transfer function. The second and less obvious reason is due to the fact that the amplitude response of a good lens decreases almost linearly with increasing frequency. Any channel with a linear (or zero) phase response and a linear amplitude response transmits phase modulation without phase distortion.

Experiments have been carried out at 400 bps, the present LTS-3 data rate, to measure error rate at the inside of the LTS-3 spiral. Bit error rates on data recorded between 20 and 25 seconds into the track are less than 1 in 10^9 based on a limited number of samples. This is lower than would be predicted from the curves of Fig. 5. The fiche were examined and found to be highly overmodulated. Based on this, overmodulation appears to be desirable for data recording provided that no tracker difficulties are encountered for highly modulated tracks.