AD-759 956

FIELD-REPLACEABLE ROTOR BLADE POCKET STUDY

Pierce A. Meck, et al

United Aircraft Corporation

Prepared for:

Army/Mobility Research and Development Laboratory

February 1973

DISTRIBUTED BY:

NTIS

National Technical Information Service
U. S. DEPARTMENT OF COMMERCE
5285 Port Royal Road, Springfield Va. 22151

AD

AD 759956

USAAMRDL TECHNICAL REPORT 72-69

FIELD-REPLACEABLE ROTOR BLADE POCKET STUDY

By

Pierce A. Meck
Charles V. Galli

February 1973

B

EUSTIS DIRECTORATE
U. S. ARMY AIR MOBILITY RESEARCH AND DEVELOPMENT LABORATORY
FORT EUSTIS, VIRGINIA

CONTRACT DAAJ02-71-C-0022
SIKORSKY AIRCRAFT
DIVISION OF UNITED AIRCRAFT CORPORATION
STRATFORD, CONNECTICUT

Approved for public release;
distribution unlimited.

Reproduced by
NATIONAL TECHNICAL
INFORMATION SERVICE
U S Department of Commerce
Springfield VA 22151

135

DISCLAIMERS

The findings in this report are not to be construed as an official Department of the Army position unless so designated by other authorized documents.

When Government drawings, specifications, or other data are used for any purpose other than in connection with a definitely related Government procurement operation, the United States Government thereby incurs no responsibility nor any obligation whatsoever; and the fact that the Government may have formulated, furnished, or in any way supplied the said drawings, specifications, or other data is not to be regarded by implication or otherwise as in any manner licensing the holder or any other person or corporation, or conveying any rights or permission, to manufacture, use, or sell any patented invention that may in any way be related thereto.

Trade names cited in this report do not constitute an official endorsement or approval of the use of such commercial hardware or software.

DISPOSITION INSTRUCTIONS

Destroy this report when no longer needed. Do not return it to the originator.

A

Unclassified
Security Classification

DOCUMENT CONTROL DATA - R & D

(Security classification of title, body of abstract and indexing annotation must be entered when the overall report is classified)

1. ORIGINATING ACTIVITY *(Corporate author)* Sikorsky Aircraft Division of United Aircraft Corporation Stratford, Connecticut	2a. REPORT SECURITY CLASSIFICATION Unclassified 2b. GROUP

3. REPORT TITLE

FIELD-REPLACEABLE ROTOR BLADE POCKET STUDY

4. DESCRIPTIVE NOTES *(Type of report and inclusive dates)*

Final Report

5. AUTHOR(S) *(First name, middle initial, last name)*

Pierce A. Meck
Charles V. Galli

6. REPORT DATE February 1973	7a. TOTAL NO. OF PAGES 134	7b. NO. OF REFS
8a. CONTRACT OR GRANT NO. DAAJ02-71-C-0022 b. PROJECT NO. 1F163204DB38 c. d.	9a. ORIGINATOR'S REPORT NUMBER(S) USAAMRDL Technical Report 72-69 9b. OTHER REPORT NO(S) *(Any other numbers that may be assigned this report)* Sikorsky Engineering Report 50758	

10. DISTRIBUTION STATEMENT

Approved for public release; distribution unlimited.

11. SUPPLEMENTARY NOTES An appendix to this report was published under separate cover with limited distribution.	12. SPONSORING MILITARY ACTIVITY Eustis Directorate U.S. Army Air Mobility R&D Laboratory Fort Eustis, Virginia

13. ABSTRACT

The present CH-54B blade consists of 28 nonstructural pockets of 14 different configurations because of spar taper. When damaged, these pockets have had to be replaced at Sikorsky because of the present heat-curing adhesive utilized for pocket attachment.

The purpose of this program was to design, fabricate, and test a field-replaceable pocket which could be utilized in any position along the blade spar and attached with ambient-temperature curing adhesives at field level to reduce cost and eliminate shipping time to CONUS.

The program was conducted in three phases. Phase I consisted of design, fabrication, and test of a practical universal pocket. Phase II consisted of adhesive selection and qualification testing plus the design and fabrication of a field jigging kit. Phase III consisted of a comparison of the cost of repairing CH-54 main blades using factory support and by field-replaceable pocket kits.

The study showed that the pocket design was universally adaptable to any of 27 positions on the blade and was structurally and aerodynamically adequate. The adhesive selected provided acceptable bond strength under simulated field conditions, and the field pocket jigging fixture was lightweight and capable of being utilized by Army aircraft maintenance personnel. The study showed that field repair with the universal pocket would result in a rotor blade life-cycle savings of about $300,000 per year.

DD FORM 1 NOV 65 1473 REPLACES DD FORM 1473, 1 JAN 64, WHICH IS OBSOLETE FOR ARMY USE.

Unclassified
Security Classification

Unclassified
Security Classification

14. KEY WORDS	LINK A ROLE	LINK A WT	LINK B ROLE	LINK B WT	LINK C ROLE	LINK C WT
Field Replaceable Rotor Blade Pocket						

Unclassified
Security Classification

3211-73

DEPARTMENT OF THE ARMY
U. S. ARMY AIR MOBILITY RESEARCH & DEVELOPMENT LABORATORY
EUSTIS DIRECTORATE
FORT EUSTIS, VIRGINIA 23604

This report was prepared by the Sikorsky Aircraft Division of United Aircraft Corporation under the terms of Contract DAAJ02-71-C-0022. It presents the results of an investigation of the feasibility of field-replaceable (user level) bonded pockets on helicopter main rotor blade designs using the single main spar/bonded pocket type design.

The results of this initial investigation indicate that the field-replaceable bonded pocket concept is feasible and structurally practical, with the potential for attaining rotor blade life-cycle cost savings. Further effort is planned to evaluate the operational suitability of this concept, in kit form, for use on helicopter main rotor blades.

This report has been reviewed by the Eustis Directorate, USAAMRDL and is considered to be technically sound.

The technical monitor for this contract was Mr. Thomas E. Condon of the Military Operations Technology Division of this Directorate.

Project 1F163204DB38
Contract DAAJ02-71-C-0022
USAAMRDL Technical Report 72-69
February 1973

FIELD-REPLACEABLE ROTOR BLADE POCKET STUDY

Final Report

Sikorsky Engineering Report 50758

By

Pierce A. Meck
Charles V. Galli

Prepared by

Sikorsky Aircraft
Division of United Aircraft Corporation
Stratford, Connecticut

for

EUSTIS DIRECTORATE
U.S. Army Air Mobility Research and Development Laboratory
FORT EUSTIS, VIRGINIA

Approved for public release;
distribution unlimited.

FOREWORD

The design and fabrication of a universal rotor blade pocket for field replacement was performed under Contract DAAJ02-71-C-0022 with the Eustis Directorate, U. S. Army Air Mobility Research and Development Laboratory, Fort Eustis, Virginia, Project 1F163204DB38, and was under the general technical direction of Messrs. Joseph McGarvey and Thomas Condon of the Reliability and Maintainability Division of the Eustis Directorate. The field-replaceable trailing-edge pocket is one of several studies recently concluded for the purpose of achieving more cost-effective rotor blades.

Sikorsky's principal participants were Charles Galli, Pierce Meck and William C. Reinfelder of the Rotor System Section. The program was under the general supervision of William F. Paul, Rotor System Section Head.

TABLE OF CONTENTS

	Page
ABSTRACT	iii
FOREWORD	v
LIST OF ILLUSTRATIONS	viii
LIST OF TABLES	xiii
INTRODUCTION	1
UNIVERSAL POCKET DESIGN	3
UNIVERSAL POCKET FABRICATION AND TEST	26
FIELD JIGGING	48
FATIGUE AND PROOF TESTS	58
ADHESIVE FATIGUE QUALIFICATION	80
COST COMPARISON	114
CONCLUSIONS	119
LITERATURE CITED	120
GLOSSARY	121
APPENDIX. ADHESIVE SELECTION AND QUALIFICATION (UNDER SEPARATE COVER - LIMITED DISTRIBUTION)	
DISTRIBUTION	123

Preceding page blank

LIST OF ILLUSTRATIONS

Figure		Page
1	Universal Pocket Design	4
2	Overlapping and Interlocking Rib Design	5
3	Overlapping Ribs - Steel Dowel Design	6
4	Split Rib With "H" Clips Design	7
5	Internal Rib Relief Design	8
6	Internal Rib Relief Pocket Design Showing Rib Movement During Bonding	12
7	Model CH-54B Standard Production Blade	13
8	Expanding a Universal Pocket	16
9	Universal Pocket	17
10	Universal Pocket Shim, Spacer and Seal	19
11	Universal Pocket Kit	21
12	Shim and Spacer Requirement for a Typical Pocket - Position No. 7	23
13	Flapwise Airload Distribution for CH-54B	28
14	Chordwise Airload Shear and Moment for CH-54B	29
15	Production Design Proof Loads for CH-54B . . .	30
16	Proof Load Pocket Specimen	31

Figure		Page

17	Static Proof Load Whiffletree Test Fixture and Support Assembly	32
18	Static Proof Load Test	35
19	CH-54 Universal Pocket Proof Load Specimen After Test	36
20	Pocket Trailing Edge Deflection Vs. Applied Load for Universal No. 2 Pockets	37
21	Pocket Trailing Edge Deflection Vs. Applied Load for Universal No. 7 Pockets	38
22	Measuring Contour Variations of a Universal Pocket at No. 14 Pocket Location	39
23	Contour Variation Across Universal Pocket No. 14	40
24	Schematic Rotary-Wing Blade Airfoil Contour-Universal Pocket	43
25	Effect of Surface Waviness on Wing Drag at a Full-Scale Helicopter Reynolds Number (R_n)	45
26	Effect of Surface Waviness on Wing Drag at a Full-Scale Helicopter Mach Number	46
27	Air Bag Concept	49
28	Air Bag Field Jigging Kit in Position	51
29	Bungee-Cord Concept 6405-15011	53
30	Bungee-Cord Field Jigging Kit in Position	55
31	Field Jigging Kit 6405-15011	56
32	Removing a Damaged Pocket	60
33	Sanding Residual Adhesive	61

Figure		Page

34	Cleaning Residual Adhesive	62
35	Cleaning Universal Pocket	63
36	Applying Candidate Adhesive to Universal Pocket	64
37	Applying Candidate Adhesive to Spar	65
38	Positioning Adhesive-Coated Spacer	66
39	Pocket Trailing Edge Deflection Vs. Applied Load Using Candidate 1 Adhesive	69
40	Pocket Trailing Edge Deflection Vs. Applied Load Using Candidate 3 Adhesive	70
41	Sikorsky 40,000-Lb Blade Fatigue Test Machine With S-61 Fatigue Specimen	71
42	Main Rotor Blade Pocket-to-Spar Bond Fatigue Test Specimen	72
43	Bonding of Production Pockets to Fatigue Specimen per Production Procedures	73
44	Bond Separation Due to Fatigue	75
45	Typical Fatigue Specimen Bond Separations at Teardown After 3 x 10^6 Cycles	77
46	First S-61 Fatigue Specimen; Center Control Pocket Bond Separations at Teardown	78
47	Second S-61 Fatigue Specimen; Center Control Pocket Bond Separations at Teardown	79
48	Adhesive Fatigue Evaluation Test, CH-54 Blade in a 100K Test Machine	81
49	Damaged CH-54 Blade Pocket	83
50	Removing a Damaged Blade Pocket	84

Figure		Page
51	Sanding Residual Adhesive Remaining on Blade Spar	85
52	Cleaning the Sanded Adhesive With Methyl-Ethyl-Ketone	86
53	Universal Pocket Kit	87
54	Cleaning the Universal Pocket With Methyl-Ethyl-Ketone	88
55	Hand Mixing the Selected Adhesive	89
56	Application of Mixed Selected Adhesive to Universal Pocket	90
57	Application of Mixed Selected Adhesive to Blade Spar	91
58	Installation of Spacer 6405-15007-103	92
59	Positioning Universal Pocket on Blade Spar	93
60	Bungee-Cord Field Jigging Kit 6405-15011	94
61	Installation of Field Jigging Kit	95
62	Connecting Ends of Bungee Cord to Universal Pocket Trailing Edge	96
63	Field Jigging Kit in Position	97
64	Components Necessary To Repair a Damaged Pocket	98
65	Instrumented CH-54 Blade Fatigue Specimen	99
66	Vibratory BR Stress Distribution for CH-54 Blade	100

Figure		Page

67 Pocket-to-Spar Bond Separation After 0.9×10^6 Cycles at the Third Load Level on First CH-54 Fatigue Specimen 103

68 Pocket-to-Spar Bond Separations After 2.5×10^6 Cycles at the Third Load Level on First CH-54 Fatigue Specimen 104

69 Selected Adhesive Bond Separations on First CH-54 Fatigue Specimen at Teardown; Total Cycles 8.5×10^6 105

70 Pocket-to-Spar Bond Separations After 0.5×10^6 Cycles at the Third Load Level on Second CH-54 Fatigue Specimen 106

71 Pocket-to-Spar Bond Separations After 2.0×10^6 Cycles at the Third Load Level on Second CH-54 Fatigue Specimen 107

72 Pocket-to-Spar Bond Separations After 3.0×10^6 Cycles at the Third Load Level on Second CH-54 Fatigue Specimen 108

73 Selected Adhesive Bond Separations on Second CH-54 Fatigue Specimen at Teardown; Total Cycles 9.0×10^6 109

74 Pocket-to-Spar Bond Separations After 3.5×10^6 Cycles at the Third Load Level on Third CH-54 Fatigue Specimen 111

75 Selected Adhesive Bond Separations on Third CH-54 Fatigue Specimens at Teardown: Total Cycles 9.5×10^6 112

76 Selected Adhesive Bond Separations Vs. Production Adhesive 113

LIST OF TABLES

Table		Page
I	Analysis of Pocket Design	9
II	Shim and Spacer Requirement (Qty Per Pocket)	22
III	Failure Loads - Universal Pockets	34
IV	Contour Variation From Nominal	42
V	Universal Pockets - Proof Load Test Results	68
VI	H-54 Pocket-to-Spar Adhesive Bond Evaluation Test Conditions	101

INTRODUCTION

A significant percentage of the Army's CH-54 helicopter rotor blades are removed from aircraft and returned to overhaul depots after sustaining damage to the aft portion of the blade made up of discontinuous nonstructural 12-inch sections called pockets.

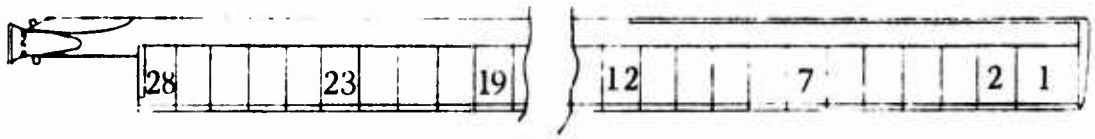

CH-54B Blade

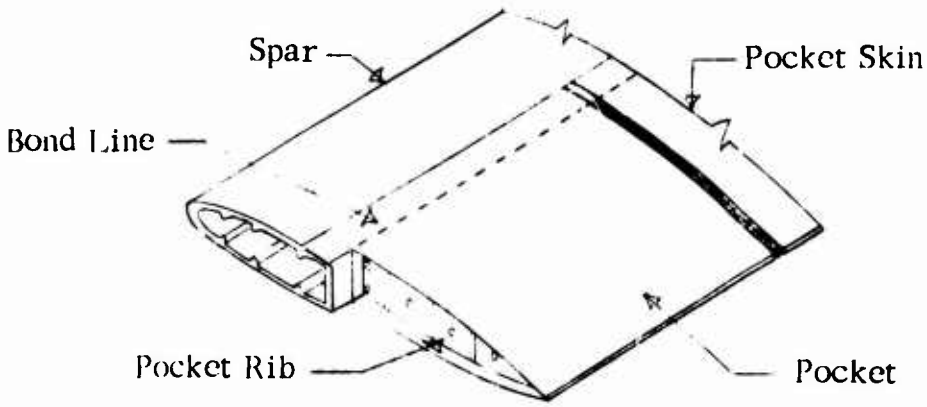

These trailing-edge pockets are adhesively bonded to the forward structural blade spar and can be individually replaced upon sustaining serious damage. However, due to the structural adhesive now being used, this **replacement can be performed only at an overhaul and repair facility** equipped with highly specialized jigging to obtain the pressure and temperature necessary for a satisfactory bond.

A universal 12-inch pocket design adaptable to any spanwise position on the blade, with the exception of the 20-inch number 1 tip pocket, and an adhesive system that would provide an acceptable bond strength after curing under ambient conditions using simplified field jigging would make the CH-54 main rotor blade more readily repairable in the field and would be most cost effective. The cost of manufacturing labor to replace these pockets and the number of spare main rotor blades in the supply system could be substantially reduced, plus the shipping costs to return the damaged blade to the factory would be eliminated.

The objective of the work performed under this contract was to examine the feasibility and practicality of the concept of a field-replaceable helicopter rotor blade pocket that could be easily replaced by military personnel. The CH-54B main rotor blade was used as a test bed to evaluate

this concept.

The study was in three phases. In Phase I, the existing blade pocket utilized on CH-54 helicopter main rotor blades was redesigned to make the pocket universally adaptable to any spanwise position on the spar with the exception of the tip pocket. These pockets were then fabricated and structurally (proof) tested on blade spar sections, and pocket/spar assembly airfoil compatibility was measured. In Phase II, the feasibility of selected adhesive systems was examined and evaluated under simulated field conditions to provide an acceptable bond strength for bonding the blade pocket to the main rotor blade spar. The simulated field conditions considered were the effects of temperature and humidity, along with lack of factory facilities for applying pressure and temperature for bonding. The effects of residual material (the residue of the original adhesive on the main spar) after removal of the damaged pocket on the bond strength were also considered. In addition, a lightweight (5 pounds) field jigging kit of simple design, capable of being utilized in the field by Army aircraft maintenance personnel, was designed and fabricated. Each segment of the jigging was assembled into one complete tool to prevent loss of components in the field. In Phase III, the difference in cost between repairing the current CH-54 helicopter main rotor blade using factory support and the candidate main rotor blade with field-replaceable pockets was determined. Various numbers of damaged pockets per blade were considered in cost comparisons.

UNIVERSAL POCKET DESIGN

The CH-54 helicopter main rotor blade is composed of a hollow, aluminum alloy, extruded spar which forms the leading edge and is the main structural supporting member of the blade. To this spar, 28 individual pockets, each constructed of aluminum ribs, channel, and an aluminum skin covering, are adhesively bonded to form the aft portion of the blade. The 28 individual pockets are composed of 14 different sizes to fit the blade spar steps and taper. Therefore, the objective of the work performed under this task was, using the design of the CH-54 helicopter rotor blade as a basis, to examine the feasibility and practicality of the concept of a universal pocket. The universal pocket would be a redesign of the existing pocket and would be adaptable to any spanwise position on the spar, exclusive of the tip pocket, replacing the 13 different production pocket types for field replacement, therefore reducing the number of spare parts required. The universal pocket would be as strong and light as the existing pocket with a minimum of deviation of the airfoil contour from the nominal contour.

Five different pocket redesigns were evaluated and are shown in Figures 1 through 5. Table 1 is a comparative analysis of these designs. Figure 1 was selected as the universal design because it was structurally adequate and lightweight, provided a minimum of airfoil deviation, required no extensive tooling, and was similar to a standard CH-54B production pocket with only minor modification. The alternate designs were rejected because they were structurally inadequate (Figures 3 and 5), complex (Figures 2 and 4), and heavy (Figure 3); all would require extensive tooling changes. This universal pocket concept is suitable for use on either the CH-54B blade, which was used as a test bed for this study, or the CH-54A blade. Use of this universal pocket concept for field replacement of pockets will require only one pocket for field replacement of pocket numbers 2 through 28. The normal production blade installation (Figure 7) requires the use of 13 different pockets (excluding the tip pocket) because of the increasing depth of the airfoil due to spar sidewall thickness taper and also because of the spar backwall steps which change the spar chord.

The universal pocket (Figure 1) is the same as a 65150-00011-088 production pocket used in the number 2 position on the CH-54B blade. This pocket was selected as the base for the universal pocket because it is the furthest outboard (except for the number 1 tip pocket which is not included in this study), and therefore is the minimum depth pocket. The number 2 pocket will require only that it be "expandable" to fit all other pocket positions. A .016-inch-thick skin is used for the universal pocket in place of the .020-inch skin used on the production

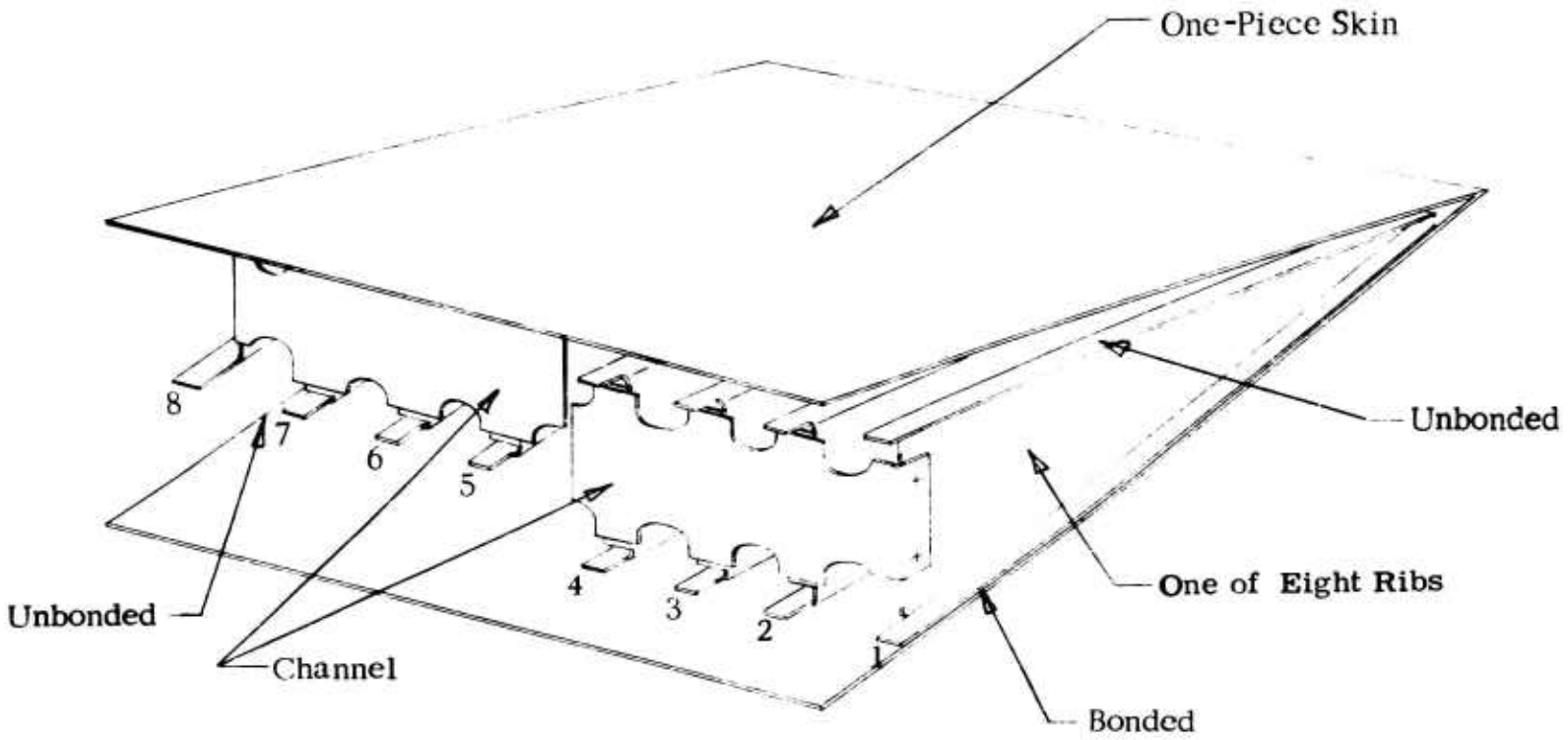

Figure 1. Universal Pocket Design.

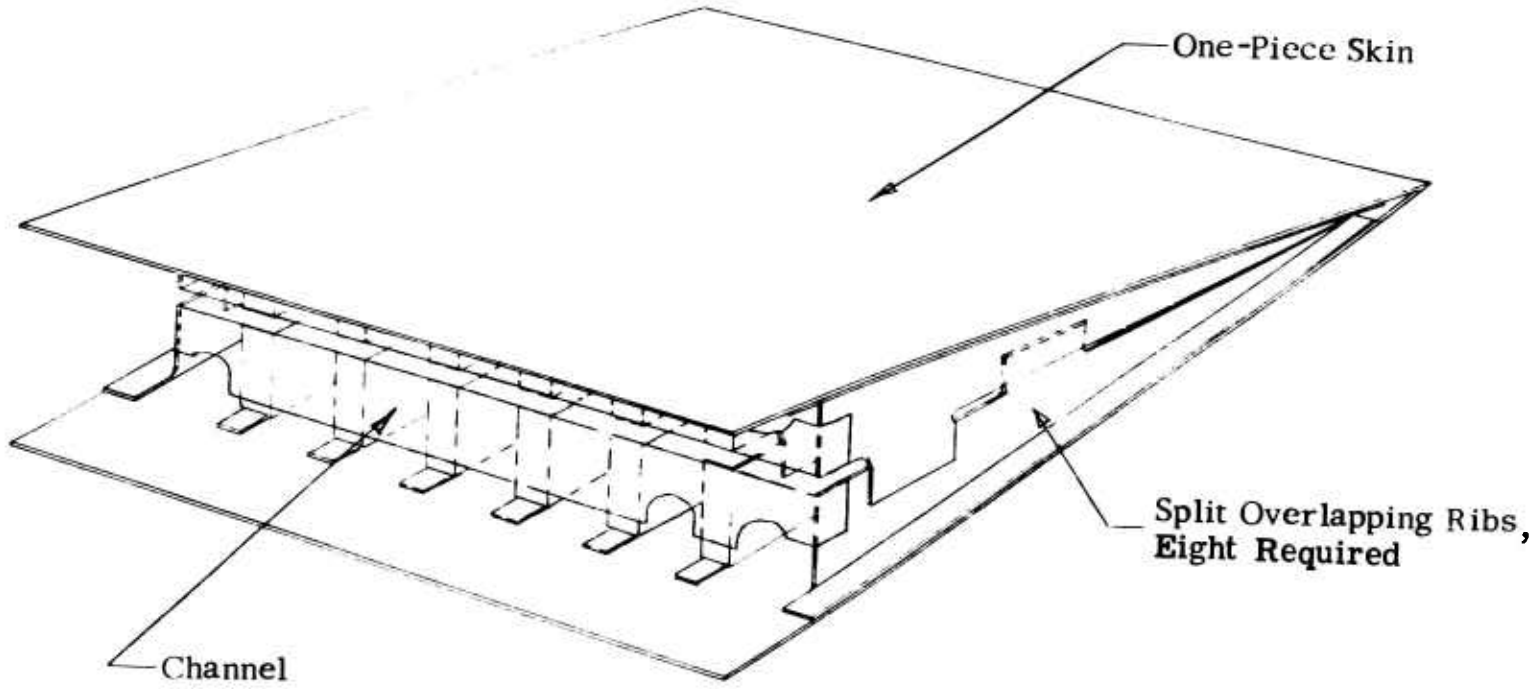

Figure 2. Overlapping and Interlocking Rib Design.

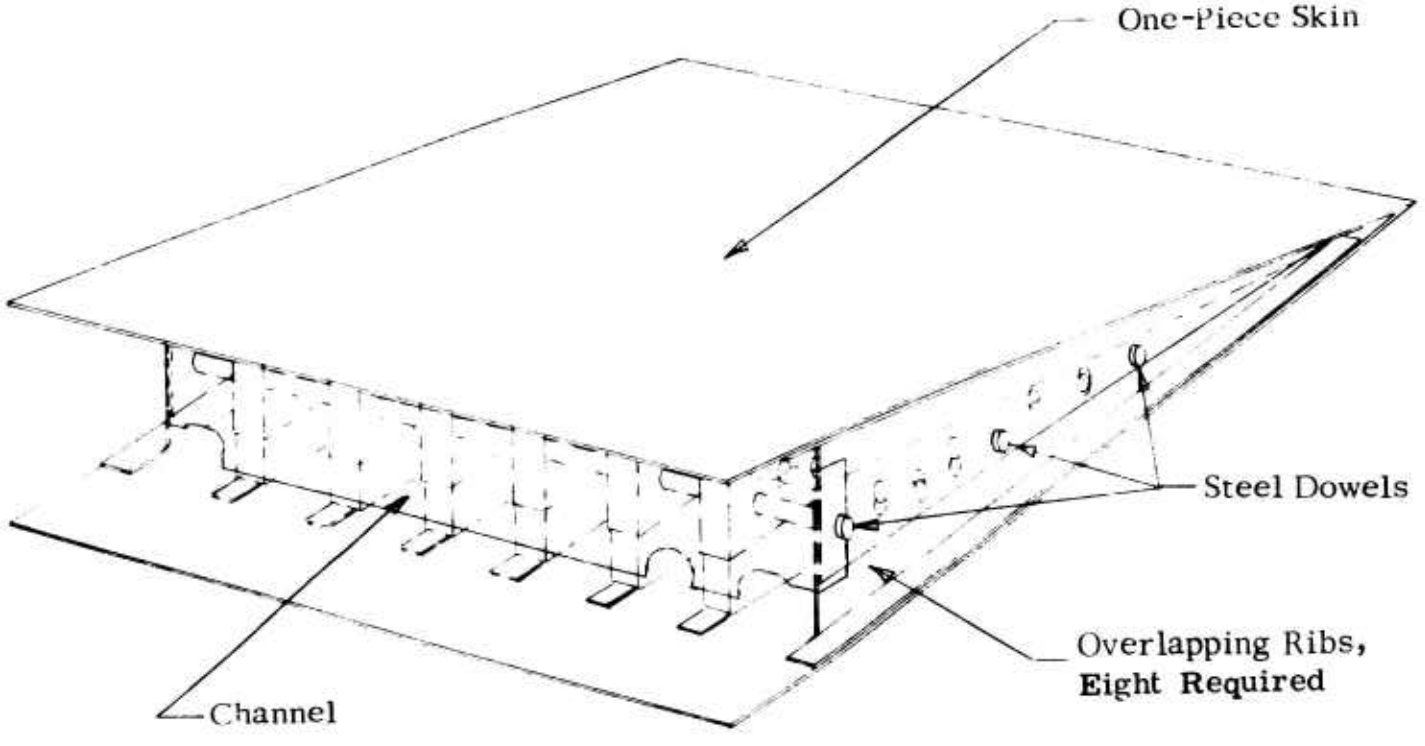

Figure 3. Overlapping Ribs - Steel Dowel Design.

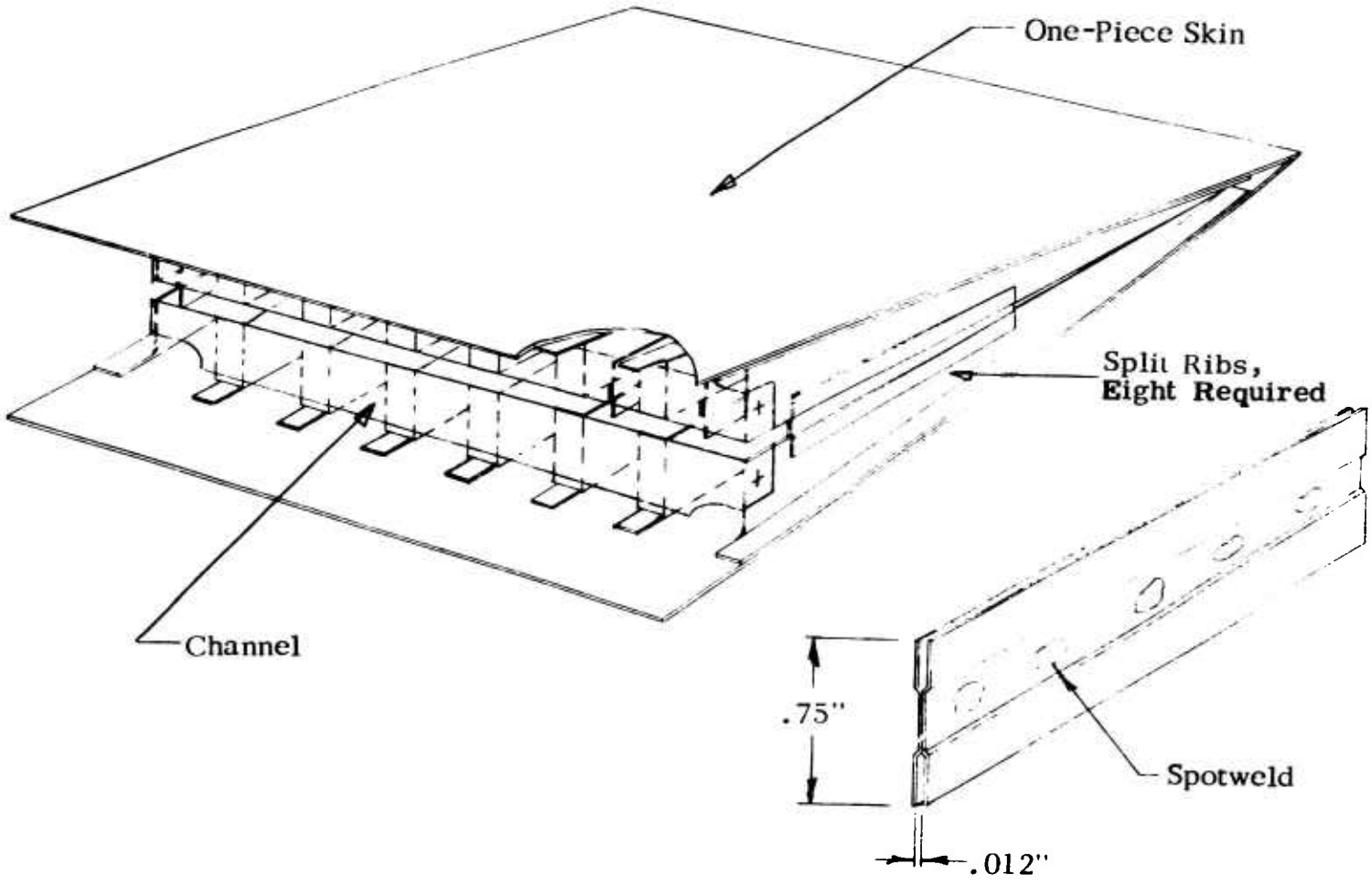

Figure 4. Split Rib With "H" Clips Design.

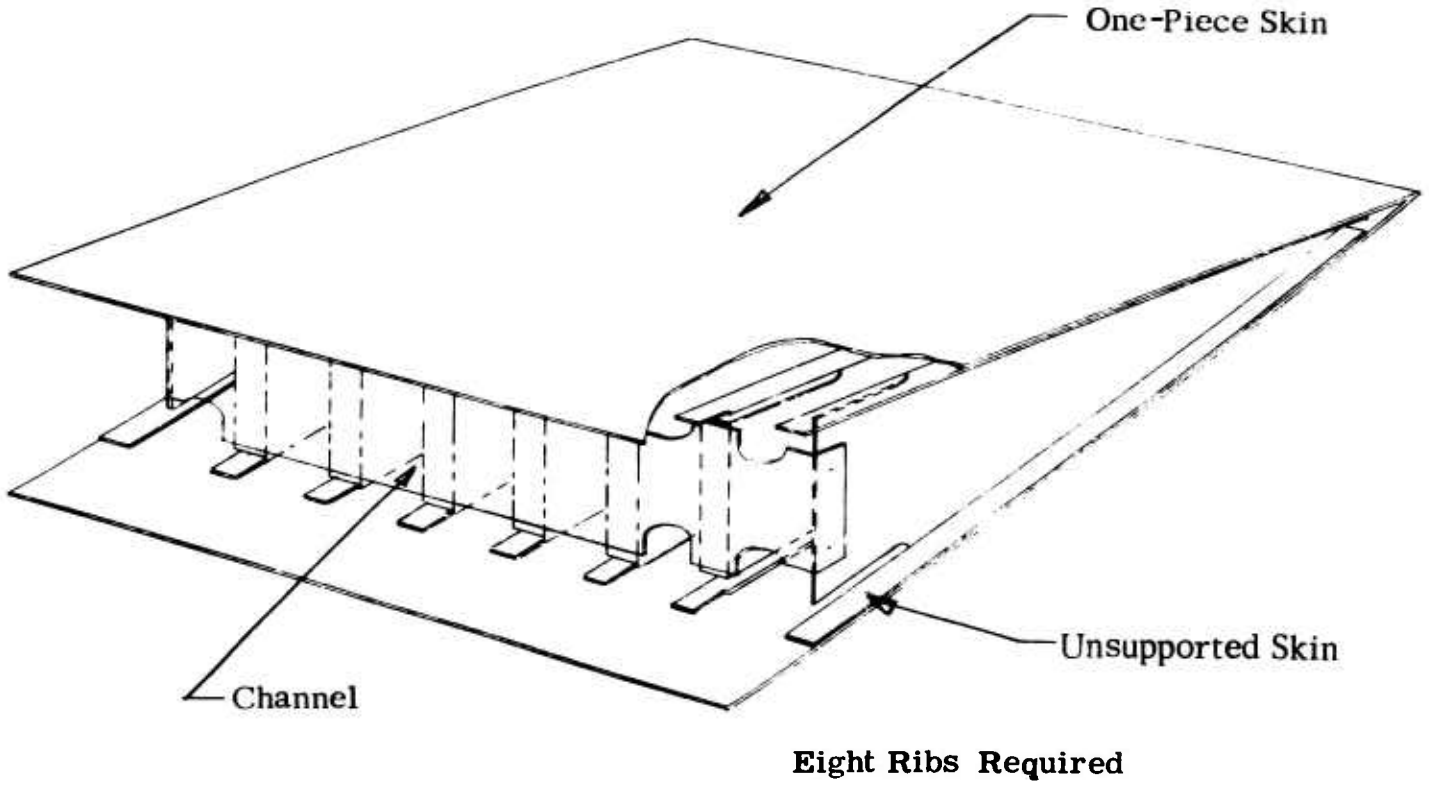

Figure 5. Internal Rib Relief Design.

TABLE I. ANALYSIS OF POCKET DESIGN

Design	Advantages	Disadvantages
Universal Pocket (Figure 1)	1. Maintain close contour at all times 2. Structurally adequate	1. Shims and spacers required.
Overlapping and Interlocking Rib (Figure 2)	1. Few parts (no shims) 2. Light weight	1. Difficult to assemble (inside ribs may wander and not interlock). 2. Difficult to maintain correct contour thickness (no positive stop to control pocket thickness). 3. New rib tools required (current ribs have flanged lightening holes). 4. Strength depends on how well interlocking ribs are bonded.
Overlapping Ribs Locking With Steel Dowel (Figure 3)	1. Maintain close contour at all locations	1. Heavy. 2. Ribs will be unsupported except at dowels. 3. New rib tools required (current ribs have flanged lightening holes). 4. All strength concentrated on dowels; holes may elongate and pockets will develop movement.

TABLE I - Continued

Design	Advantages	Disadvantages
Split Rib With "H" Clips (Figure 4)	1. Structurally adequate	1. Difficult to assemble clips on internal ribs. 2. New rib tools required (flange around lightening holes must be removed). 3. Many pieces required (one for each rib plus different sizes for different contour thickness). 4. Difficult to control contour thickness if clips are not located properly. 5. Heavy solution.
Modified Internal Rib Relief (Figure 5)	1. Few parts (no shims required) 2. No new tools required 3. Light solution	1. Unsupported skin area makes pocket structurally inadequate. Proof load pockets with a 1/2-in.-long rib-relief failed at 450 lb. Calculations indicate a pocket with 1-in.-long rib-relief would fail at 200 lb. Proof load requirements are 565 lb. One proof load pocket fabricated with 2-in.-long rib-relief could not be tested because of rib movement during pocket to spar bonding. (See Figure 6. Note rib movement and skin buckle.)

TABLE I - Continued		
Design	Advantages	Disadvantages
		2. Built-in contour discrepancies (i.e., sharp discontinuity immediately aft of blade spar).

Figure 6. Internal Rib Relief Pocket Design Showing Rib Movement During Bonding.

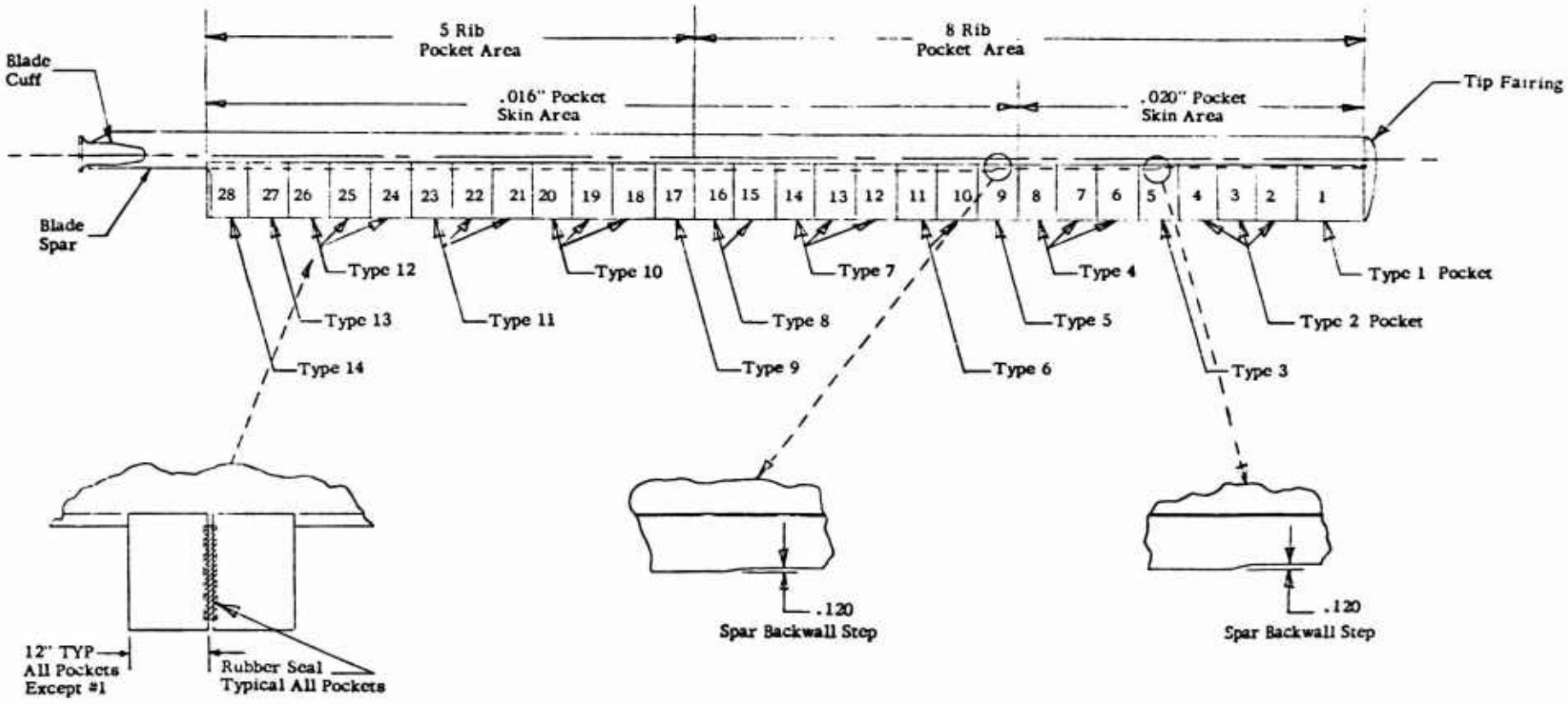

Figure 7. Model CH-54B Standard Production Blade.

number 2 pocket. The lighter skin is required to reduce the weight of the universal pocket to maintain blade balance. The ribs are the same as the number 65150-00019 ribs of the production pocket except that .240 inch is removed from the length of each of the ribs. This is necessary so that the number 2 pocket will fit in the inboard pocket positions where the spar chord is increased by the increased backwall thickness of .240 inch. Spacers are used to account for this gap on the outboard eight pockets. The entire structure is adhesively bonded together except that four ribs are left unbonded by omitting the adhesive film between the skin and the ribs on each side of the pocket. Ribs numbered 1 through 4 are left unbonded on the top side; ribs 5 through 8, on the bottom side. The production channel (65150-00020-102) is used except that it is cut in half to permit the pocket to expand. One-half of each channel is bonded to the four ribs on each side of the pocket. This procedure allows the pocket to be "expanded" to fit all spar positions as shown in Figure 8.

The universal pocket kit consists of the pocket (Figure 9), as described above, and phenolic shims of .040 inch and .090 inch thickness (Figure 10) to go between the unbonded ribs and the skin to compensate for the increase in rotor blade airfoil thickness from tip to root. The shims are delivered in one piece in the kit for convenience in handling. In use, the upper and lower halves are separated on the grooved line and used in their respective positions. Phenolic spacers .120 inch thick (Figure 10) are provided to go between the spar backwall and the pocket channel as required to compensate for the spar backwall steps. A rubber seal (Figure 10) is provided as an aerodynamic seal between pockets. This seal is split along the chord line to permit it to fit each of the pockets. Splitting the seal allows one seal design to fit in all positions on the blade, thus taking the place of seven production seals. The seal will be bonded to the adjacent pockets with contact adhesive. The entire kit is shown in Figure 11 and is composed of the following items:

Universal Pocket	6405-15006-081
Shim (.040 in.)	6405-15007-101
Shim (.090 in.)	6405-15007-102
Spacer	6405-15007-103
Seal	6405-15007-104

In use, a pocket will be installed by first selecting the proper shim and/or spacer according to the pocket position on the blade. For example, pocket number 7 requires one .040-inch shim and one spacer as shown in Table II and Figure 12. The proper shim is coated with adhesive and placed between the unbonded ribs and the skin on both the top and the bottom sides of the pocket. Each shim segment is color-coded for proper placement. By shimming both the top and bottom of the pocket, the symmetrical airfoil contour is maintained. The proper number of

Preceding page blank

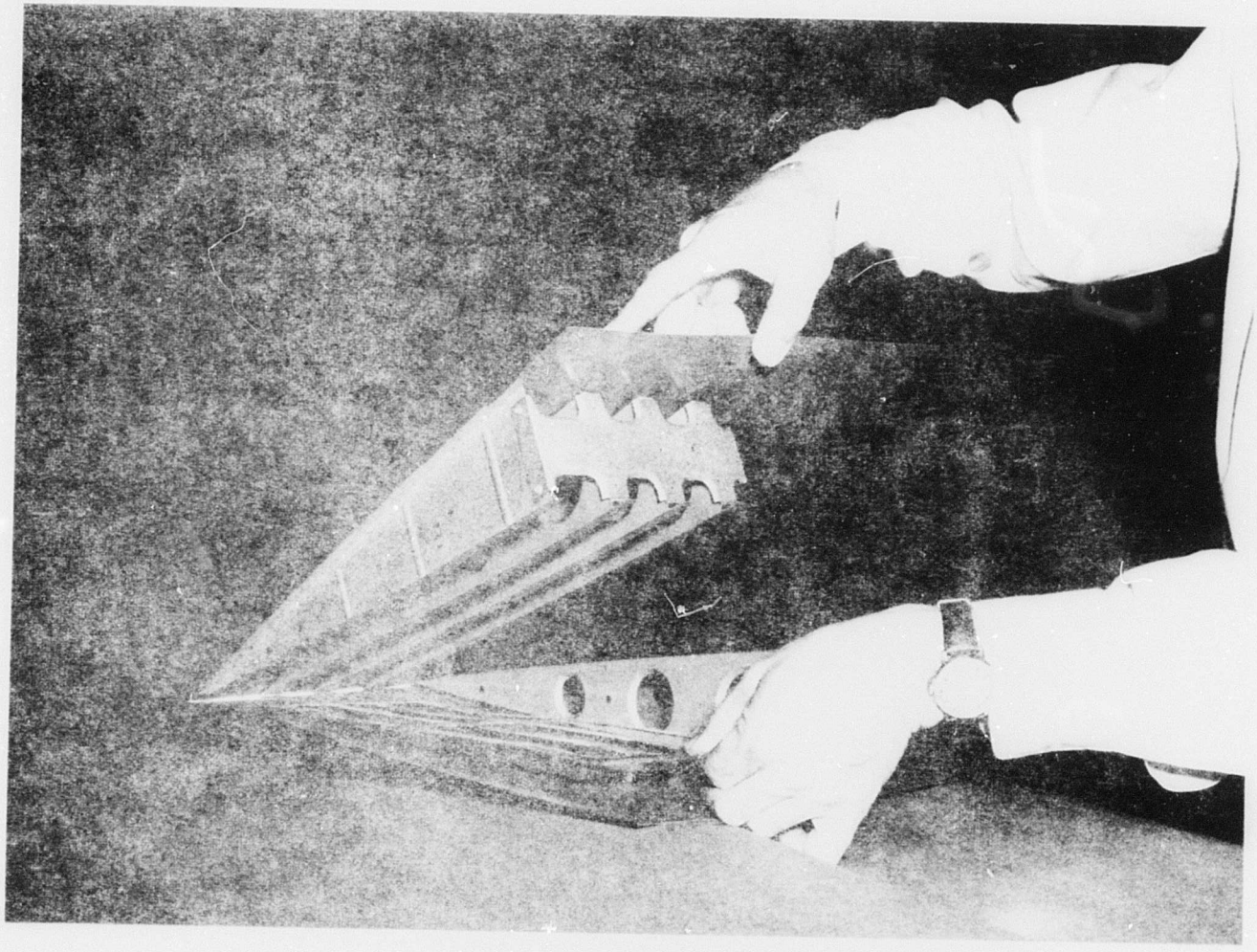

Figure 8. Expanding a Universal Pocket.

1. WHEN ASSEMBLING POCKET, RIBS #1 THRU #4 ARE NOT TO BE BONDED TO SKIN ON TOP SIDE & RIBS #5 THRU #8 ARE NOT TO BE BONDED TO SKIN ON BOTTOM SIDE. A LAYER OF SCRIM CLOTH IS TO BE USED IN LIEU OF BONDING FILM. SCRIM CLOTH TO BE REMOVED AFTER BONDING OPERATION.

2. -101 &-102 RIB SAME AS 65150-00019-103 &-104 EXCEPT LENGTH HAS BEEN SHORTENED BY .240.

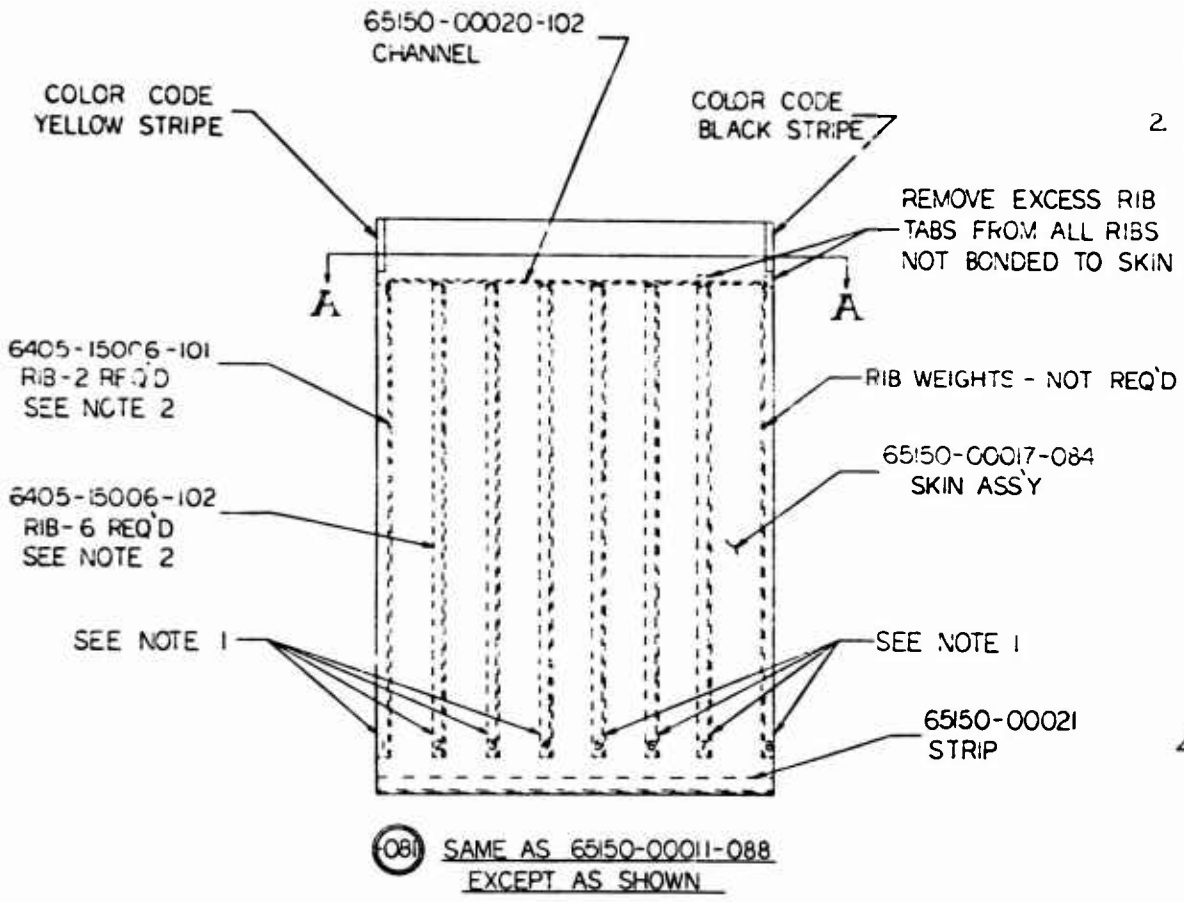

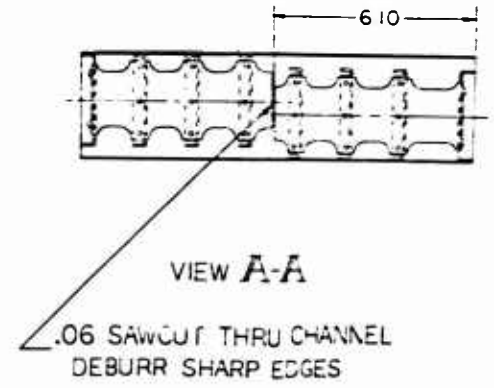

Figure 9. Universal Pocket.

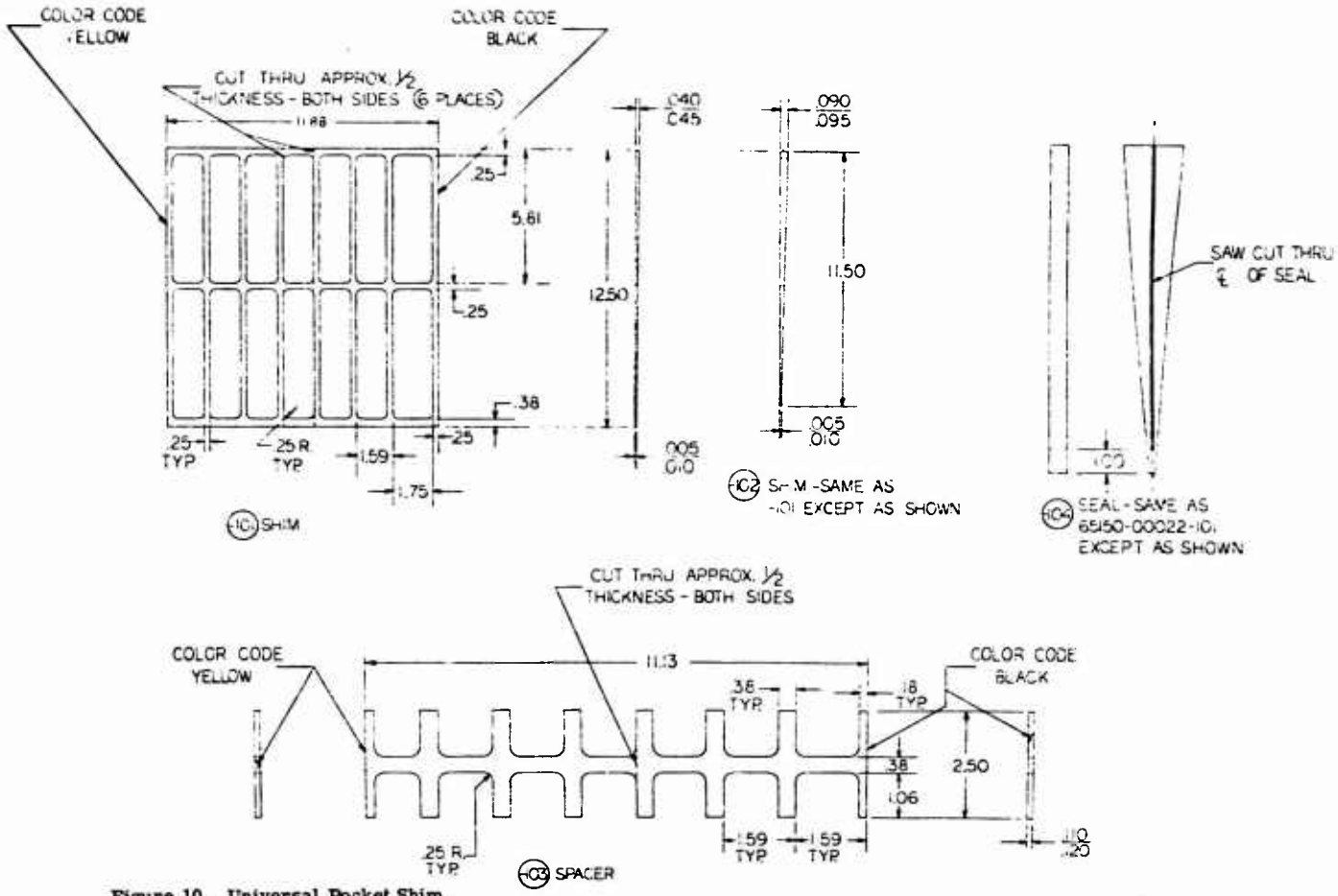

Figure 10. Universal Pocket Shim, Spacer and Seal.

Preceding page blank

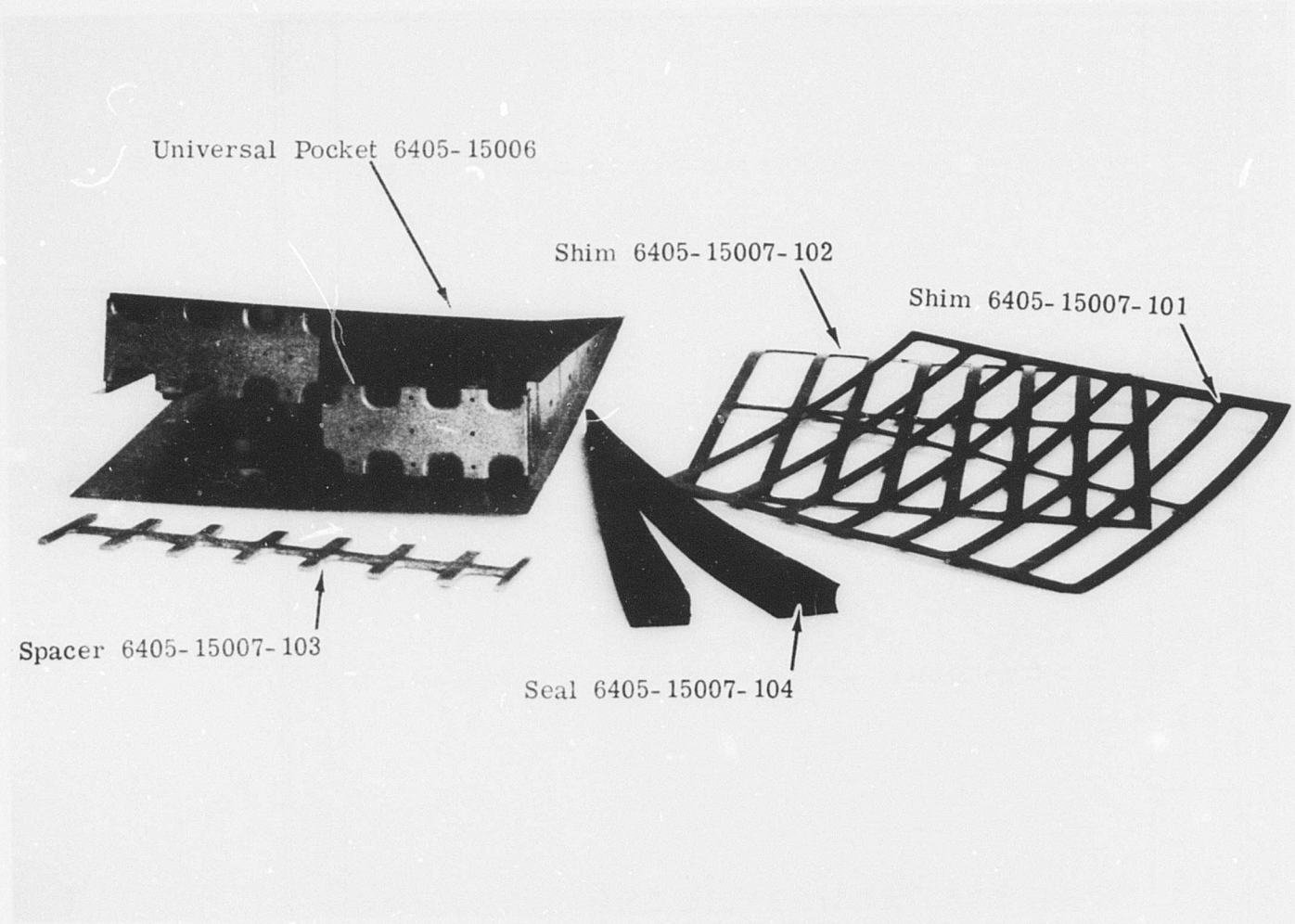

Figure 11. Universal Pocket Kit.

TABLE II. SHIM AND SPACER REQUIREMENT (QTY PER POCKET)

Pocket * Position No.	6405-15007-101 Shim (.040 in.)	6405-15007-102 Shim (.090 in.)	6405-15007-103 Spacer
2	0	0	2
3	0	0	2
4	0	0	2
5	0	0	2
6	0	0	1
7	1	0	1
8	1	0	1
9	1	0	1
10	1	0	0
11	1	0	0
12	1	0	0
13	1	0	0
14	1	0	0
15	1	0	0
16	0	1	0
17	0	1	0
18	0	1	0
19	0	1	0
20	0	1	0
21	0	1	0
22	0	1	0
23	0	1	0
24	0	1	0
25	1	1	0
26	1	1	0
27	0	2	0
28	0	2	0

* See Figure 7 for pocket positions.

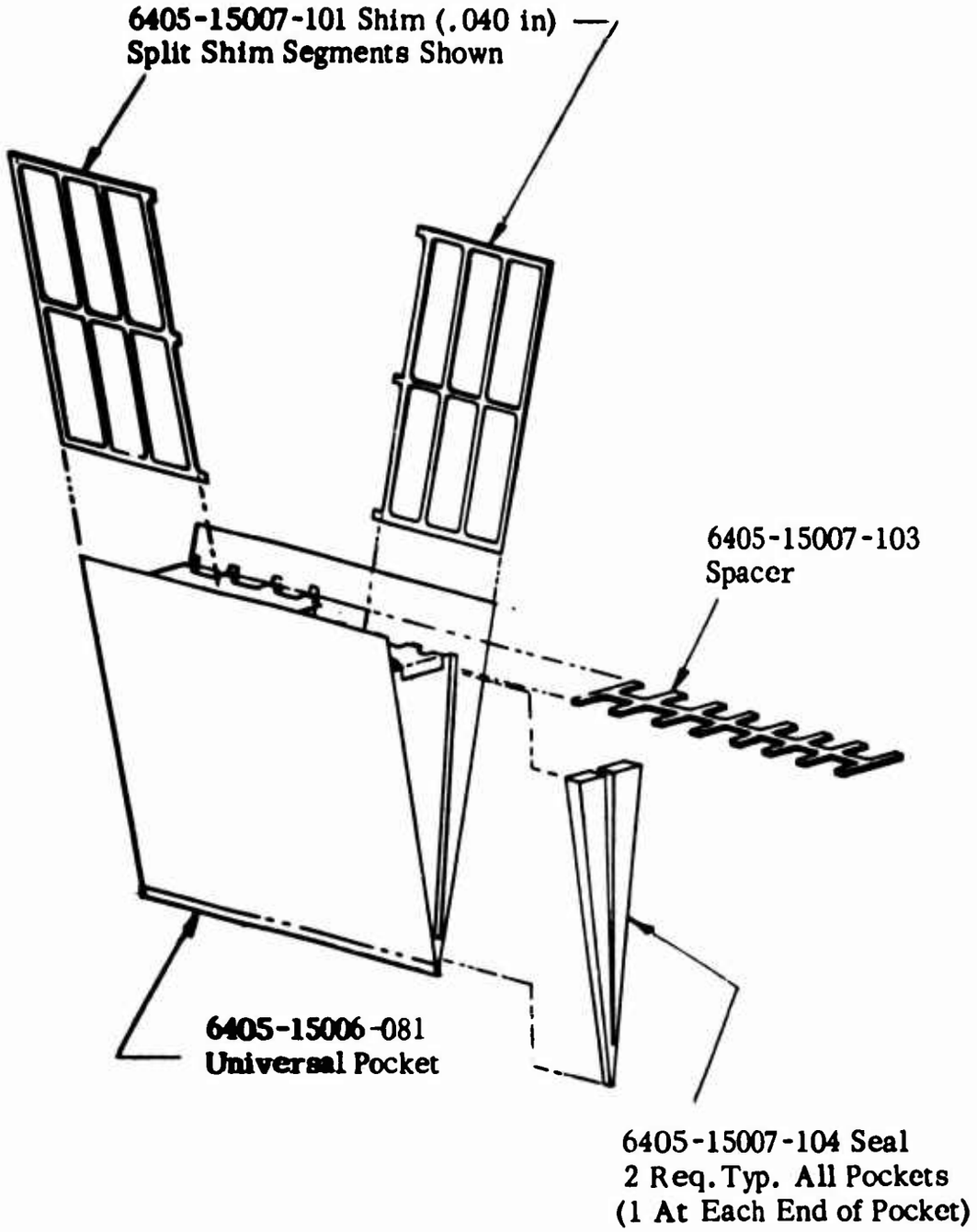

Figure 12. Shim and Spacer Requirement for a Typical Pocket - Position No. 7.

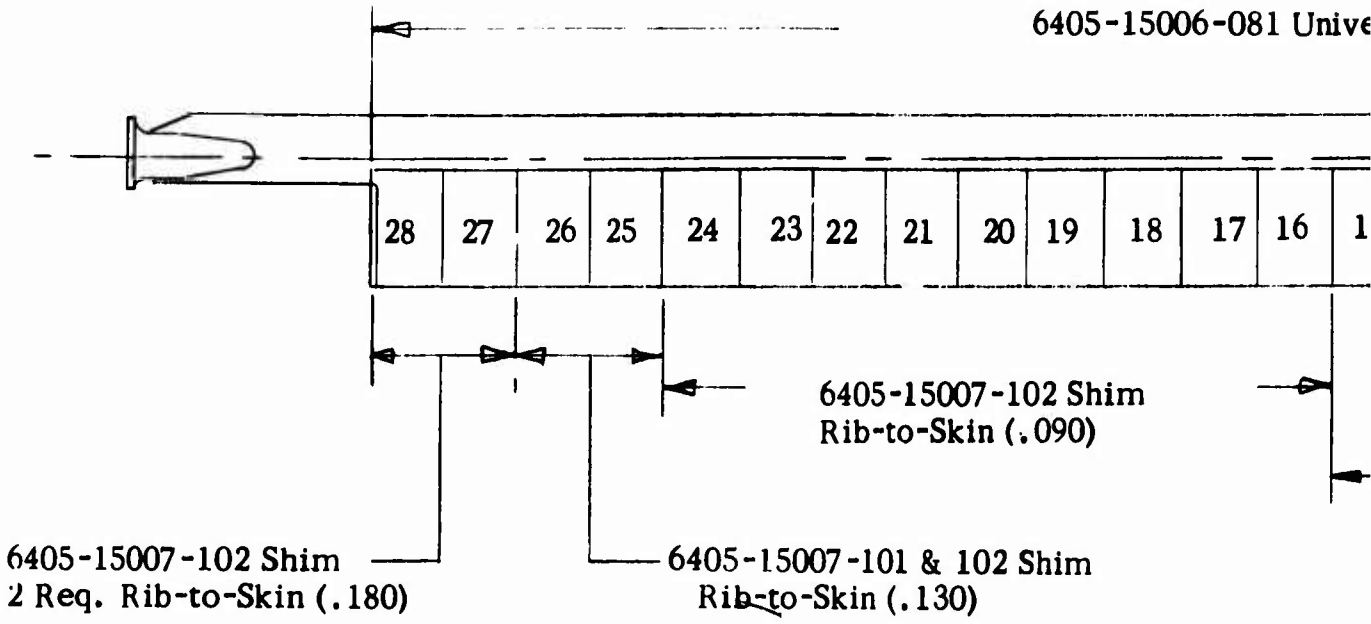
6405-15006-081 Unive
28
27
26
25
24
23
22
21
20
19
18
17
16
1
6405-15007-102 Shim
Rib-to-Skin (.090)
6405-15007-102 Shim
2 Req. Rib-to-Skin (.180)
6405-15007-101 & 102 Shim
Rib-to-Skin (.130)

A

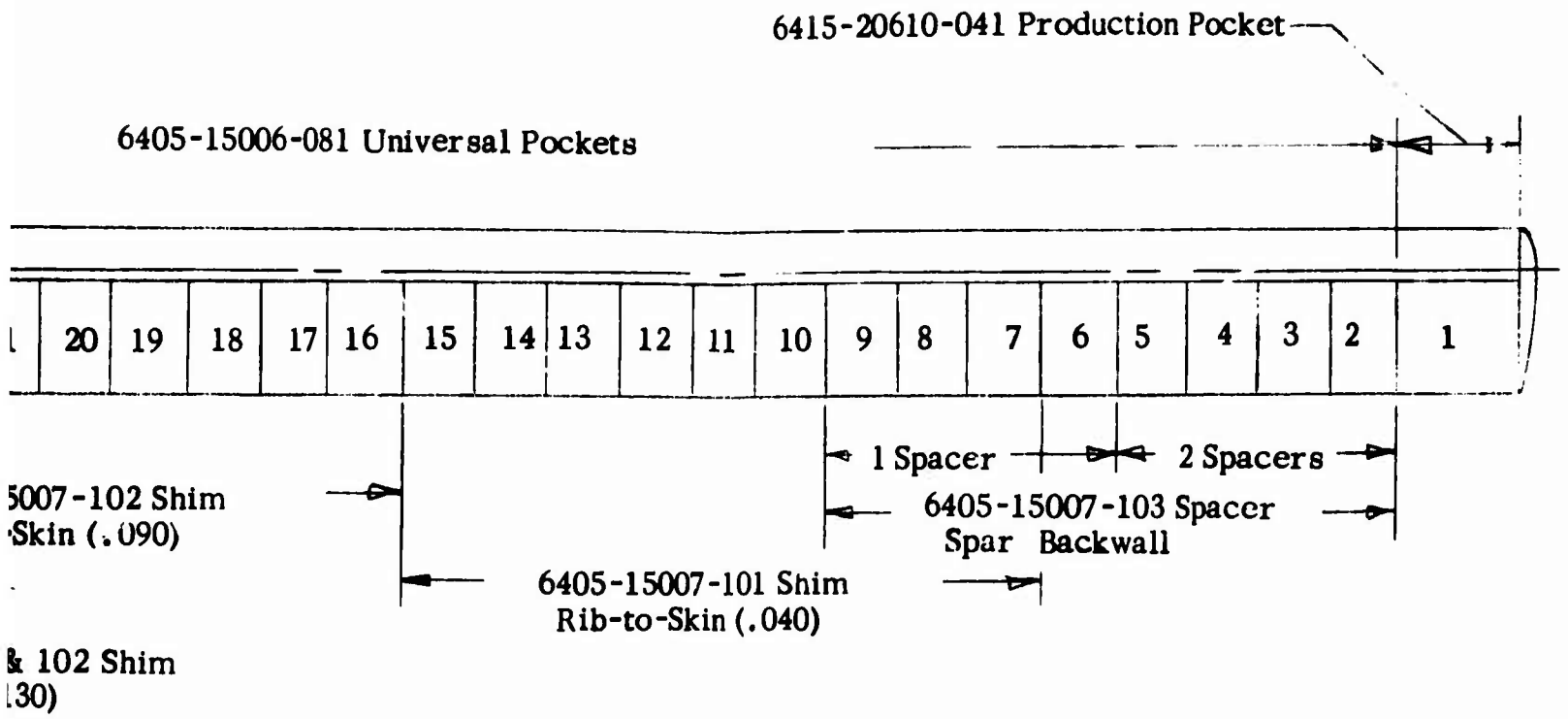
6415-20610-041 Production Pocket
6405-15006-081 Universal Pockets
20
19
18
17
16
15
14
13
12
11
10
9
8
7
6
5
4
3
2
1
1 Spacer
2 Spacers
5007-102 Shim
Skin (.090)
6405-15007-103 Spacer
Spar Backwall
6405-15007-101 Shim
Rib-to-Skin (.040)
& 102 Shim
30)

B

spacers are selected to fit between the spar backwall and the pocket channel for the outboard 8 pockets to account for the spar backwall thickness changes. Two .120-inch-thick spacers are required for pockets 2 through 4. One spacer is required for pockets 6 through 8. Inboard of pocket number 9, no spacers are required since the spar backwall chordwise position remains a constant. Two backwall steps occur at the center of pockets numbers 5 and 9; see Figure 7. Therefore, the backwall spacers will be grooved to facilitate separating, when they are to be used in either of these two locations. When used in these locations, they will be snapped in half; one segment will be used and one segment will be discarded. The spacers will be color-coded to identify the segment to be used and to show its location with respect to the pocket.

In use, the universal pocket kit will include detailed written instructions for the selection of the proper shims and/or spacers for each pocket position.

Preceding page blank

UNIVERSAL POCKET FABRICATION AND TEST

Universal pockets were fabricated and installed on test blade spar sections using the current production adhesive system. Proof load tests were conducted, and measurements of pocket/spar assembly airfoil compatibility were made. Subsequently, the operational suitability and design limitations of adhesively bonded pockets were assessed with regard to aerodynamic performance, vibration, blade tracking, aeroelastic stability and erosion.

DETERMINATION OF POCKET PROOF LOADS

The airload distribution across the airfoil from the leading edge to the trailing edge is determined for the most severe loading condition, a symmetrical dive and pullout at V = 140 knots, gross weight of 47,000 lb, and a load factor of 2.0. The airload at any given radial blade station consists of the lifting load as shown in Figure 13 plus an additional load due to compressibility effects at Mach numbers above .6. (The requirement and procedure for this computation are described in Reference 1.) The combined load at any given radial station is a function of azimuth position; maximum lifting airload occurs at $\Psi = 315°$ while maximum compressibility load occurs at $\Psi = 90°$. The combined maximum load at pocket number 2 occurs at $\Psi = 180°$, while at pocket number 7 maximum load occurs at $\Psi = 135°$. The number 2 pocket was selected for testing since it is the most outboard universal pocket; consequently, it has the highest applied loading. The number 7 pocket was selected for testing because it is the most highly loaded pocket which has a pocket shim installed.

Distribution of the lifting airload, equal to 1115 lb/ft for pocket number 2 at $\Psi = 180°$, is accomplished using the theoretical pressure distribution for a 0012 series airfoil from Reference 2. The compressibility load is determined using the equation

$$L = .35 \left[\frac{M}{M_{cr}} - 1 \right]^{1/2} \rho \frac{V^2}{2}$$

where M = Mach number = .69
M_{cr} = critical Mach number = .42
ρ = .002378 slugs/ft^3
V = 237 ft/sec

as prescribed in Reference 1. A compressibility load of 197.2 lb/ft^2 is obtained at pocket number 2 and azimuth position $\Psi = 180°$. This airload is applied to the aft 30 percent of the airfoil section per Reference 1.

The calculated shear and moment distribution across the airfoil is shown in Figure 14 for pockets 2 and 7. The ultimate pocket design proof load is equal to these loads multiplied by a 1.5 safety factor; the ultimate proof load for pocket number 2 is 565 lb and for pocket number 7 is 396 lb, as shown in Figure 15. The yield proof load is equal to the calculated loads multiplied by a 1.15 safety factor. Yield proof load for pocket number 2 is 433 lb and for pocket number 7 is 304 lb.

Distribution of the test loads to be applied during the pocket proof loading tests is shown in Figure 15, where the pocket proof load is applied in four increments corresponding to the pads on the "whiffletree" test fixture (Figure 16).

Distribution of the airload across the airfoil of an H-53 blade was measured by Sikorsky Aircraft during a recent test program. Test measurements were taken at five chordwise locations and several spanwise locations during the program.

At a velocity of 140 knots and a gross weight of 40,650 lb, a maximum shear load of 130 lb was obtained at the spar backwall for pocket number 2. This can be compared with the 565-lb pocket design proof load, and indicates the large degree of conservatism included in the calculated proof loads.

POCKET PROOF LOAD TEST SETUP

Test specimens for the universal pocket proof load tests were fabricated by bonding the universal pockets to 24-in.-long sections of a CH-54B spar in the standard production pocket bonding fixture utilizing production procedures, adhesives and quality control standards. Eight specimens were fabricated: three universal number 2 position pockets, three universal number 7 position pockets, and two production position number 2 pockets for comparison purposes.

Test equipment used consisted of a Riehle tensile testing machine (60,000 lb capacity), a static bond test "whiffletree" and support assembly fixture shown in Figure 17, and a standard dial indicator for measuring deflection of the pocket. The specimen was placed in the support assembly test fixture which grips the spar on either side of the pocket and supports the specimen in the test machine. The "whiffletree" loading fixture was positioned on the upper surface of the pocket as shown in Figure 17. The "whiffletree" distributes the test machine applied load over the surface of the pocket in accordance with the distribution of loads calculated for the pocket in Figure 15. A dial indicator is placed to read the deflection of the pocket at the trailing edge under the applied loads. Figure 18 is a photograph of the complete test setup.

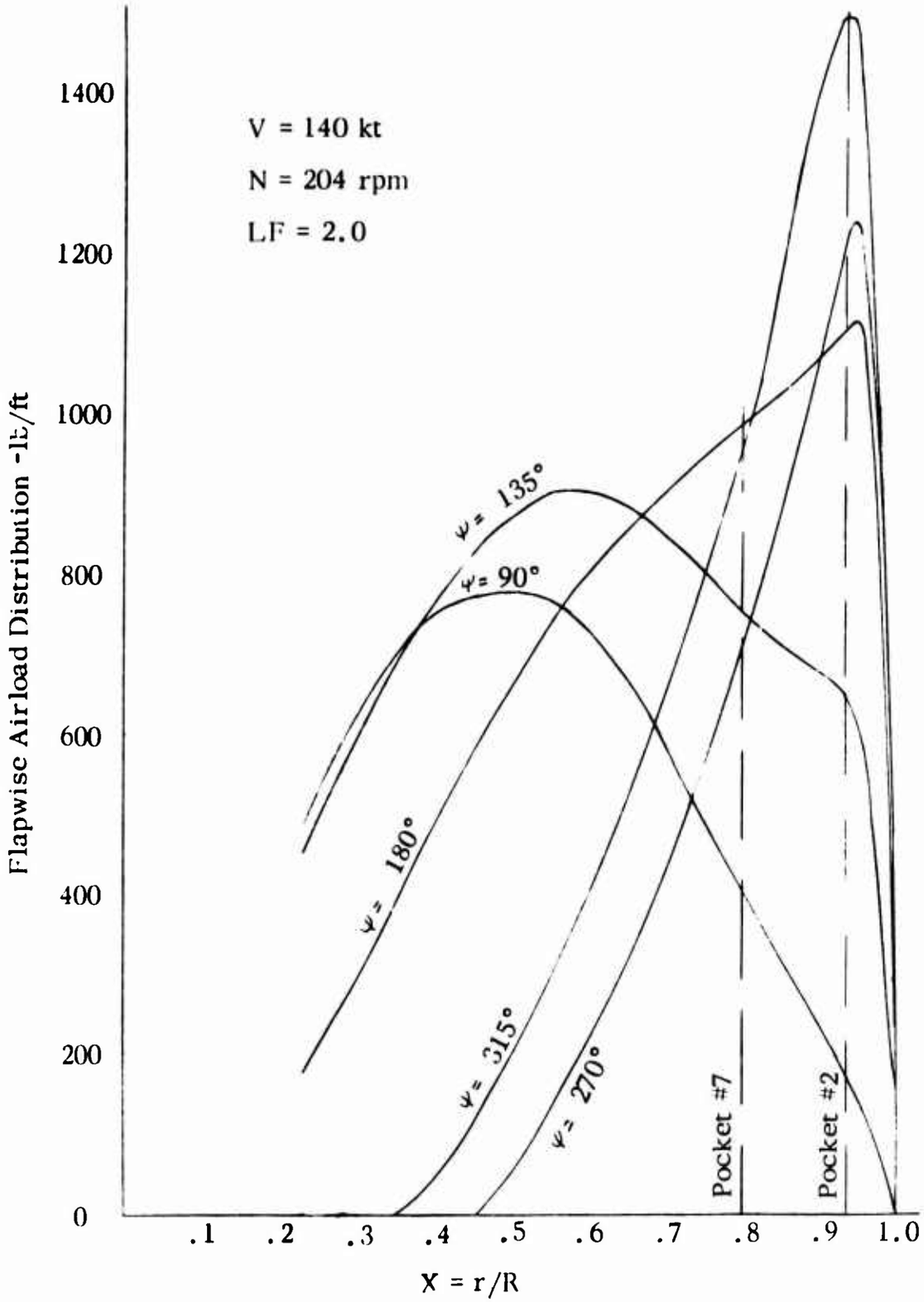

Figure 13. Flapwise Airload Distribution for CH-54B.

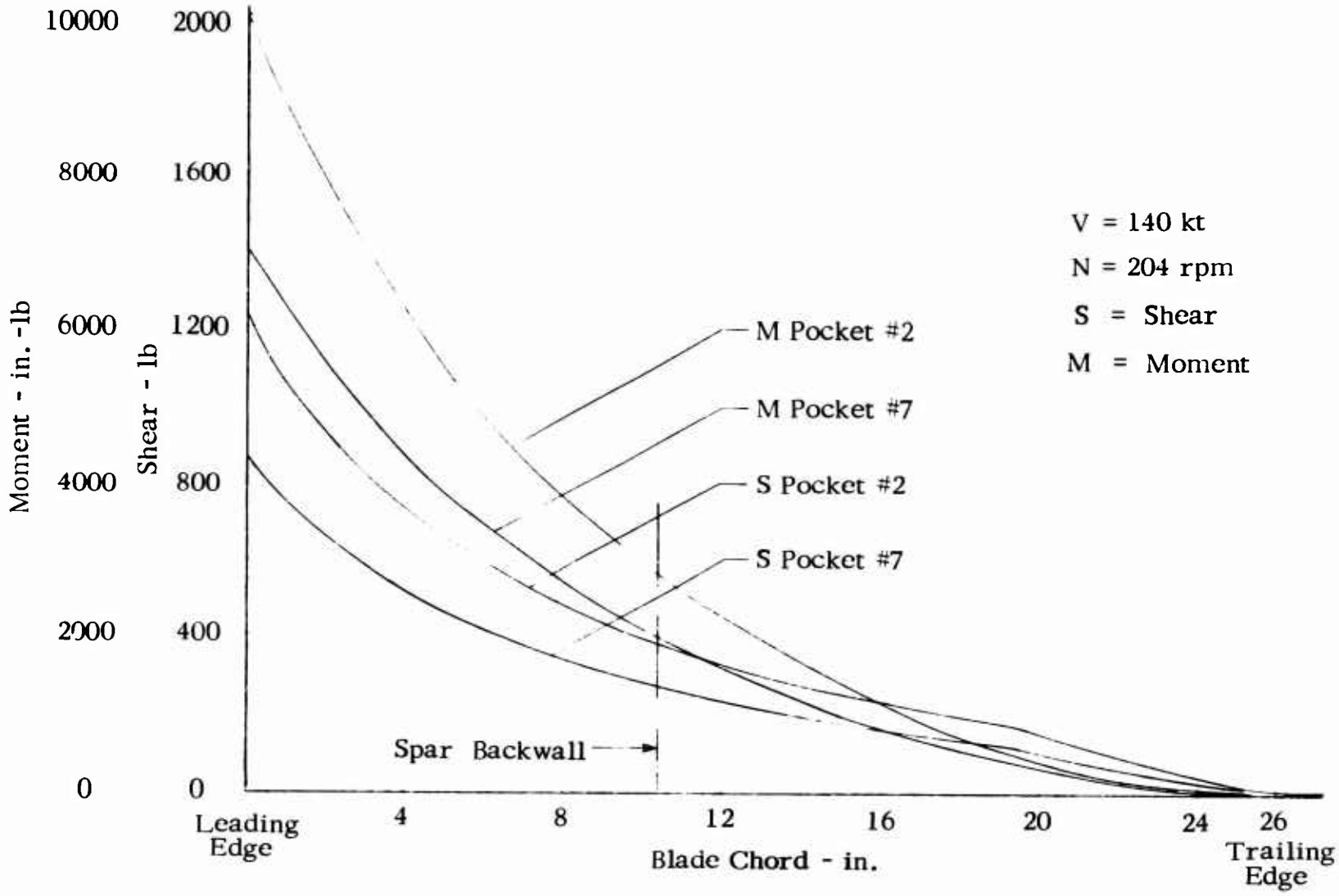

Figure 14. Chordwise Airload Shear and Moment for CH-54B.

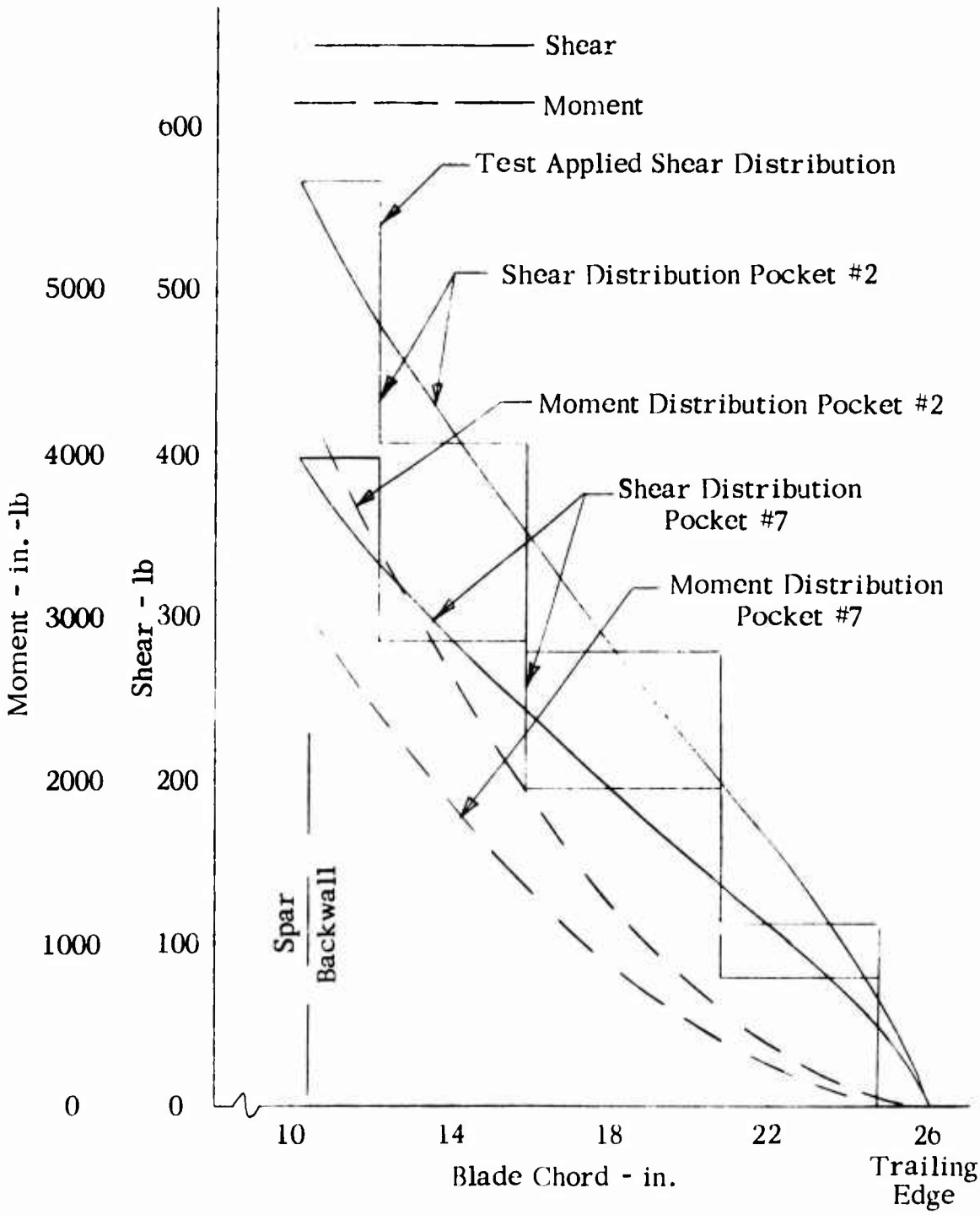

Figure 15. Production Design Proof Loads for CH-54B.

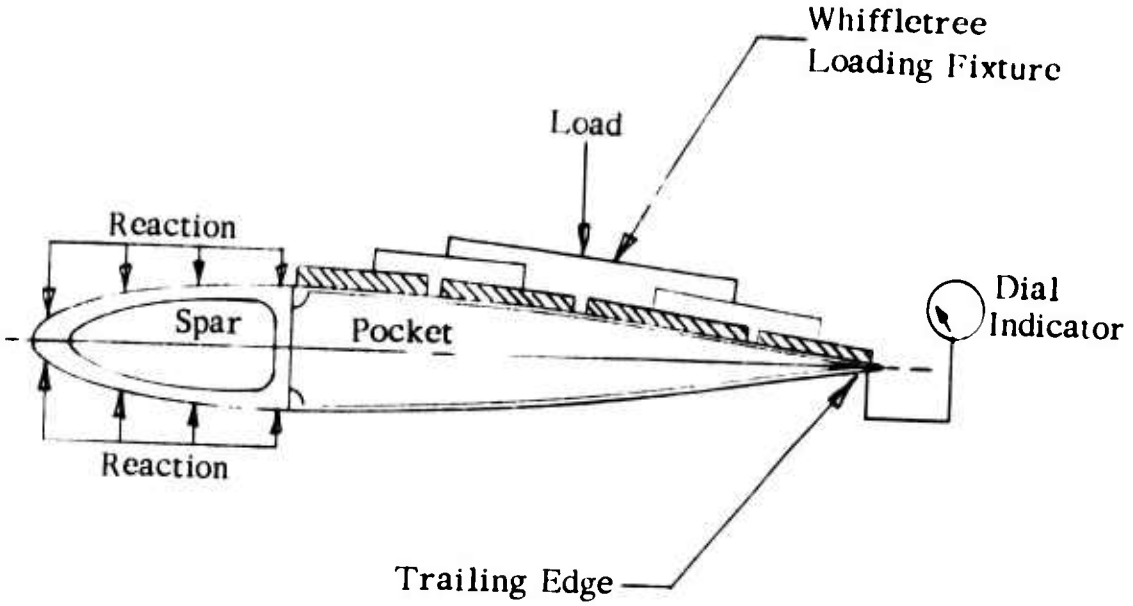

Figure 16. Proof Load Pocket Specimen.

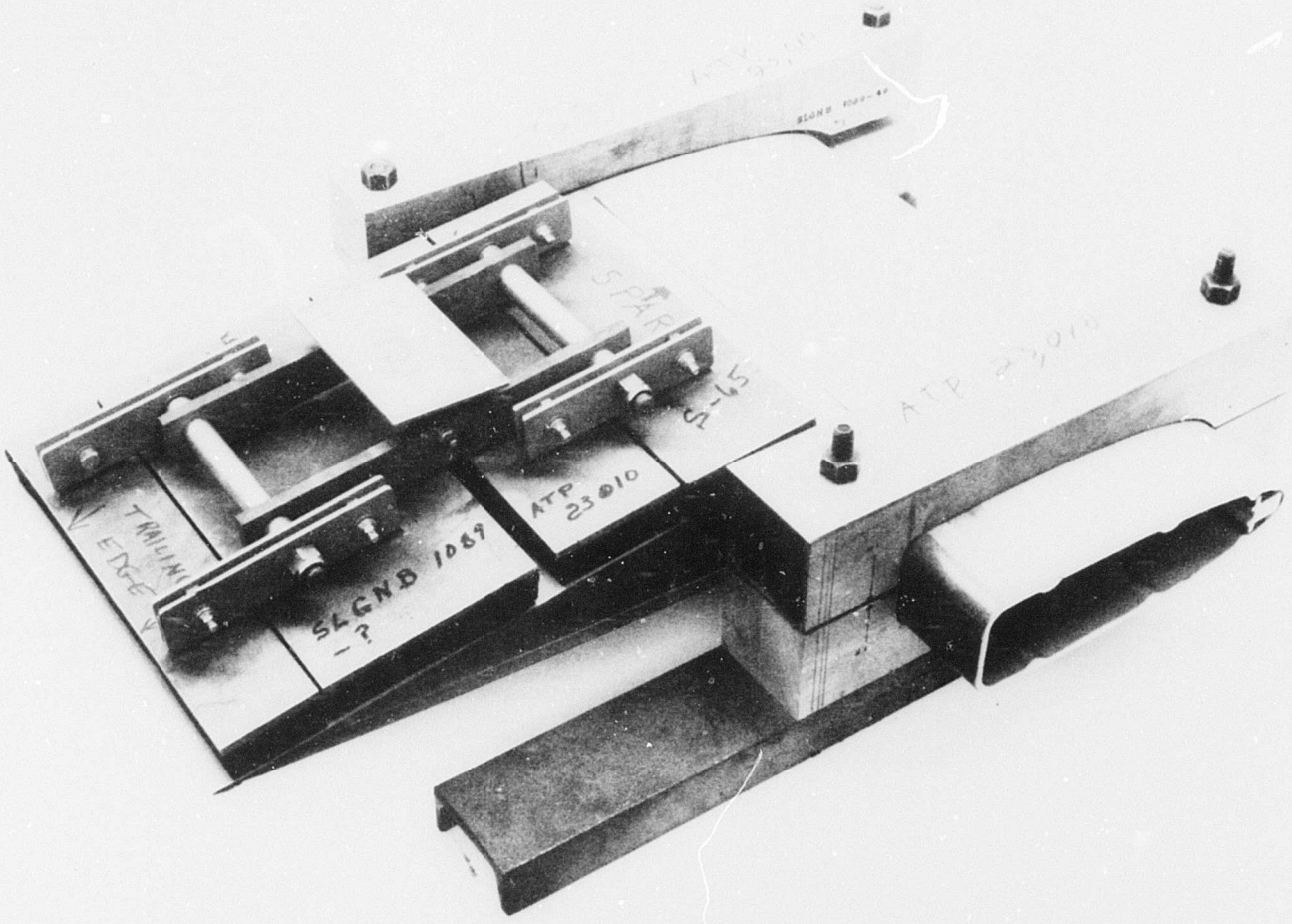

Figure 17. Static Proof Load Whiffletree
Test Fixture and Support Assembly.

POCKET PROOF LOAD TEST PROCEDURE AND RESULTS

The pocket specimens were tested at the ambient atmospheric temperature and humidity conditions present in the test laboratory. A compressive load was applied to the pocket in increments of 100 lb, and dial indicator measurements of deflection were made at each load increment. The deflection was noted at the load corresponding to the calculated pocket yield proof load. The load was then released and the pocket examined for visual evidence of damage and distortion (permanent set). Load was then increased to the ultimate proof load, recording deflection at each 100-lb load increment. The pocket was then loaded to failure.

All six universal pockets sustained loads well in excess of the required ultimate proof load of 565 lb for pocket number 2 and 396 lb for pocket number 7. All of the universal pockets tested exceeded the proof load of the minimum strength production pocket tested. This is in spite of the fact that the production pocket has .020-inch-thick skin (for pockets 2 through 8) and the universal pocket has only .016-inch skin. The normal failure mode of a pocket is buckling of the skin on the compression side of the pocket in an unsupported area between the backwall channel of the pocket and the tangency point of the pocket skin and the spar, as shown in Figure 19. This area of skin is not supported by ribs or spar because of the spar radii and is therefore relatively weak in compression. In the universal pocket, paste adhesive was applied to the unsupported skin area to provide additional stability for the skin in compression, therefore increasing its load-carrying ability. (Note: The application of additional adhesive in this unsupported area will be part of the normal universal pocket installation procedure.) The failure loads for each of the pockets tested are shown in Table III.

The deflections measured at the trailing edge of the pocket are shown in Figure 20 for the universal and production pockets number 2. Examination of Figures 20 and 21 indicates that all pockets tested exceeded their yield proof loads, as evidenced by the linear load/deflection curves up to and beyond the yield proof loads. The lowest yield load for any of the universal pockets was 500 lb for a number 7 pocket, which had a required yield proof load of 304 lb. Deflections of the universal pockets were slightly lower than for the production pockets tested. This increase in stiffness is due to the additional support given to the unsupported skin between the channel and tangency point of the spar radius on the compression side by the additional bead of paste adhesive. A paste adhesive used in the field to bond on a universal pocket would normally fill this area. Number 7 universal pocket deflected slightly less under a given load than universal pocket number 2 because of the increased pocket depth at location 7 and also because of the increased skin stiffness resulting from the phenolic shim between the ribs and the skin.

TABLE III. FAILURE LOADS - UNIVERSAL POCKETS (LB)			
Pocket	Test #1	Test #2	Test #3
Universal Pocket #2	1760	1800	1708
Universal Pocket #7	1505	1655	1930
Production Pocket #2	1725	1460	-

UNIVERSAL POCKET AIRFOIL CONTOUR VARIATION

The theoretical variation of the airfoil contour due to the universal pocket was determined for each of the pocket positions from pocket numbers 2 through 28. The contour variation was determined as a deviation from the nominal airfoil contour and is shown in Table IV. Table IV also shows the variation present in the standard CH-54B production blade. Examination of the table shows that the contour variations along the blade are small; the maximum variation occurs at pocket number 28 which is .019 in. below the nominal contour aft of 40 percent of the blade chord.

Measurements were made of the contour of an actual universal pocket 14 to compare with the theoretical variations discussed above. A standard contour measuring template for the CH-54B blade was used, together with a "thickness" gage, to measure any gaps between the blade and the contour template. The procedure is shown in Figure 22, which illustrates how closely the template conforms to the universal pocket. The actual measured contour variation for pocket number 14 was a maximum of .008 inch below nominal contour at a point on the pocket 1 to 2 inches aft of the spar. At pocket number 14, the theoretical contour variation shown in Table IV is .013 inch below contour at this point. Figure 23 illustrates the contour variation measured across universal pocket number 14. Figure 24 is a schematic of the airfoil contour of the blade with the universal pocket and is used in conjunction with Table IV.

EFFECT OF THE UNIVERSAL POCKET ON AERODYNAMIC PERFORMANCE

The universal pocket will result in very small variation in the airfoil contour from the production contour, as described in the preceding paragraph. In all cases, only the aft 60% of the blade airfoil contour is affected; the forward 40% is formed by the blade spar. Examination of

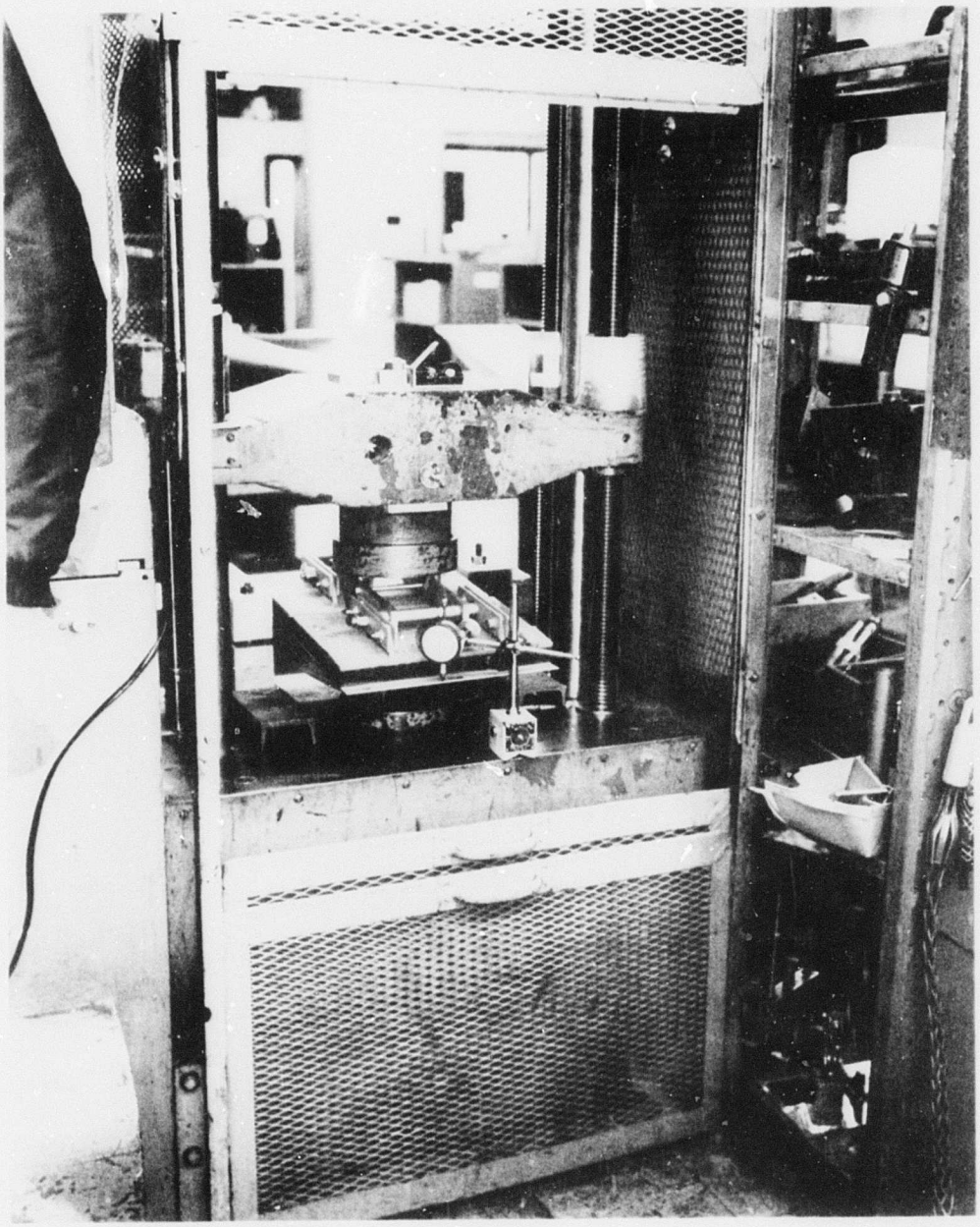

Figure 18. Static Proof Load Test.

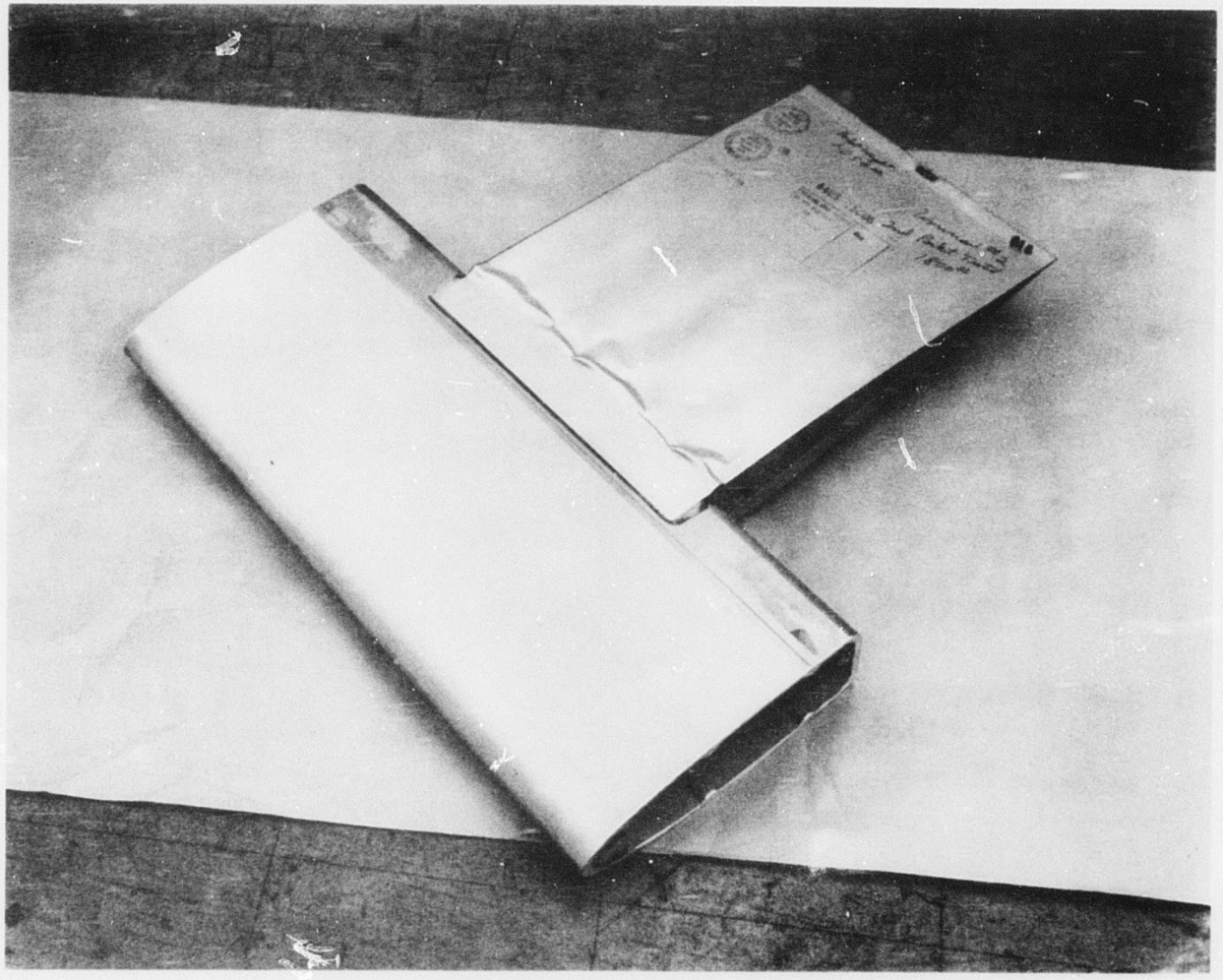

Figure 19. CH-54 Universal Pocket Proof Load Specimen After Test.

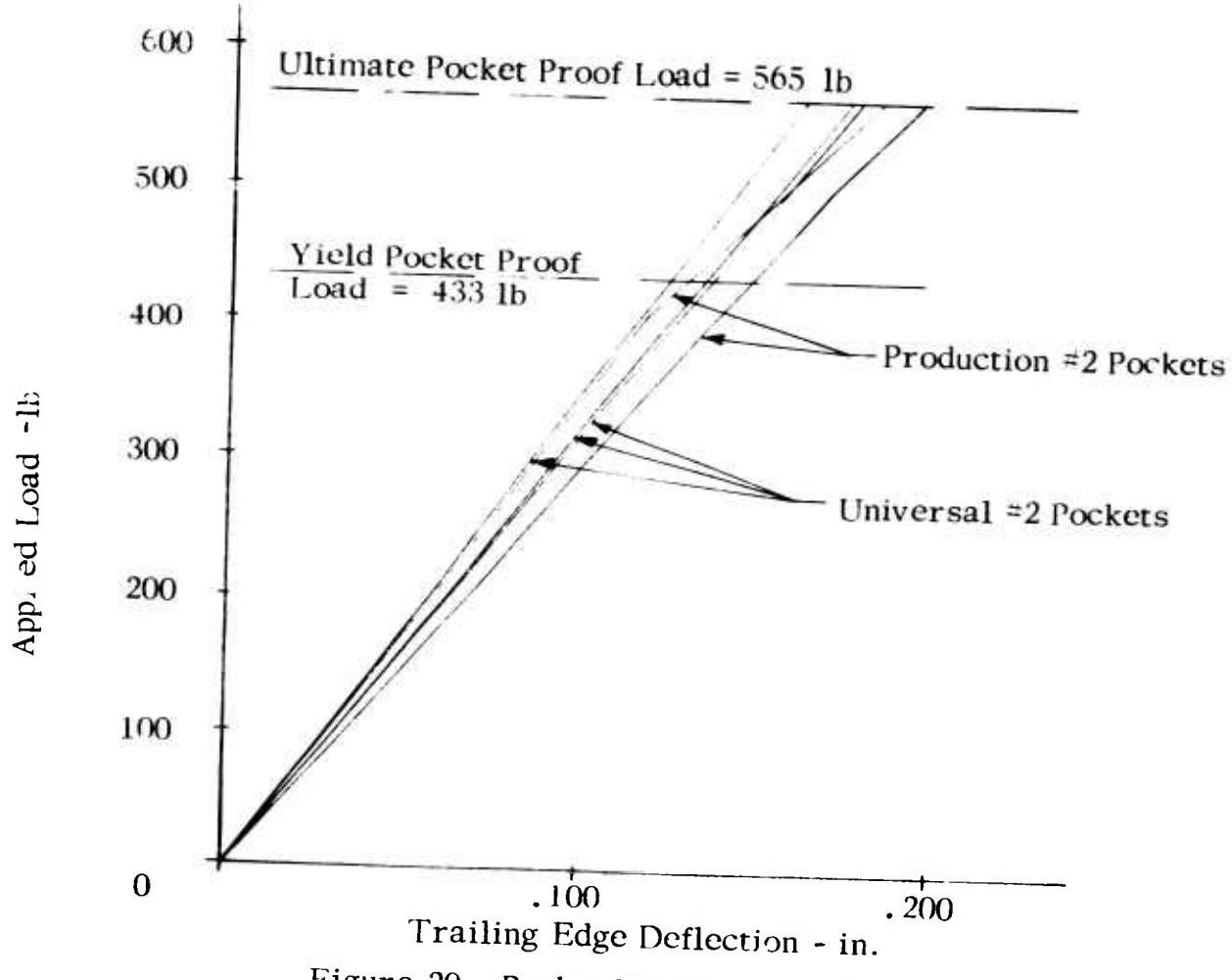

Figure 20. Pocket Trailing Edge Deflection Vs. Applied Load for Universal No. 2 Pockets.

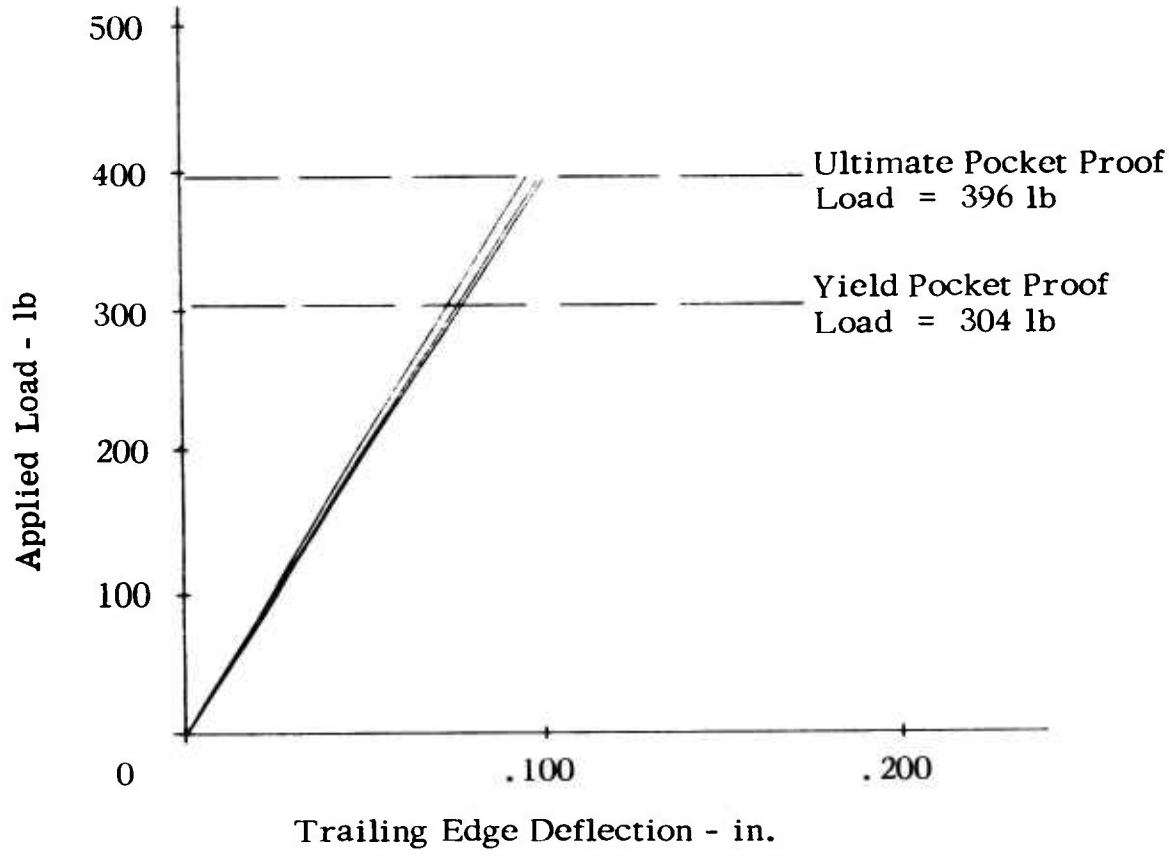

Figure 21. Pocket Trailing Edge Deflection
Vs. Applied Load for Universal No. 7 Pockets.

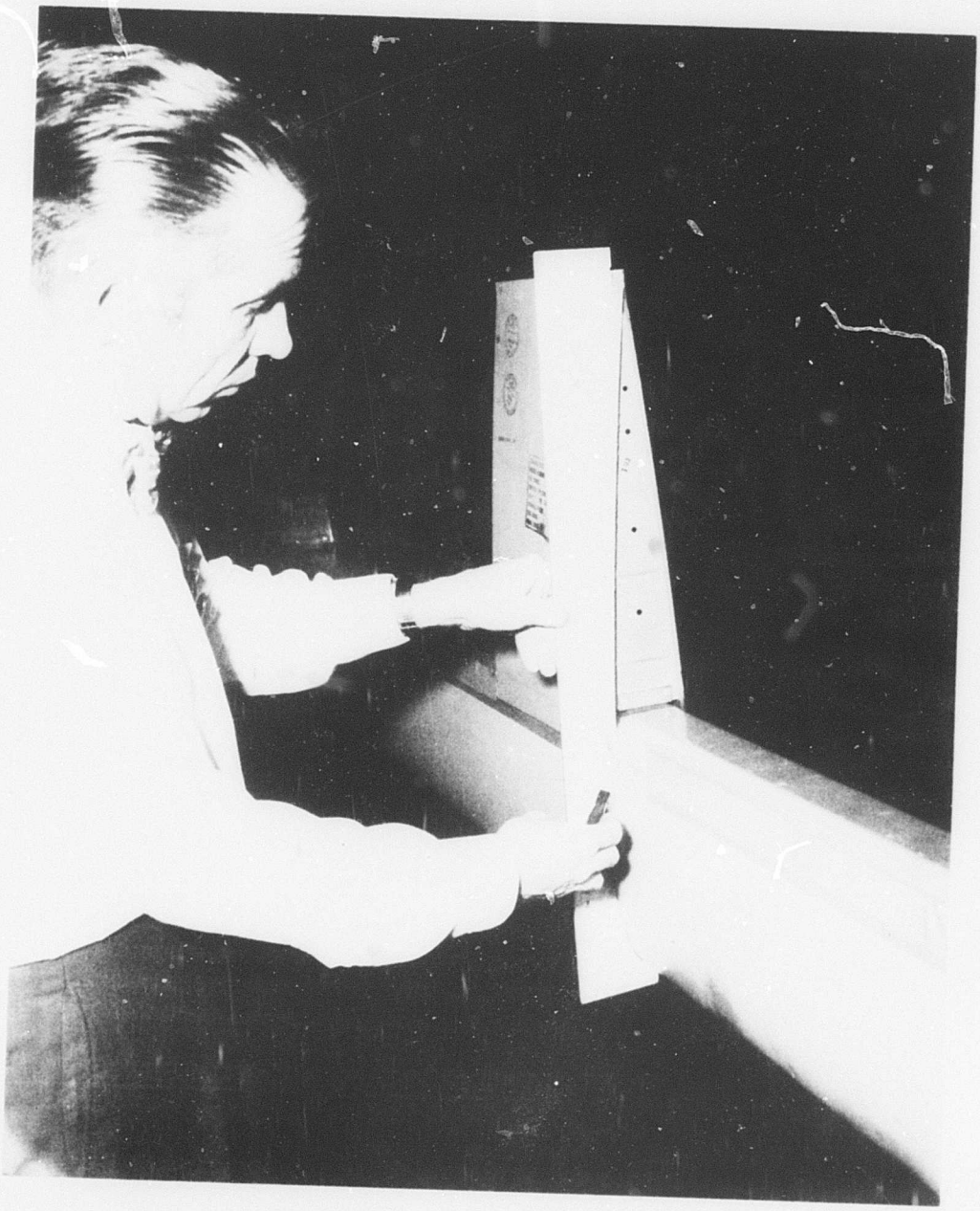

Figure 22. Measuring Contour Variations of a Universal Pocket at No. 14 Pocket Location.

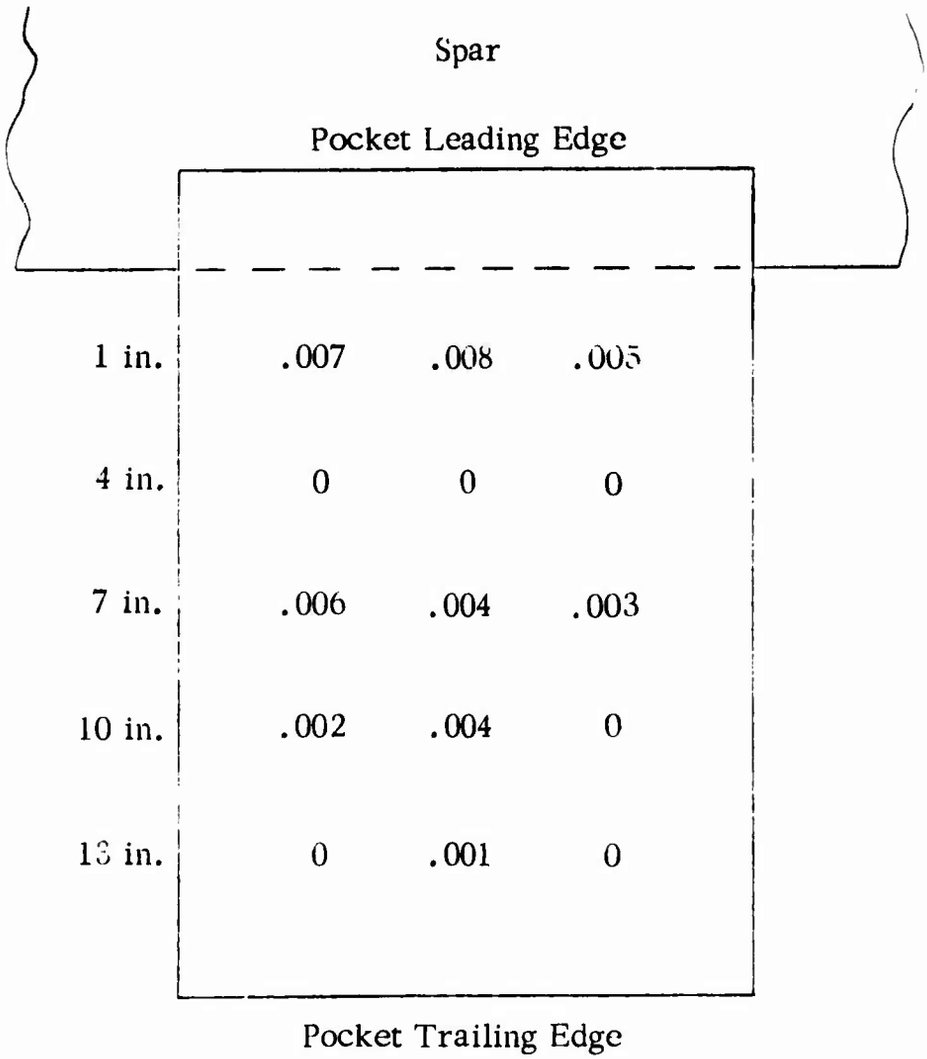

Figure 23. Contour Variation Across Universal Pocket No. 14.

Figure 24 and Table IV indicates that the maximum protrusion or indentation to be expected over the major portion of the blade is .010 inch. To evaluate the effect of this variation in contour from the nominal on the aerodynamic characteristics of the airfoil section, it is necessary to consider only data on airfoils that have chordwise pressure distributions similar to those of Sikorsky helicopter rotor blades. This is necessary in order to have the same aerodynamic environment in which to evaluate the boundary layered disturbance interaction. Figures 25 and 26 present experimental data on the effect of adding surface waviness to the aft 63% of an NACA 23012 airfoil. This data is particularly applicable to the present problem because the NACA 23012 airfoil has a chordwise pressure distribution typical of the CH-54B rotor blade airfoil section. The experimental data shows that for the type of contour variation expected from the universal pocket, there will be no discernible effect on the aerodynamic behavior of the rotor blade.

EFFECT OF THE UNIVERSAL POCKET ON BLADE TRACK AND VIBRATION

The universal pocket replaces 13 different pockets used on the production CH-54B blade. The weights of these 13 production pockets fall into three weight groups, depending on the thickness of skin and the number of ribs used (Figure 7). The three weight groups are 1.28, 1.14 and 1.00 lb per pocket, the heaviest pocket being used outboard and the lightest one inboard. Since the universal pocket weight is the same for all pockets except for the weight of the spacers and shims, a certain small amount of unbalance will occur when pockets are replaced. The amount of unbalance will vary depending on which of the pockets is being replaced. Replacement of up to three pockets with no adjustment to the blade tip balance weights is anticipated. In the event that more than three pockets per blade are replaced, the balance weights will require minor adjustments in accordance with a simple, easily followed table to be supplied with the kit. The procedure will require removing the tip cap, by removing the screws securing it to the blade, and adjusting the number and/or position of the shim weights in accordance with the supplied table. In this manner, the spanwise weight moment and the dynamic pitching moment will be held within acceptable limits, therefore maintaining blade track and vibration levels within acceptable limits.

EFFECT OF THE UNIVERSAL POCKET ON AEROELASTIC STABILITY

The aeroelastic stability of a rotor blade is a function of the blade chord, mass distribution, center of pressure of the airfoil, structural stiffness, and elastic axis location. The universal pocket does not alter the blade chord, and since the pockets of the CH-54B blade are not structural, changes to the pocket will not affect either the structural stiffness or the

TABLE IV. CONTOUR VARIATION FROM NOMINAL (IN.)

Pocket	Universal		Production	
	A*	B**	A*	B**
1	-	-	-	-
2	.003	-	.004	-
3	0	0	0	0
4	-	.004	-	.004
5	-	.007	0	0
6	-	.011	.004	-
7	.005	-	0	0
8	.001	-	-	.004
9	.002	-	0	0
10	-	.001	0	0
11	-	.004	-	.003
12	-	.007	.003	-
13	-	.010	0	0
14	-	.013	-	.003
15	-	.015	0	0
16	.007	-	-	.003
17	.004	-	0	0
18	.001	-	.003	-
19	-	.002	0	0
20	-	.005	-	.003
21	-	.008	.003	-
22	-	.011	0	0
23	-	.014	-	.003
24	-	.016	.005	-
25	.004	-	0	0
26	-	.005	-	.008
27	.006	-	0	0
28	-	.019	0	0

* "A" Measurements are above contour per Figure 24.

** "B" Measurements are below contour per Figure 24.

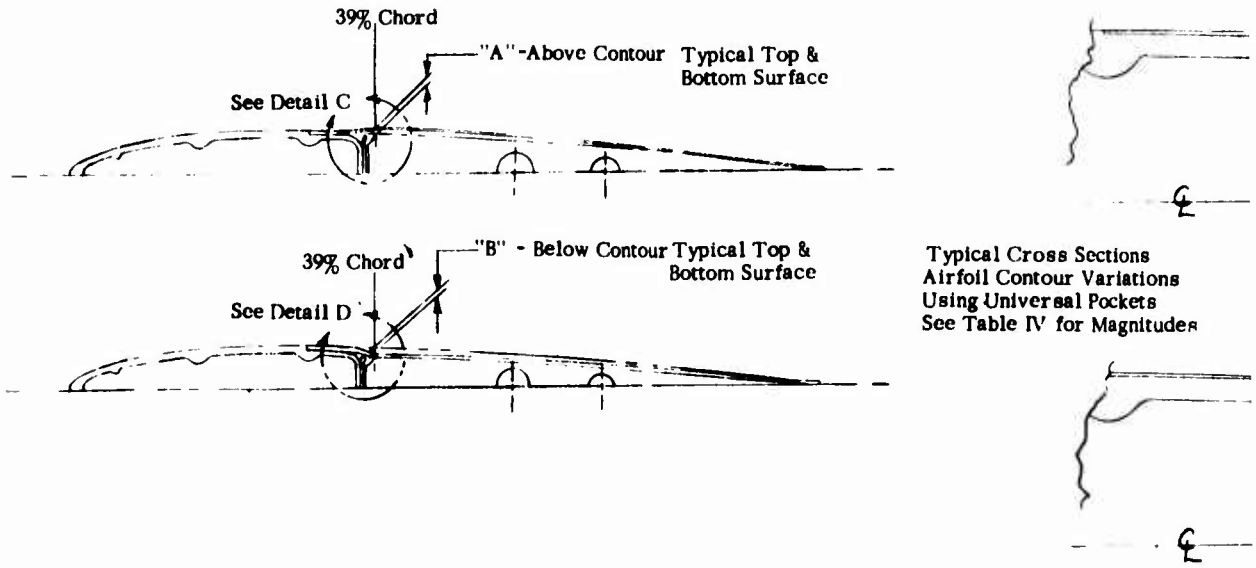

Figure 24. Schematic Rotary-Wing Blade Airfoil Contour - Universal Pocket.

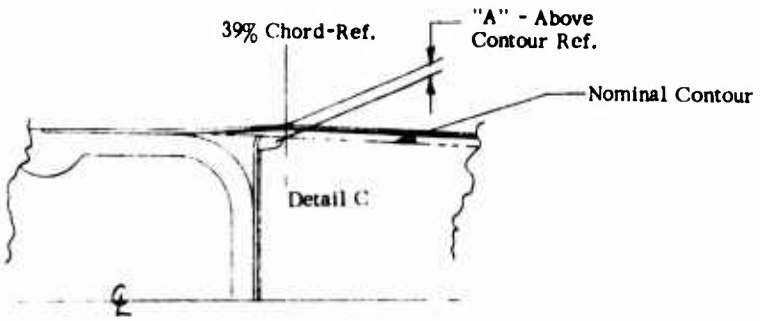

al Cross Sections
l Contour Variations
Universal Pockets
ible IV for Magnitudes

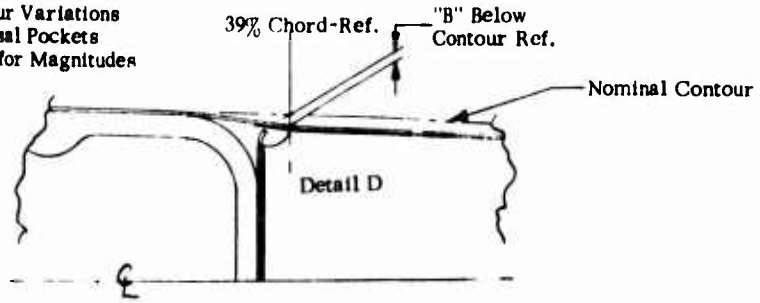

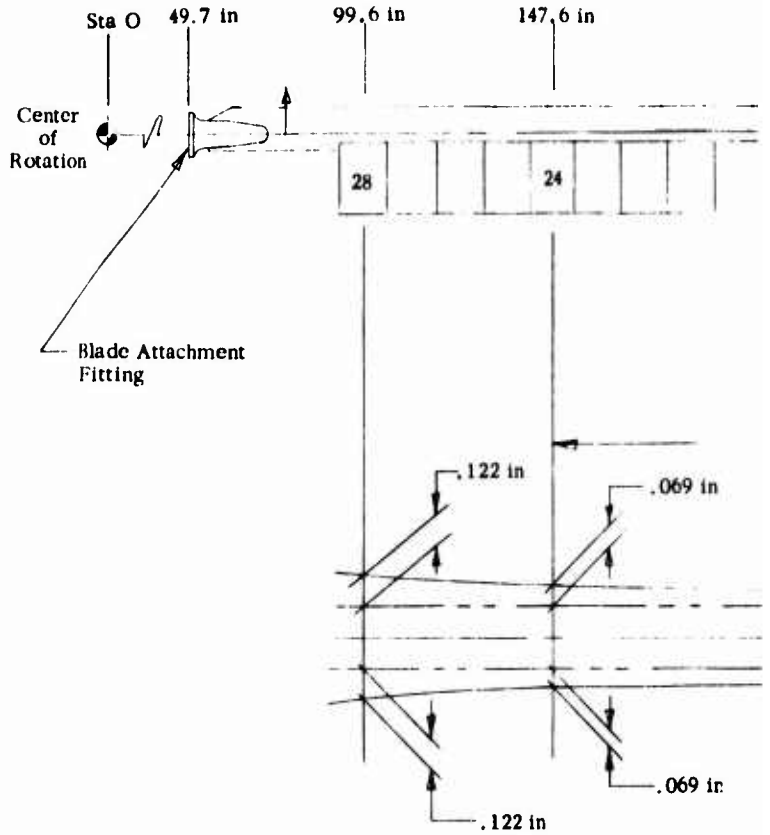

de
Pocket.

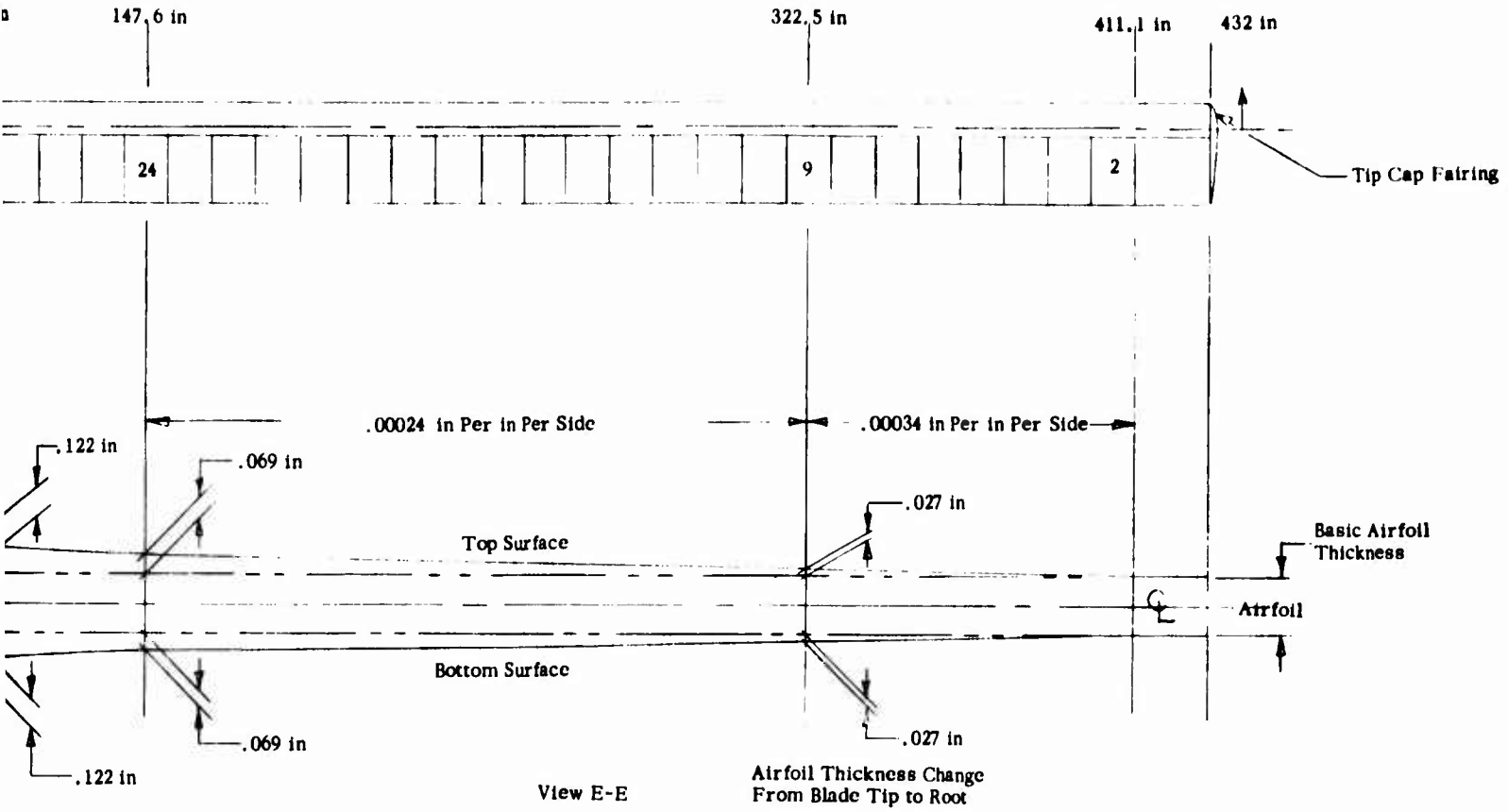
147.6 in
322.5 in
411.1 in
432 in
24
9
2
Tip Cap Fairing
.00024 in Per in Per Side
.00034 in Per in Per Side
.122 in
.069 in
.027 in
Top Surface
Basic Airfoil Thickness
Airfoil
Bottom Surface
.069 in
.027 in
.122 in
View E-E
Airfoil Thickness Change From Blade Tip to Root

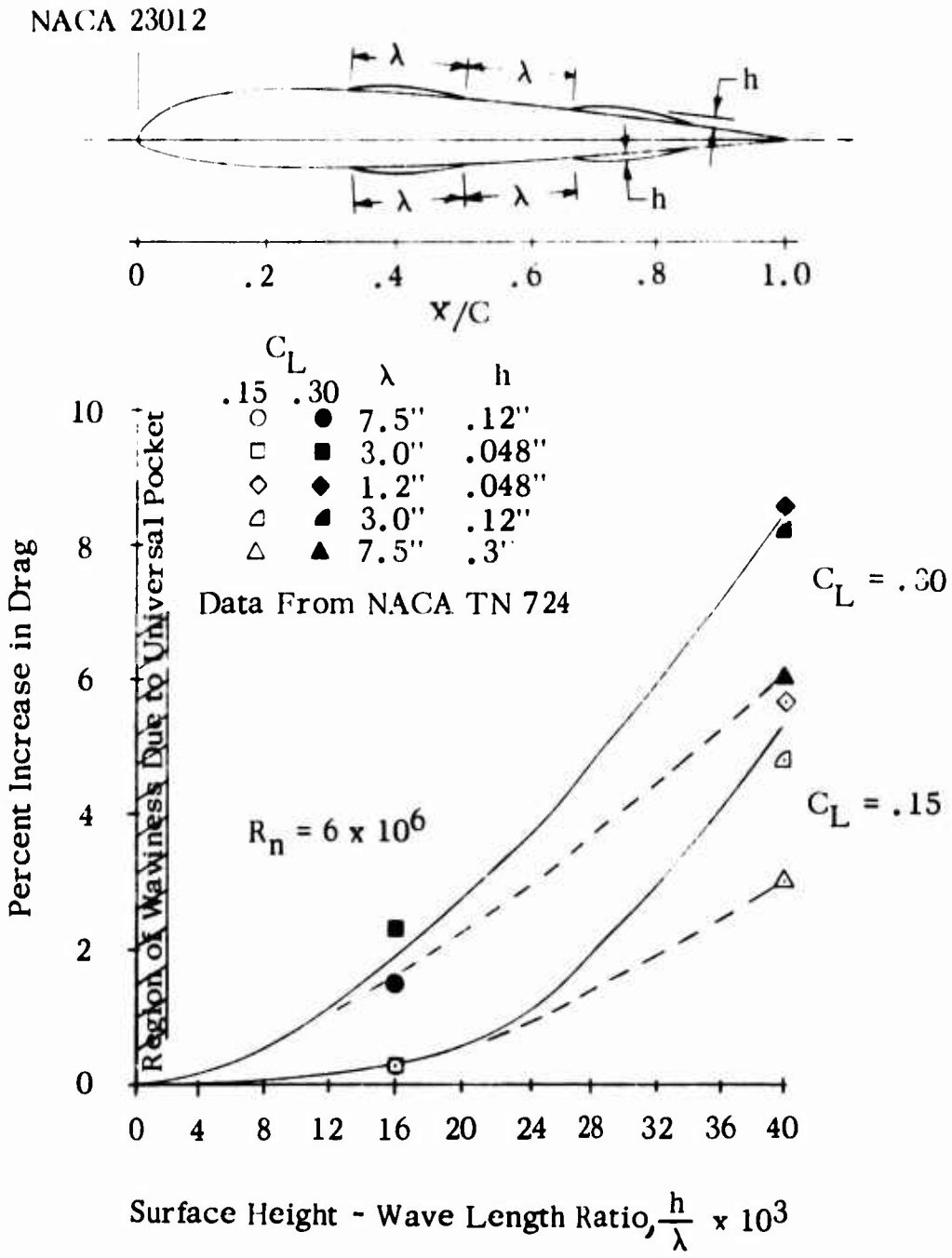

Figure 25. Effect of Surface Waviness on Wing Drag at a Full-Scale Helicopter Reynolds Number (R_n).

Preceding page blank

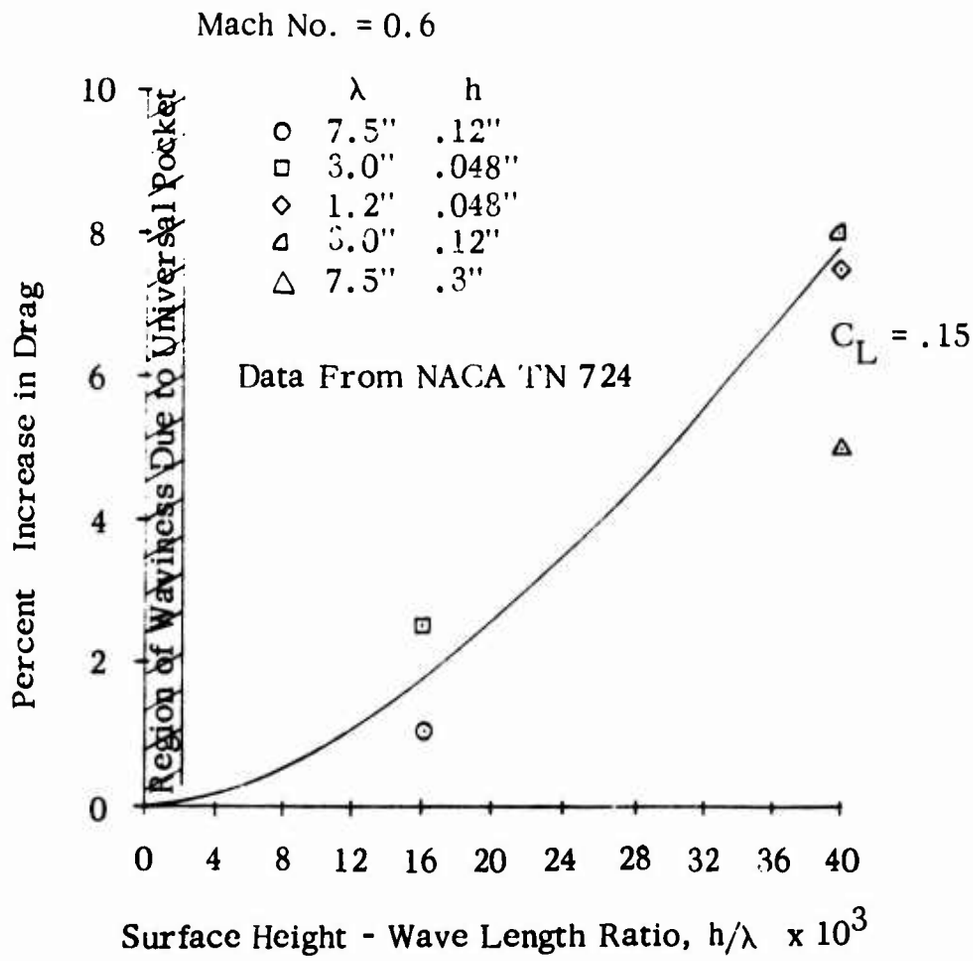

Figure 26. Effect of Surface Waviness on Wing Drag at a Full-Scale Helicopter Mach Number.

elastic axis position of the blade. Center of pressure is a function of the shape of the airfoil; significant changes in the contour could alter the location of the center of pressure and change the pitching moment characteristics of the airfoil. However, as discussed in preceding paragraphs, the variation of airfoil contour with the universal pocket is very small and therefore no changes in blade pitching moments will occur.

The universal pocket will vary the mass distribution of the blade to some small degree. The amount of the variation in mass varies from the tip to the root of the blade, with minimum variation at the outboard end of the blade and a larger variation on the inboard portion of the blade. The magnitude of this weight variation is about .005% of blade weight per pocket at the tip and .07% on the inboard portion of the blade. Previous analytical studies conducted on this blade, as well as other Sikorsky blades, have shown that mass changes many times the order of magnitude resulting from the universal pocket are required to make any significant changes in the dynamic characteristics.

The resistance to flutter instability of a rotor blade depends on the relative location of the center of gravity of the blade cross section and the elastic axis of the blade. A CG aft of the elastic axis is conducive to flutter problems, while a forward CG will reduce the likelihood of flutter problems. The universal pocket will move the CG slightly more forward at the outboard portion of the blade (that portion of the blade where flutter would be most critical). Inboard, the CG will be moved slightly aft, but since it is inboard, this will not cause any flutter instability problems.

It may therefore be concluded from the above that the universal pocket will have a negligible effect on blade response characteristics and will not have an adverse effect on aeroelastic stability.

EFFECT OF EROSION ON THE UNIVERSAL POCKET

Erosion will have no effect on the universal pocket, since the pocket skin material is the same as that used for the production pocket. Since protrusion above the nominal contour is so slight and is located aft of the maximum blade airfoil contour position (30% chord), the pocket will not be affected by erosion.

FIELD JIGGING

A lightweight (not to exceed 20 pounds) field jigging kit of simple design, capable of being utilized in the field by Army aircraft maintenance personnel, was to be designed and fabricated. The field jigging kit was to be capable of applying pressure to the pocket-to-spar bond line when universal pockets were bonded to blade spars in the field with an ambient temperature curing adhesive system. Each segment of the jigging was to be assembled into one complete tool to prevent loss of components in the field. The jigging kit is to be used and evaluated for pocket-to-spar bonding during subsequent tests.

Two universal pocket field jigging kits were designed; the first, an air bag concept, is shown in Figure 27. It consists of a fabric cover with rubber bag air cavities, a metal trailing edge channel for maintaining pocket alignment, and metallic hooks and eyes for securing the bag to the blade. The rubber air bags are positioned on the internal side of the fabric cover to apply bonding pressure to the complete bond areas of the universal pocket skin-to-spar and skin-to-rib areas. Air pressure is applied by a simple hand pump. The air bag fixture in Figure 28 is the better of the two different fixtures fabricated by different vendors; it performed well during tool tryouts. This fixture weighs 14 pounds but could be redesigned to an estimated weight of less than 10 pounds. An evaluation of the two different jigging kits after their use in bonding pockets to spars for the Adhesive Fatigue Qualification tests will determine if the air bag concept is to become the primary jigging kit, at which time it will be redesigned for production use.

The second universal pocket field jigging kit, a bungee cord concept, 6405-15011, is shown in Figure 29. The bungee cords wrap around the spar and pocket and are restrained by means of hooks at the trailing edge. Pressure is applied to the skin-to-spar and skin-to-rib areas by means of square, hollow aluminum tubes inserted beneath the bungee cords. During tool tryout, it was determined that if the tubes were spaced as shown in Figure 30, the skin would act as a caul plate and distribute sufficient pressure over the skin-to-rib area to obtain a good bond between the rib flanges and the pocket skins. A trailing edge channel is used to insure pocket alignment and is used as the base for the cables holding the square, hollow aluminum tubes in the correct spacing. One end of each bungee cord is permanently fastened to this channel. By this means, all the components are assembled into one complete tool. This design lends itself to the connecting of additional tubes for the bonding of multiple adjacent pockets. The complete tool shown in Figure 31 weighs 5.1 pounds.

Both field jigging kits were used to bond universal pockets to CH-54B blade fatigue specimens with good results. However, the air bag fixture

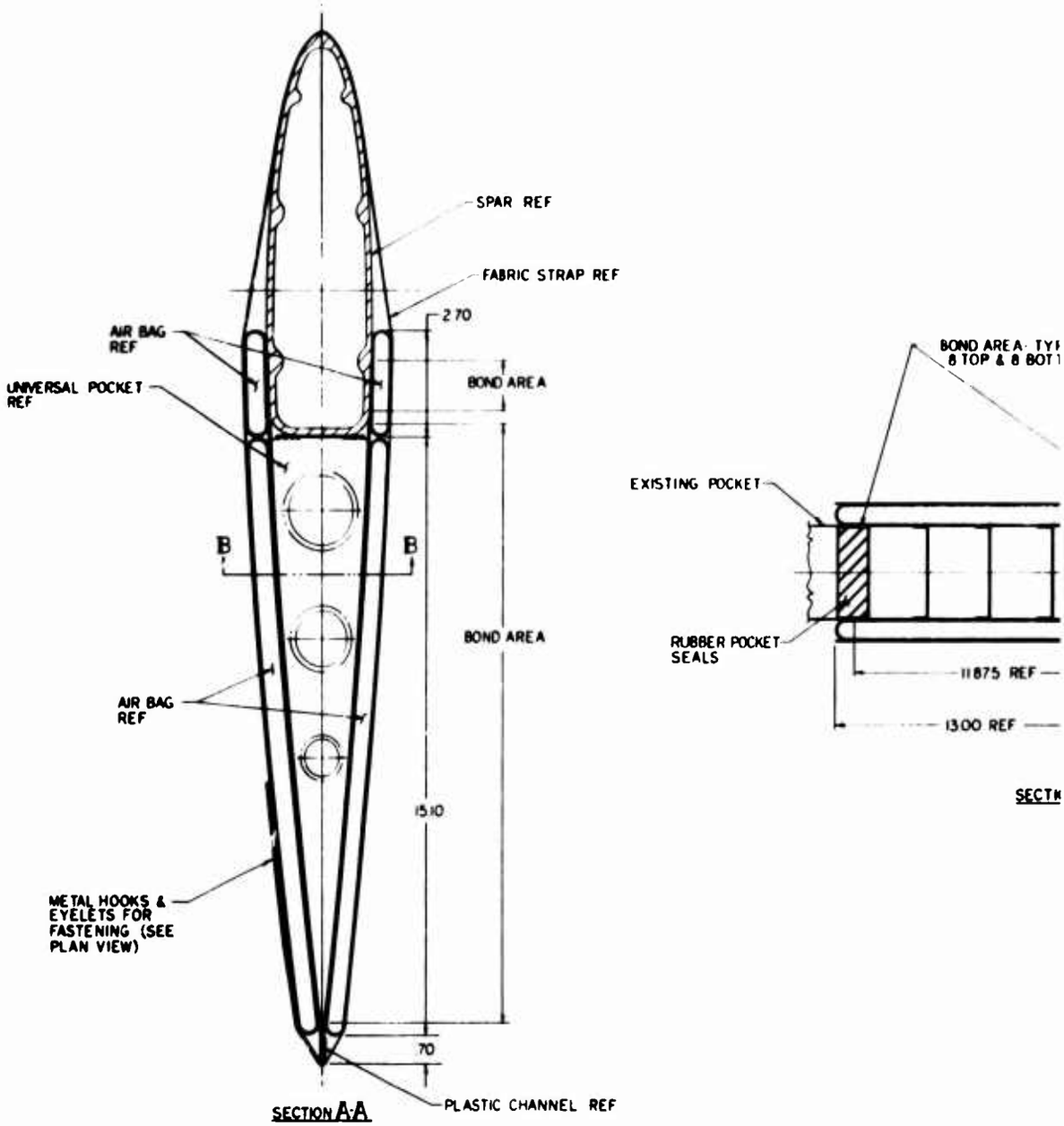

Figure 27. Air Bag Concept.

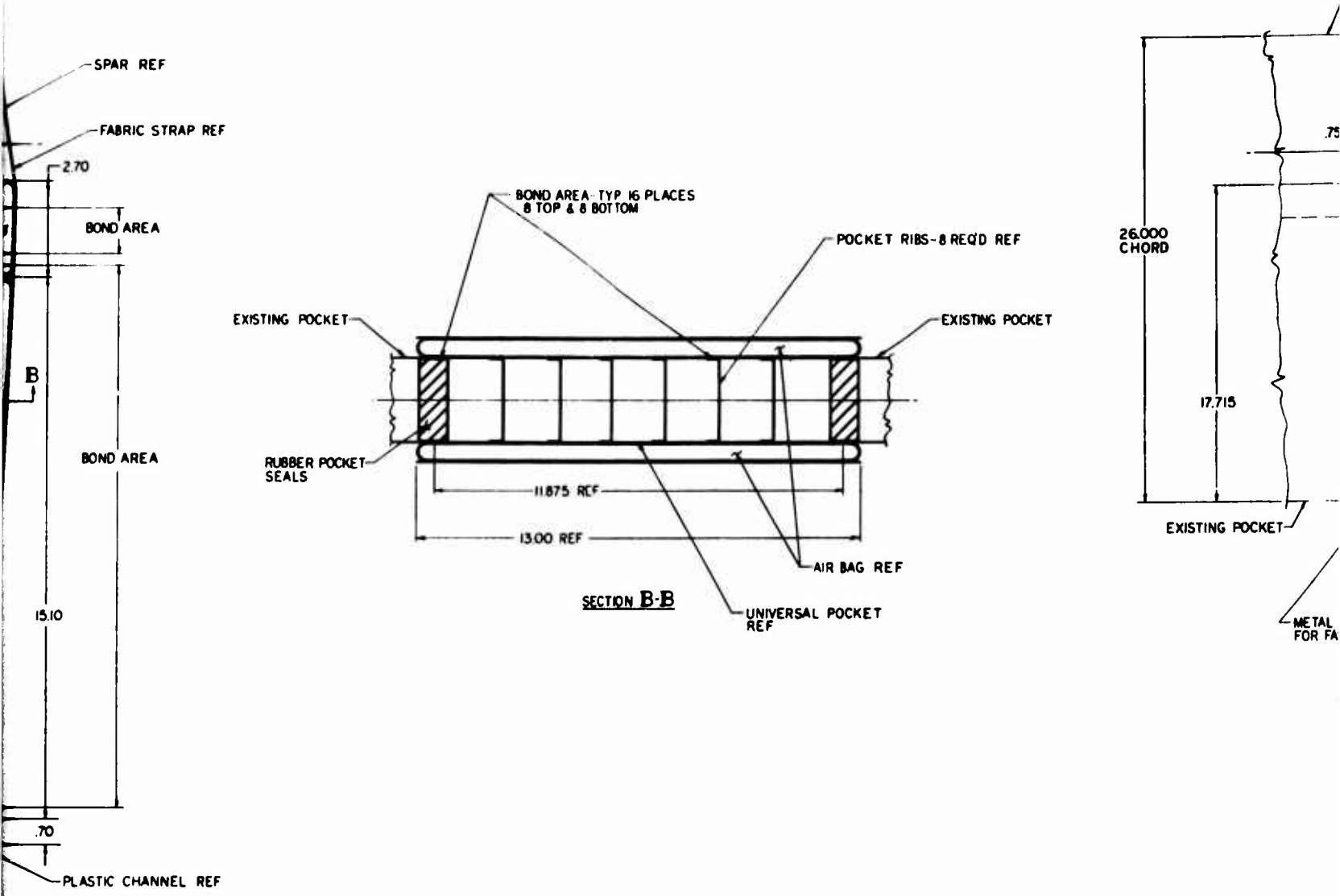

gure 27. Air Bag Concept.

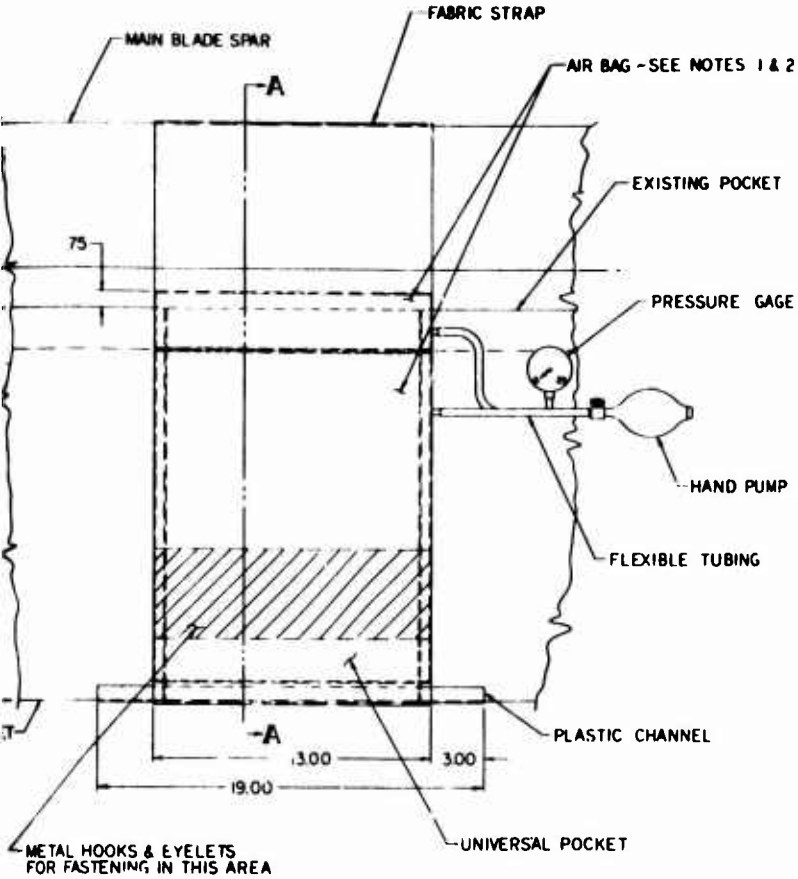

AIR BAG INSTALLATION PLAN VIEW

NOTES

1. AIR BAG PRESSURE CAVITIES MUST BE CAPABLE OF HOLDING 10 P.S.I. PRESSURE FOR A MINIMUM OF 24 HOURS.
2. AREAS OF AIR BAG THAT COME IN CONTACT WITH BLADE ARE TO BE COATED WITH A SUITABLE MOLD RELEASE COMPOUND.

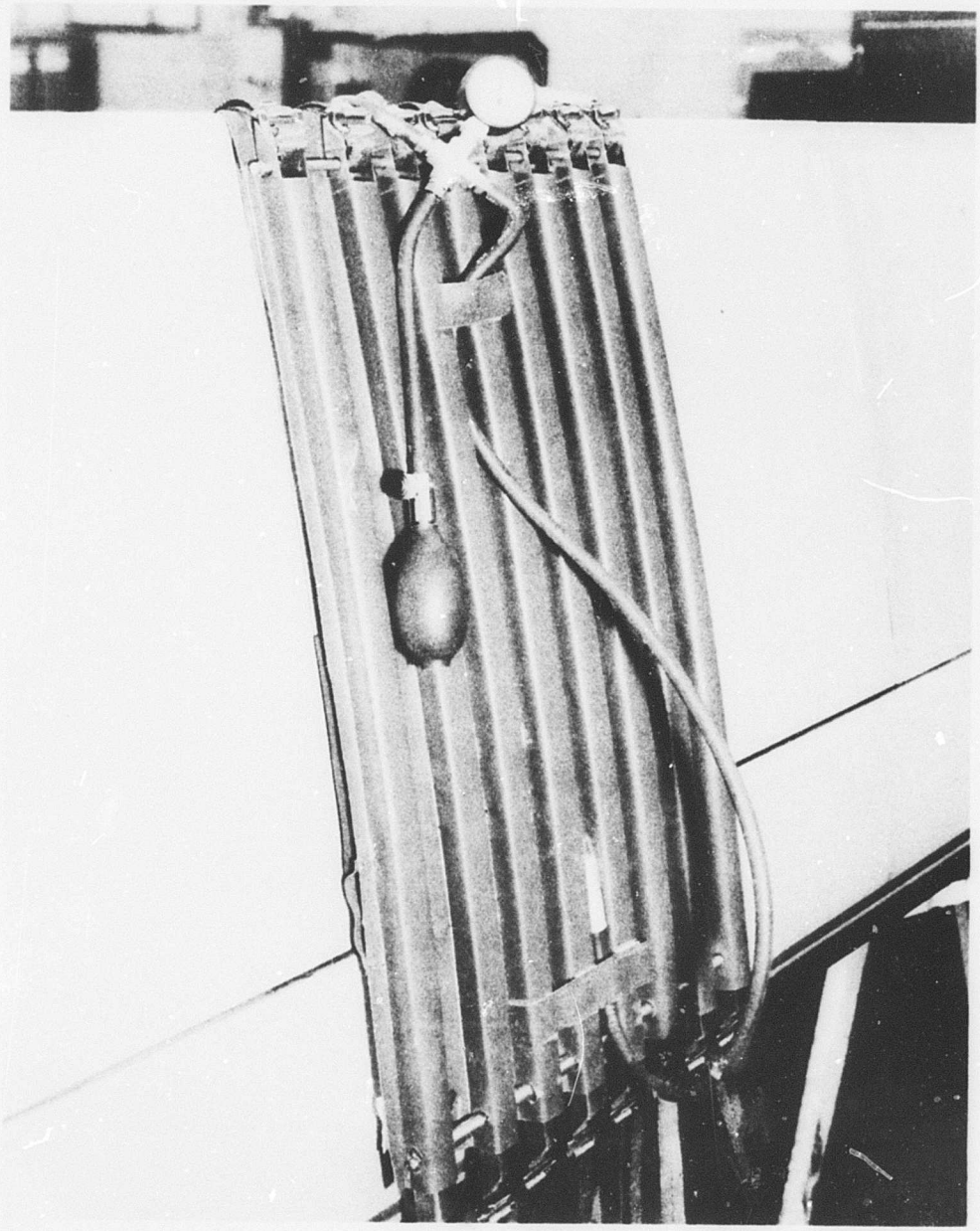

Figure 28. Air Bag Field Jigging Kit in Position.

Preceding page blank

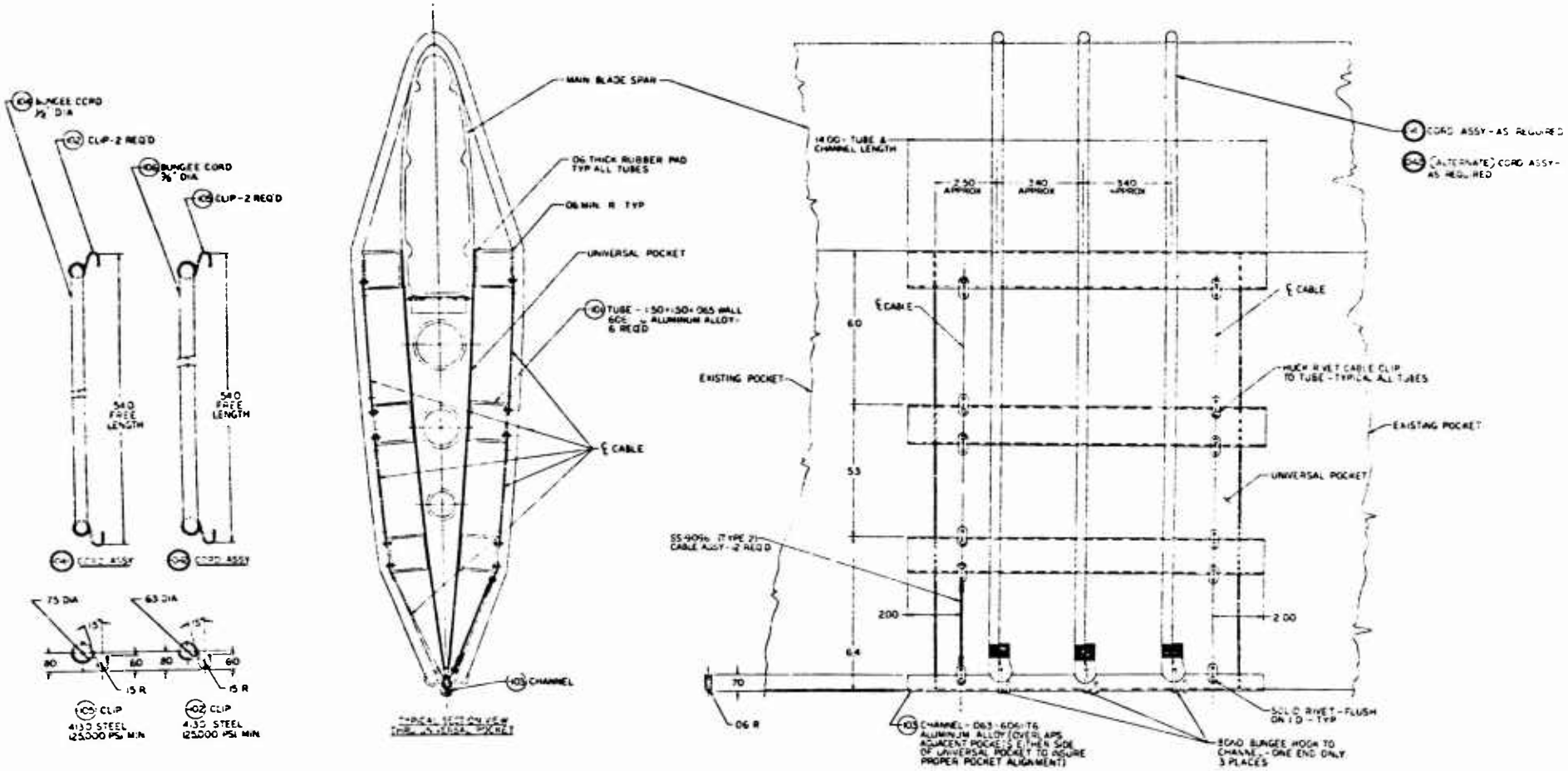

Figure 29. Bungee-Cord Concept 6405-15011.

Preceding page blank

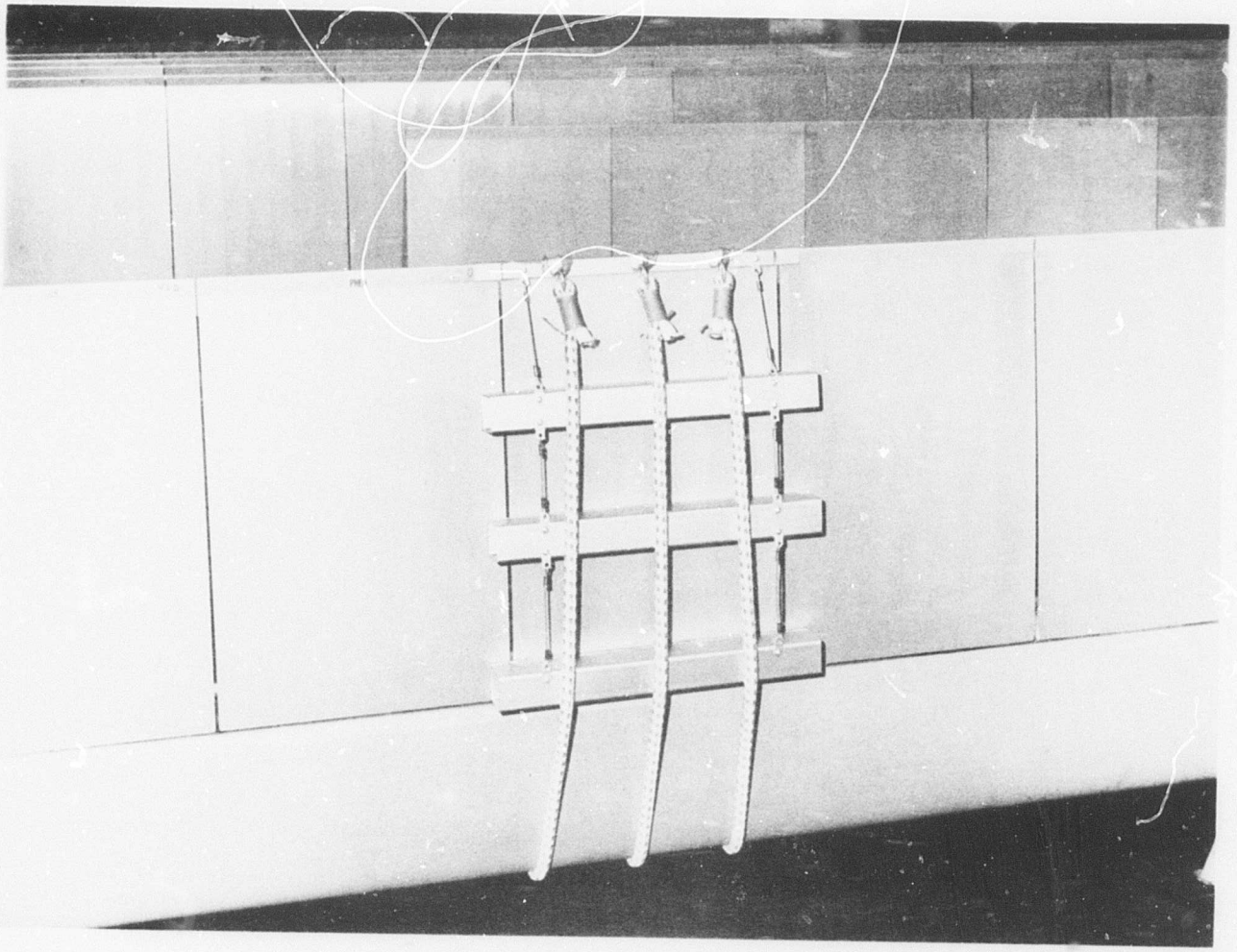

Figure 30. Bungee-Cord Field Jigging Kit in Position.

Preceding page blank

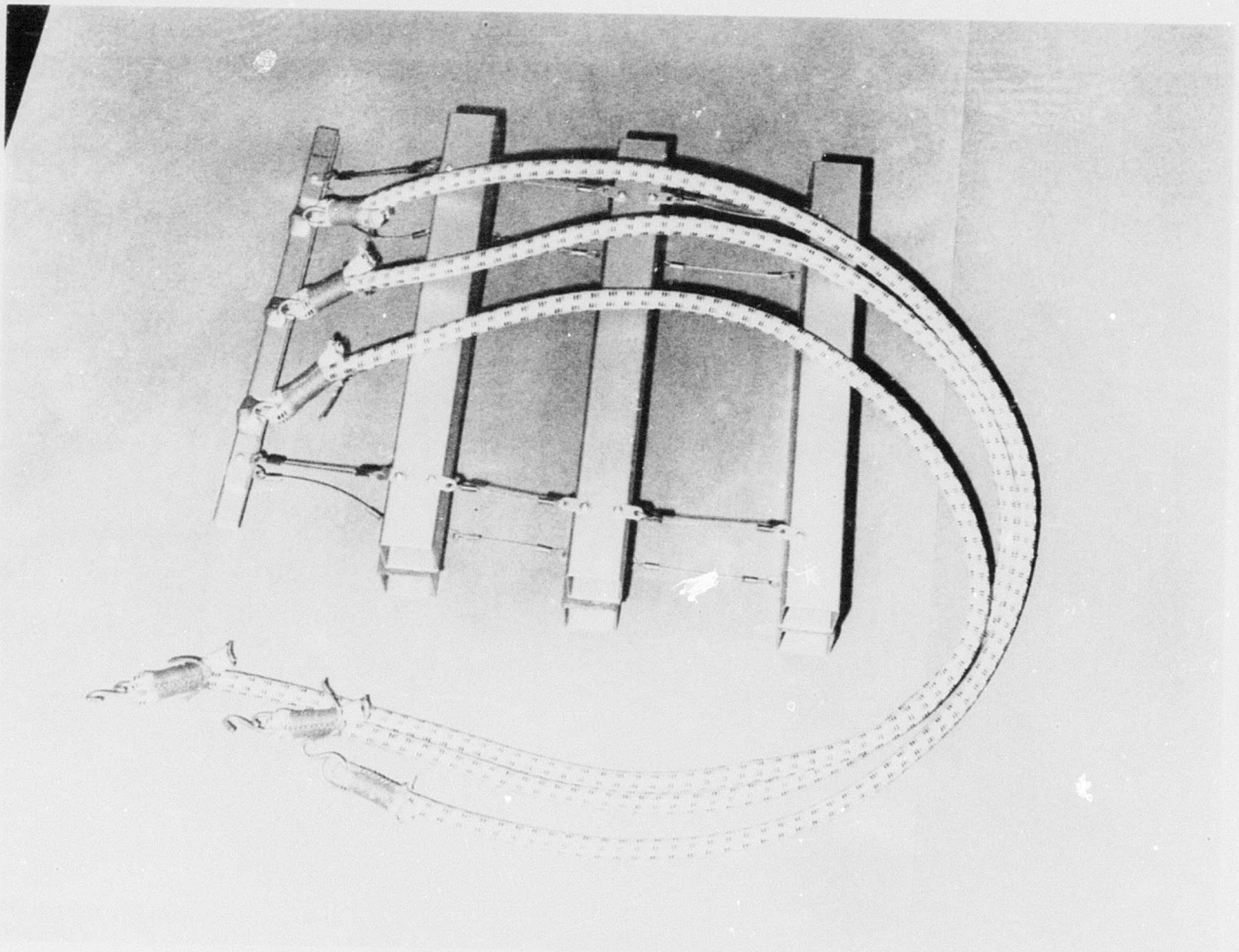

Figure 31. Field Jigging Kit 6405-15011.

allowed the pockets to tilt or shift position, and this was not discernible until the fixture was removed after the cure. In addition, several pockets bonded with the air bag fixture had edge voids, but these edge voids were not in a position to affect the fatigue test, nor did they progress during the fatigue test. After fatigue testing, pockets were removed by tear-down and the bonds examined. The skin-to-rib bond failed by delaminating the phenolic shim between the rib flange and pocket skin. The glue line in this bond from the bungee cord fixture was thicker, but this was not detrimental; no separation occurred from fatigue testing. No differences could be determined in the pocket-to-spar bond between either fixture. However, there are reasons to prefer the bungee cord fixture:

1. The bungee fixture is easy to apply, and after it is in place, it can be determined that the replacement pocket is properly spaced and positioned. Once in place, the air bag fixture completely hides the pocket.

2. Excess adhesive squeeze-out can be easily removed and cleaned, while still soft, when using the bungee fixture. With the air bag, the excess adhesive hardens in ridges and is difficult to remove. The ridges of adhesive along the leading edge of the pocket interfere with contour and airflow.

3. The bungee fixture is less costly to fabricate, could be repaired in the field if damaged, and weighs only 5.1 lb. The air bag is heavy, and complicated in design. Its rubber tubes, air pump and fittings may be removed and used by other personnel. If damaged, they would be difficult to repair or replace.

The advantages noted above are sufficient to warrant the selection of the bungee cord fixture, 6405-15011, to be used by military personnel in the field for pocket replacement.

FATIGUE AND PROOF TESTS

The requirements for the two adhesives selected for this task were that they be ambient temperature curing systems which could be applied in the field and that they be resistant to the effects of temperature, humidity, water and oils, with primary emphasis on SEA environment. The adhesive must be applied over the residue of the original adhesive on the spar, with a minimum of cleaning performed. The pressure on the bond line during bonding could vary between contact (1 to 2 psi) and 10 to 30 psi. The adhesive must be capable of a lap shear strength of 1,000 psi over the temperature range of -67° F to +180° F, and a "T" peel strength of 10 PIW (pounds, inch, width) over the same temperature range is desired. In addition, the adhesive should have approximately 1,000 psi shear strength after 12 hours of curing at +75° F.

POCKET PROOF LOAD TEST

Three proof load specimens, similar to that shown in Figure 19, were fabricated with each of the two candidate adhesives. Each specimen was composed of a universal pocket, 6405-15006, bonded with two 6405-15007 -103 spacers to a CH-54B blade spar section. The blade spar section was prepared for bonding by processing through the chromic acid anodize line, oven drying and priming with the production nitrite-phenolic adhesive. A regular production pocket was then bonded to the spar in a production fixture using the production nitrite-phenolic adhesive at 350° F and 100 psi for 1 hour. This pocket represented the field-damaged pocket and was removed by peeling it from the spar, as shown in Figure 32. This left the spar coated with the residual adhesive. This residual adhesive was lightly sanded with #80 grit paper (Figure 33) and wiped clean with a cheesecloth pad dampened with methyl-ethyl-ketone (Figure 34). The methyl-ethyl-ketone was also used to wipe clean the pocket skin and ribs (Figure 35). Approximately .25 pound of the candidate adhesive was mixed and then used to bond each pocket to a spar section. The adhesive was first applied to the rib and skin areas of the pocket (Figure 36) and then to the spar and spacers (Figure 37 and 38). The spacers were located on the spar, the pocket was positioned on the spar, and spacers and the field jigging fixture were applied to the pocket spar assembly. Curing was accomplished in the bonding room at 72°-75°F and a relative humidity of 48-52%. The cured proof load specimen was placed in the support assembly test fixture which grips the spar on either side of the pocket and supports the specimen in the test machine. The "whiffletree" loading fixture was positioned on the upper surface of the pocket as shown in Figure 17. The "whiffletree" distributes the test machine applied load over the surface of the pocket in accordance with the distribution of loads calculated for the pocket in Figure 15. A dial indicator is placed to read the deflection of the pocket at the trailing edge under the applied loads.

Figure 18 is a photograph of the complete test setup.

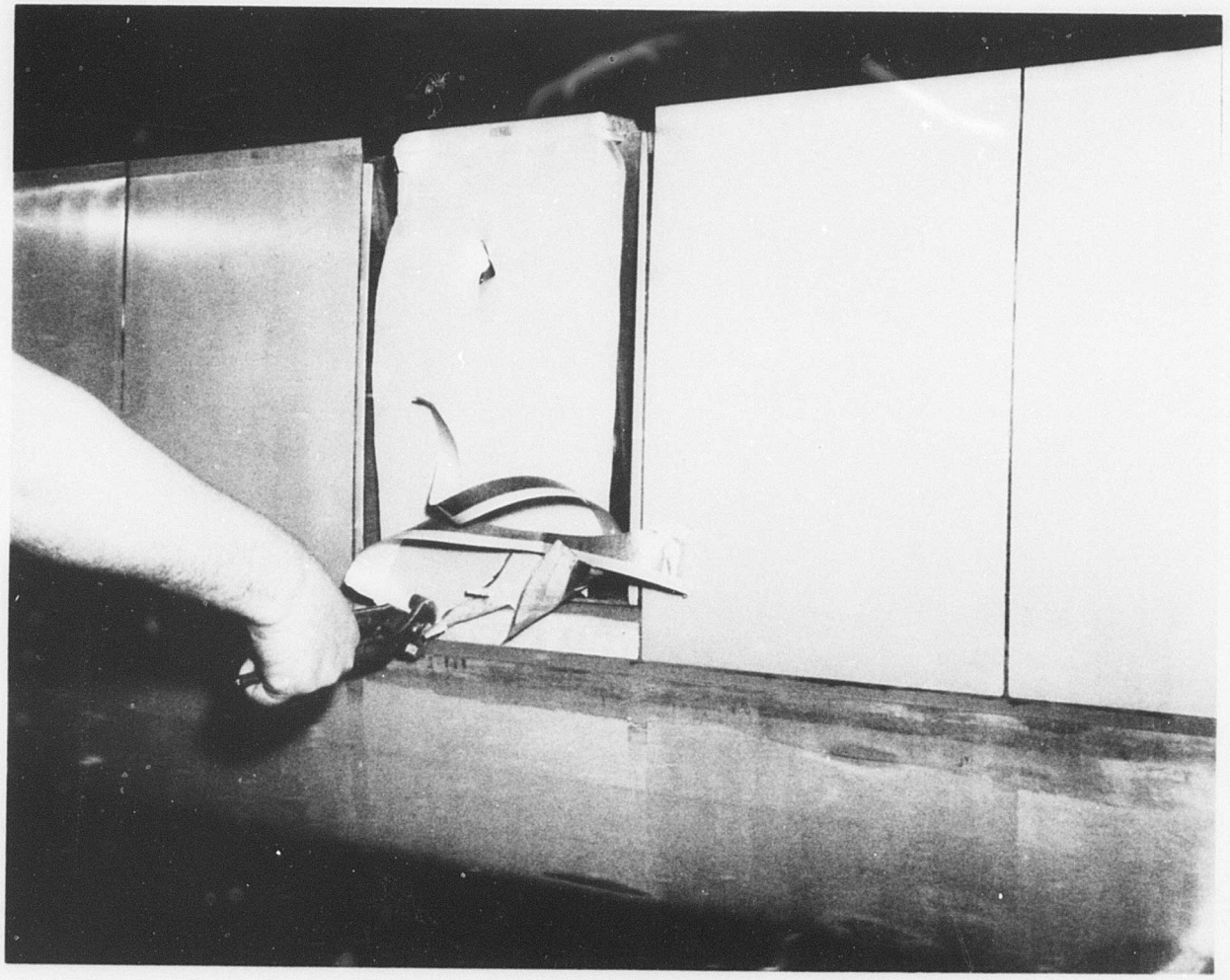

Figure 32. Removing a Damaged Pocket.

Figure 33. Sanding Residual Adhesive.

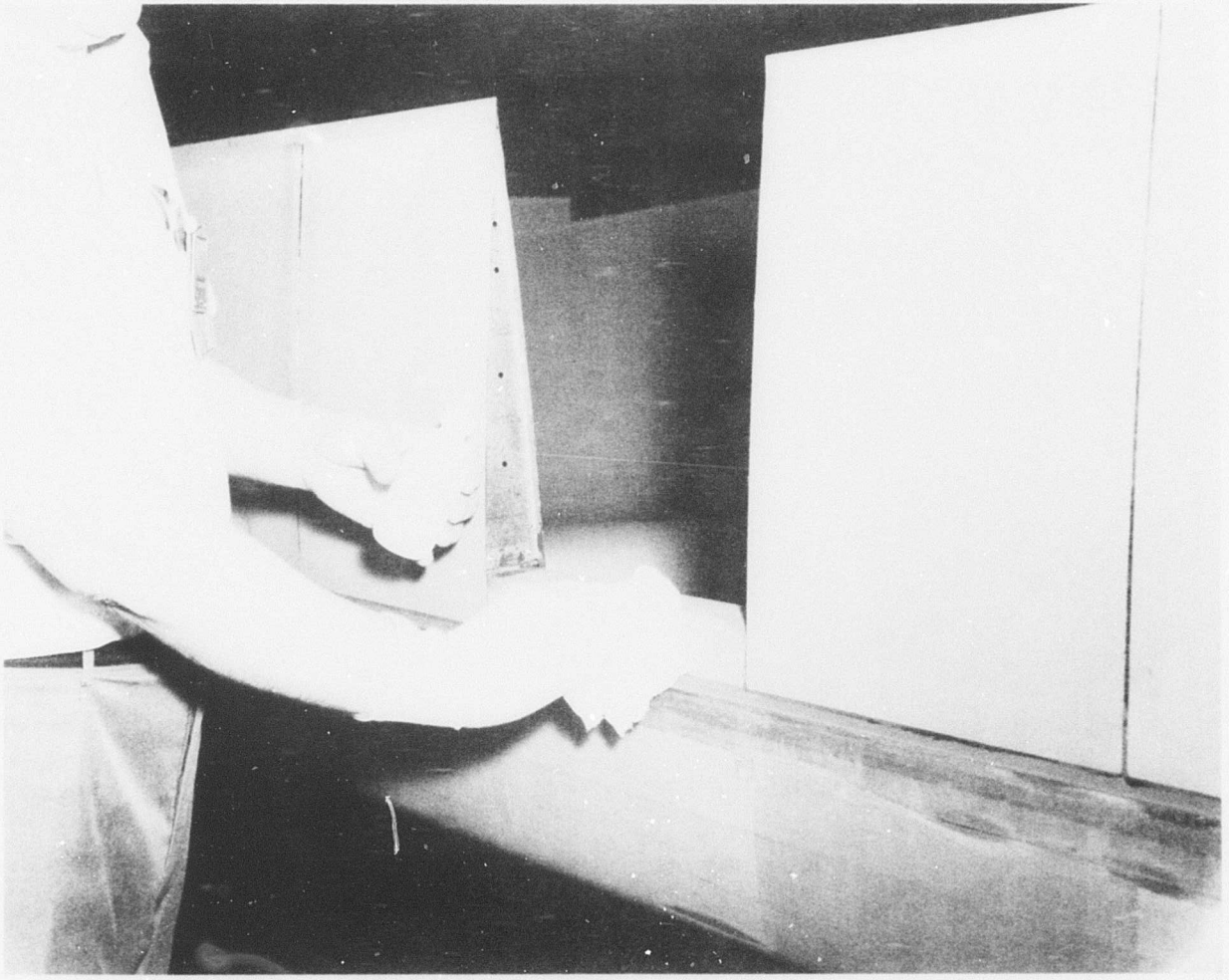

Figure 34. Cleaning Residual Adhesive.

Figure 35. Cleaning Universal Pocket.

Figure 36. Applying Candidate Adhesive to Universal Pocket.

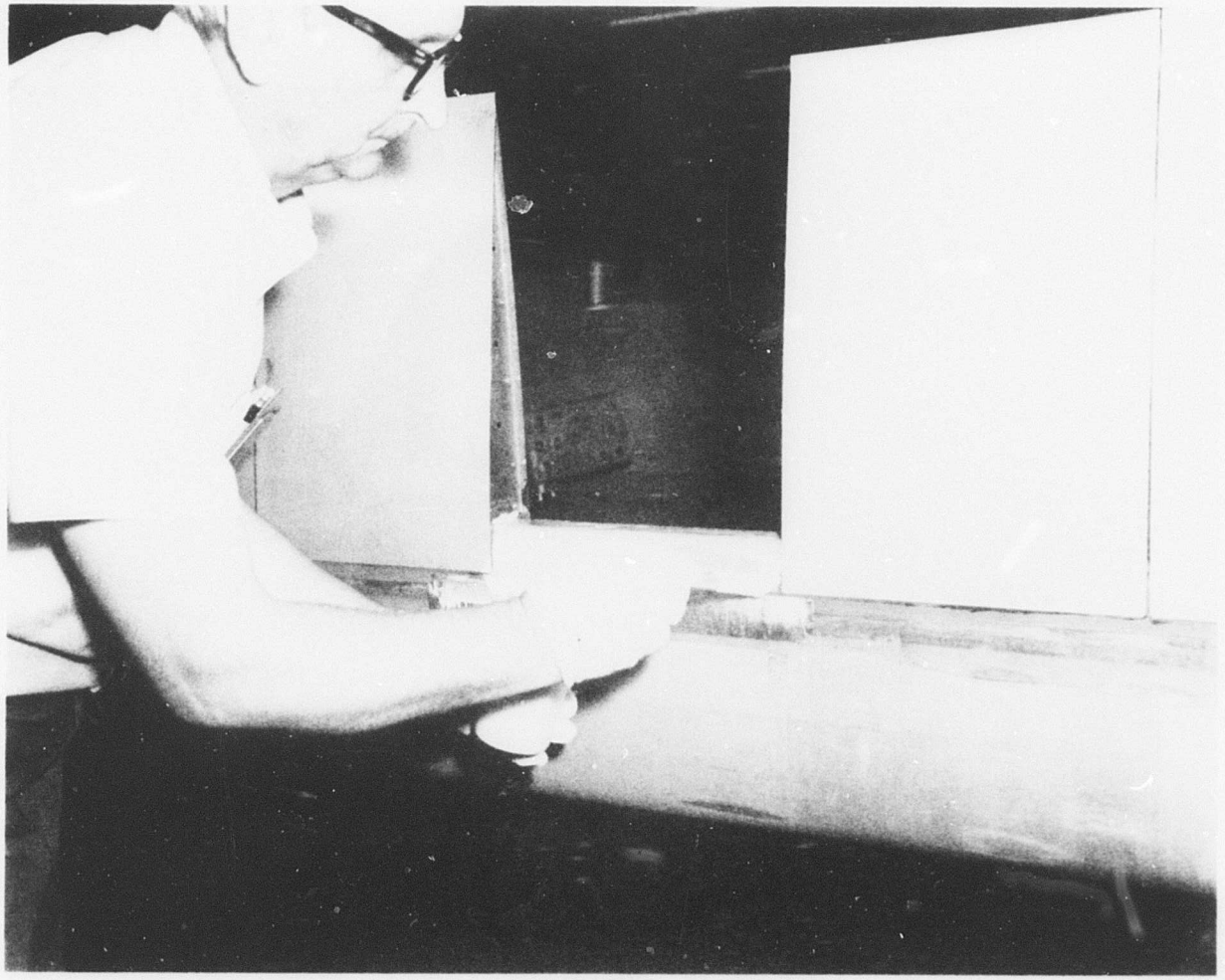

Figure 37. Applying Candidate Adhesive to Spar.

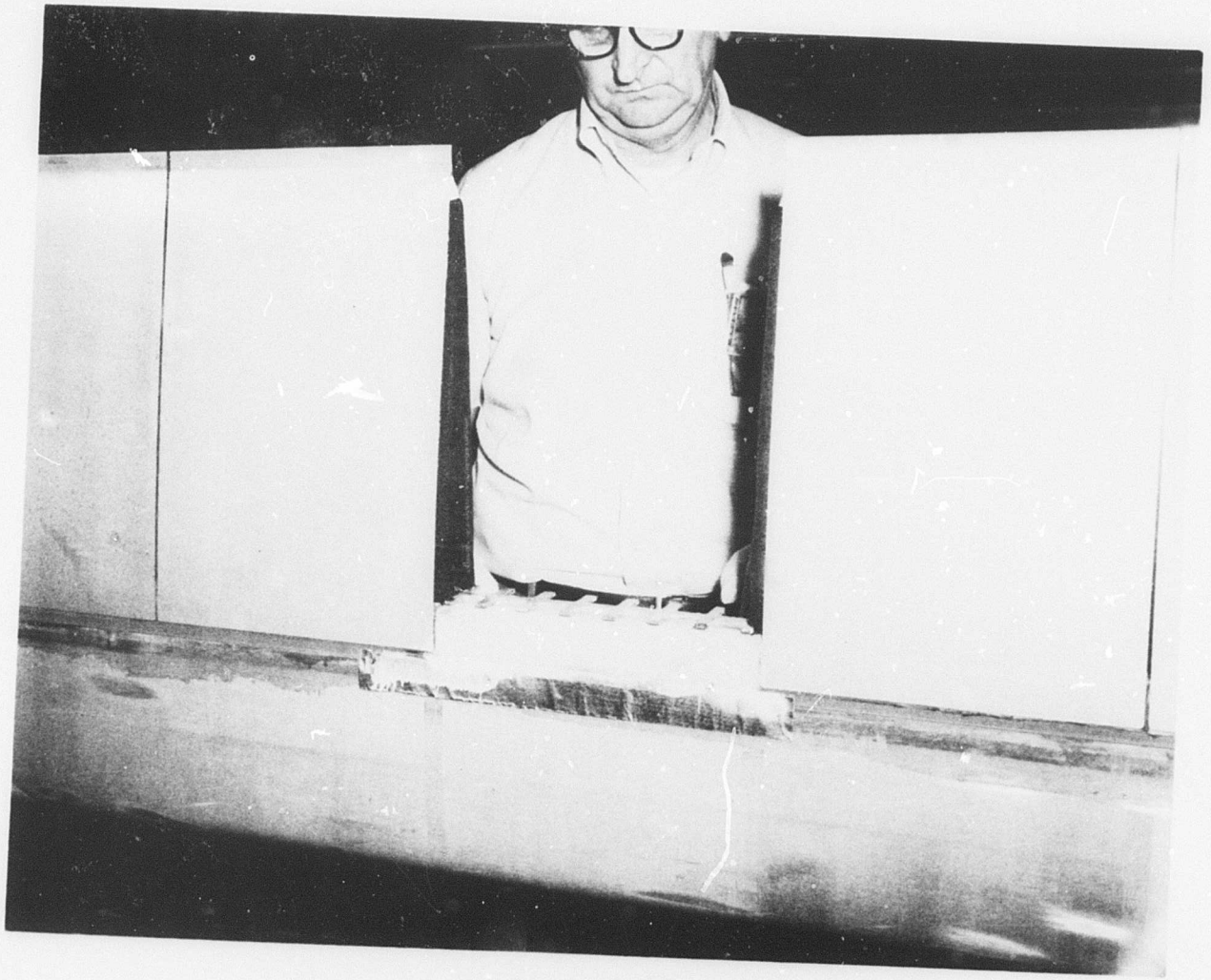

Figure 38. Positioning Adhesive-Coated Spacer.

POCKET PROOF LOAD TEST PROCEDURE AND RESULTS

The pocket specimens were tested at the ambient atmospheric temperature and humidity conditions present in the test laboratory. A compressive load was applied to the pocket in increments of 100 lb, and dial indicator measurements of deflection were made at each load increment. The deflection was noted at the load corresponding to the calculated pocket yield proof load. The load was then released and the pocket examined for visual evidence of damage and distortion (permanent set). Load was then increased to the ultimate proof load, recording deflection at each 100-lb load increment. The pocket was then loaded to failure.

All six universal pockets sustained loads well in excess of the required ultimate proof load of 565 lb for blade position pocket number 2, and all universal pockets tested exceeded the failing load of the minimum strength production adhesive pocket tested. The failure loads for each of the pockets tested are tabulated in Table V and compared with the number 2 production pocket. The deflections measured at the trailing edge of these pockets are shown in Figures 39 and 40 and are compared to the test results of the production pockets.

Deflections of the candidate 1 adhesive pockets, shown in Figure 39, show little scatter and are close to the production pockets, whereas pockets bonded with candidate 3 adhesive show more scatter and more deflection than the production pockets; see Figure 40. In this test, candidate 1 is considered the better adhesive.

FATIGUE TEST PROCEDURE AND RESULTS

One five-pocket main blade fatigue specimen was fabricated with each of the two candidate adhesives. The fatigue testing was performed on S-61 blade sections as shown in Figures 41 and 42.

All pockets used were production S-61 model pockets, fabricated in production tools with production nitrite-phenolic primers and adhesives and inspected by Quality Control personnel to production requirements. The S-61 spar sections were processed through the chromic acid anodize line, oven dried, and primed with a production nitrite-phenolic primer. Five production pockets were then bonded to the spar with a nitrite-phenolic adhesive at 350°F for 1 hour with 100 psi pressure. See Figure 43. All operations were monitored by Quality Control personnel and inspected per production requirements. The center pocket remained on the spar, as a control for the fatigue testing. The two pockets on either side of the center pocket were removed by peeling from the spar as shown in Figure 32; the residual adhesive remaining on the spar after teardown was sanded with #80 grit paper and wiped clean with methyl-ethyl-ketone

TABLE V. UNIVERSAL POCKETS - PROOF LOAD TEST RESULTS (LB)

Adhesive Used For Pocket-to-Spar Bond	Test #1	Test #2	Test #3
Candidate 1	1725	1675	1835
Candidate 3	1735	1880	1730
Production Adhesive	1725	1460	

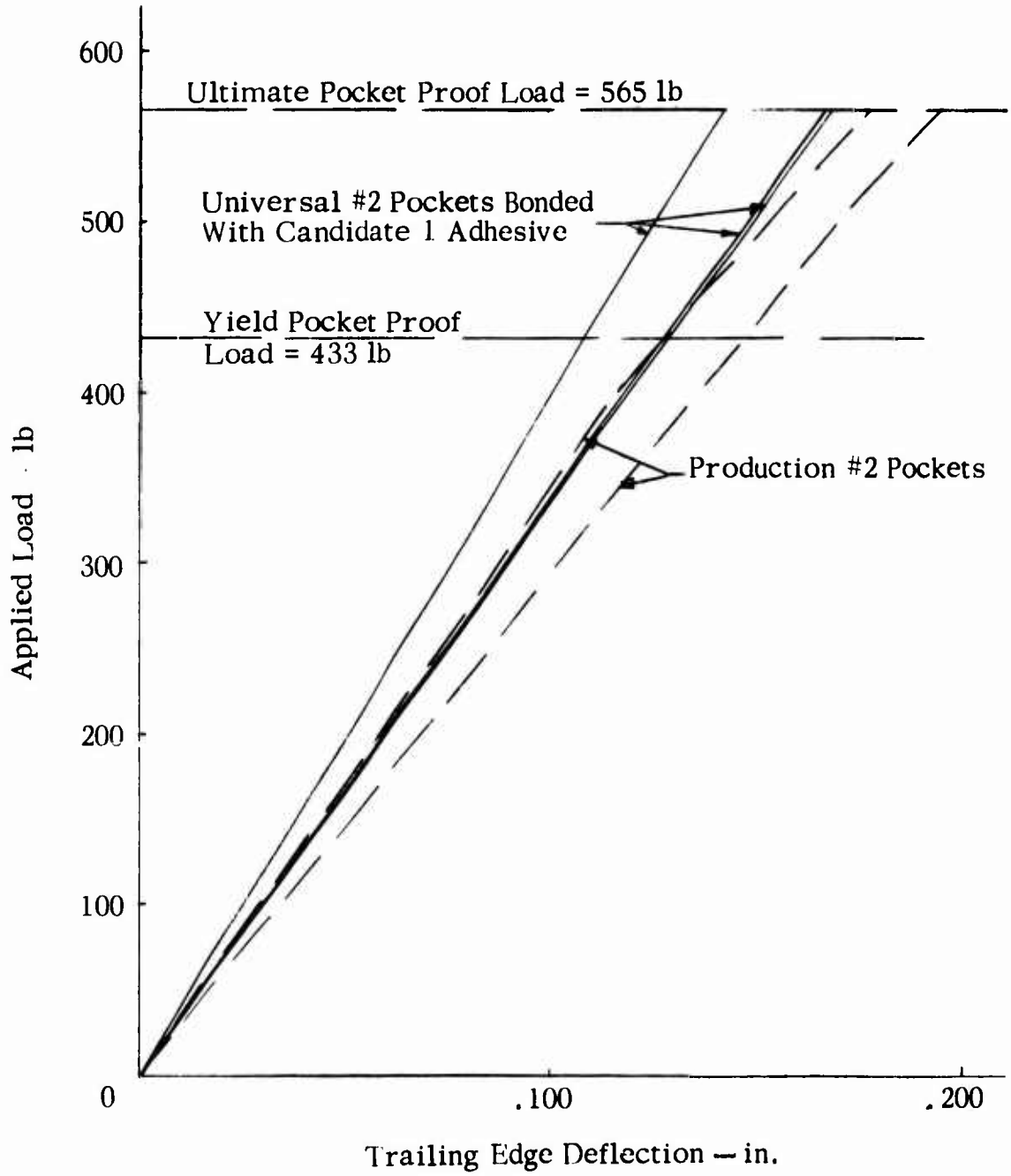

Figure 39. Pocket Trailing Edge Deflection Vs. Applied Load Using Candidate 1 Adhesive.

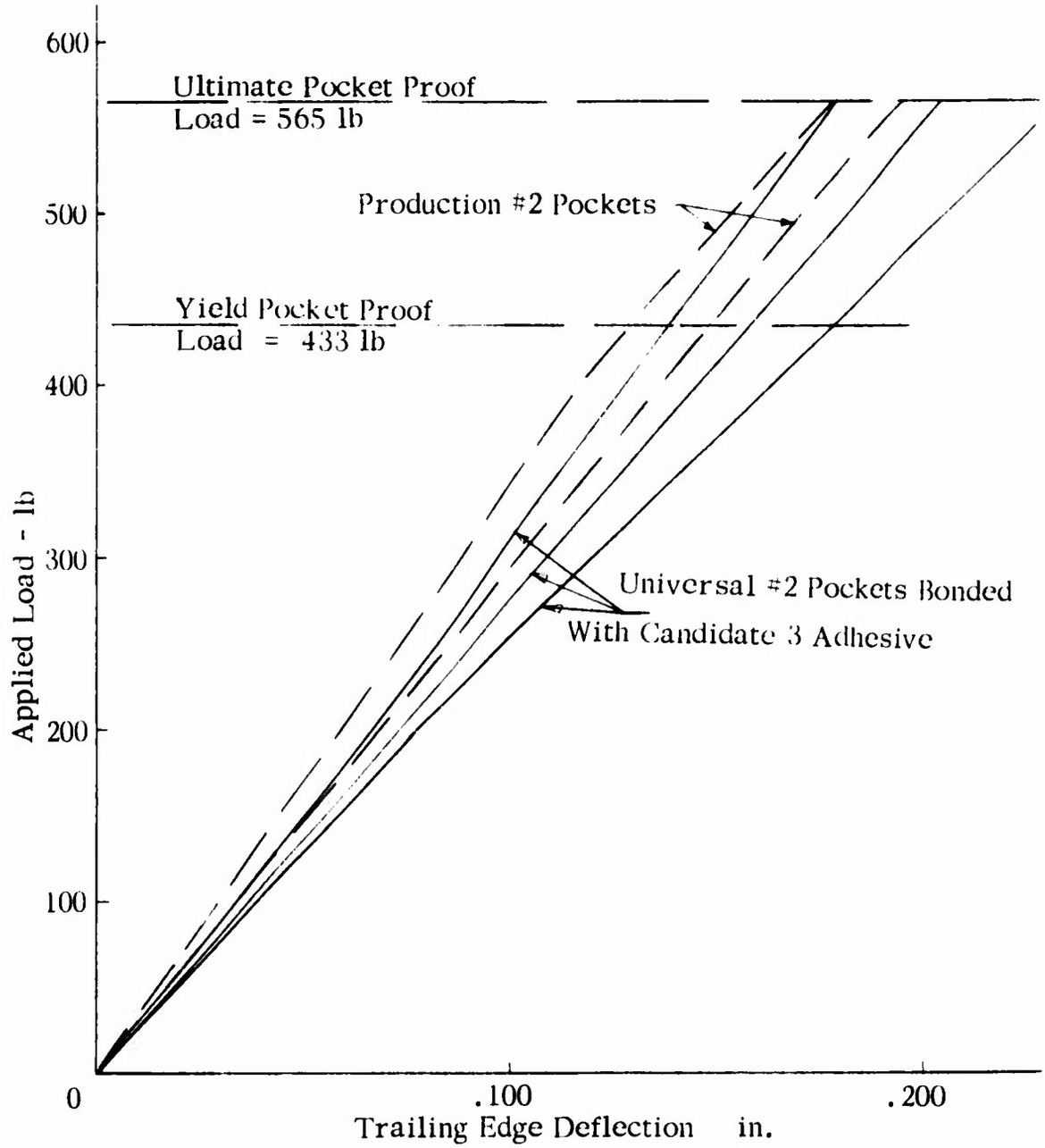

Figure 40. Pocket Trailing Edge Deflection **Vs.** Applied Load Using Candidate 3 Adhesive.

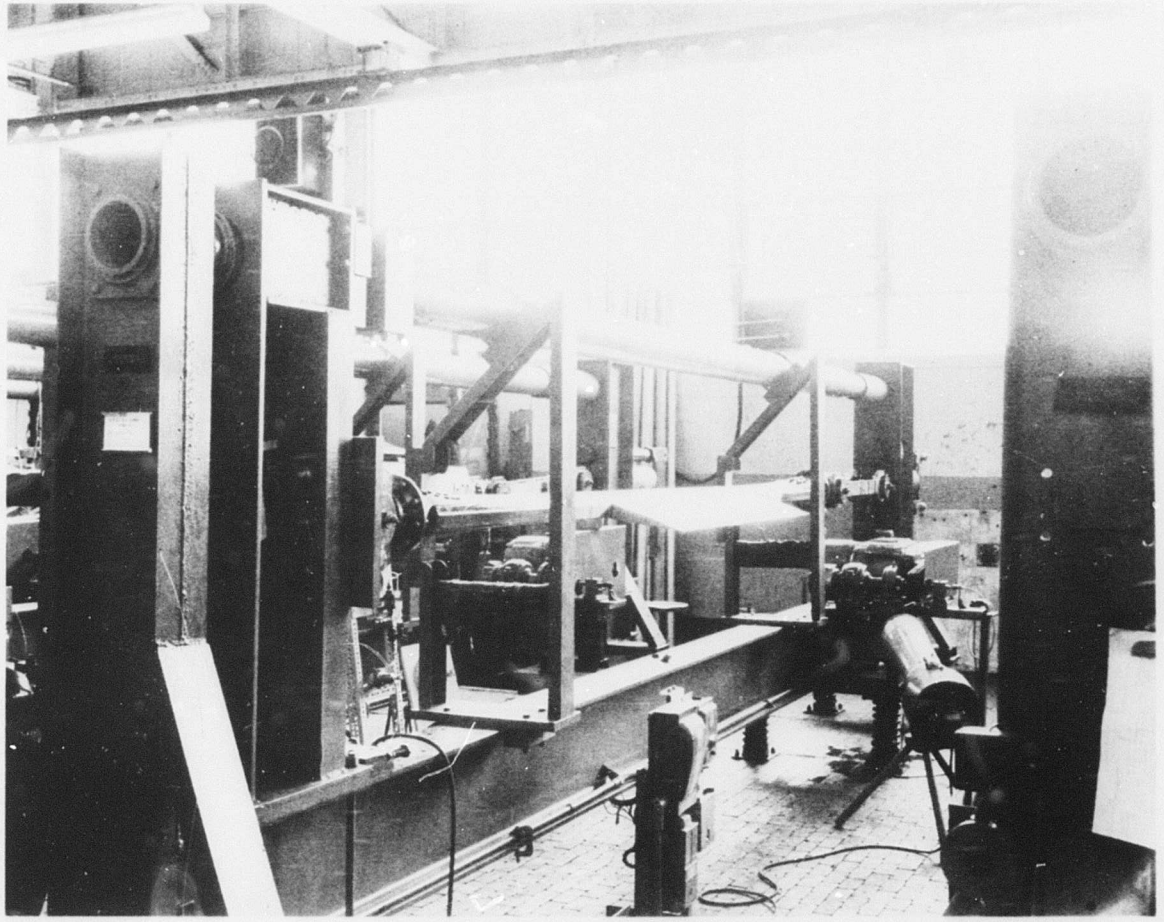

Figure 41. Sikorsky 40,000-Lb Blade Fatigue Test Machine With S-61 Fatigue Specimen.

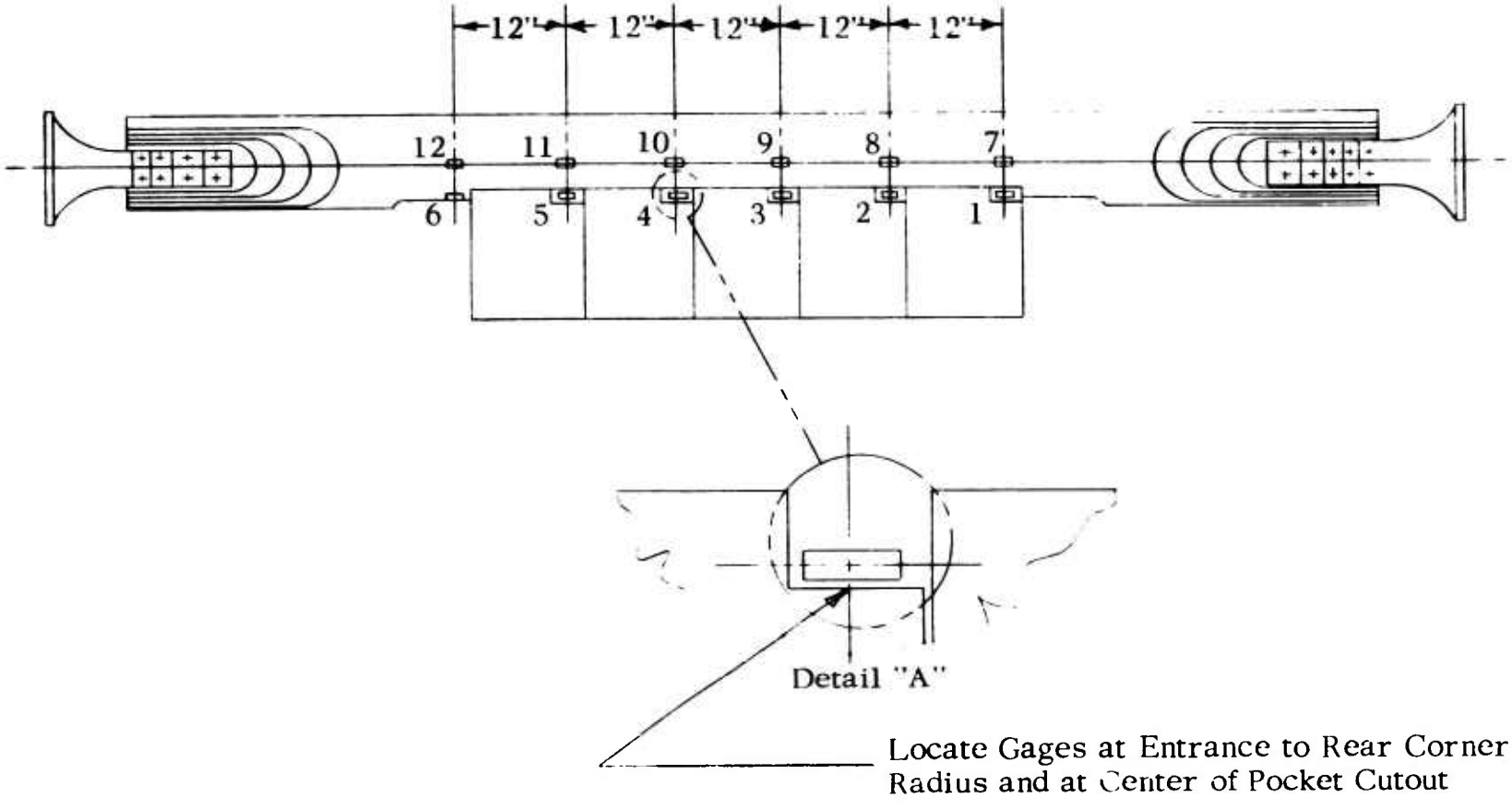

Figure 42. Main Rotor Blade Pocket-to-Spar Bond Fatigue Test Specimen.

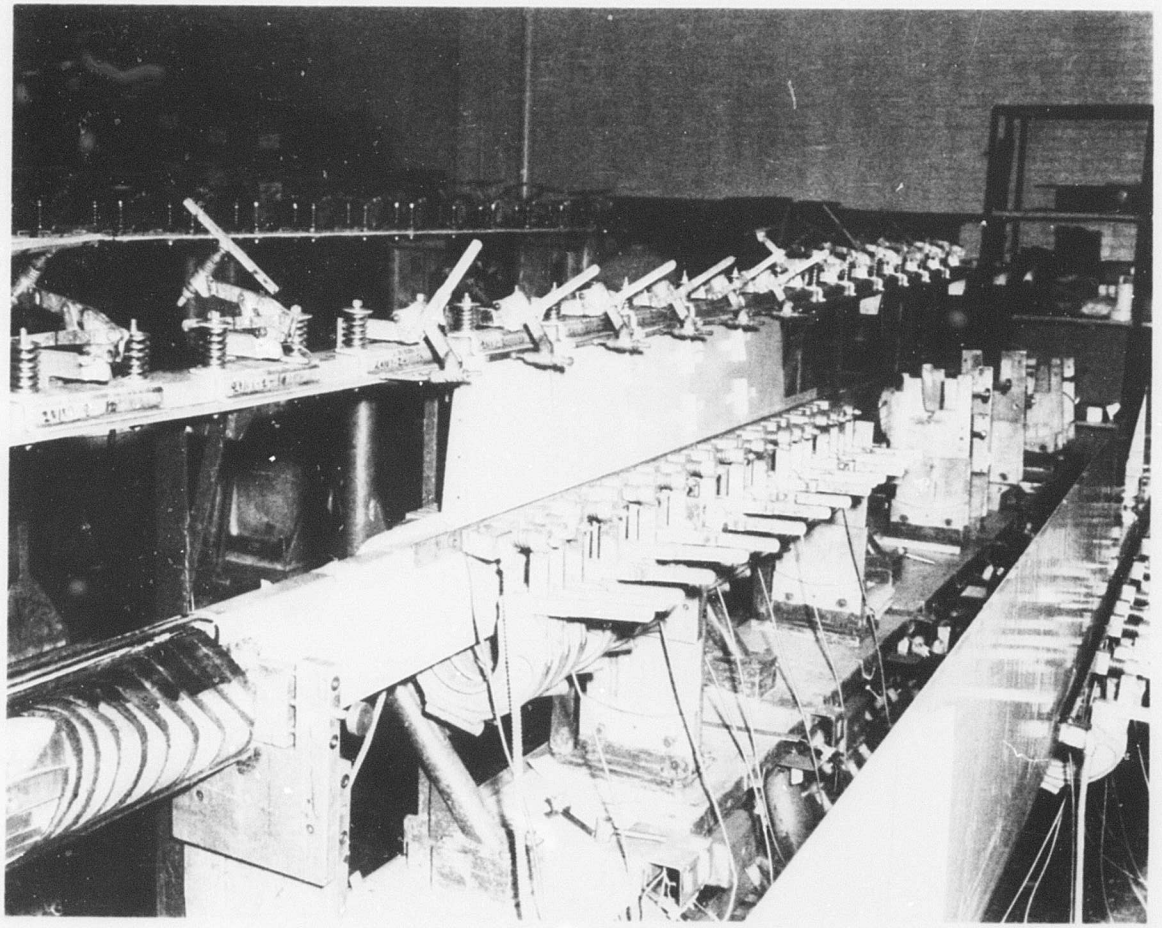

Figure 43. Bonding of Production Pockets to Fatigue Specimen per Production Procedures.

as shown in Figures 33 and 34. The bond area of the pockets was also cleaned with methyl-ethyl-ketone immediately prior to the application of the adhesive. The candidate adhesive was mixed per the required ratio and applied to the spar and pockets. The specimen was assembled in a production fixture with production tools, modified to produce 5 psi pressure on two pockets on the one side of the center pocket and 2 psi on the two pockets on the opposite side of the center pocket. The assembly was cured in the bonding room at 73°F and 46% RH for 20-24 hours. All operations were monitored by Quality Control personnel.

The fatigue specimens were tested at the ambient atmospheric temperature and humidity conditions present in the test laboratory. Initially, an S-61 blade fatigue specimen was instrumented as shown in Figure 42 and the strain gages were physically calibrated by means of dead weights. This instrumented blade was then installed in the 40,000-lb blade fatigue test machine and used to establish all test load conditions in terms of specimen deflection. Once the amplitude was recorded at quarter span and midspan of the specimen for each load level, the instrumented blade specimen was removed and the subject bond fatigue blade specimen was then installed in the machine and the centrifugal load was applied. An amplitude stylus was attached securely to the leading edge. The specimen was run at the amplitude established by the instrumented blade for each load level. Each specimen was step tested under combined flatwise and edgewise loads representative of those encountered in flight for a minimum of 3×10^6 cycles at each load level. The step testing vibratory load levels were 4,000, 7,000 and 10,000 psi. (These stresses were measured at the pocket-to-spar attachment area; see detail A of Figure 42 on the instrumented specimen.) The first two vibratory load levels are realistic CH-54B flight loads. The first 4,000 psi represents cruise loads. The second 7,000 psi represents maximum high-speed flight loads. These levels are the highest vibratory stress on the CH-54 blade spar measured at 50-60% blade radius. The highest step loading is the combined loading used to substantiate structural adhesives used on rotor blades; it is approximately double normal flight loads and has been used in the past on adhesive fatigue test to rapidly initiate bond separations. The steady tensile stress will be 10,500 psi for all load levels. This is the highest steady centrifugal stress on the spar.

Testing began at the lowest load level, and after the specimen had accumulated 0.5×10^6 cycles the machine was shut down and the pocket-to-spar bond area was inspected by Quality Control personnel for evidence of bond separation. This operation was repeated every 0.5×10^6 cycles until the specimen had accumulated 3.0×10^6 cycles. If the bond separation was less than 1 inch (see detail A of Figure 44), the testing was continued at the next higher load level. After completion of the third and highest load level, the specimen was removed from the machine and the

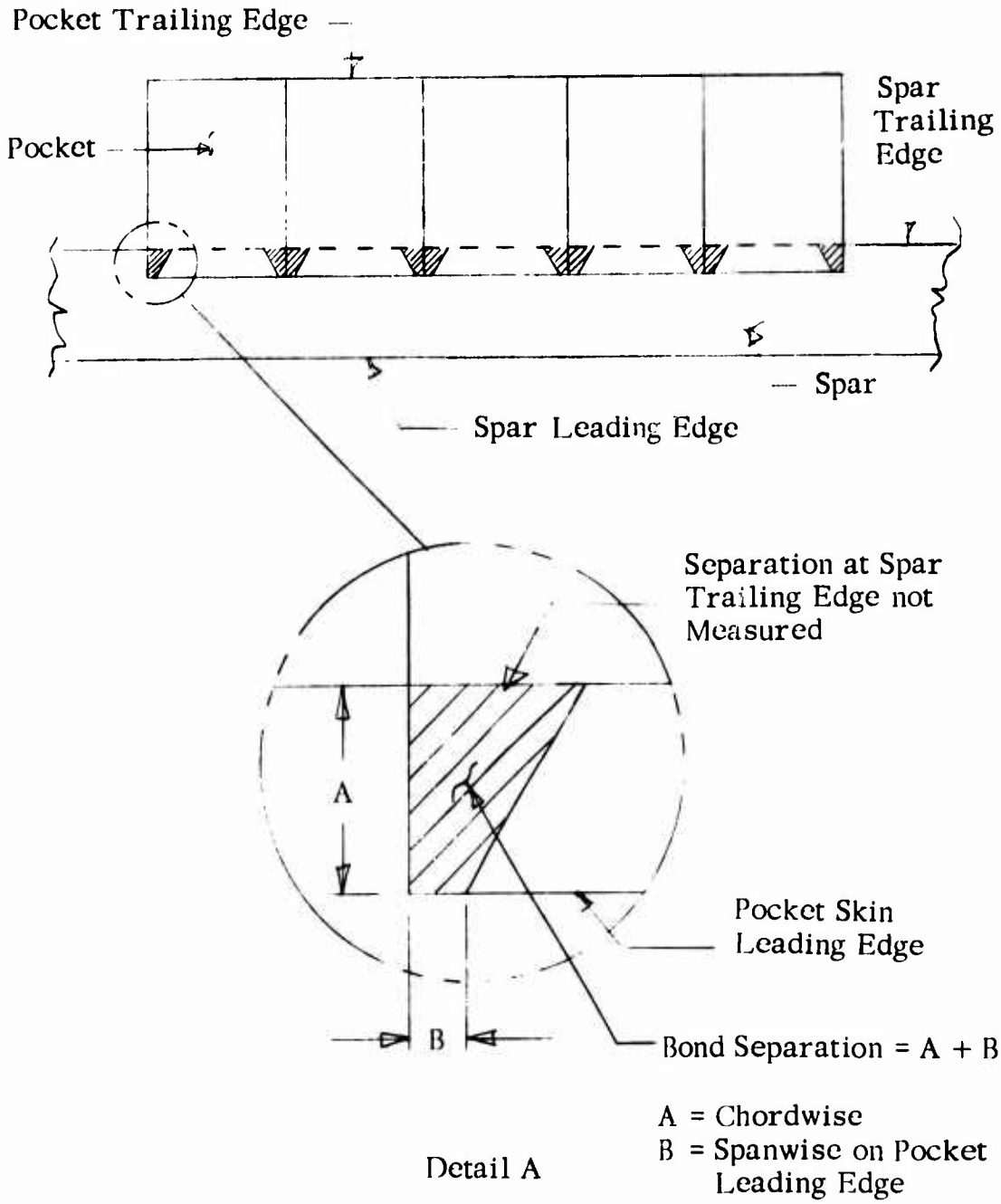

Figure 44. Bond Separation Due to Fatigue.

pockets were removed by teardown and the amount of bond separation, if any, was measured. The bond separation was then plotted; Figure 45 is a typical bond separation/cycle curve used to evaluate adhesives in fatigue. This type of presentation was used to record any bond separations of the selected adhesives.

On the first specimen, the four pockets bonded with candidate 1 adhesive had no separations at teardown. The center control pocket, bonded with the production adhesive, had 1/8-inch-long separations along the leading edge of the pocket at each end (total length = 1 inch); see detail A of Figure 44 and Figure 46. There was no discernible difference in the candidate 1 bond line between pockets bonded at 5 psi and those at 2 psi.

On the second specimen, the four pockets bonded with candidate 2 adhesive had no separations at teardown. The center control pocket bonded with the production adhesive had large separations along the leading edge at each end of the pocket; see Figure 47. There was no discernible difference in the candidate adhesive bond line between pockets bonded at 5 psi and those at 2 psi.

Both candidate adhesives with no bond separations indicate a better resistance to fatigue than the present nitrite-phenolic adhesive used in production.

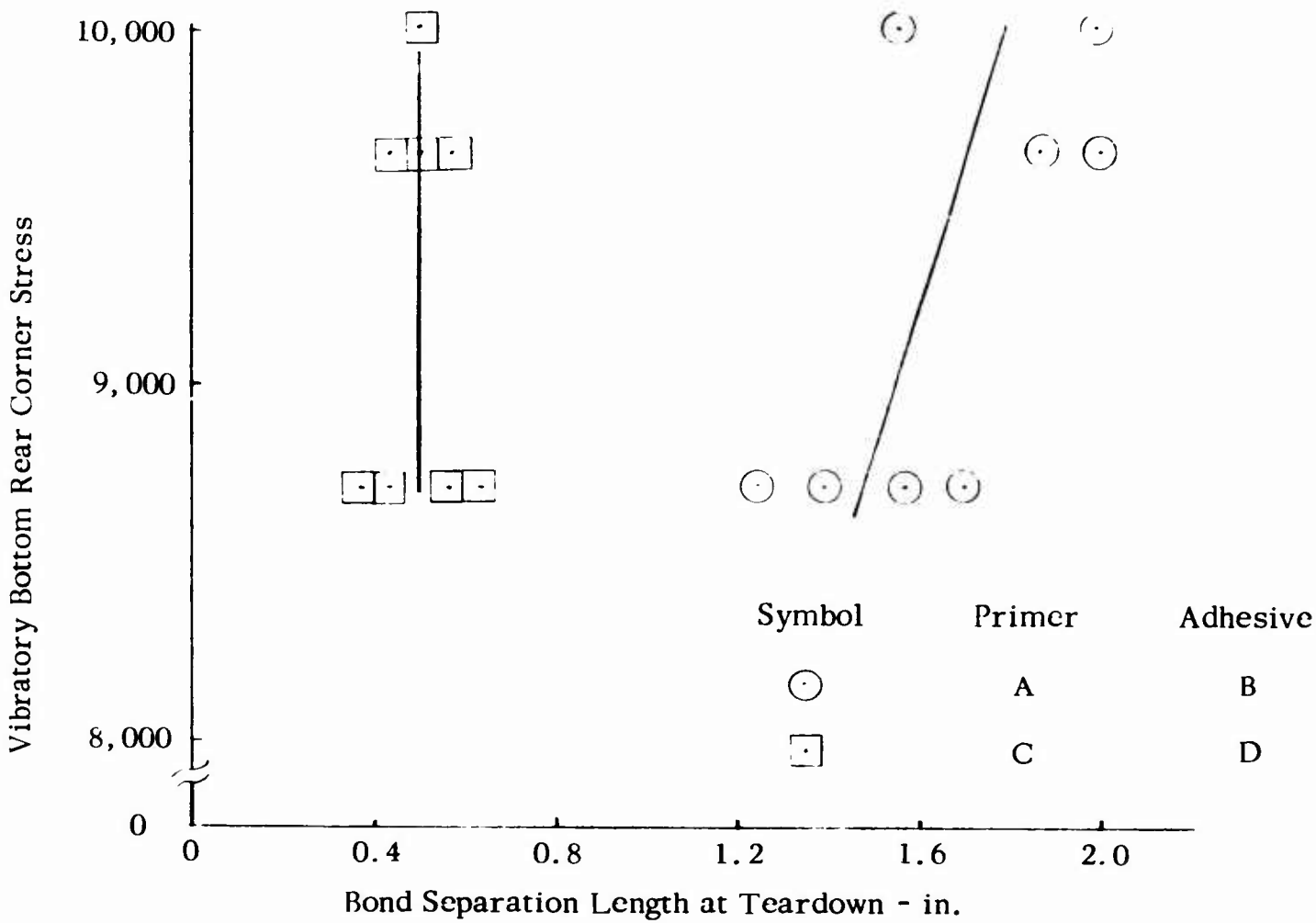

Figure 45. Typical Fatigue Bond Separations at Teardown After 3×10^6 Cycles.

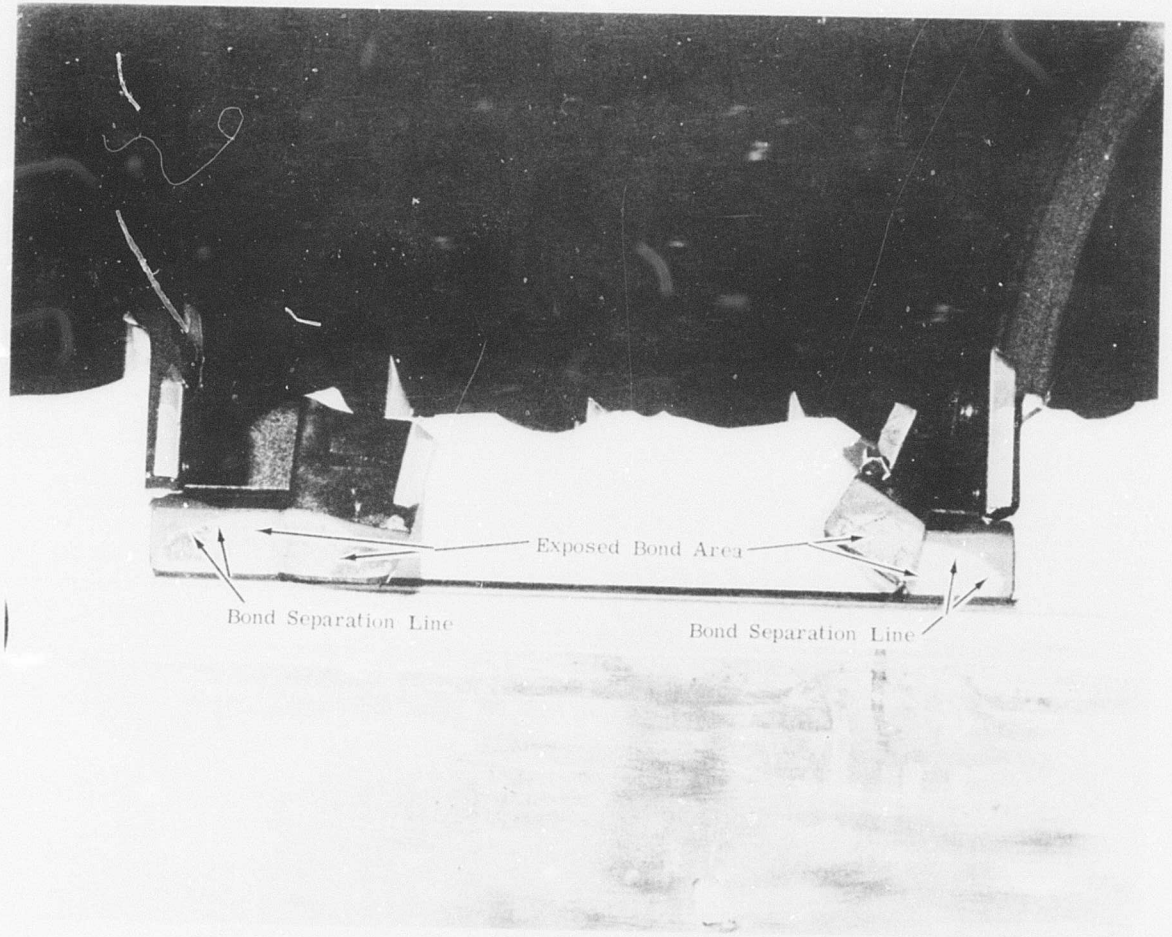

Figure 46. First S-61 Fatigue Specimen; Center Control Pocket Bond Separations at Teardown.

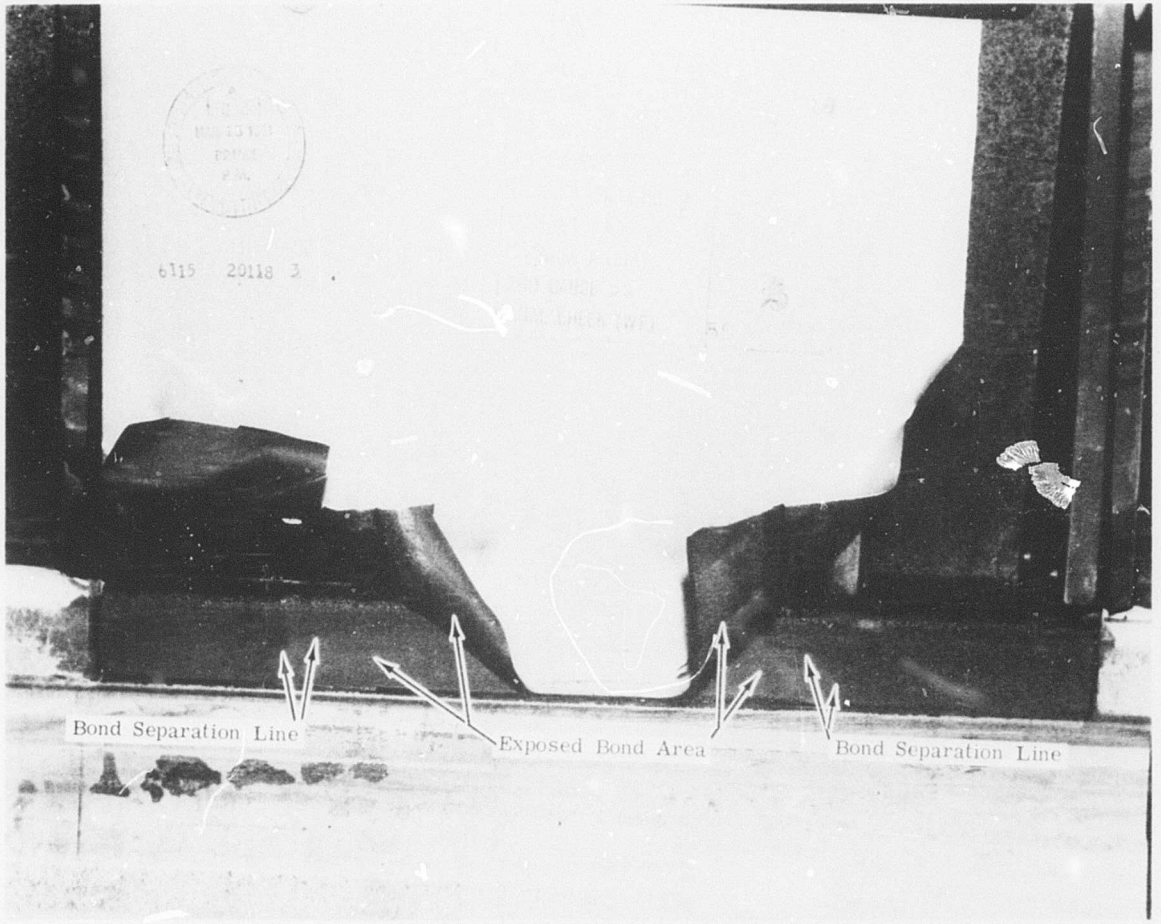

Figure 47. Second S-61 Fatigue Specimen; Center Control Pocket Bond Separations at Teardown.

ADHESIVE FATIGUE QUALIFICATION

Fifteen universal pockets were to be fabricated and five pockets bonded to 10-foot test sections of a CH-54 helicopter main rotor blade utilizing the field jigging and selected adhesive system. Using the selected adhesive, three five-pocket blade sections were to be tested in fatigue by step testing in increasing load increments, each step consisting of a minimum of 3.0×10^6 cycles at a given load level. The combined loading was to be representative of that encountered in flight.

FATIGUE TEST BONDING PROCEDURE AND RESULTS

Candidate 1 adhesive was selected for the bonding of universal pockets to the three CH-54B fatigue specimens for testing in a 100K machine per Figure 48.

Fifteen universal pockets, S6405-15006, were fabricated in production tools with production nitrite-phenolic primers and adhesives and inspected by Quality Control personnel to production requirements.

The CH-54B blade spar sections for the fatigue test were processed through the chromic acid anodize line, oven dried and primed with the production nitrite-phenolic primer. Five CH-54B production pockets were bonded to the spar with the production nitrite-phenolic adhesive in a production tool in the bonding room, similar to Figure 43. All operations were monitored by Quality Control personnel and inspected to production requirements.

Universal pockets were bonded to the blade spar sections with the selected adhesive in three steps. In the first step, the center pocket was removed and a universal pocket bonded on the spar with one of the field jigging kits. In the second step, one pocket on either side of the center pocket was removed and two universal pockets were then bonded to the spar using both types of field jigging kits. This step was then repeated for the remaining two pockets. The bungee fixture was the first used and bonded a total of 8 universal pockets on the three specimens; the air bag fixture was used to bond 7 universal pockets on the three fatigue specimens. The bonding fixtures remained on the specimens for 20-24 hours for each pocket cure. Bonding was accomplished in the bonding room at 70°-74°F and a relative humidity of 50%-57%.

In the first CH-54B blade bond fatigue specimens, the center production pocket was deliberately damaged (Figure 49) and the individual steps necessary to bond on a replacement pocket were photographed. The center production pocket representing a damaged pocket was removed by teardown (Figure 50). The remaining residual adhesive on the spar was

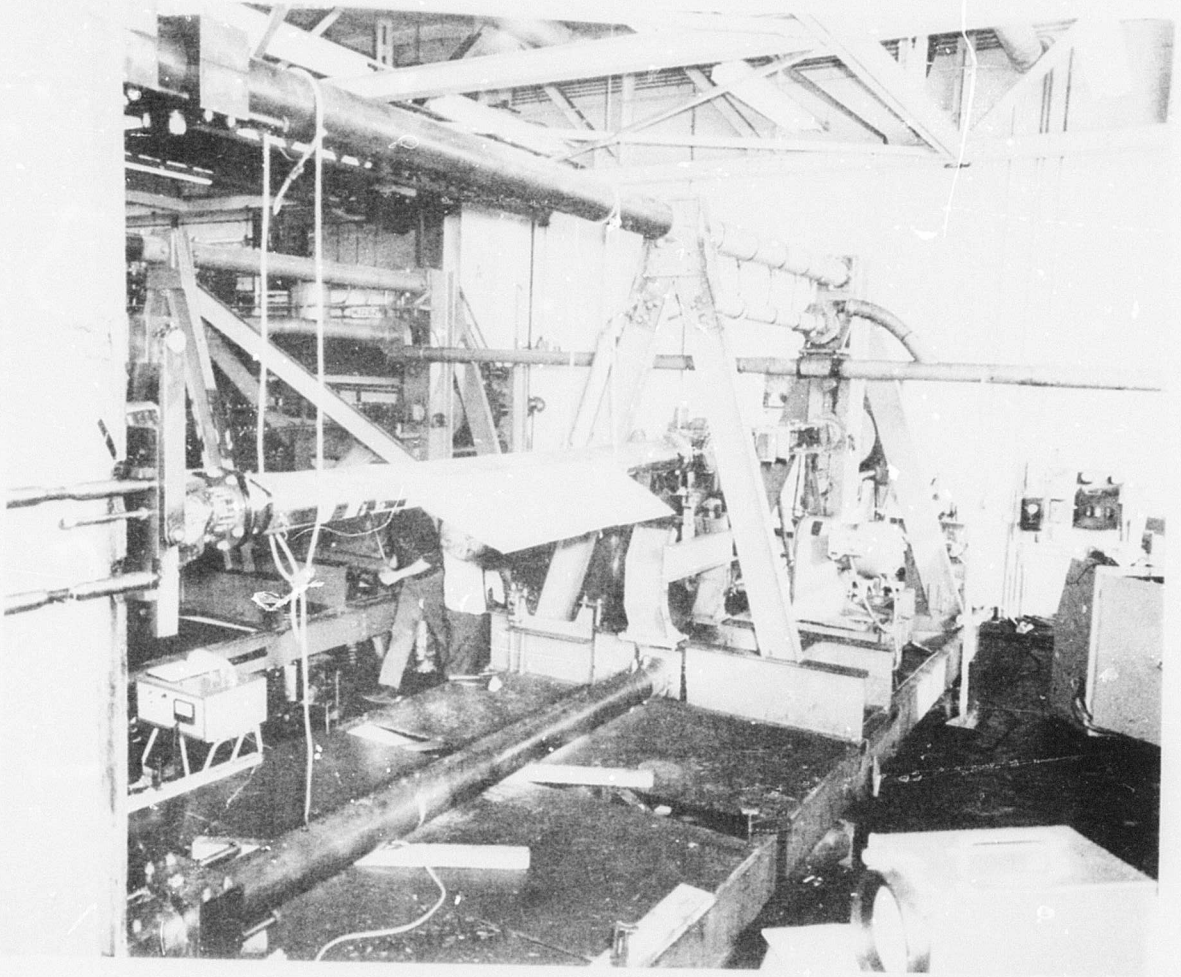

Figure 48. Adhesive Fatigue Evaluation Test, CH-54 Blade in a 100K Test Machine.

sanded with #80 grit paper (Figure 51), and the sanded area was wiped clean with cheesecloth dampened with methyl-ethyl-ketone (Figure 52). Each universal pocket, 6405-15006, bonded to the spar was assembled with one 6405-15007-101 shim, one 6405-15007-103 spacer, and two 6405-15007-104 seals as shown in Figure 53. The pocket, shims, and spacers were cleaned with clean cheesecloth wet with methyl-ethyl-ketone per Figure 54. The selected adhesive was mixed at the ratio of 100 parts base to 22 parts curing agent. For each pocket, 0.20 lb of base was mixed with 0.044 lb of curing agent (Figure 55). The mixed adhesive was applied to the pocket ribs and skin and also to the split shims (Figure 56). The shims were then installed and the spar area of the pocket skin was then coated with adhesive. The spar was coated with adhesive (Figure 57),the spacer was installed and coated with adhesive (Figure 58), and the two rubber seals were installed in the two adjacent pockets. The replacement universal pocket was then positioned on the spar (Figure 59). The 6405-15011 bungee fixture (Figure 60) was then draped over the spar (Figure 61), connected in place (Figure 62) and allowed to cure for 20-24 hours (Figure 63). Any excess adhesive squeeze-out was removed at this time with clean cheesecloth dampened with methyl-ethyl-ketone. The entire operation from the removing of the pocket to the cleaning of the excess adhesive was accomplished by one man in less than 1 hour. Figure 64 is a photograph of the items used.

FATIGUE TEST PROCEDURE

The fatigue specimens were tested at the ambient atmospheric temperature and humidity conditions present in the test laboratory. A CH-54B blade fatigue specimen was instrumented as shown in Figure 65 and the strain gages were physically calibrated by means of dead weights. This instrumented blade was then installed in a 100,000-lb blade fatigue test machine and used to establish all test conditions outlined in Table VI. Once the amplitude was recorded at 1/4 span and 1/2 span for each load level, the instrumented blade specimen was removed and the adhesive fatigue blade specimen was then installed in the machine, per Figure 48, and the centrifugal load applied. An amplitude stylus was attached securely to the leading edge and the specimen was run at the amplitude established by the instrumented blade for each load level. Figure 66 presents the vibratory stress distribution across the pockets for these tests. The step testing was conducted the same as reported in the Fatigue and Proof Tests section.

After completion of the third and highest load level, the specimen was removed from the machine and the pockets were removed by teardown and the amount of bond separation was measured.

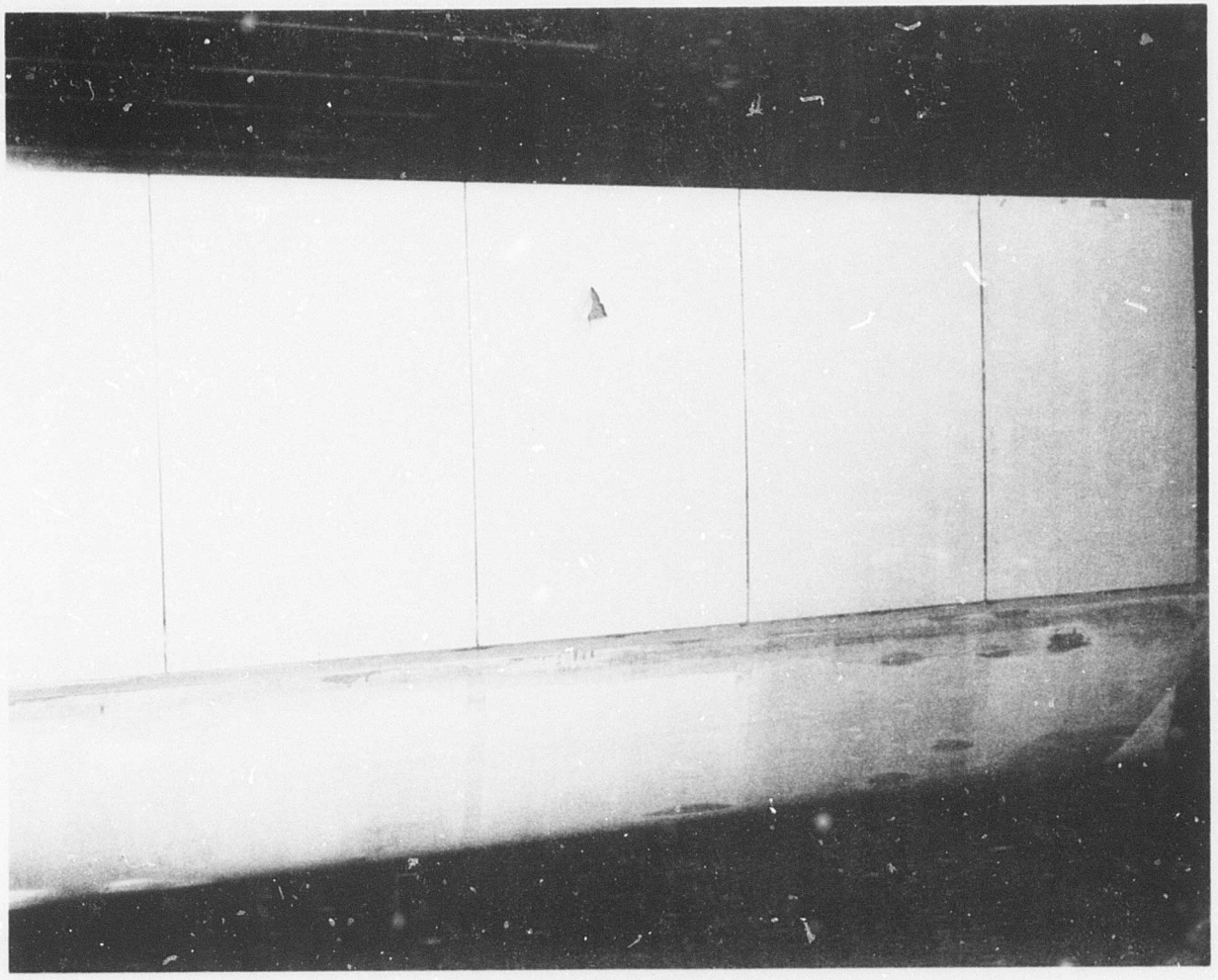

Figure 49. Damaged CH-54 Blade Pocket.

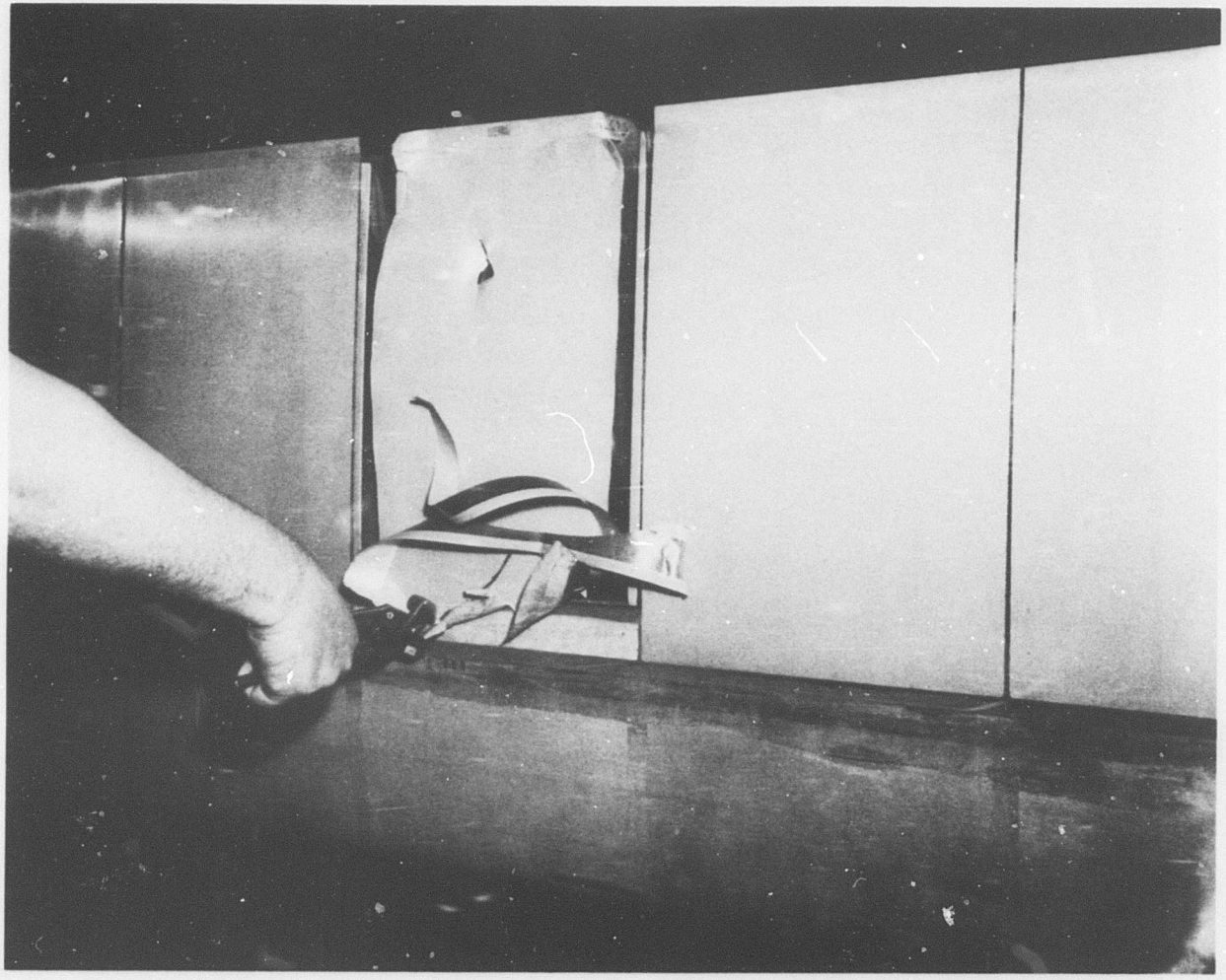

Figure 50. Removing a Damaged Blade Pocket.

Figure 51. Sanding Residual Adhesive Remaining on Blade Spar.

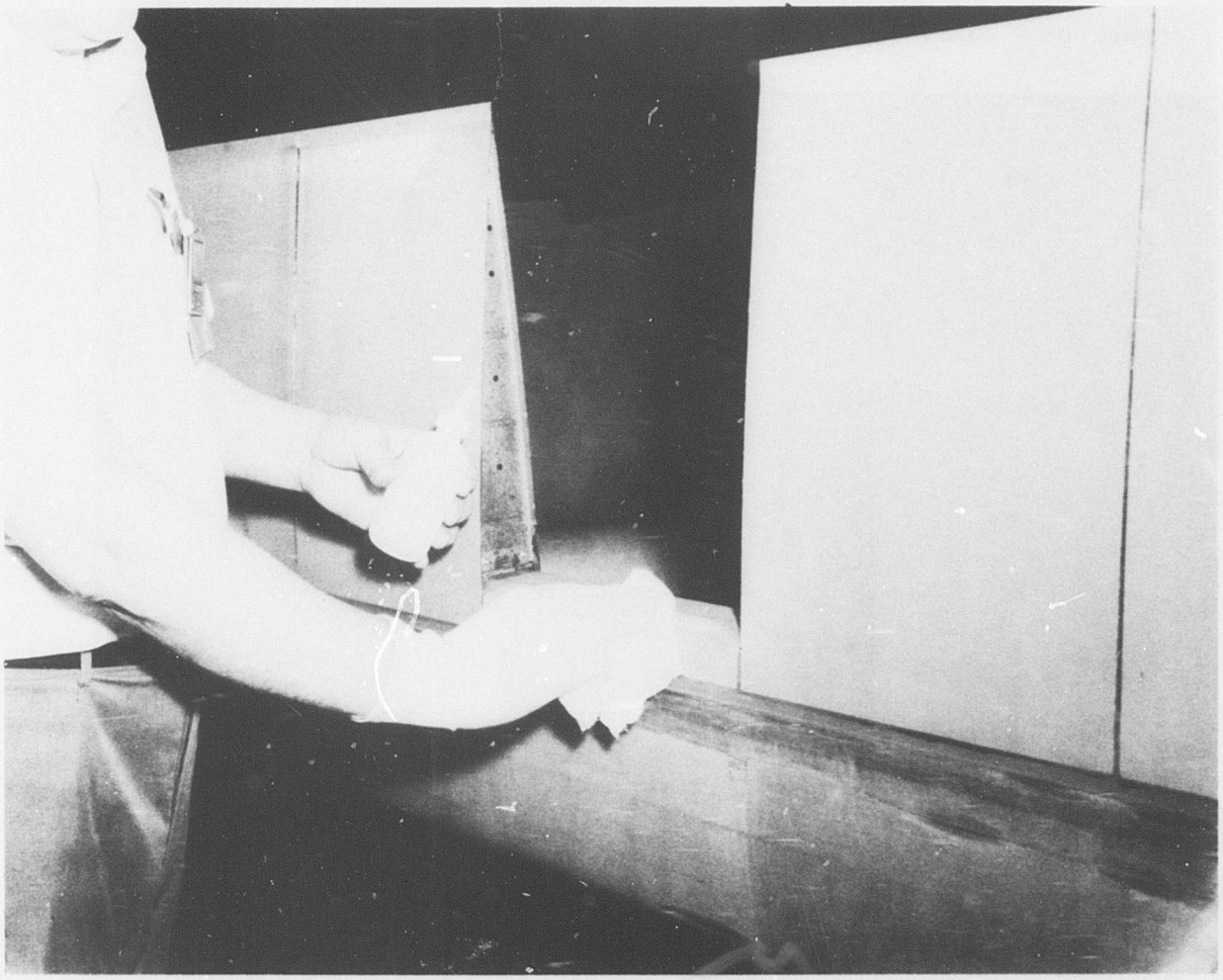

Figure 52. Cleaning the Sanded Adhesive With Methyl-Ethyl-Ketone.

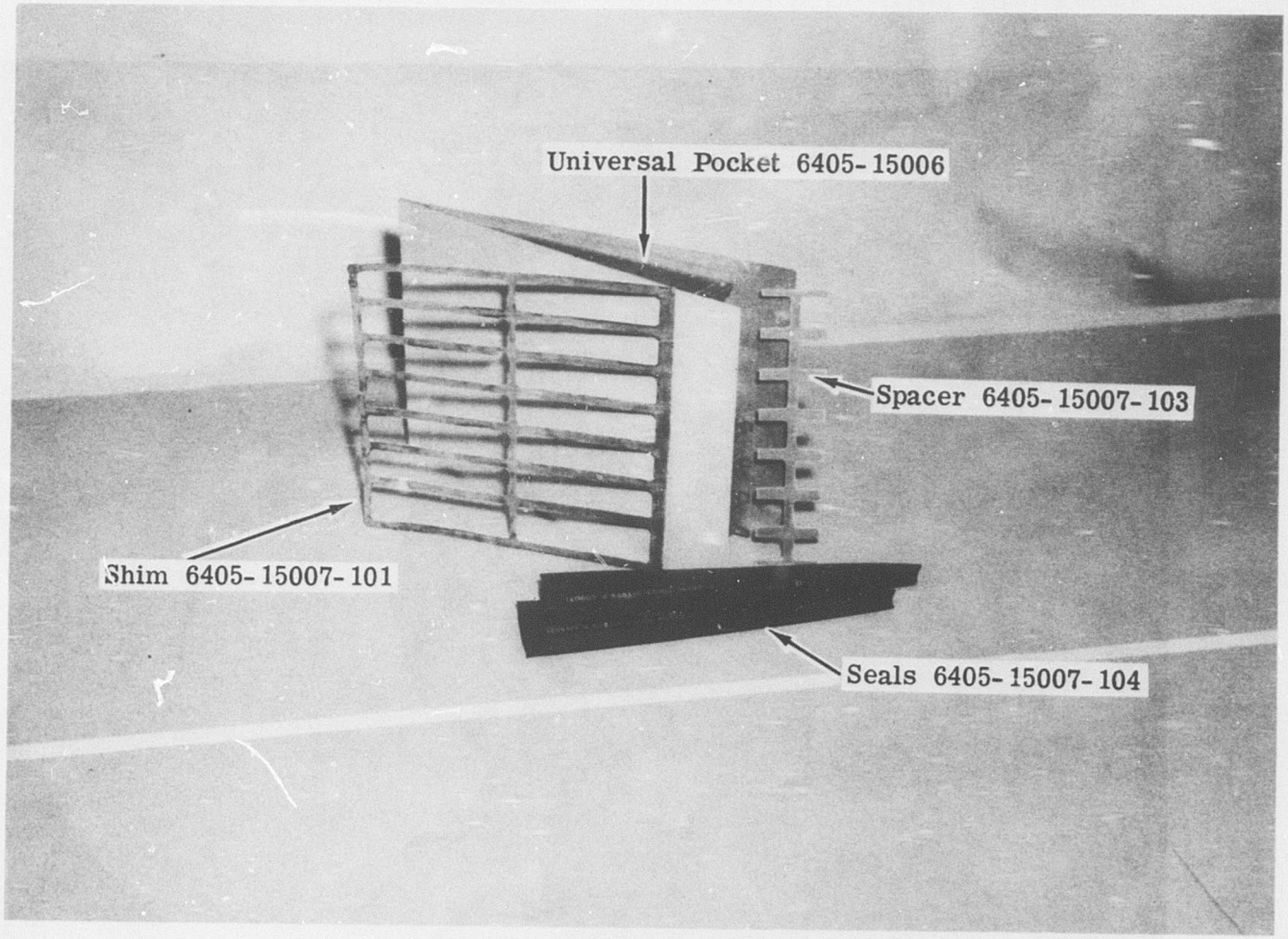

Figure 53. Universal Pocket Kit.

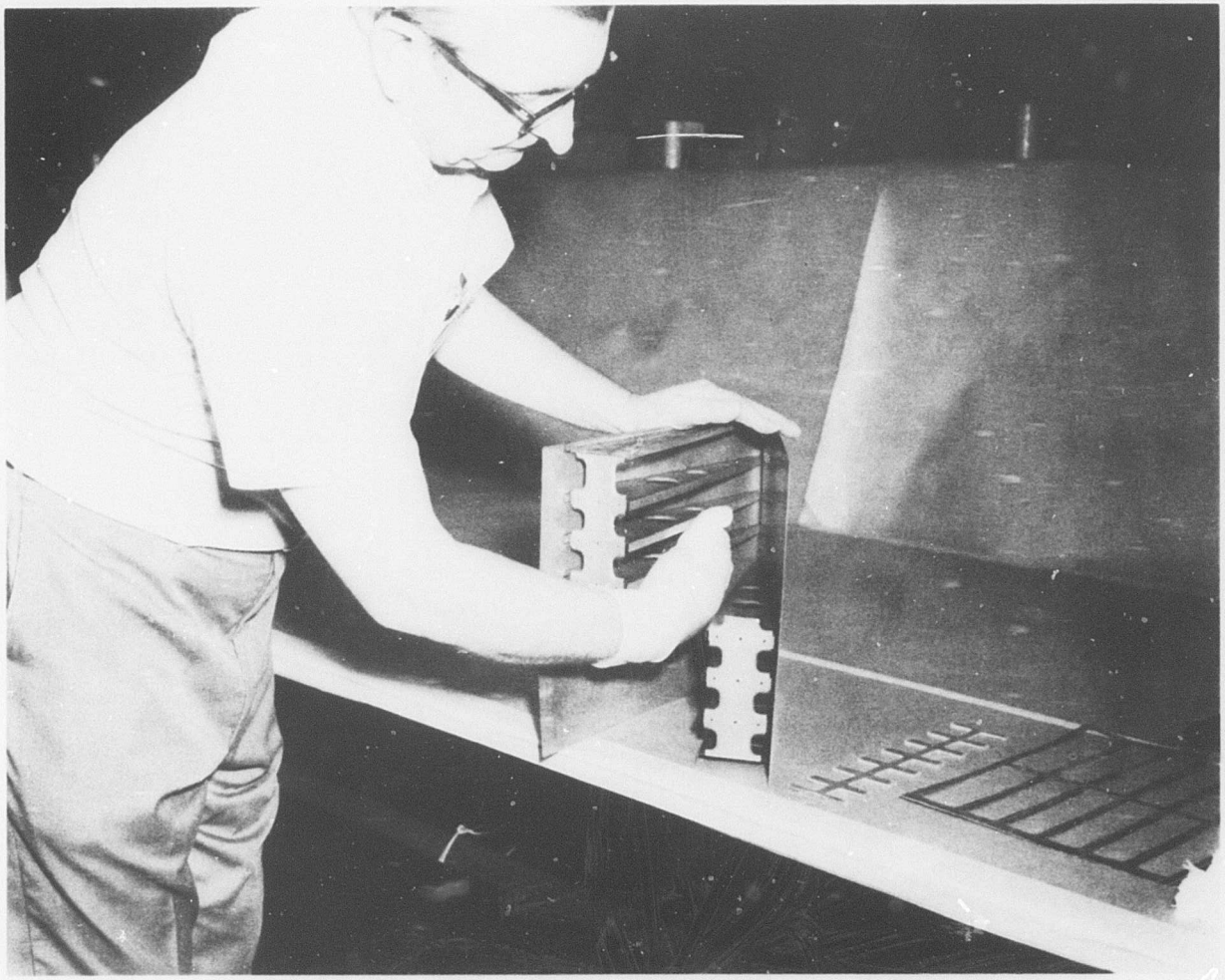

Figure 54. Cleaning the Universal Pocket With Methyl-Ethyl-Ketone.

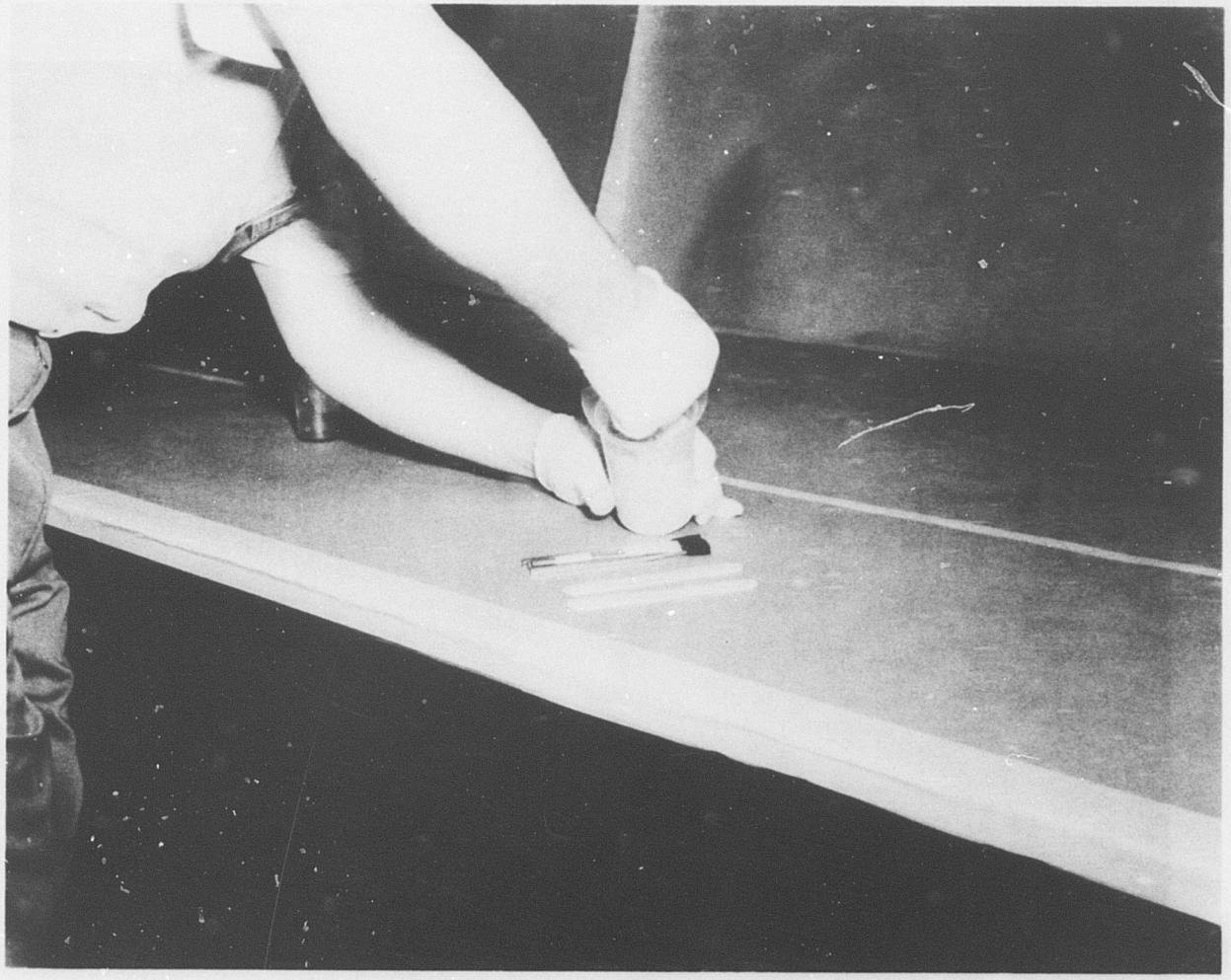

Figure 55. Hand Mixing the Selected Adhesive.

Figure 56. Application of Mixed Selected Adhesive to Universal Pocket.

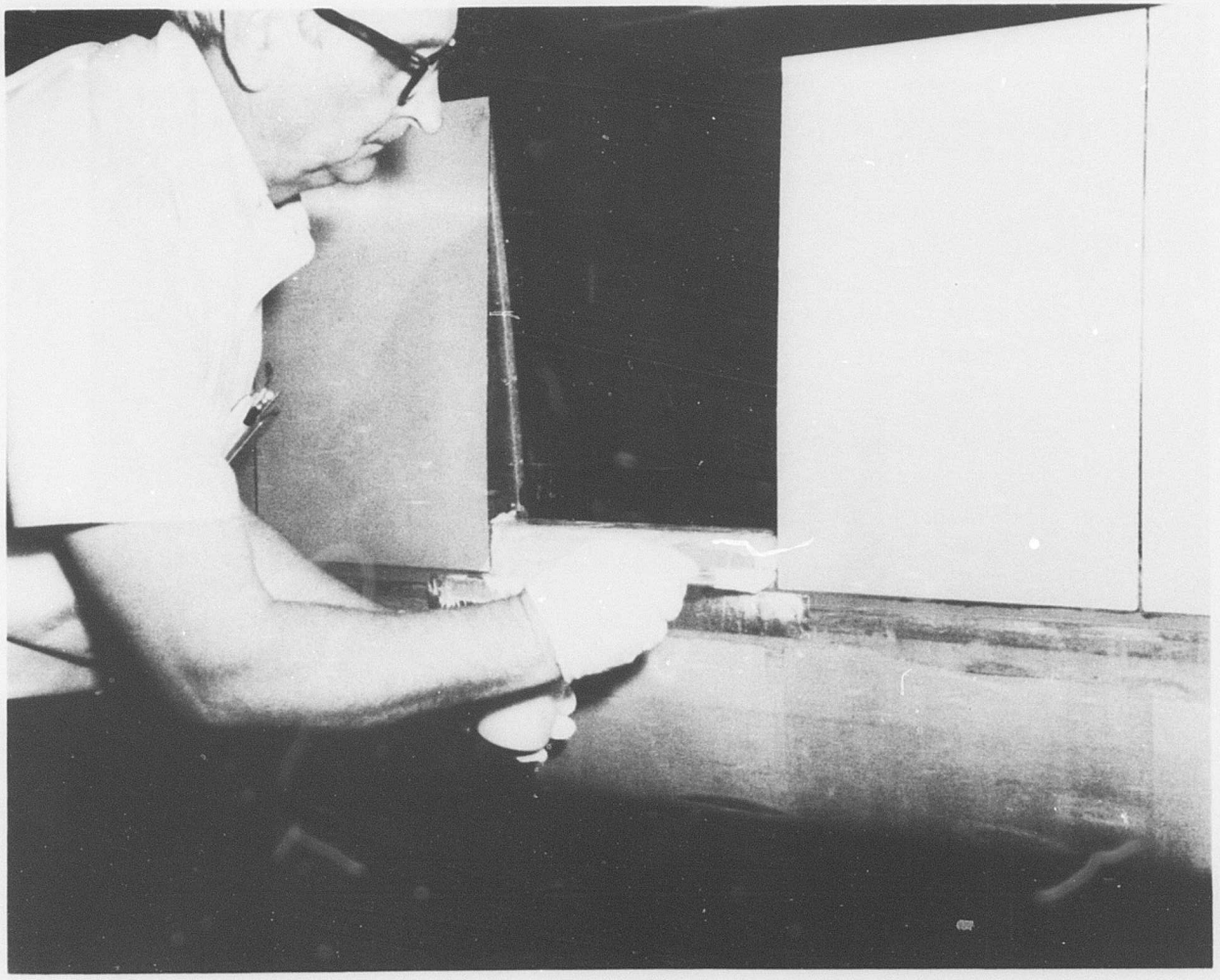

Figure 57. Application of Mixed Selected Adhesive to Blade Spar.

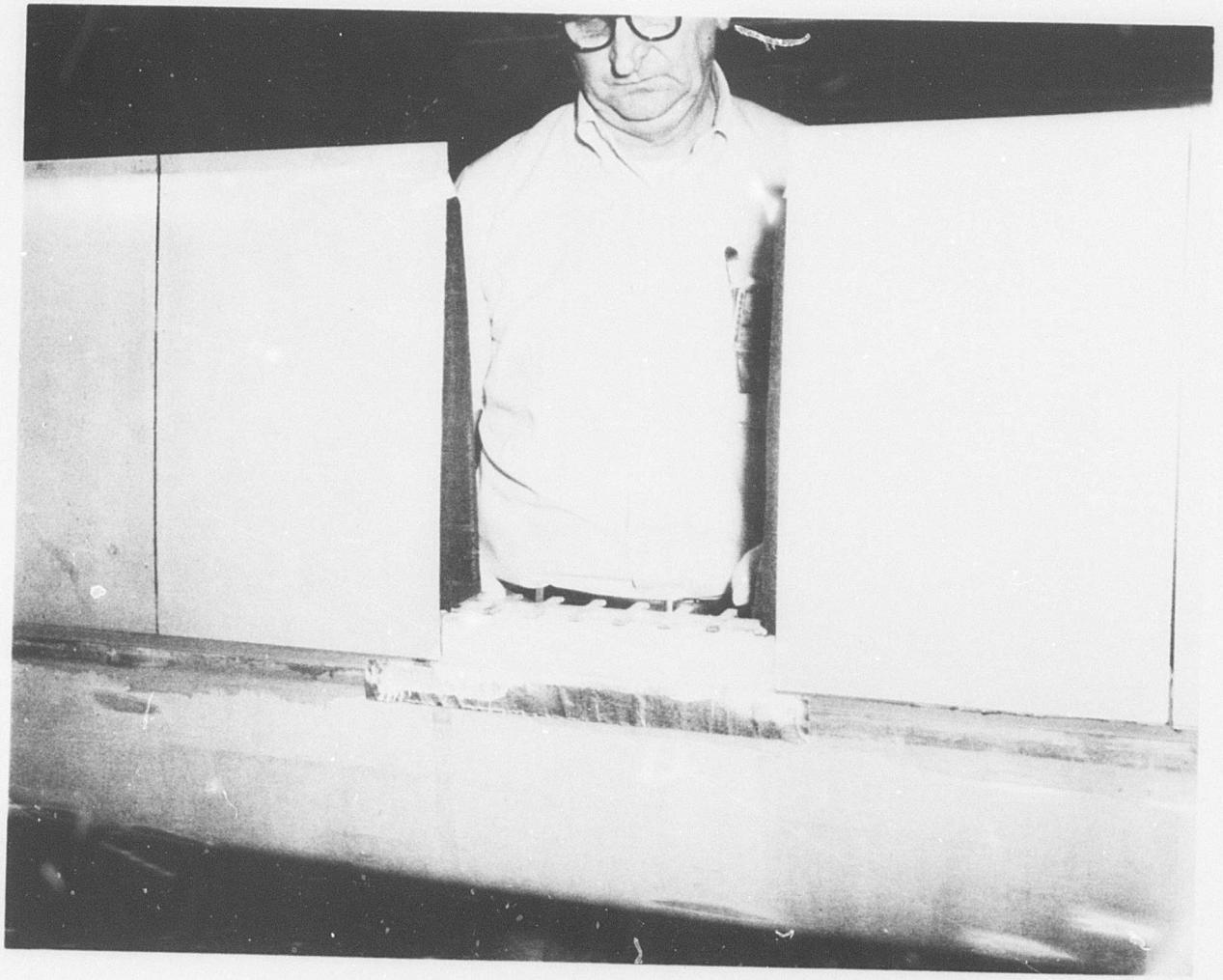

Figure 58. Installation of Spacer 6405-15007-103.

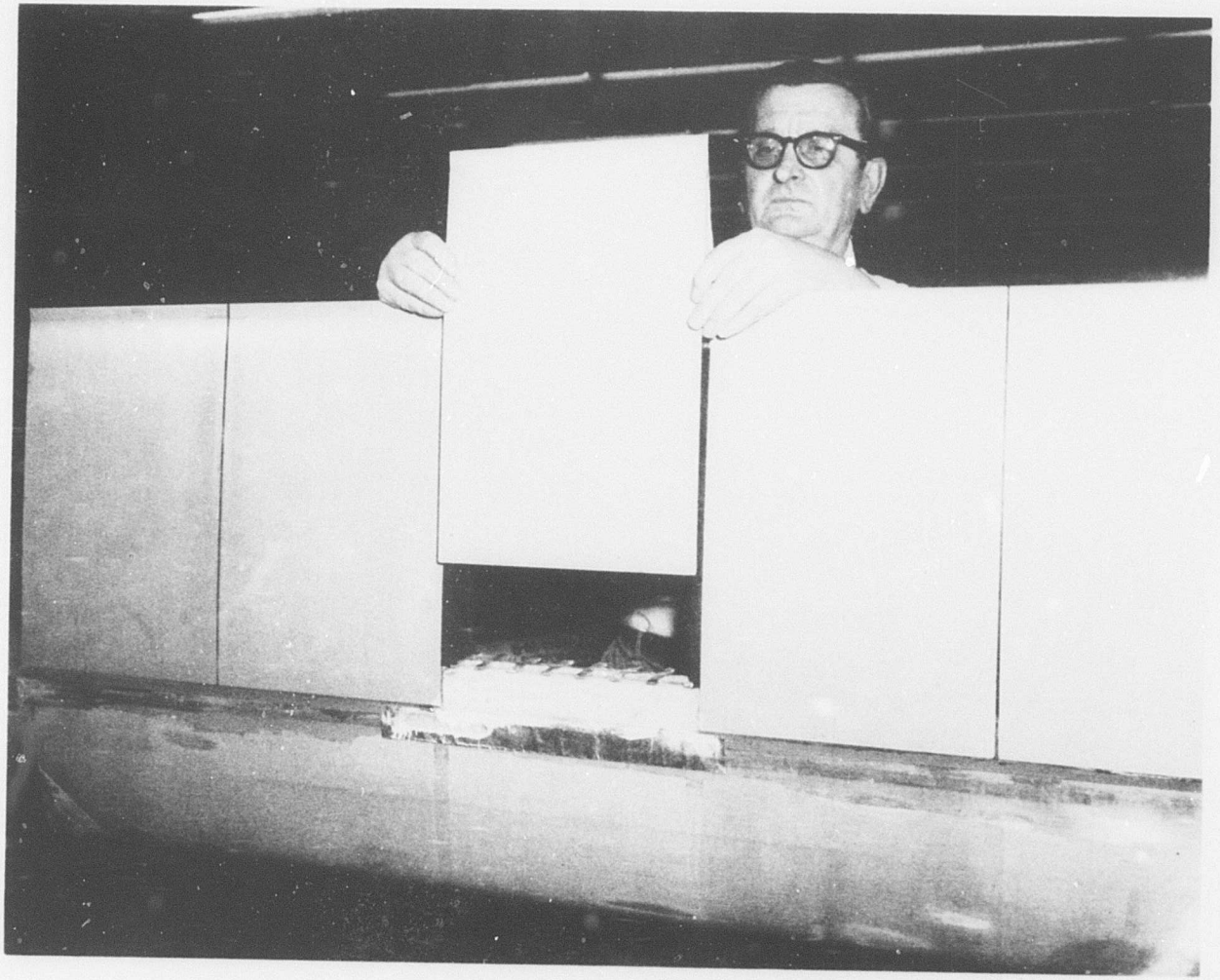

Figure 59. Positioning Universal Pocket on Blade Spar.

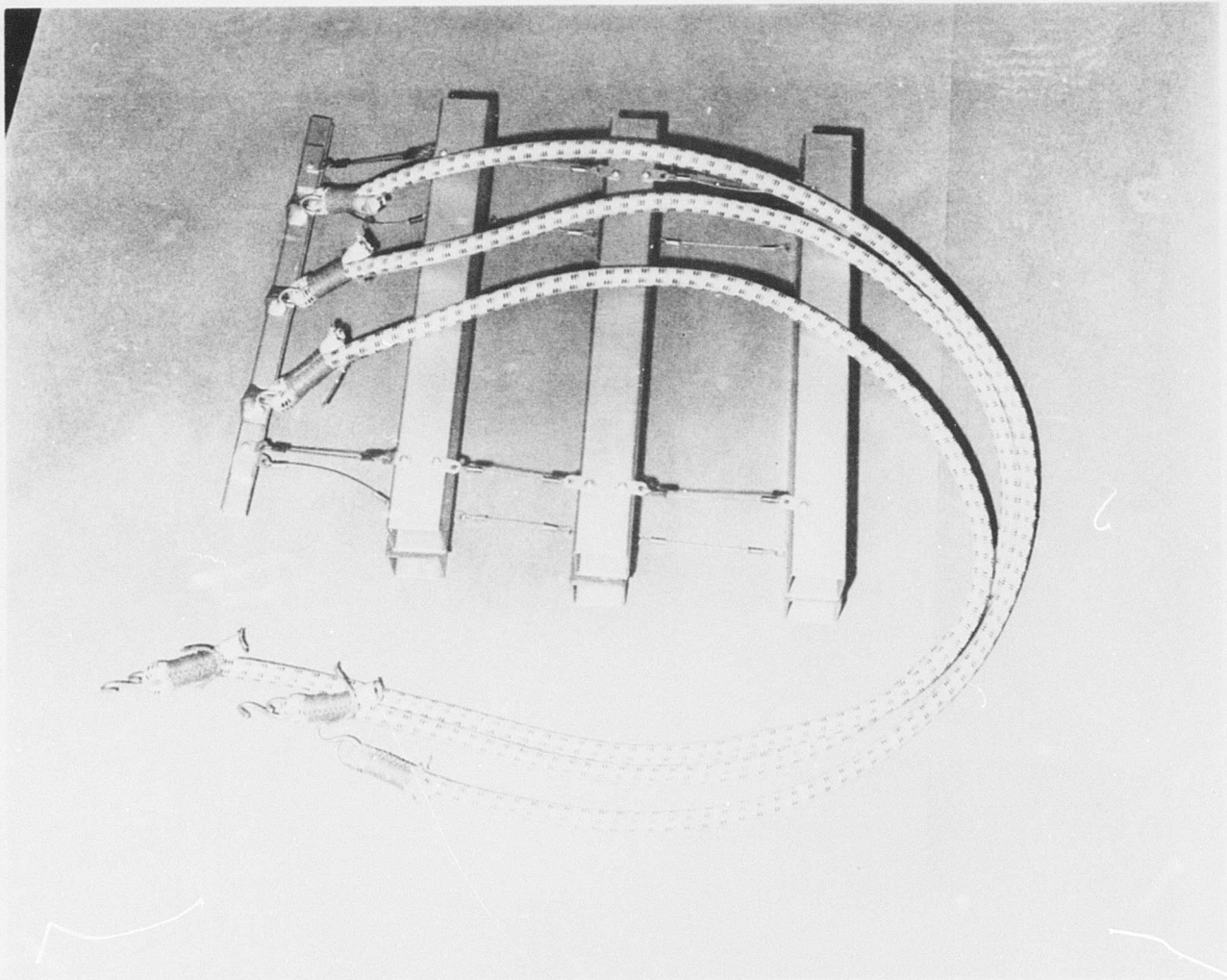

Figure 60. Bungee-Cord Field Jigging Kit 6405-15011.

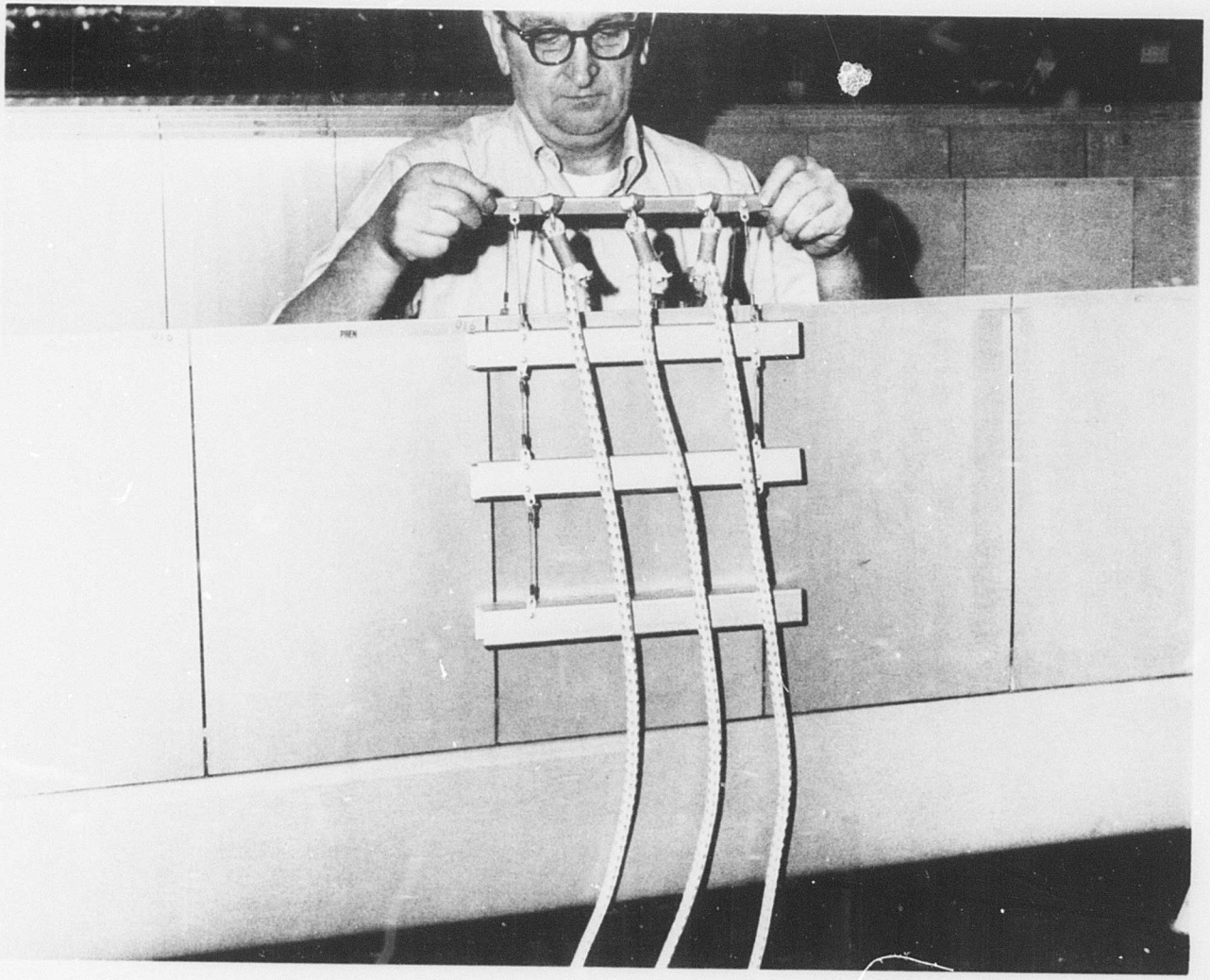

Figure 61. Installation of Field Jigging Kit.

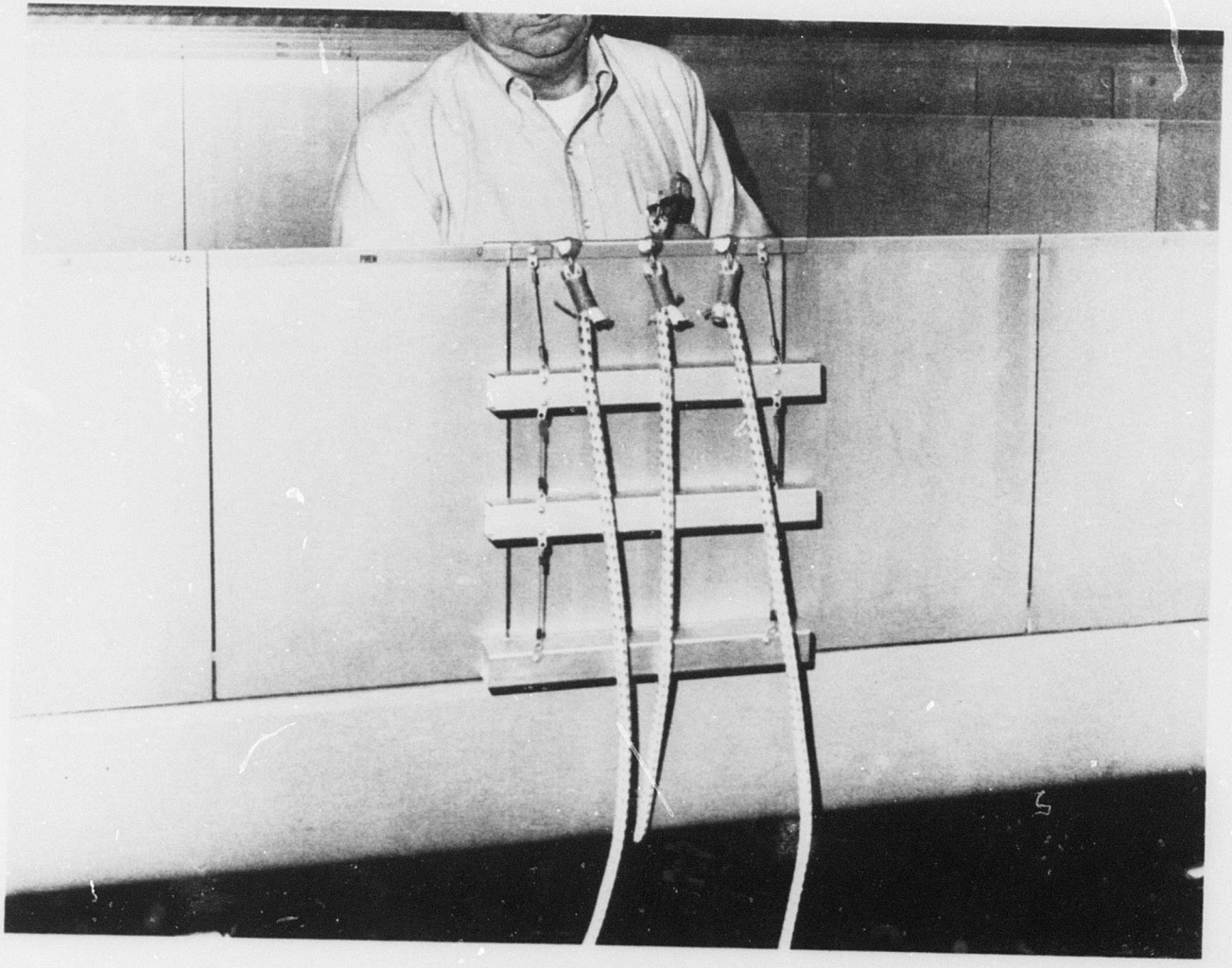

Figure 62. Connecting Ends of Bungee Cord to Universal Pocket Trailing Edge.

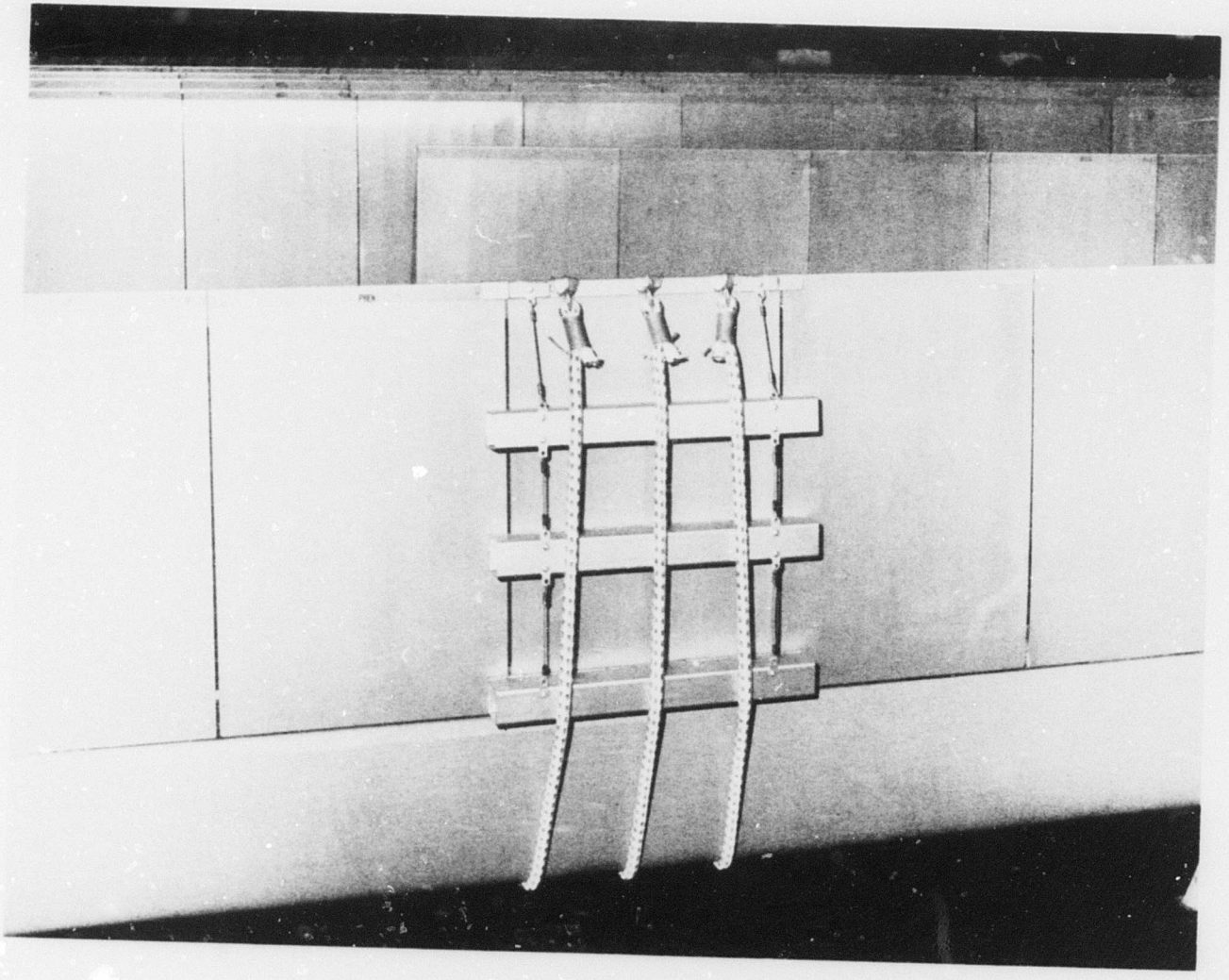

Figure 63. Field Jigging Kit in Position.

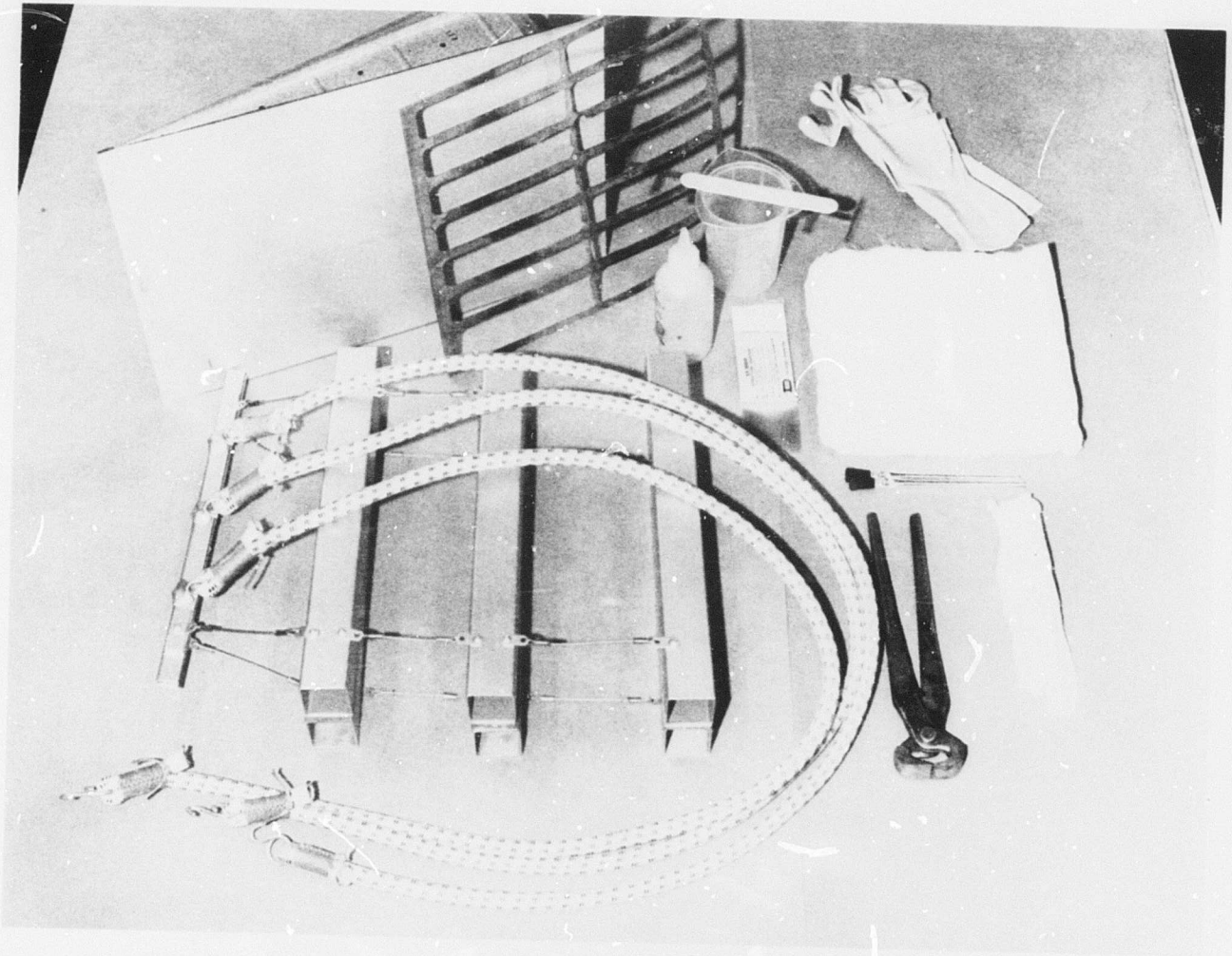

Figure 64. Components Necessary To Repair a Damaged Pocket.

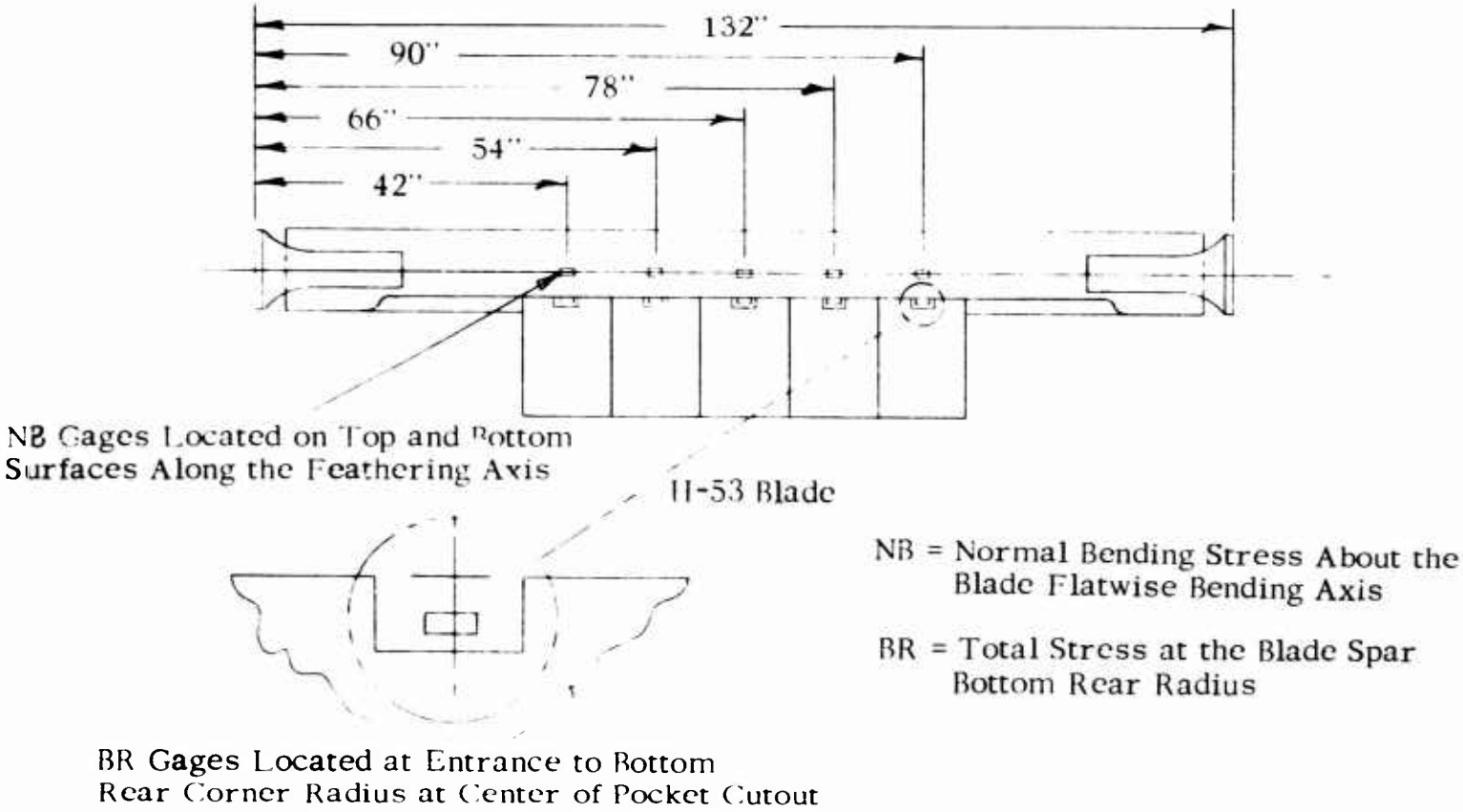

Figure 65. Instrumented CH-54 Blade Fatigue Specimen.

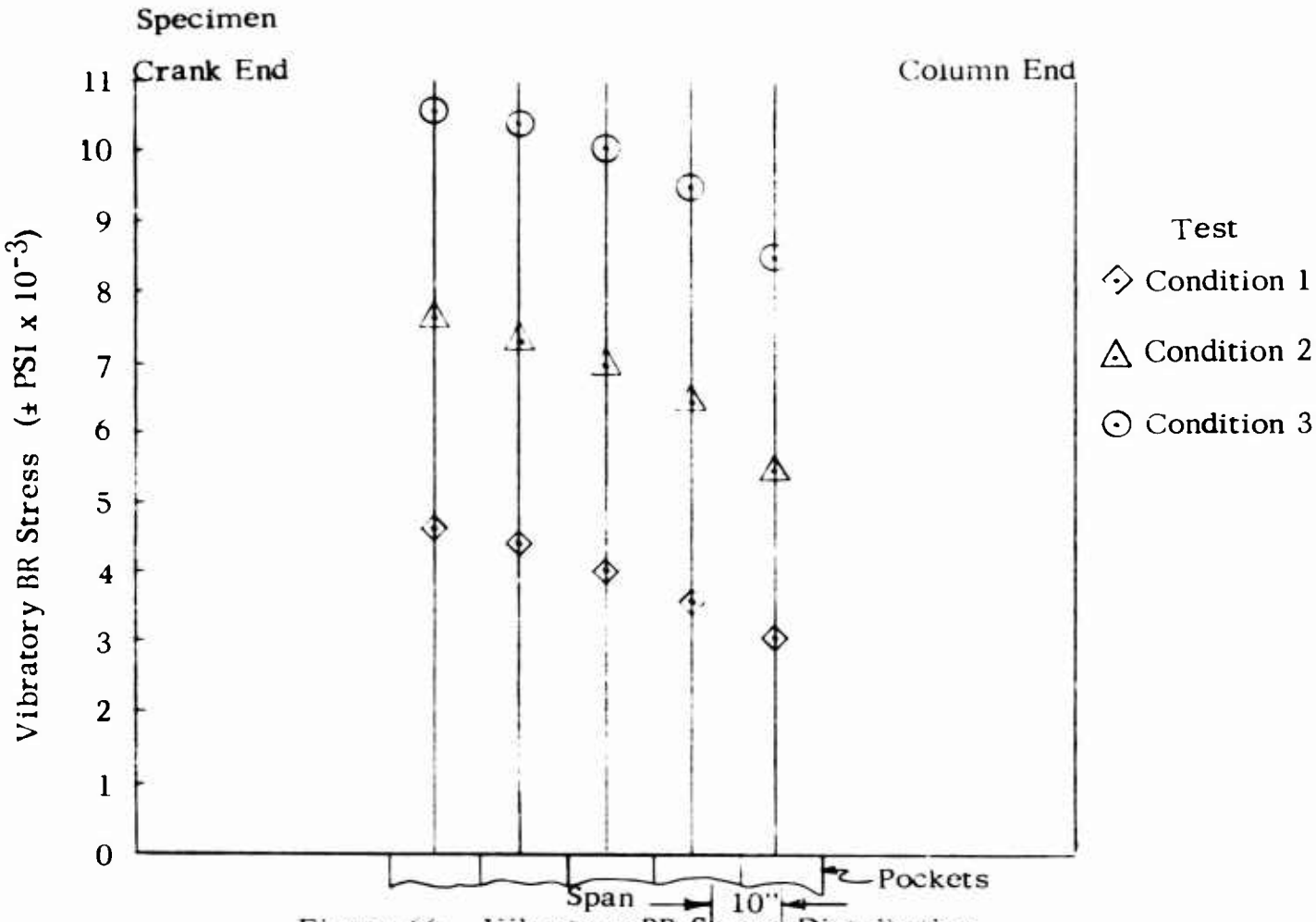

Figure 66. Vibratory BR Stress Distribution for CH-54 Blade.

TABLE VI. H-54 POCKET-TO-SPAR ADHESIVE BOND EVALUATION TEST CONDITIONS

Test Condition	Steady BR Stress at Midspar (psi)	Vibratory BR Stress at Midspar (psi)	Cycles x 10^6	Specimen Amplitude in In.	
				1/4 Spar	1/2 Spar
1	+ 10,500	± 4.000	3.0	42/64	1.0
2	+ 10,500	± 7,000	3.0	1-8/64	1-45/64
3	+ 10,500	±10,000	3.0	1-39/64	2-20/64

In the first specimen, three pockets were bonded with the bungee fixture and two with the air bag fixture. The pockets bonded with the bungee fixture had slightly thicker glue lines in the rib-to-skin bond than the pockets bonded with the air bag. However, there were no separations in this bond after fatigue testing, and during teardown of the pocket skin from the rib flanges, the failure occurred in the phenolic shims and not in the glue line. This failure of the phenolic was static during the removal of the pocket; it is not expected to occur in service. Note that during the proof load tests the pockets failed well above the required strength and the failure was in the pocket skin, not in the phenolic spacer. There was no discernible difference in the pocket-to-spar glue line between pockets bonded with either field jigging fixture. The selected adhesive had no indication of pocket-to-spar bond separation after 3.0×10^6 cycles at the lowest level, nor after 3.0×10^6 cycles at the second load level. However, Quality Control personnel did detect a slight separation, after 0.5×10^6 cycles at the third and highest load level, on the center pocket. The separations gradually increased, and Figure 67 is an inspection form completed after the pocket-to-spar bond was inspected by coin tapping after 0.9×10^6 cycles at the third load level. The test stopped at 2.525×10^6 cycles of the third load level when the spar failed. Figure 68 is an inspection form completed after teardown of the pocket-to-spar bond showing the extent of bond separations. These separations noted in inches are chord measurements only. The separations had not progressed to the leading edge of the pocket; therefore, the spanwise separations are not measured. Note detail A of Figure 44. These separations are smaller than those experienced with the production nitrite-phenolic adhesive after 3.0×10^6 cycles at this highest load level and are plotted in Figure 69. The points plotted for the candidate adhesive are the corners of each pocket on the bottom side for a total of 10 points. This test does not produce pocket corner separations on the top side of the specimen. The 8 data points for the production adhesive on Figure 69 and subsequently are from past fatigue tests conducted prior to the subject contract, i.e., they are typical test points for the production adhesive.

On the second specimens, three pockets were bonded with the air bag fixture and two with the bungee fixture. No differences could be determined in the pocket-to-spar bond between either field jigging fixture. No separations could be detected by Quality Control personnel in the pocket-to-spar bond after 3.0×10^6 cycles at the first and lowest load level nor after 3.0×10^6 cycles at the second load level. After 0.5×10^6 cycles at the third and highest load level, Quality Control personnel did detect a slight separation in one of the pockets. Figure 70 is an inspection form completed at that time. The separations gradually increased as shown by Figure 71 after 2.0×10^6 cycles and Figure 72 at teardown after 3.0×10^6 cycles. Figure 73 is a bond separation comparison

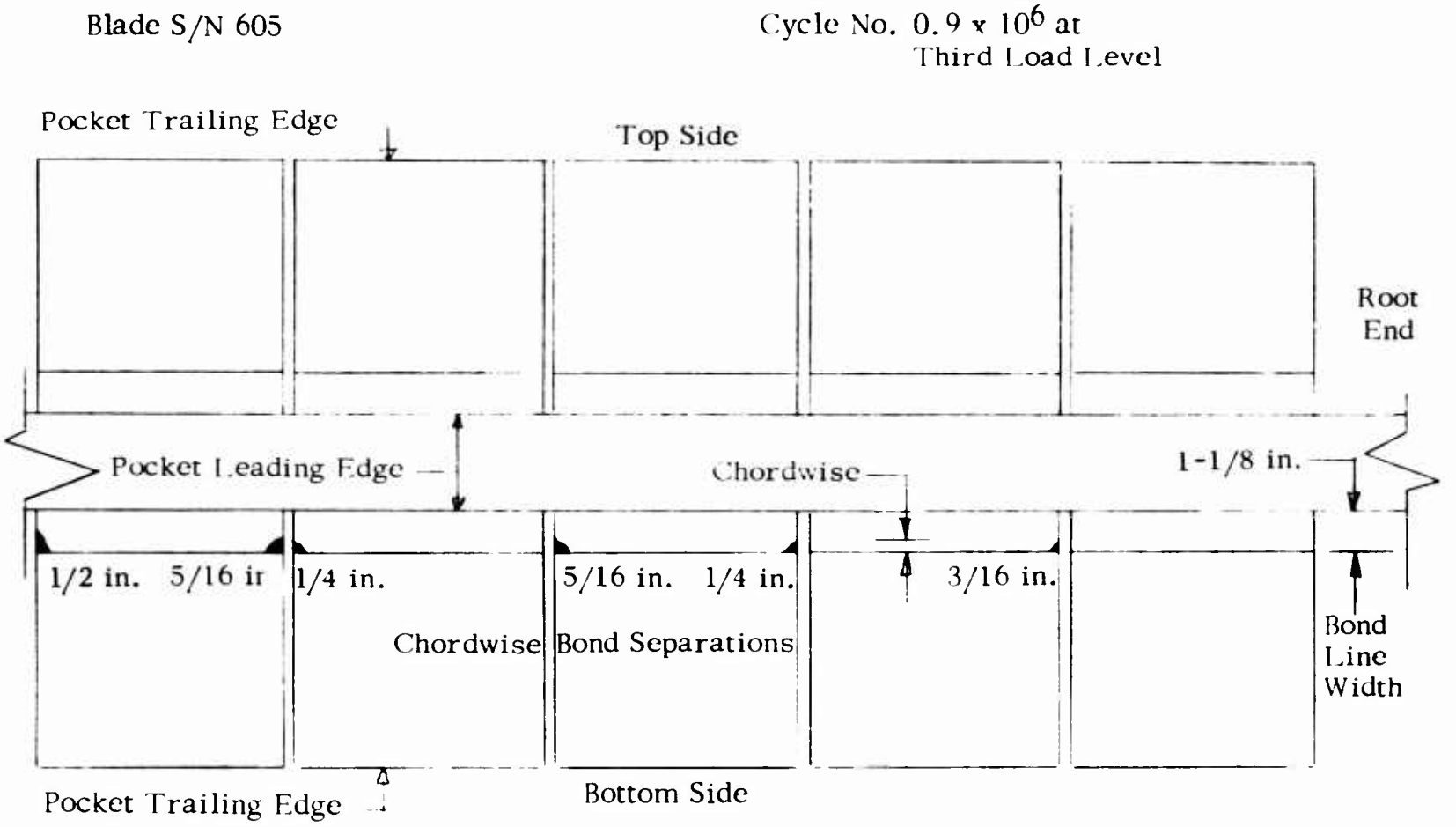

Figure 67. Pocket-to-Spar Bond Separation After 0.9 x 10^6 Cycles at the Third Load Level on First CH-54 Fatigue Specimen.

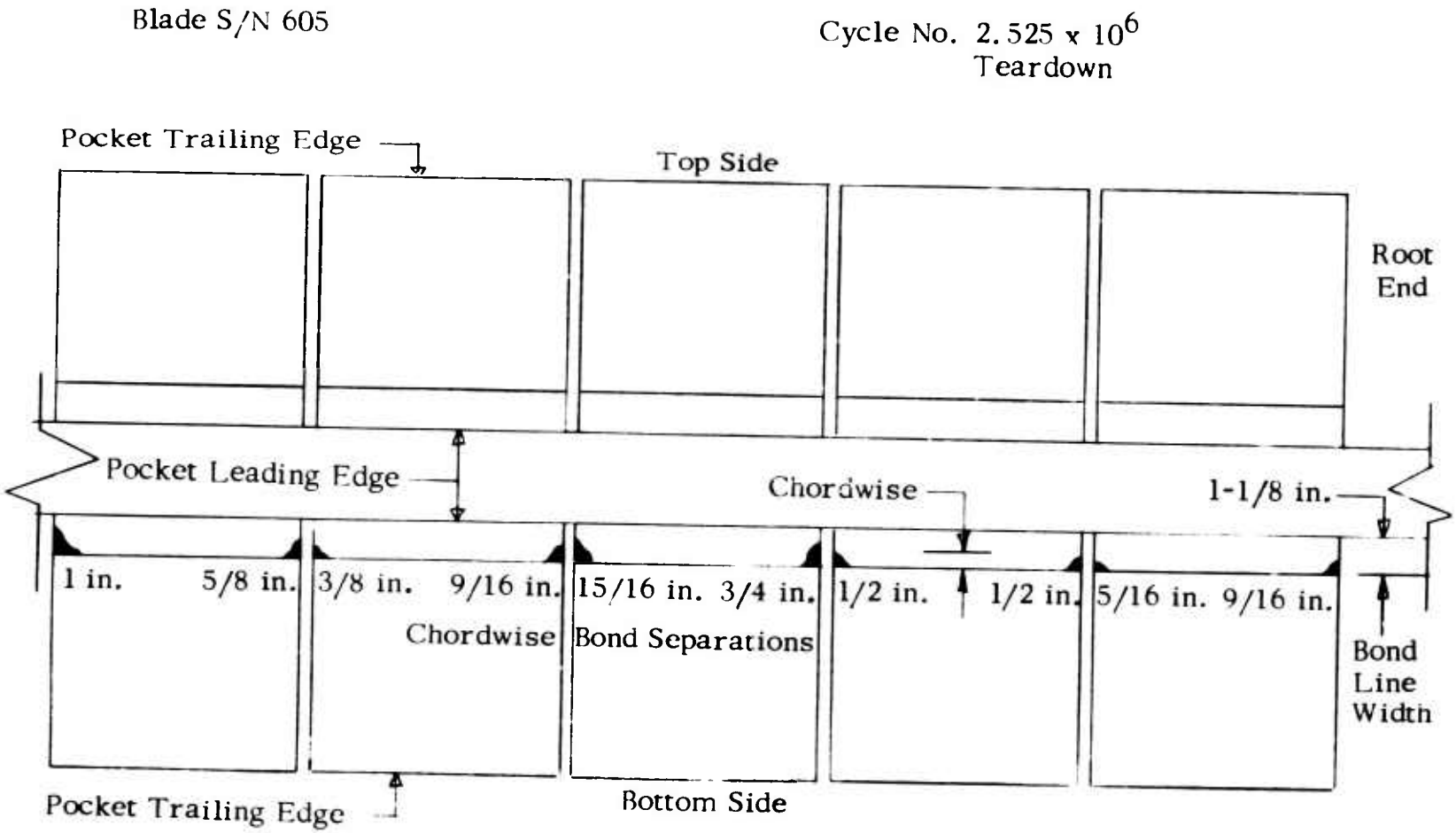

Figure 68. Pocket-to-Spar Bond Separations After 2.5×10^6 Cycles at the Third Load Level on First CH-54 Fatigue Specimen.

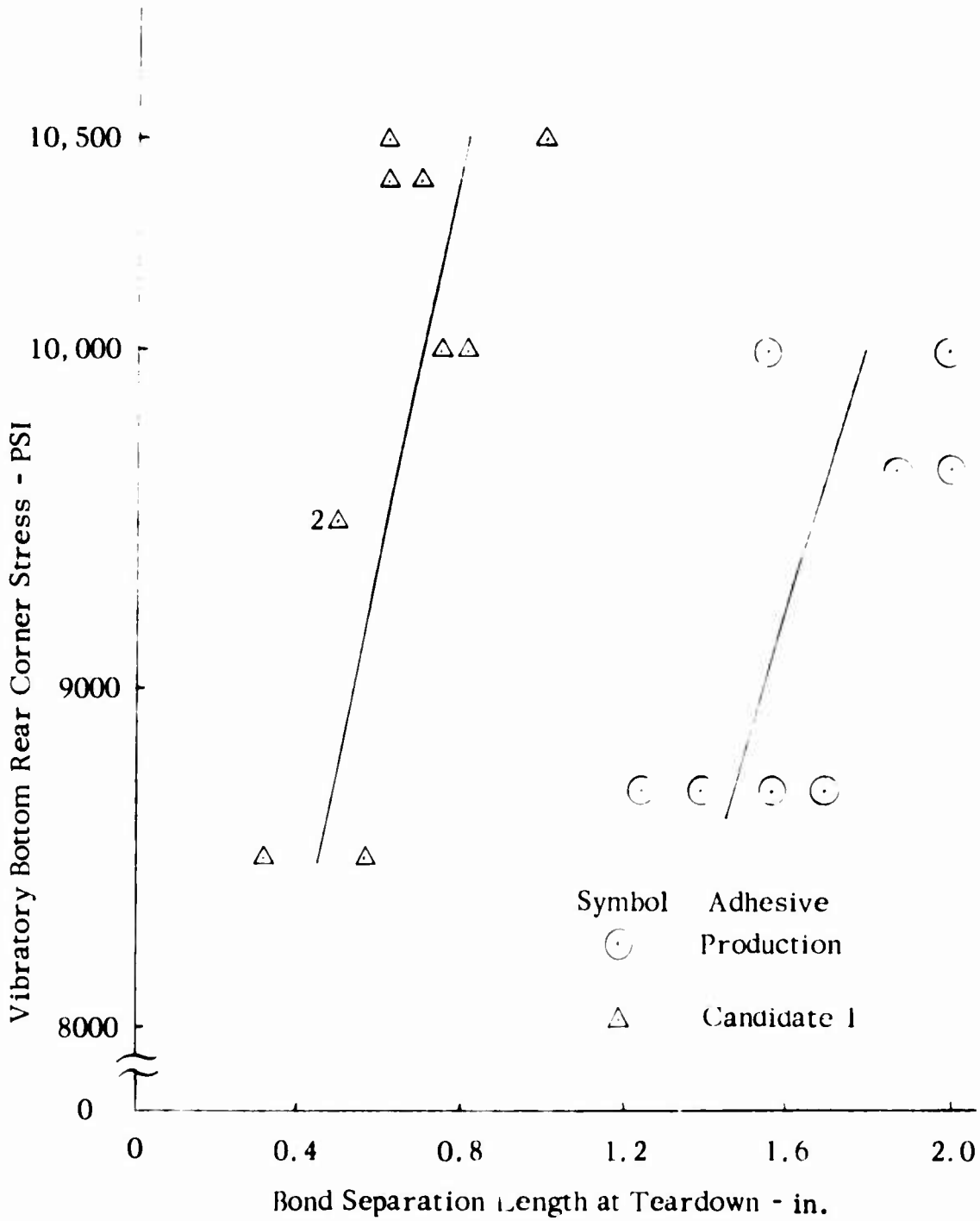

Figure 69. Selected Adhesive Bond Separations on First CH-54 Fatigue Specimen at Teardown; Total Cycles 8.5×10^6.

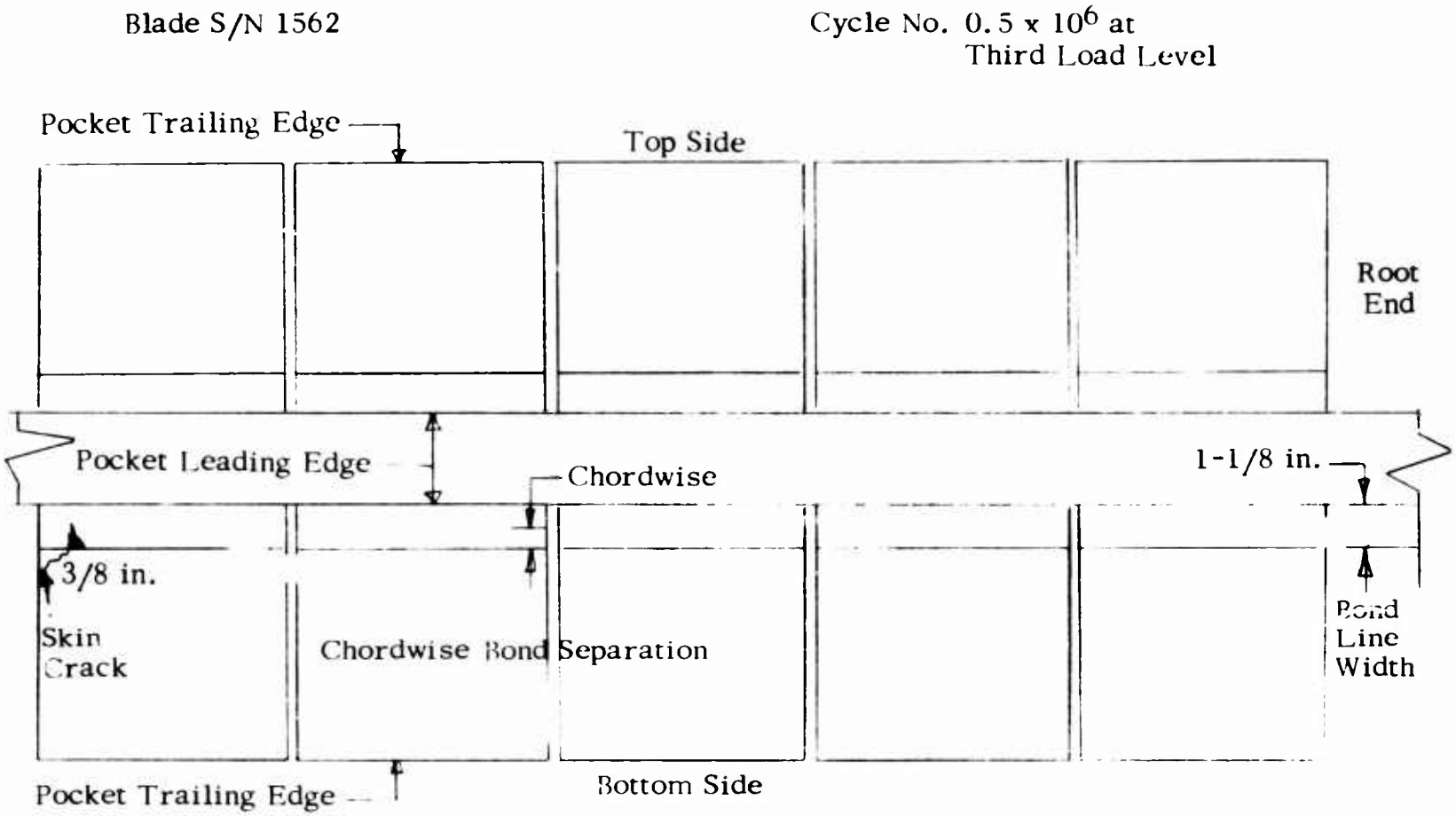

Figure 70. Pocket-to-Spar Bond Separations After 0.5 x 10^6 Cycles at the Third Load Level on Second CH-54 Fatigue Specimen.

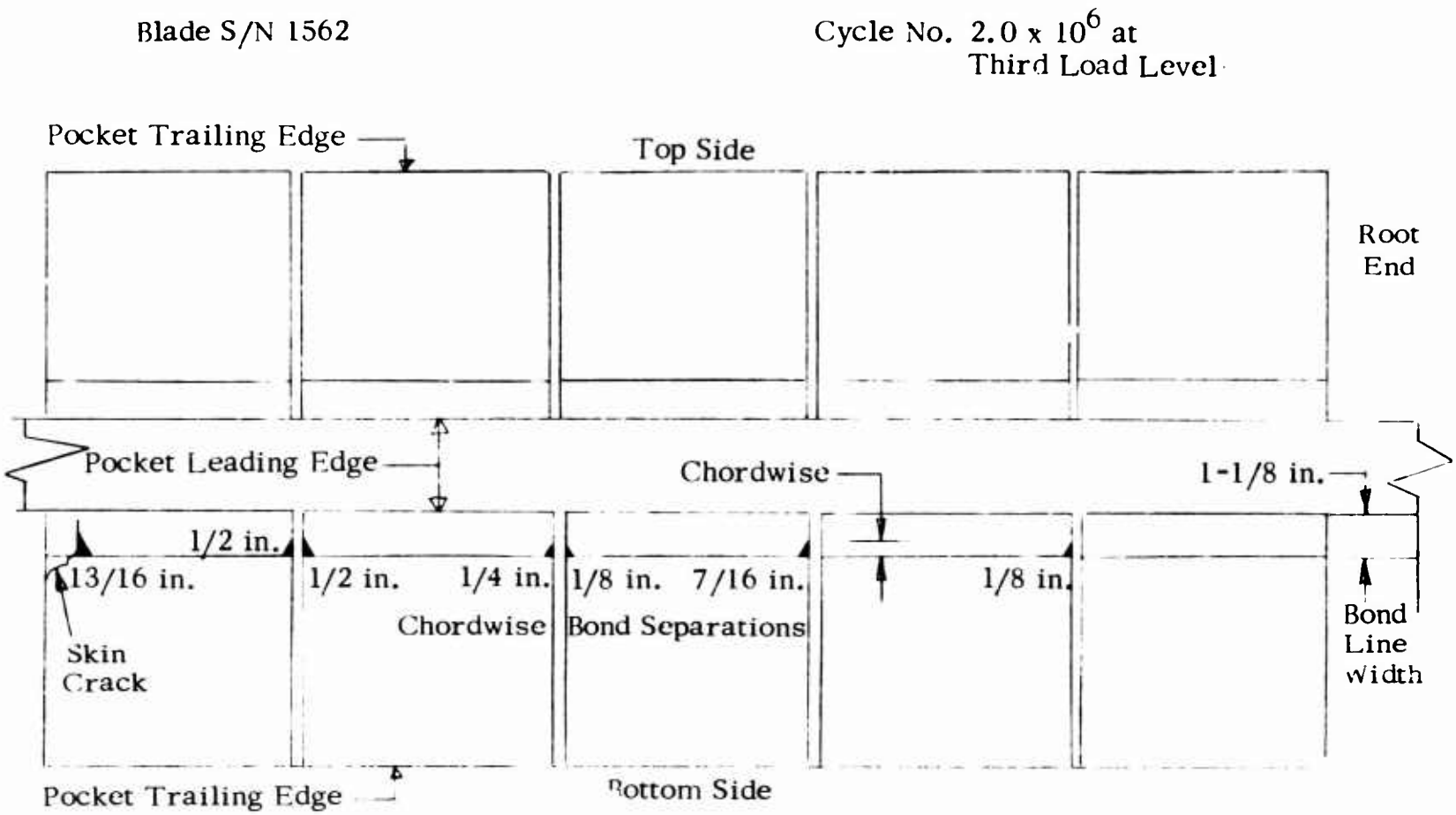

Figure 71. Pocket-to-Spar Bond Separations After 2.0×10^6 Cycles at Third Load Level on Second CH-54 Fatigue Specimen.

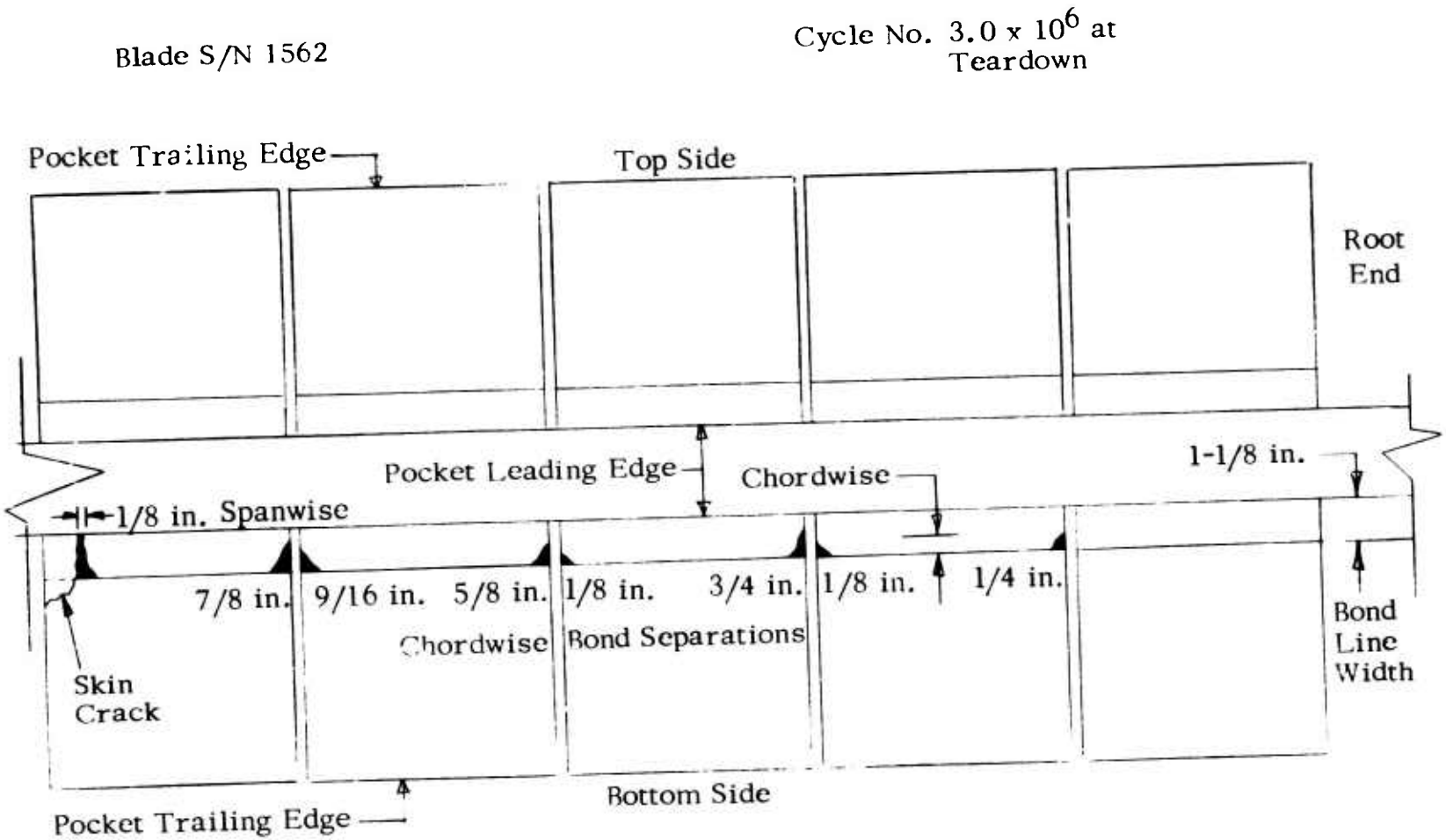

Figure 72. Pocket-to-Spar Bond Separations After 3.0×10^6 Cycles at Third Load Level on Second CH-54 Fatigue Specimen.

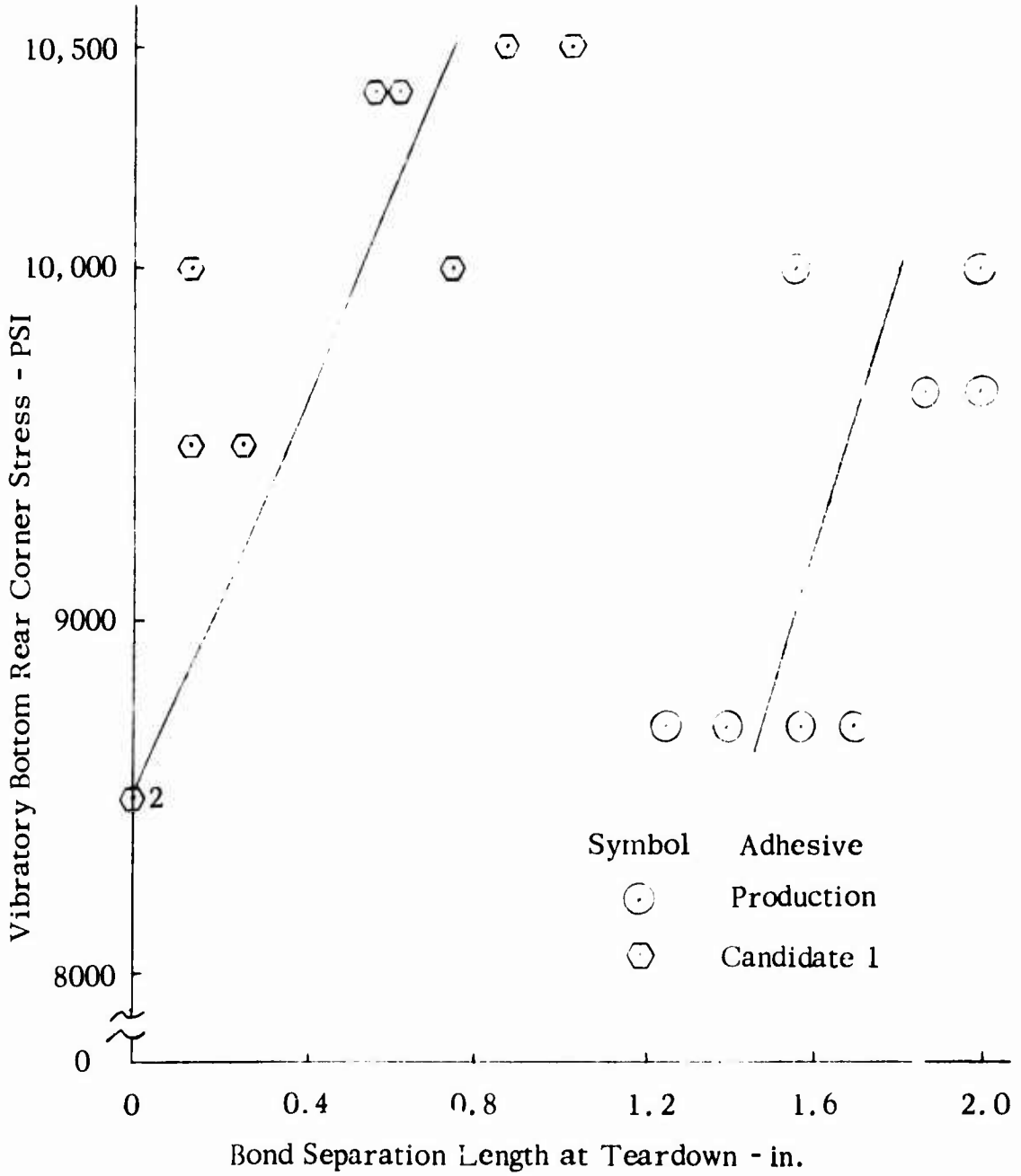

Figure 73. Selected Adhesive Bond Separations on Second CH-54 Fatigue Specimen at Teardown; Total Cycles 9.0×10^6.

between the selected adhesive in the second test specimen and the production nitrite-phenolic adhesive after 3.0×10^6 cycles.

The third specimen was a repeat of the first specimen; the bungee fixture was used to bond on three universal pockets and the air bag to bond on two. The bond line pattern was the same as the previous two specimens, and as in the first two specimens, no pocket-to-spar bond separations occurred until the specimen had accumulated 0.5×10^6 cycles at the third and highest load level. The separations gradually increased, and Figure 74 indicates the bond separations at teardown after 3.5×10^6 cycles. This specimen was tested for an additional 0.5×10^6 cycles at the third and highest load level to accumulate the cycles missing from the first specimen that failed. Figure 75 is a bond separation comparison between the selected adhesive in this test and the nitrite-phenolic adhesive used in production after 3.5×10^6 cycles.

Figure 76 is a plot of the 30 pocket corner separations in the pocket-to-spar bond on the 3 fatigue specimens (no separations occur on the top side) and the 8 typical data points for the nitrite-phenolic adhesive used in production. The selected room temperature curing adhesive compared favorably with the production adhesive under fatigue loading.

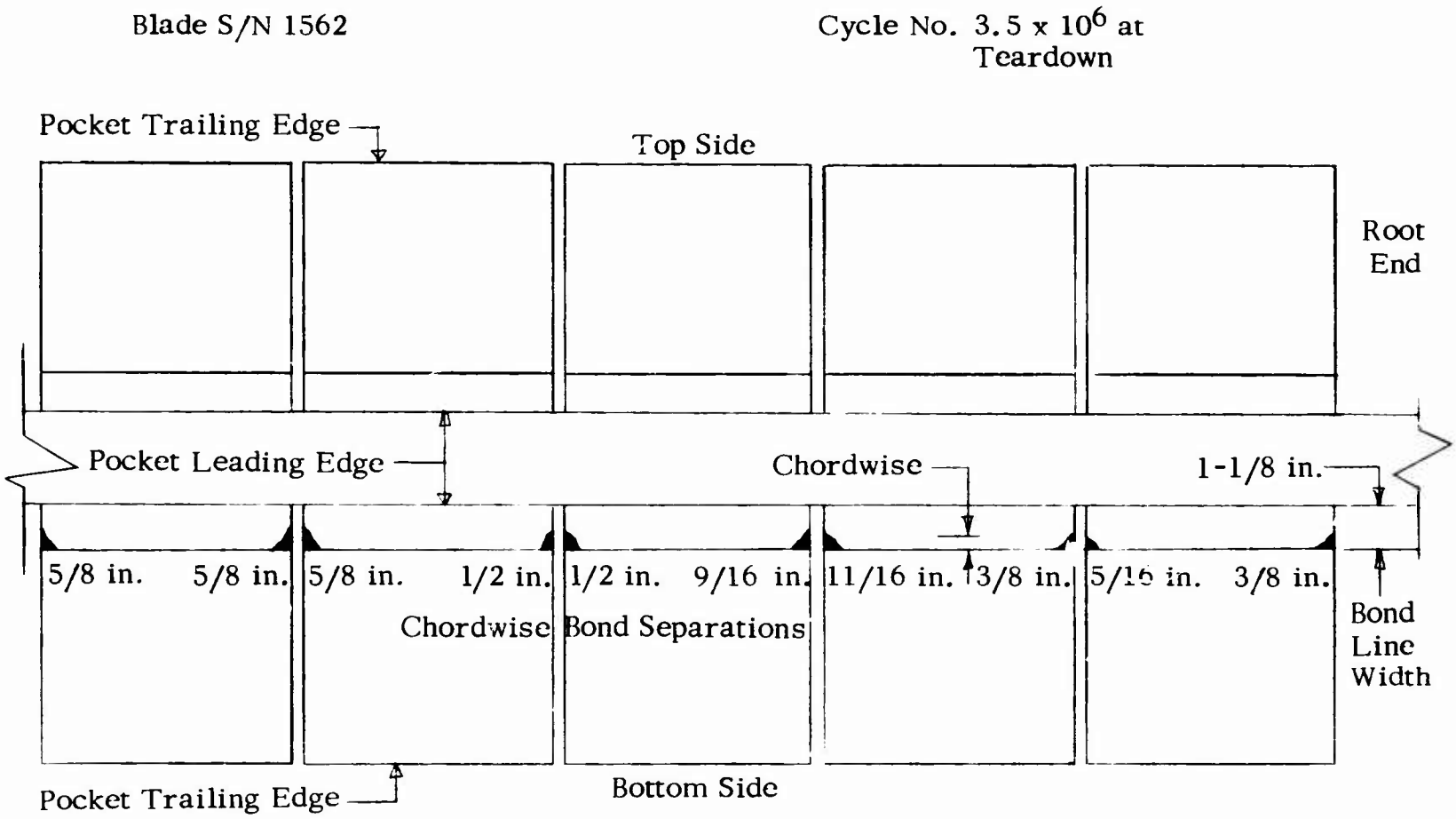

Figure 74. Pocket-to-Spar Bond Separations After 3.5×10^6 Cycles at Third Load Level on Third CH-54 Fatigue Specimen.

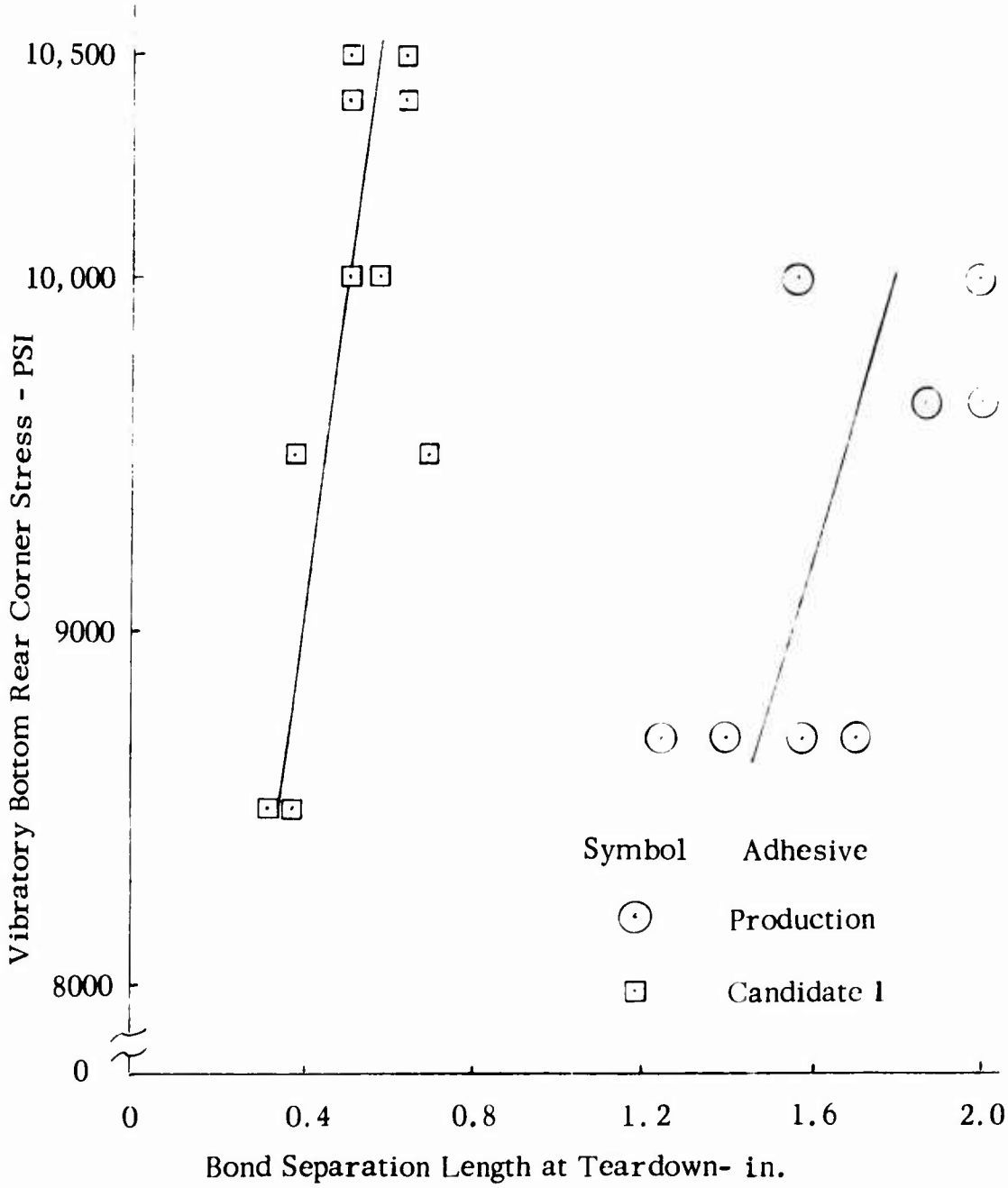

Figure 75. Selected Adhesive Bond Separations on Third CH-54 Fatigue Specimens at Teardown; Total Cycles 9.5×10^6.

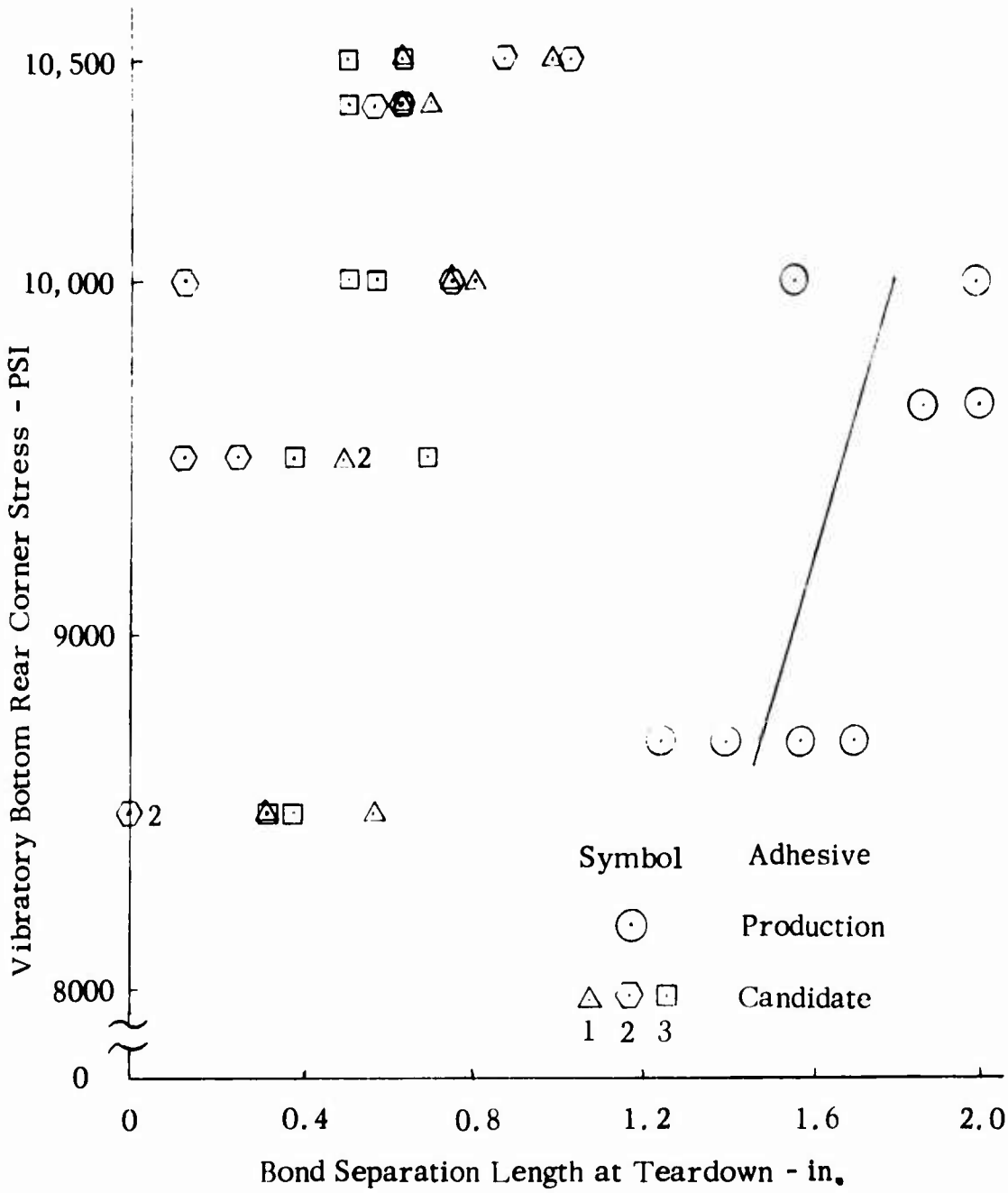

Figure 76. Selected Adhesive Bond Separations Vs. Production Adhesive.

COST COMPARISON

The difference in cost between repairing the current CH-54 helicopter main rotor blade using factory support and the candidate main rotor blade with field-replaceable pockets was determined.

The cost comparison is based on two sources of information: (1) Sikorsky's repair data for CH-54A rotor blades for the years 1969 and 1971 and (2) 89 field discrepancy reports for the same period. CH-54A data was used since there is insufficient field experience data available for the newer CH-54B blade.

1. The annual average number of blades repaired at the contractor's overhaul and repair facility is 77 blades based on Sikorsky repair data.

2. The annual average number of blades that could have remained in service had field-replaceable pockets been available, based on 89 field discrepancy reports and Sikorsky repair data, is 20 blades.

   Type and frequency of damage causing blade return based on 89 field discrepancy reports:
   - 24% for pocket damage
   - 24% for abrasion strip damage
   - 52% for all other damage

3.a. The average number of pockets replaced per blade in the contractor's repair facility is 4.

   3 pockets (average) were replaced per blade at Sikorsky O&R in 1969.
   5 pockets (average) were replaced per blade at Sikorsky O&R in 1970.
   4 pockets (average) were replaced per blade at Sikorsky O&R in 1971.

   The average number of pockets replaced in 3 years is 4 pockets per year. The number of pockets required per year in the field to effect pocket repairs is therefore equal to 4 (20), or 80 pockets.

3.b. The average number of pockets required per year to supply the Army's inventory with a 90% confidence is 95 pockets.

4.a. The following identifies pockets that were replaced by frequency of occurrence and blade location (pocket number).**

Pocket	% Replaced	Pocket	% Replaced
1	16%	15	23%
2	16%	16	16%
3	9%	17	15%
4	12%	18	11%
5	10%	19	17%
6	10%	20	12%
7	8%	21	11%
8	12%	22	14%
9	11%	23	29%
10	10%	24	24%
11	10%	25	22%
12	9%	26	19%
13	11%	27	20%
14	15%		

** Currently, a main blade abrasion strip replacement automatically requires the removal of four pockets because of the bonding tools clamping arrangement to the spar. In this report, this automatic pocket removal has not been considered. Only pockets necessitating replacement due to field damage have been considered.

4.b.

Cost of one field jigging fixture, bungee type 6405-15011	$200.00
Cost of one pocket kit; including pocket, shims, spars, adhesive, cleaning solvents, etc.	$165.00
Man-hours to replace one pocket	2

4.c.1. No change in maintenance man-hours per flight hour at the organizational level of maintenance is anticipated. An increase of approximately .008 maintenance man-hours per flight hour is anticipated at the direct support level of maintenance.

$$\frac{\text{160 hrs. to replace 80 pockets}}{\text{19,229 flight hours}} = .008$$

(19,229 hrs = average flight hours per year)

4.c.2. Aircraft availability should improve due to reductions in downtime related to lack of spare blades. A quantitative estimate of this parameter cannot be determined.

4.c.3. I. Cost Per Flight Hour For Sikorsky Factory Pocket Replacement

(1)$	70.00	per blade, preparation for shipment to CONUS
$	78.00	per blade, surface shipping to CONUS (8,000 mi.)
$	400.00	per blade, shipping container
$	108.40(1)*	per blade, shipping from the West Coast to Sikorsky
$	1786.00(2)*	per blade, repair charge at Sikorsky
$	108.40	per blade, shipping from Sikorsky to West Coast
$	303.00	per blade, air shipping 8,000 mi.
$	2853.80	TOTAL COST of a blade returned to Sikorsky factory

NOTE: *(1) Shipping cost by truck is $13.55 per 100 lb with a 10,000-lb minimum. Blade and container weigh 800 lb.
*(2) Repair cost is 1971-1972 negotiated contract price for repairing one CH-54A/B blade.

(2) Average of 77 blades per year returned over the last 3 years = 77 ($2853.80) = $219,742.60 per year.

(3) Average of 97 spare blades per year purchased over the last 3 years = 97 ($13,075 per blade) = $1,268,275.

(4) Total blade cost per year

$1,268,275.00	-	Spare blades
$ 219,742.60	-	Repair cost
$1,488,017.60		

(5) Average flight hours per year = 19,229.

(6) Cost per flight hour for factory replacement.

$$\frac{\$1,488,017.60}{19,229} = \underline{\$77.33}$$

II. Cost Per Flight Hour With Field-Replaceable Pocket

(1) $ 8.00 per pocket-military labor for pocket replacement (2.0 hrs @ $4 per hr)
$ 165.00 per pocket - kit
$ 173.00 TOTAL cost per pocket

(2) Average of 80 pockets replaced per year in field = 80 ($173.00)(20 blades per year x 4 pockets/blade) = $13,840.00
36 field jigging kits required = 36 ($200.00) (assuming six kits at six different bases) = $ 7,200.00
Shipping cost of pocket for 8,000 mi. = 80 ($1.16) = $ 92.80
Backup spare pocket inventory of 15 pockets = 15 ($165.00) = $ 2,475.00
Shipping cost of spare pockets = 15 ($1.16) = $ 17.40
TOTAL COST per year for field pocket replacement $23,625.20

(3) An average of 97 spare blades per year has been purchased over the last 3 years, but with field-replaceable pockets only an average of 77 spare blades per year would be required = 77 ($13,075) = $1,006,775.00

(4) An average of 77 blades per year has been returned for the last 3 years for repair at the contractor's facility, but with field-replaceable pockets only an average of 57 blades per year would be repaired at Sikorsky Aircraft = 57 ($2,853.80) = $162,666.60

(5) Total blade cost per year with field-replaceable pockets

$	23,625.20	Pocket cost
$	1,006,775.00	Spare blades cost
$	162,666.00	Repair cost
$	1,193,066.80	

(6) Average flight hours per year = 19, 229

(7) Cost per flight hour with field-replaceable pockets

$$\frac{\$1,193,066.80}{19,229} = \underline{\$62.04}$$

4.c.4. Cost per year:

Cost per year for Sikorsky factory replacement	= $1,488,017.60
Cost per year with field-replaceable pocket	= $1,193,066.80
Savings per year using field-replaceable pockets	= $ 294,950.80

CONCLUSIONS

It is concluded that this study was highly successful based on the following accomplishments:

(1) A universal rotor blade pocket was designed that could be adhesively bonded in any of 27 of the 28 spanwise positions on the blade spar. These pockets were proof load tested, and their strength was found to exceed structural requirements. Their aerodynamic contour was checked after being bonded to the blade spar, and the small variations noted are expected to produce no discernible effect on the aerodynamic behavior of the rotor blade.

(2) Candidate 1 adhesive was selected because it had adequate structural strength between -67°F and +180°F when assembled under the three climatic conditions of 40°F and 20% RH, 75°F and 50% RH and 100°F and 85% RH. Its resistance to fatigue was comparable to the adhesive used in production blades, and it is considered an adequate substitute for bonding field-replaceable pockets by Army maintenance personnel.

(3) A lightweight (5 pounds) field jigging kit was designed for positioning and applying pressure to the pocket during the bonding of pockets to the spar and is easily positioned on the blade by one man.

(4) A cost comparison was conducted between repairing the current CH-54 helicopter main rotor blades using factory support and the candidate main rotor blade with field-replaceable pockets. Based on Sikorsky repair data for the years 1969 through 1971, a significant savings of approximately $300,000 per year can be realized when field-replaceable pockets are incorporated into the Army inventory.

LITERATURE CITED

1. AERONAUTICAL REQUIREMENTS, AR-56, February 1970, Naval Air Systems Command, Department of the Navy, Superseding MIL-S-8698, July 1954.

2. Garrick, I. E. NATIONAL ADVISORY COMMITTEE FOR AERONAUTICS, Report No. 465, Langley Memorial Laboratory, 1933.

3. D. S., G. S. AND DEPOT MAINTENANCE MANUAL, CH-54B HELICOPTER TM55-1520-217-35/1 & 2, Chapter 18, Section II, Department of the Army Technical Manual, January 1970.

GLOSSARY

Bond separation	Opening in the adhesive between the pocket and spar.
Caul plate	A means of distributing pressure over a large area.
Contour template	Sheet metal cutout that very accurately describes the airfoil shape.
Feeler gage	Thickness measuring tool.
Leading edge	The front portion of the airfoil.
Pocket-to-spar	That portion of the spar and individual pockets that are coated with adhesive and mated together to form the blade airfoil.
Rib-to-skin	That portion of the skin and individual ribs that are coated with adhesive and mated together to form the pocket.
Spar	A hollow, "D" shaped, aluminum extrusion that forms the main structural member of the blade.
Spar backwall steps	Change in the backwall thickness of the spar accomplished in steps rather than taper. Like the sidewall taper, it is used to minimize blade weight.
Spar sidewall taper	Change in tip-to-root thickness of the hollow spar wall changing from a heavy wall thickness at the root end to a thin wall thickness at the tip end. This is done to minimize blade weight.
Trailing edge	The aft portion of the airfoil, i.e., the rear end of the blade.
Universal pocket	The trailing-edge airfoil section of a blade that will fit any 27 of the 28 spanwise positions of the blade spar.

Whiffletree	A test loading apparatus where one concentrated load is distributed over a large area in a specific manner.