AD-758 659

IN SITU MEASUREMENT OF SEDIMENT SOUND SPEED DURING CORING

Donald J. Shirley, et al

Texas University

Prepared for:

Office of Naval Research

14 March 1973

DISTRIBUTED BY:

NTIS

National Technical Information Service
U. S. DEPARTMENT OF COMMERCE
5285 Port Royal Road, Springfield Va. 22151

AD 758659

THE UNIVERSITY OF TEXAS AT AUSTIN

ARL-TR-73-1

Copy No. 29

14 March 1973

IN SITU MEASUREMENT OF SEDIMENT SOUND SPEED DURING CORING

FINAL REPORT UNDER CONTRACT N00014-70-A-0166-0005

15 April 1971 - 14 March 1973

Donald J. Shirley
Aubrey L. Anderson
Loyd D. Hampton

Office of Naval Research
Contract N00014-70-A-0166-0005
NR 291-050

DDC
RECEIVED
APR 20 1973
B

Reproduced by
NATIONAL TECHNICAL
INFORMATION SERVICE
U S Department of Commerce
Springfield VA 22151

APPROVED FOR PUBLIC
RELEASE, DISTRIBUTION
UNLIMITED.

56

ARL-TR-73-1
14 March 1973

IN SITU MEASUREMENT OF SEDIMENT SOUND SPEED DURING CORING

FINAL REPORT UNDER CONTRACT N00014-70-A-0166-0005
15 April 1971 - 14 March 1973

Donald J. Shirley
Aubrey L. Anderson
Loyd D. Hampton

Office of Naval Research
Contract N00014-70-A-0166-0005
NR 291-050

APPROVED FOR PUBLIC
RELEASE, DISTRIBUTION
UNLIMITED

APPLIED RESEARCH LABORATORIES
THE UNIVERSITY OF TEXAS AT AUSTIN
AUSTIN, TEXAS 78712

UNCLASSIFIED
Security Classification

DOCUMENT CONTROL DATA - R & D

(Security classification of title, body of abstract and indexing annotation must be entered when the overall report is classified)

1. ORIGINATING ACTIVITY (Corporate author) Applied Research Laboratories The University of Texas at Austin Austin, Texas 78712	2a. REPORT SECURITY CLASSIFICATION UNCLASSIFIED

3. REPORT TITLE
IN SITU MEASUREMENT OF SEDIMENT SOUND SPEED DURING CORING

4. DESCRIPTIVE NOTES (Type of report and inclusive dates)
Final report

5. AUTHOR(S) (First name, middle initial, last name)
Donald J. Shirley, Aubrey L. Anderson, Loyd D. Hampton

6. REPORT DATE 14 March 1973	7a. TOTAL NO. OF PAGES 85	7b. NO. OF REFS 6
8a. CONTRACT OR GRANT NO. N00014-70-A-0166-0005 b. PROJECT NO.	9a. ORIGINATOR'S REPORT NUMBER(S) ARL-TR-73-1	
c. d.	9b. OTHER REPORT NO(S) (Any other numbers that may be assigned this report) ---	

10. DISTRIBUTION STATEMENT
Approved for public release; distribution unlimited.

11. SUPPLEMENTARY NOTES Scientific Officer, Code 463, 202-692-4413	12. SPONSORING MILITARY ACTIVITY Office of Naval Research Department of the Navy Washington, D. C. 20360

13. ABSTRACT

A system has been developed for attachment to sediment corers to obtain an in situ sound speed profile during a coring operation. The system uses two electroacoustic transducers mounted in the cutting head of the corer and associated electronic circuitry to measure the travel time of an acoustic pulse traversing the diameter of the sediment core. Laboratory and field tests which demonstrate the capabilities of the measurement technique are reported. Results show accurate in situ sound speed values as well as sound speed variations which have high correlation with sediment lithology. Sound speed profiles were obtained in the Gulf of Mexico using a piston corer and in coastal waters using a special shallow water coring rig. Limited examination of the feasibility of measuring acoustic attenuation and volume scattering is also reported. The conclusion is that these measurements should be incorporated in the sound speed measurement technique reported here. (U)

DD FORM 1 NOV 65 1473 (PAGE 1)
S/N 0101-807-6801

UNCLASSIFIED
Security Classification

UNCLASSIFIED
Security Classification

14 KEY WORDS	LINK A ROLE	LINK A WT	LINK B ROLE	LINK B WT	LINK C ROLE	LINK C WT
Acoustic velocity						
Sediments						
Bottom coring						
In situ sound speed						

DD FORM 1 NOV 65 1473 (BACK)
(PAGE 2)

iii

UNCLASSIFIED
Security Classification

TABLE OF CONTENTS

	Page
ABSTRACT	iii
LIST OF ILLUSTRATIONS	vii
INTRODUCTION	1
SYSTEM DESCRIPTION	3
EXPERIMENTAL RESULTS	11
DISCUSSION AND CONCLUSION	35
RECOMMENDATIONS	37
REFERENCES	39
APPENDIX A	41
CIRCUIT DIAGRAMS	41
APPENDIX B	53
EXAMINATION OF ACCURACY LIMITS OF THE PROFILOMETER	53
I. Error Due to Thermal Expansion of Cutter Head	53
II. Error Due to Ramp Nonlinearity	56
APPENDIX C	63
GEOLOGICAL DESCRIPTION OF CORES	63

Preceding page blank

LIST OF ILLUSTRATIONS

Figure Number	Description	Page
1	Cross Section of Ocean Bottom Corer with Profilometer Transducers Installed	5
2	Cutting Head with Transducer Modifications	6
3	System Block Diagram	7
4	Transducer Arrangement for Core Liner Sound Speed Measurement	10
5	Sound Speed in Graduated Sediment	12
6	Sound Speed Profiles and Accelerometer Outputs for Two Cores in the Gulf of Mexico, November 1971	16
7	Sound Speed Profiles, Core 1, Baffin Bay, August 1972	19
8	On Deck Sound Speed and Attenuation Profiles, Core 23, Baffin Bay, August 1972	21
9	Correlation of Lithologies and Sound Speed Profiles of Cores from Baffin Bay, November 1971	23
10	Correlation of Lithologies and Sound Speed Profiles of Cores 1, 2 and 3, Baffin Bay, August 1972	24
11	In Situ Sound Speed Profiles for Fifteen Cores from Baffin Bay, August 1972	26
12	Photograph of Middle of Cores 1 and 2 from Baffin Bay, August 1972	28
13	Photograph of Bottom of Cores 1 and 2 from Baffin Bay, August 1972	28
14	Correlation of Lithologies and Sound Speed Profiles, Cores 22 and 23, Baffin Bay, August 1972	30
15	Correlation of Lithology and Sound Speed Profile, Core 2, Redfish Bay, May 1972	32

Preceding page blank

LIST OF ILLUSTRATIONS (Cont'd)

APPENDIX A

Figure Number	Description	Page
	Pulse Timing Generator and Oscillator Schematic	43
	Transmit Signal Gate Schematic	44
	Power Amplifier Schematic	45
	Delay Pulse Generator Schematic	46
	Line Driver Preamp and Filter Schematic	47
	AGC Amplifier Schematic	48
	Time Delay to Voltage Converter Schematic	49
	AGC Amplifier Block Diagram	50
	Time Delay to Voltage Converter Block Diagram	51
	Time Delay to Voltage Converter Timing Diagram	52

APPENDIX B

B1	Sound Speed versus Voltage out of Sound Speed Profilometer	58

APPENDIX C

Core 1, Baffin Bay, August 1972	Sheet 1	(AS-73-154)	65
	Sheet 2	(AS-73-155)	66
	Sheet 3	(AS-73-156)	67
Core 2, Baffin Bay, August 1972	Sheet 1	(AS-73-157)	68
	Sheet 2	(AS-73-158)	69
	Sheet 3	(AS-73-159)	70
Core 3, Baffin Bay, August 1972	Sheet 1	(AS-73-160)	71
	Sheet 2	(AS-73-161)	72
	Sheet 3	(AS-73-162)	73

LIST OF ILLUSTRATIONS (Cont'd)

APPENDIX C

			Page
Core 22, Baffin Bay, August 1972	Sheet 1	(AS-73-163)	74
	Sheet 2	(AS-73-164)	75
	Sheet 3	(AS-73-165)	76
	Sheet 4	(AS-73-166)	77
Core 23, Baffin Bay, August 1972	Sheet 1	(AS-75-167)	78
	Sheet 2	(AS-73-168)	79
	Sheet 3	(AS-73-169)	80
	Sheet 4	(AS-73-170)	81
Core 2, Redfish Bay, May 1971	Sheet 1	(AS-73-171)	82
	Sheet 2	(AS-73-172)	83

INTRODUCTION

One of the more useful tools that an oceanographer has at his disposal is the sediment corer. For deep ocean work, the gravity corer or piston corer is used whereas for shallow water (20 m or less) a small corer operated either by a diver or from the surface is used. Whichever type is used, the tool allows a vertical section of unconsolidated bottom sediments to be brought to the surface for analysis and testing. The determination of sound speed in bottom sediments is of interest at this time because of the range of applications of underwater acoustics. Because of changes in pressure, temperature, and mechanical properties of the sediment caused by removal of the core from the bottom and its transport to the laboratory, this one property of sediments lends itself least to in-lab determination. Consequently, efforts have been made to measure sediment acoustic properties in situ. For example, Hamilton (1963) reported the determination of sediment sound speeds in situ by attaching acoustic probes to the underwater vehicle TRIESTE and using this vehicle to position the probes in the bottom. Berin and Clay (1967) reported the development of a free fall vehicle which would insert acoustic probes and a short corer into the bottom and, after recording data, ascend to the surface leaving the weighted section on the bottom. Lewis, Nacci, and Gallagher (1970) reported development of yet another ocean bottom vehicle, this one consisting of a platform to be lowered to the ocean bottom, and containing acoustic probes and a corer to be driven into the bottom by electric motors, the whole package being retrieved from the surface after recording data. These are but examples of the many approaches that can be and have been made in determining acoustic properties in situ. These various approaches have several drawbacks, the main one being that they are limited to rather shallow penetration of the ocean bottom. It would be desirable to have in situ acoustic

data to at least the same depth that one could core. This report describes a system for attachment to existing coring tools to obtain the sound speed profiles as the corer penetrates the bottom.

SYSTEM DESCRIPTION

The sound speed profilometer consists of two piezoelectric transducers mounted in the cutting head of the coring device and connected by means of an electrical cable to the associated electronic circuitry. A pulse of acoustic energy is generated by the transmit transducer and projected across the sediment contained in the cutting head at that instant. The sound pulse is received and converted to an analog electrical signal by the receive transducer. Electronic circuitry associated with the receiver measures the time required for the pulse to traverse the sediment and a voltage output is generated which is linearly proportional to this time and is consequently proportional to the acoustic velocity being measured.

A nominal carrier frequency of 190 kHz was chosen as a compromise between attenuation and timing accuracy. Attenuation by scattering and absorption in the sediment decreases with decreasing frequency but the accuracy with which the leading edge of a pulse can be measured also decreases.

When used with a 3 in. diam corer, the pulse repetition rate of the system is limited to about 200 pulses per second because of reverberation inside the cutter head when the attenuation is low (such as when only water is in the head). This repetition rate gave a spacing between measurements of about every 2 in. (5 cm) when the technique was used to obtain a 30 ft (9 m) penetration with a piston corer. Total penetration time was slightly less than 1 sec. For the frequency selected, transducer separation must be at least 2.5 in. (6.4 cm) so as to eliminate overlap between the transmit

and receive electrical signals (there is some feedover because of the close proximity of the elements). This necessitates the present system being used on the larger type coring tools. However, an increase in frequency with corresponding decrease in pulse length could be effected for use on smaller diameter tools.

The transducer arrangement is designed to be fitted on existing coring tools by minor modification of the cutting head. Figure 1 shows a schematic cross section of the installation. In practice, the transducer elements are not cemented directly into the cutter, but are encapsulated in separate metal holders which fit through diametrically opposite holes in the cutter and are fastened to it with screws. Figure 2 shows photographs of a typical installation. The transducer elements are piezoelectric ceramic discs 1/2 in. (1.3 cm) diam cut to resonate at 190 kHz in the thickness mode. All elements are identical and interchangeable in case one is damaged.

Signals to and from the transducers are conducted through coaxial cable taped to the outside of the core barrel to a junction box mounted to the top end of the corer. The junction box contains a line driver preamplifier for the receive transducer and an accelerometer to measure deceleration of the corer as it impacts the bottom. The output of the accelerometer can be integrated twice to provide depth of penetration versus time, for the sound speed profile. Connection from the junction box to the surface is made by a cable containing three coaxial pairs.

Figure 3 shows a block diagram of the electronic system. The system consists of two basic sections, one to generate a pulsed sine wave with controlled phase at the proper frequency to drive the projector transducer, and the other to amplify the received signal, filter it to remove unwanted noise, and measure the time delay between transmission and reception.

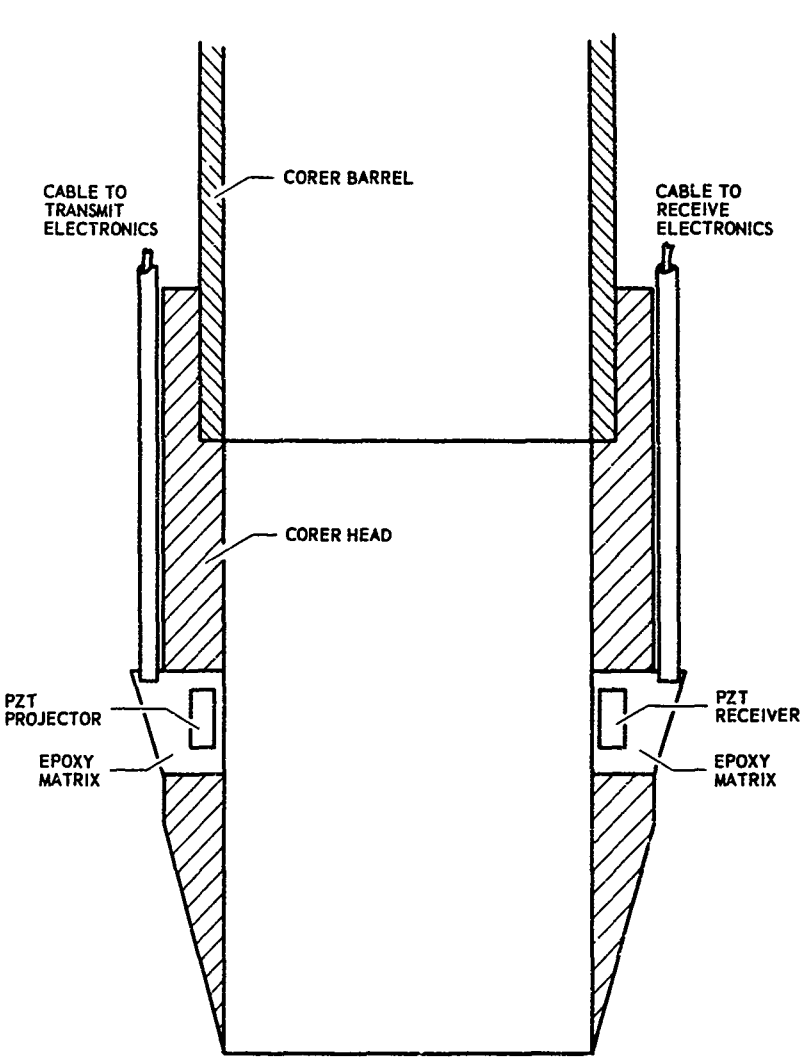

FIGURE 1
CROSS SECTION OF OCEAN BOTTOM CORER WITH PROFILOMETER TRANSDUCERS INSTALLED

ARL - UT
AS-71-790
LDH - RFO
7 - 8 - 71

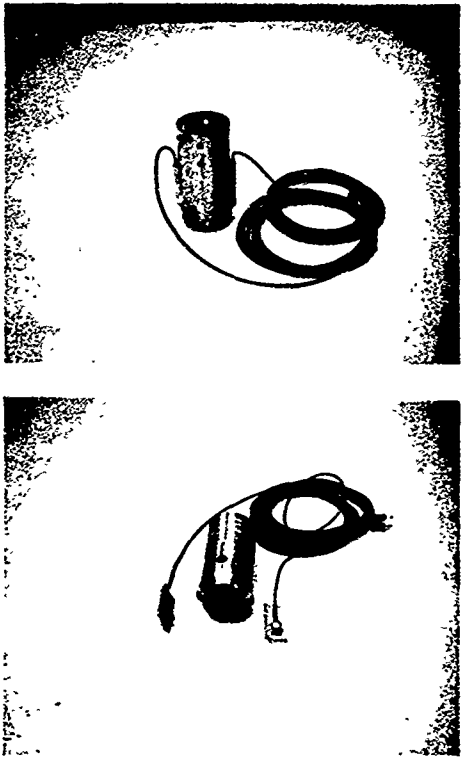

FIGURE 2
CUTTING HEAD WITH TRANSDUCER MODIFICATIONS

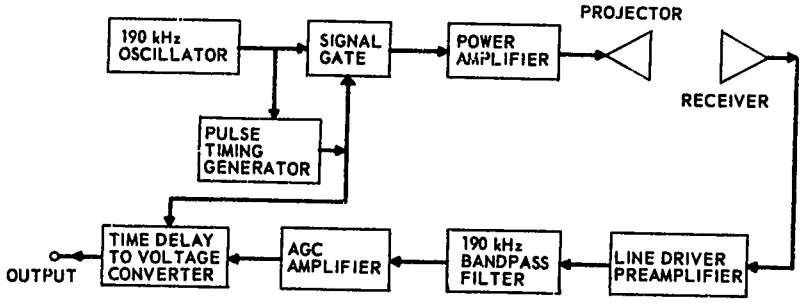

FIGURE 3
SYSTEM BLOCK DIAGRAM

The transmit section contains a 190 kHz sine wave oscillator which provides a cw signal to a signal gate and to the pulse timing circuitry. The pulse timing circuit output is a square pulse at the proper repetition rate whose leading and trailing edges are coincident with a positive going zero crossing of the oscillator sine wave. The square pulse is used to open and close the electronic signal gate to provide a coherent sine pulse to the power amplifier. The power amplifier drives the projector transducer with about 15 W of power.

On the receive side, the line driver preamplifier amplifies the signal from the receive transducer 3 dB and transforms the high impedance of the transducer to a low impedance to drive the long coaxial cable to the surface. This preamplifier receives power and transmits its signal on the same coaxial pair. At the surface, the signal is bandpass filtered and sent to an AGC amplifier. The AGC amplifier maintains the incoming signal at about 0.1 V rms over a 15 dB range of input signal variation. The signal then goes to the time delay to voltage converter, which consists of a Miller integrator circuit which is turned on by the transmit pulse and turned off by the received pulse. The circuit integrates a constant voltage so the output is a linear ramp whose length is dependent upon the time delay between pulses. The integrator is followed by two sample and hold circuits, one sampling and holding the maximum voltage the ramp reaches, the other sampling the output of the first after it starts to hold. The result is a voltage output linearly dependent on the time delay between pulses. Circuit diagrams, system block diagrams, and waveform diagrams are included in Appendix A. System accuracy is controlled by the stability of the electronic circuitry and by mechanical stability. A measurement of system accuracy with respect to temperature of the sampled medium is discussed in Appendix B.

All circuits are implemented with printed circuit techniques and with integrated circuits where possible so that the whole

electronics package requires about 800 cm^3 of space exclusive of power supply and recording instrumentation. This volume is not an absolute minimum since further space would be saved through refinement of circuit construction.

One other piece of equipment was designed and built to use in conjunction with the system. In some instances it might be desirable to have a fast check of the profile after the core has been brought to the surface and is still contained in the plastic liner. A set of transducers were mounted on a frame that could be moved along the length of the core and these could be substituted directly for the cutting head transducers in the electronic system. Thus, a profile could be recorded for comparison with the in situ measurement. Figure 4 shows a picture of this unit with a typical core in its liner.

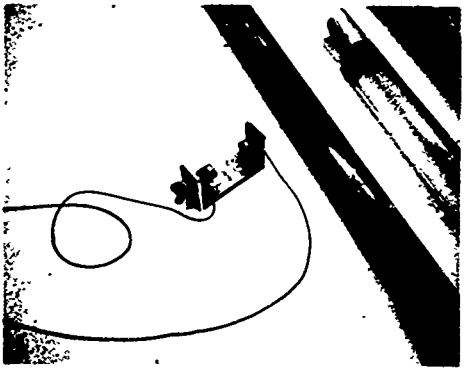

FIGURE 4

TRANSDUCER ARRANGEMENT FOR
CORE LINER VELOCITY MEASUREMENTS

EXPERIMENTAL RESULTS

The feasibility of using the sound speed profilometer was first confirmed by preliminary testing under controlled conditions in the laboratory. Figure 5 shows for comparison two sound speed profiles of a 1 ft (0.3 m) layer of sediment in a test tank. The profile labeled probe measurement was made using three probes (one projector and two receivers at different distances) lowered incrementally into the sediment. Time delay between the two received pulses was measured with an interval timer and the sound speed calculated. The profile labeled dynamic measurement is a plot of the sound speed calculated from the voltage output of the electronic circuitry as the coring head was penetrating the sediment after free fall from a height of 4 ft (1.2 m).

The sediment for which sound speed is shown in Fig. 5 was sampled by coring with a 1 1/4 in. (3.2 cm) diam tube. Subsamples of these core samples were analyzed for porosity. The results are summarized in Table I.

TABLE I

WATER CONTENT, POROSITY, AND SOUND SPEED PROFILE OF LABORATORY SEDIMENT

Sediment Depth Interval (in.)	Sediment Depth Interval (cm)	Water Content (% of Day Weight)	Porosity (%)	Sound Speed from Akal (1972) (m/sec)
1 - 2 1/4	2.5 - 5.7	102.2	73.0	1466
2 1/4 - 4	5.7 - 10	62.6	62.4	1490
4 - 6	10 - 15	37.3	49.7	1564
6 - 8	15 - 20	33.6	47.1	1584
8 - 10	20 - 25	32.2	46.0	1593

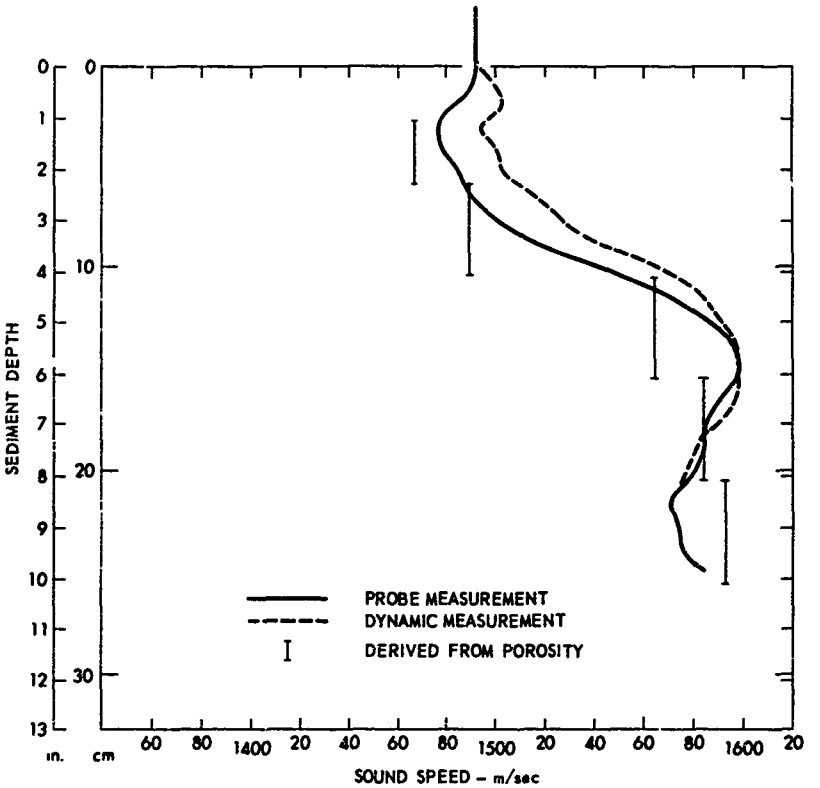

FIGURE 5
SOUND SPEED IN GRADUATED SEDIMENT
T = 23° C

ARL - UT
AS-71-799
LDH - RFO
7 - 8 - 71

Akal (1972) has summarized the relationship between porosity and relative sound speed (ratio of sediment sound speed to water sound speed) which is shown by more than 450 marine sediment cores, based on data drawn from numerous authors. He fitted a second order equation to these data and presents a graph of the resulting curve. This curve was used to determine the values of sound speed shown in Table I for the measured porosities. These values are shown in Fig. 5 for comparison with the measurement sound speeds. The absolute values of the measured sound speeds are well within the bounds of the observed sound speeds reported by Akal (about ±75 m/sec). The agreement in shape among the three curves is quite good.

After these promising results in the laboratory, a series of field tests were made. The chronology and location of these tests are indicated below:

2-3 August 1971, Gulf of Mexico, with TAMU aboard RV ORCA

5-11 November 1971, Gulf of Mexico, Mississippi Delta, with TAMU aboard RV ALAMINOS

22-23 November 1971, Baffin Bay, Texas, using UT/MSI coring barge

9-10 May 1972, Redfish Bay, using UT/MSI coring barge

8-9 June 1972, Massachusetts Bay, with WHOI aboard RV KNORR

15-16 August 1972, Baffin Bay, Texas, using UT/MSI coring barge

The first three trips and the laboratory sound speed measurements occurred during the 1971 contract; however, data analysis was completed during this contract period and is reported here for the first time. Sediment sound speed data were successfully obtained on all but two of these field trips. This report includes data from each of the successful field trips. On both the ORCA and the KNORR trips, there were difficulties which prevented data acquisition. In both cases the difficulties were associated with cabling.

For the ORCA trip, the electrical cable connecting the profilometer with the surface was a single 5-conductor shielded cable. Laboratory tests had indicated that this type of cable could be used, but it did require a reduced drive level to minimize electrical feedover between the transmit and receive lines. To compensate for the reduced drive level, the receiver gain was increased. Although the system performed well in this configuration in the laboratory, it was too susceptible to noise generated by the transducers entering the sediment, and no data were obtained on the ORCA trip. The surface cable was changed to three separately shielded lines for subsequent operations.

For the KNORR trip, the profilometer was mounted on the Woods Hole Oceanographic Institution's large piston corer ("giant corer"). This corer is constructed of threaded pipe sections about 8 ft (2.4 m) long which are joined by threaded collars. The topmost pipe section screws into the weight stand. In accordance with the instructions of WHOI personnel, the junction box of the profilometer was attached to the upper coring tube section and the cable joining the junction box and cutter head (transducers) was taped along the coring tube. The signal cable to the surface was then firmly attached to the weight stand. When the corer was lifted into the water, the top section of the coring tube rotated about 180° relative to the weight stand. This action pulled the profilometer surface cable out of the stuffing tube in the junction box, flooding the junction box with sea water, which shorted the line drive amplifier and prevented data acquisition.

To allow dynamic field testing of the profilometer in locations near ARL, some effort was made to modify a surplus winch for use on an ARL platform. The short corer, which had been used to acquire the data shown in Fig. 5, was also modified by the addition of fins and weights to allow its use as a gravity corer. This system, including the profilometer, was tested in the center of lower

Lake Travis, where it was known that several feet of sediment had accumulated. Although cores were successfully obtained, sound speed data were not. The cores revealed that gas bubbles were present in large quantity throughout the sediment. The large attenuations in this gassy sediment were outside the range of control of the profilometer AGC circuit. Probing sediments in other nearby lakes also revealed prohibitive gas contents.

Data were successfully acquired on the remaining field trips. Sound speed measurements were made dynamically with a piston corer (from RV ALAMINOS) and quasidynamically with a corer which was pushed into the sediment by block and tackle (Baffin Bay and Redfish Bay).

Figure 6 shows sound speed profiles obtained aboard RV ALAMINOS on station off the Mississippi delta in the Gulf of Mexico. Both profiles were obtained in approximately 30 fathoms (55 m) of water. The top trace in each profile, which is labeled accelerometer, is the unintegrated output of the accelerometer attached to the coring tool. Both cores were taken in rather soft uniform sediment and show no distinct layered structure. The point of impact with the sediment-water interface is to the right and both show a decrease in sound speed as this point is reached. Total length of the first core was 30 ft (9 m) and of the second 38 ft (11.5 m). The soft nature of the sediment at Drop 2 is illustrated by the small changes in accelerometer output and by the 38 ft (11.5 m) penetration which exceeded the length of the coring barrel. The bottom of the core could not be determined from the accelerometer trace.

The average water content (Table II) was used to determine an average porosity of about 68% for Core 1 and 66% for Core 2. The maximum porosity in either core was 75% (at the top of Core 2) and the minimum was 59%. According to Akal (1972), these porosity values are in the range where sound speed is almost constant as porosity

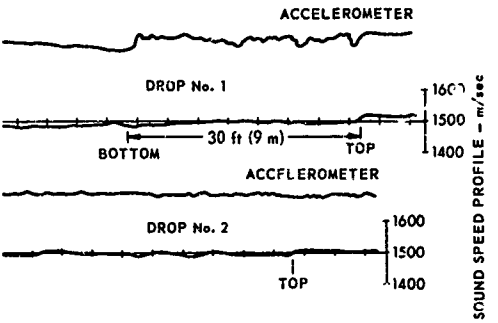

FIGURE 6
SOUND SPEED PROFILES AND ACCELEROMETER OUTPUTS
FOR TWO CORES IN THE GULF OF MEXICO
NOVEMBER 1971
HORIZONTAL SCALE. 0.1 sec/div
PROFILE VERTICAL SCALE: 100 m/sec/div

ARL - UT
AS-72-28
LDH - DR
1 - 12 - 72

TABLE II

GRAIN SIZE AND WATER CONTENT OF UPPER PORTION
OF CORES 1 AND 2, GULF OF MEXICO, NOVEMBER 1971

CORE 1

DEPTH (cm)	% SAND	% SILT	% CLAY	MEDIAN DIAMETER	WATER CONTENT (% dry wt)
10	0.39	31.61	68.00	9.8	86.78
20	0.10	25.76	74.14	9.6	102.54
30	0.03	28.97	71.00	10.0	73.81
40	0.32	33.24	66.44	9.6	90.13
50	0.07	20.60	79.33	10.2	82.14
70	0.05	31.73	68.22	9.7	73.16
90	0.05	28.68	71.27	9.9	76.16
100	0.05	33.09	66.86	9.5	64.53
125	0.03	29.37	70.60	10.0	71.67
140	0.04	27.11	72.85	10.0	78.90
160	0.11	33.44	66.45	9.7	83.78
180	0.18	28.86	70.96	9.9	68.85
200	0.07	30.01	69.92	9.9	72.96
220	0.06	31.26	68.68	9.8	70.99
230	0.05	29.10	70.85	9.8	70.72
240	0.02	30.19	69.79	9.7	66.99
255	0.04	31.74	68.22	9.6	71.69
275	0.72	44.72	54.56	9.0	77.06
300	1.92	25.97	72.11	10.0	93.56
320	0.07	21.23	78.70	10.3	99.91
340	0.05	25.64	74.31	10.0	88.36
AVERAGE					79.25

CORE 2

DEPTH (cm)	% SAND	% SILT	% CLAY	MEDIAN DIAMETER	WATER CONTENT (% dry wt)
20	2.57	41.12	56.31	8.8	110.11
40	1.65	45.59	52.76	8.4	93.87
60	7.71	48.81	43.48	7.2	68.94
80	1.08	50.52	48.40	7.8	69.72
100	1.96	41.40	56.64	9.0	80.09
120	0.09	34.37	65.54	9.6	87.06
140	3.21	47.73	49.06	8.0	68.79
160	1.24	41.15	57.61	9.0	89.51
180	1.28	37.67	61.05	9.2	84.44
200	2.22	52.17	45.61	7.6	66.10
220	0.25	43.90	55.85	8.9	74.55
240	2.88	37.33	59.79	9.1	70.47
260	2.02	44.60	53.38	8.7	64.99
280	2.02	41.36	56.62	8.8	69.33
300	0.30	34.47	65.23	9.4	83.59
320	0.13	32.86	67.01	9.7	80.37
340	1.09	42.85	56.06	8.7	68.30
360	0.25	20.88	78.87	10.8	91.05
380	2.56	42.63	54.81	8.6	62.46
400	0.63	39.47	59.90	9.2	68.34
420	0.88	45.93	53.19	8.4	59.68
440	1.59	44.96	53.45	8.5	57.83
460	2.68	43.37	53.95	8.5	61.92
480	0.99	38.80	60.21	9.3	65.95
500	5.49	41.19	53.32	8.5	59.33
520	0.69	44.32	54.99	8.6	54.68
540	0.38	34.97	64.65	9.6	67.48
560	3.33	42.15	54.52	8.6	63.16
580	2.72	68.01	29.27	6.5	66.40
AVERAGE					72.70

varies. At 59% porosity, the sediment to water sound speed ratio is about 1.0. This ratio gradually decreases with increasing porosity until it is about 0.98 at 74% porosity. At 66% and 68% porosity, the sound speed ratio is about 0.99. These values are from the polynomial curve which Akal fitted to sound speed and porosity data from over 450 cores. The figures predict a sediment sound speed in Cores 1 and 2 that is less than the water sound speed by about 15 m/sec with bounds to the possible sound speed variation of ±15 m/sec. Examination of Fig. 6 reveals that, upon entering the sediment for Core 1, the profilometer indicated a decrease in sound speed of about 20 m/sec with variations along the core of less than ±10 m/sec. For Core 2, the sound speed decrease upon entering the sediment was about 15 m/sec with variations along the core of less than ±10 m/sec. These values are close to the ones predicted by Akal's best fit curve and are well within the bounds of observed values used by Akal to make his fit (e.g., the observed sound speed ratio varied from about 0.95 to 1.05 at 66% porosity, giving sound speed limits of ±75 m/sec). Thus, the dynamically measured sound speed profile reveals the homogeneous, unlayered nature of this region as well as giving an accurate value for the in situ sound speed of the sediment.

The cores obtained in cooperation with the UT Marine Sciences Institute used a shallow water coring rig designed by Dr. W. E. Behrens. This device pushed the 3 in. (7.6 cm) diam core into the bottom using block and tackle rigging on a shallow draft platform. Using this equipment, cores were obtained in Baffin Bay and Redfish Bay on the Texas Gulf Coast near Corpus Christi.

Figure 7 shows sound speed profiles made in a single core taken in Baffin Bay (August 1972). The top profile labeled "in situ" was made with the transducers mounted on the corer. The other three profiles were made using the transducers that are designed to slide on the core liner. The profile labeled "on deck" was made approximately

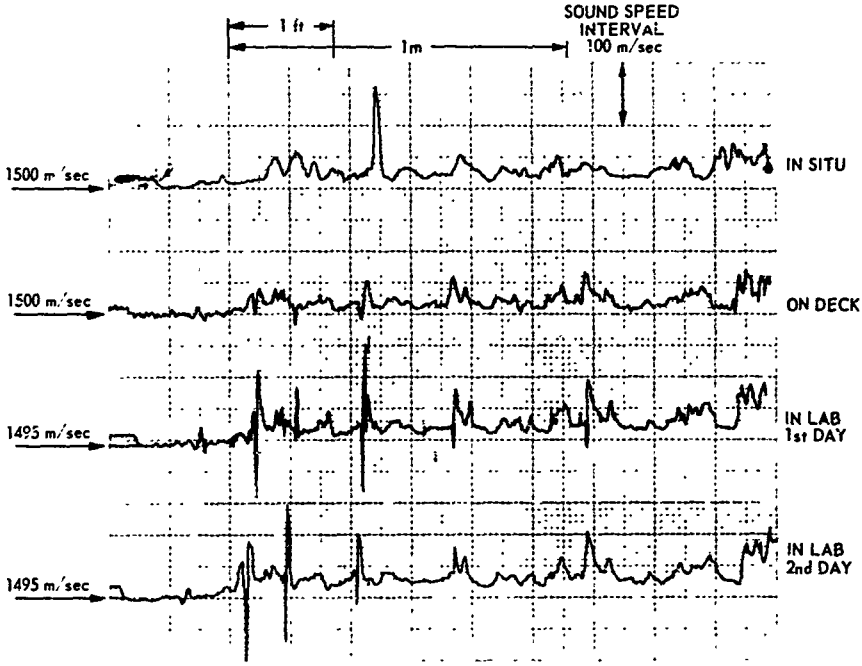

FIGURE 7
SOUND SPEED PROFILES OF CORE 1
FROM BAFFIN BAY, TEXAS, AUGUST 1972

ARL - UT
AS-72-1045-S
DJS - RFO
8 - 28 - 72

3 hours after the core was taken. The two lowest profiles were made the first and second days after removing the cores to the laboratory.

Notice that the absolute value of sound speed changes somewhat from one determination to the next, and the major highlights show some variation in each profile. Some of the discrepancy in location of the highlights from one profile to the next was caused by the method of obtaining the horizontal axis in each determination. The electrical analog of the displacement of the corer into the bottom and of the transducers on the linered core was obtained by attaching a 1/16 in. (0.2 cm) stainless steel cable to the transducer holder or core barrel. This cable was wrapped around a small drum to which a 10-turn potentiometer was attached, thus varying the output voltage of the potentiometer in proportion to the amount of cable reeled from the drum. However, the cable did not wrap smoothly on the drum, with the result that the output of the system was somewhat inconsistent each time it was used.

The large excursions in the bottom two profiles are the result of large attenuation of the signal beyond the capabilities of the AGC system. This attenuation was the result of either gas generation in these layers or physical separation of the material of the core during transportation or possibly both. Profiles taken later than these showed even greater deterioration.

The voltage output of the AGC system can be displayed, thus giving a record of the signal amplitude in the receiver. This record is an indication of the amount of attenuation encountered in the core. Figure 8 displays a sound speed profile of a core compared to a plot of relative signal amplitude, for the same core, derived from the AGC voltage. The full scale excursion from maximum value (top of the trace) to minimum (along the trace) represents a feedback voltage change of approximately 12 dB--which converts to 48 dB/ft (158 dB/m) range of change of attenuation. Both profiles were made

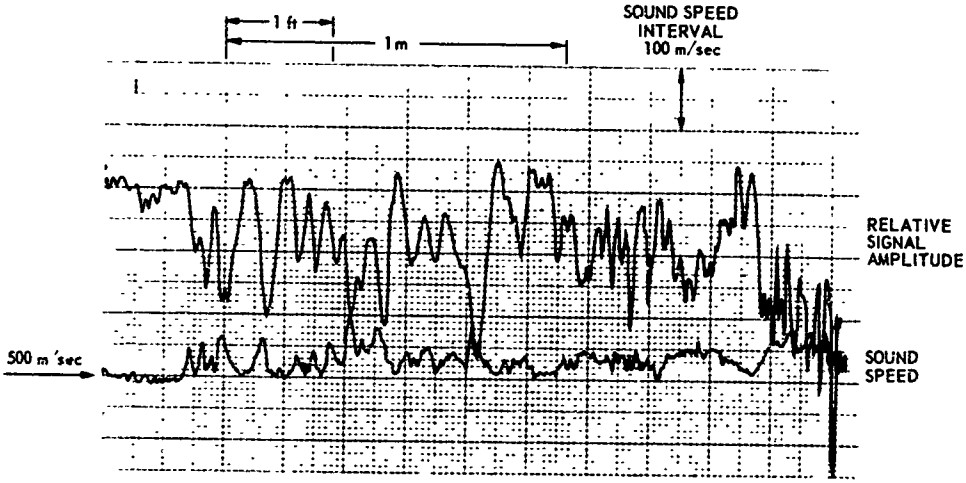

FIGURE 8
ON DECK SOUND SPEED AND ATTENUATION PROFILES
FOR CORE 23 FROM BAFFIN BAY, TEXAS, AUGUST 1972

ARL - UT
AS-72-1044-S
DJS - RFO
8 - 28 - 72

on deck after removing the core from the bottom. Again, the horizontal axis is somewhat inconsistent because of cable wrap, but it can be seen that major increases in sound speed line up with large decreases in signal amplitude. This is expected behavior for the sandy layers encountered in the sediment being cored.

Figure 9 shows a correlation between the lithologies and sound speed profiles of four of the early cores (November 1971) taken from Baffin Bay, Texas. At the time these cores were taken, there was no method available to derive the depth axis for the sound speed profiles except to use a time axis. Because the core barrel was pulled into the bottom by block and tackle, the rate of penetration of the cores varied a large amount and the profiles illustrated in Fig. 9 are only approximate as to depth of highlights. Within this limitation, it can be seen that there is reasonable agreement between the sound speed profiles and their respective lithological diagrams. In the figure, sound speed increases to the right. Overall, a little over 53% of the sand layers correlate with sound speed increases and about 62% of sound speed increases can be correlated to sand layers. The limit of resolution of the measurement technique is controlled by the transducer dimension. Layers with a thickness comparable to the approximately 1/2 in. (1.3 cm) diam of the transducer will not give accurate values. The fine structure for these particular cores indicate many features of this approximate dimension.

Figure 10 shows another correlation of lithologies and sound speed profiles for cores taken from Baffin Bay, Texas, in a different area and at a later time (August 1972) than those shown in Fig. 9. The figure shows sound speed profiles and lithologies of the first three cores of a series of 16 taken. Both Core 1 and Core 3 profiles are in situ profiles. Core 2 profile was made after removal of the core from the bottom but still in place in its liner. Core 2 was taken while making an in situ attenuation profile, and it is given

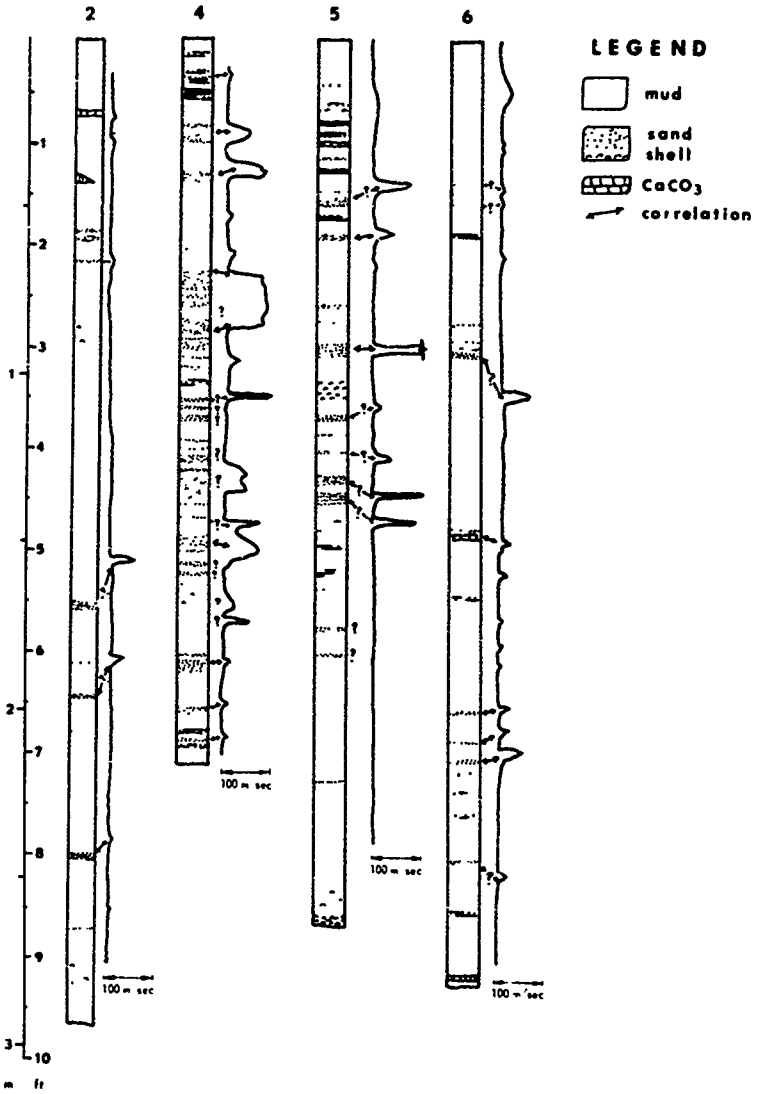

FIGURE 9
CORRELATION OF LITHOLOGIES AND SOUND SPEED
PROFILES OF CORES FROM BAFFIN BAY, TEXAS
NOVEMBER 197[illegible]

ANL UT
85 72 1557
OJS DW
11 21 72

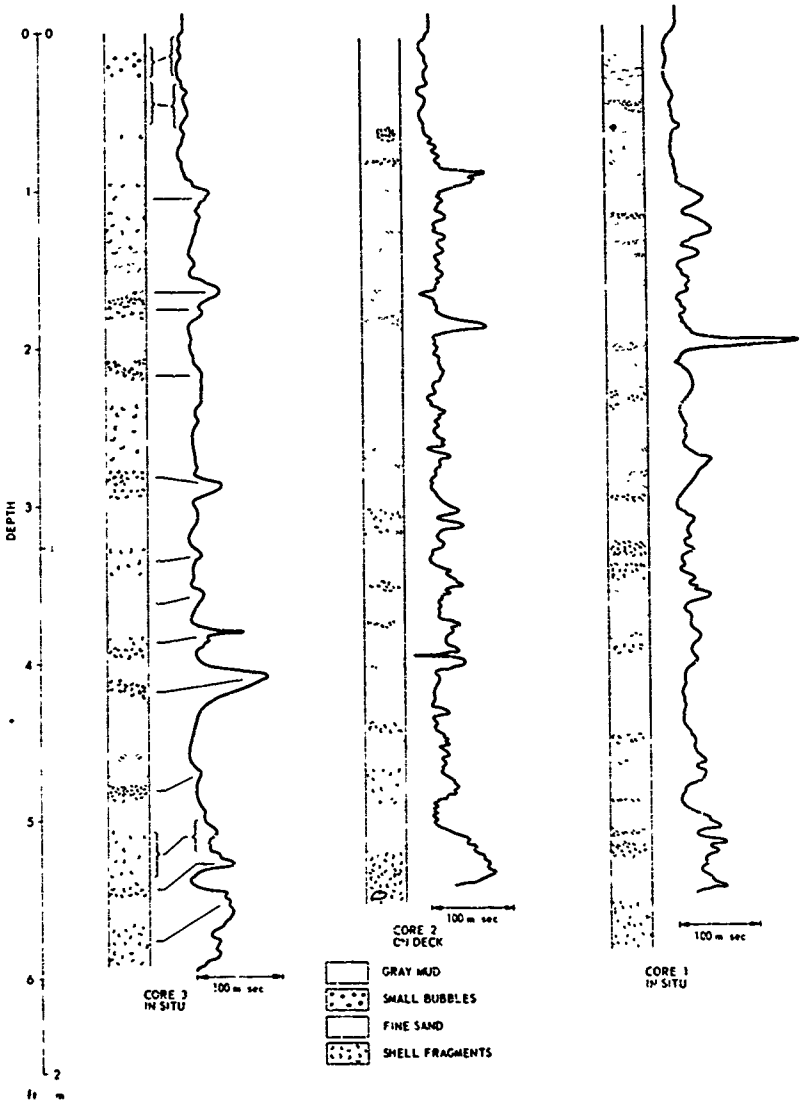

FIGURE 10
CORRELATION OF LITHOLOGIES AND SOUND SPEED
PROFILES OF CORES FROM BAFFIN BAY, TEXAS
AUGUST 1972

ARL UT
BS 73 343
ALA DR
3 12 73

here only for reference to show the amount and type of changes in layering that were encountered in this area. The three cores were taken in a line and spaced approximately 2 ft (0.6 m) apart making a maximum separation between cores of only 4 ft (1.2 m). However, both the sound speed profiles and lithology diagrams show a large variation in layering between the cores. Some layers even show a variation across the 3 in. (7.6 cm) diam of the core. Lines on Core 3, Fig. 10, indicate the degree of correlation between the lithology and sound speed record. Detailed core descriptions, which aid in making these correlations, are given for all three cores in Appendix C. Cores 1, 2, and 3 are representative of the cores taken from this area in that they consist of alternating layers of mud, shell, and fine sand with intermixing of the three types to some degree in each layer.

In Fig. 10 the water-mud interface is located at the top of the figure and is marked as zero on the depth scale. The top 6 to 8 in. (15 to 20 cm) was a light fluffy mud containing gas and it showed a sound speed lower than that of the overlying water. At about 1 ft (0.3 m) depth, the first high sound speed layer was encountered and it consisted of a mixture of mud, sand, and shell. These top shell and sand layers as well as those deeper are seen from Fig. 10 to be uneven, discontinuous and quite often hard to distinguish. However, there is a good correlation between the amount of sand and shell in the cores and the value of sound speed. Sound speed increases with increasing percentage of sand and shell with sand content the more dominant feature. The next distinctive layer encountered varied in depth from 1 3/4 ft (0.5 m) in Core 3 to 2 ft (0.6 m) in Core 1 and consisted of a very sandy layer about 2 to 3 in. (5 to 7.5 cm) thick. This layer seemingly slopes downward from Core 3 to Core 1. The layer is distinguished mainly by a sound speed that is higher than most of the other layers in the cores. This is especially true for Core 1. For the next 2 to 3 ft (0.6 to 0.9 m), the layering consisted

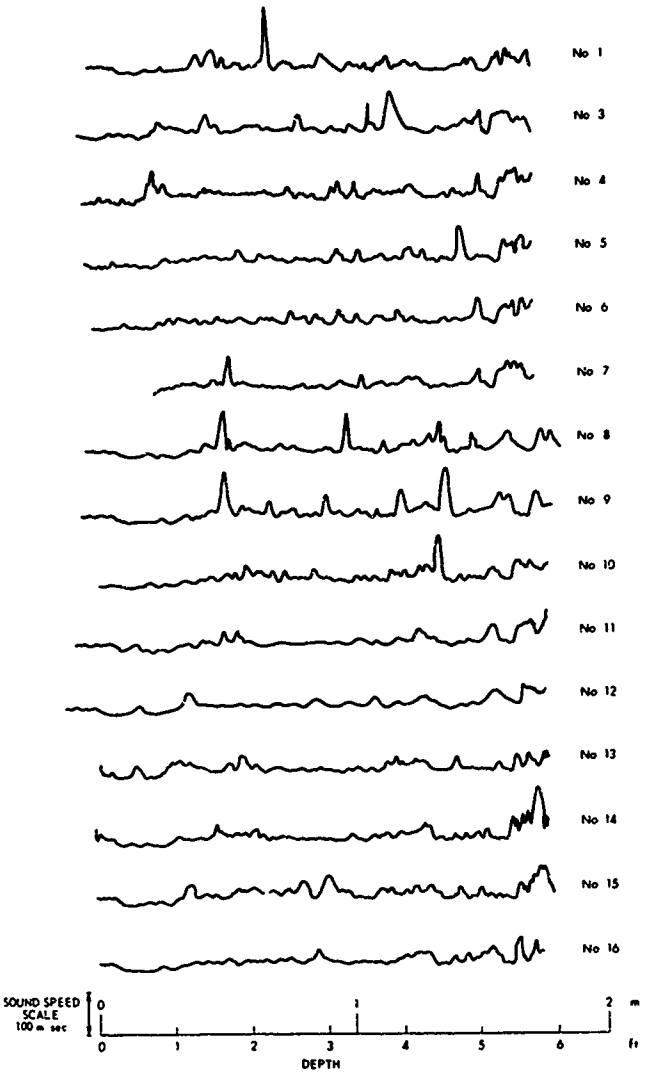

FIGURE 11
IN SITU SOUND SPEED PROFILES FOR FIFTEEN CORES IN SEQUENCE FROM BAFFIN BAY, TEXAS
AUGUST 1972

ARL UT
RS 71 146
ALA DR
3 12 71

of sandy, shelly layers which correlate with high sound speed interspersed with muddy layers having a sound speed only slightly larger than that of water. Many of the sandy layers are too thin to have been detected by the sound speed profile and so do not show up on the profile. Finally, at a depth of 5 to 6 ft (1.5 to 1.8 m), a layer consisting of almost pure shell was encountered which could not be penetrated by the corer. This bottom layering was distinctive for all the cores taken in the area and shows up on the sound speed profiles as a broad, medium high speed peak with a dip in the middle. This distinctive layer occurred in all 15 profiles taken in this region as shown in Fig. 11.

The 15 cores were taken in groups with approximately 1 to 2 ft (0.3 to 0.6 m) separation between cores within a group. All cores were taken within an area of radius of approximately 30 ft (9m). The groupings were: Cores 1, 3, and 4; 5 and 6; 7, 8, and 9; 10, 11, and 12; 13, 14, 15, and 16.

It is possible from the sound speed profiles to identify the distinct bottom layer as continuous throughout the sampled region. Note also that conclusions about complexity of the area, dimensions of features, and extent of layering in the sediment can be drawn from these profiles without supplemental information.

For the most part the complexity of the core lithology, as revealed by the core descriptions in Appendix B, precluded meaningful sampling of portions of the core for sound speed prediction from lithology; however, the high speed layer at about 2 ft (0.6 m) in Core 1 was almost pure sand. Grain size distribution was determined for this material by sieve analysis. Geologically, the layer is described as poorly sorted muddy very fine sand with a mean grain diameter of 0.094 mm (3.4 Φ). Hamilton (1970) gives a graph of sound speed versus mean grain diameter which has been measured for sediments

of the North Pacific. The measured sound speed of 1660 m/sec for the sand layer of Core 1 (Fig. 10) is well within the bounds of 1640 to 1700 m/sec reported by Hamilton for material of the same mean grain size. Significantly, the value measured in the lab, through the core liner (Fig. 7) for this same layer is 1550 m/sec, which is lower than the Hamilton values. Thus, the in situ profilometer measurement provides a better value than the in lab measurement.

Figures 12 and 13 show photographs of sections of Cores 1 and 2 after the liner has been removed and a smooth cut made the length of the core to reveal the internal structure. Drying has caused cracks to appear between some of the layers. The scale at the bottom of the photographs is for Core 1 (as measured from the water interface). Core 2 was laid alongside Core 1 and as many distinctive layers as possible were aligned. The distinct sand layers, at approximately 26 in. in Fig. 12, are the ones which correlate with peaks in the sound profiles at about 2 ft (0.6 m) (see Fig. 10).

The distinctive layers occurring at the bottom of the cores can be seen in Fig. 13. Figure 13 shows in both cores a 4 to 6 in. (10 to 15 cm) layer of shelly mud, then a layer of rather stiff clay, and then a thick layer of shelly mud which graduated to almost pure shell. The shell-clay-shell sequence of Fig. 13 illustrates the distinctive sequence observed to some degree at the bottom of all 15 cores. However, from the sound speed profiles (Fig. 11), we see that in Cores 13 through 16 the clay layer is much less distinct. The offset between features at the bottom of Cores 1 and 2, shown in Fig. 13, is consistent with the sound speed profiles shown in Fig. 10.

Figures 12 and 13 also illustrate the irregular layering one finds in these sediments. In Core 2 (Fig. 12) at 26 in. the sandy layer is about 1/2 in. (1.3 cm) on one side of the core and nearly

BAFFIN BAY – CORE 2

BAFFIN BAY – CORE 1

FIGURE 12
MIDDLE OF CORES 1 AND 2
SHOWING LAYER CORRELATION
BAFFIN BAY, AUGUST 1972

0166(05)-3

END OF
CORE 2

BAFFIN BAY – CORE 2

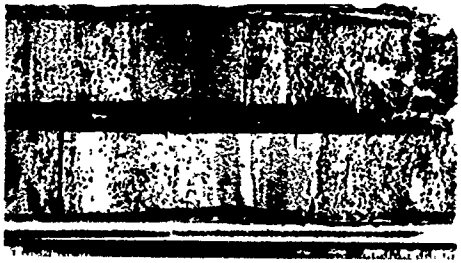

BAFFIN BAY – CORE 1

END OF
CORE 1

FIGURE 13
BOTTOM OF CORES 1 AND 2
SHOWING LAYER CORRELATION
BAFFIN BAY, AUGUST 1972

0166(05)-4

1 in. (2.5 cm) on the other side. The dark and light markings on the smoother portion of the cores are variations in coloration of the mud comprising that part of the core, and there are no large variation in grain size or texture associated with these markings. Notice that there are varying amounts of small shell fragments scattered throughout the layers.

Figure 14 compares in situ sound speed profiles and core descriptions for two cores (22 and 23) which were taken about 3 ft (0.9 m) apart in a region which is about 1/2 mile (0.8 km) from the site of Cores 1 through 16 (Baffin Bay, August 1972). The overall character of the profiles and cores is similar in complexity to those in Fig. 10. The broad layer of increased sound speed occurring at the bottom of the sound speed profile for Cores 1 through 16 (Fig. 11) also occurs at the bottom of Cores 22 and 23, but appears to be less definitive, deeper, and thicker. The analysis of Cores 22 and 23 reveals that the lithology of the bottom 2 ft (0.6 m) matches this sound speed behavior with a broad deep layer having a large shell content, but less shell than that in Cores 1 and 2. Again, as in Fig. 10, the major increased sound speed features of these profiles can be correlated with increased sand and/or shell content. The degree of usefulness of the detailed sound speed profile structure in a complex region such as illustrated in Figs. 9, 10, and 14 can only be revealed by extensive use. Some of the detail which is available might be considered "noise" by a geologist.

A core sound speed profile which is of different character than either the homogeneous cores from the Gulf of Mexico (Fig. 6) or the complex Baffin Bay cores (Figs. 7-14) is given in Fig. 15. This core was taken in Redfish Bay, Texas, on 9 May 1972. The sound speed profile shown is representative of measurements on 7 cores taken at this site. The major character of the Redfish Bay cores is slow changes of sound speed with depth, in particular a uniformly high sound speed in the first 1 1/2 ft (0.45 m) of depth and gradual

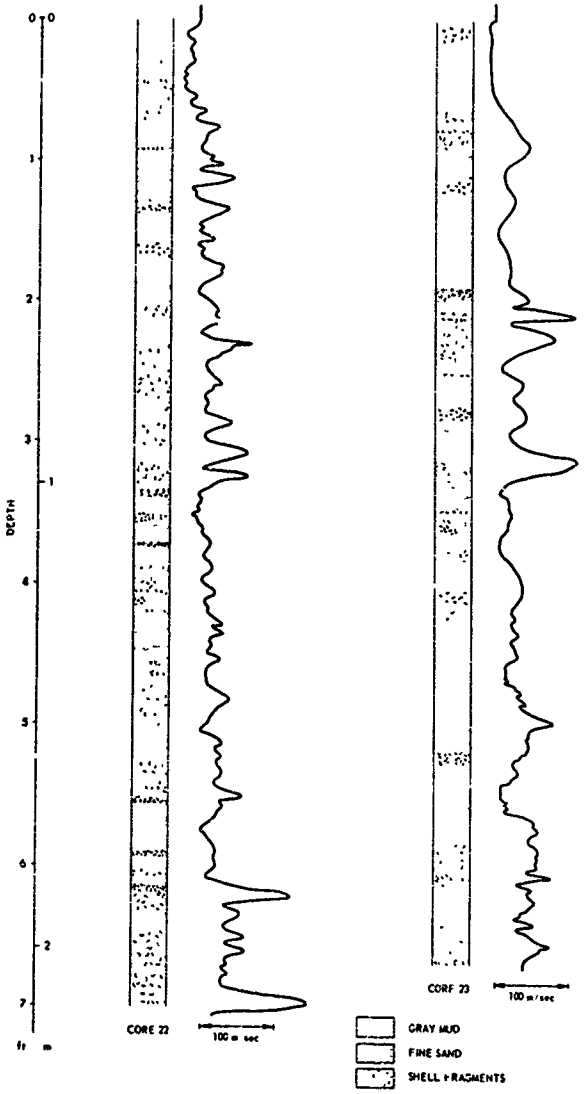

FIGURE 14
CORRELATION OF LITHOLOGIES AND SOUND SPEED
PROFILES OF CORES FROM BAFFIN BAY, TEXAS
AUGUST 1972

ARL, UT
85-71-147
PLA, DR
3-12-73

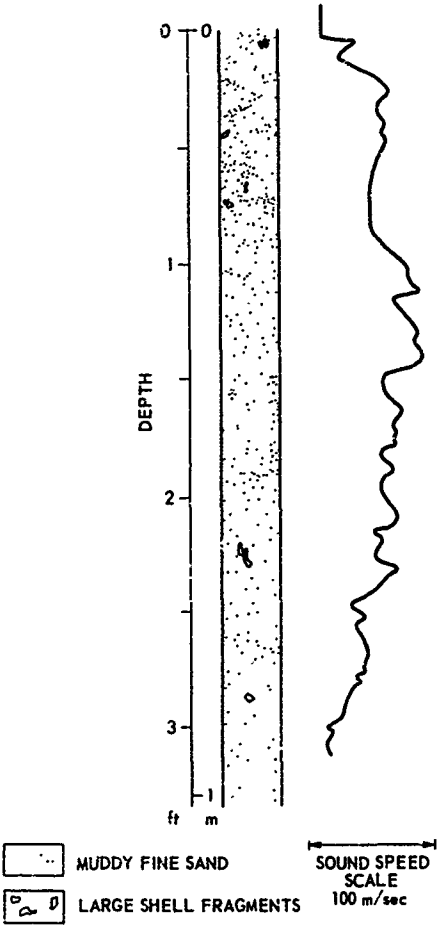

FIGURE 15
CORRELATION OF LITHOLOGY AND SOUND SPEED
PROFILE OF CORE 2 FROM REDFISH BAY, TEXAS
MAY 1972

ARL - UT
AS-73-148
ALA - DR
3 - 12 - 73

sound speed decrease from 1 1/2 ft (0.45 m) to the bottom of the core. Fine structure is present, but the features are less distinct than for the Baffin Bay cores. This is consistent with the core description: no distinct sandy or shelly layers are present. The core consists of a muddy sand matrix containing a uniform distribution of widely dispersed shells and with a sand content varying along the length of the core. The amount of sand is uniformly high throughout the first 1 1/2 ft (0.45 m) of the core and it decreases uniformly from 1 1/2 ft (0.45 m) to the bottom of the core. Many large shells are scattered throughout the core, explaining the presence of fine structure in addition to the broad features.

For the thirteen comparisons of sound speed profiles and lithologies shown in Figs. 5, 6, 9, 10, 14, and 15, one can see good correlation between individual cores and the sound speed profiles. The poor correlation of the sound speed profile from core to core is consistent with poor correlation of lithology from core to core.

Although primary emphasis during this contract year was to obtain the measurements discussed above, some work was directed to investigating use of the profilometer for measuring volume scattering. Sediment internal volume scattering strength data are not available in the literature. In addition to filling this gap in the knowledge of sediment acoustical properties, measurements of volume scattering while coring would provide a useful logging output to supplement the sound speed profile. Furthermore, the well known resonance behavior and large scattering strength of gas bubbles in water indicates scattering data might supply useful in situ information about gas bubbles in sediments.

For the volume scattering study, a third transducer was added to the cutter head. This transducer was identical to two which are used

for sound speed measurements, and was located so that its acoustical axis was at 90° to the acoustical path between the two sound speed transducers. The acoustical feedover to this third sensor, with the elements immersed in clear water, was about 14 dB below the direct path signal. Insertion of the cutter head into saturated sand sediments and muddy sand sediments in the laboratory indicated that volume reverberation levels were below the acoustical feedover. However, when a screen of fine bubbles, generated by hydrolysis, was allowed to pass upward through the cutter head in clear water, an increase in the third transducer output (over measurements in water alone), was observed at some volume concentrations of bubbles. These last measurements were encouraging, because they indicate that if sufficient reduction in the acoustical feedover could be achieved, then volume reverberation measurements in sediments should be feasible. Reducing this feedover would require using a different carrier frequency or a different transducer configuration or baffling, or a combination of these techniques.

DISCUSSION AND CONCLUSION

The experimental program and results outlined above have shown that the technique of obtaining sound speed profiles during normal coring operations is feasible and yields useful information.

1. The capability to dynamically measure sediment sound speed which is in agreement with static probe measurements was demonstrated (Fig. 5). These measured values compared favorably with sound speed values determined from the porosity of the sediment.

2. Dynamic measurements of sound speed in the field (Fig. 6) provided accurate values for in situ sediment sound speed and showed no adverse effect due to the dynamic nature of the measurement. The observed form of the sound speed profile was consistent with the homogeneous nature of the core (Table II) and the value of sound speed measured was in close agreement with values predicted from core analysis.

3. Cores profiled in situ and after periods of storage (Fig. 7) illustrate the progressive deterioration and loss of detail of the sound speed profile. Sound speed values for some layers were different for in situ and laboratory (through the core liner) measurements. Complexity and gross features of the in situ profiles were repeated by the linered (laboratory) profiles.

4. As illustrated by comparison with the core descriptions, the complexity of the Baffin Bay sound speed profiles is an accurate portrayal of the complexity of the core lithology. Regions of homogeneous mud are uncomplicated in the profile (see particularly Fig. 9). Regions with significant shell and/or sand content produce deflections of the sound speed trace which are related to the quantity of sand and/or shell present.

5. For all cores retained and analyzed, no sound speed indicated by the profilometer was outside the bounds of published values for sediments of similar lithology.

6. Usefulness of the sound speed profilometer as a logging tool has been demonstrated: A homogeneous sediment gives a featureless profile within the sediment (Fig. 6), the sediment sound speed also being accurately measured. Complex sediment structure can be detected and information on the extent of layering and dimensions of features can be obtained without core analysis.

RECOMMENDATIONS

1. The profilometer has been shown to provide sound speed data in more detail for a greater in situ depth than previously available. There is a need to determine the usefulness of this information to both acousticians and geologists. It is recommended that the technique be used in a variety of applications that would aid in understanding its usefulness. It is also recommended that the profilometer be used in conjunction with high resolution subbottom profiling equipment.

2. Measurements of the AGC circuit feedback voltage, which is proportional to attenuation of the acoustic signal, show the expected correlation with sound speed. However, no effort was made to transform these relative measurements to a value of sediment attenuation. It is expected that recording values of attenuation will be straightforward and it is recommended that effort continue to develop this measurement technique.

3. The very preliminary measurements of volume scattering reported here reveal the difficult nature of this measurement and do not confirm the usefulness of the technique. It is recommended that effort be continued in understanding the usefulness of volume scattering values in determining sediment properties, including gas content.

4. On at least two occasions in the experimental program, failure of the signal cables (due primarily to the rugged nature of the coring procedure) has resulted in no data. It was accepted early in the program that cabling to the surface was an acceptable compromise until the technique was established. It is recommended that the necessary instrumentation for remote recording on the coring tool be developed to eliminate surface cabling.

In addition, more rugged, armored cable is recommended for transfer of signals from the coring head to the electronics package.

REFERENCES

Akal, T., "The Relationship Between the Physical Properties of Underwater Sediments that Affect Bottom Reflection," Mar. Geol. 13, 251-266 (1972).

Bennin, R. S., and C. S. Clay, "Development of an In Situ Sediment Velocimeter," Hudson Laboratories of Columbia University Technical Report No. 131 (1967).

Hamilton, E. L., "Sediment Sound Velocity Measured In Situ from TRIESTE," J. Geophys. Res. 68, 5991-5994 (1963).

Hamilton, E. L., "Sound Velocity and Related Properties of Marine Sediments, North Pacific," J. Geophys. Res. 75, 4423-4446 (1970).

Lewis, L. F., V. A. Nacci, and J. J. Gallagher, "In Situ Marine Sediment Probe and Coring Assembly," NUSL Report No. 1094 (1970).

APPENDIX A

CIRCUIT DIAGRAMS

The following diagrams are included:

Pulse Timing Generator and Oscillator Schematic (AS-72-5)
Transmit Signal Gate Schematic (AS-72-6)
Power Amplifier Schematic (AS-72-8)
Delay Pulse Generator Schematic (AS-72-7)
Line Driver Preamp and Filter Schematic (AS-72-1567
AGC Amplifier Schematic (AS-72-1568)
Time Delay to Voltage Converter Schematic (AS-72-1569)
AGC Amplifier Block Diagram (AS-72-1570)
Time Delay to Voltage Converter Block Diagram (AS-72-11)
Time Delay to Voltage Converter Timing Diagram (AS-72-12)

Preceding page blank

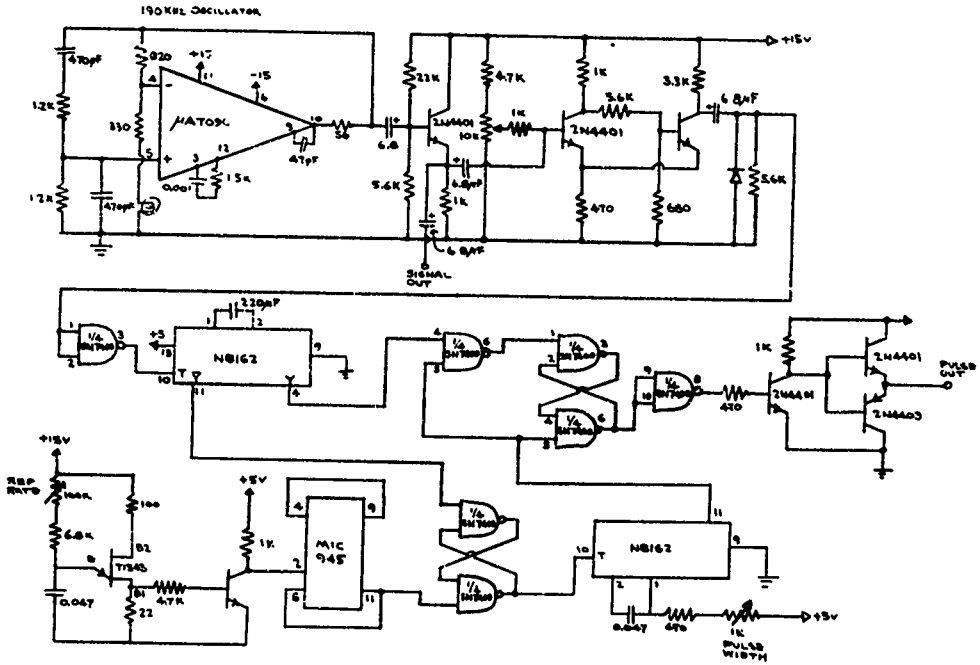

PULSE TIMING GENERATOR AND OSCILLATOR SCHEMATIC

Preceding page blank

ARL - UT
AS-72-5
DJS - DR
1 - 17 - 72

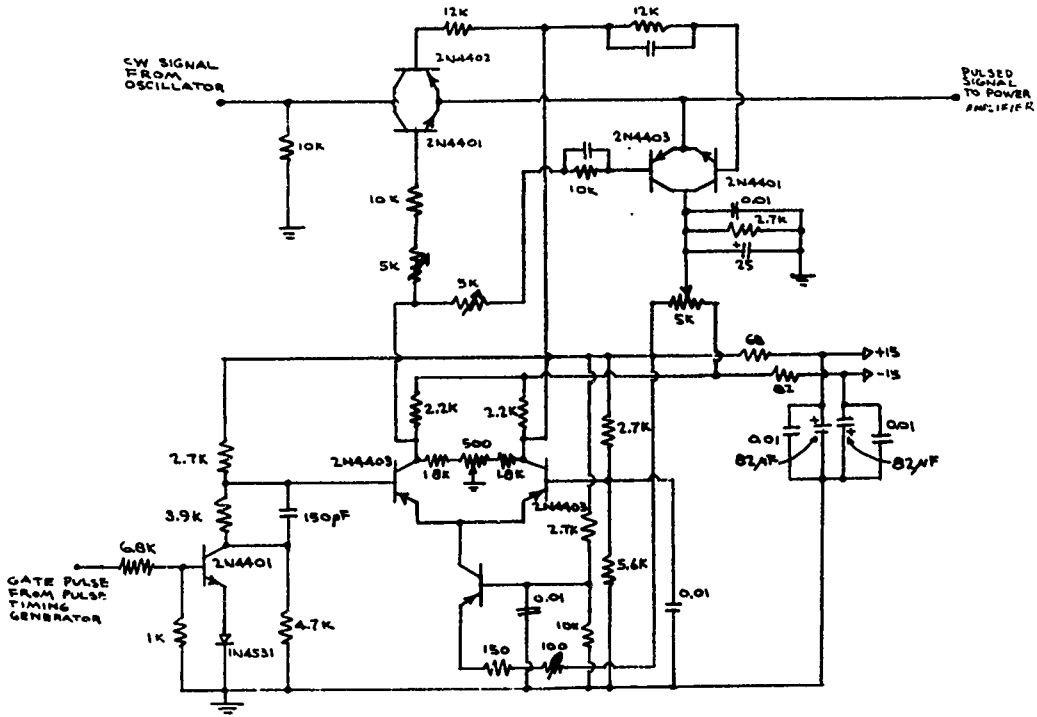

TRANSMIT SIGNAL GATE SCHEMATIC

ARL - UT
AS-72-6
DJS - DR
1-17-72

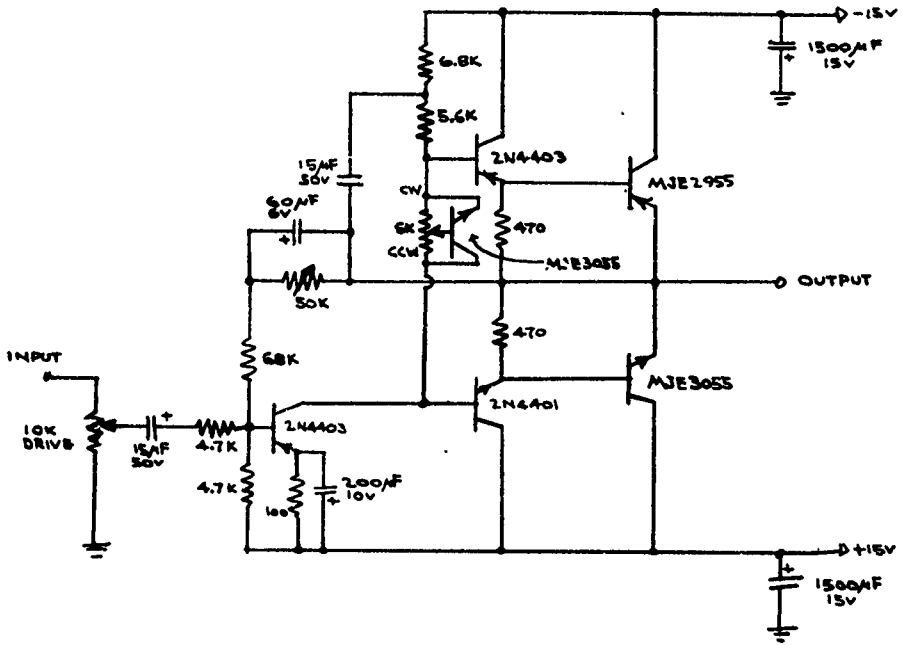

POWER AMPLIFIER SCHEMATIC

ARL-UT
AS-72-8
DJS-DR
1-17-72

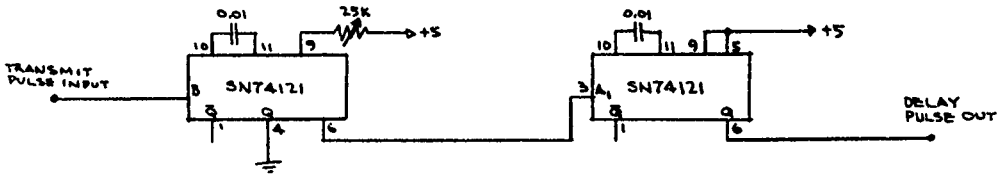

DELAY PULSE GENERATOR SCHEMATIC

ARL - UT
AS - 72 - 7
DJS - DR
1 - 17 - 72

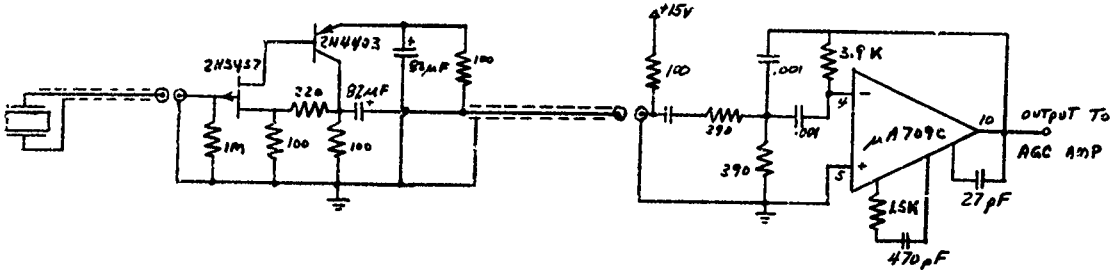

LINE DRIVER PREAMPLIFIER AND FILTER SCHEMATIC

APL - UT
AS-72-1567
DJS - DR
11 - 30 - 72

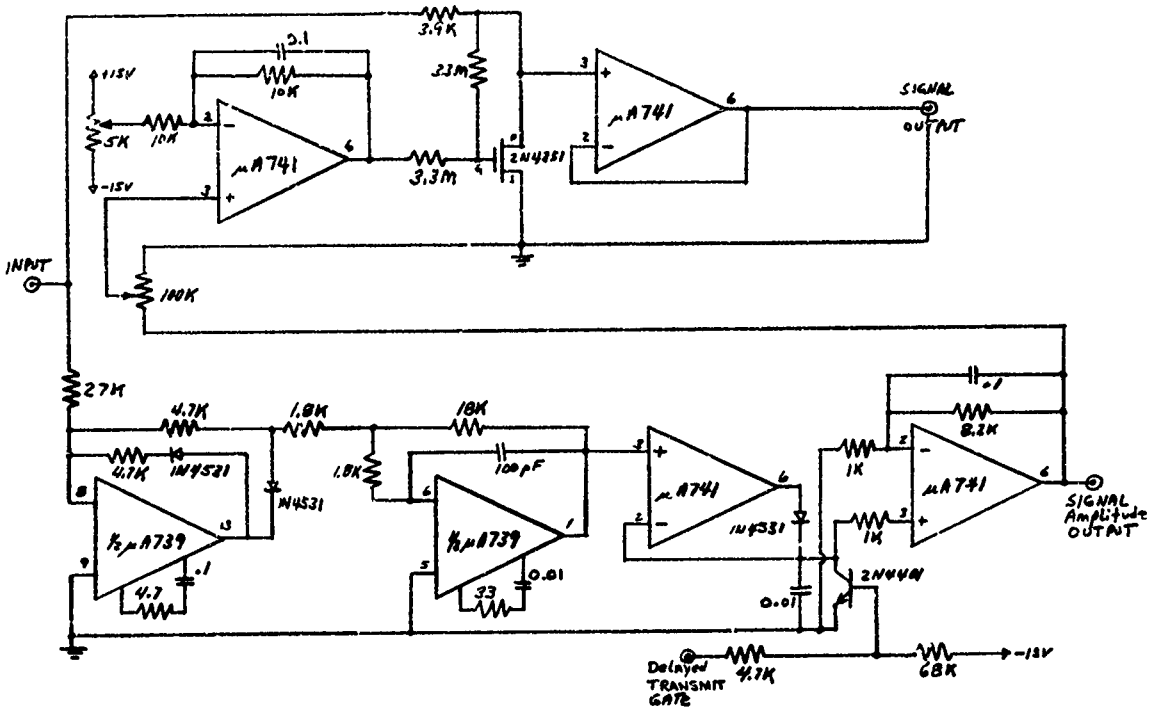

AGC AMPLIFIER SCHEMATIC

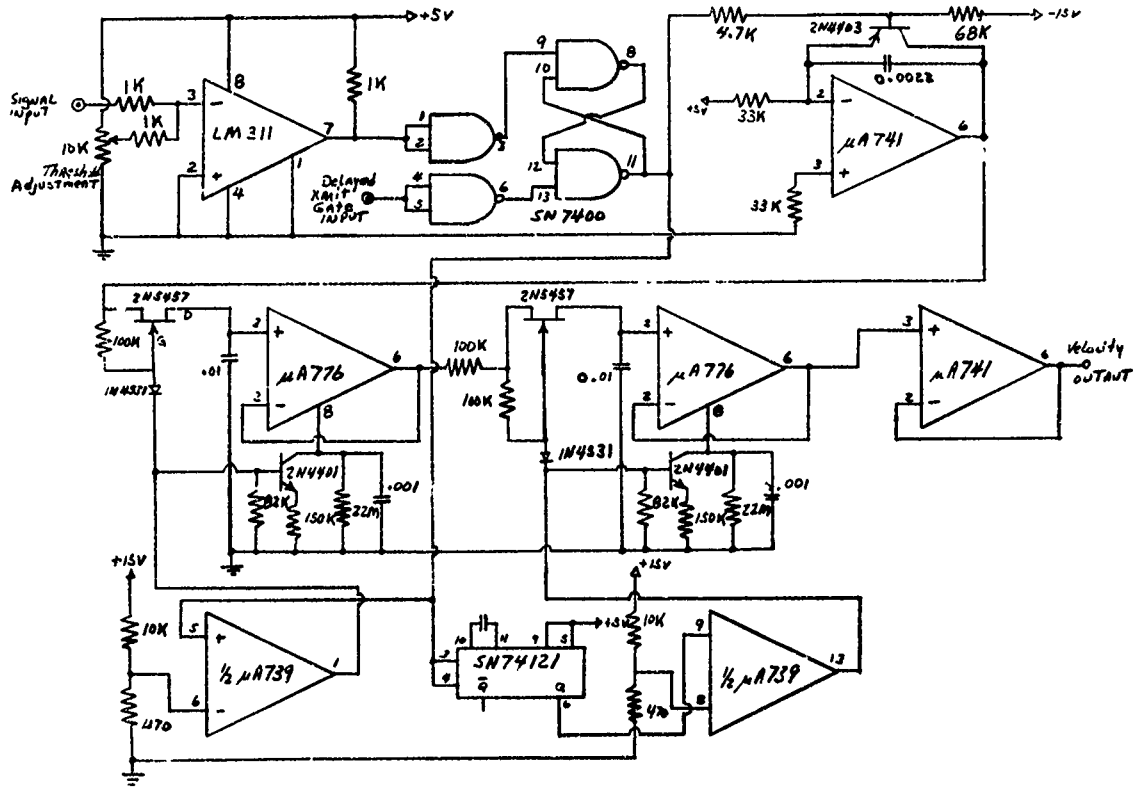

TIME DELAY TO VOLTAGE CONVERTER SCHEMATIC

ARL - UT
AS-72-1569
DJS - DR
11-30-72

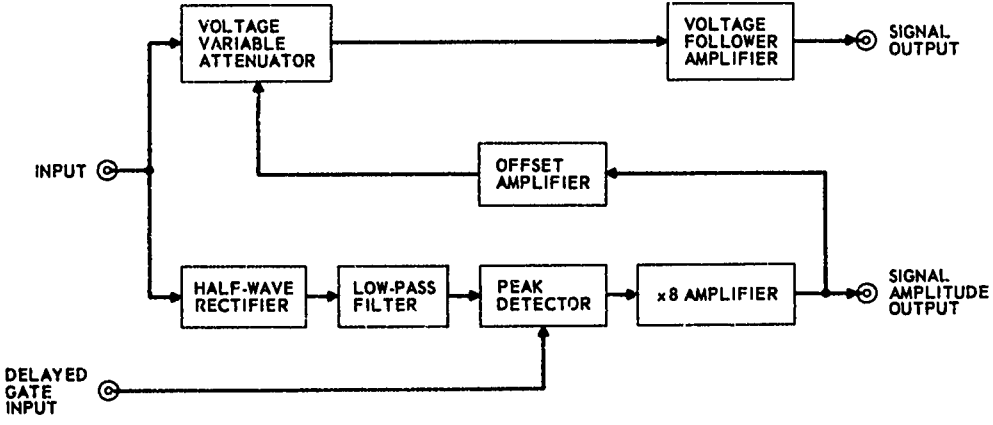

AGC AMPLIFIER BLOCK DIAGRAM

ARL-UT
AS-72-1570
DJS-DR
11-30-72

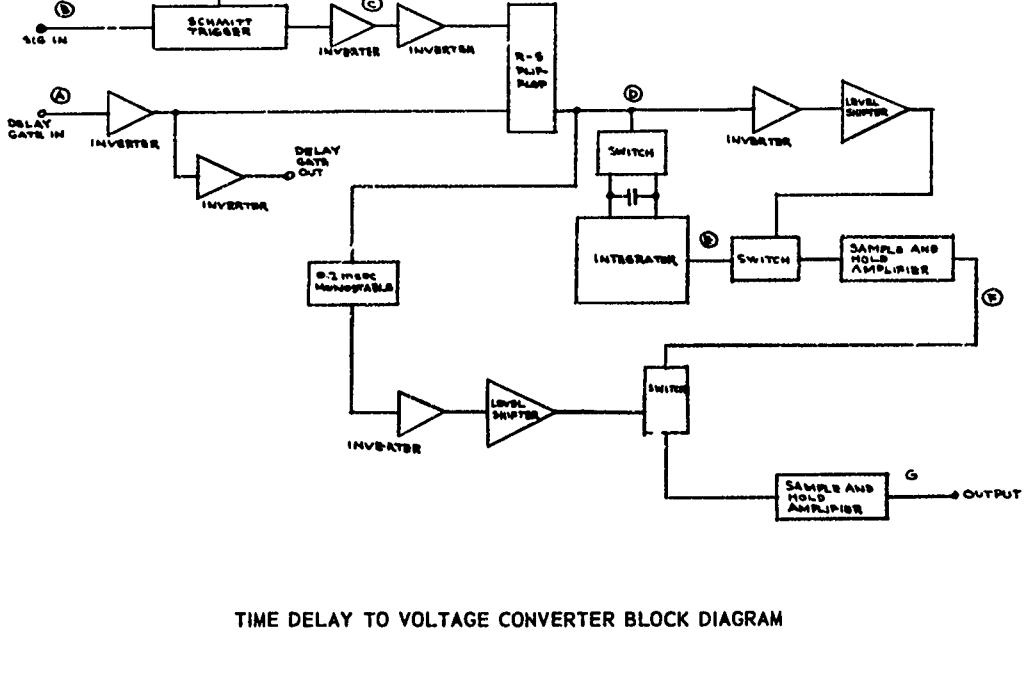

TIME DELAY TO VOLTAGE CONVERTER BLOCK DIAGRAM

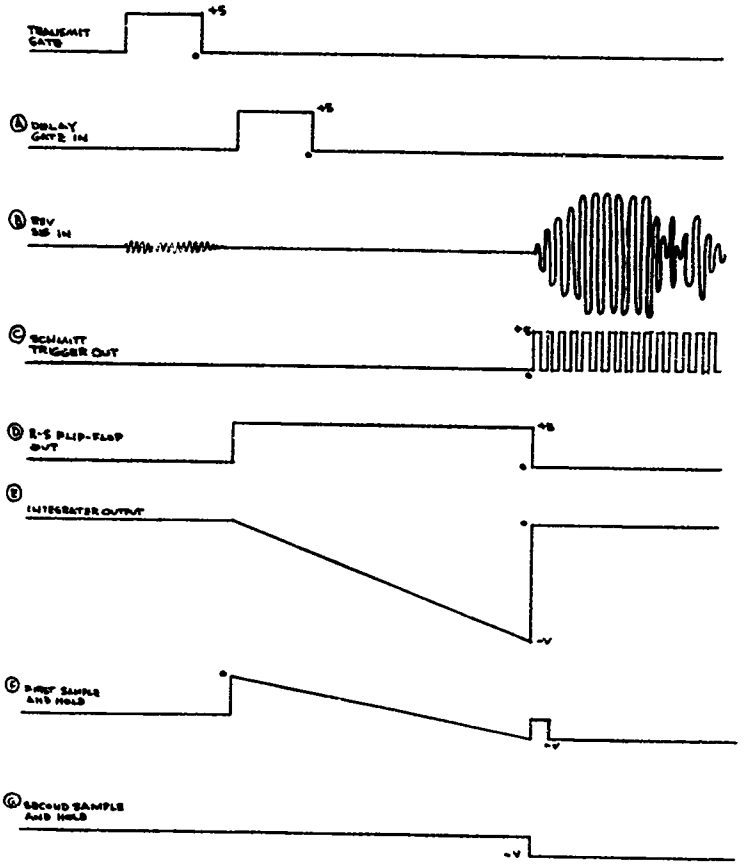

TI.' DELAY TO VOLTAGE CONVERTER TIMING DIAGRAM

ARL - UT
AS-72-12
DJS - DR
1 - 17 - 72

APPENDIX B

EXAMINATION OF ACCURACY LIMITS OF THE PROFILOMETER

I. Error Due to Thermal Expansion of Cutter Head

Consider a cutter head of diameter D_o at temperature T_o. The circumference K_o is given by

$$K_o = \Pi D_o \quad . \tag{B1}$$

A change of temperature to T_1 will result in an increase of circumference to K_1. The wall thickness will also increase, but by an amount smaller than the circumference change. Ignoring the wall thickness change, the new diameter D_1 is:

$$D_1 = K_1/\Pi \tag{B2}$$

Thus the change in diameter is related to the change in circumference by:

$$\Delta D = D_1 - D_o = (K_1 - K_o)\Pi = (\Delta K)\Pi \quad . \tag{B3}$$

The coefficient of linear thermal expansion α can be expressed

$$\alpha = \left(\frac{\Delta K}{K_o}\right)(\Delta T) \quad . \tag{B4}$$

Combining Eqs. B1, B3, and B4:

$$\frac{\Delta K}{K_o} = \alpha \Delta T = \frac{\Delta D}{D_o} \quad . \tag{B5}$$

Now the output voltage V of the profilometer is a linear function of the time delay t between transmission and reception of the acoustical pulse. This time delay is in turn a function of the acoustical separation of the transducers X and the acoustical propagation speed c in the medium between the transducers. Thus, with k a proportionality constant:

$$V = kt = k\,X/c \quad . \tag{B6}$$

Both X and c are functions of the temperature T; thus so are t and V:

$$V(T) = kt(T) = k\,\frac{X(T)}{c(T)} \quad . \tag{B7}$$

The acoustical separation of the transducers is linearly related to and approximately equal to the diameter of the cutting head D. Thus, write

$$X(T) = D_o + \Delta D(T) \quad . \tag{B8}$$

Combining B7 and B8, one obtains

$$V(T) = k\,\frac{D_o + \Delta D(T)}{c(T)} \quad . \tag{B9}$$

Now, the percentage error E introduced by assuming that the diameter is constant (i.e., assuming no thermal dimension changes) can be determined. One writes

$$V(T, D{=}\text{const.}) = k\,\frac{D_o}{c(T)} \quad , \tag{B10}$$

and

$$E = 100 \frac{V(T) - V(T, D=\text{const.})}{V(T)} \tag{B11}$$

Thus

$$E = 100 \frac{k \frac{D_o + \Delta D(T)}{c(T)} - k \frac{D_o}{c(T)}}{k \frac{D_o + \Delta D(T)}{c(T)}}$$

or

$$E = 100 \frac{\Delta D(T)}{D_o + \Delta D(T)} \quad ,$$

which can be approximated by

$$E = 100 \frac{\Delta D(T)}{D_o} \quad . \tag{B12}$$

But from (B5):

$$\frac{\Delta D(T)}{D_o} = \alpha \Delta T$$

Therefore,

$$E = 100\, \alpha \Delta T \quad . \tag{B13}$$

The coefficient of thermal expansion of stainless steel is about $10^{-5}/°C$. Assume one is interested in the error introduced by a thermal variation of 50°C; then from Eq. (B-13):

$$E = (100)(10^{-5})(50) = 5 \times 10^{-2} \quad .$$

The error in voltage, and therefore in sound speed, introduced by ignoring thermal size changes for a 50°C temperature variation is therefore 0.05%.

II. Error Due to Ramp Nonlinearity

The time delay to voltage converter has an adjustable time delay between the transmit pulse and the beginning of the ramp. This time delay permits adjustment of the output voltage to keep it within the capabilities of the recording device being used. In practice it is set to one value and not changed for a series of cores.

If the ramp were perfectly linear and its slope were exactly known, a single measurement of output voltage in a medium of known sound speed would suffice to calibrate the instrument at a given setting of the time delay. If the ramp were somewhat nonlinear, but were nominally linear over the ramp segment used for the travel time variations which are produced by observed sound speed variations in sediments, then a 2-point calibration (i.e., measurement of output voltage for two media of known sound speed) would suffice for a given delay adjustment. If the ramp were very nonlinear, then a multiple point calibration would be necessary for any given delay adjustment.

In order to test the linearity of output voltage with sound speed variation, calibration measurements were made with the transducers and cutter head immersed in stirred deionized water in an insulated water bath. The profilometer output voltage was recorded as a function of the temperature of the deionized water over a temperature range from 10 to 29°C. Measurements by Greenspan

and Tschiegg (1957) were used to convert the deionized water temperature to sound speed. This resulted in a tabulation of profilometer output voltage versus sound speed. The experiment was repeated for two different time delay settings and a straight line was fitted to each data set by a least squares fit. The sound speed range of these measurements was from 1447.6 m/sec to 1507.1 m/sec while the output voltage ranges were -1.37 to -1.245 Vdc and -0.685 to -0.584 Vdc. Maximum deviation of the measured output voltage versus sound speed data from the fitted straight line for either data set is 0.07%. Thus, ramp slope nonlinearity results in a percentage error no larger than 0.07% over a 60 m/sec sound speed variation. This indicates a good approximation to linearity over short segments of the ramp. However, the slope of the fitted line was different for the two data sets indicating a measurable nonlinearity for long segments of the ramp. Slope of the lower voltage data set is -588.9 m/sec/V, while for the higher voltage data set it is -477.0 m/sec/V.

A family of voltage curves versus sound speed, with linearly changing slope between members of the family, was then generated. Figure B1 illustrates this family of curves and compares them with the two data sets used to generate them. Also shown in Fig. B1 is a third set of data for intermediate output voltages. These data compare favorably with the generated curves in their vicinity.

The exact slopes of the curves for different time delay settings (giving different output voltages a a given sound speed) will vary when the physical arrangement of the measurement transducers is modified--for example, by using different cutter heads or different transducers. Usefulness of these calibration measurements is in demonstrating that a 2-point field calibration should allow measurements within 0.1% accuracy (0.07% for a 60 m/sec sound speed change) assuming the calibration points are known to within this accuracy. If only a

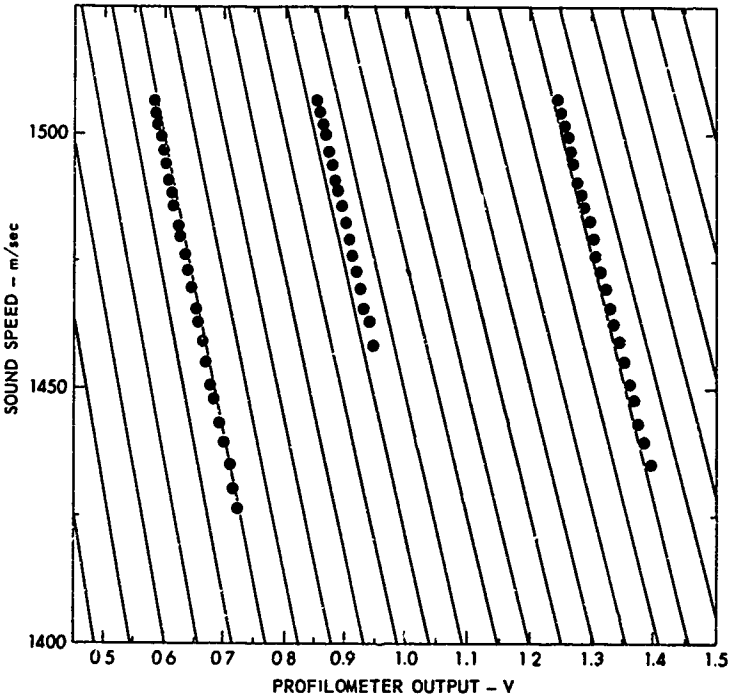

FIGURE B1
SOUND SPEED vs VOLTAGE OUT OF SOUND SPEED PROFILOMETER

ARL - UT
AS - 73 - 243
ALA - DR
3 - 26 - 73

single point calibration is used (output voltage is measured for one known sound speed) and a family of curves such as Fig. B1 is available, it is possible to identify the slope being used and still maintain the precision of the data.

A 2-point field calibration was used whenever possible for the measurements given in this report. Sound speeds at the two calibration points were either measured with a Ramsay Mark V sound speed probe or were determined from tables using measured values of temperature and salinity. In a few cases, only a single point field calibration was used. A 2-point field calibration is the recommended procedure.

REFERENCE

Greenspan, M., and C. E. Tschiegg, "Tables of the Speed of Sound in Water," J. Res. Natl. Bur. Standards 59, 249-254 (1957).

APPENDIX C

GEOLOGICAL DESCRIPTION OF CORES

Preceding page blank

GEOLOGICAL DESCRIPTION OF CORE
Core 1 Baffin Bay, Texas, August 1972
Sheet 1 of 3

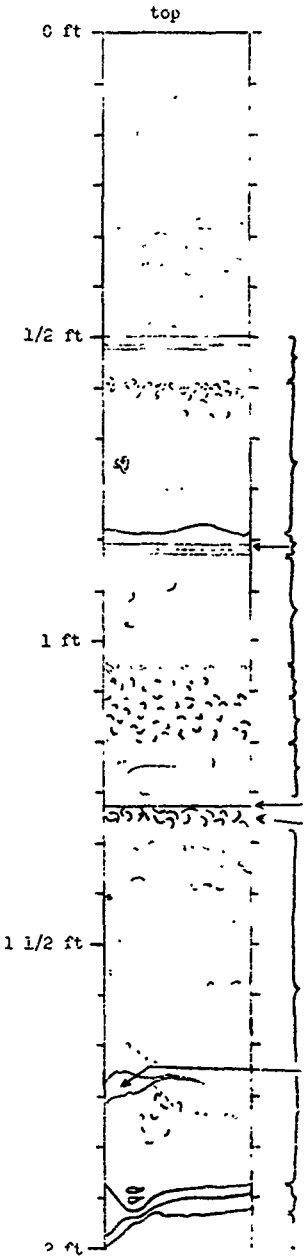

gray mud with 1 to 2 mm thick discontinuous fine sand lenses

brownish cream colored carbonate mud, laminae grading into darker colored fine sandy shelly layer below

gray mud with shelly zone at top & dense shelly "nodule" at ~ 8 1/2 in.

light cream colored carbonate mud lamina, flanked by light gray mud layers

laminated gray and lighter gray mud with some fine shell material and rare coarse shell fragments

fine sandy gray mud with broken shells

muddy shelly fine sand

gray mud with dark rusty brown stripe (illus.), a few fine sandy lenses ~ 3 to 5 mm thick, and rare shells

dark rusty brown mud lamina

coarse & whole shell layer, fine sand matrix

gray mud with fine sand lenses & scattered shells as illustrated

light gray swirled in here

light gray mud layer

AS-73-154

Preceding page blank

GEOLOGICAL DESCRIPTION OF CORE
Core 1 Baffin Bay, Texas, August 1972
Sheet 2 of 3

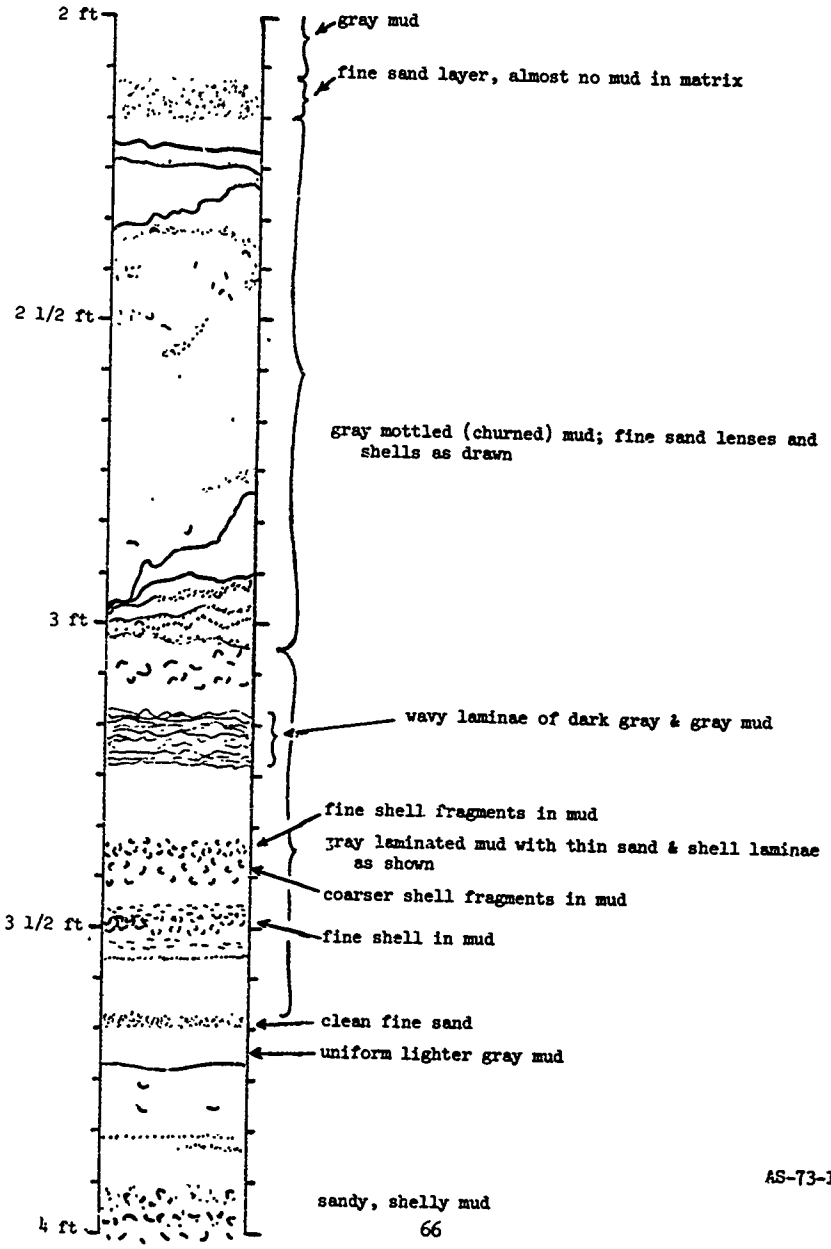

AS-73-155

GEOLOGICAL DESCRIPTION OF CORE
Core 1 Baffin Bay, Texas, August 1972
Sheet 3 of 3

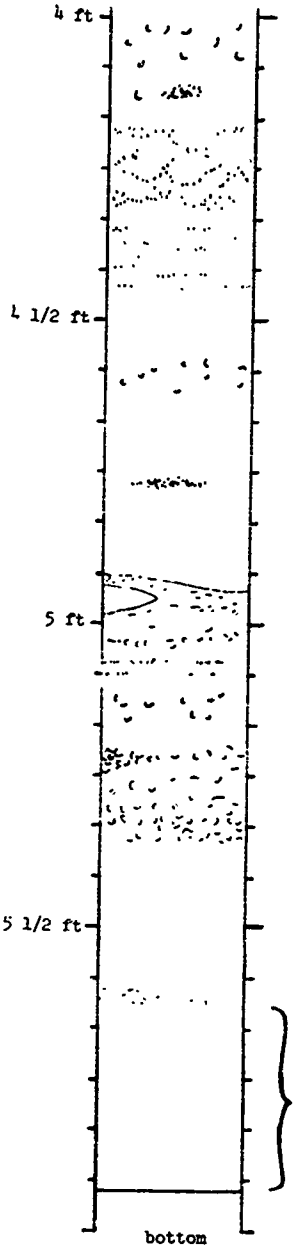

all of last 2 ft of core is laminated gray mud (laminations being slight differences in color of gray) with sand & shell dispersed throughout as shown

very shelly mud with coarse & whole shell material 2 to 5 mm in size

AS-73-156

GEOLOGICAL DESCRIPTION OF CORE
Core 2 Baffin Bay, Texas, August 1972
Sheet 1 of 3

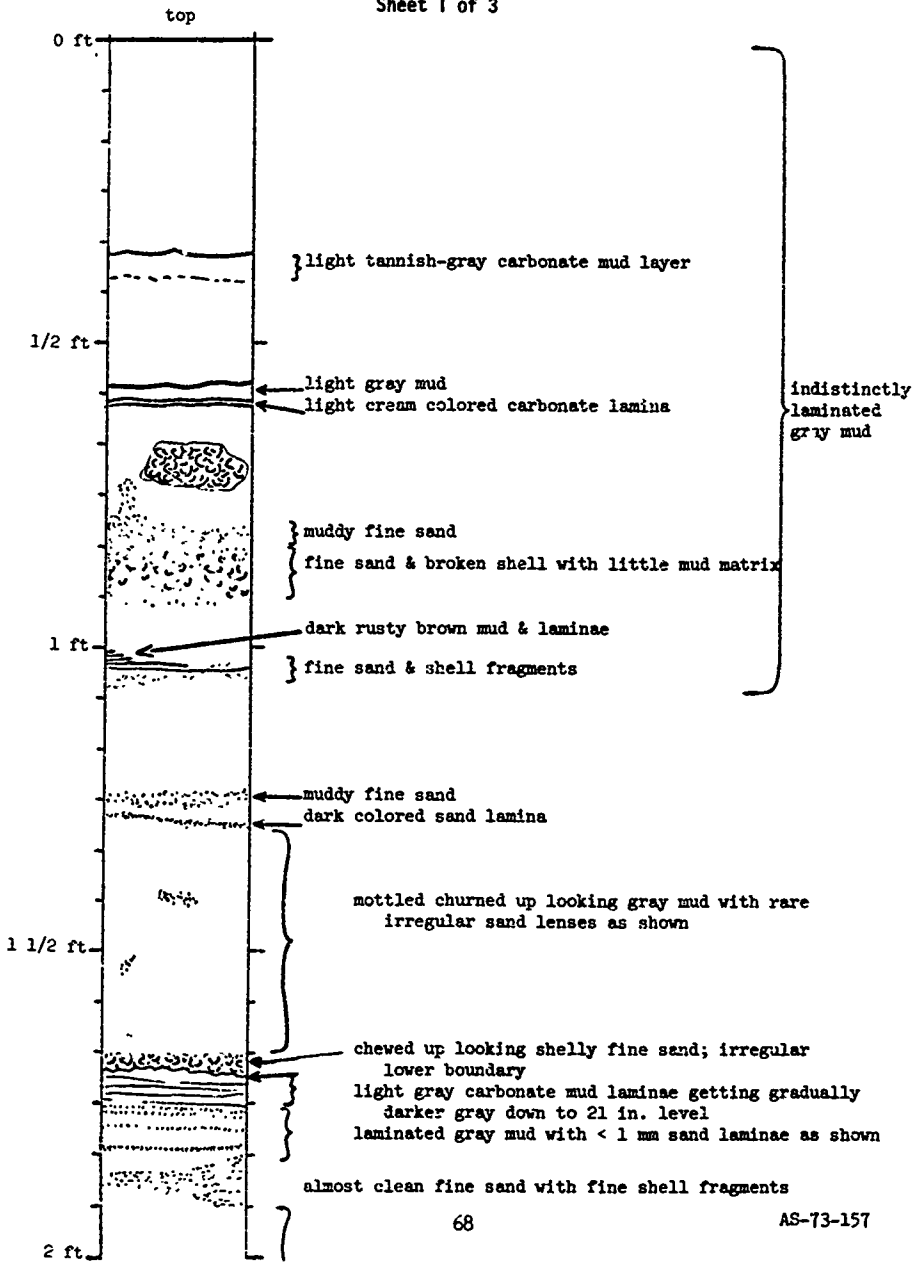

AS-73-157

GEOLOGICAL DESCRIPTION OF CORE
Core 2 Baffin Bay, Texas, August 1972
Sheet 2 of 3

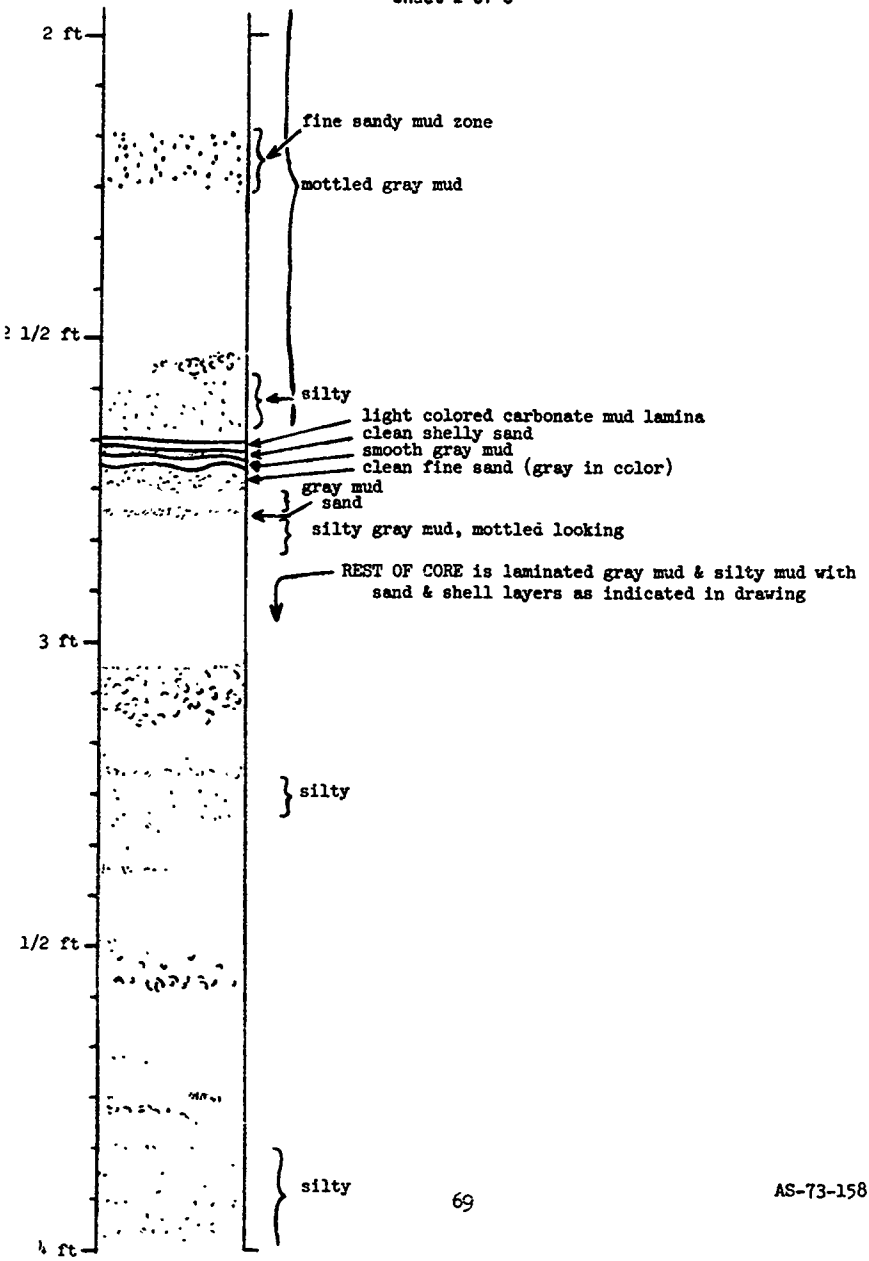

AS-73-158

GEOLOGICAL DESCRIPTION OF CORE
Core 2 Baffin Bay, Texas, August 1972
Sheet 3 of 3

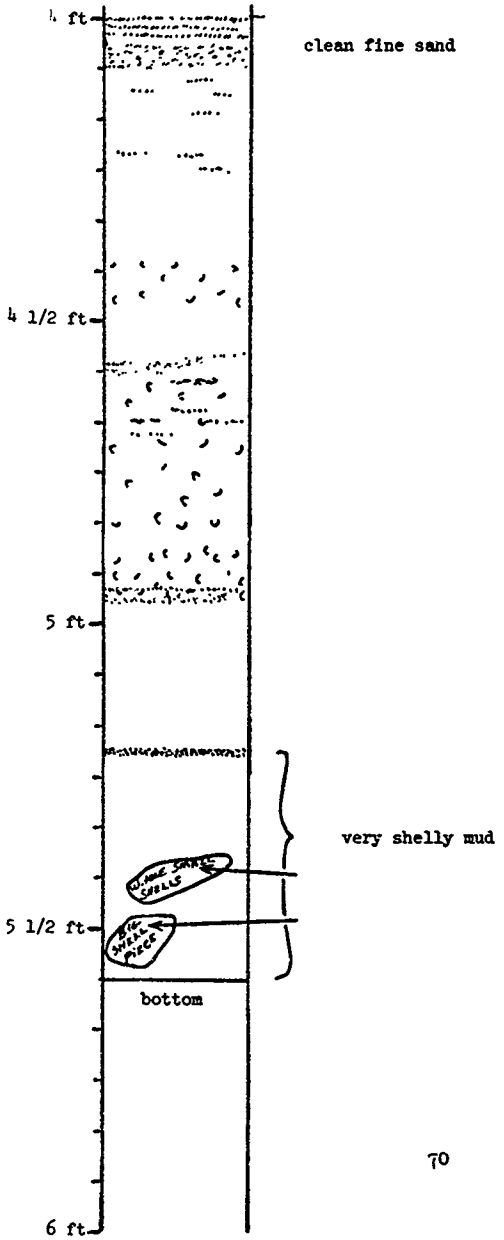

AS-73-159

GEOLOGICAL DESCRIPTION OF CORE
Core 3 Baffin Bay, Texas, August 1972
Sheet 1 of 3

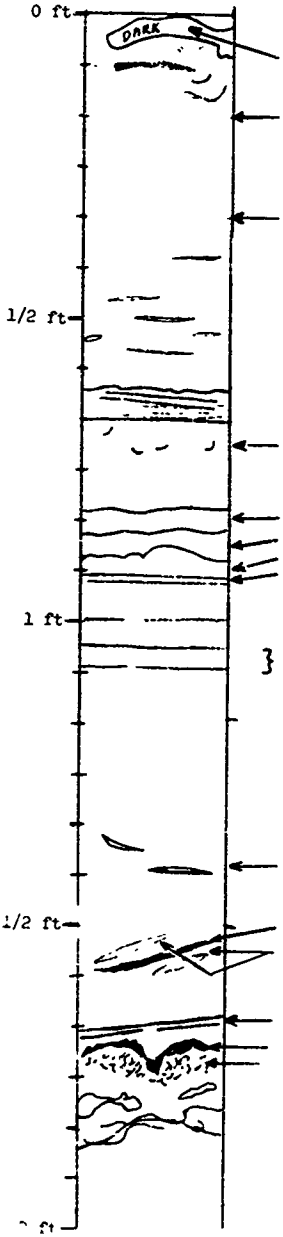

gray mud mottled with black

gray mud with small (~ 1 mm) bubble cavities and dark gray color splotches

gradual transition to gray mud with small, thin fine sand lenses

slightly brownish light gray mud

sparse to rare shells

gray mud

gray mud

gray mud (slightly lighter than above layer)

medium gray mud

distinct light cream color layer mud

gray mud

gray mud with sparse small shell fragments (medium sand size) and some fine sand

very thin alternating cream & gray laminae: mud & some fine sand

gray sandy mud with a few indistinct lighter layers

gray mud with sparse shell fragments (~ 0 to 2 mm) throughout

sandy lenses

dark gray mud
"sand-shell" } in gray mud matrix with no shell

gray mud laminae alternating with shelly sand laminae

dark gray muddy sand

clean coarse shell fragments

whole layer is highly contorted gray muddy fine sand & coarse (2 to 3 mm) shell fragments with some whole shells

uniform gray mud

AS-73-160

GEOLOGICAL DESCRIPTION OF CORE
Core 3 Baffin Bay, Texas, August 1972
Sheet 2 of 3

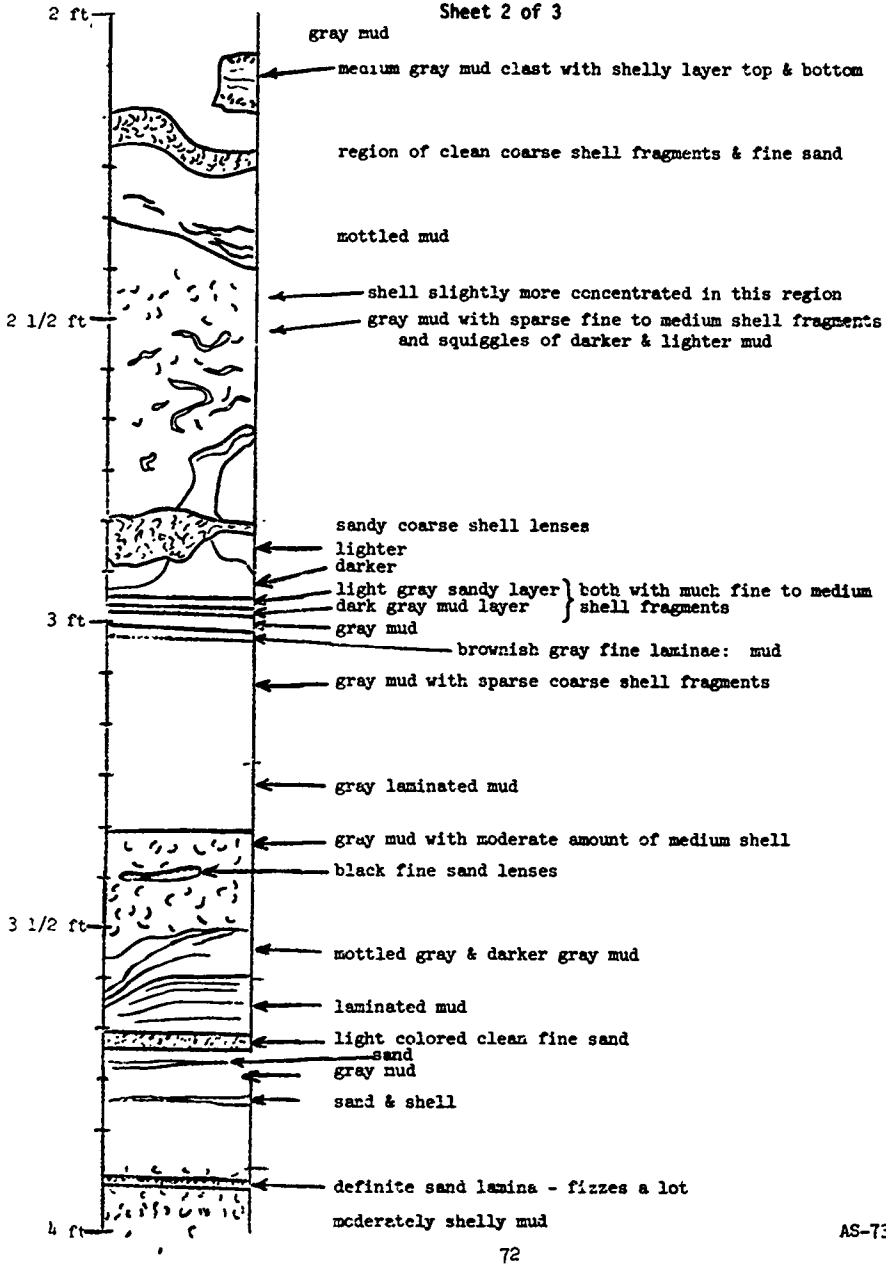

AS-73-161

GEOLOGICAL DESCRIPTION OF CORE
Core 3 Baffin Bay, Texas, August 1972
Sheet 3 of 3

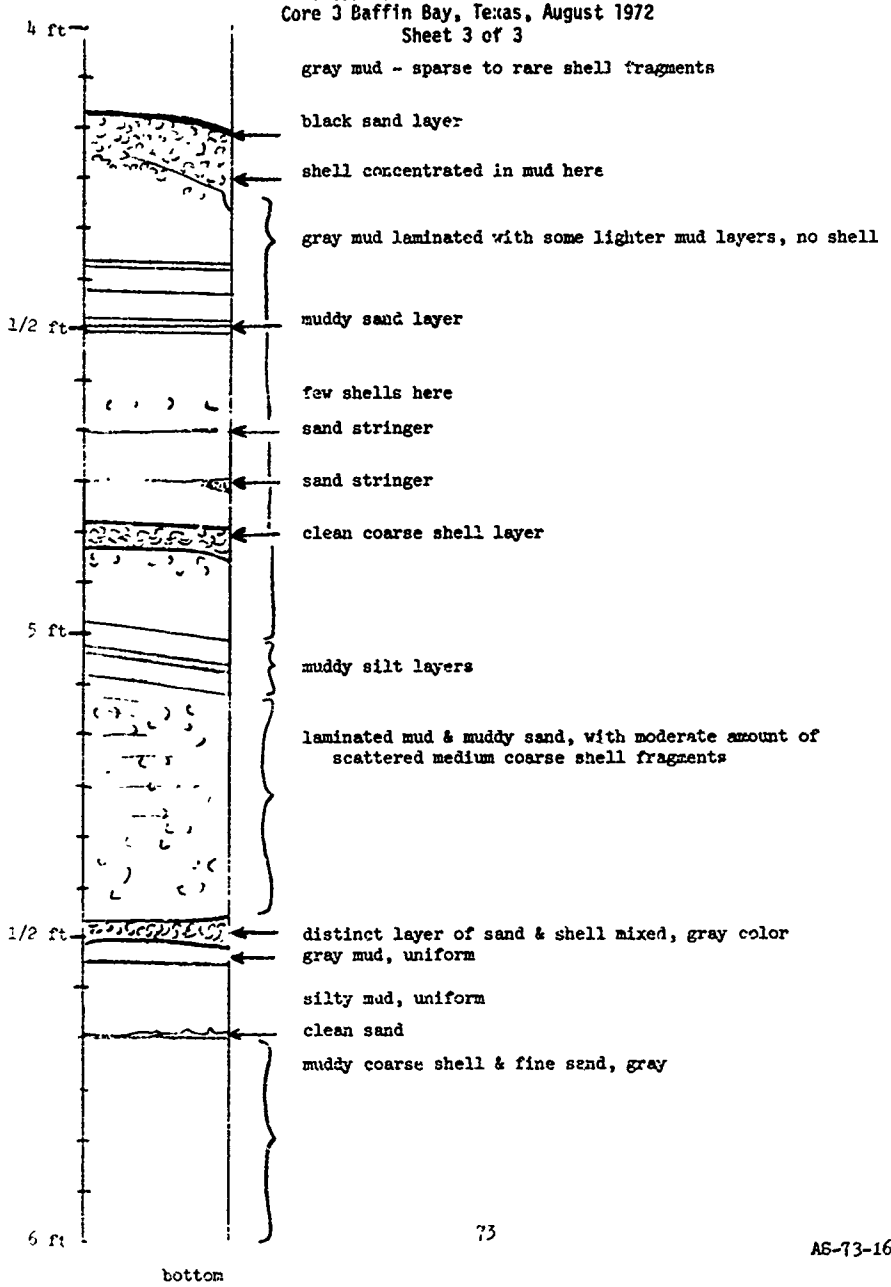

AS-73-162

GEOLOGICAL DESCRIPTION OF CORE
Core 22 Baffin Bay, Texas, August 1972
Sheet 1 of 4

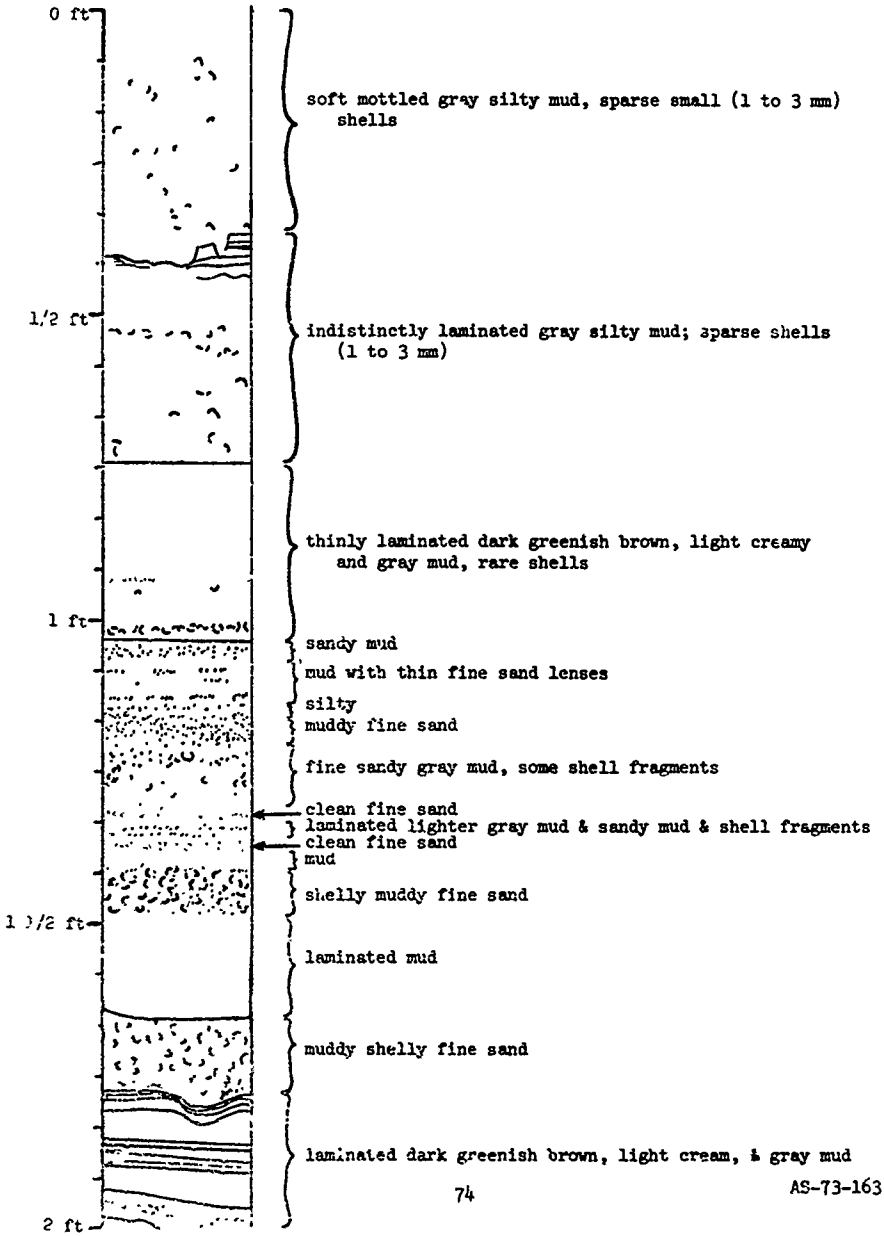

AS-73-163

GEOLOGICAL DESCRIPTION OF CORE
Core 22 Baffin Bay, Texas, August 1972
Sheet 2 of 4

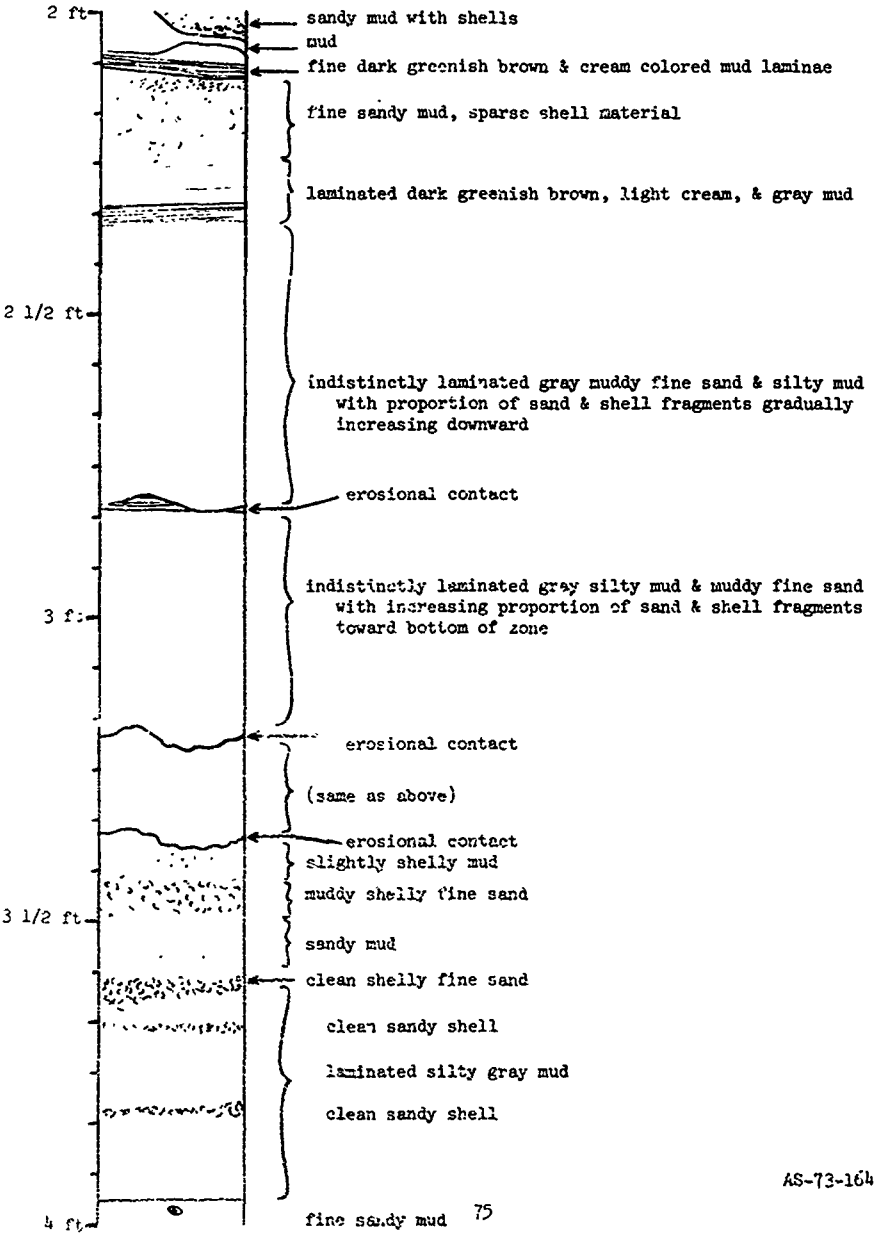

AS-73-164

GEOLOGICAL DESCRIPTION OF CORE
Core 22 Baffin Bay, Texas, August 1972
Sheet 3 of 4

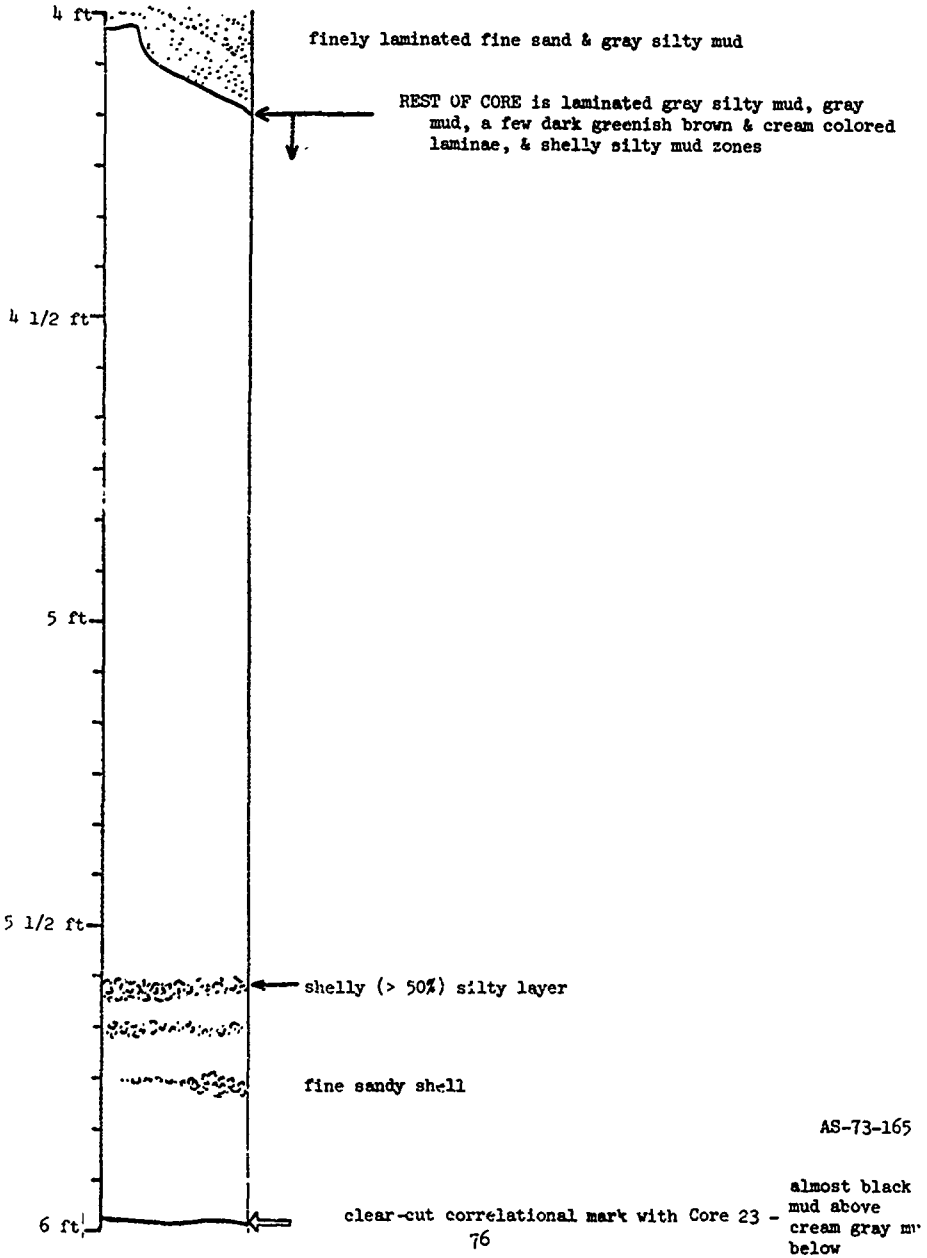

GEOLOGICAL DESCRIPTION OF CORE
Core 22 Baffin Bay, Texas, August 1972
Sheet 4 of 4

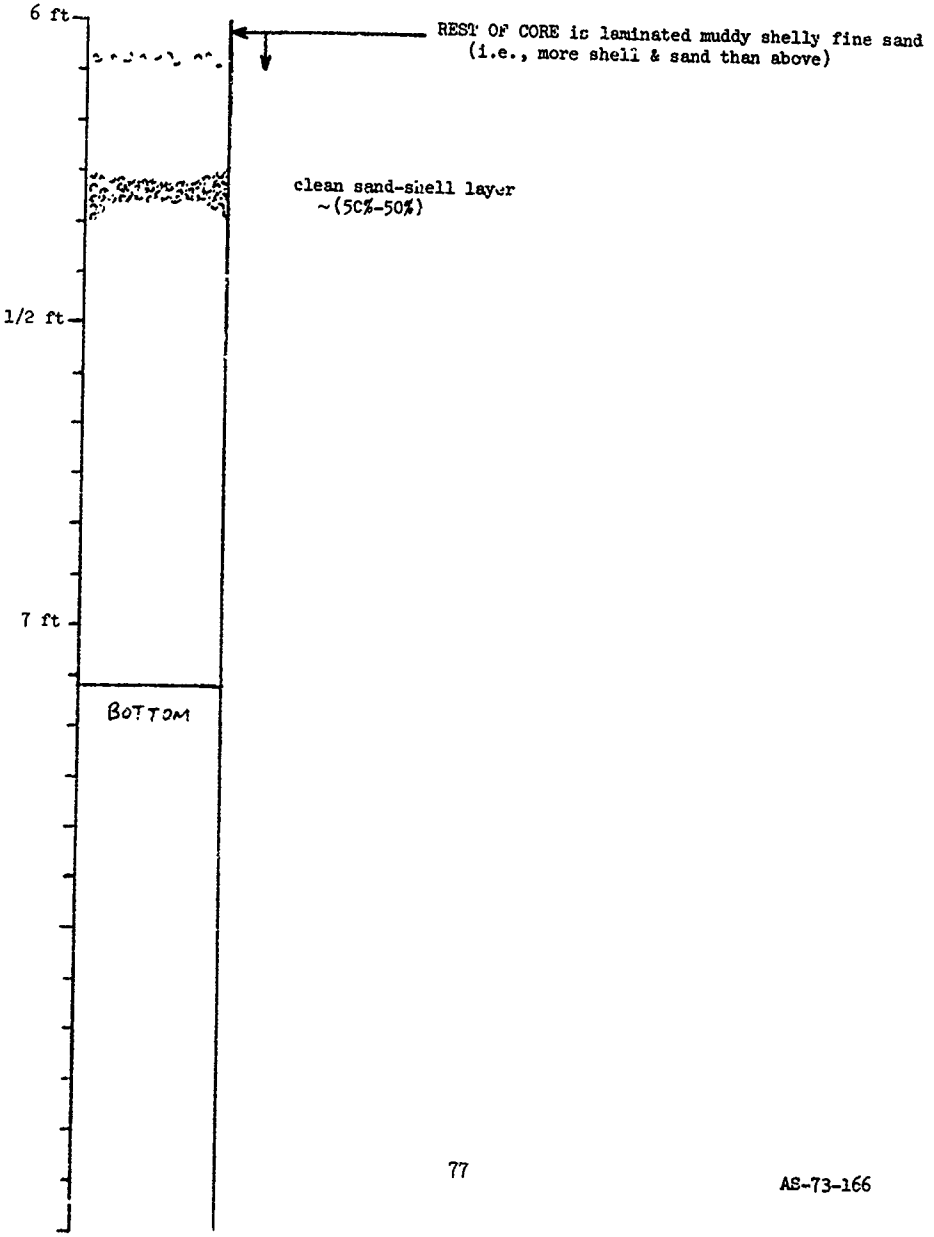

AS-73-166

GEOLOGICAL DESCRIPTION OF CORE
Core 23 Baffin Bay, Texas, August 1972
Sheet 1 of 4

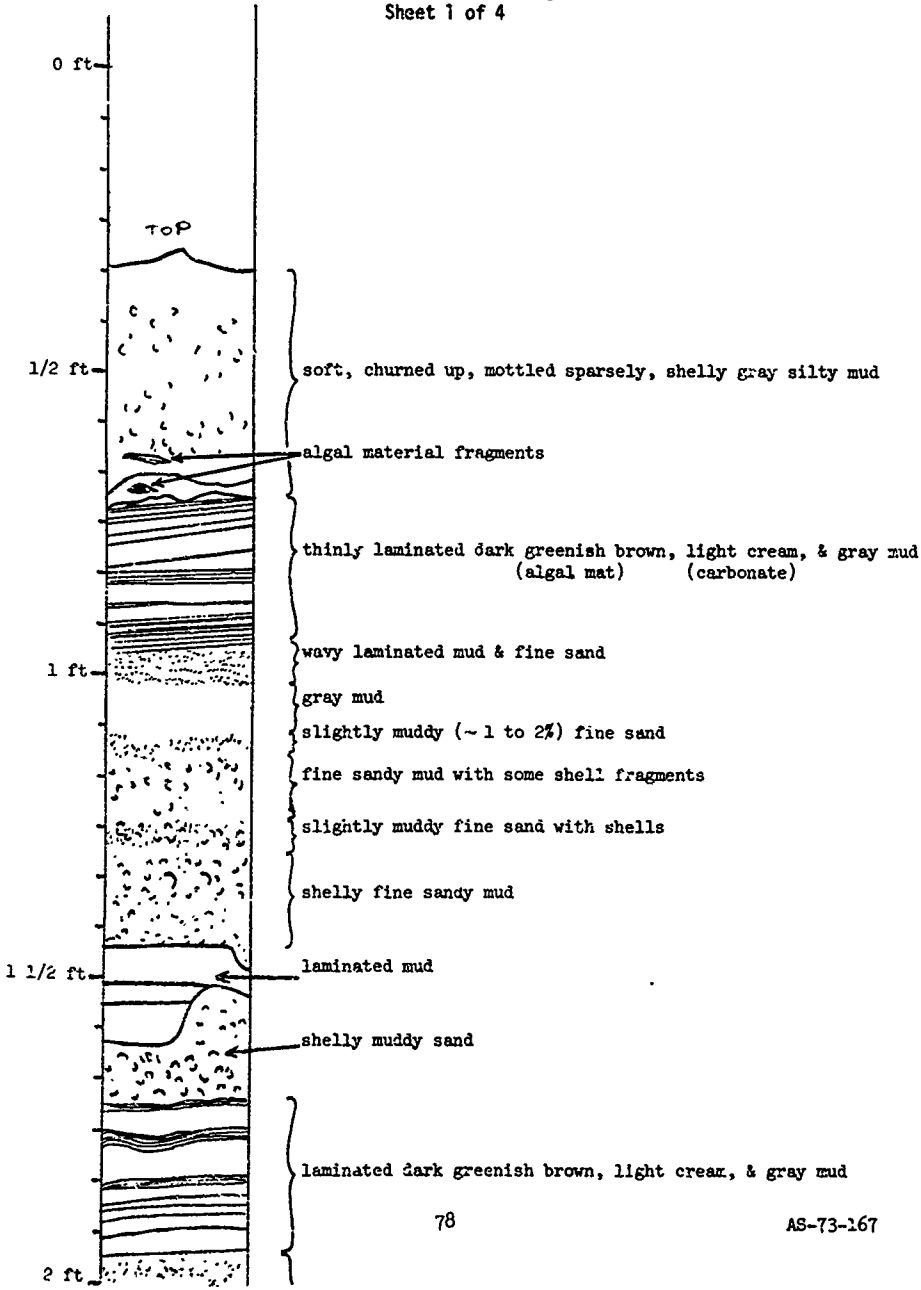

AS-73-167

GEOLOGICAL DESCRIPTION OF CORE
Core 23 Baffin Bay, Texas, August 1972
Sheet 2 of 4

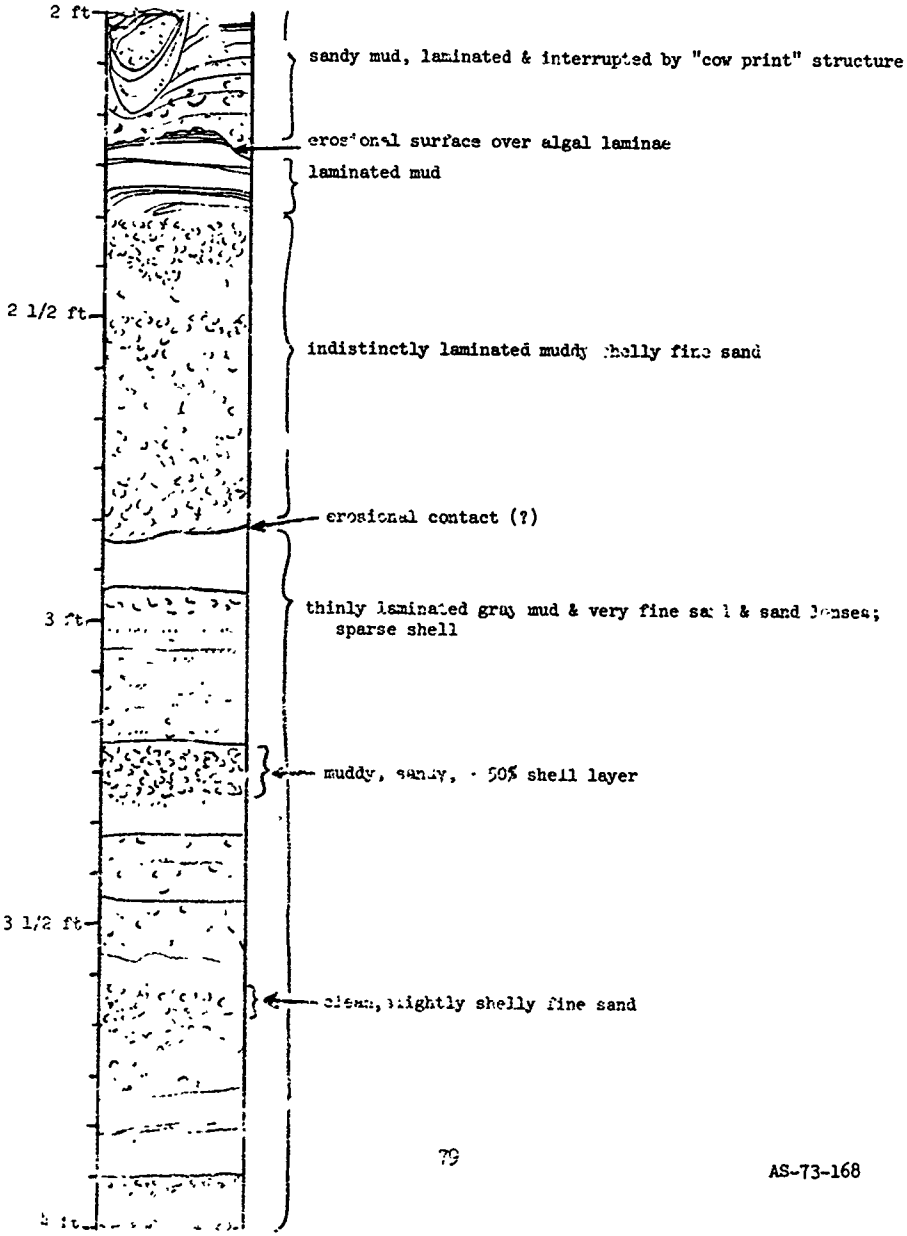

AS-73-168

GEOLOGICAL DESCRIPTION OF CORE
Core 23 Baffin Bay, Texas, August 1972
Sheet 3 of 4

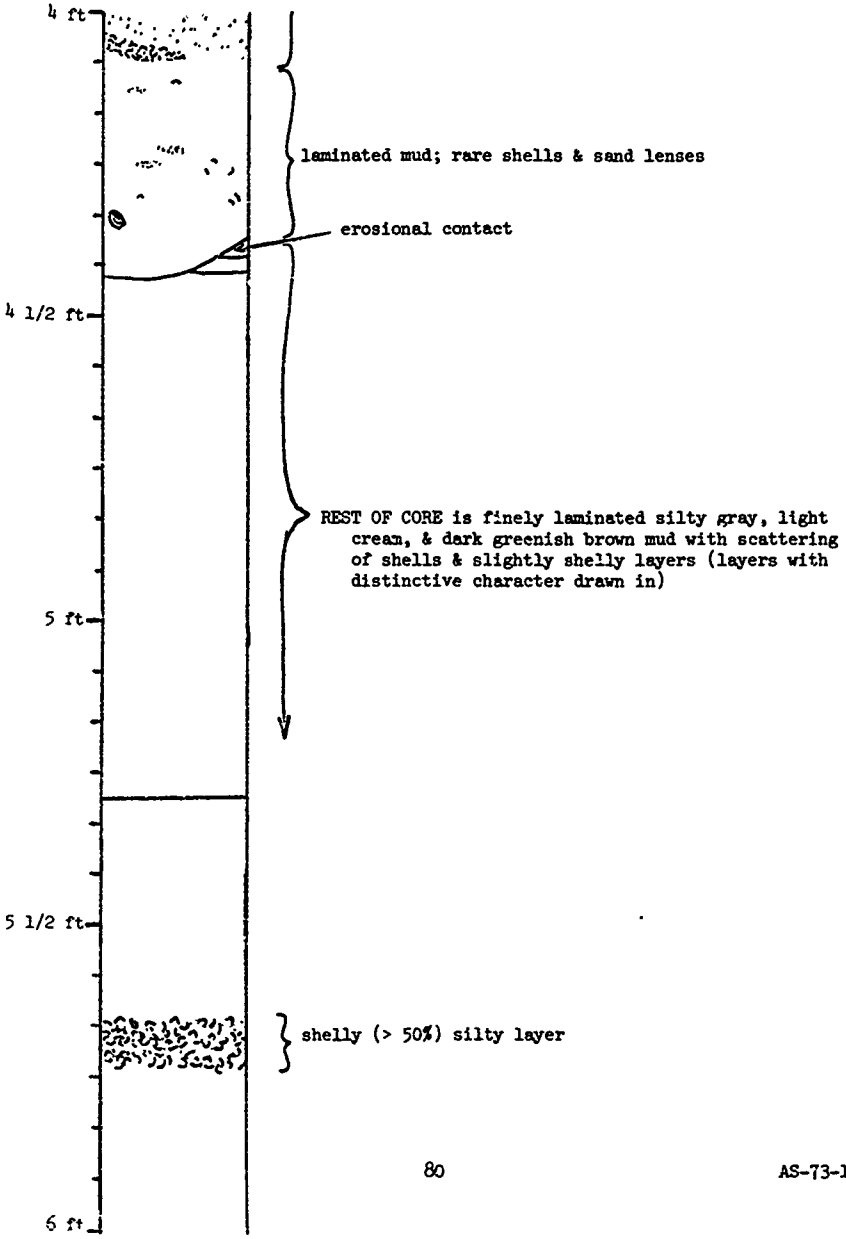

AS-73-169

GEOLOGICAL DESCRIPTION OF CORE
Core 23 Baffin Bay, Texas, August 1972
Sheet 4 of 4

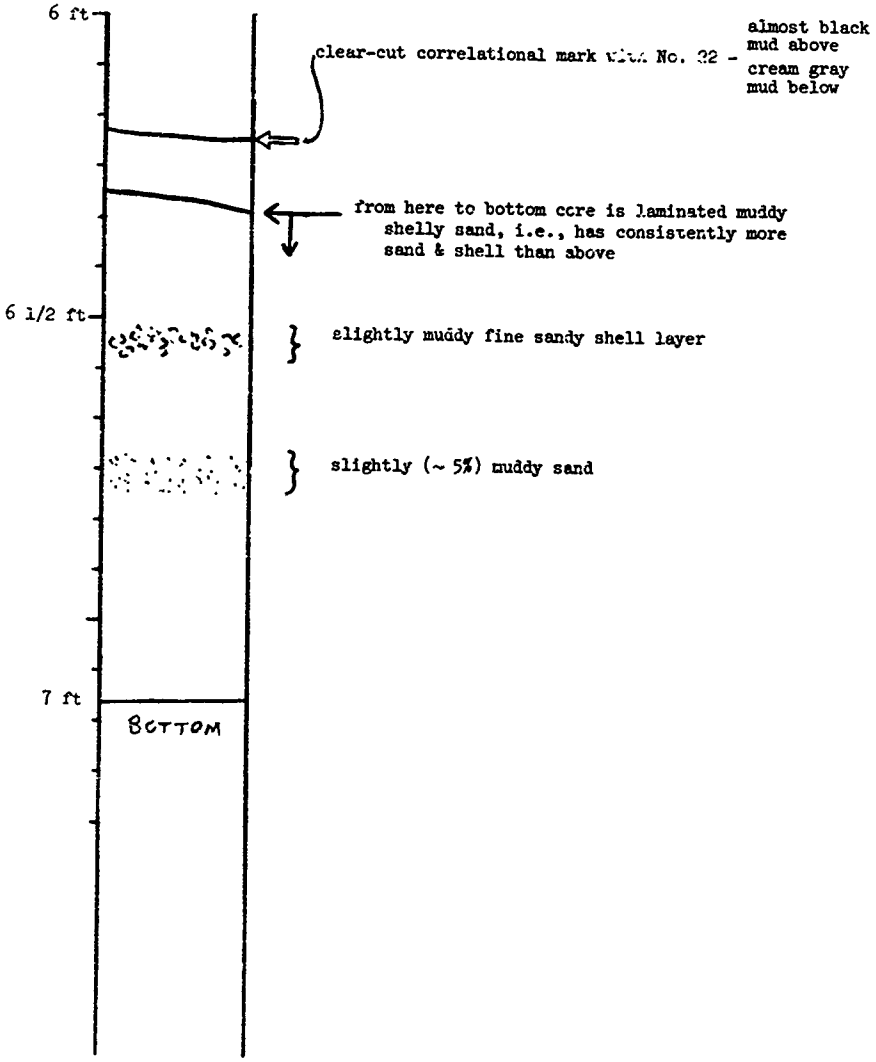

AS-73-170

GEOLOGICAL DESCRIPTION OF CORE
Core 2 Redfish Bay, Texas, May 1972
Sheet 1 of 2

ENTIRE CORE is mottled, churned up muddy fine sand with broken shell material scattered throughout; hard dime store modeling clay consistency. There is a nearly smooth gradation in grain size composition from top to bottom--from slightly muddy (~ 1%) at top to ~ ≥ 50% and ≤ 50% sand at bottom--although some small variations do occur. "Shellyness" is fairly uniform throughout, mostly consisting of 1 to 4 mm fragments, but with a few whole small shells (~ 5 to 10 mm). The drawing is completed only for top 1 ft to show approximate shell density (≈ 1%). Color is slightly greenish slate gray, brownish in upper foot or so.

AS-73-171

GEOLOGICAL DESCRIPTION OF CORE
Core 2 Redfish Bay, Texas, May 1972
Sheet 2 of 2

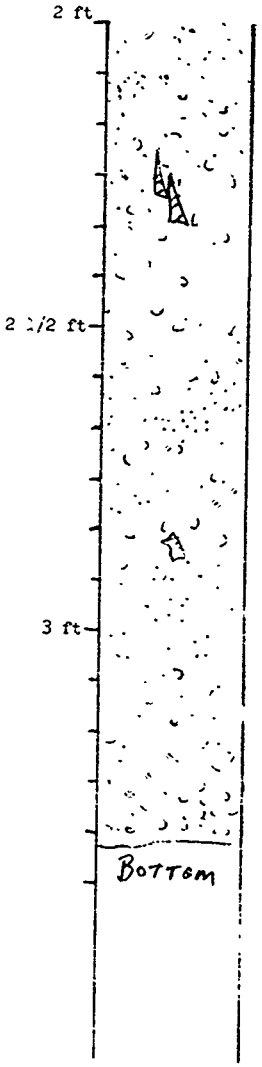

AS-73-172