AD-758 640

A 5 MV RADIAL INSULATOR ELECTRON GUN FOR AN ELECTRON RING ACCELERATOR

J. J. Condon, et al

Naval Research Laboratory
Washington, D.C.

March 1973

DISTRIBUTED BY:

NTIS

National Technical Information Service
U. S. DEPARTMENT OF COMMERCE
5285 Port Royal Road, Springfield Va. 22151

NRL Memorandum Report 2569

A 5 MV Radial Insulator Electron Gun for an Electron Ring Accelerator

AD 758640

J. J. CONDON AND W. H. LUPTON

Plasma Physics Division

March 1973

NATIONAL TECHNICAL
INFORMATION SERVICE

DDC
RECEIVED
APR 24 1973
B

NAVAL RESEARCH LABORATORY
Washington, D.C.

Approved for public release; distribution unlimited.

24

UNCLASSIFIED

Security Classification

DOCUMENT CONTROL DATA - R & D

(Security classification of title, body of abstract and indexing annotation must be entered when the overall report is classified)

1. ORIGINATING ACTIVITY *(Corporate author)* Naval Research Laboratory Washington, D.C. 20390	2a. REPORT SECURITY CLASSIFICATION UNCLASSIFIED 2b. GROUP ---

3. REPORT TITLE

A 5 MV RADIAL INSULATOR ELECTRON GUN FOR AN ELECTRON RING ACCELERATOR

4. DESCRIPTIVE NOTES *(Type of report and inclusive dates)*

Interim report on a continuing problem.

5. AUTHOR(S) *(First name, middle initial, last name)*

J. J. Condon and W. H. Lupton

6. REPORT DATE March 1973	7a. TOTAL NO. OF PAGES 24	7b. NO. OF REFS 6
8a. CONTRACT OR GRANT NO NRL Problem H02-28 and H01-36 b. PROJECT NO. c. d.	9a. ORIGINATOR'S REPORT NUMBER(S) NRL Memorandum Report 2569 9b. OTHER REPORT NO(S) *(Any other numbers that may be assigned this report)*	

10. DISTRIBUTION STATEMENT

Approved for public release; distribution unlimited.

11. SUPPLEMENTARY NOTES	12. SPONSORING MILITARY ACTIVITY Office of Naval Research Department of the Navy Arlington, Virginia 22217

13. ABSTRACT

A massive radial insulator is considered as an approach for a stable mounting of a vacuum diode electron gun and connection to a 5-MV, 70-Ω, oil dielectric pulse generator. A rationale for determining the electric field permitted without breakdown along the insulator-vacuum interface is presented. The electric field along this interface and on the center conductor is determined by numerical solutions of Laplace's equation for specific models. A dished head and field shaping collar make it possible to operate a 4.5 ft. diameter insulator at 5 MV. The rise-time due to the shunt capacitance of the electron gun is calculated to be 13 ns. A proposal is made to design and construct such a radial insulator from cast nylon. An external magnetic field must be used to prevent vacuum breakdown and limit the current from the cathode stalk. The electron gun impedance cannot be calculated at this time.

DD FORM 1 NOV 65 1473 (PAGE 1)

S/N 0101-807-6801

UNCLASSIFIED

Security Classification

UNCLASSIFIED

Security Classification

14 KEY WORDS	LINK A ROLE	LINK A WT	LINK B ROLE	LINK B WT	LINK C ROLE	LINK C WT
Accelerators						
Electron gun						
Electron beams						
Vacuum insulation						

DD FORM 1 NOV 65 1473 (BACK)

(PAGE 2)

UNCLASSIFIED

Security Classification

CONTENTS

Abstract i
Problem Status i
Authorization i

I. INTRODUCTION 1

II. RATIONALE FOR DETERMINING THE ELECTRIC FIELD APPLIED TO THE RADIAL INSULATOR 2

III. ELECTROSTATIC FIELD CALCULATIONS 2

IV. SHUNT CAPACITANCE AND RISE-TIME 7

V. ELECTRIC FIELDS ON CENTER CONDUCTOR 17

VI. CONCLUSION 19

REFERENCES 20

I. INTRODUCTION

An electron ring accelerator being developed as a cooperative project between the University of Maryland and the Naval Research Laboratory [1] requires an electron gun to inject a short, high-current pulse of 5 MeV electrons into the accelerator. The electron beam will be initiated by a circular field - emission cathode which is pulsed to a negative potential of 5 MV. The annular beam is then guided out of the electron gun region along an externally imposed axial magnetic field. The electron gun structure must provide a vacuum envelope and cathode support with electrical insulation sufficient to withstand the 5 MV pulse and with means of connection of the cathode and return current to the coaxial transmission line pulse generator.

High-voltage pulsed electron beam diodes usually have insulators made with a series of shaped lucite rings coaxial with a cylindrical cathode support rod. This approach was first employed at AWRE [2] and has since been the design basis for all high-current electron beam generators. The hold off voltage is optimized by having the vacuum interface surface of the lucite rings cut at the proper angle with respect to the axis. The lucite rings are sealed by "O" rings to metal disc separators and the assembly is held in compression by exterior tie rods. Such a cylindrical insulator capable of withstanding 5 MV would be 3 feet long with the cathode supported by a stalk with a length equal to the insulator length plus any needed extension into the magnetic field.

For the electron ring accelerator experiment it is certainly desirable and maybe even mandatory that the cathode maintain precise alignment with respect to the magnetic field axis of the balance of the accelerator. An attempt to provide locating pins or rings to improve the positioning stability of a ring insulator assembly would introduce sharp edges with the possibility of electrical breakdown within the plastic. In addition the long cathode stalk makes the cathode more susceptible to motion from transmitted vibration. It appears that the degree of mechanical precision and stability required is not easily possible by the lucite ring approach. This report describes the development of an alternate design approach taken to provide a shorter and more rigid cathode stalk mounting.

In the alternate approach the desired rigidity and mechanical stability is obtained with an insulator made from a single very thick piece of plastic to be mounted radially between inner and outer conductors of the coaxial transmission line pulse generator. This insulator will be located as close as possible to the grounded metal tank forming the remainder of the diode vacuum chamber. The shortened cathode stalk is supported from the center of this massive insulator. In addition to mechanical stability and means for integrating this diode with the rest of the accelerator, the electrical design features

which must be considered are the hold off voltage of the insulator and the pulse rise time limitation imposed by shunt capacity.

II. RATIONALE FOR DETERMINING THE ELECTRIC FIELD APPLIED TO THE RADIAL INSULATOR

In the work which led to the AWRE insulator design, I. D. Smith[2] measured the flashover voltage of conical frustra of lucite placed between paralled plates under vacuum. The maximum voltage was obtained when the half-angle of the cone was about 45°. J. D. Shipman[3] has calculated the equipotential surfaces for a one inch high 45° lucite frustrum which should flashover at 450 kV with a 30 ns pulse. He finds that at a distance of 2 mm away from the anode, the local field corresponding to flashover is 370 kV/cm and makes an angle of 47° with respect to the insulator surface. From this result he hypothesized that it may be possible to avoid flashover on any lucite-vacuum interface if the maximum local field is kept below 370 kV/cm and the angle of this field with respect to the insulator surface is 50° or greater.

Shipman has used this hypothesis in the design of a radial insulator for an electron beam diode wherein the maximum field is 370 kV/cm at an angle of 82° when the applied potential is 1.7 MV. This insulator has been operated satisfactorily at 1.6 MV with a 50 ns pulse.

To provide a reasonable lifetime the working voltage and fields should be somewhat less than the value corresponding to breakdown. The appropriate factor is unknown. However a factor of 70 percent has been found satisfactory for situations involving liquid dielectric breakdown. If that factor is arbitrarily used in this situation, the field should be held to 260 kV/cm.

Radial insulators have also been made of nylon and operated at lower voltages. Other laboratories have evidence for small samples indicating that well dried nylon may be as good as lucite.[4]

In the design of the radial insulator electron gun diode the conducting surfaces of the vacuum chamber and cathode mount will be arranged so that the maximum field in the vacuum at the insulator surface is less than 260 kV/cm and makes an angle of greater than 45° with respect to the insulator surface. In regions where the field makes an angle of less than 45° the field will be made as low as practical and if the field becomes parallel to the insulator its value there will be less than 40 kV/cm corresponding to 70 percent of the flashover field reported by I. D. Smith for that case.[2]

III. ELECTROSTATIC FIELD CALCULATIONS

The electrical characteristics of the diode are determined from calculations of the electric potential in the operating diode. These are obtained with a computer code developed by J. E. Boers[5] and extended by J. D. Shipman which calculates the potentials for problems

with cylindrical symmetry. For this code the r-z plane is divided into a matrix of square cells with the surfaces of conductors and dielectric interfaces constrained to lie along the edges of these cells. The computer calculates the potential at each matrix point (corresponding to the cell corners) and also plots equipotential surfaces in the r-z plane. The results of these calculations are used primarily to determine the magnitude and direction of the electric field across the vacuum interface of the radial insulator. They are also used later to determine the shunt capacitance and electric fields at critical points on conductor surfaces.

A radial insulator placed between the inner and outer conductors of a coaxial transmission line will have an electric field parallel to the surface. The field can be made to intercept the surface at an angle if either the inner or outer conductor is made a cone. Fig. 1 shows a conceptual layout of a diode with a 5-inch thick radial disc insulator placed between a pair of conical surfaces. The diode is shown connected to a 70-Ω , oil dielectric transmission line with a 28-inch radius outer conductor and a 5-inch radius inner conductor. The 4-inch diameter cathode and cathode stalk form the center conductor of a 16-inch diameter vacuum coaxial line to be placed within a magnetic field coil. The wall of the vacuum chamber between the coaxial section and the outer edge of the insulator constitutes one of the conical surfaces. The collar shown attached to the center conductor of the 70-Ω line generator provides the other conical surface. In this preliminary layout the diameter of the collar is arbitrarily made half that of the 70-Ω line. Fig. 2 shows a plot of the equipotential surfaces for this diode geometry. The approximation of the conical conductors by a stepped surface coincident with computer cell edges is evident. The matrix cell length is 1/3 inch. For this and subsequent calculations the dielectric constant of the oil is taken as 2.2 and that of the plastic insulator as 2.75. (This latter value is between the values of 2.6 for lucite and 3.0 for nylon). The electric field intensity and its angle with respect to the dielectric-vacuum interface is determined from the potential differences between adjacent matrix points along the interface. The intensity and angle as a function of radial distance from the center of the diode are shown in Fig. 3. Although the angle is greater than 60° throughout the high field region the maximum value of the intensity is 290 kV/cm at a radius of 9 inches.

In the tentative diode geometry of Fig. 1 the field intensity at the insulator surface exceeds the allowable value of 260 kV. It will be reduced by moving the wall of the vacuum chamber further away from the insulator in subsequent calculations. In addition this conductor will be shaped to approximate the dished head which would actually be used there to withstand the pressure difference with minimum deflection. The inner conductor geometry is also changed to more closely approximate the form that would be used in fabrication. The conical collar of Fig. 1 is replaced by a 45° cone leading from the 2 inch radius cathode shank to a 4 2/3 inch radius center conductor

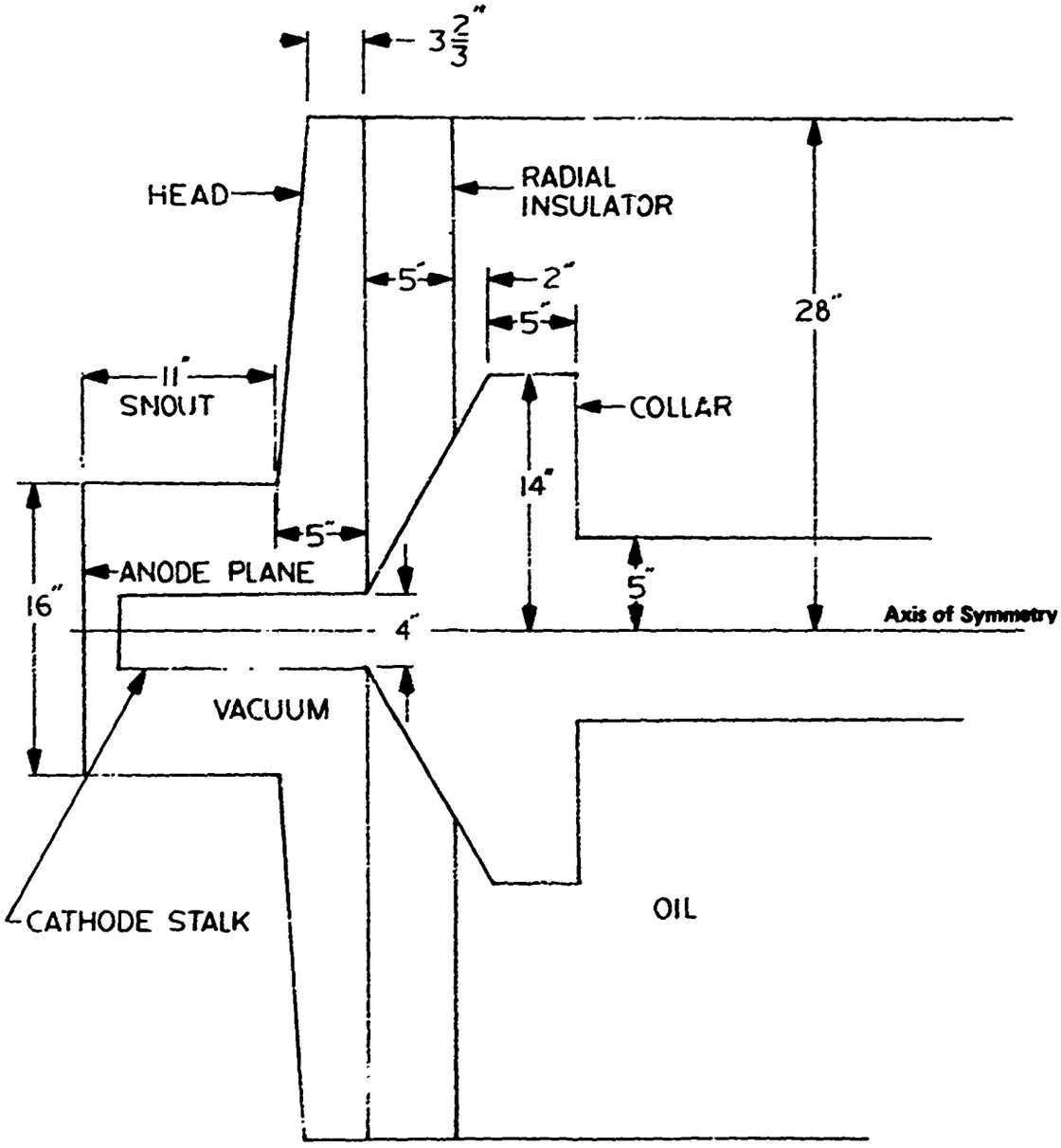

Fig. 1 - Schematic layout for a radial insulator for connecting a vacuum diode to an oil-dielectric high-voltage pulse generator (Model D2H)

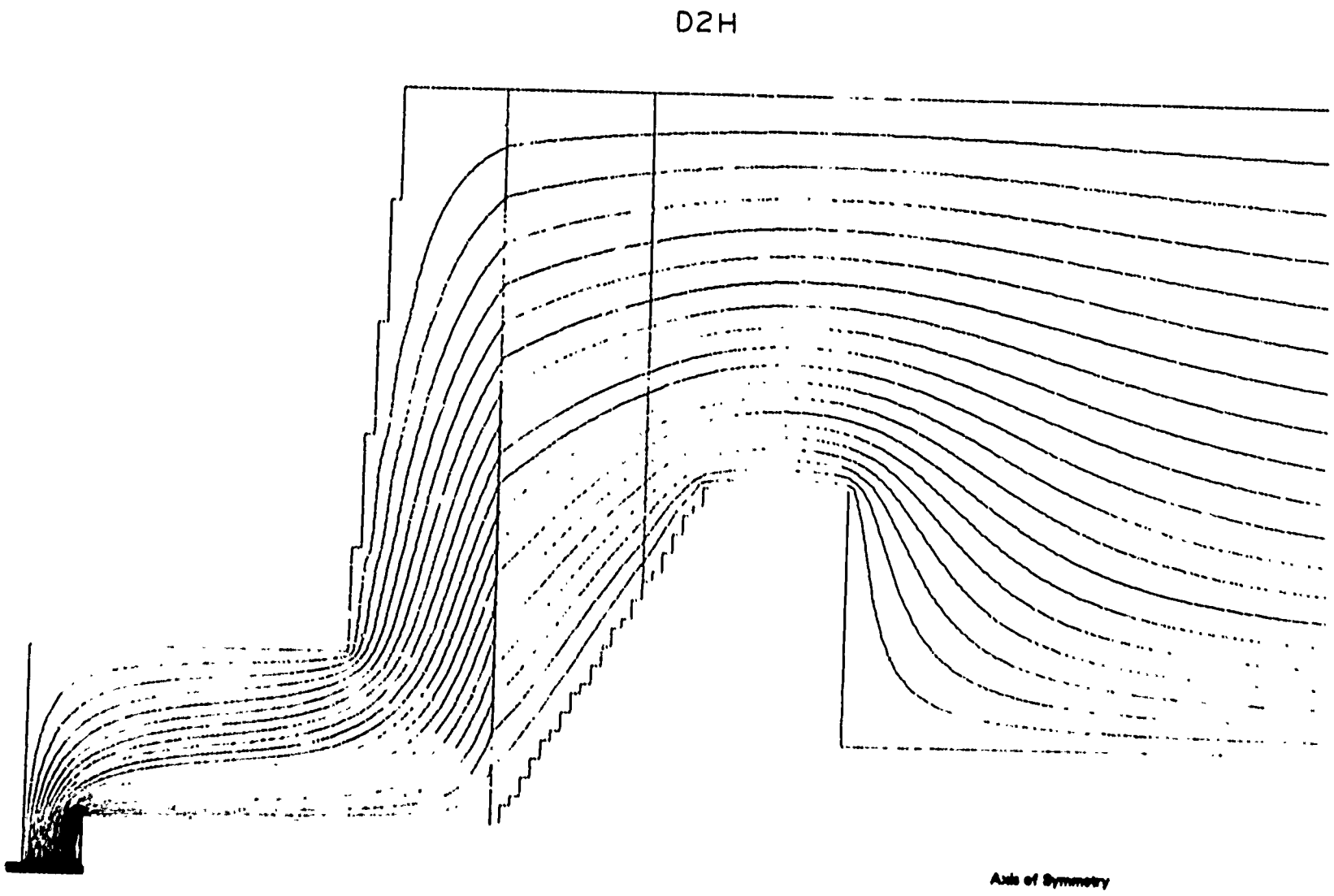

Fig. 2 - Equipotential surfaces for Model D2H in RZ plane

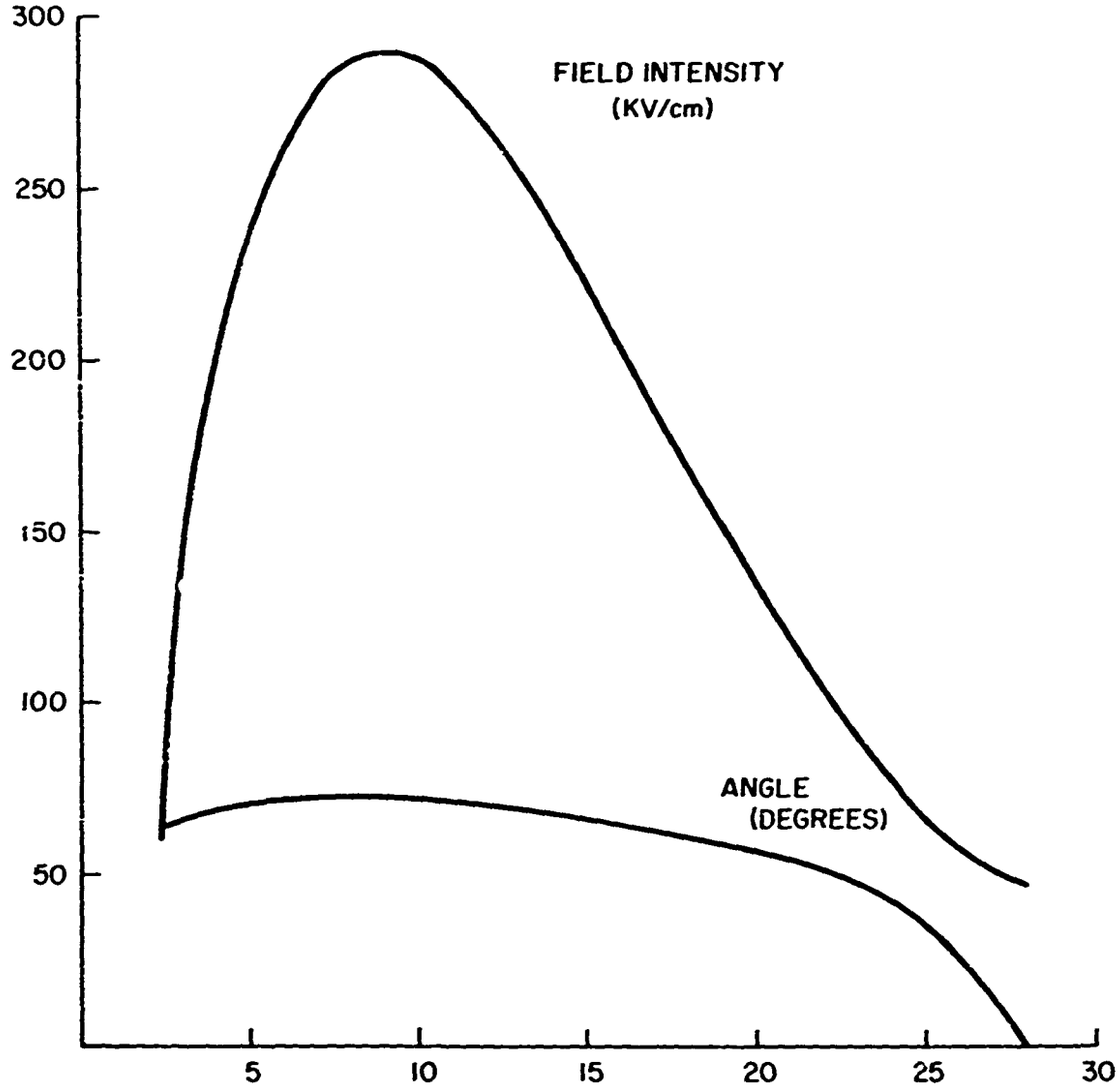

Fig. 3 – Dependence of electric field intensity and angle on radial distance from diode axis for Model D2H

of the pulse generator. Attached to this center conductor is a collar or field shaping disc 2 inches thick and spaced 2 inches away from the oil-insulator interface. The radius of the outer conductor and insulator is reduced to 27 inches for the next computer calculation (D2J) and to 26 1/3 inches for the remaining ones.

The distance from the grounded metal vacuum wall to the insulator and the radius of the field shaping disc are varied in the four computer calculations listed in Table 1 to determine their influence on the electric field at the surface of the insulator.

Table 1

Computer Calculations for Dished Head Radial Insulator Diode

Computer Run Number	Vacuum Chamber Spacing	Field-Shaping Collar Height
D2J	11"	10"
D2JA	8 1/3"	10"
D2JB	8 1/3"	12"
D2JC	10 2/3"	12"

Plots of the equipotential surfaces for these four cases are shown in Figures 4, 6, 8, and 10. The field intensity along the insulator-vacuum interface and its angle with respect to the interface are plotted in Figures 5, 7, 9, and 11.

From these four calculations it is seen that increasing the spacing between the dished head and the insulator decreases the maximum field but also decreases the angle. In the case D2J the angle at the maximum field point does not exceed 45° by a comfortable margin. Increasing the radius of the field shaping collar results in a more uniform distribution of field across the insulator surface with a decrease in the maximum value. The angle of the field with respect to the insulator is also increased with the larger field shaping disc. However the field at the outer edge of the insulator where the angle goes to zero is increased to greater than the 40 kV/cm allowable.

IV. SHUNT CAPACITANCE AND RISE-TIME

The electrostatic capacitance between the cathode stalk and the grounded, dished-head vacuum wall and that between the field shaping collar and the outer tank wall appear as shunt capacitances in parallel

D2J

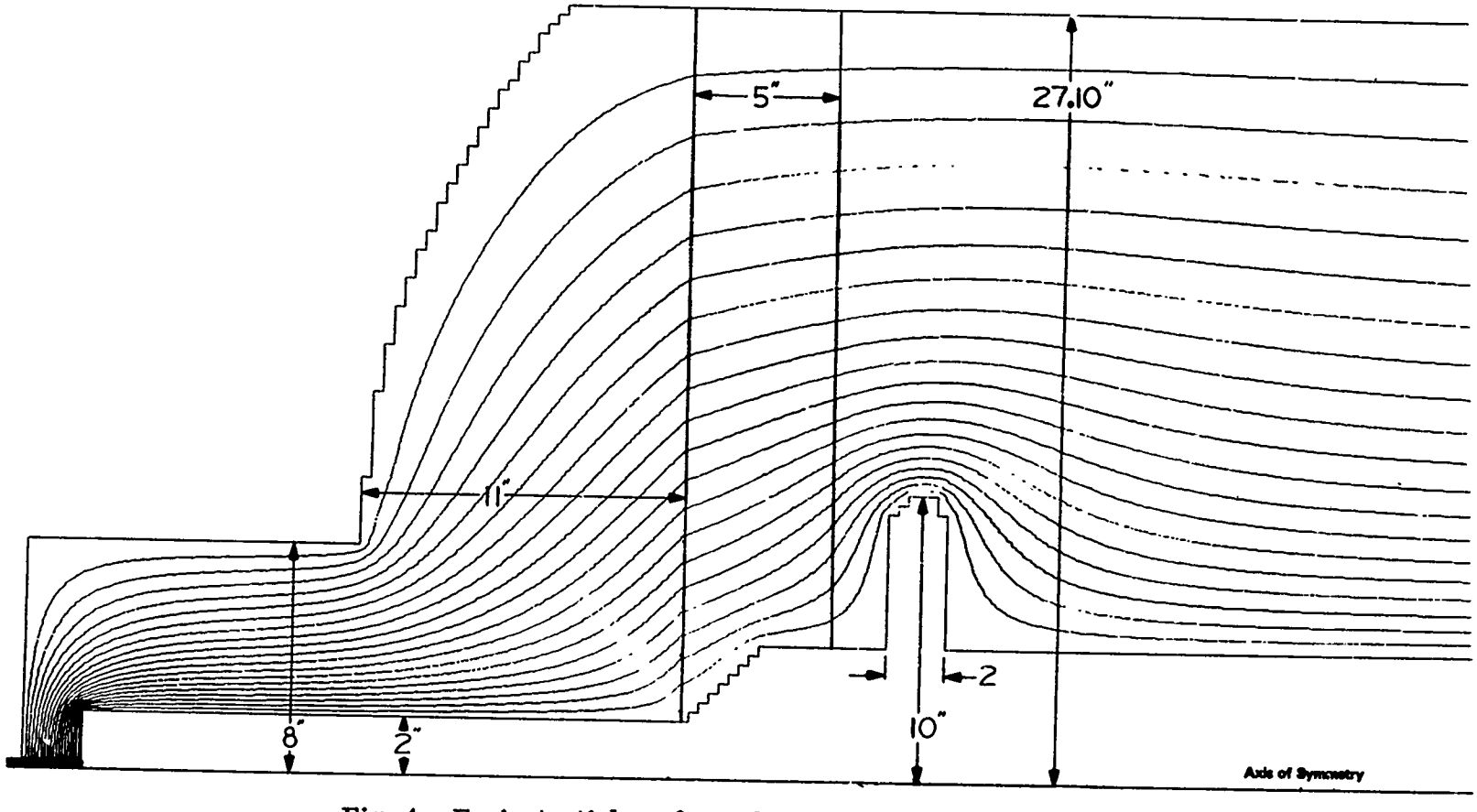

Fig. 4 - Equipotential surfaces for Model D2J in RZ plane

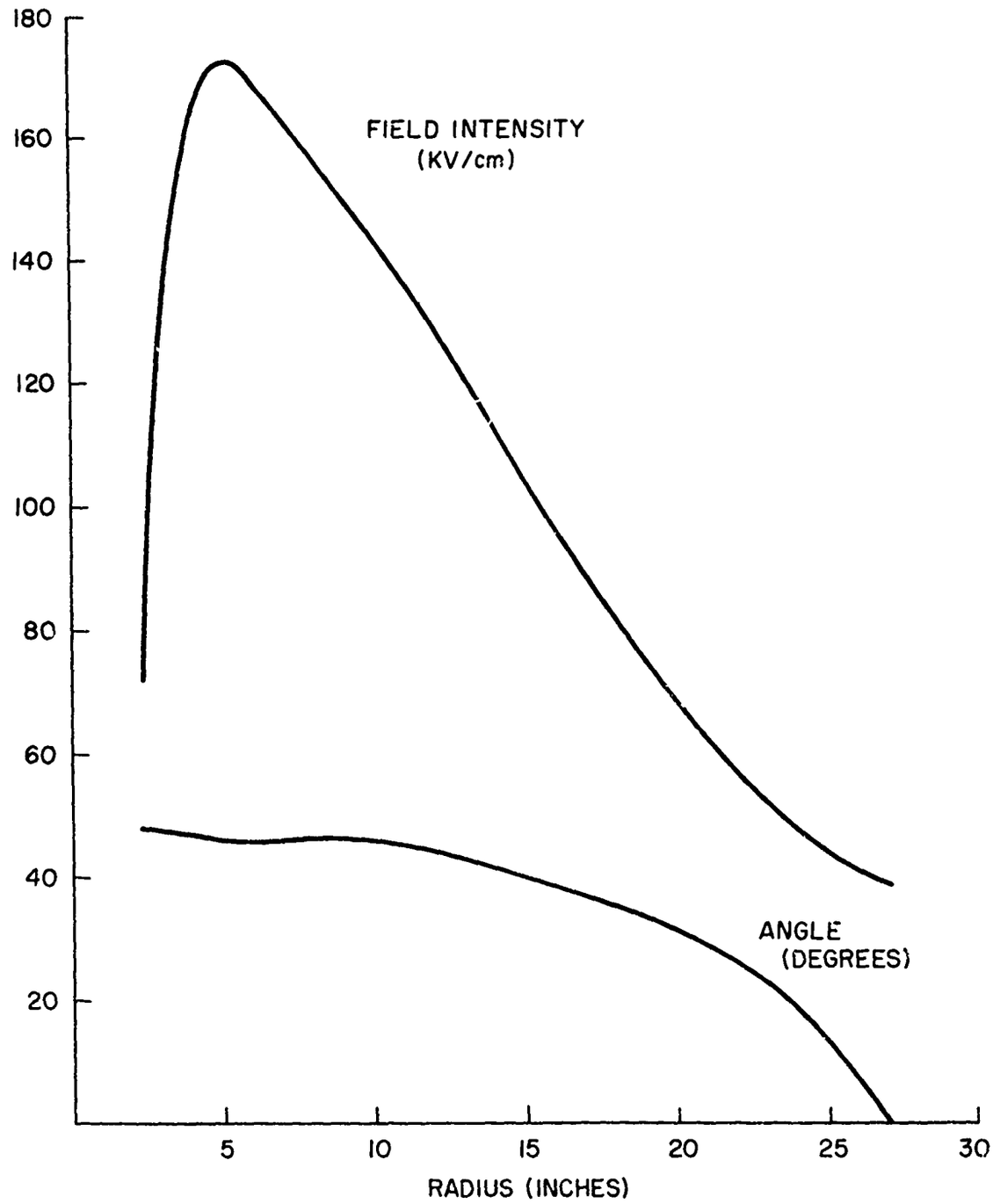

Fig. 5 - Dependence of electric field intensity and angle on radial distance from diode axis for Model D2J

D2JA

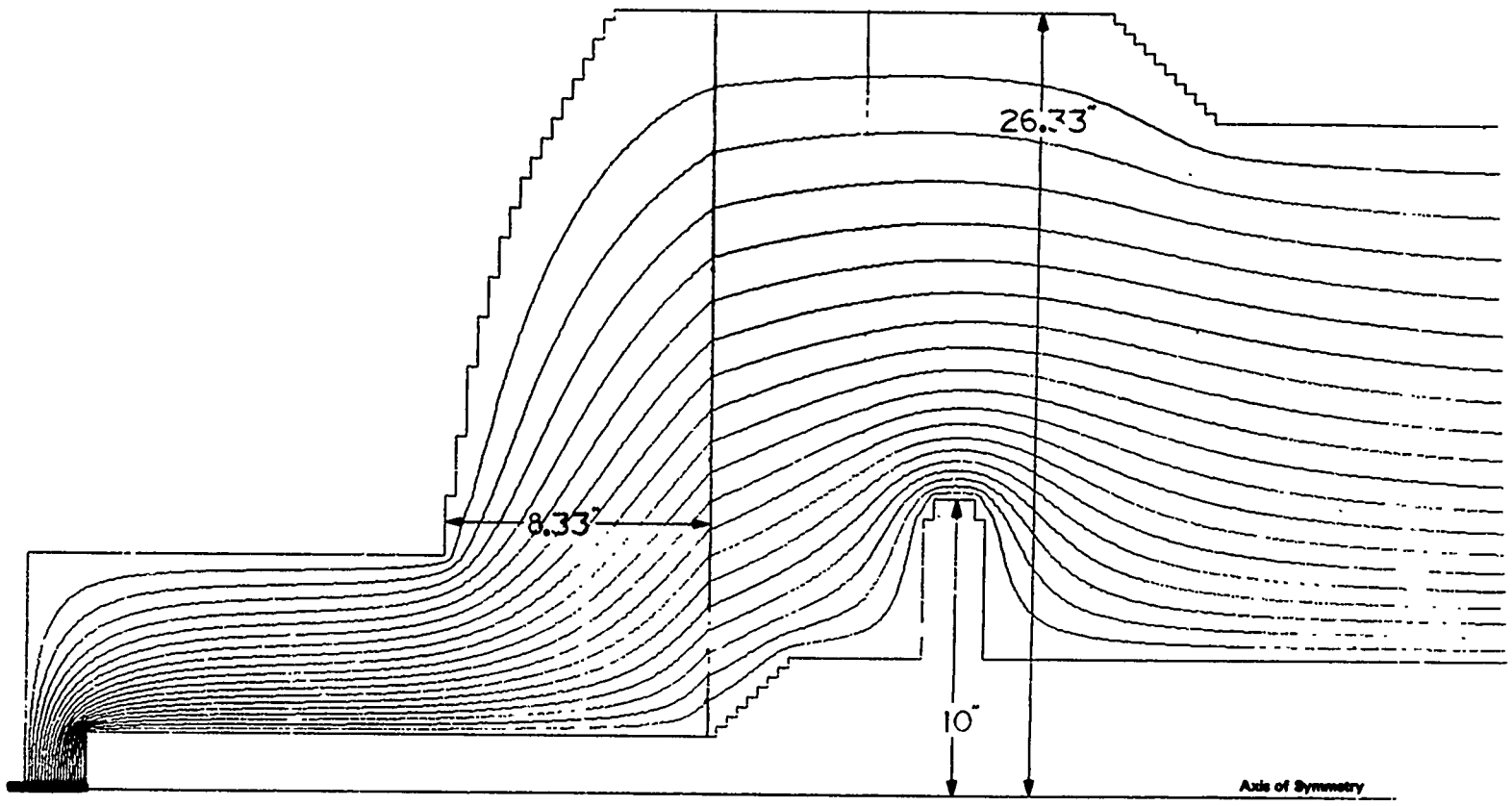

Fig. 6 - Equipotential surfaces for Model D2JA in RZ plane

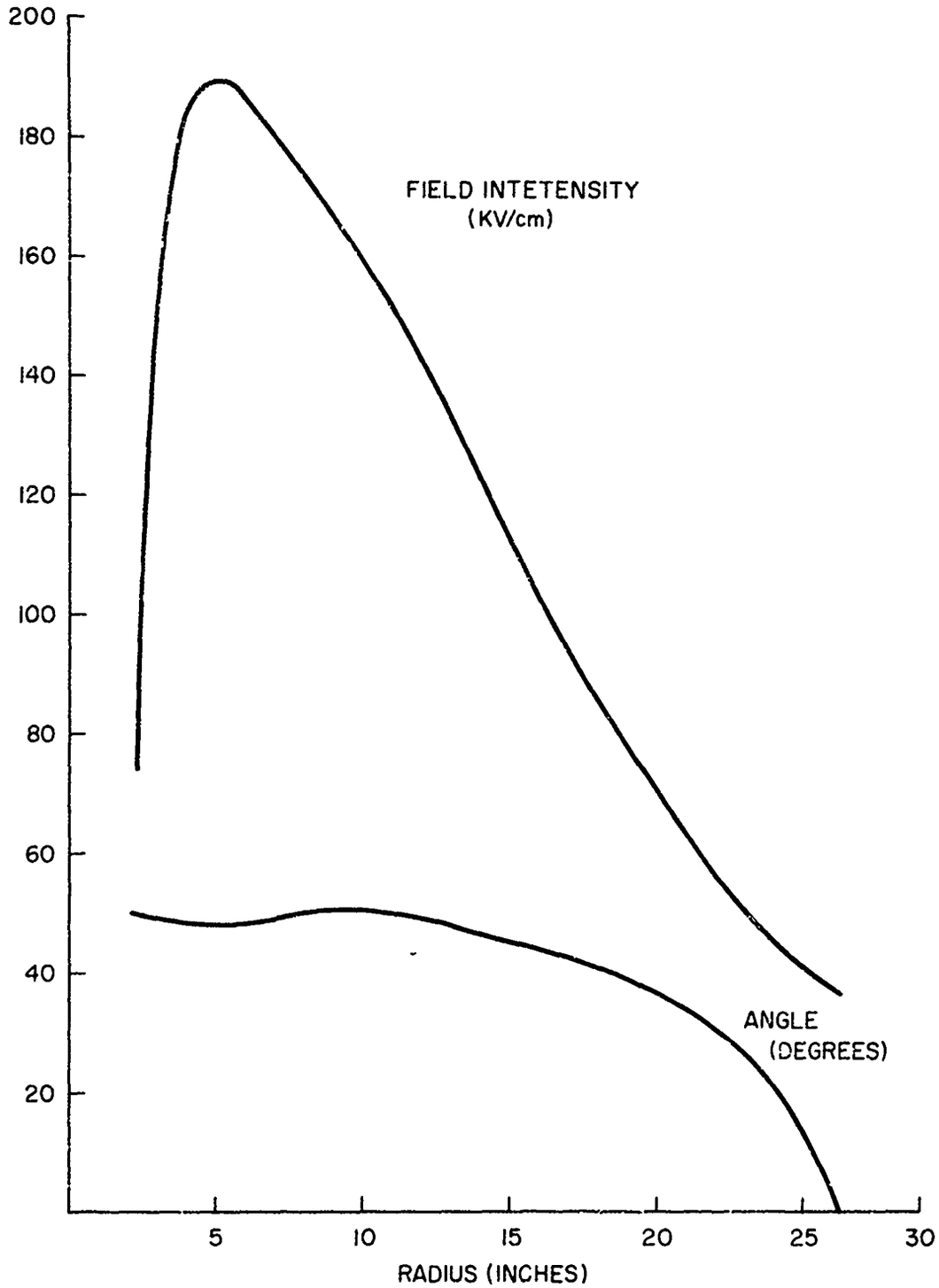

Fig. 7 - Dependence of electric field intensity and angle on radial distance from diode axis for Model D2JA

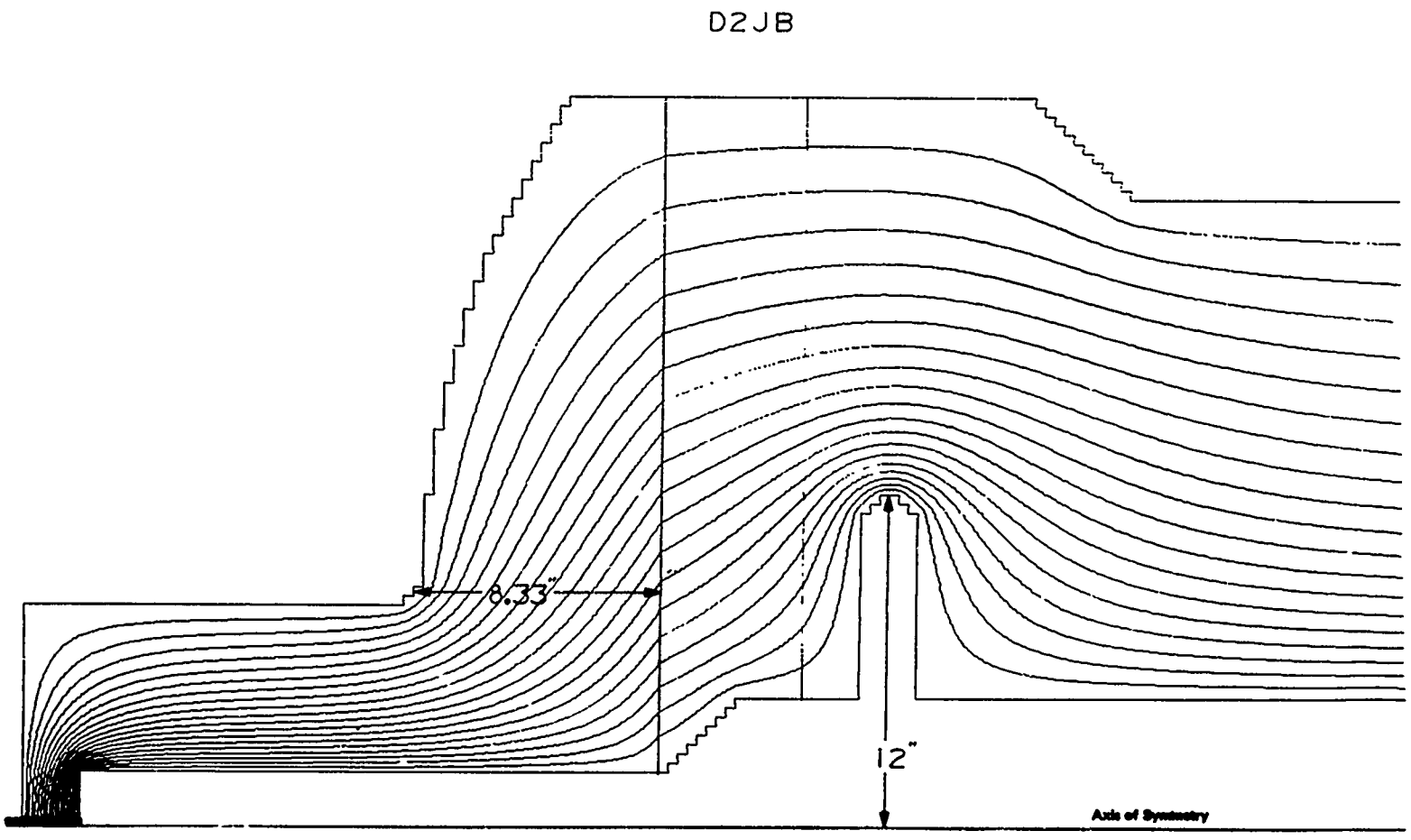

Fig. 8 - Equipotential surfaces for Model D2JB in RZ plane

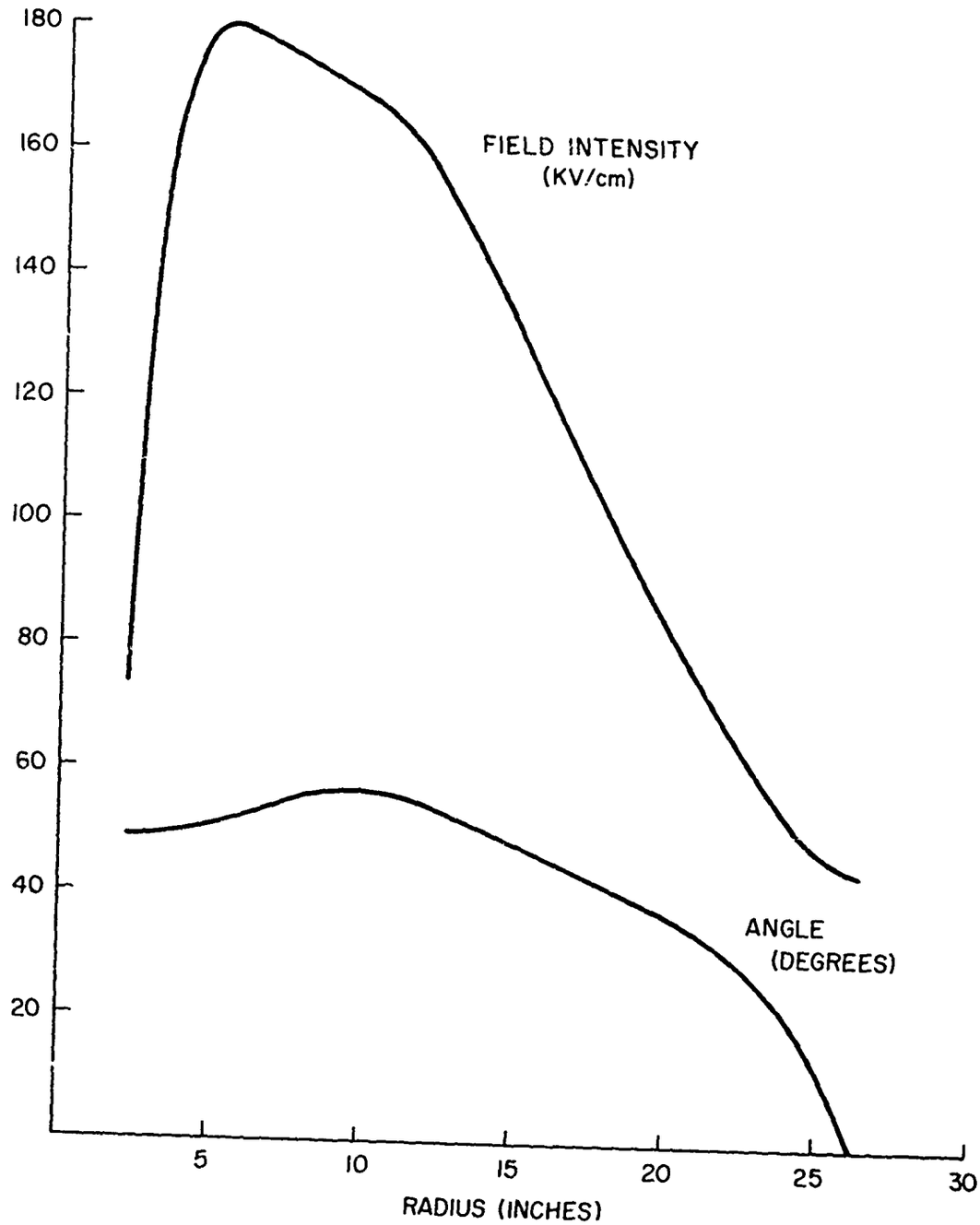

Fig. 9 - Dependence of electric field intensity and angle on radial distance from diode axis for Model D2JB

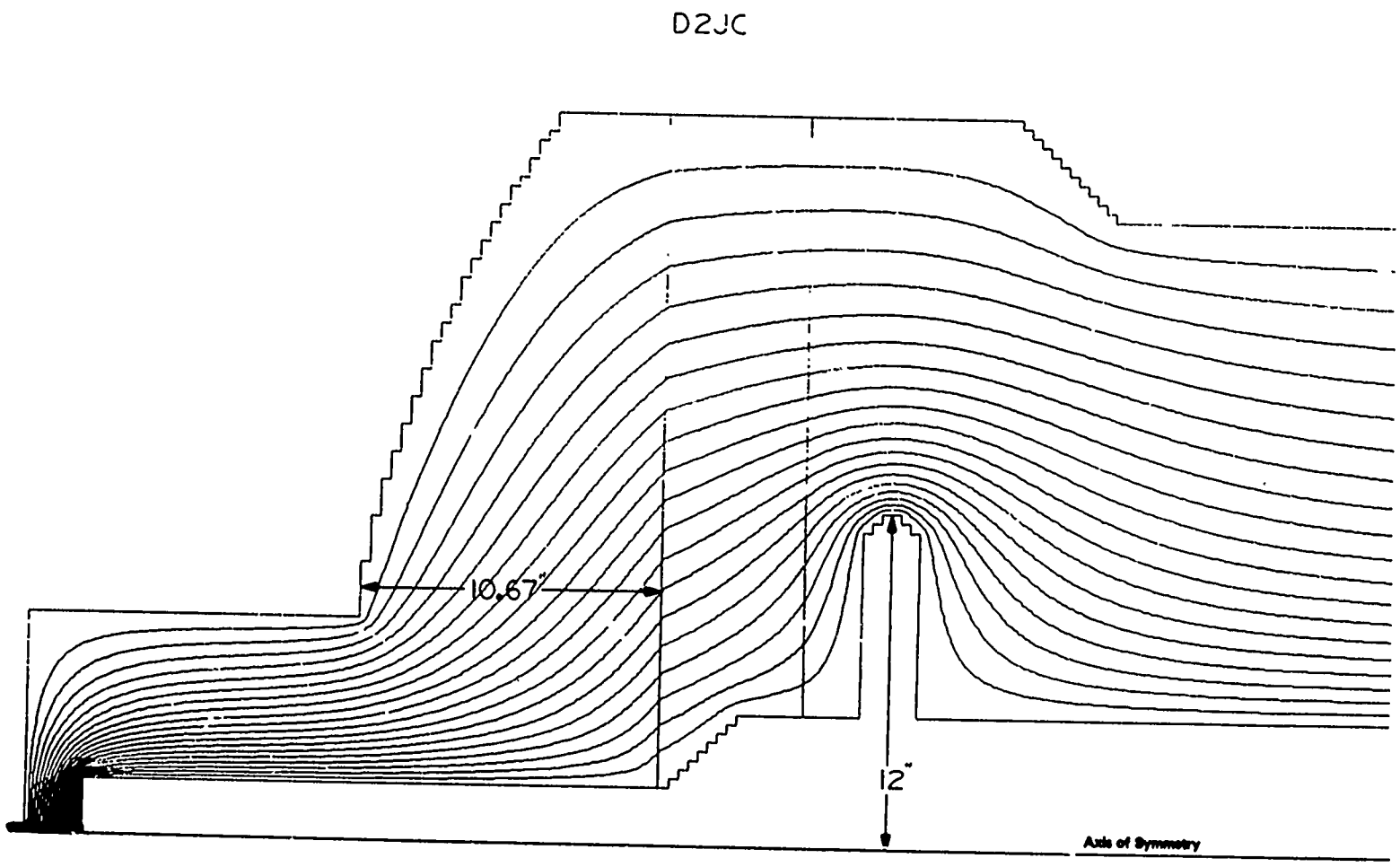

Fig. 10 - Equipotential surfaces for Model D2JC in RZ plane

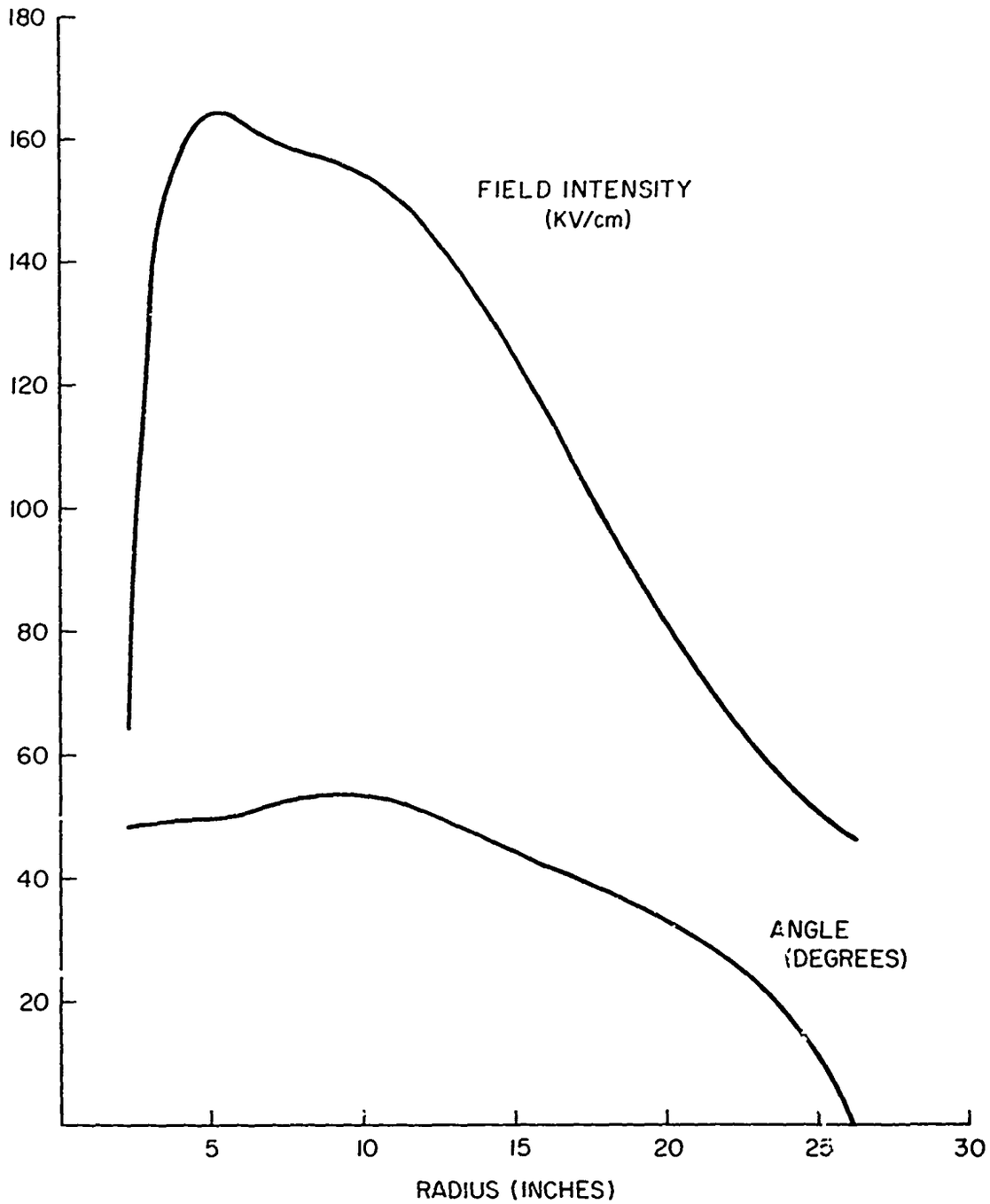

Fig. 11 - Dependence of electric field intensity and angle on radial distance from diode for Model D2JC

with the generator output. The electrical pulse from the generator must charge up this capacitance in order for voltage to appear across the electron beam diode load. The time-constant for the open-circuit charging of this capacitance, C, is just Z_oC where Z_o is the output impedance of the generator. For low impedance generators (Z_o=1 to 10 Ω) or for those cases where a short rise-time is not needed the charging time of this shunt capacitance is negligible. For the electron gun being considered here the generator impedance is 70 Ω and a rise-time as short as 10 ns is desirable. Therefore this capacitance must be made as small as possible consistent with a satisfactory electric field distribution on the insulator.

The shunt capacitance is given by the relation C=Q/V where Q is the charge on either the inner or outer conductor and V is the potential difference between them. The surface charge density on the surface of the outer conductor is $Q_s = \epsilon E$. Where ϵ is the permittivity of the dielectric adjacent to the surface and E is the electric field intensity at the surface. For the possible diode geometries just considered the field at each matrix point on the outer conductor can be obtained from the computer calculated potentials. The capacitance is then

$$C = \frac{2\pi}{V} \Delta \sum_j \epsilon_j E_j r_j$$

where E_j is the field intensity at the jth matrix point with radius r_j, Δ is the length of a side of a matrix cell (Δ =1/3 in.=0.846x10^{-2}m), and ϵ_j is the permittivity of the dielectric in the jth cell. The capacitances for each of the insulator configurations of Table 1 have been calculated by the above formula with the summation extending over the outer conductor from the point where the dished head joins the vacuum coaxial transmission line to a point in the oil dielectric 15 inches beyond the insulator. The results of these calculations are presented in Table 2.

Table 2. Shunt Capacitance and Rise-Time

Computer Run Number	Calculated Capacitance	10% - 90% Rise-Time
D2J	58.5 pF	11.8 ns
D2JA	57.5	11.6
D2JB	67.7	13.2
D2JC	67.5	13.2

The capacitance of an 11 inch section of vacuum coaxial line terminating in a 4 inch diameter plane cathode with cathode-to-anode spacing of 2 inches was calculated to be 14.6 pF from run D2J. This capacity added to the value tabulated for each of the above configurations will give the approximate diode shunt capacity. The open-circuit, 10%-90% rise-time ($2.3\ Z_oC$) is also given in Table 2.

V. ELECTRIC FIELDS ON CENTER CONDUCTOR

Electric field intensities at points on the surface of the center conductor can be estimated from the computer calculations as differences of the calculated potentials. Two regions of importance are the periphery of the field-shaping collar where enhanced field can result in breakdown and along the surface of the cathode shank where field emission may occur.

The field on the periphery of the collar must be kept below the threshold for breakdown of the oil dielectric. The field strength for breakdown of transformer oil is given by J. C. Martin[6] based on the results of numerous tests at A.W.R.E. as

$$F = \frac{0.5}{t^{\frac{1}{3}} A^{0.1}}$$

where F is the breakdown field in MV/cm, t is the effective time in μsec, and A is the electrode area in cm^2. For the 24 inch diameter field-shaping collar the vulnerable area is about 1500 cm^2. The breakdown field strength corresponding to a pulse duration of 0.02 μsec is 890 kV/cm. Satisfactory operation is expected if the field is no greater than 70% of breakdown or 620 kV/cm.

The computer runs used to determine the insulator fields do not give an accurate value for the field on the collar because its circular cross-section is not well approximated by a conductor constrained to lie along the edges of six matrix cells. In the configuration of D2JA the peripheral region of the collar was magnified 8-fold so its cross-section has a width of 48 matrix cells and results in a better approximation to the curved conductor. The field obtained was 600 kV/cm. By comparing the relative fields at the collar for the unmagnified cases, one obtains a field of 600 kV/cm on the periphery of the 10 inch collars and a field of 620 kV/cm on the 12 inch collars.

If the electric field at the surface of the stalk supporting the cathode is sufficiently high field emission will result in electron flow in the vacuum region which is not useful for the ring accelerator. The superimposed axial magnetic field must be sufficiently strong so that these electrons cannot immediately strike the opposite conductor and initiate a vacuum arc. Even then these unwanted electrons represent a load on the generator which decreases the beam voltage.

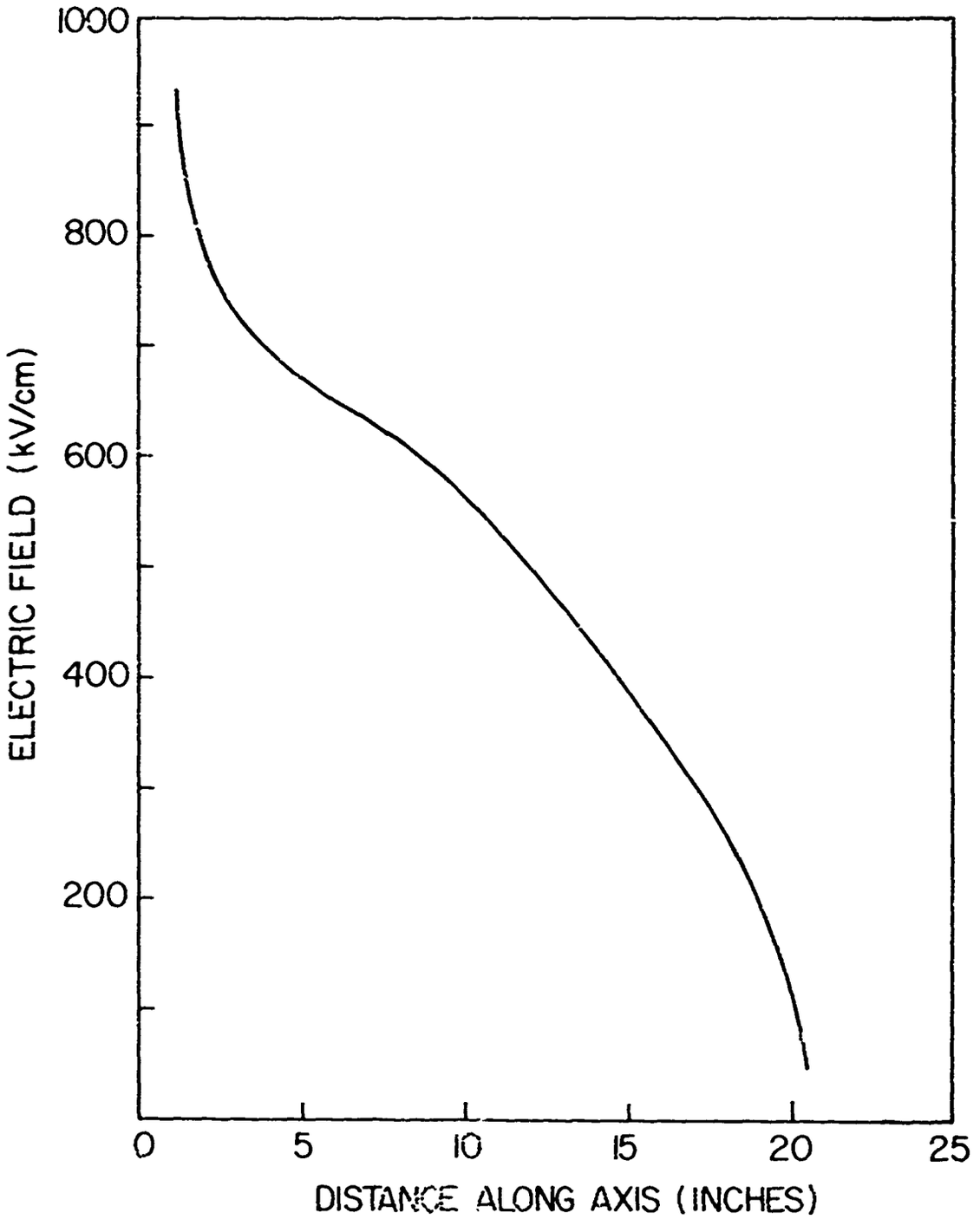

Fig. 12 - Electric field intensity as a function of the axial distance along the shank measured from cathode for Model D2J

If the 4-inch diameter cylindrical shank and 16-inch diameter surrounding conductor were infinite in extent the radial field at the shank would be 710 kV/cm. The axial magnetic field required to produce magnetron cut-off of a radial beam in this geometry is 0.2 T.

Field strengths at the surface of the four-inch diameter cathode stalk have been obtained from the computer potential calculations for the configuration D2J. Figure 12 shows this electric field as a function of the axial distance along the shank from the cathode. The computer calculation confirms the nominal value of 710 kV/cm but the axial variation indicates a considerable departure from a radial field. The magnetron cut-off model is thus not applicable for determining the space charge flow in the axial magnetic field. It appears advisable to attempt to reduce the extraneous current by reducing the surface electric field as much as practical. The field strength required to produce significant field emission is unknown and depends on finish, vacuum, and treatment of the conductor surface. An increase in diameters of the shank and its return conductor can be made so that the surface field will be less than 500 kV/cm over most of the length of the shank. The very high field strength in the section near the cathode will have to be reduced by rounding the support in this region.

VI. CONCLUSION

Numerical calculations of the electrostatic potential on a 4.5 ft. diameter radial insulator operating at 5 MV have shown that it is possible to keep the maximum electric field strength below 200 kV/cm. The angle of the field with respect to the insulator surface is greater than 50° in the high field region. Under these conditions a 20 ns pulse should not result in insulator flashover. A 24-inch diameter field shaping collar gives a better distribution of field and increased angle than is obtained with a 20-inch collar. Although the larger collar has a higher shunt capacitance, the estimated rise-time of 13 ns is considered adequately short.

With the larger collar the field intensity is more than 40 kV/cm at the outer edge of the insulator. The flange connecting the outer part of the insulator to the dished head must be designed with an internal radius of curvature so that the field always makes a positive angle with respect to the insulator.

MC901 cast nylon is in the group of materials which Milton[4] found to have the highest vacuum-flashover voltages and appears to have the best mechanical properties for construction of this insulator. A 5 in. thick piece has the strength to withstand the pressure difference, the rigidity to provide stability to the cathode stalk and the toughness to tolerate an electrical breakdown without complete mechanical failure. Therefore a radial insulator will be designed and constructed from cast nylon for an electron gun with a dished head and collar configuration close to those of D2JB or D2JC.

The cathode supporting stalk and return current conductor can be dimensioned to reduce surface electric fields to approximately 500 kV/cm. Field emission from the stalk is likely and an axial magnetic field must be used to limit the current. The geometry is not amenable to treatment by any simple model so the stalk current and loading of the pulse generator cannot be estimated at this time. Further research is needed on this aspect of the electron gun design problem.

REFERENCES

1. M. Reiser "The University of Maryland Electron Ring Accelerator Concept", IEEE Transactions NS-18, 460 (1971).

2. I. D. Smith, "Pulse Breakdown of Insulator Surfaces in a Poor Vacuum", Proceedings of International Symposium on Insulation of High Voltages in Vacuum, 261 (1964).

3. J. D. Shipman, "New Electron Beam Envelopes for Gambles I & II", DNA Meeting for Review and Planning in Simulation, Jan. 1971.

4. O. Milton, "Pulsed Flashover of Insulators in Vacuum", Sandia Corp. Report SC-DC-70-5459.

5. J. E. Boers and R. T. Kouzes "Digital Computer Solution of Laplace's Equation Including Dielectric Surfaces", Sandia Corp. Report SC-RR-69 (1969).

6. J. C. Martin "Nanosecond Pulse Techniques", AWRE Note SSWA/JCM/704/49.