AD-758 359

COLLISION PROTECTION FOR THE ARCTIC SURFACE EFFECT VEHICLE

William E. Gilbert

Naval Ship Research and Development Center

Prepared for:

Advanced Research Projects Agency

February 1973

DISTRIBUTED BY:

NTIS

National Technical Information Service
U. S. DEPARTMENT OF COMMERCE
5285 Port Royal Road, Springfield Va. 22151

Report 3885

COLLISION PROTECTION FOR THE ARCTIC SURFACE-EFFECT VEHICLE

AD 758359

NAVAL SHIP RESEARCH AND DEVELOPMENT CENTER

Bethesda, Md. 20034

COLLISION PROTECTION FOR THE ARCTIC SURFACE-EFFECT VEHICLE

by

William E. Gilbert

APPROVED FOR PUBLIC RELEASE: DISTRIBUTION UNLIMITED

Reproduced by
NATIONAL TECHNICAL
INFORMATION SERVICE
U S Department of Commerce
Springfield VA 22151

STRUCTURES DEPARTMENT

RESEARCH AND DEVELOPMENT REPORT

D D C
RECEIVED
APR 13 1973
B

February 1973

Report 3885

The Naval Ship Research and Development Center is a U. S. Navy center for laboratory effort directed at achieving improved sea and air vehicles. It was formed in March 1967 by merging the David Taylor Model Basin at Carderock, Maryland with the Marine Engineering Laboratory at Annapolis, Maryland.

Naval Ship Research and Development Center

Bethesda, Md. 20034

MAJOR NSRDC ORGANIZATIONAL COMPONENTS

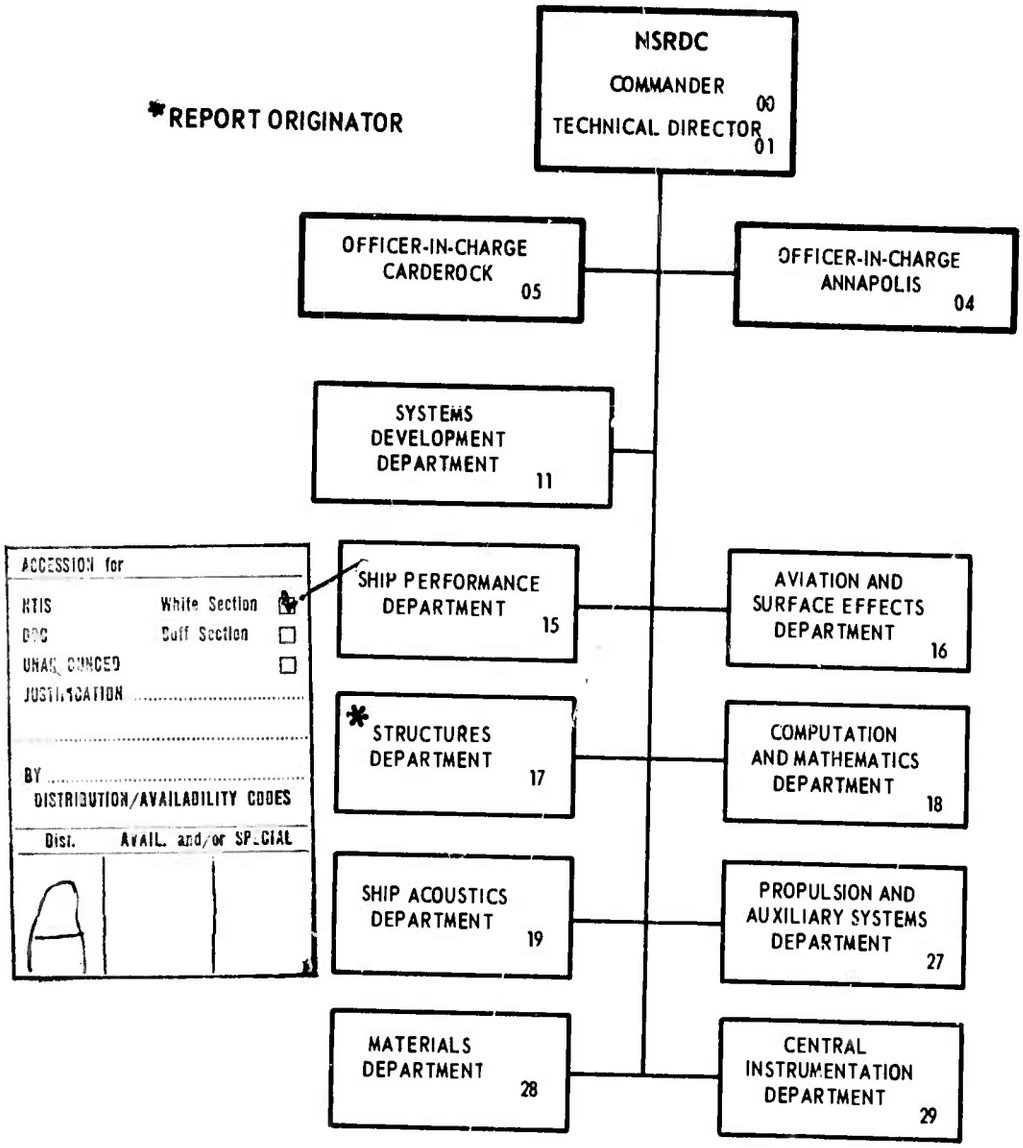

ACCESSION for
NTIS White Section ☑
DDC Buff Section ☐
UNANNOUNCED ☐
JUSTIFICATION .....
BY .....
DISTRIBUTION/AVAILABILITY CODES
Dist. AVAIL. and/or SPECIAL
A

NDW-NSRDC 3960/43b (Rev. 3-72)

GPO 928-108

UNCLASSIFIED
Security Classification

DOCUMENT CONTROL DATA - R & D

(Security classification of title, body of abstract and indexing annotation must be entered when the overall report is classified)

1. ORIGINATING ACTIVITY *(Corporate author)* Naval Ship Research and Development Center Bethesda, Maryland 20034	2a. REPORT SECURITY CLASSIFICATION UNCLASSIFIED 2b. GROUP

3. REPORT TITLE

COLLISION PROTECTION FOR THE ARCTIC SURFACE-EFFECT VEHICLE

4. DESCRIPTIVE NOTES *(Type of report and inclusive dates)*

5. AUTHOR(S) *(First name, middle initial, last name)*

William E. Gilbert

6. REPORT DATE February 1973	7a. TOTAL NO. OF PAGES 78	7b. NO. OF REFS 17
8a. CONTRACT OR GRANT NO. b. PROJECT NO. c. d.	9a. ORIGINATOR'S REPORT NUMBER(S) 3885 9b. OTHER REPORT NO(S) *(Any other numbers that may be assigned this report)*	

10. DISTRIBUTION STATEMENT

APPROVED FOR PUBLIC RELEASE: DISTRIBUTION UNLIMITED

11. SUPPLEMENTARY NOTES	12. SPONSORING MILITARY ACTIVITY Advanced Research Projects Agency

13. ABSTRACT

Collision protection is studied for the Advanced Research Projects Agency, concerning the proposed Arctic surface-effect vehicle (ASEV). The approach to collision protection is presented, and various energy absorbing concepts are investigated and evaluated for their possible use in protecting the ASEV in ice-obstacle impacts. Schemes being investigated are the air bag, foam-core sandwich panels, energy-absorbing steering columns, inverting and torsional tubes, fluid dispersal shock absorbers, and tubes which buckle inextensionally in axial compression.

DD FORM 1 NOV 65 1473 (PAGE 1)

S/N 0101-807-6801

UNCLASSIFIED
Security Classification

UNCLASSIFIED
Security Classification

14. KEY WORDS	LINK A ROLE	LINK A WT	LINK B ROLE	LINK B WT	LINK C ROLE	LINK C WT
Arctic Surface-Effect Vehicle (ASEV)						
Collision Protection for ASEV						
Air Bags for ASEV						
Foam-Core Sandwich Panels for ASEV						
Energy-Absorbing Steering Columns for ASEV						
Inverting and Torsional Tubes for ASEV						
Fluid Dispersal Shock Absorbers for ASEV						
Inextensional Buckling Tubes for ASEV						
Underbody and Extremity Structure Collision Protection						

DD FORM 1 NOV 65 1473 (BACK)
(PAGE 2)

ia

UNCLASSIFIED
Security Classification

DEPARTMENT OF THE NAVY
NAVAL SHIP RESEARCH AND DEVELOPMENT CENTER
BETHESDA, MD. 20034

COLLISION PROTECTION FOR THE ARCTIC SURFACE-EFFECT VEHICLE

by
William E. Gilbert

APPROVED FOR PUBLIC RELEASE: DISTRIBUTION UNLIMITED

This research was supported by the Advanced Research Projects Agency of the Department of Defense and was monitored by the Arctic SEV Program Office, Systems Development Department of Naval Ship Research and Development Center.

The views and conclusions contained in this document are not necessarily the official policies, either expressed or implied, of the Advanced Research Projects Agency or the U.S. Government.

February 1973

Report 3885

FOREWARD

This report contains work performed as a part of a technology study for developing a total system for operating surface-effect vehicles (SEV) in the Arctic. This includes collision protection systems (as reported herein), obstacle detection systems, and improved maneuvering and control capabilities for the overall craft.

TABLE OF CONTENTS

	Page
ABSTRACT	1
ADMINISTRATIVE INFORMATION	1
INTRODUCTION	1
EXTREMITY STRUCTURE-PROTECTION APPROACH	4
MAJOR ENERGY ABSORBING COMPONENTS	8
Air Bags	9
Foam-Core Sandwich Panels	13
Energy-Absorbing Steering Column	14
Inverting Tubes	16
Torsional Tubes	18
Fluid Dispersal Shock Absorbers	21
Thin Walled Tubes in Axial Inextensional Buckling	24
SUMMARY OF MAJOR ENERGY-ABSORBING COMPONENTS	30
LOAD DISTRIBUTION SYSTEM	32
BUMPER PROTECTION	37
UNDERBODY STRUCTURE-PROTECTION APPROACH	39
SUMMARY	40
ACKNOWLEDGMENTS	41
REFERENCES	71

LIST OF FIGURES

Figure 1 - Kinetic Energy versus Craft Velocity	42
Figure 2 - Tolerance of Man to Short-Duration Shock Motion	43
Figure 3 - Minimum Stopping Distance for Critical Acceleration Environment	43
Figure 4 - Ideal Load-Deflection Curve	44
Figure 5 - Schematic of the Extremity Structure	44
Figure 6 - Possible Configuration of Extremity Structure	45
Figure 7 - Comparison of Force-Deflection Characteristics for a Fundamental Buckling Component with the Ideal	45
Figure 8 - Air Bag as an Energy Absorber	46

Page

Figure 9 - Influence of Adiabatic Phase on Load-Deflection Curve for an Air Bag 46

Figure 10 - Adiabatic Compression in a Sample Gas-Filled Bag 47

Figure 11 - Foam-Core Sandwich Panel 48

Figure 12 - Illustration of Collision Damage to Foam-Core Sandwich Panel 49

Figure 13 - Experimental Data on Collapse of Foam-Core Sandwich Panels 50

Figure 14 - General Motors Energy-Absorbing Steering Column 51

Figure 15 - Stages of Collapse of Two Energy-Absorbing Steering Columns 52

Figure 16 - Experimental Data for Energy-Absorbing Steering Column 53

Figure 17 - Expanded Metal in a Cylindrical Shock Absorber 53

Figure 18 - Impact Damage to Expanded-Metal Shock Absorber 54

Figure 19 - Load-Deflection Curve for an Expanded-Metal Tube 54

Figure 20 - Inverting Tube 55

Figure 21 - Experimentally Defined Curvature Parameter 56

Figure 22 - Specific Energy Absorption for Inverting Tube 56

Figure 23 - Torsional Tube 57

Figure 24 - Torsion Tube Shock Mount 58

Figure 25 - Influence of Geometry Changes on Torsional Tube Configuration 59

Figure 26 - Fluid Dispersal Shock Absorber 59

Figure 27 - Progressive Inextensional Buckling 60

Figure 28 - Typical Configuration of Tube, Collapsed from Inextensional Buckling 61

Figure 29 - Experimentally Determined Efficiency Factors, Inextensional Buckling 61

Figure 30 - Experimental Data for the Tube in Inextensional Buckling 62

Figure 31 - A Four Tube, Three-Dimensional Configuration 63

Figure 32 - Three-Dimensional Configuration after Collision Testing 63

Figure 33 - L/R versus R/t for 6061-T6 Aluminum Tubes 64

Figure 34 - An Integrated Protection System, Extremity Structure 64

Page

Figure 35 - Collapse of Load-Distribution System under a Pointed Obstacle 65

Figure 36 - Shear and Moment Diagrams for Distribution Systems and Various Collapsing Components 66

Figure 37 - Collapse of Load-Distribution System under a Point Load between Two Components 68

Figure 38 - Collapse of Load-Distribution System under a Finite Width Obstacle 68

Figure 39 - Typical Bumper-Tube Collapse 69

Figure 40 - Experimental Data for Bumper Tube 69

Figure 41 - Relationship of Critical Parameters for the Collapse of Aluminum Bumper Tubes 70

Figure 42 - Definition of Directions along the Craft and Toward the Obstacle 70

LIST OF TABLES

Table 1 - Characteristics of Polymeric Fabrics for Various Applications 12

Table 2 - Specific Energy Absorptions for Various Components 31

ABSTRACT

Collision protection is studied for the Advanced Research Projects Agency, concerning the proposed Arctic surface-effect vehicle (ASEV). The approach to collision protection is presented, and various energy absorbing concepts are investigated and evaluated for their possible use in protecting the ASEV in ice-obstacle impacts. Schemes being investigated are the air bag, foam-core sandwich panels, energy-absorbing steering columns, inverting and torsional tubes, fluid dispersal shock absorbers, and tubes which buckle inextensionally in axial compression.

ADMINISTRATIVE INFORMATION

This work was funded by the Advanced Research Projects Agency (ARPA) under ARPA Order 1676, Program Code ON10, and was authorized by the Arctic Surface Effect Vehicle Program Office at the Naval Ship Research and Development Center.

INTRODUCTION

This report documents the investigation of collision-protection features for the proposed Arctic surface-effect vehicle (ASEV). The goal of this project has been to develop the technology necessary for evaluating and guiding the design and analysis of collision protection for the Arctic SEV.

It is proposed that the Arctic SEV will operate in the Arctic regions at high speeds and in all kinds of adverse weather. Visibility can be a serious problem in the Arctic, and radar does not always detect ice hazards. The craft will operate on sea ice, pack ice, and tundra as well as over ice hummocks, pinnacles, and ice ridges. The craft must be equipped to climb slopes and to pass over ice obstacles at high speed.

The craft will be essentially a hard structure, supported on a cushion of air at some height above the terrain. The cushion will be maintained by a flexible skirt system. As the vehicle traverses the terrain, the cushion and the skirt system will contact obstacles of various shapes and forms. For normal operations of the craft, these obstacle contacts will be of concern only as they relate to vehicle efficiency, skirt wear, and stresses within the hard structure of the craft. When one of these

obstacles, however, is of such a magnitude that the hard body of the craft either collides with the obstacle or with other surfaces as a result of violent craft motions in negotiating the obstacle, a collision occurs. Collision will be defined as contact of the hard structure of the craft at some velocity into an obstacle or surface. This project investigates the consequences of such a collision and develops the capability of designing collision-protection features into the hard structure of the SEV. The collision-protection features will allow such collisions to occur without disablement or destruction of the craft. This program does not attempt to investigate either the impacts of smaller obstacles on the skirt system or motions of the craft in negotiating an obstacle. These problems are addressed by other projects. Instead, the assumption is made that a collision does occur, and the study is aimed at finding efficient and acceptable means of dissipating the collision energy. At the same time, this study will permit definition of maximum survival speed for a defined vehicle, thus contributing to specification of operating restrictions for such a vehicle.

The possibility of collision with an obstacle must not be ignored; for there are no safe routes through the Arctic, and mobility must be possible throughout the Arctic region. Since the SEV is very much like an aircraft structurally, collision with an ice obstacle on an unprotected craft could result in loss of the craft. Since the structure is lightweight, and the craft may be very massive, collision with an obstacle, even at low speeds, could result in extensive collapse of the structure in an uncontrolled fashion.

The alternative to this situation is both to develop a collision avoidance system so that major collision obstacles may be detected and avoided and to provide collision protection for the craft so that when collision is unavoidable, some measure of protection is available. The avoidance system will probably be composed of an electronic obstacle detection system such as radar and a maneuvering system. It is not within the scope of the collision technology study to investigate an avoidance system. Instead, the study is directed to the latter phase, that of providing a measure of protection when collision is unavoidable.

What form of collision may be expected? Since the ASEV is essentially a low-flying, terrain-following aircraft and follows the terrain at some

skirt height, any obstacles which lie in the path of the vehicle and extend upward more than the skirt height are collision obstacles. In addition, obstacles somewhat shorter may become collision obstacles if the craft pitches, compressing the bow area of the skirt, just prior to arrival at such an obstacle. One anticipated form, therefore, is the collision of the bow of the craft with an obstacle in its path.

Another form of collision exists due to the nature of the movement of the vehicle. Since the ASEV is not a tracked vehicle, it can drift in any direction, and in a wind, crabbing may not be unlikely. Also, in a turn, side skidding and poor yaw control are characteristic of SEV's. This type of motion exposes the side and stern structure to collision hazards. Of course, this form of collision may also occur as a result of any other form of collision eccentric to the center of gravity of the craft. The relationship of probabilities of collision-impact point and impact vector of a vehicle to controllability of the vehicle in Arctic terrain is beyond the scope of the present study.

Both bow and side collisions may be termed "extremity structure collisions" since the involved structure is on the periphery or extremity of the craft.

Another anticipated form is underbody collision. This form is possible when the craft climbs a slope, passes the peak, and proceeds down the opposite side. If the craft is moving with sufficient velocity and the peak is distinct enough, the craft will ski jump or fly through the air for a distance and return to the terrain with some velocity. If an obstacle, such as an ice pinnacle, exists where the craft lands, a collision of the obstacle with the craft underbody is possible. This form of collision may also occur by grounding the craft on rough ice due to accidental loss of power or by execution of emergency stop procedures.

Since underbody and extremity collisions are somewhat different both in the manner of collision and in the approach to providing protection, they are treated separately.

This report will present the approach presently being followed in developing collision technology for the underbody and extremity structure collisions.

Much of the effort thus far has been expended in the area of extremity structure collision. A number of energy absorbing techniques have been investigated and a few of the more promising schemes have been studied further in a testing program currently underway. This report will present the results of these investigations, and some of the test results.

EXTREMITY STRUCTURE-PROTECTION APPROACH

That portion of the Arctic SEV structure which is located at the periphery of the vehicle has been called extremity structure. In order to protect the remainder of the craft from damage, this lightweight structure will be considered expendable. Damage will be permitted to occur in the extremity structure or collision-protection region.

The inboard boundary of the collision-protection region is defined for a particular design by an envelope encompassing critical components of critical systems. Among the critical systems within the envelope should be the flotation, life-support, fuel spill control, propulsion and lift, control, communication and piloting, and structural. While it may be possible to place some of these systems at locations distant from the craft extremities, some of the critical systems such as control, propulsion, and lift tend to have critical components near the periphery of the craft.

The question of which systems are critical and which components of the systems are critical should be addressed here. This is not considered to be within the scope of the collision technology effort, however, and will be studied separately as a part of future vulnerability studies.

The envelope encompassing the critical systems components defines the inner bounds of the collision-protection region. The outer bounds must be the structure which actually contacts the ice obstacle; therefore, the inner and outer bounds of the collision-protection region are defined.

Of those obstacles that may contact the hard structure of the craft, some will be weak relative to the extremity structure and will be destroyed. Others will be strong relative to the extremity structure and will not be destroyed. The latter are the obstacles that are the main concern of the collision-protection study. Those obstacles that are weak and fail in collision will probably impart some damage but it is insignificant in comparison with the damage potential of a strong obstacle. Ice is a brittle

material[1,2] and possesses little capacity for absorbing any of the energy of the collision; since the strong obstacle is essentially unyielding, the craft kinetic energy toward the obstacle must be entirely dissipated by the protection system. That is, the craft velocity in the direction of the obstacle must be brought to zero by the protection system. If the protection system does not absorb all of this energy, the craft will experience unacceptable damage. Note that it is assumed here that the kinetic energy in one direction is not coupled to the kinetic energy in a perpendicular direction.

The task, therefore, is to develop a system capable of absorbing the kinetic energy of the ASEV. Equation (1) defines the relationship of the kinetic energy E to the mass of the craft M and the craft velocity in the direction of interest V.

$$E = 1/2\ MV^2 \tag{1}$$

The energy which must be dissipated, then, is a function of the velocity for a given craft. Figure 1 is presented to give an idea of the magnitude of craft energy which must be absorbed by the collision-protection system. It is obvious that this task is formidable, even for relatively low craft velocities; for higher velocities, even greater.

Lesser craft velocities will be assumed in collisions than top speed. This seems reasonable since a vehicle operating in rougher terrain where a collision might be anticipated, would most likely not be operating at top speed. Also since the pertinent velocity is not the full craft velocity but the component of that velocity in the direction of the obstacle, velocities less than craft-operating velocities may be assumed. It is a goal of the study to be able to define acceptable craft velocities for different types of collision.

---

[1]Pounder, E. R., "Physics of Ice," Pergamon Press, New York (1965). A complete listing of references is given on pages 71-72.

[2]Weeks, W. and A. Assur, "Mechanical Properties of Sea Ice," Monograph II-C3, Cold Regions Research and Engineering Laboratory, Hanover, N. H. (Sep 1967).

Another criterion which must be included in the design is the acceleration or deceleration environment during the collision. Personnel-protection studies[3,4] by the Naval Ship Research and Development Center (NSRDC) found that Figure 2 describes the tolerable motion environments of a man in a ship compartment. It can be seen from this plot that for reasonable craft velocities, the average deceleration must be less than from 15 to 20 g's. It may be desirable to prescribe this limit even lower. Figure 3 presents the effect of this criterion on minimum stopping distances or in other words--minimum protection-region depths.

This is only one criterion, however, and other criteria such as maximum force acceptable by the support structure of the protection system may control the design instead, and the craft may use stopping distances longer than those indicated in Figure 3.

A structure must be designed for the collision protection region to satisfy the criteria for damage confinement, maximum allowable force on the structure, minimum stopping distance or maximum deceleration of crew, and payload. In addition, the structure must be as light as possible since the craft is airborne. The most efficient means of energy absorption is via components which transmit a constant force while deforming. If that constant force were the maximum allowable, the greatest possible energy would be absorbed for the given allowable force, since the energy absorbed is proportional to the area under the force-displacement curve. It is desirable that the protection structure fail in such a way that it does not contribute to the vulnerability of the vehicle. A disposable system should be able to sustain more than one subcritical impact, and a restorable system should be restorable in a remote area. Since damage repair capability in the field is desirable, replaceable sections of energy absorbing structure should be conveniently storable, and sections of structure should be easily removable. It may also be desirable to design and install a low-energy

---

[3] Hirsch, A. E., "Man's Response to Shock Motions," David Taylor Model Basin Report 1797 (Jan 1964).

[4] Mahone, R. M., "Man's Response to Ship Shock Motions," David Taylor Model Basin Report 2135 (Jan 1966).

bumper system for the outboard side of the collision protection structure so that very minor collisions such as contact with a dock do not incur damage to the major protection components. Certainly, the damage to the major components would be minor under such conditions; however, replacement of a bumper section would be more simple than replacement of a major component. An additional requirement, which the collision protection structure should meet, would be the ability to take operational loads. These loads would result from using the collision-protection structure for operational duties such as skirt support, dissipation of over water loads, or air plenum support.

The phenomena of collision damage may be treated as a quasi-static problem structurally as opposed to a dynamic problem, since there are insignificant inertial forces involved and wave-propagation effects are negligible. Since the craft is massive in comparison to the extremity structure, and the obstacle is essentially unmoving, the collision may be described using the energy relationship of Equation (2)

$$F\ (X_i - X_f) = 1/2\ MV^2 \tag{2}$$

where F is the limit force allowed by the collision protection structure,

X_i is the original depth of the protection structure,

X_f is the final or post-collision depth of the protection structure,

M is the mass of the craft, and

V is the craft velocity in the direction of the obstacle.

This equation assumes that the force-deflection curve is an ideal, constant-force curve such as shown in Figure 4. If this assumption cannot be made, that is, if the force is a function of the deflection, then Equation (2) takes the form of Equation (3).

$$\int_{X_i}^{X_f} F(x)\ dx = 1/2\ MV^2 \tag{3}$$

Determination of the force deflection characteristics of extremity structure components is a static problem with the exception of the influence

of deflection rate for some components. The air bag, for example, in some cases is sensitive to the rate of bag collapse. For reasonable craft velocities and for the light metals likely to be found in the extremity structure, the strain-rate effect has not been found to be significant and is therefore ignored.

Figure 5 is a schematic representation of the extremity structure on the craft, and Figure 6 illustrates the possible form of such a structure. Many possible energy-absorbing schemes may be used in the major energy absorbing components. These schemes were investigated theoretically, and their capabilities and characteristics were compared with the stated requirements. Certain schemes showed little potential, and the investigation of those schemes went no further. Other schemes showed promise and were investigated further theoretically, and, when reasonable promise was shown, a testing program further checked the theoretical work and verified assumptions.

MAJOR ENERGY ABSORBING COMPONENTS

Among the many schemes conceivable for the major energy absorbing component of the extremity structure the following ideas have been investigated:

1. Air Bags
2. Foam Core-Sandwich Panels
3. Energy-Absorbing Steering Columns
4. Inverting Tubes
5. Torsional Tubes
6. Fluid Dispersal Shock Absorbers
7. Thin Wall Tubes in Axial Inextensional Buckling

Each of these schemes will be discussed in detail. In addition to those mentioned previously, a few ideas are yet to be investigated. These include configurations making use of the wire-drawing technique, whereby a high-strength rod is drawn through a die, forcing the rod to conform to a smaller diameter. The plastic flow involved in this configuration is potentially useful in energy absorption.

A few general comments can be made which apply to all schemes investigated. In general, it can be said that a major effort must be made

to avoid fundamental mode buckling of a structure. When a component buckles like a column, even if plastic hinges form at the center and near the ends of the component, the force deflection curve is far from ideal. In addition, the weight penalty paid as a result of much of the component not acting in an energy-absorbing role is severe, and the component does not compete with other energy-absorbing schemes. To illustrate the point further, Figure 7 compares the ideal force-deflection curve with that of a buckling component. The particular component compared is a planar tube configuration buckling out of the plane of the tubes.

In general, the more material in the extremity structure which can be involved in plastic action, the better will be the energy-absorbing capability per pound of material.

Major components were studied principally for head-on collisions, i.e., for symmetrical collapse of the component. Lateral stability has also been investigated but, thus far, no effort has been made in evaluating the energy-absorbing capability of components in any direction but head on.

Air Bags

One of the more promising major energy-absorbing components is the air bag. Figure 8 shows the use of the air bag concept in energy absorption on an ASEV.

The scheme is essentially to force a bag containing air to collapse in a collision,[5,6] expelling the air through an orifice system. If the orifice system is designed to maintain a constant pressure in the bag after blowout patches over the orifices have functioned, the force transmitted to the craft will be limited. The force on the craft is a distributed force equal in magnitude to the pressure in the bag. Since the pressure in the bag tends to build up if the collision velocity is greater than the flow

---

[5] Howe, J. T., "Theory of High-Speed-Impact Attenuation by Gas Bags," National Aeronautics and Space Administration, Ames Research Center, NASA-TN-D-1298 (Apr 1962).

[6] Esgar, J. B. and W. C. Morgan, "Analytical Study of Soft Landings on Gas-Filled Bags," National Aeronautics and Space Administration, Lewis Research Center, NASA-TR R-75 (1960).

capability of a given orifice, the orifice system must be capable of adjusting to maintain a constant pressure. This is possible through variable area orifices sensitive to the pressure in the bag or through a combination of orifices with blowout patches set to blowout at pressures slightly higher than the designed bag pressure. It is obvious that the variable orifice system will require developmental effort.

It may be desirable to maintain a pressure in the air bag somewhat less than the orifice blowout patch pressures to prevent accidental activation of the orifice system. It is possible to use the collision energy to increase the bag pressure adiabatically to the blowout pressure. This approach has the advantage of not requiring maintenance of a higher pressure in the bag; however, the penalty is the risk of rebound of the craft if the velocity is low enough for the bag to absorb all the kinetic energy in the adiabatic compression phase before the blowout patches are activated. Also, since the adiabatic process does not approximate the ideal load-deflection curve (Figure 9), this process is not as efficient an energy absorber as some others. Perhaps a compromise is in order where a bag pressure will be maintained, and the adiabatic compression phase will be quite short.

Since the bag pressure must be limited by the capability of the craft structure to take distributed loads, this value would be specified for the bag design. An operational pressure to be maintained in the bag is then chosen, and the adiabatic process is described in Equation (4).

$$P_2 = P_1 \left(\frac{V_1}{V_2}\right)^{\gamma} \tag{4}$$

where γ is the ratio of specific heats which is equal to 1.4 for air,

V_1 is the initial volume of the bag compartment,

V_2 is the volume of the compressed bag at time 2,

P_1 is the operational bag pressure, and

P_2 is the pressure in the bag at time 2.

All pressures must be absolute pressures.

The amount of bag collapse in the adiabatic process is a function of the obstacle size, compared with the bag compartment size, the original pressure in the bag at collision, and the orifice-activation pressure.

To illustrate the adiabatic process further, a sample bag is chosen, and the pressure and temperature in the bag are presented as a function of collapse depth. It should be pointed out here that in Figure 10 it is assumed that the obstacle is large enough to collapse the entire bag compartment. The orifice-activation pressure is 7 psi, and the bag chosen is a 10-ft square bag. The work done per unit length of bag is also presented.

The adiabatic work available for dissipation of collision energy is calculated as follows

$$W_a = \frac{P_2V_2 - P_1V_1}{1 - \gamma} - P_{at} A d \tag{5}$$

Note that the work done by the atmospheric pressure P_{at} must be subtracted from the total adiabatic work; P_2 is the orifice-activation pressure here, V_2 is the volume at orifice activation, and d is the amount of bag collapse before orifice activation.

When P_2 reaches the orifice-activation pressure, the constant pressure process begins. At all times the force on the obstacle is equal to the bag pressure times the obstacle contact area, while the load on the craft is defined by the following equation

$$w_c = w_o \frac{A_o}{A_c} \tag{6}$$

where w_c is the pressure load on the craft,

w_o is the pressure load on the obstacle,

A_o is the obstacle contact area, and

A_c is the craft-to-bag contact area.

The work done or the energy absorbed is defined by Equation (7).

$$E = w_o A_o d \tag{7}$$

where E is the absorbed energy, and d is the distance the obstacle travels through the bag or the amount of bag collapse.

It is obvious that the most efficient use of the bag is in collision with an obstacle larger than a bag compartment. For other collisions, the

load is limited to less than the craft capability, and therefore the energy absorption process is not as efficient. Thus, it appears that either the air bag should be rather heavily compartmented or load-distribution systems should be employed to increase the effective obstacle to bag contact area.

Air bags may be constructed of a wide range of materials. Several fabric types are commercially available, including polymetric, metal, and Airmat. Typical fabric properties[7] are presented in Table 1. The bags must be designed, of course, to take the maximum pressure expected within the bag. For a cylindrically shaped bag, calculation of the hoop stresses are as follows

$$\sigma_H = \frac{PD}{2t}$$

where σ_H is the hoop stress,

P is the maximum bag pressure,

D is the bag diameter, and

t is the thickness of the bag.

TABLE 1 - CHARACTERISTICS OF POLYMERIC FABRICS FOR VARIOUS APPLICATIONS*

Fabric Type	Total Weight oz/yd^2	Working Pressure	Tensile Strength lb/in.
Nonrigid Airship	12-26	1-4 in. H_2O	50-550
Fabric Radomes	37	13 in. H_2O	700
Inflatoplane	18	7 psi	450
Drag Balloon (Ballute)	4- 6	1-2 psi	182
Space Station	86	7 psi	2000

*This information reported in Reference 7

[7]Stimler, F. J., "Advanced Materials and Techniques for Space Applications," Presented at American Rocket Society 15th Annual Meeting (Dec 1960).

A few calculations will reveal that for typical bag pressures and bags large enough to provide significant protection, the bag fabric must be of high strength.

Although the air bag has a few problems associated with its use, it has a reasonably high specific energy-absorption capability (10.0 kip-ft/lb) for high-strength-bag fabrics and shows enough potential to continue evaluation of the bag as a prime candidate. Since static air cushion-lift systems of amphibious SEV's employ an air bag at the periphery of the vehicle, the vulnerability of such bags and their usefulness in collision protection will be studied further.

Foam-Core Sandwich Panels

Figure 11 shows the foam-core sandwich panel. The panel is composed of two thin aluminum plates which encase a thick layer of rigid foam. The idea is to place the aluminum at a distance from the neutral axis of the panel to develop sufficient cross sectional properties (high moment of inertia with low area) to permit axial yielding and local buckling, while prohibiting fundamental mode buckling.

The idea was potentially valuable since it allowed the possibility that nonessential bulkheads might be efficient energy absorbers. If the panel could be made to collapse locally with plastic action, the structural integrity would be maintained by the remainder of the panel. The force level would remain essentially constant, since buckling at the next deflection increment would be essentially like that at the last increment.

It was not certain, however, what the effect of the foam would be and whether the two thin aluminum skins would act more as one unit or two separate units. To resolve these questions a test series was run. A foam-core sandwich panel was designed and constructed, and the unit was tested in the drop tower facility at the Center.

The test results showed that the foam core, while quite weak under static loading, became very rigid under the impact loading of the drop tests. The panels, unable to accept such great increases in the axial loading, buckled in the fundamental mode. In an attempt to counter this increased loading, the column length of one of the specimens was greatly shortened and the specimen was tested in the drop tower facility. Again,

fundamental mode buckling occurred. The tests indicated that to avoid this form of buckling, the panel would need to be very thick, in fact, thick enough to invalidate the design assumption that the aluminum skins act as the resisting elements of the component. The tests also show that the dynamic load-carrying capacity of the foam is a function of the impact velocity. This is due to the fact that the entrapped air in the foam must escape for the foam to fully collapse. Under static conditions, this is possible but under dynamic conditions, this entrapped air cannot escape fast enough, and the force level rises. Since the force level varies with impact velocity, this component cannot be truly force limiting. When the panel is evaluated as originally intended, that is, as a foam-core sandwich panel of reasonable dimensions, the panel buckles and absorbs essentially no energy.

The results of tests on the foam-core sandwich panel are presented in Figure 12. A sample of the experimental data from tests on each of the two types of specimens is presented in Figure 13. The dimensions of interest for each of the specimens are as follows:

Specimen	Aluminum Skin Thickness in.	Panel Thickness in.	Column Length in.
A	0.030	1 1/2	36
B	0.030	1 1/2	12

Note that the experimental data are acceleration data. The data were gathered by accelerometers on the impact vehicle. This vehicle weighs 704.3 lb and so the conversion to force in pounds is by that factor.

Since the foam-core sandwich panel does not absorb significant energy and is not force limiting, it has been judged to have little potential as an energy absorber for the ASEV.

Energy-Absorbing Steering Column

Figure 14 shows the energy-absorbing steering column. These units were developed as protection against chest crushing or chest penetration sometimes caused by rigid steering columns in automobile accidents. The

unit shown is one kind of commercially available, mass-produced, steering-column element designed for installation in many 1967 automobiles.

Energy is absorbed during axial loading by the plastic bending of the diamond-perforated sections. The band near the midsection of the column and the bulges in the tube are designed to prescribe and control the manner of collapse. Although it is not obvious from the figure, the bulges in the column are of varying magnitude so that the steering-column sections collapse progressively. Figure 15 shows the collapse of two energy-absorbing steering columns. This figure is actually a series of frames from a high-speed movie taken by the Center when evaluating the unit as a personnel protection device. Figure 16 shows a sample of the data gathered in this evaluation. The solid curve is the driving function, while the dotted curve is an indication of the column response. The relatively constant acceleration indicates that the steering column is force limiting and approximates the ideal force-deflection curve.

While the testing done in the personnel protection studies was limited to the column commercially produced for automotive use, other designs employing the same energy-absorbing scheme are certainly possible. The load-limit value for the columns may be controlled through the proper selection of dimensions, materials, and degree of annealing. The load-limit value for the commercial steering column was about 420 lb. The weight of the unit was 0.435 lb, and the effective length (crushable distance) was 7 3/4 in. The energy-absorbing potential per pound of material (specific energy absorption) is therefore 0.62 kip-ft/lb.

Several problems are possible with the use of this device on the Arctic SEV. First, the commercial units tested were only 10 1/4 in. in length. Much longer lengths will be necessary in the ASEV. A longer column will be a potential buckling problem but this problem is probably surmountable. In order to control collapse of a long column, however, a much more intricate pattern of bulges and bands will be needed, and it is likely that the force-deflection curve will deviate somewhat from the ideal as a result. In addition, these units may prove to be cost prohibitive unless very large quantities are to be manufactured.

As the diamond-shaped perforations in the energy-absorbing steering column are suggestive of a column of expanded metal, a short discussion of

such a device is briefly presented here. In the investigation of these devices (Figure 17) it was found that without the efforts to prescribe their failure - in the energy-absorbing steering column, they tended to fail as shown in Figure 18 with a corresponding dropoff in the load-deflection curve; see Figure 19.* Also since much of the material does not experience plastic action, the device is not as efficient, considering weight, as the steering column. Conclusions concerning applicability of such a unit for the ASEV therefore must be negative. Although inexpensive, the unit is far from an ideal energy absorber; the unit will be too heavy for the energy-absorbing capability, and problems will result when the unit is used in the longer columns necessary for the ASEV.

Inverting Tubes

Figure 20 shows the concept of absorbing energy by the inversion of a circular tube. Energy is absorbed by forcing the tube to experience plastic bending and hoop extension while passing from its original diameter through a half toroidal shape to its final diameter. Since for a tube of constant cross section, the same load is required to do the work on each increment of the tube length, the system is theoretically load limiting and a reasonable approximation to the ideal load-deflection curve. The idea is fairly simple, and replacement of damaged parts should be relatively easy.

This component is relatively cheap to manufacture, except possibly for the die used to deform the tube. The die is fairly simple, however, and even this part may not be prohibitively expensive. The long column lengths necessary are also acceptable since the same force levels are achievable with different R/t (radius-to-wall thickness ratios) and an R/t can be chosen for a particular limiting-force value and a given column length to prevent buckling.

---

*Figure 19 is a load-deflection curve and not a load-time curve.

Theoretical work done by the National Aeronautics and Space Administration (NASA)[8] shows the load-limit value to be prescribed by the following relationship

$$F = 4.44\ \sigma_y\ t^{3/2}\ D^{1/2} \tag{8}$$

where F is the load-limit value,

σ_y is the yield stress,

t is the wall thickness, and

D is the tube diameter.

The total energy-absorbing capability of the inverting tube is the limit load times the length of the tube which can be inverted. In an ASEV application, this length is approximately one-half the tube length, since the two ends of the tube would be together at the halfway mark, and further deformation would have to be in a manner other than tube inversion. While it may be possible that the tubes may be made to collapse further in a manner consistant with additional energy absorption, it is unlikely that the force levels would be the same as during the inversion process. This means, of course, a deviation from the ideal force-deflection curve.

Experimental work done by NASA[8] indicates a more accurate limit-load prediction could be made using the following relationship instead of Equation (8)

$$F = \frac{\pi\ D\ t\ \sigma_y}{2} \left[\frac{1}{C} + \frac{2t\ C}{D}\right] \tag{9}$$

where C is a curvature parameter determined experimentally and defined in Figure 21 for different R/t's. In addition, it was found that deformation rates on the order of 30 ft/sec increased the inversion load by approximately 15 percent more than the static rate. This means that the system is

---

[8]Guist, L. R. and D. P. Marble, "Prediction of the Inversion Load of a Circular Tube," National Aeronautics and Space Administration, Ames Research Center, NASA TN D-3622 (Sep 1966).

not truly load limiting; however, the effect is small enough to plan for, if inverting tubes are effective in comparison with other energy-absorbing devices.

If the weight of the dies is ignored, and it is assumed that a tube can invert half its length, then the energy absorbing capability of this scheme per pound of material is given in Figure 22. Since the R/t will be influenced by the buckling criteria for long tubes, a reasonable upper limit on the capability of inverting tubes is approximately 3.0 kip-ft/lb (specific energy absorption).

Since the extremity structure must take service loads as well, it may be necessary to provide for tension capability in the inverting tube configuration. Since tension would tend to pull the element from the die, a shear pin arrangement between the die and the tube might be necessary. An alternate solution would be to install the tube on the die and to invert a short segment of the tube to hold it in the die during service loads. This method would sacrifice a portion of the tube that might have been used to absorb energy in a collision; of course, replacement of the tube element in the field will not be as simple.

Although the specific energy absorption for inverting tubes is shown to be quite good, other schemes have proven to be potentially even better. For this reason, those other methods are pursued at the expense of further investigation of the inverting tube.

Torsional Tubes

One possible scheme for absorbing the collision energy of the ASEV is with the use of circular tubes in torsion; see Figure 23. This concept is potentially useful since when a circular tube yields in torsion, all the material of the tube yields.

Figure 24 shows an application of the energy-absorbing concept of torsional tubes. The scheme is to place one tube inside a slightly larger tube, weld the tubes together at one end, and rotate them relative to each other at the opposite end about their common longitudinal axis. The resulting plastic action in torsion absorbs the energy. The arrangement shown in Figure 24 is a shock mount application, designed for shipboard use by the

Center.[9] In the configuration shown, the pipe sections are welded together at the midlength of the pipes, and the pipes are rotated in torsion from both ends; thus each pipe pair actually forms two energy-absorbing applications of this concept. Members in Figure 24 labeled (1) and (2) form a mechanism transforming the rotary motion of the energy-absorbing elements (3) and (4) into translational motion. This sort of transformation will also be necessary for ASEV extremity-structure applications.

The force-deflection curve for such an arrangement is force limiting; once the tubes begin to yield in torsion, a mechanism is formed, and the force is limited. The magnitude of the developed hinge moment is essentially independent of collision speed. The force-deflection curve is not ideal since the mechanism transforms translatory motions into rotary motions. It can be shown that for such configurations, as the translations get large and the angles between the mechanism links experience large changes, the incremental change in translation produces a lesser incremental change in rotation than in the original geometry (Figure 25); therefore, by limit analysis, the force level decreases. The plastic moment contribution to the mechanism and the characteristics of each of the torsional tube units can be calculated by the following equations

$$M_p = \pi R^2 t \tau_y \tag{10}$$

$$\theta_{el} = \frac{L \gamma_{el}}{R} \tag{11}$$

$$\theta_{max} = \frac{L \gamma_{max}}{R} \tag{12}$$

---

[9] Butt, L. T., "The Use of Torsion Tubes to Approach the Ideal Constant Force Maintenance-Free Restorable Shock Mount," NSRDC Report 2545 (Dec 1969).

where M_p is the plastic moment contribution,

R is the tube radius,

t is the wall thickness,

L is the tube length,

τ_y is the shear yield stress,

θ_{el} is the elastic limit tube rotation,

γ_{el} is the elastic limit shear strain,

θ_{max} is the maximum allowable tube rotation, and

γ_{max} is the maximum allowable shear strain.

Members connecting the torsional tubes must be designed to elastically sustain the plastic moment of the tubes. These members will add to the weight of the system while plastically absorbing no energy themselves. It will, therefore, be advantageous if these members are as small a percentage of the total structural weight as possible. For the large spans needed in the extremity structure, complicated mechanisms using many torsional tubes will be necessary but, even here, the mechanism links form a significant portion of the weight.

The specific energy absorption for a torsional tube scheme is difficult to estimate at this point since the capability depends to a great extent on the maximum allowable shear strain. It is this quantity which controls the length of the torsional tubes. Little data are available concerning this material property for steels and aluminums, and estimates must be based on tensile elongation properties in lieu of experimental data.

Steel pipe was used in the shock mount discussed here; the mount was successfully subjected to a shear strain 50 times the elastic limit strain with no hint of impending failure. Other test data indicate that steel may be able to withstand shear elongations as high as 250 times the elastic limit strain. These data, however, are limited, and no inference can be drawn for aluminum, a more likely material when weight is so important. Preliminary indications for aluminum are that elongations about 60 times the elastic limit are reasonable. This corresponds to a maximum shear elongation of approximately 27 percent.

A simple configuration of torsional tubes was designed for ASEV use to estimate the specific energy absorption and a value of approximately 1.2 kip-ft/lb was found to be reasonable. If a more complicated configuration

were to be used, this value might increase by a factor of 1.5 to 2.0. Also if experimental data demonstrate a better shear elongation property, the specific energy may increase further. Since the specific energy of the scheme does not compete favorably with other schemes, it has been decided to pursue the other schemes. It may be advisable, however, to take another look at this concept when the necessary data are available.

A few problems exist in this system that also inhibit its use. First, the torsional tube lends itself readily to configurations that are essentially planar. Energy absorption out of that plane would be minimal. To compensate for this drawback, a configuration must be designed to stabilize the system for out-of-plane motions and to absorb energy in those directions. This is possible by arrangements in which two planar systems intersect at right angles to form a new system. These arrangements are certainly possible; however, clearances would be important to avoid interference of one system with another or even a system with itself. In addition, replacement units would probably be bulky sections and field repairs would be more difficult.

Fluid Dispersal Shock Absorbers

Fluid dispersal shock-absorbing systems make use of the principles of hydraulics to absorb energy. That is, the collision velocity on a fluid area drives the fluid through a smaller area, called an orifice. Since the flow rate must be compatible in both areas, the fluid velocity through the smaller area is greater, and energy is expended in increasing the kinetic energy of the fluid and in energy losses in the orifice.

Figure 26 shows a simple fluid dispersal system which might be used on an ASEV. The system is essentially two circular tubes of such dimensions that one tube fits within the other with small clearances. A seal makes the unit fluid tight, and one end of each tube is capped off with a plate. The tubes are extended as shown in the figure, and shear pins are installed to stabilize the unit for service loads. Near the inboard end of the system is an exhaust-port orifice. A blowout patch is placed over the orifice to prevent loss of fluid, except in a collision.

The system would respond to a collision as follows. The impact loads the shear pins connecting the tubes and the pins would fail. Since the load

would no longer be resisted by the shear pins, the pressure in the fluid would build up until the blowout patch failed. Then the outboard tube would begin to travel past the seals, and the tubes would be pushed together. The rate at which they would close would be a function of both the orifice and the tube sizes since a fluid flow would result from relative displacements of the two tubes. Pressure in the fluid acting on the outboard end of the tube would resist the collision forces and for reasonable collision velocities, a steady state fluid flow would be assumed, and the force would remain constant.

The design of the system is dependent on the pressure in the fluid, and from Equation (13)[10] it is seen that the energy-absorption capability of the system is also dependent on the fluid pressure.

$$E = PAH = E_o + 1/2\, M_f V_o^{\,2} \tag{13}$$

where P is the fluid pressure during collision,

A is the fluid-wetted area on the surface of the outboard plate cap,

H is the allowable tube displacement or half the system length,

E_o is the energy loss in the orifice,

M_f is the total mass of the fluid lost, and

V_o is the fluid velocity through the orifice.

The maximum fluid pressure must be limited by what the tubes can take. This capability is defined by Equation (14), derived from the hoop-stress relationships.

$$P \leq \sigma_{ult}\, t/R \tag{14}$$

where σ_{ult} is the ultimate stress of the tube material and R is cylinder radius.

If incompressible fluid flow is assumed, then by flow continuity, the following results must be true

---

[10] Vennard, J. K., "Elementary Fluid Mechanics," John Wiley & Sons, Inc., New York (1961).

$$V A = V_o A_o C_o \tag{15}$$

where V is collision velocity and the fluid velocity in the tube,

V_o is fluid velocity through the orifice,

A_o is the area of the orifice opening, and

C_o is a coefficient which adjusts the orifice opening to account for a necking down of the fluid stream as it passes through the orifice.

C_o is a function of the orifice shape, and values are tabulated in any fluids text or handbook.

If Equation (15) is used with the Bernoulli equation, it can be shown that the pressure in the fluid is defined by Equation (16)

$$P = \frac{\gamma V^2}{2g} \left[\left(\frac{A}{A_o C_o}\right)^2 - 1\right] \tag{16}$$

where γ is the fluid-weight density and g is gravity. This relationship shows that the pressure in the tubes and the force-resisting collision damage are not independent of impact velocity. In fact, they are a function of the velocity squared. Therefore, although the system delivers a constant force for a given velocity of impact, and the force deflection curve is approximately ideal, the fluid dispersal system is not desirable for ASEV collision protection since the force level is not limited. The consequences of using such a system are that for collisions at velocities greater than the designed value, the system is capable of delivering a higher force to the structure being protected than the design force, causing damage. An alternative consequence is that the tubes of the dispersal system would burst as a result of the greater fluid pressures; the system would collapse, absorbing little energy, exposing the craft to the full brunt of the collision.

It is possible that by providing a variable dimension orifice system sensitive to the fluid pressure, the shock absorber could be made force limiting over a range of impact velocities. By adjusting the orifice size, the flow rate could be controlled, and a pressure change could be averted until all the fluid was expelled.

Since so much of the total weight of the system does not act in the energy-absorbing process, the specific energy absorption is quite low. Specific energy absorptions of approximately 0.2 kip-ft/lb may be expected.

More elaborate fluid dispersal systems are available commercially. These units are similar to those discussed, except that the dispersed fluid is collected and returned to the unit for re-use. Commercial units exhibit specific energy-absorption values approximately equal to those for the system presented here.

The method of energy absorption in fluid dispersal is quite similar to that used in the air bag. Since the air bag shows more potential for specific energy absorption due to lightweight, high-strength, bag fabrics, the investigation of fluid dispersal shock absorbers has not been pursued further in this study. The air bag and the fluid dispersal system have essentially the same disadvantage of requiring additional hardware for load-limiting characteristics; however, the air bag shows more potential for the solution of the problem of eccentric impact or impact not directly along the line of action of the mechanism. A nonaxial load on the shock absorber could result in flexural failure of the unit. Therefore, special attention must be paid to configurations of shock absorbers specifically to account for this possibility. Since an air bag with proper support is not as directional as a single shock absorber, this problem is not as critical.

The problems associated with the use of the fluid dispersal shock absorber and the comparatively low specific energy absorption for this concept indicate that the fluid dispersal shock absorber is not as attractive as other devices being considered for use on the Arctic SEV.

Thin Walled Tubes in Axial Inextensional Buckling

When a thin walled circular tube is loaded axially, one possible mode of collapse is inextensional buckling.[11] This is a mode whereby a

---

[11] Hoff, N. J., "Dynamic Stability of Structures," Stanford University, Department of Aeronautics and Astronautics, SUDAER 251 (Oct 1965).

buckling pattern about the original line of the circumference occurs such that there is no hoop extension or diameter expansion of the tube. Figure 27 shows this mode of buckling. Note, that as the buckling progresses to the stage where plastic action occurs, a characteristic diamond pattern results. A tube buckling in this manner does so in relatively short segments of the tube length at a time, progressing incrementally along the length of the tube until the tube is folded like an accordian. The characteristic diamond patterns form and then fold over against the previously formed layers of diamonds. Figure 28 shows a tube which has collapsed in this buckling mode.

It should be noted that although this is a form of buckling, and buckling modes are generally characteristic of poor energy absorption, this mode of buckling results in rather good energy absorption. This is due to the fact that this buckling is very localized and with each local buckle, a set of plastic hinges forms.

When a length of tube buckles in this manner, a significant portion of the tube material experiences plastic action, and since relatively thin walled tubing is used, good specific energy absorption results.

It is obviously necessary in designing a component for inextensional buckling that the buckling of the tube in the fundamental column buckling mode must be precluded. These two buckling modes are entirely different, and the critical loads for each are different. All that is required, therefore, is to ensure that the tube dimensions are such that inextensional buckling is the weaker of the two modes.

To calculate the load that buckles a tube in the column fundamental mode, assume that the tube ends are pin connected. The critical load then is specified as follows

$$F_{cr} = \frac{\pi^2 E I}{L^2} \tag{17}$$

where F_{cr} is the fundamental mode critical load,

E is the elastic modulus,

I is the moment of inertia for the tube cross section, and

L is the tube length.

The critical load for the inextensional mode must be less than this value. It is recommended that a factor of safety of approximately 1.4 be used to ensure that column fundamental mode buckling does not occur.

Note that the criterion used here for fundamental buckling is the Euler load. This criterion is for static application of the load. In a collision, the loading is essentially a quick rise to the limit load, and the static approximation may not be accurate. Since the Euler buckling criterion is used to design the tube length, the error is somewhat smaller than the error in approximating the load. Some references indicate that when the load is quickly applied and sustained, the column can buckle at loads smaller than the Euler load.[11,12] This effect will be further investigated, and, if necessary, the buckling criterion will be revised.

It appears that, at worst, the dynamic nature of the loading will result in an effective amplification of the loading by a factor of 2. The effective Euler critical buckling load is therefore, at worst, one-half the static value, and the critical tube length is, at worst, $1/\sqrt{2}$ times the critical tube length, computed for the static case. A factor of safety for the critical column length of 1.4, therefore, appears to be adequate.

In the inextensional buckling mode, the critical load is defined as follows

$$F_t = K \sigma_y A \tag{18}$$

where F_t is the limit load in inextensional buckling,

σ_y is the yield stress,

A is the cross sectional area of the tube, and

K is a factor indicating the percentage participation of the tube material in plastic action. This factor will be determined experimentally.

---

[12] Holzer, S. M. and R. A. Eubanks, "Stability of Columns to Impulsive Loading," Journal of the Engineering Mechanics Division, American Society of Civil Engineers Proceedings, 6734, EM4 (Aug 1969).

The participation factor K varies with tube cross sectional dimensions and is an indication of the relative size of the diamond pattern mentioned earlier. For example, a large diameter, thin walled tube will have a diamond pattern of larger dimensions than a smaller diameter tube having about the same wall thickness. Since plastic yielding occurs in the region of the diamond boundaries, a lesser percentage of the total tube participates in a tube of larger diamonds. Therefore, the participation factor for the larger diameter tube will be less than the factor for the smaller diameter tube for a given wall thickness.

Experimental data from testing such tubes at the Center do not indicate that velocity level has significant influence on the load-limit value for reasonable ASEV collision velocities. Some evidence[13] indicates that velocity has a measurable effect on the load-limit value for tubes of very large diameters and very thin walls. These tubes, however, are thin compared to the tubes which would likely be used in the ASEV extremity structure.

Figure 29 shows the participation factor versus the nondimensional ratio of tube radius R and wall thickness t. This plot is a direct result of a series of drop tower tests conducted at the Center. The drop tests will be documented separately. A good fit to the experimental data is obtained by the following

$$K = 0.9107\ e^{-0.0523\ R/t} + 0.016 \tag{19}$$

Each of the data points shown on the plot is actually an average from a series of drop tests made at different velocities on the indicated tube size. In all cases, the deviation of any one term from the average never exceeded about 3 percent of the average.

---

[13] Goppa, A., "On the Mechanism of Buckling of a Circular Cylindrical Shell Under Longitudinal Impact," Technical Information Series R60SD494 of the Space Sciences Laboratory, General Electric Company, Missile and Space Vehicle Department (1960).

Since each undeformed incremental length of the tube is like all others, each inextensional buckle of a given tube is like all those preceding it. For reasonable craft velocities and tubes in the dimensional range indicated in Figure 29, the buckling process is smooth enough to produce a constant force-deflection curve. This means that although each incremental length of the tube buckles, the load does not decrease significantly as a result of the instability before the load is taken up again by the remaining stable portion of the tube. A typical experimental record from one of the drop tests is presented in Figure 30 to illustrate the constant nature of the force history. The record is an acceleration time history of the impacting weight; however, since the impacting mass does not change, the record may be interpreted as a force history as well. The slight oscillations about the constant force are probably caused by the piecewise nature of the buckling. These force oscillations would be dissipated in the craft structure, especially in a structure exhibiting a damping ratio of 4 or 5 percent as found experimentally in tests of the SK-5.

Since the tube is a directional energy absorber, a tube configuration rather than a single tube must be utilized to provide stability in all directions. Figure 31 shows such a configuration before testing; Figure 32 shows the specimen after a collision.

While the tube configuration adds stability, it also requires that each tube be capable of resisting the lateral loads caused by the tube orientation. Protection must be built into the component to prevent "kick out" of the tubes after a few layers of folds have been created by a collision. This protection is provided by the angle sections at the base of each tube leg. The angle provides a surface at such an inclination that the tube loading is closer to axial loading. Actually the inclinations are biased at somewhat steeper angles to account for the change in configuration geometry as the system collapses.

The tubes maintain a structural integrity through the uncollapsed tube length during collision. The force-limiting criteria are satisfied. The scheme is capable of withstanding service loads, and the specific energy absorption is quite good. Specific energy absorptions of 6.6 kip-ft/lb have been demonstrated experimentally, and the theoretical potential

is approximately 12 kip-ft/lb. The inextensional buckling of circular tubes is therefore a potential extremity-structure scheme.

To design a four-tube configuration using this scheme, the force-limiting level required from each tube is required. This value is calculated using Equation (20)

$$F_t = \frac{F_p}{4 \cos \theta} \tag{20}$$

where F_t is the limit force for each tube, and F_p is the component design-force-limit value or the load which will be transmitted by the extremity-structure component to the craft. The angle θ is the angle that each of the tube elements form with the main axis of the component configuration. A reasonable value for the participation factor K should then be assumed, and the required cross sectional area A should be calculated using Equation (21).

$$A = \frac{F_t}{K\sigma_y} \tag{21}$$

where σ_y is the yield stress. From Figure 29, R/t may now be determined.

Equation (22) is then used to calculate the diameter D for the tube, knowing R/t and the area A.

$$D = \sqrt{\frac{2A\ (R/t)}{\pi}} \tag{22}$$

Knowing D, the wall thickness t is calculated from Equation (23).

$$t = A/\pi D \tag{23}$$

The tube length maximum L_m can then be calculated from the following relationship, derived from the Euler equation for fundamental mode buckling.

$$L_m = D\pi \sqrt{\frac{E}{8\ K\ \sigma_y}} \tag{24}$$

where E is the elastic modulus. Note that no factor of safety is included yet. It is advisable that a factor of safety on the length of at least 1.4 be chosen to ensure against fundamental buckling. The maximum length may also be determined from Figure 33, a plot of L/R versus R/t.

The total energy absorption potential E is calculated as

$$E = F_p F_{percent} L \cos \theta \tag{25}$$

where L is the length chosen for the tubes, less than the maximum length, and $F_{percent}$ is the fraction of the component height over which the component is an effective energy absorber.

The energy potential can then be checked against component requirements and evaluated. If the energy potential is too low, another iteration of the design process will be necessary. Note, that although a lower participation factor K means a lesser efficiency, the energy absorption capacity is greater since the allowable tube length increases.

SUMMARY OF MAJOR ENERGY-ABSORBING COMPONENTS

Each of the schemes investigated showed energy-absorption potential with the exception of the foam-core sandwich panel. Each of the schemes was either inherently capable of accepting service loads or else relatively simple design changes such as shear pins in the fluid dispersal shock absorbers provided the capability. Most units were direction sensitive with the possible exception of the air bag; usually if the energy-absorbing elements were assembled into a configuration, directional stability was achieved. Of course, for some units, a configurational assembly posed clearance and interference problems such as with the torsional tube. In other cases, the configuration was easily designed and was sometimes as simple as using several of the energy-absorbing elements in different directions such as with the tube in inextensional buckling.

Since weight is a critical parameter for an ASEV, a comparison of specific energy absorptions for the major component schemes is presented in Table 2. This comparison readily reveals the air bag and the tube in inextensional buckling to be the most efficient relative to weight, and the inverting tube is a somewhat distant third. While specific energy absorption is important, it is not sufficient by itself to rule out one scheme or to choose another.

TABLE 2 - SPECIFIC ENERGY ABSORPTIONS FOR VARIOUS COMPONENTS

	kip-ft/lb
Axial Inextensional Buckling:	
Buckling of Planar Tube Components:	
Realized	6.55
Potential	12.0
Bumper Tubes	1.5
Fluid Dispersal Shock Absorbers	0.2
Foam-Core Sandwich Panel	0
Air Bag	10.0*
General Motors Steering Columns	0.62
Inverting Tubes	3.0
Torsional Tubes	1.13

*Ideal conditions.

Most schemes approximated the ideal load-deflection curve with the exception of the torsional tube configuration; even there, the deviation would not be serious enough to rule out the scheme if it were otherwise advantageous.

Also, most schemes showed force-limiting capabilities. The air bag and the fluid dispersal shock absorbers showed the need for elaborate orifice configurations to exhibit this property. In the case of the air bag, acceptance of such a penalty appears feasible. The fluid dispersal shock absorbers are too low in specific energy absorption to warrant a similar penalty.

On the basis of the preceding discussion, it is obvious that the most promising schemes for further investigation and development are the air bag and the tube in inextensional buckling. Both have excellent specific energy-absorption capability, are easily stabilized directionally, can support operational loads, are load limiting, and can be made to approximate the ideal force-deflection characteristics. It seems advisable to pursue both schemes at this point rather than narrowing the choice further since, although possessing similar capabilities, they are different in the manner

in which they transmit the limit load to the craft structure. The inextensional tubes transmit essentially point loads and will most likely be used on the ASEV when a series of hard points are convenient. On the other hand, the air bag imparts a distributed load and would probably be used when a panel, rather than hard points, was convenient.

As any new schemes for energy absorption are studied, they will be compared with the two schemes chosen; at present, however, the schemes showing the most promise are the air bag and the tube in inextensional buckling. Further studies will be based upon these components.

LOAD DISTRIBUTION SYSTEM

From the specific energy-absorption capabilities demonstrated earlier for major energy-absorption components, it is apparent that more than one component must be involved in a collision to successfully halt a craft from any reasonable collision velocities. When the obstacle is large, and appears to be infinitely wide to the craft approaching in a direction perpendicular to the surface of the ice, then all obstacles on the contact side of the craft are automatically involved. In this case, all the energy-absorption material available in the collision direction is used.

It is anticipated, however, that reality will be somewhat different. It is more likely that the obstacle will be either irregularly shaped or smaller in width than the craft, and the craft is likely to approach the obstacle at some angle other than 90 degrees. The tendency therefore is to involve few of the energy-absorbing components. The load-distribution system is a structure spanning the major energy-absorbing components and is designed to distribute the loading to those components which would otherwise not have been involved. Naturally, if more energy-absorbing structure is involved, higher craft velocities can be tolerated in a collision.

It is obvious that a load-distribution system is necessary when the major energy-absorbing components are discrete units such as in the case of tube configurations. The system is necessary here to provide collision protection when the ice obstacle impinges on the craft extremity between two components. Without the distribution system, the collision impact would be felt directly on the structure to be protected, and damage would occur. In the case of a continuous major component such as the air bag,

the distribution system may be used to involve more of the air bag in the energy-absorbing process.

The load distribution system was previously shown in Figures 5 and 6. Another representation is shown in Figure 34, showing the system spanning several major components.

The load-distribution system must be designed to distribute the design loading elastically to a specified number of additional components. The system would then be allowed to form plastic hinges at the edges of the involved extremity structure and at the edges of the obstacle contact region. Figure 35 shows this concept.

As the collision progresses, the major energy-absorbing components within the obstacle contact region will gradually collapse, absorbing energy. The load-distribution system will distribute the impact load to components that will not otherwise have felt the loading, causing these components to collapse, absorbing additional energy. If sufficient energy cannot be absorbed within the elastic range of the distribution system, the system will form its plastic hinges, absorbing additional energy itself and allowing the major energy-absorbing components to collapse further.

Since it cannot be predicted where along the extremity structure a collision will occur, the load-distribution system must be continuous along a given side of the craft. It may be desirable to provide discontinuity at the "corners" of the craft to prevent excessive loading transverse to the major components, for example, along the side as a result of a bow collision.

The load-distribution system is analyzed as a continuous beam on rigid foundations, the components. The analysis must be done incrementally in displacement between the displacement when a given number of major components are collapsing to the displacement when one or more additional components begin collapsing. The problem was solved using the "three-moment equations"[14] for the case where the obstacle delivers a concentrated

---

[14]Borg, S. F. and J. J. Gennaro, "Advanced Structural Analysis," D. Van Nostrand Company, Inc., New York (1959).

load. When the load is at center span between two major components, the moment in the beam at the first noncollapsing major component is defined by

$$M_e = \frac{4K_{ed}}{24\ N + 19} \tag{26}$$

where M_e is the moment at the first noncollapsing component,

N is the number of components plastically collapsing on either side of the impact load, while the beam is completely elastic, and

K_{ed} is defined as follows

$$K_{ed} = \frac{-3\ P\ell}{2} \left[1/4 + 2 \sum_{m=1}^{N} m\right] - 3\ F_p\ell \left[2 \sum_{m=1}^{N-1} (N - m)(m) - 2N \sum_{m=1}^{N} m\right] \tag{27}$$

where P is the impact load,

ℓ is the span length between major components, and

F_p is the plastic collapse load of the major energy-absorbing components.

The load felt by the first nondeforming component is defined as follows

$$R_e = \frac{-\ 5\ K_{ed}}{\ell\ (24\ N + 19)} + P/2 - NF_p \tag{28}$$

where R_e is the load on the first nondeforming component. Note, that when N is chosen, the span length ℓ is known, and the system is designed for a value of F_p, Equations (27) and (28) become two simultaneous equations in P and K_{ed}.

When they are solved, the results may be used in Equation (26) to determine M_e. The following equation defines the shear at the extremity of the collapse region V

$$V = P/2 - N\ F_p \tag{29}$$

The moment and shear diagrams for the load-distribution system in the collapse region may now be defined. Although the moment at the point of the loading is usually maximum, other points in the system may have higher moments than that defined at the extremity of the region in Equation (26). Therefore plastic hinges may form at unexpected locations. Figure 36 presents shear and moment diagrams for two loading conditions. In Loading Condition A, the total number of components allowed to collapse is four, i.e., N = 2; in Condition B, the total number of collapsing components is six, i.e., N = 3. The value chosen for F_p is 25 kip. No inferences should be drawn from this assumed value as to typical craft capabilities; the value chosen is completely arbitrary.

Figure 37 shows the collapse mode of the load-distribution system, where N = 2, and the involved major energy-absorbing components. Note that none of the major components completely collapse. If plastic hinges form, as shown in the distribution beam, then the total impact-load and energy-absorption capability are calculated as follows

$$P = F_p \sum_{m=1}^{2k} x_m + \frac{4 M_p \theta}{x_{\mathbb{C}}} \tag{30}$$

and

$$E = P x_{\mathbb{C}}$$

where P is the impact load,

x_m is the maximum crush distance for the mth component,

M_p is the plastic moment capability of the distribution beam,

θ is the angle of plastic rotation of each plastic hinge,

$x_{\mathbb{C}}$ is the maximum crush distance for the major components under the loads or the component depth, and

E is the energy-absorption capability.

Note that the numerator of the second term of Equation (30) is the energy contribution by the distribution beam.

The parameter k is the number of components on either side of the load which will collapse plastically after the formation of the plastic hinge at the point of load. This must be determined by analyzing the

system illustrated for increasing values of k, until the beam exhibits a second plastic hinge. The value of k is then defined as the value which first causes a second plastic hinge to form in the distribution beam.

In order to determine the location of the second or outer plastic hinges, it is necessary to determine where in the distribution beam, the second highest moment peak exists. Since this location is next in line to reach the elastic limit, the plastic hinge will next form at that location. From the moment diagrams of Figure 36, it is seen that for a distribution beam strong enough to span two or more collapsing components before the formation of the initial plastic hinge, the second hinge will form at the third major component from the point of load. Since for somewhat stronger beams, the second hinge will continue to form at this same point, it is not greatly advantageous to require greater strengths of the distribution beam than are necessary to span two collapsing components external to the load point. Additional energy is gained in the rotation of the beam when the plastic moment is increased; however, no additional major energy-absorbing components are added for a range of beam strength. Since energy is absorbed much more efficiently in the major components than in the distribution beam, it is more advantageous to design the beam for the lower end of this strength range.

It may be necessary to investigate the situation beyond the beam strength range discussed previously if sufficient energy cannot be absorbed within the involved collision area of this beam strength. For the present, however, it will be assumed that two components on each side of the impact load area will collapse and, therefore, that k has a value of two.

All of the relationships presented here are derived for the case where the load is concentrated at center span. It can be shown that this is the worst-case loading; therefore, it is chosen as the design loading. If the impact load actually occurs at a different location, such as directly over a major component, the system will have somewhat more capability than in the design situation.

Although the preceding discussion has been for the case where the impact load was a concentrated load, the theory is easily extended to a distributed impact load in the following manner. The distribution system is treated as if the entire obstacle contact area is displaced as a unit,

allowing no internal shear or rotation. All components within the contact area may therefore be totally crushed. The distribution system is designed as if the load were concentrated at the boundary of the obstacle contact area. The plastic hinges form there and at the first noncollapsing major components; see Figure 38.

When the load-distribution system is designed, an additional consideration must be made. The system must be designed so that the impact load does not cause local collapse of the distribution beam in the obstacle contact area. This would result in premature formation of the initial plastic hinge in this area. Not only would the plastic moment be considerably lower but the beam would not be capable of distributing the collision load to additional major energy-absorbing components as effectively.

BUMPER PROTECTION

To avoid minor damage to major energy-absorption components, it may be deemed advisable to locate a bumper system external to the load-distribution system. The bumper would function as a low-energy-level protection device. In minor instances of craft contact with a dock, another craft, a buoy, or perhaps a ship, the bumper system would function as an energy absorber and a load-limiting device to prevent damage from such instances to the major protection components. This protection may be useful to avoid more elaborate repairs on the major components.

Since the bumper would be capable of absorbing only extremely low energy, the events for which the bumper would provide protection for a craft as massive as the ASEV, would certainly be very low velocity collisions. In fact, it may be more proper to term such events obstacle contacts rather than collisions.

The cylindrical tube is proposed as a bumper. Lengths of the tube would be installed along the load-distribution member so that an obstacle contact would crush one side of the tube toward the other; see Figure 39.

Some work has been done[15-17] in defining the dynamic load-deflection curve for steel tubes loaded in this manner. Since the bumper tubes for the ASEV would most likely be aluminum due to weight constraints, additional tests have been conducted to verify the relationships for aluminum. These tests will be documented separately.

Test results indicate that the load-deflection characteristics of bumper tubes are a similar function of the tube dimensions as presented by Perrone.[16] A sample acceleration time history is presented in Figure 40. Since the force is the mass of the drop-test vehicle times the acceleration, the curve presented is a force representation as well. Note that force rises to and maintains a fairly constant value. It has been determined that the magnitude of the crush force is approximately defined by the following equation

$$F_b = \frac{\sigma_y L t^3}{R} \tag{32}$$

where F_b is the bumper crush force,

σ_y is the material yield stress,

L is the length of the tube involved in the collision,

t is the wall thickness of the tube, and

R is the tube radius.

Figure 41 presents this force as a function of the critical tube dimensions.

A further investigation of the test data will enable a better definition of the effective tube length for a contact when the obstacle is

---

[15] Elmer, G. D., "Design Formulas for Yielding Shock Mounts," David Taylor Model Basin Report 1287 (Jan 1959).

[16] Perrone, N., "Impulsively Loaded Strain Hardened Rate-Sensitive Rings and Tubes," Report 10, National Science Foundation Grant GK782, Catholic University of America, Washington, D. C. (Apr 1969).

[17] Hashmall, H., "An Evaluation of Some Elastic-Plastic Shock Mounts," NSRDC Report 2973 (Feb 1969).

smaller than the tube length. This investigation should also yield a design crush distance for the tube. The crush distance and effective tube length will most likely be functions of the wall thickness and tube radius.

When the effective length is fully defined, the bumper crush force will be defined; when the crush distance is defined, it will be a simple matter to define the bumper system energy capability and therefore to design the bumper.

UNDERBODY STRUCTURE-PROTECTION APPROACH

A feasibility investigation is planned for collision protection of the underbody structure. Underbody collision will most likely occur with relatively small obstacles, and therefore the danger of obstacle intrusion is severe.

If the craft velocity were to be separated into a component along the underbody and a component toward the obstacle, the kinetic energy of the craft could be calculated for each of the two directions; see Figure 42. In situations in which the ASEV might encounter an underbody collision obstacle, the maximum possible velocity component along the underbody would likely be far greater than the velocity component toward the obstacle. This is because velocity along the underbody will be mostly a function of craft speed, while gravity forces on the craft will be the primary influence on the craft velocity toward the obstacle. It should be noted that the velocity component toward the obstacle at locations distant from the craft center of gravity may be either increased or decreased by any craft motions in roll or pitch.

Since kinetic energy is a function of the component velocity squared, it is obvious that far more kinetic energy exists in the direction along the underbody. This suggests a "skid pan" approach to underbody collision protection.

In the skid pan approach, the aim is to absorb the kinetic energy in the direction toward the obstacle, thereby reducing the velocity component in that direction to zero. If this task can be accomplished with relatively small deflections, and the obstacle is not driven into the sides of the "dent," the craft will slide along the obstacle, without diminishing

velocity, in the direction along the craft underbody. If this can be accomplished, it will not be necessary to deal with the much larger kinetic energy in the direction along the underbody. Protection is therefore aimed at preventing intrusion.

Another approach is to accept local intrusion of the obstacle through the underbody and to plan for it, perhaps with a double bottom arrangement and a structure designed to limit intrusion and absorb energy in the direction toward the obstacle. If this approach is followed, however, it must be accompanied by an underbody design whereby the obstacle, once within the double bottom area, would feel little resistance to motion in the plane of the underbody. Since this motion could be in a fairly wide range of angles from the longitudinal axis of the craft, the underbody structure must present little resistance to an obstacle over a range of directions. It is necessary to allow the craft to continue over the obstacle, rather than attempting to absorb the energy in this direction, in order to prevent the craft from being hung up on the obstacle after collision.

Many problems are foreseen in protecting the craft underbody. The major problem appears to be weight. The structure required to resist the weight of the craft on a small area, let alone absorb energy from that mass moving at a velocity, is anticipated to be quite heavy. Also, the craft dimensions are such that limited vertical space is anticipated for the underbody structure. This conflicts with the criterion for minimum stopping distance to provide a survivable acceleration environment during collision. In addition, since the underbody collision will most likely not occur at the location of the craft center of mass, pitch and roll motions are likely to result. When underbody collision forces are better defined, these motions should be investigated to determine their severity.

The underbody collision-protection feasibility study has recently begun at the Center. The results of that study will be reported separately.

SUMMARY

The ASEV must be protected against damage resulting from collision with ice obstacles. The nature of the craft and its operation suggests the need for protection in the peripheral structure or extremity structure

along the sides of the craft and especially in the bow area. Protection is also necessary on the craft underbody since collision with pinnacles and ice rubble in this area is possible. In the area of underbody protection, a feasibility study is underway. Preliminary indications are that underbody protection may be heavy. Several problems involved in designing underbody structure and criteria for this design are presented. Further work on the underbody structure will be presented in a separate document by the Naval Ship Research and Development Center.

Major energy-absorbing components for extremity-structure protection have been studied both theoretically and in a few cases experimentally. Two candidate schemes emerge as the most promising, the air bag concept and tubes in axial inextensional buckling. Both concepts will be further investigated and reported individually.

A load-distribution system is proposed which will offer protection against obstacle impact between two discrete major components. The distribution system is also shown capable of contributing to the energy-absorption capabilities of the protection system by involving more major components and by itself absorbing energy.

In addition, a bumper system is briefly studied which will absorb minor collision impact such as in contact of the ASEV with a buoy or with a wharf. Without bumpers such contacts may cause minor damage to the major energy-absorbing components where damage repair is somewhat more difficult than replacing an external bumper.

ACKNOWLEDGMENTS

The author extends grateful acknowledgment to William R. Conley of the Naval Ship Research and Development Center for his work in evaluating the energy-absorbing characteristics of the air bag and the bumper tubes. His help in conducting the experimental work on inextensional buckling of axially loaded tubes and on crushing the foam-core sandwich panels is also greatly appreciated.

The author also acknowledges the work of Jackson T. Hawkins and Arthur E. Hirsch for their work at the Center on the energy-absorbing steering column, and Kenneth W. Goben of the Center for his work on elastic-plastic shock structures for shipboard foundations.

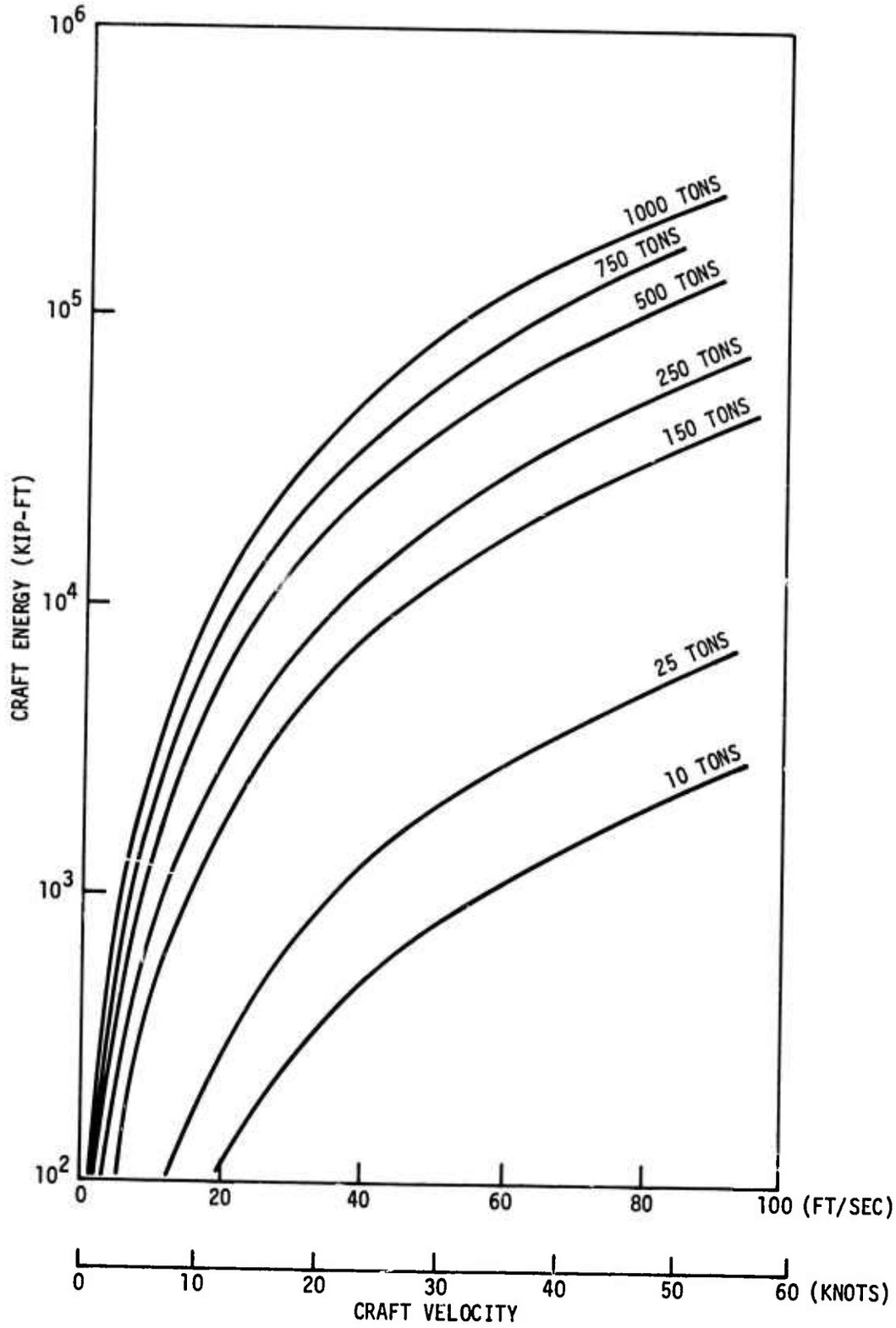

Figure 1 - Kinetic Energy versus Craft Velocity

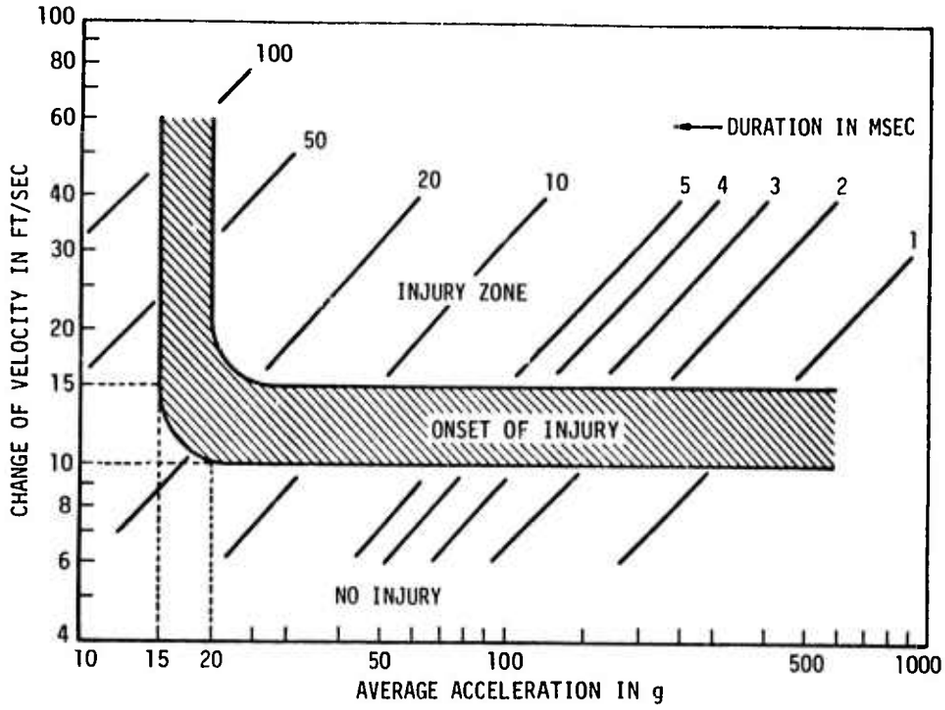

Figure 2 - Tolerance of Man to Short-Duration Shock Motion

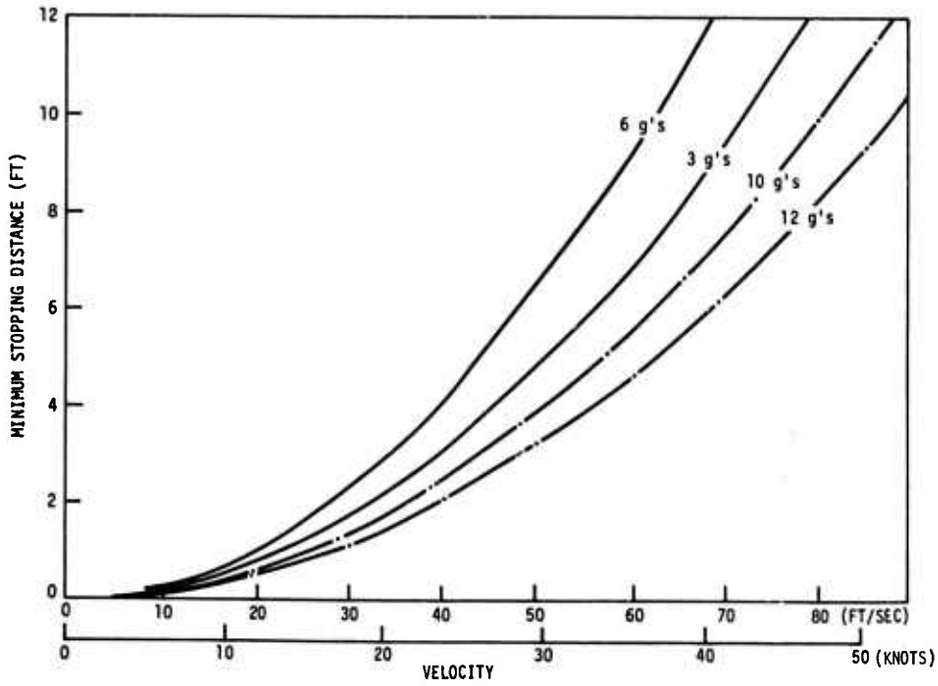

Figure 3 - Minimum Stopping Distance for Critical Acceleration Environment

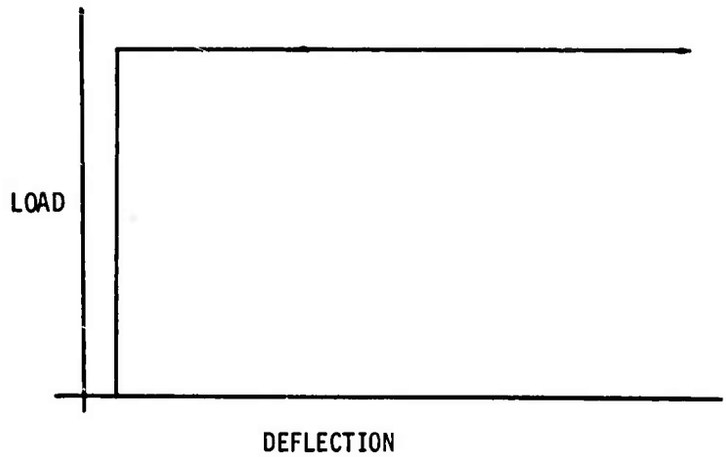

Figure 4 - Ideal Load-Deflection Curve

Figure 5 - Schematic of the Extremity Structure

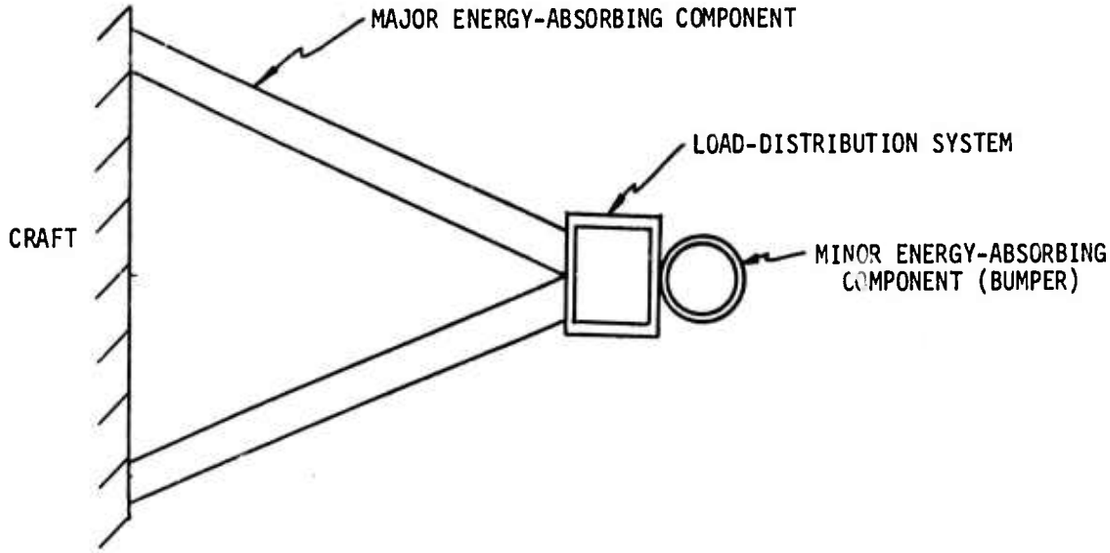

Figure 6 - Possible Configuration of Extremity Structure

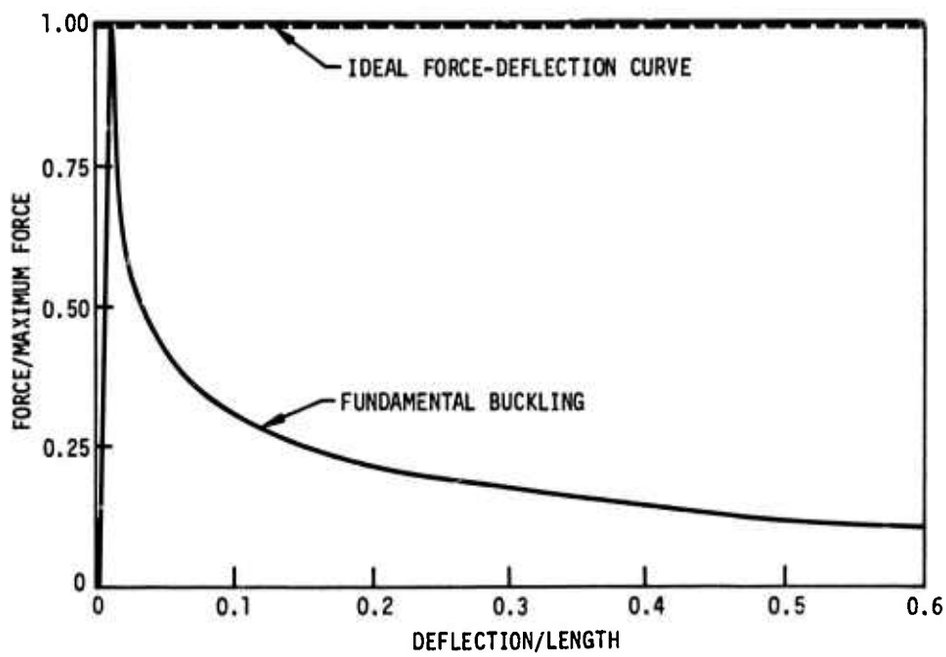

Figure 7 - Comparison of Force-Deflection Characteristics for a Fundamental Buckling Component with the Ideal

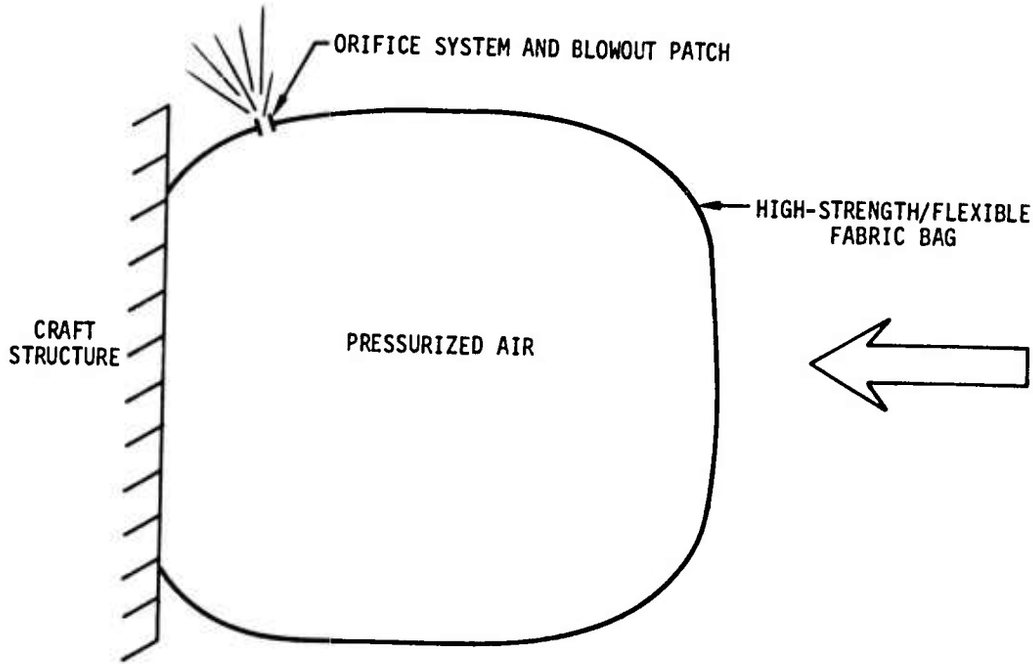

Figure 8 - Air Bag as an Energy Absorber

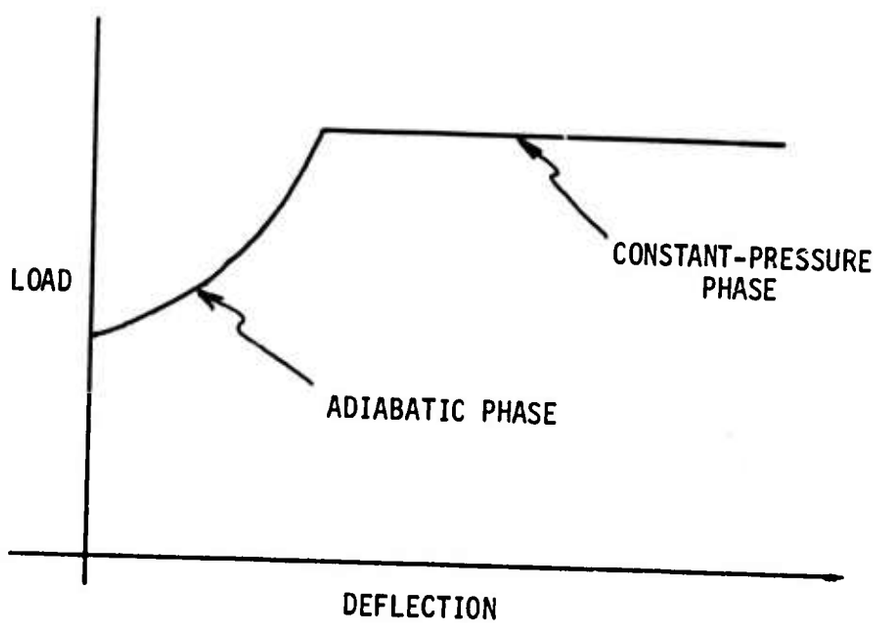

Figure 9 - Influence of Adiabatic Phase on Load-Deflection Curve for an Air Bag

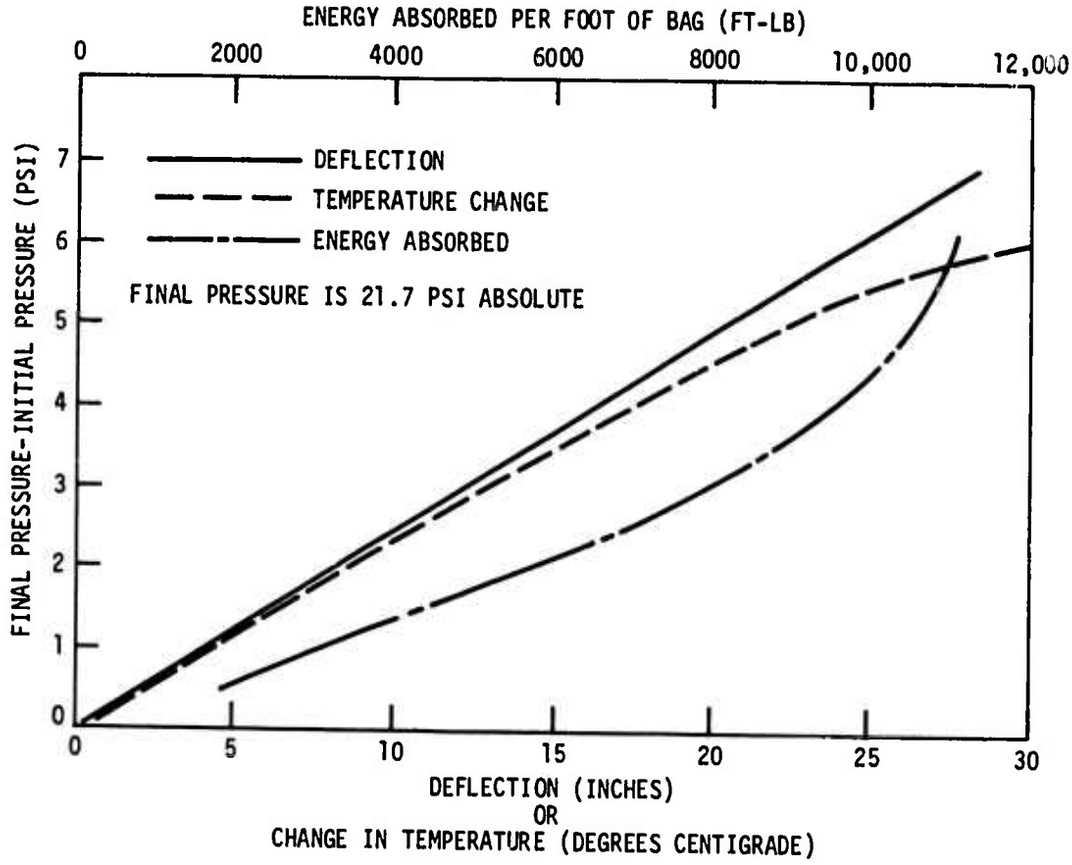

Figure 10 - Adiabatic Compression in a Sample Gas-Filled Bag

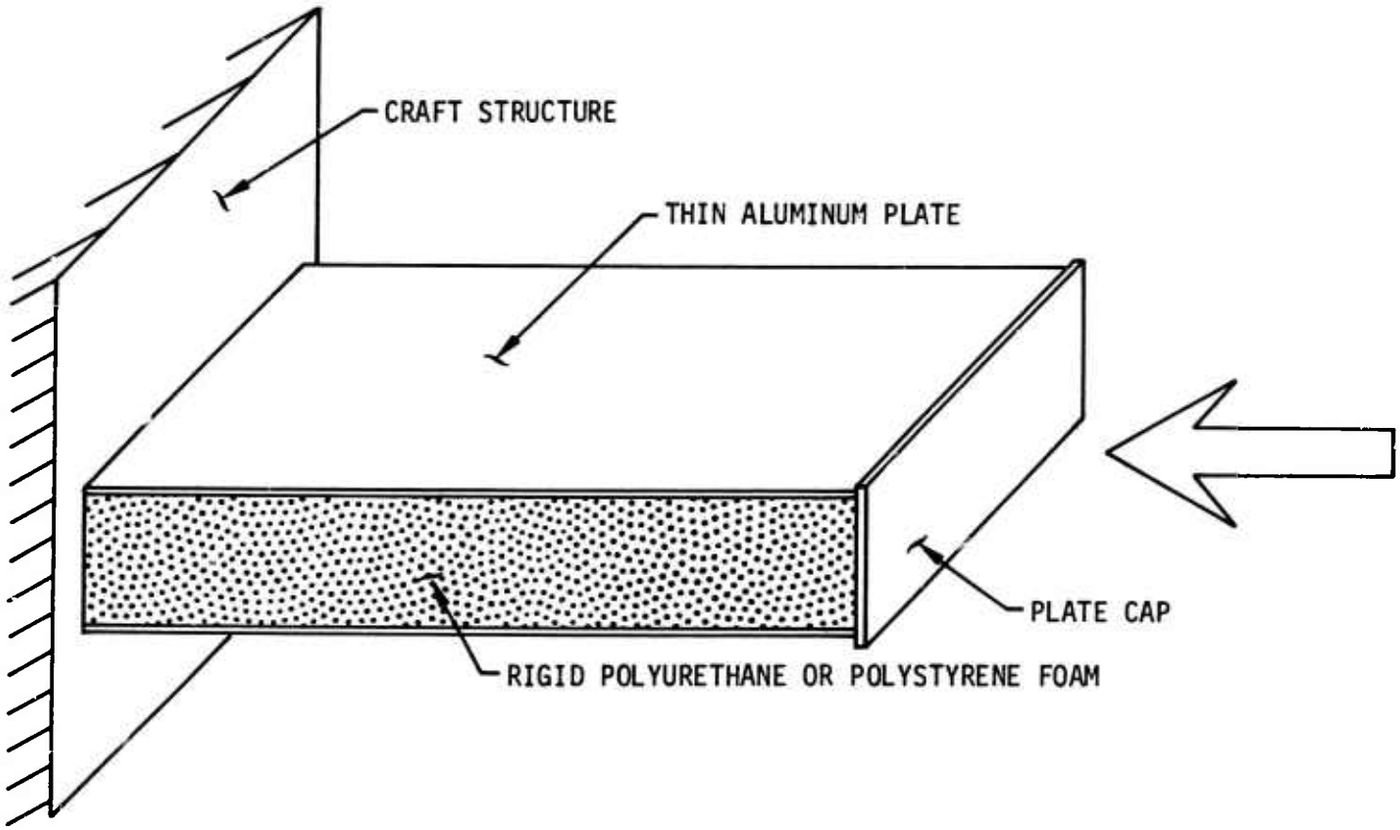

Figure 11 - Foam-Core Sandwich Panel

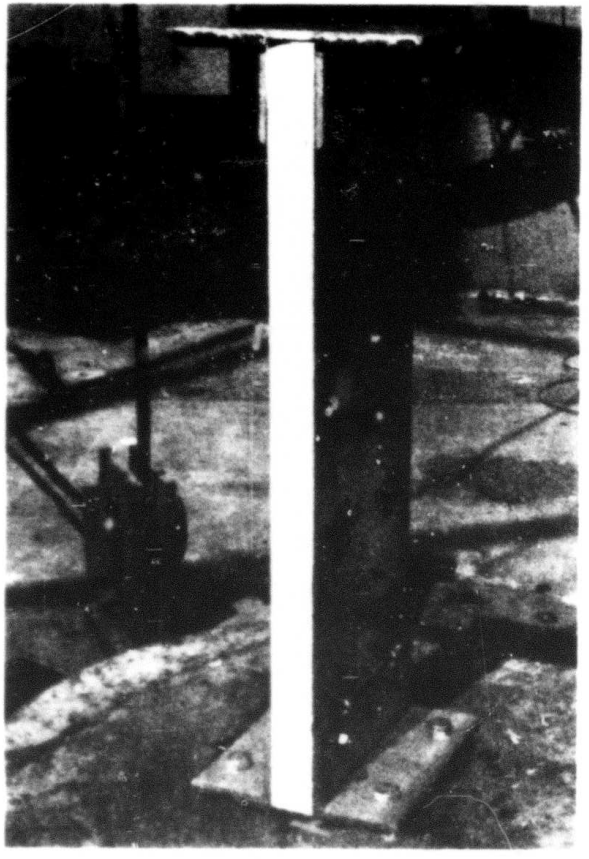

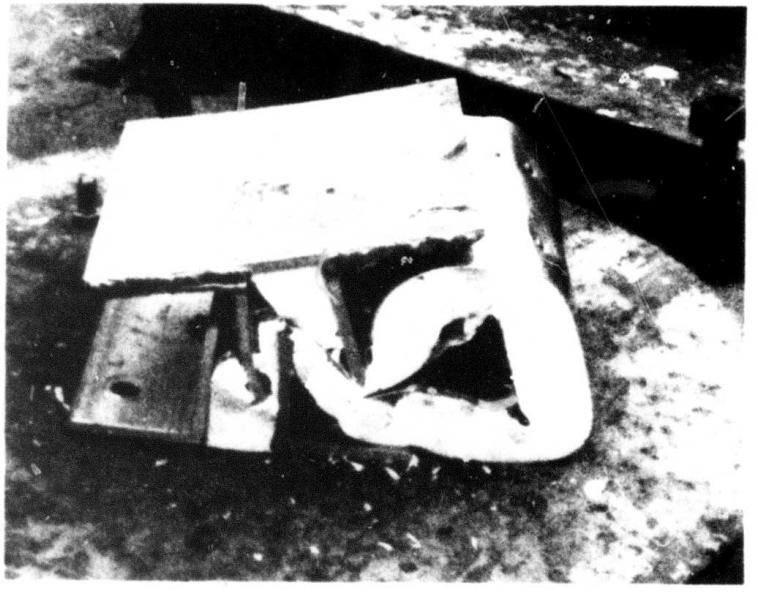

Figure 12 - Illustration of Collision Damage to Foam-Core Sandwich Panel

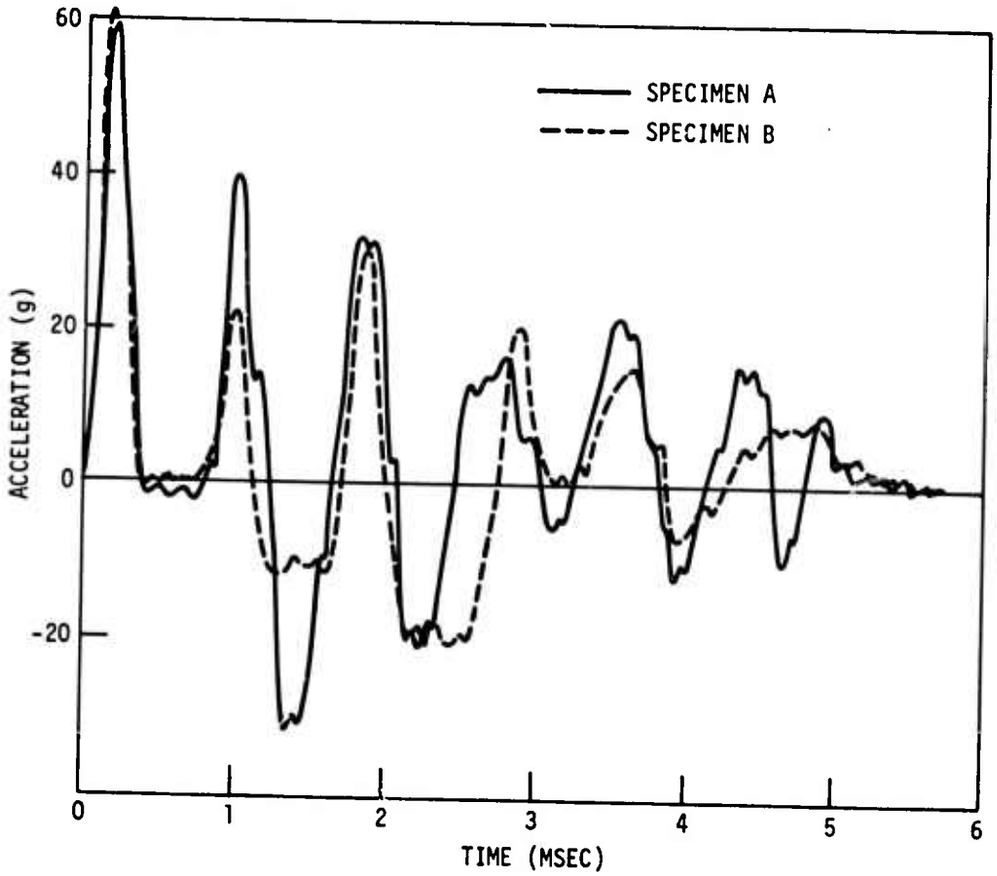

Figure 13 - Experimental Data on Collapse of Foam-Core Sandwich Panels

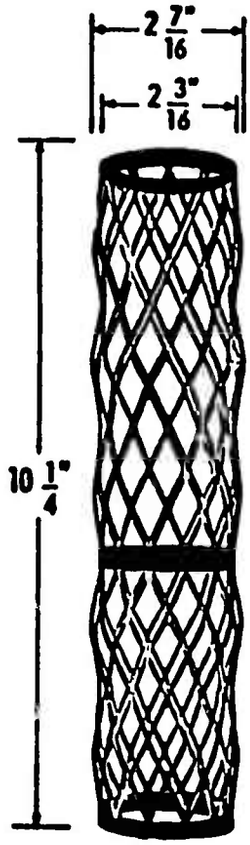

Figure 14 - General Motors Energy-Absorbing Steering Column

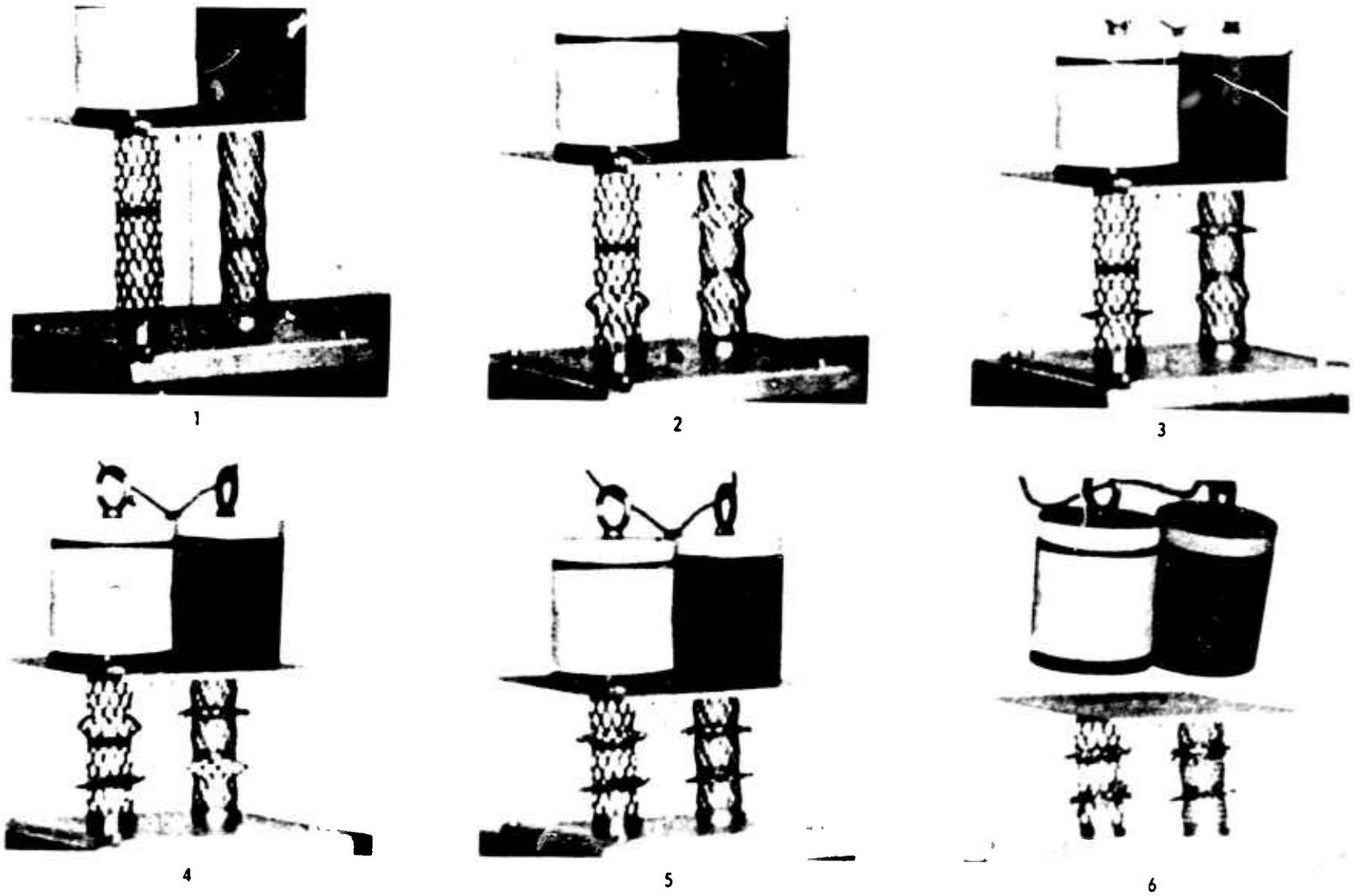

Figure 15 - Stages of Collapse of Two Energy-Absorbing Steering Columns

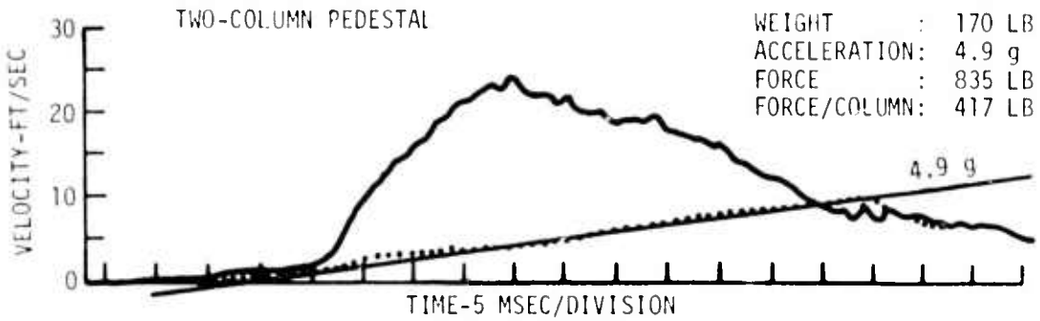

Figure 16 - Experimental Data for Energy-Absorbing Steering Column

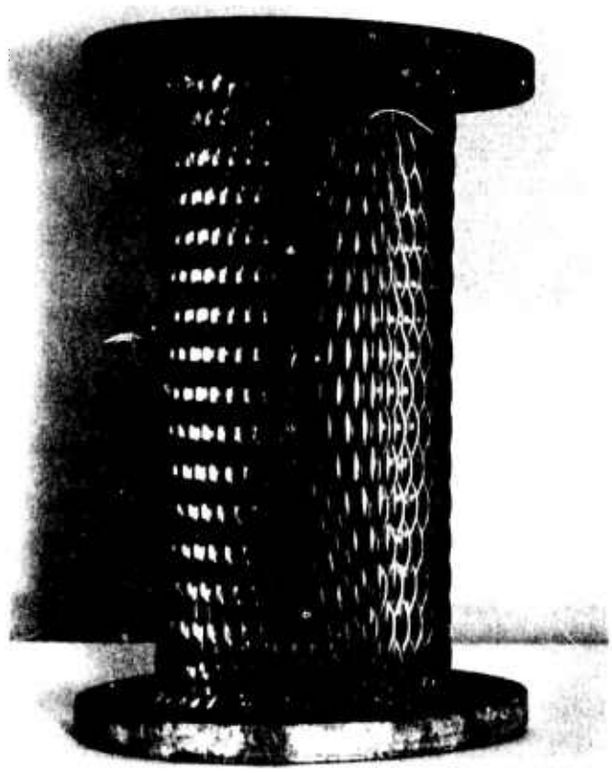

Figure 17 - Expanded Metal in a Cylindrical Shock Absorber

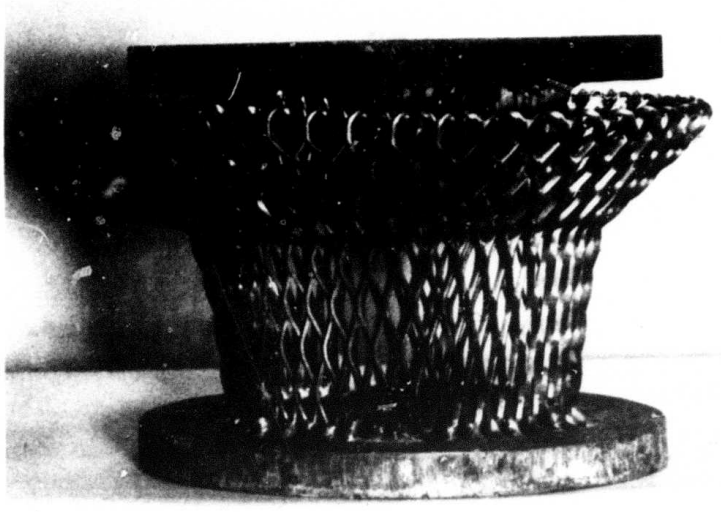

Figure 18 - Impact Damage to Expanded-Metal Shock Absorber

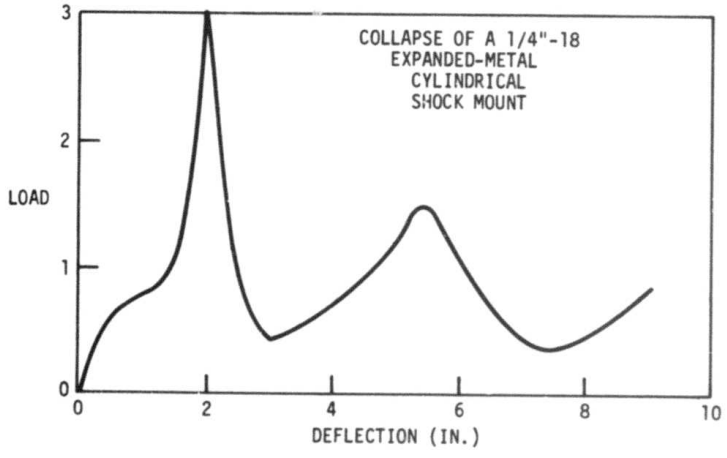

Figure 19 - Load-Deflection Curve for an Expanded-Metal Tube

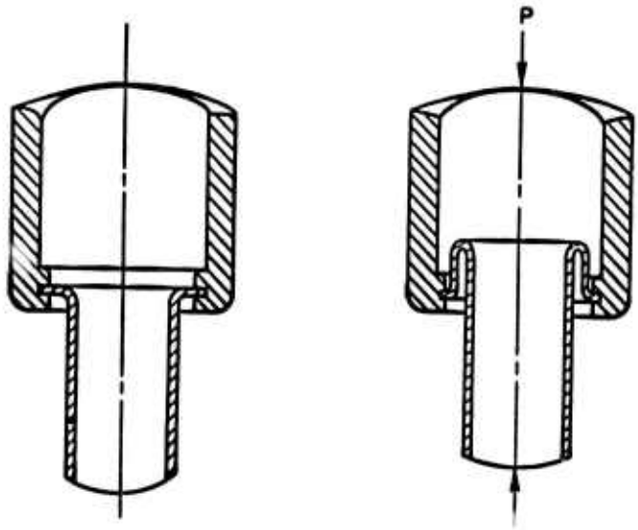

Figure 20a - Inside-out Inversion

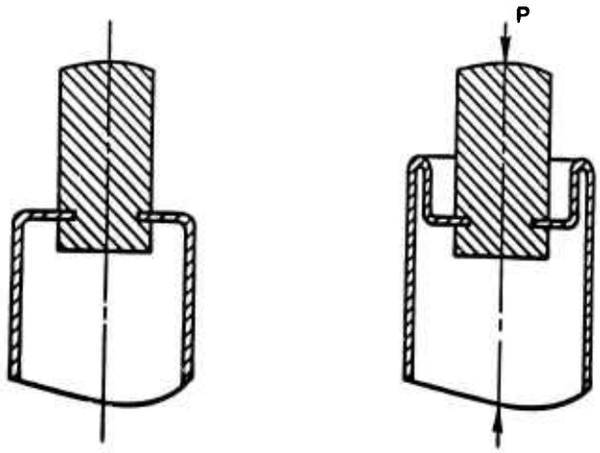

Figure 20b - Outside-in Inversion

Figure 20 - Inverting Tube

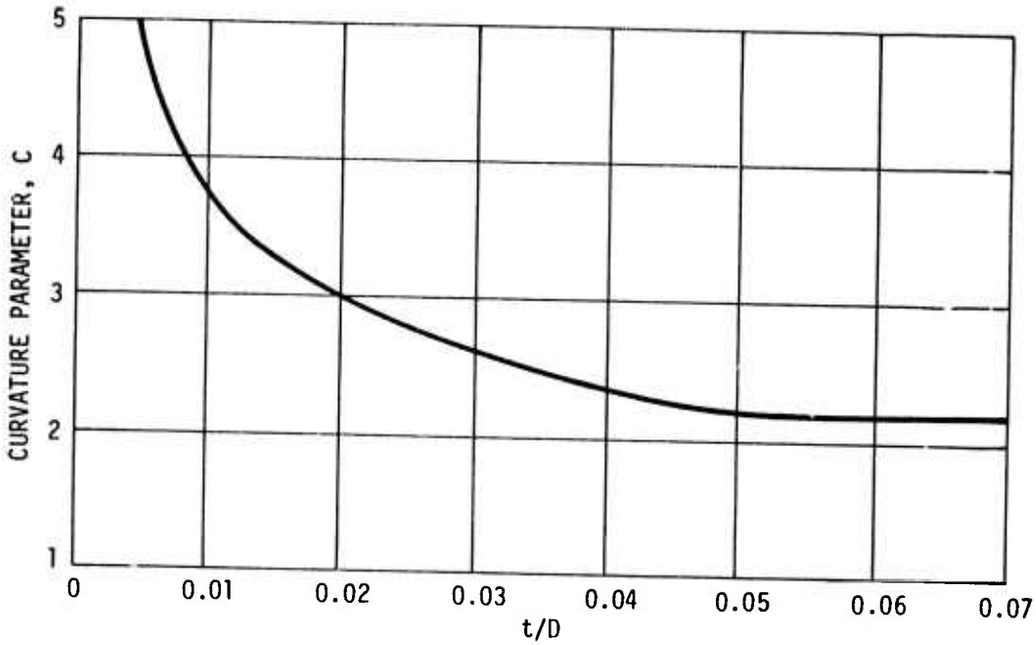

Figure 21 - Experimentally Defined Curvature Parameter

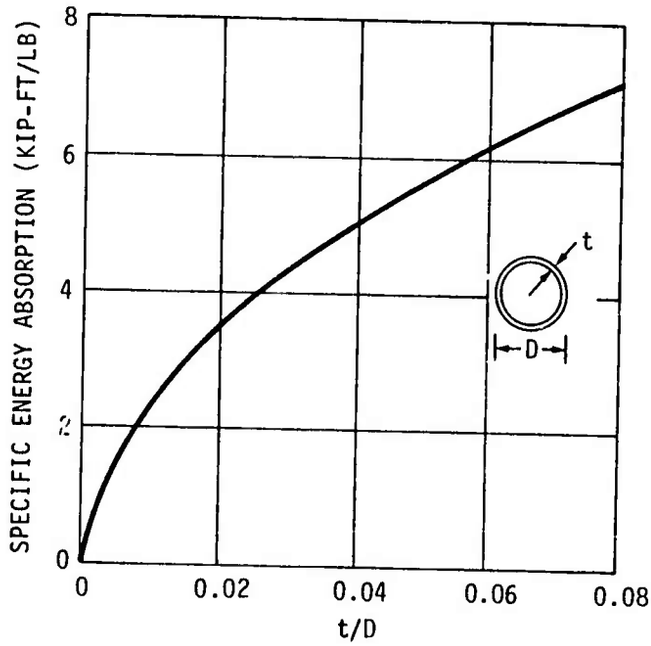

Figure 22 - Specific Energy Absorption for Inverting Tube

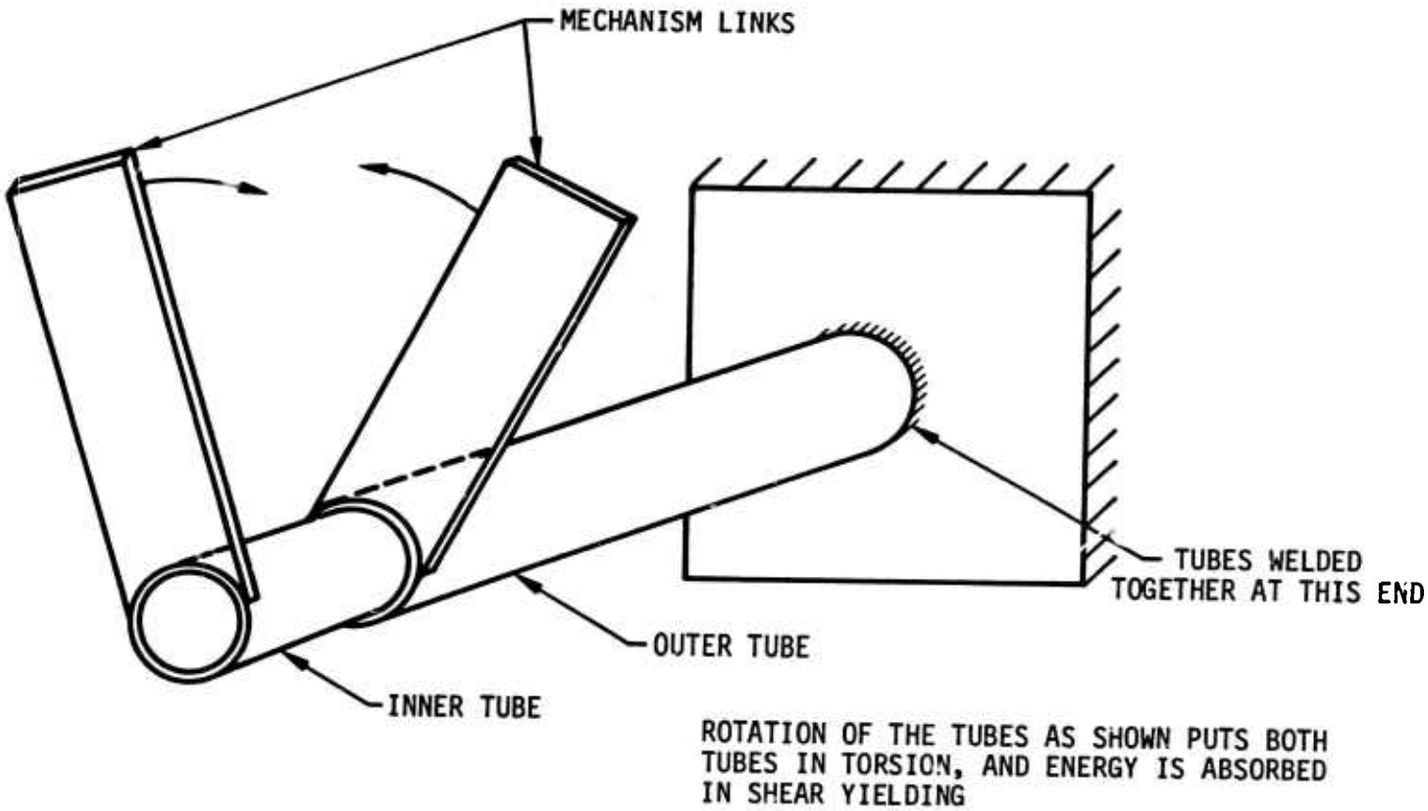

Figure 23 - Torsional Tube

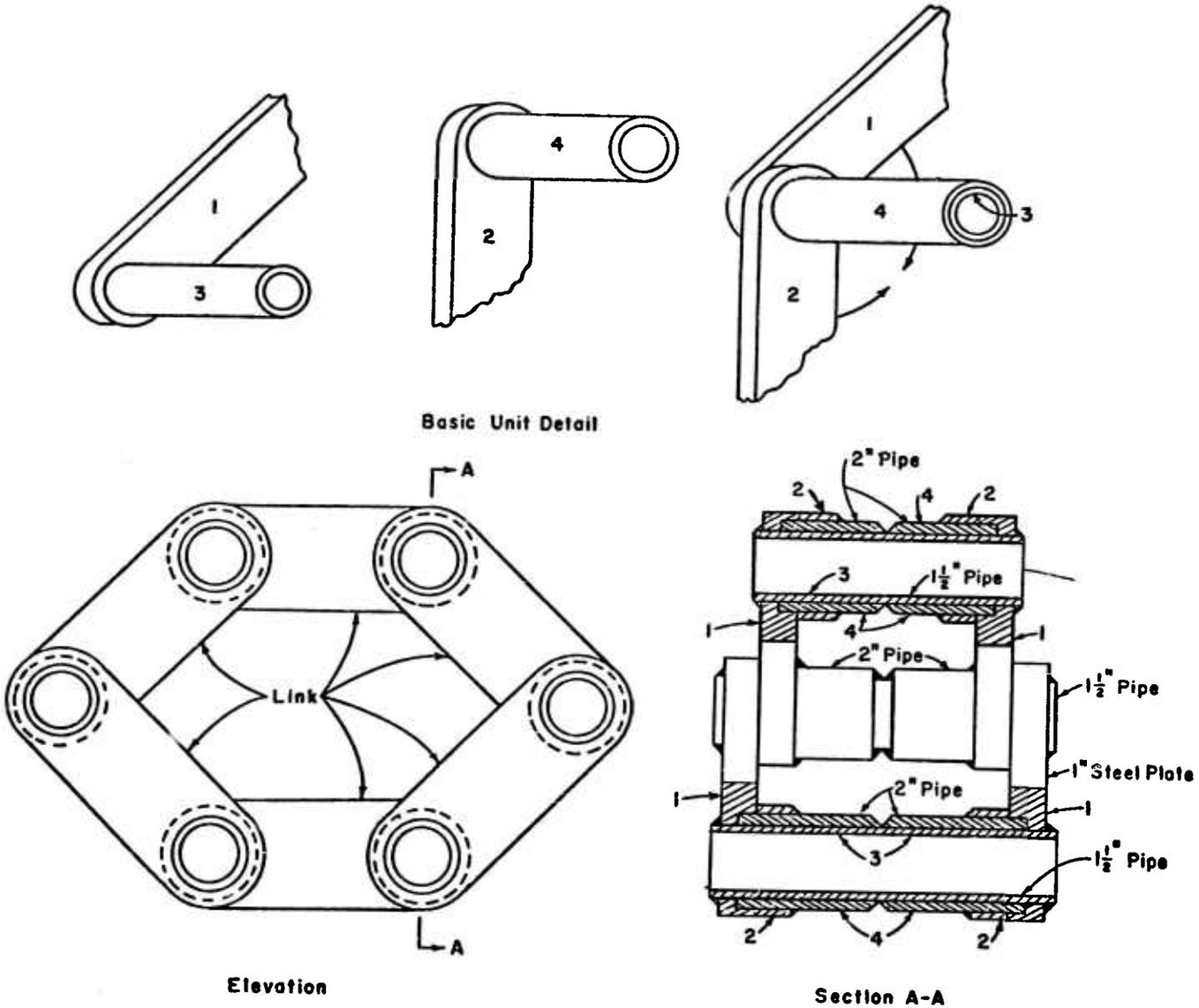

Figure 24 - Torsion Tube Shock Mount

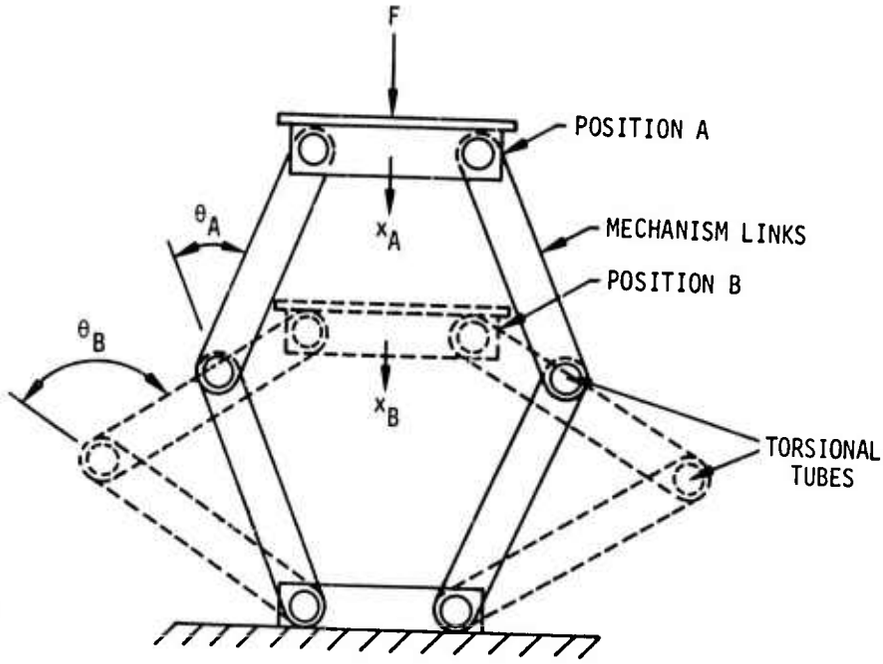

CORRESPONDING TO A dx_A THERE IS A $d\theta_A$, AND, CORRESPONDING TO A dx_B, THERE IS A $d\theta_B$. IF $dx_A = dx_B$, THEN DUE TO GEOMETRY CHANGES $d\theta_A > d\theta_B$.

Figure 25 - Influence of Geometry Changes on Torsional Tube Configuration

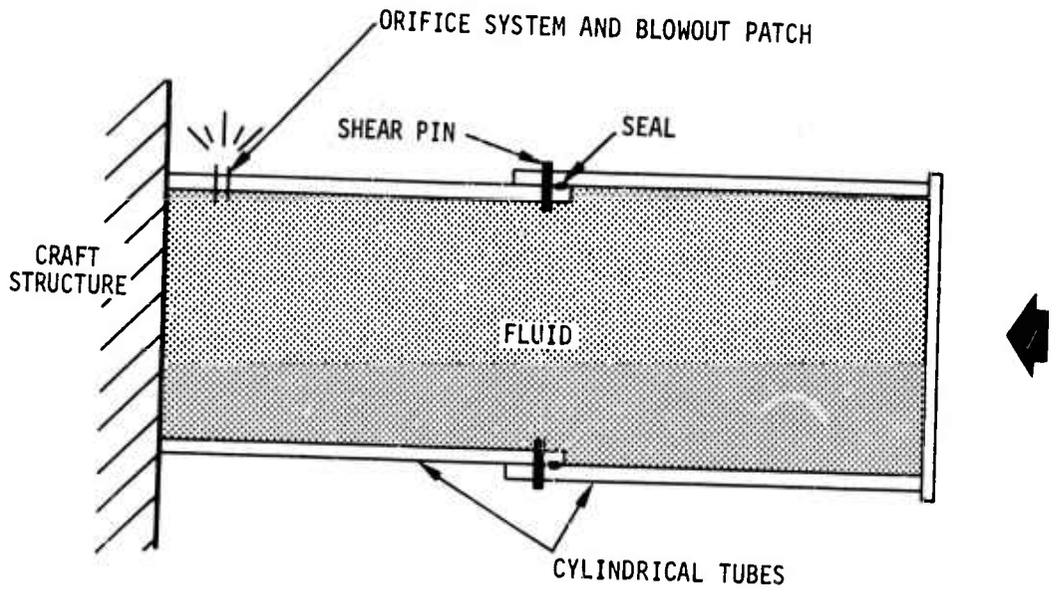

Figure 26 - Fluid Dispersal Shock Absorber

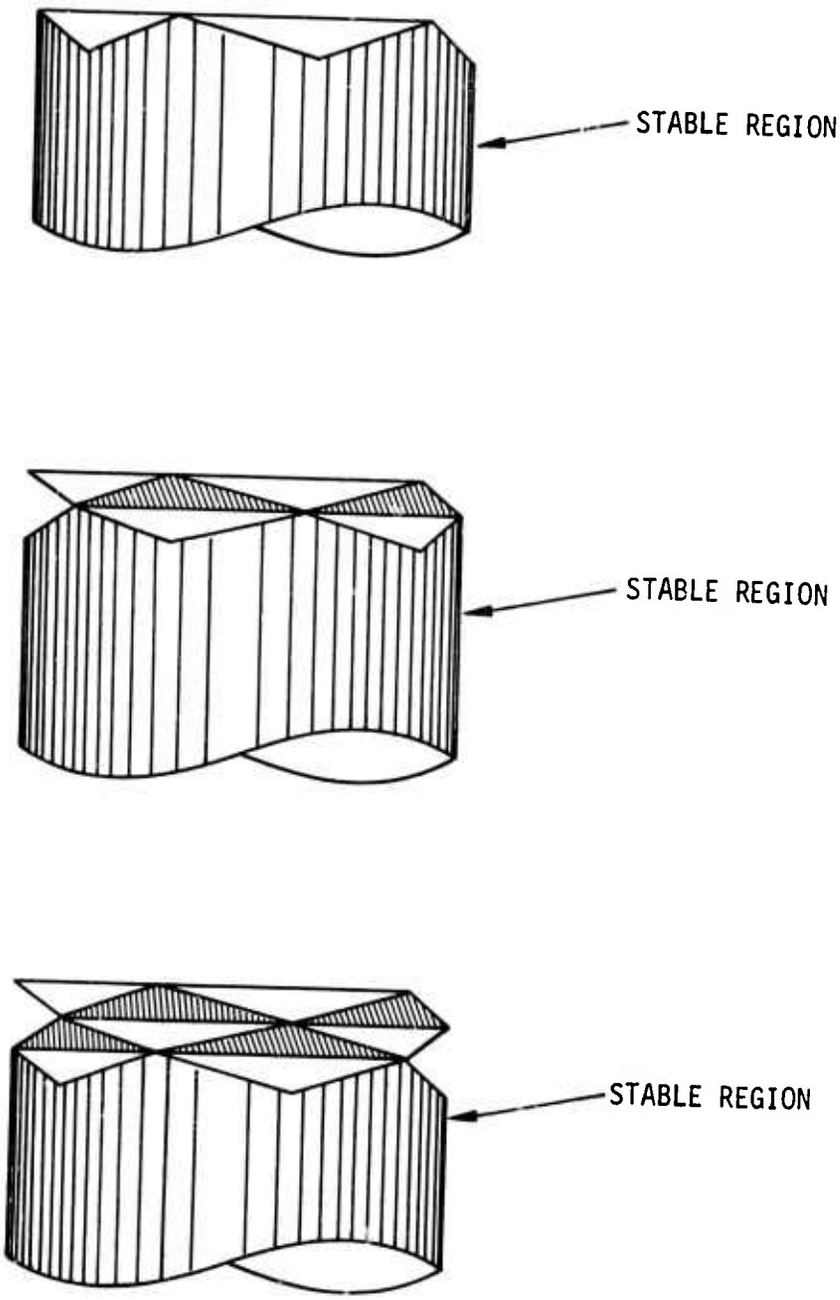

Figure 27 - Progressive Inextensional Buckling

Figure 28 - Typical Configuration of Tube, Collapsed from Inextensional Buckling

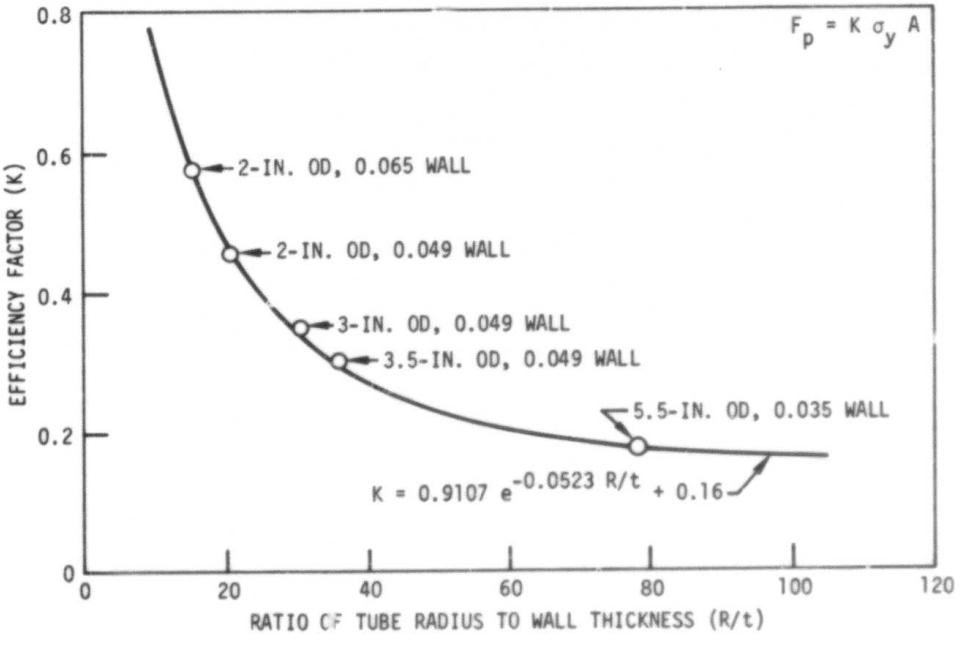

Figure 29 - Experimentally Determined Efficiency Factors, Inextensional Buckling

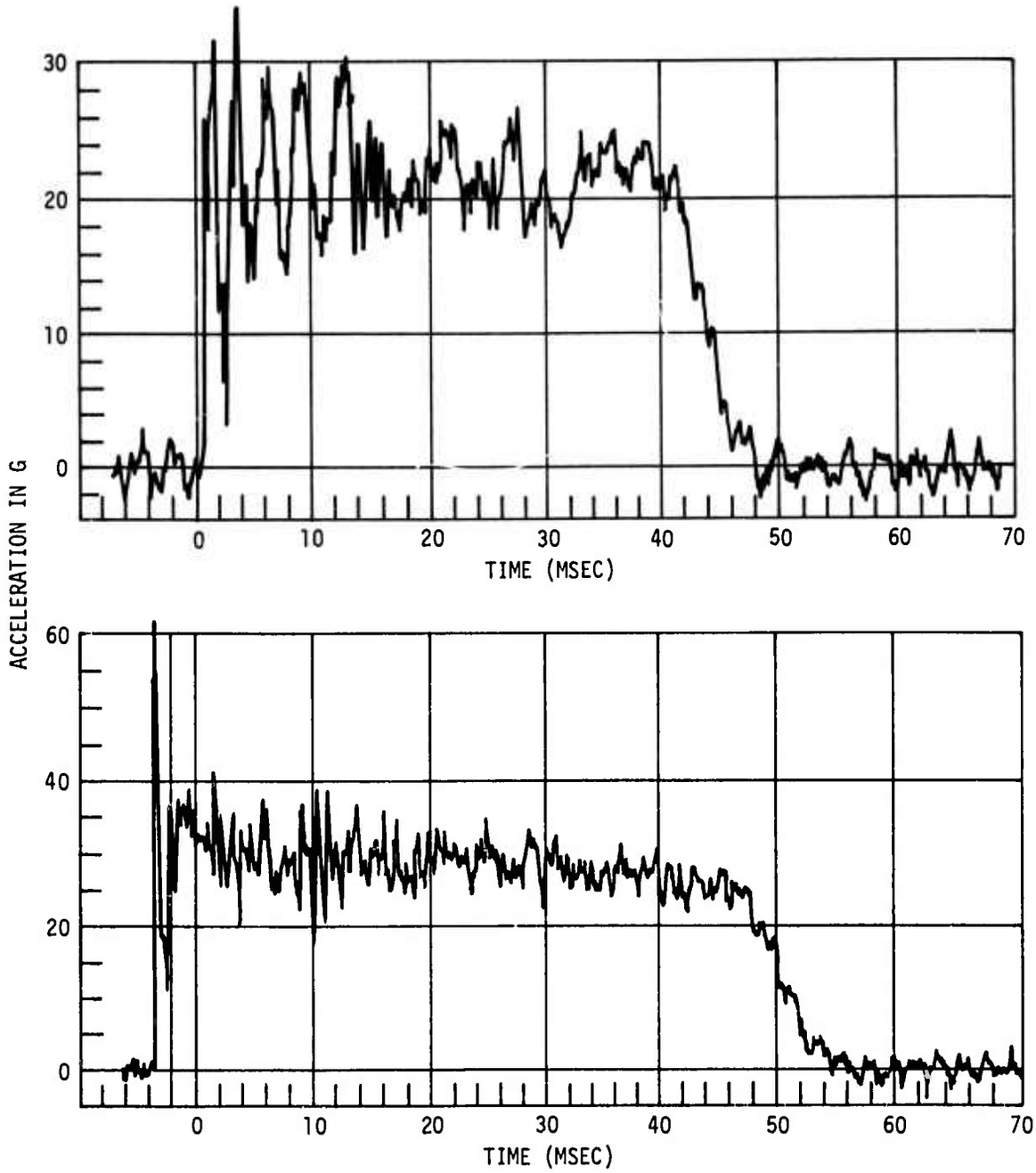

Figure 30 - Experimental Data for the Tube in Inextensional Buckling

Figure 31 - A Four Tube, Three-Dimensional Configuration

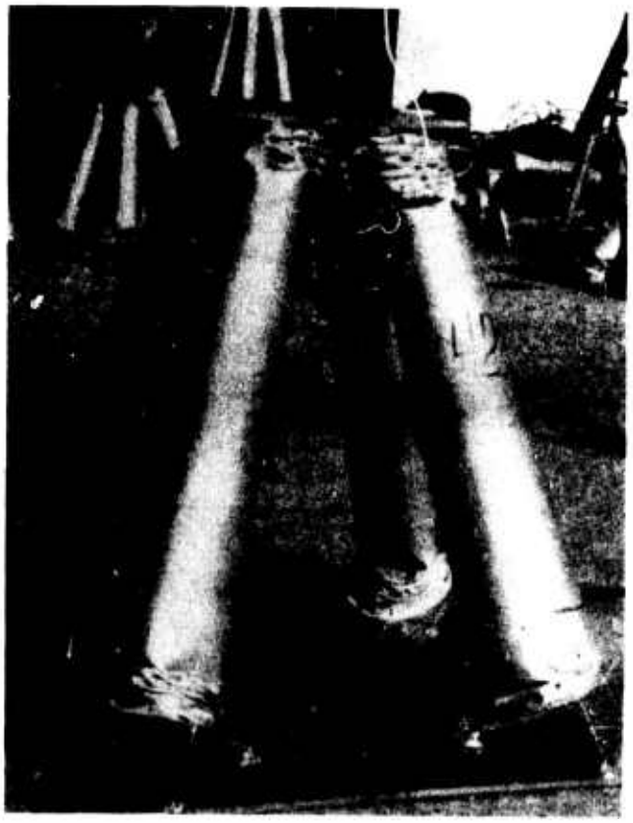

Figure 32 - Three-Dimensional Configuration after Collision Testing

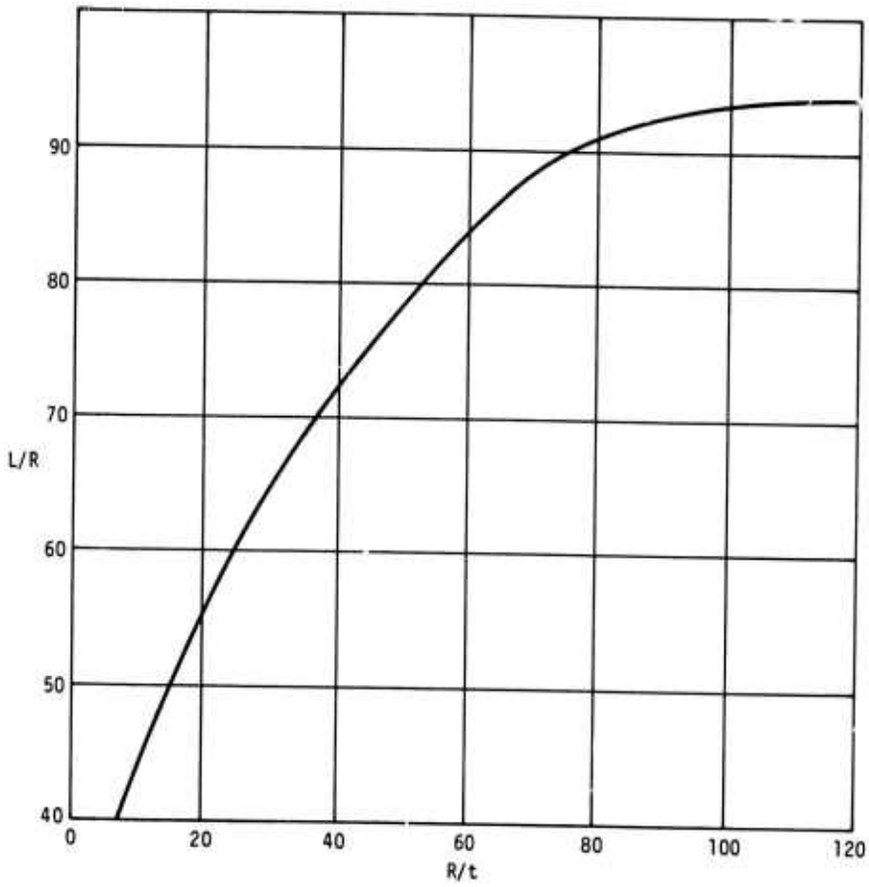

Figure 33 - L/R versus R/t for 6061-T6 Aluminum Tubes

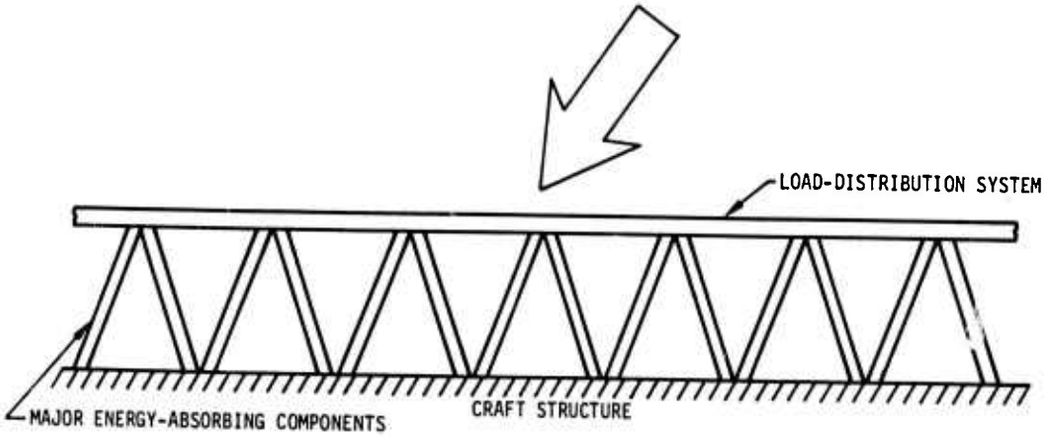

Figure 34 - An Integrated Protection System, Extremity Structure

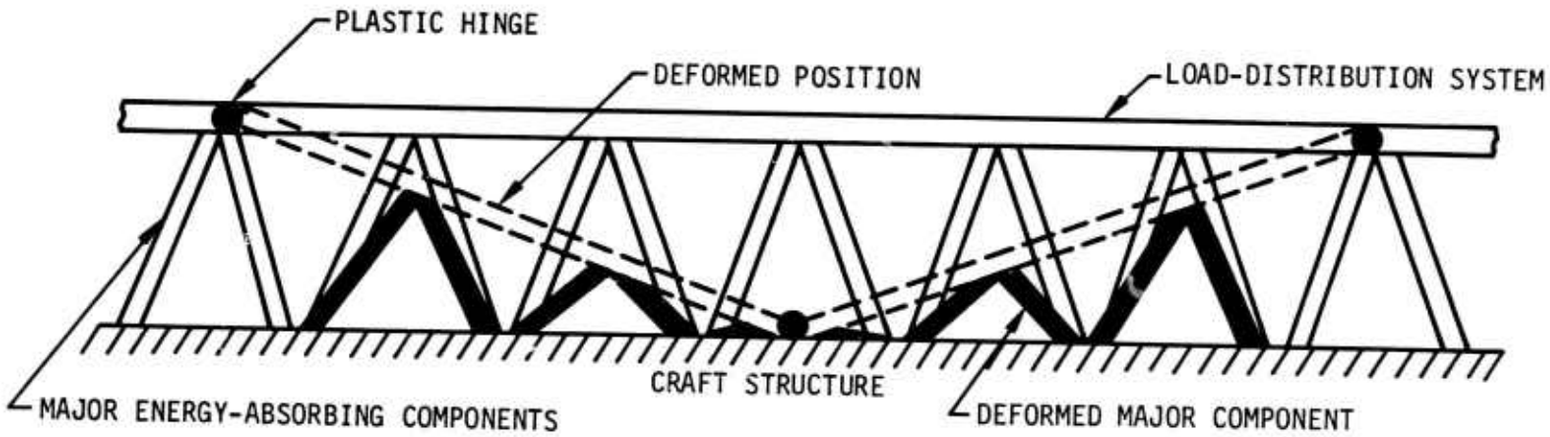

Figure 35 - Collapse of Load-Distribution System under a Pointed Obstacle

Figure 36 - Shear and Moment Diagrams for Distribution Systems and Various Collapsing Components

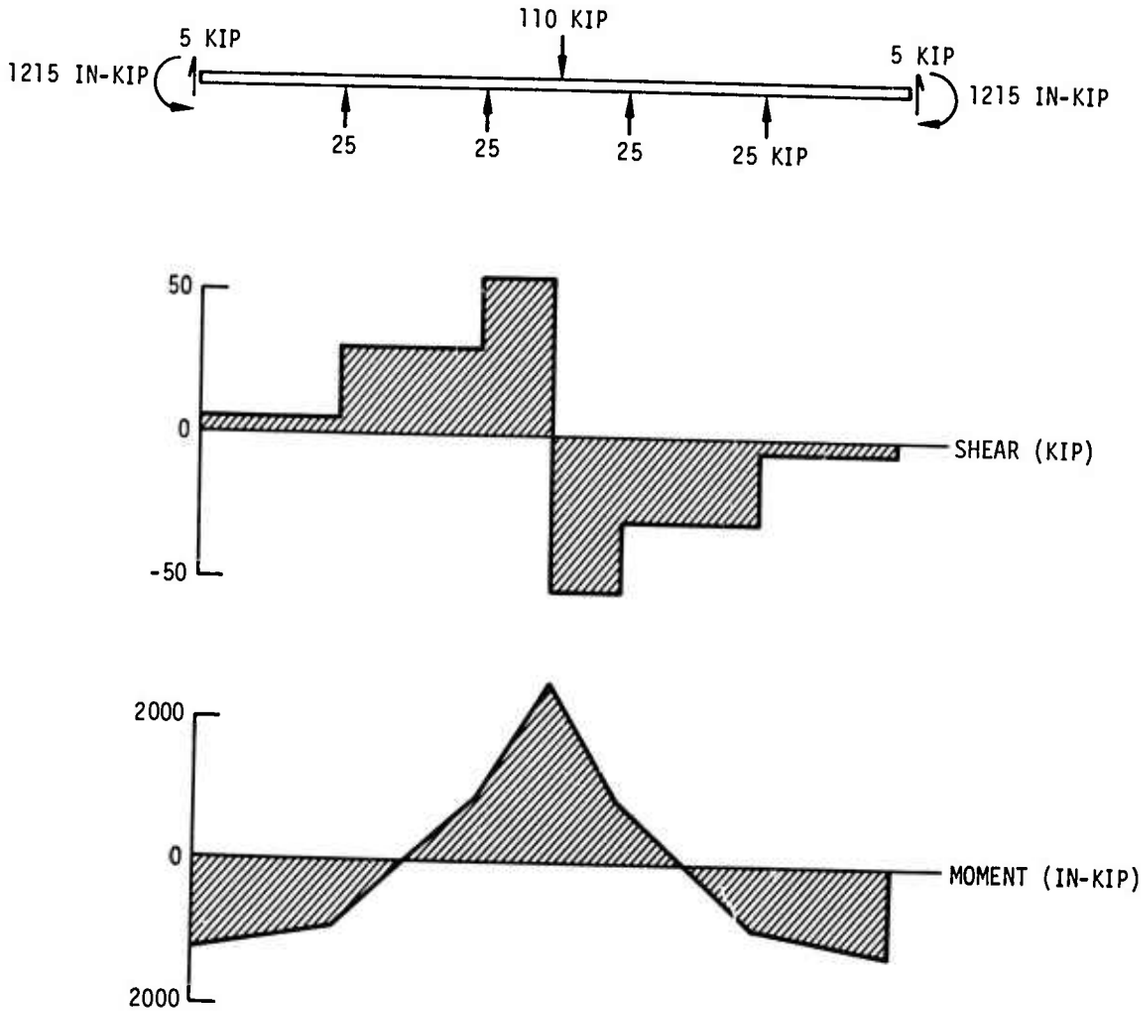

Figure 36a - Four Collapsing Components

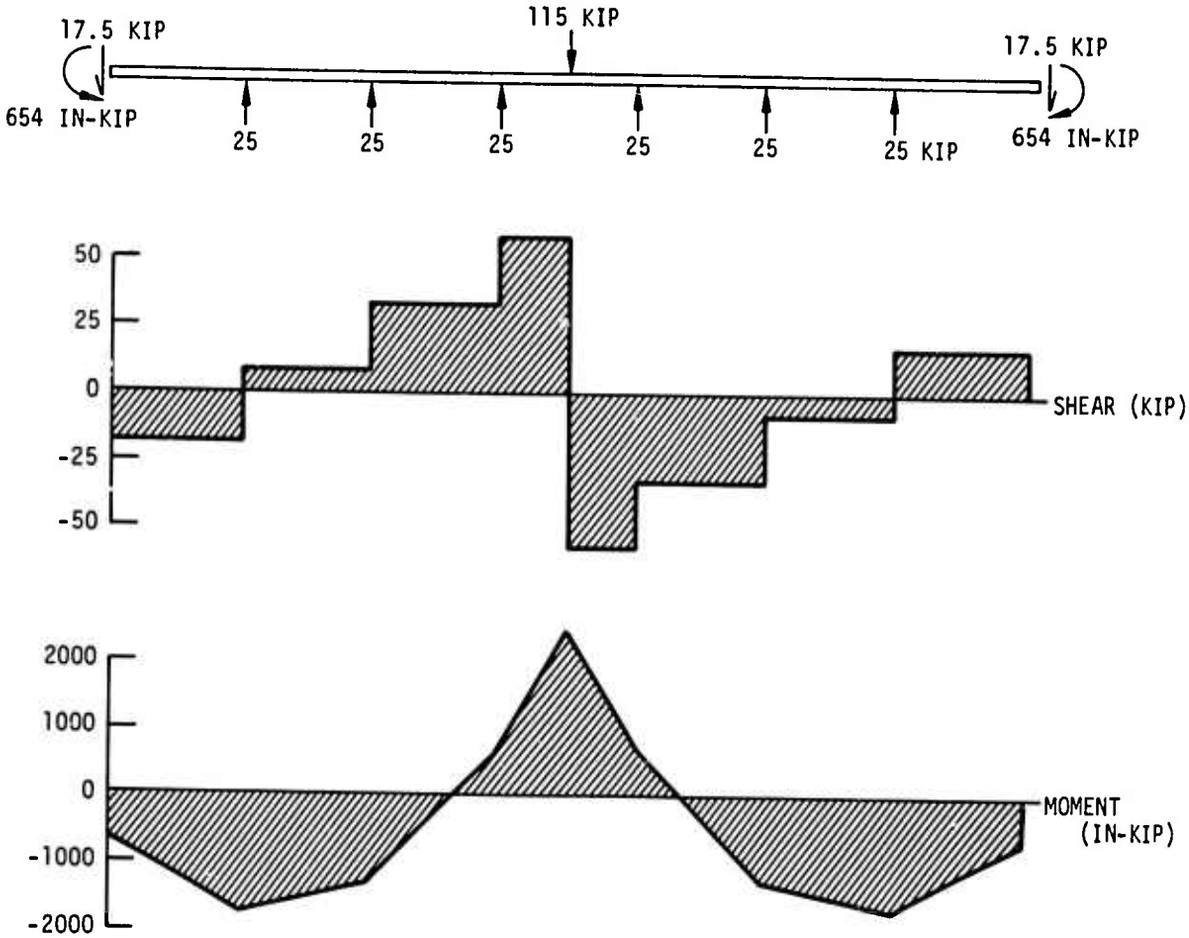

Figure 36b - Six Collapsing Components

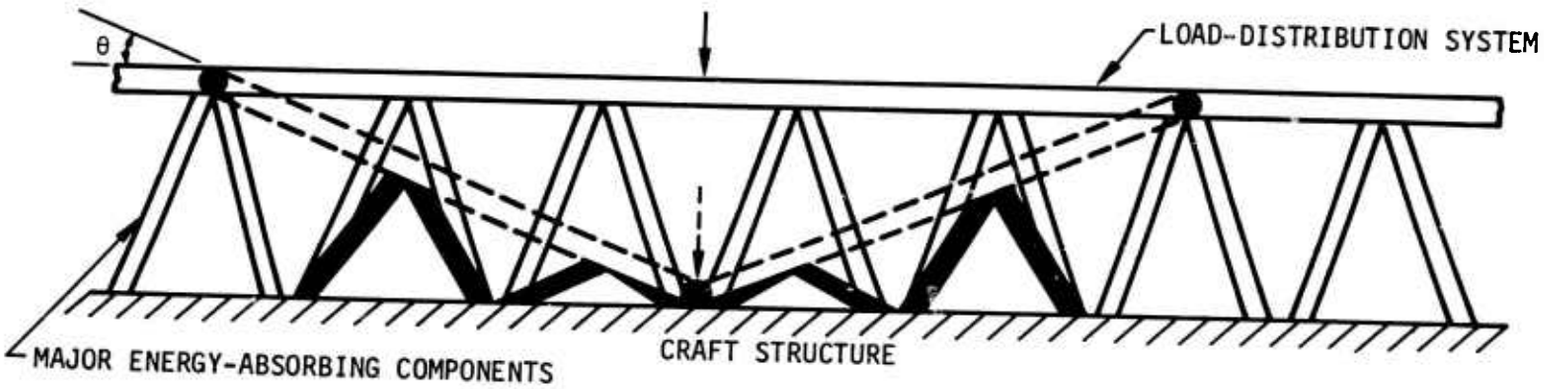

Figure 37 - Collapse of Load-Distribution System under a Point Load between Two Components

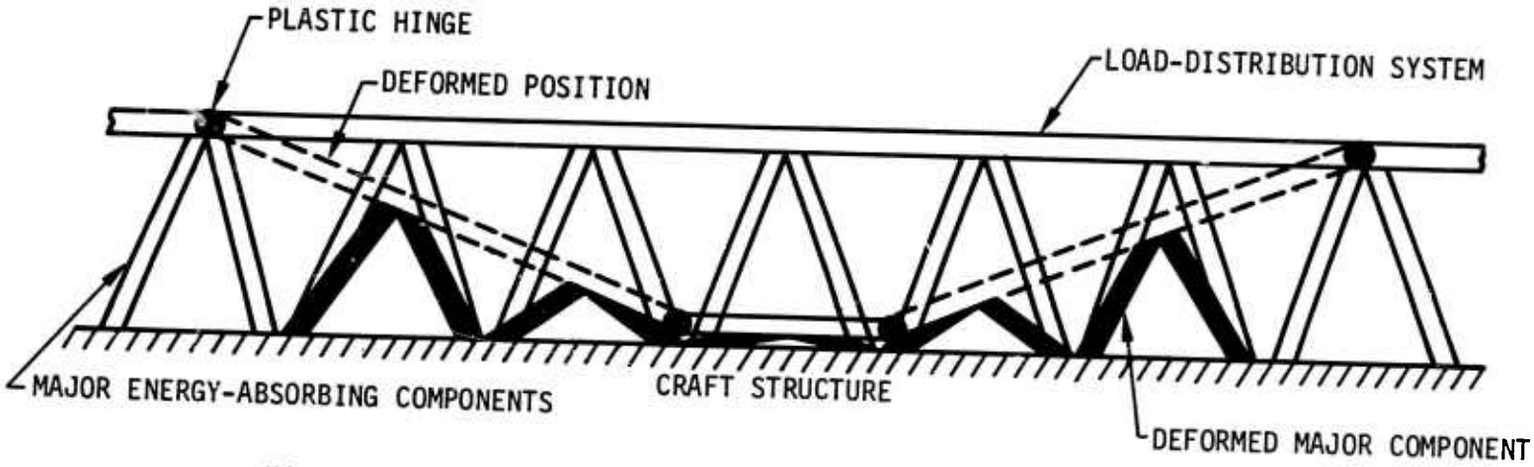

Figure 38 - Collapse of Load-Distribution System under a Finite Width Obstacle

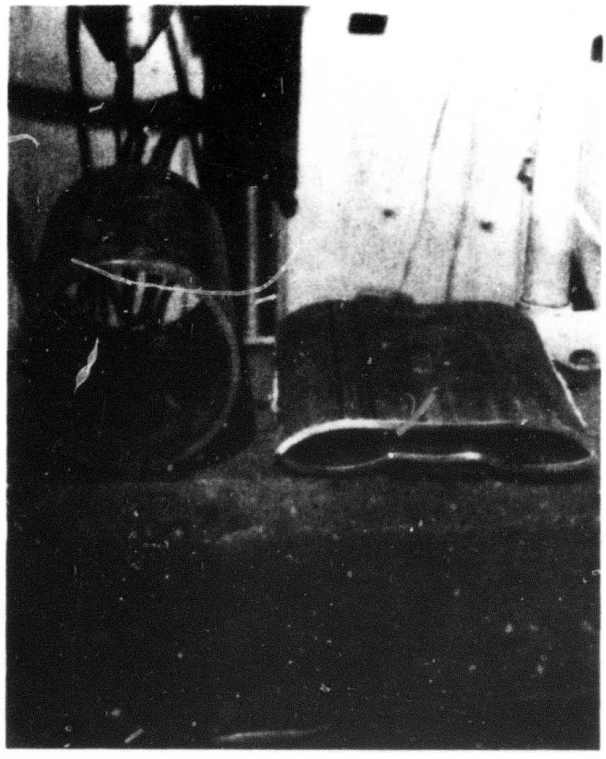

Figure 39 - Typical Bumper-Tube Collapse

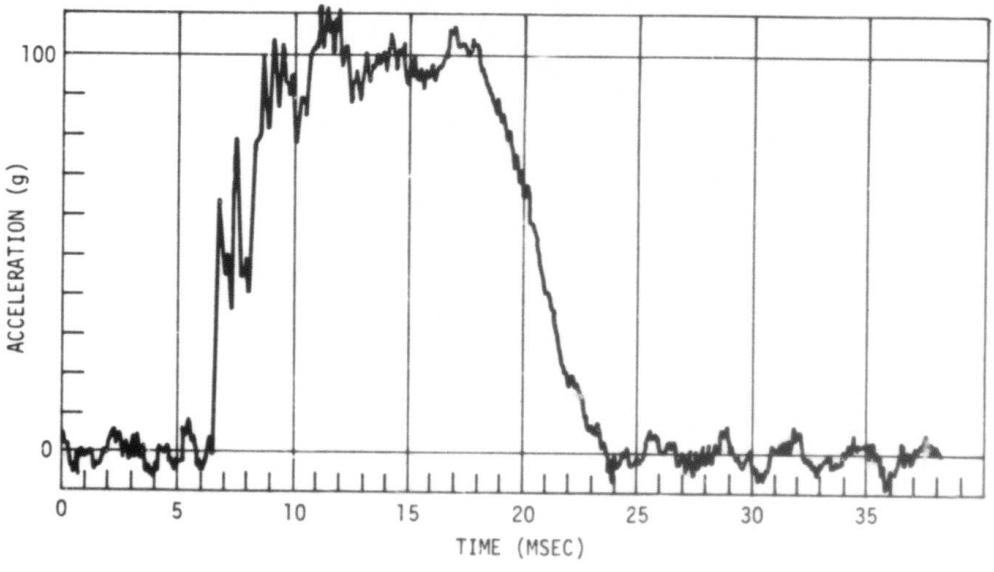

Figure 40 - Experimental Data for Bumper Tube

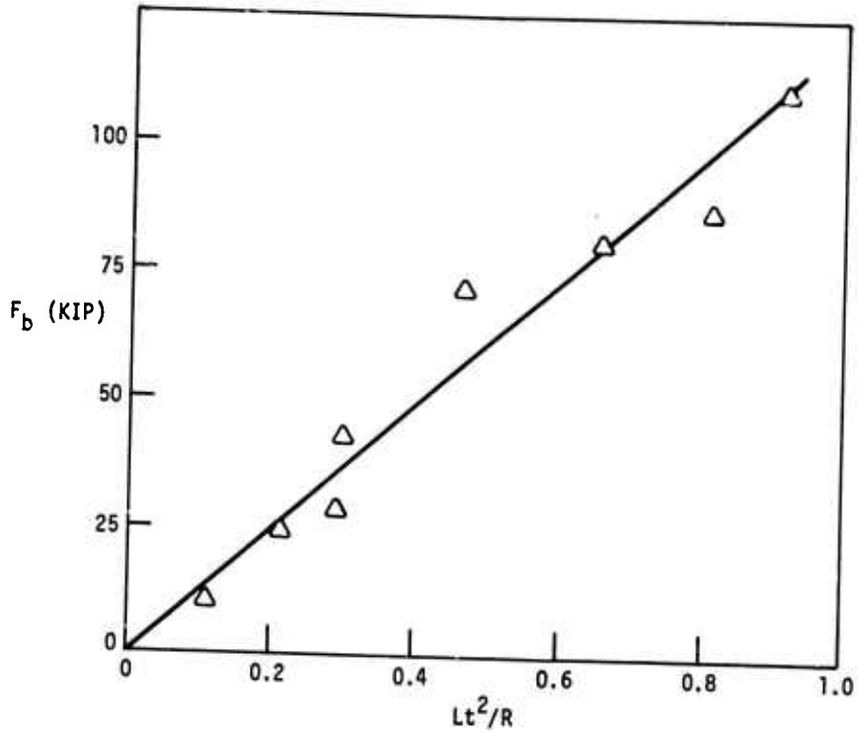

Figure 41 - Relationship of Critical Parameters for the Collapse of Aluminum Bumper Tubes

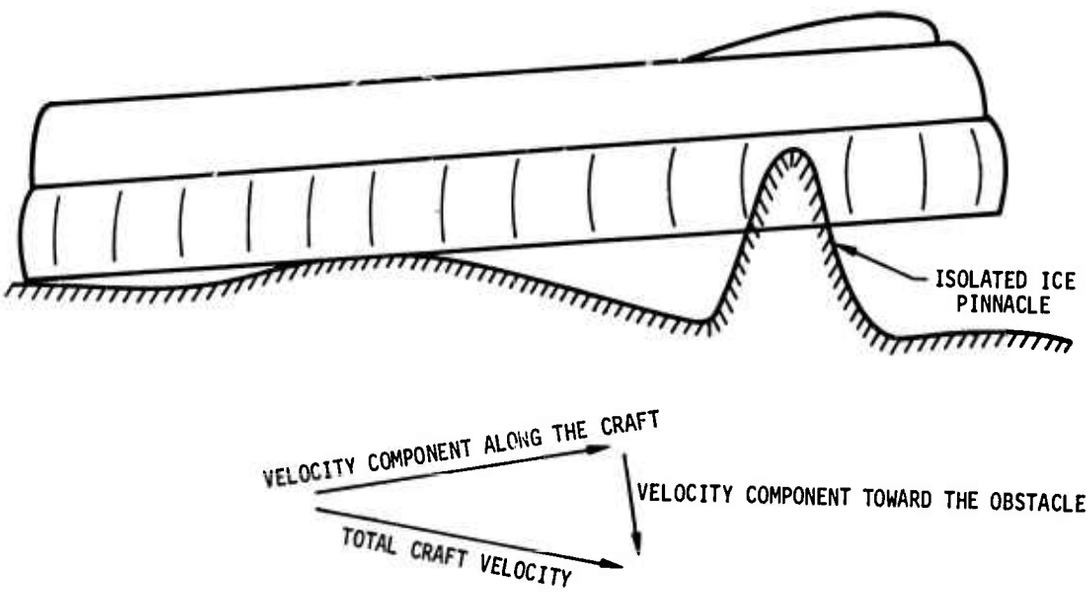

Figure 42 - Definition of Directions along the Craft and Toward the Obstacle

REFERENCES

1. Pounder, E. R., "Physics of Ice," Pergamon Press, New York (1965).

2. Weeks, W. and A. Assur, "Mechanical Properties of Sea Ice," Monograph II-C3, Cold Regions Research and Engineering Laboratory, Hanover, N. H. (Sep 1967).

3. Hirsch, A. E., "Man's Response to Shock Motions," David Taylor Model Basin Report 1797 (Jan 1964).

4. Mahone, R. M., "Man's Response to Ship Shock Motions," David Taylor Model Basin Report 2135 (Jan 1966).

5. Howe, J. T., "Theory of High-Speed-Impact Attenuation by Gas Bags," National Aeronautics and Space Administration, Ames Research Center, NASA-TN-D-1298 (Apr 1962).

6. Esgar, J. B. and W. C. Morgan, "Analytical Study of Soft Landings on Gas-Filled Bags," National Aeronautics and Space Administration, Lewis Research Center, NASA TR R-75 (1960).

7. Stimler, F. J., "Advanced Materials and Techniques for Space Applications," Presented at American Rocket Society 15th Annual Meeting (Dec 1960).

8. Guist, L. R. and D. P. Marble, "Prediction of the Inversion Load of a Circular Tube," National Aeronautics and Space Administration, Ames Research Center, NASA TN D-3622 (Sep 1966).

9. Butt, L. T., "The Use of Torsional Tubes to Approach the Ideal Constant Force Maintenance-Free Restorable Shock Mount," NSRDC Report 2545 (Dec 1969).

10. Vennard, J. K., "Elementary Fluid Mechanics," John Wiley & Sons, Inc., New York (1961).

11. Hoff, N. J., "Dynamic Stability of Structures," Stanford University, Department of Aeronautics and Astronautics, SUDAER 251 (Oct 1965).

12. Holzer, S. M. and R. A. Eubanks, "Stability of Columns to Impulsive Loading," Journal of the Engineering Mechanics Division, American Society of Civil Engineers Proceedings, 6734, EM4 (Aug 1969).

13. Goppa, A., "On the Mechanism of Buckling of a Circular Cylindrical Shell Under Longitudinal Impact," Technical Information Series R60SD494 of the Space Sciences Laboratory, General Electric Company, Missile and Space Vehicle Department (1960).

14. Borg, S. F. and J. J. Gennaro, "Advanced Structural Analysis," D. Van Nostrand Company, Inc., New York (1959).

15. Elmer, G. D., "Design Formulas for Yielding Shock Mounts," David Taylor Model Basin Report 1287 (Jan 1959).

16. Perrone, N., "Impulsively Loaded Strain-Hardened Rate-Sensitive Rings and Tubes," Report 10, National Science Foundation Grant GK782, Catholic University of America, Washington, D. C. (Apr 1969).

17. Hashmall, H., "An Evaluation of Some Elastic-Plastic Shock Mounts," NSRDC Report 2973 (Feb 1969).