AD-757 072

HIGH-ENERGY PULSED LIQUID LASER

H. Samelson, et al

GTE Laboratories, Incorporated

Prepared for:

Office of Naval Research
Advanced Research Projects Agency

28 February 1973

DISTRIBUTED BY:

NTIS

National Technical Information Service
U. S. DEPARTMENT OF COMMERCE
5285 Port Royal Road, Springfield Va. 22151

AD757072

GTE

HIGH-ENERGY PULSED LIQUID LASER

Semiannual Technical Summary Report

U. S. Navy, Office of Naval Research
Washington, D. C.
Contract N00014-68-C-0110

DDC
RECEIVED
MAR 19 1973
C

28 February 1973

TR 73-826.1

Reproduced by
NATIONAL TECHNICAL
INFORMATION SERVICE
U S Department of Commerce
Springfield VA 22151

Sponsored by

Advanced Research Projects Agency
ARPA Order No. 1806

DISTRIBUTION STATEMENT A
Approved for public release;
Distribution Unlimited

GTE LABORATORIES
INCORPORATED
Waltham, Massachusetts 02154

19 R

UNCLASSIFIED

Security Classification

DOCUMENT CONTROL DATA - R & D

(Security classification of title, body of abstract and indexing annotation must be entered when the overall report is classified)

1. ORIGINATING ACTIVITY (Corporate author) GTE Laboratories Incorporated 40 Sylvan Road Waltham, Mass. 02154	2a. REPORT SECURITY CLASSIFICATION Unclassified 2b. GROUP

3. REPORT TITLE

HIGH-ENERGY PULSED LIQUID LASER

4. DESCRIPTIVE NOTES (Type of report and inclusive dates)

Semiannual Technical Summary

5. AUTHOR(S) (First name, middle initial, last name)

H. Samelson
R. Kocher
A. Lempicki

6. REPORT DATE 28 February 1973	7a. TOTAL NO. OF PAGES 19	7b. NO. OF REFS 3
8a. CONTRACT OR GRANT NO. N00014-68-C-0110 b. PROJECT NO. c. d.	9a. ORIGINATOR'S REPORT NUMBER(S) TR 73-826.1 9b. OTHER REPORT NO(S) (Any other numbers that may be assigned this report) ARPA Order No. 1806	

10. DISTRIBUTION STATEMENT

11. SUPPLEMENTARY NOTES	12. SPONSORING MILITARY ACTIVITY U. S. Navy Office of Naval Research Washington, D. C.

13. ABSTRACT

This report covers the construction of a liquid laser designed for operation as an oscillator-amplifier in the high brightness mode. The new aspects of the design of the laser cells, the cooling system and the power supply are presented and discussed. The entire system is nearly ready to be put into operation.

DD FORM 1 NOV 65 1473

I-a

UNCLASSIFIED

Security Classification

UNCLASSIFIED

Security Classification

14 KEY WORDS	LINK A ROLE	LINK A WT	LINK B ROLE	LINK B WT	LINK C ROLE	LINK C WT
Neodymium liquid laser						
High average power laser						

UNCLASSIFIED

Security Classification

TR 73-826.1

HIGH-ENERGY PULSED LIQUID LASER

Contract No. N00014-68-C-0110

ARPA Order Number:	1806	Date of Report:	28 February 1973
Project Code Number:	421	Contract Expiration Date:	31 December 1972
Date of Contract:	1 July 1967	Project Scientist:	A. Lempicki
Amount of Contract:	$544,943,00	Telephone:	617-890-8460

ACKNOWLEDGMENT

This research was supported by the Advanced Research Projects Agency of the Department of Defense and was monitored by the Office of Naval Research under Contract No. N00014-68-C-0110.

DISCLAIMER

The views and conclusions contained in this document are those of the authors and should not be interpreted as necessarily representing the official policies, either expressed or implied, of the Advanced Research Projects Agency or the U. S. Government.

Reproduction in whole or in part is permitted for any purpose of the United States Government.

GTE LABORATORIES INCORPORATED
Waltham, Massachusetts 02154

II

CONTENTS

Section		Page
	Summary	1
1	Introduction	2
2	The Laser Circulatory System	3
3	Cooling System	9
4	Flashlamp Triggering and Power Supply Design	12
5	Preparation of System for Use	13
6	References	13

Preceding page blank

ILLUSTRATIONS

Figure		Page
1	Water Jacketed Laser Cell	4
2	Overall View of Circulatory System	5
3	Detail of Pump, Filter and Heat Exchanger	6
4	The Three Laser Heads	7
5	Liquid Laser Cooling and Control Circuit	10

Preceding page blank

SUMMARY

The objective of this program is a high brightness liquid laser operating at 5 pps and with an output of 5 or more J/p. The current phase of the work has involved the redesign of a number of components of the system (with the program objective in mind) based on knowledge gained from previous work. Those components that have undergone modification are the laser cells, the cooling system and the power supply.

Work during this reporting period was impeded by the transfer of the project from Bayside, New York, to Waltham, Mass. Nevertheless, significant progress was made which is the subject of this report.

The laser cells were redesigned to improve the coupling of the pump radiation and the cooling of the cell wall. Experiment and theory indicate that both aspects were deficient in the earlier design. The design alterations are consistent with both objectives, and very little of either objective was compromised.

The new cooling system is a commercial unit designed for laser applications. This is described in some detail. The use of this unit is expected to increase the reliability and reproducibility of the laser system.

The power supply was modified by the incorporation of new trigger transformers for the series triggering. These are capable of handling the rms power required for triggering and constitute an improved safety feature.

The drying procedures, after resumption, are on schedule, and the system is nearly ready to be put into operation.

1. INTRODUCTION

The objective of this laser program is the achievement of a high brightness laser operating in a repetitive pulse mode (5 pps) with an average output power of 25 or more watts. This is to be achieved with an oscillator-amplifier system and subsidiary objectives are to determine the extent of and how to control flash induced thermal gradients, and to determine small signal and saturated gains across the diameter of the active medium both on and off line center.

In the work done to the present, we have demonstrated the feasibility of a high average power repetitively pulsed liquid laser by achieving a steady state average output power of 380 W at 5 pps. This was almost a factor of two in excess of the objective for this mode of performance. In the course of this work the material capability and the design principles for liquid lasers have been established.

The work during the present reporting period was markedly impaired by the move of our laboratory facilities from Bayside, New York, to Waltham, Mass. Despite our best efforts to maintain a continuity of effort, there was a breakdown which covered a substantial fraction of the present reporting period.

We were, nevertheless, able to achieve certain limited goals:

1) Completion of a new circulatory system.

2) Integration of the circulatory system with a new cooling system and improved power system so that in effect the laser has been redesigned and rebuilt to overcome deficiencies observed in prior work.

3) The laser was transported from Bayside and assembled in Waltham, thus demonstrating a portable quality not previously available.

In this report we will describe those aspects of the system that are new. These include new laser cell designs, the new cooling system and the improved triggering circuit.

2. THE LASER CIRCULATORY SYSTEM

The major innovation in the laser circulatory system is the design of the cell. As is well known, the cell, in a liquid laser, fulfills both a hydrodynamic and optical need. To the present, the main concern has been to understand and satisfy the hydrodynamic requirements. This has been done and, as far as can be determined from the performance data, the nozzle type cell, described in an earlier report,[1] is an excellent solution.

There are two other aspects to the problem of the cell. The first of these is the cell wall which remains the only solid element subject to thermal effects in contact with the laser liquid. This can be expected to behave much as a glass rod or crystal, absorb radiation and rise in temperature. The function of the external water cooling (see Figure 1) is to regulate this temperature and control the thermal gradient induced in the laser liquid. That such an effect exists was demonstrated in prior work. Since this is principally a problem of heat conduction, it is facilitated by a thin cell wall.

The second aspect of the cell problem is the coupling of the pump radiation into the laser liquid. The water jacket and cell wall in effect constitute a sheath for the laser liquid, and the entire system (water jacket, cell and laser liquid) is equivalent to a clad rod. This problem has been dealt with by Devlin et al [2] and Sooy and Stitch,[3] and the equations they derived can be applied to the present case. The details of the solution were presented in the previous Annual Technical Summary Report[1] (August 31, 1972) and, based on these calculations, the three types of cells listed in Table 1 have been constructed and incorporated into the laser system.

The new laser system is built around the three flash heads indicated in Table 1. The details of the construction are shown in Figures 2 through 4. Figure 2 presents an overall view of the circulatory system, and Figure 3 is a detailed view of the pump, filter and heat exchanger part. Figure 4 shows the placement of the three flash heads.

In the all-liquid oscillator-amplifier system, the smallest cell can function as a Q-switched oscillator, the intermediate cell is to be a small signal amplifier and the largest the power amplifier. When a solid state oscillator is used, the three heads function as small signal, intermediate and power amplifiers, respectively.

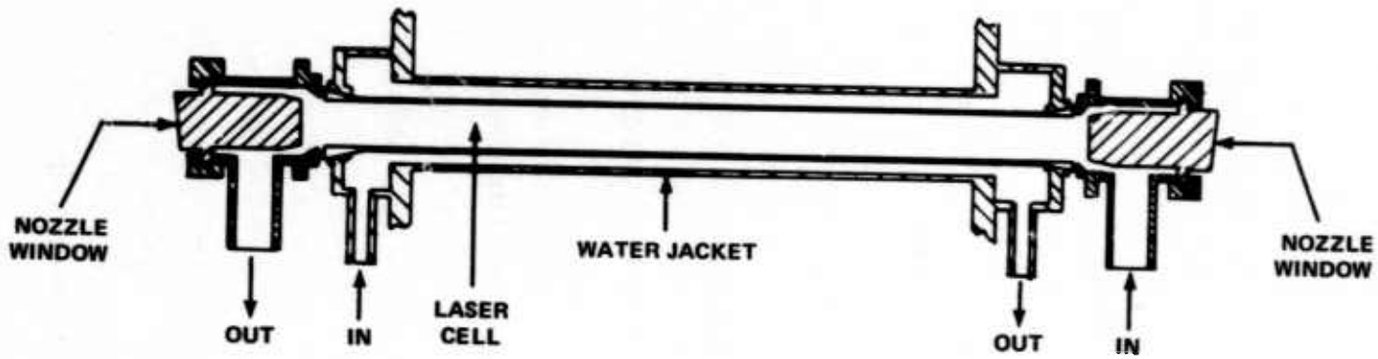

Figure 1. Water Jacketed Laser Cell

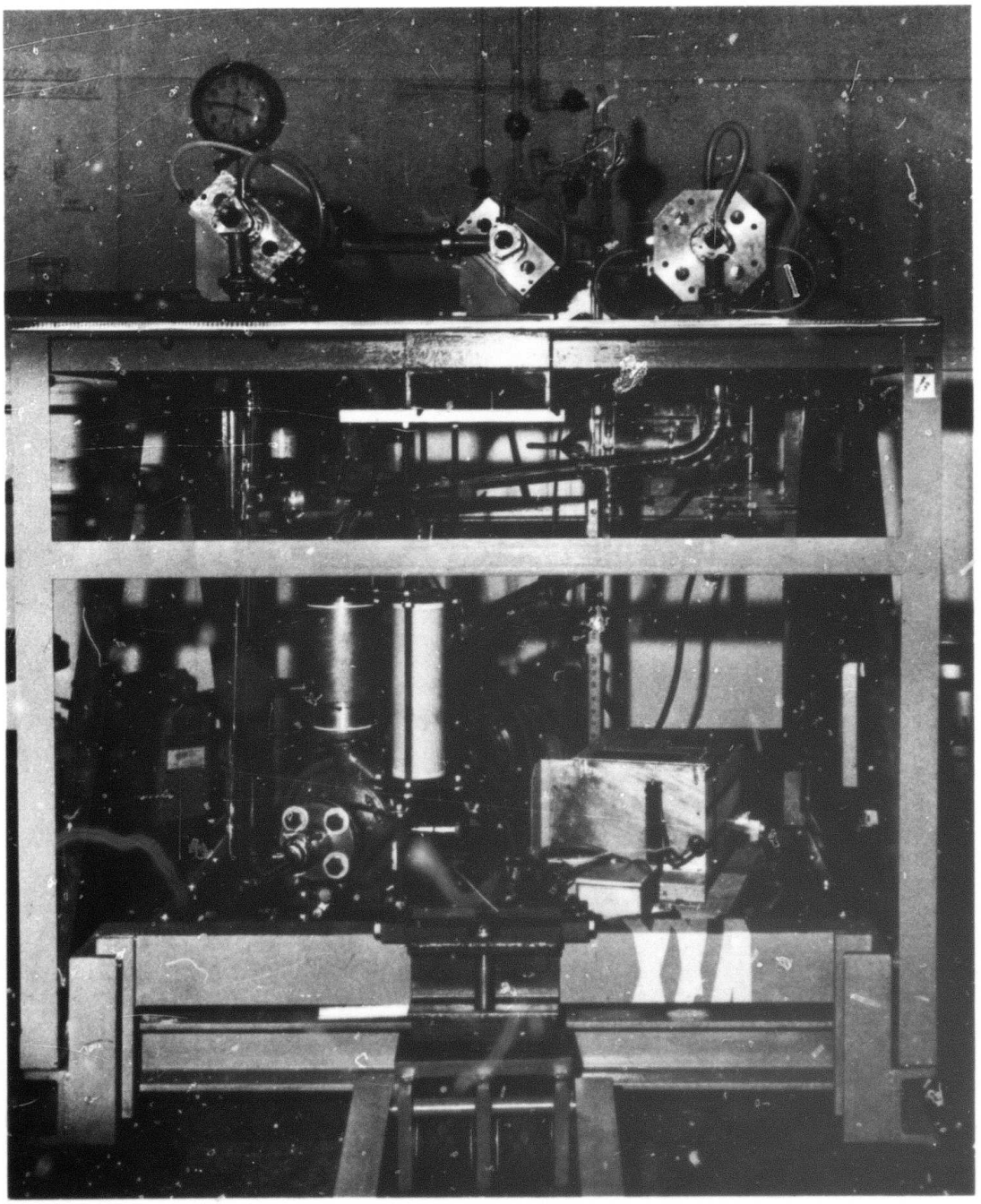

Figure 2. Overall View of Circulatory System

Reproduced from best available copy.

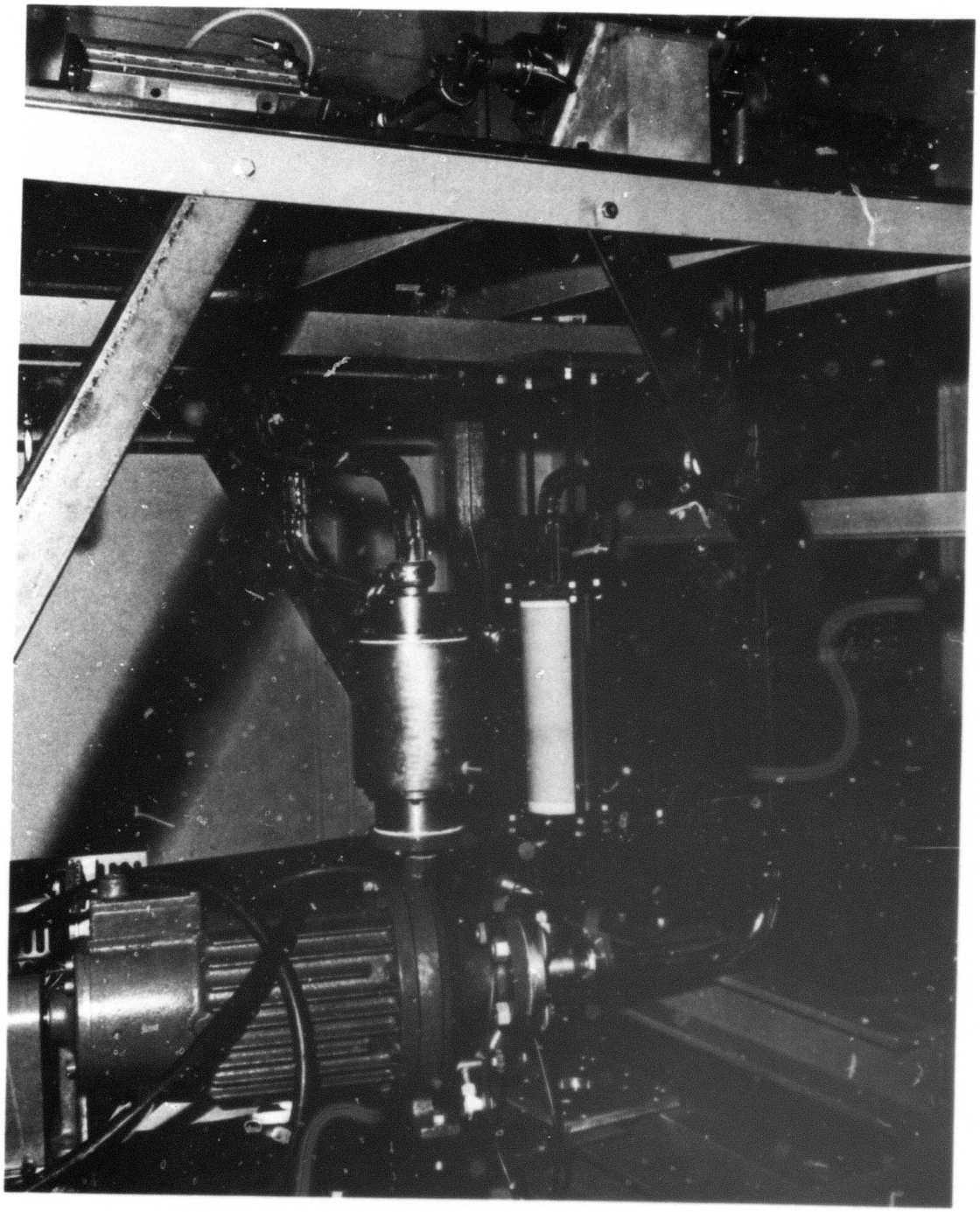

Figure 3. Detail of Pump, Filter and Heat Exchanger

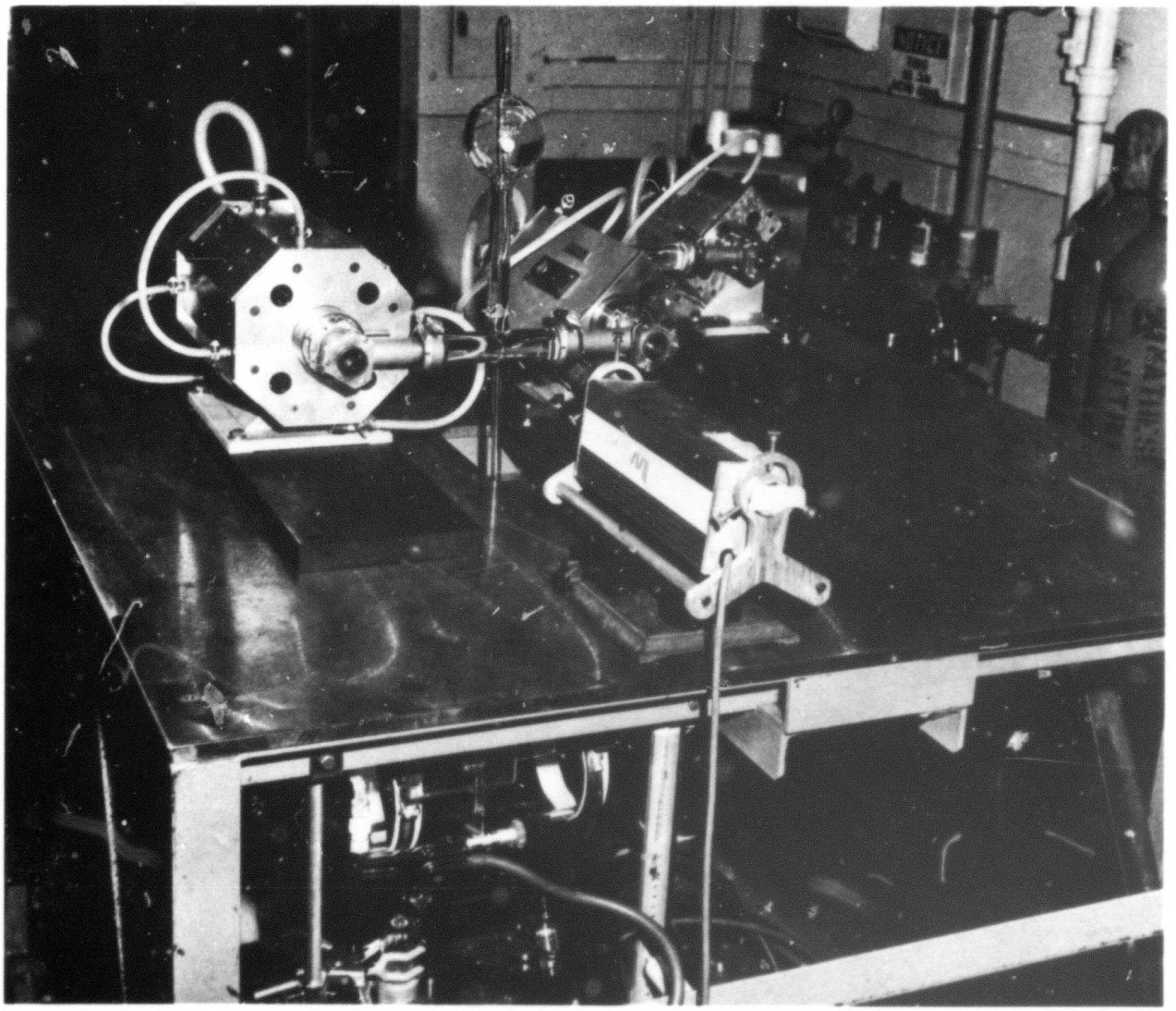

Figure 4. The Three Laser Heads

Reproduced from best available copy.

TABLE 1

CELL AND WATER-JACKET DIMENSIONS

Active Volume Radius (mm)	Cell Wall Thickness (mm)	Outer Radius of Water Jacket (mm)
6.35 (0.25 in.)	0.8	9.5
7.95 (0.313 in.)	1.05	12.0
11.1 (0.438 in.)	1 4	16.6

The construction of the system is along the same lines as the previous model in terms of connecting glass pipe and couplers are concerned. The present table, however, is on wheels and can be moved, as in fact it was during the transfer from one laboratory to another. This transfer was made with the system partially filled with $POCl_3$, and no leakage occurred.

3. COOLING SYSTEM

The laser cooling system must be capable of dissipating the entire 30 kW output of the power supply. More importantly, the system must provide this capability while maintaining coolant temperatures within rather closely defined limits dictated by the heat load. For optical homogeneity throughout the active media in the laser cell, two separate temperatures must be maintained, the temperature of the recirculating laser liquid and the temperature of the confining cell wall. For optimum laser performance, these two temperatures should ideally be equal. In practice, the turbulent flow of the laser liquid through the bore of the laser cell requires a very thin sheath of practically stagnant liquid near the circumference of the cell wall-liquid boundary. This static layer can, in theory, be arbitrarily reduced in thickness by increasing the flow of the bulk liquid, but by the laws of hydrodynamics it can never be eliminated. This stagnant layer, and the cell wall itself, absorb pump radiation from the flashlamps and consequently become hot. To achieve a proper heat flow balance and temperature profile across the rest of the liquid cross section, the exterior of the laser cell wall must be maintained at a lower temperature than the laser liquid bulk. The required temperature differential will increase with increasing average input power but will decrease as the cell wall is made thinner and the flow rate of the laser liquid is increased.

The cooling scheme, therefore, used in the liquid laser makes use of a water-to-liquid heat exchanger for controlling the laser liquid temperature and a water jacket surrounding the laser cell to control the cell wall temperature. Figure 5 shows the plumbing and control circuitry for this equipment. The laser cell coolant is deionized water which is also used to cool the flashlamps in a closed cycle system. Cooling for both the laser liquid and deionized water loops is via heat exchangers with city water. Platinum resistance sensors and two independent time-proportioning controllers actuate solenoid valves on the city water lines to the heat exchangers. Tracking accuracy of the two identical controllers is ±0.1°C. The deionized water loop includes in-line filters and deionizers and uses PVC plumbing throughout. The loop also contains over- and under-pressure switches, as well as a resistivity monitor, which have been interlocked to the Systomation M-60 power supply to shut it off should coolant malfunction occur. Since the major part of the input power will be dissipated by the flashlamps, the deionized water loop has been designed to dissipate the entire 30 kW output capability of the Systomation power supply.

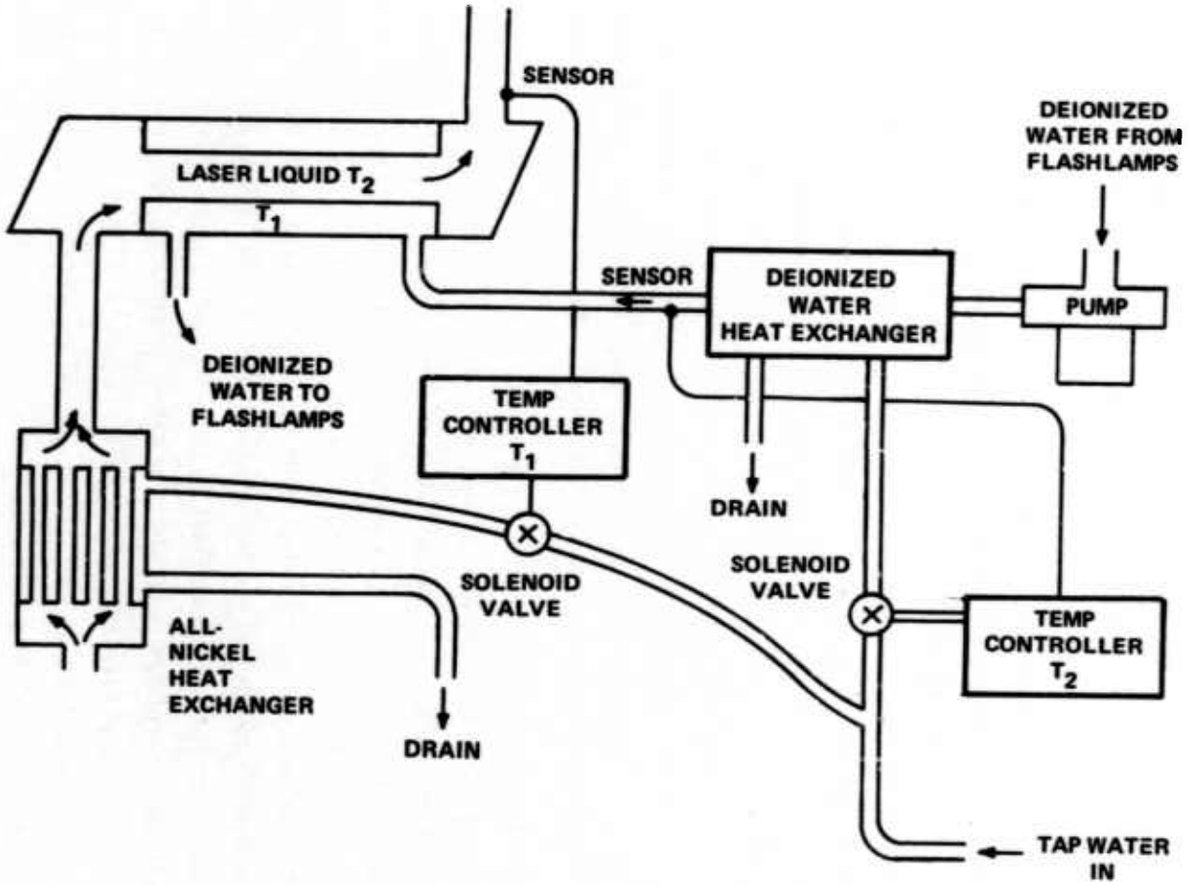

Figure 5. Liquid Laser Cooling and Control Circuit

The entire cooling system has been assembled and the system is ready for final "tuning" of the controller response speeds to match the heat load characteristics of the flashlamps.

4. FLASHLAMP TRIGGERING AND POWER SUPPLY DESIGN

The flashlamp power supply system to be used with this laser consists of the Systomation M-60 power supply used previously, a series of energy storage banks (PFN's) and a brand new series-injection flashlamp triggering circuit. Because of the fact that each of the three laser heads uses a different number or type of flashlamps, a different PFN is necessary for each head. These have been designed to comprise various combinations of 100 μF 5 kV energy storage capacitors with chokes to match the characteristic burning impedance of the flashlamp loads. For safety and convenience, series injection triggering will be used on all the laser heads. Although this method of flashlamp triggering is more expensive and complex, the advantages in flexibility and reliability over external (capacitive coupling) triggering are more important for this application. Special series injection trigger transformers with a rating of 150 amperes rms were purchased. These units have been designed to work up to 30 pps using SCR switching on the primary. To allow repetition rates at this order of magnitude, a new high voltage supply was constructed to interface with the Systomation equipment. The entire triggering circuit has been installed and tested and works satisfactorily.

The interfacing of the Systomation M-60 power supply with both the triggering and cooling circuits was not without problems and wiring errors caused a partial logic failure in the M-60 machine. These problems have been resolved and the entire system now stands ready for operation.

5. PREPARATION OF SYSTEM FOR USE

The necessary steps in preparing the laser system for operation are nearly completed. This mainly involves the dessication of the circulatory system. The procedure was started prior to the move from Bayside to Waltham and was resumed as soon as the laser was installed in the place of operation. The drying will be completed in the next few weeks, and then the filling with laser solution and experimental work will commence.

6. REFERENCES

1. Annual Technical Summary Report N00014-58C-0110 (31 August 1972).
2. G. E. Devlin, J. McKenna, A. D. May and A. L. Schawlow, Applied Optics 1, 11 (1962).
3. W. R. Sooy and M. L. Stitch, J. Applied Physics 34, 1719 (1963).