AD-757 006

CABLE STRUMMING: SOME ENERGY ESTIMATES FOR A MOORED MINE SYSTEM

George E. Hudson

Naval Ordnance Laboratory
White Oak, Maryland

8 January 1973

DISTRIBUTED BY:

NTIS
National Technical Information Service
U. S. DEPARTMENT OF COMMERCE
5285 Port Royal Road, Springfield Va. 22151

BEST
AVAILABLE COPY

AD757006

NOLTR 72-77

CABLE STRUMMING: SOME ENERGY ESTIMATES FOR A MOORED MINE SYSTEM

By
George E. Hudson

8 JANUARY 1973

DDC
RECEIVED
MAR 14 1973
C

NOL

NAVAL ORDNANCE LABORATORY, WHITE OAK, SILVER SPRING, MARYLAND

Reproduced by
NATIONAL TECHNICAL
INFORMATION SERVICE
U S Department of Commerce
Springfield VA 22151

APPROVED FOR PUBLIC RELEASE;
DISTRIBUTION UNLIMITED

NOLTR 72-77

UNCLASSIFIED

Security Classification

DOCUMENT CONTROL DATA - R & D

(Security classification of title, body of abstract and indexing annotation must be entered when the overall report is classified)

1. ORIGINATING ACTIVITY *(Corporate author)* Naval Ordnance Laboratory Silver Spring, Maryland 20910	2a. REPORT SECURITY CLASSIFICATION UNCLASSIFIED 2b. GROUP

3. REPORT TITLE

CABLE STRUMMING: SOME ENERGY ESTIMATES FOR A MOORED MINE SYSTEM

4. DESCRIPTIVE NOTES *(Type of report and inclusive dates)*

5. AUTHOR(S) *(First name, middle initial, last name)*

Dr. George E. Hudson

6. REPORT DATE 8 Jan 1973	7a. TOTAL NO. OF PAGES ~~iv, 69~~ 75	7b. NO. OF REFS 35
8a. CONTRACT OR GRANT NO. b. PROJECT NO. c. d.	9a. ORIGINATOR'S REPORT NUMBER(S) NOLTR 72-77 9b. OTHER REPORT NO(S) *(Any other numbers that may be assigned this report)*	

10. DISTRIBUTION STATEMENT

APPROVED FOR PUBLIC RELEASE: DISTRIBUTION UNLIMITED.

11. SUPPLEMENTARY NOTES	12. SPONSORING MILITARY ACTIVITY Naval Ordnance Laboratory

13. ABSTRACT

This report reviews generally much of the work which has been done at NOL and elsewhere on the phenomenon known as "Cable Strumming". However, its primary purpose is to examine and estimate for a particular type of system - a one-point moored mine - the orders of magnitude of various energy transformations accompanying (a) the vortex shedding phenomenon responsible for strumming (b) the various concomitant wave motions on the cable and (c) other dissipative mechanisms effective in degrading the kinetic energy available in the incident fluid stream. Effects due to gross flutter motion are suppressed using suitable constraints; numerical values for a typical case indicate that a significant portion of the available energy may produce cable noise by strumming, but most either appears in gross flutter if it is not suppressed, or in modifying the vortex shedding itself. An elementary but quantitative physical explanation and derivation of the Strouhal relation is given for the predominant type of vortex shedding process. It indicates that further basic research on the phenomenon is needed.

A treatment of acoustic wave filtration on the cable is included and shows how noise reduction may result from a proper choice of cable attachment mechanisms. Further experimental and theoretical work is indicated.

DD FORM 1 NOV 65 1473 (PAGE 1)

S/N 0101-807-6801

UNCLASSIFIED

Security Classification

UNCLASSIFIED

Security Classification

14. KEY WORDS	LINK A ROLE	LINK A WT	LINK B ROLE	LINK B WT	LINK C ROLE	LINK C WT
Cable Strumming						
Vortex Generation						
Strumming Noise						
Strouhal's Relation						
One-Point Moored Mines						
Mine Cable Vibrations						

DD FORM 1 NOV 65 1473 (BACK)

(PAGE 2)

UNCLASSIFIED

Security Classification

NOLTR 72-77 8 January 1973

CABLE STRUMMING: SOME ENERGY ESTIMATES FOR A MOORED MINE SYSTEM

The research reported herein was performed at the Naval Ordnance Laboratory. This work was chiefly supported by 020, Task Order No. 602-4802.

This document is for information only. It deals with phenomena grouped under the term 'Cable Strumming' for a single-point moored-mine system. The author acknowledges the background information furnished him by many members of the Naval Ordnance Laboratory staff and the stimulating discussions with them in relation to his investigations.

ROBERT WILLIAMSON II
Captain, USN
Commander

D. F. Bleil

D. F. BLEIL
By direction

CONTENTS

Chapter		Page
1	INTRODUCTION AND PURPOSE	1
2	SPECIFICATION OF THE SYSTEM, SOME NOTATIONS, AND THE BASIC PHENOMENA OF INTEREST	4
3	OUTLINE OF ENERGY TRANSFORMATIONS	12
4	ORDER-OF-MAGNITUDE ESTIMATES OF SOME WORK-ENERGY TRANSFORMATION RATES	18
5	CONCLUSIONS AND NEEDED RESEARCH: ANALYSES AND EXPERIMENTS	34
	APPENDIX I	45
	APPENDIX II	52
	REFERENCES	67

ILLUSTRATIONS

Figure	Title	Page
2.1	A General Displacement of Cable and Case	5
2.2	A Constrained Equilibrium Configuration	6
2.3	The Strouhal Relationship	9
3.1	Energy: Flux & Transformations Through: Water, Case & Cable	13
4.1a	In Steady Laminar Flow, the Aft Stagnation Point is Directly Opposite the Forward One and in Line with the Flow Velocity U	24
4.1b	In Unsteady Laminar Flow the Aft Stagnation Point Moves Around the Cable X-Section as a Vortex is Formed and Peels off	24

ILLUSTRATIONS (CONT)

Figure	Title	Page
4.2	Some Important Steps in the Partition and 'Degradation' of Energy from the Flow Field	32
5.1	Kinematics of Vortex Shedding	36
5.2	Acoustic Wave Transmission and Filtration for a Mine Case and Mooring Cable System	39
5.3	Behaviour of Reflection Coefficient	44
AII.1	A Possible Method of Vortex Detachment from the Case, and its Subsequent Form	53
AII.2	Forces on the Case	55
AII.3	A Solution of the Case-Tilt-and Drag, Cable-Tension Equilibrium Equations	58
AII.4	Forces and Moments on a Cable Element	59
AII.5	Case Forces and Flow Speed Versus Tilt	64
AII.6	Cable Tension at Anchor Versus Flow Speed U_1	65
AII.7	Cable Tilt at Anchor Versus Flow Speed U_1	66

TABLE

Table	Title	Page
4.1	Data	20
IA-1	Symbol Listing	46

CHAPTER 1

INTRODUCTION AND PURPOSE

Observations (references 2, 3, 4, 7, 16, 29, 30) show that vortices are often shed periodically into the water flowing past a submerged cable and produce time-varying reaction forces on the cable. If the cable is movable, perhaps being flexible, it will be forced into vibration, and this motion in turn may modify the shedding phenomenon. The cable vibrations might also be coupled in various ways to acoustically sensitive parts of a system associated with the cable.

The first purpose of this report is to discuss and trace the energy transformations which occur in the water and cable, and thereby make order-of-magnitude estimates of the relative importance of the various mechanisms operating. Since the specific system considered is one in which the cable is anchored at its lower end and put into tension by a movable buoyant submerged case attached to the upper end, there are two main types of motion to be considered: gross oscillatory motion of the case and cable at low* frequencies and higher frequency vibratory motion of the cable. The first we shall call "gross flutter," and the second "cable strumming." These main modes can interact - chiefly by the gross motions' producing a fluctuating - relatively slow modulation of the higher frequency vibrations, and by the higher frequency transverse vibrations producing a significant alteration of the gross drag on the cable. In this report, as far as possible, we restrict ourselves to consideration of "cable strumming" only.

Both types of motion generally are forced oscillations produced by periodic forces of similar hydrodynamic origin but different in frequency, amplitude, and region of application. When resonances occur, the two types can be distinguished by their restoring-force mechanisms - gravity for the gross case and cable motion, and cable tension for the cable strumming phenomenon. Otherwise, the distinction can be made by reference to the main regions of application of the hydrodynamic forces - the case surface for gross flutter, the cable surface for strumming.

*In this report, less than five Hertz.

The physical phenomenon of fundamental importance in producing these forced motions is the generation of systems of vortices in the water surrounding the cable and case. Vortex generation is still a subject for basic research, since the specific laws describing the reaction forces on the obstacle inducing a vortex are not known or understood in many important details, nor are the actual flow fields computed for all relevant situations. A quantitative relation, first proposed by Strouhal, between certain kinematic variables: shedding frequency f, flow speed U, transverse dimension of obstacle d, and the Reynold's number of the flow when a 'Karman vortex street' is produced, has been known for nearly a hundred years (references 12, 14a, 20b, 27) - but despite several studies, a complete derivation from first physical principles does not seem to exist (references 20b, 21, 25)*. One of the difficulties in understanding lies in the fact that the vortices are produced under flow boundary conditions which are spatially symmetric and constant in time, yet the vortex flow around the obstacle has a different symmetry and is periodic in time. Moreover, the vortices appear 'automatically' even without unsteady motion of the obstacle through the fluid. Thus "Strouhal flow" results from an instability in uniform constant flow. A second difficulty arises when unsteady, sometimes periodic motion of the obstacle occurs - this motion interacts with the forcing flow field and modifies it - a nonlinear phenomenon. Our energy estimation procedures applied to this phenomenon lead us to make a conjecture concerning the relation of the amplitude of such periodic cable motion to the vortex generation mechanism. A second purpose of the report is to sketch in the final section a new plausibility argument for the Strouhal relation itself for steady uniform flow and thereby propose for a later report an extension and detailed examination of the theoretical study of the model on which the argument is based. The developments of the model and logical context were stimulated by discussions between the writer and Dr. D. Sallet.

Because the transverse high frequency vibrations of the cable ('cable strumming') produce concomitant longitudinal cable vibrations or wave motion, noise of double** the Strouhal frequency can be communicated to acceleration sensitive acoustic pickup elements attached within the buoyant case (references 2, 5, 6, 16, 30). Both transverse and longitudinal motions can be analyzed in terms of traveling waves

*There are many excellent semi-empirical numerical and mathematical studies of vortex motion and separation phenomena. Some are listed under references 29, 31 and in references contained therein.
**As in MELDE's experiment, reference 20a. An additional mechanism not discussed herein, has just been uncovered by recent theoretical work, and will be reported later. It is due to coupling of transverse modes of vibration.

along the cable which carry the noise energy to the mine case. Acoustic isolation of such elements is thereby indicated to eliminate this noise. This might be accomplished by introducing a lossy rope connection between the cable and case, and this indeed has been found to be a practicable solution to an annoying problem in some applications (reference 2). Consequently, in a later report, it is proposed to discuss more detailed analyses and data relating to the acoustic filtering properties of such a lossy connector. In the last section of the present report, however, to satisfy a third aim, we present an indication of the kind of results to be expected from an analysis of filtering processes in the system.

Another effective method for reducing the strumming noise or the gross oscillations is by disruption of the characteristic vortex flow field, but methods for accomplishing this will not be discussed here (reference 26).

In summary, the general aim of the report is that it serve as an introductory review and help give direction to further discussions of some of the physical mechanisms operating in a moored mine system-all related to cable strumming. The result is that we are led to point out some areas in which further research investigations are needed - both experimental and theoretical.

CHAPTER 2

SPECIFICATION OF THE SYSTEM, SOME NOTATIONS, AND THE BASIC PHENOMENA OF INTEREST

Figure 2.1 shows a configuration able to be assumed momentarily by the case and cable in a flow field of speed U. In practice, the flow velocity may not be constant either in magnitude or direction and will vary with depth. The cable, of equilibrium length L, and radius R_1, will in general be curved; and the case may be moving in translation and vibration, so that its axis is generally not along the cable direction at the point of attachment 'C' The other end of the cable, of course, is anchored at the origin 'A'. We assume the case to be a smooth circular cylinder of length L_2 and radius R_2.

Now the study of the gross cable and case motion or "gross flutter" is not the subject of this report; it is being and has been treated elsewhere (references 1, 10, 13, 17, 23, 24, 28). We consider here only certain overall equilibrium characteristics of the gross configuration described in terms of a constrained model of the cable-case displacements and shall neglect entirely any sideways, low-frequency flutter motion of the case and cable and concomitant transient gross oscillation of the case around its center of mass. This is not unrealistic, since some methods and devices now under consideration may effectively damp out or eliminate these gross motions. That is, except for high frequency strumming motion, the case and cable will be assumed to have nearly taken on an "equilibrium" configuration as in Figure 2.2 in which the cable is curved but lies in a vertical plane except for acoustic vibrations; and the case is similarly motionless with its axis in the plane of the cable and the vertical; this plane also contains the constant flow vector. Appendix II contains details of the derivation of an equilibrium configuration summarized and discussed at the end of this section.

These simplifications allow us to concentrate attention on the <u>cable strumming</u> phenomenon, of main interest in this report. Energetically speaking, strumming will be seen to be capable of extracting a significant fraction of the available energy in the ambient flow field and, thus, may be of the same order of magnitude in energy as the more obvious gross flutter phenomenon. We shall usually use a subscript, '2' to denote "case" quantities, and '0' or '1' to denote "cable" quantities, so that, for example, the area

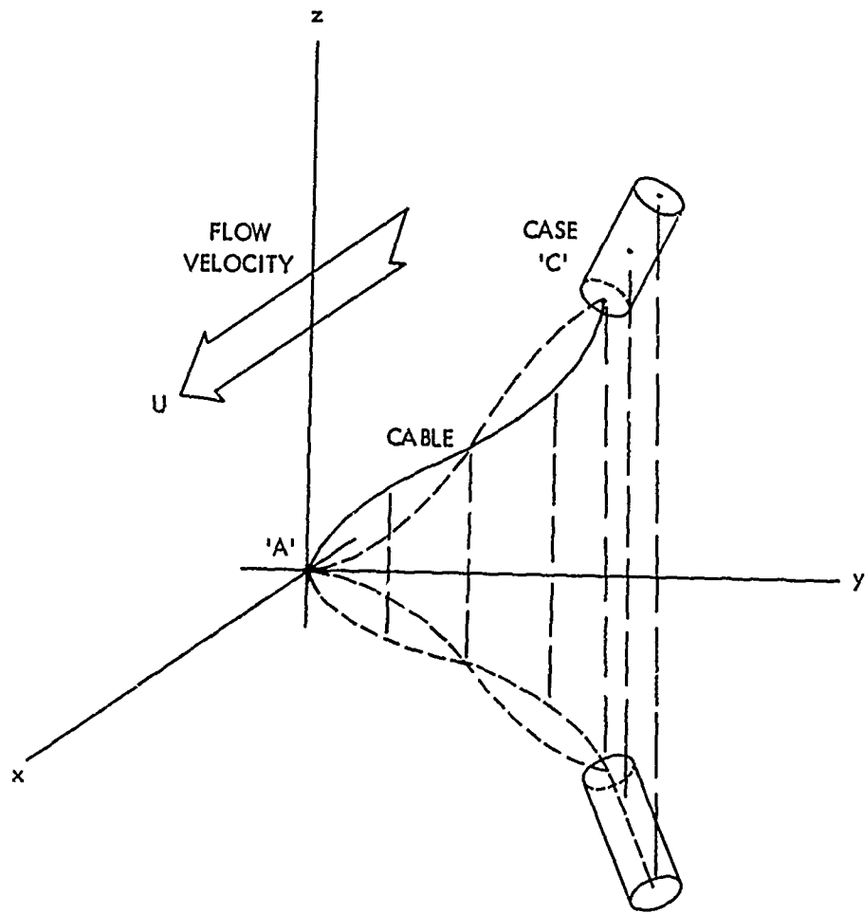

FIG. 2.1 A GENERAL DISPLACEMENT OF CABLE AND CASE

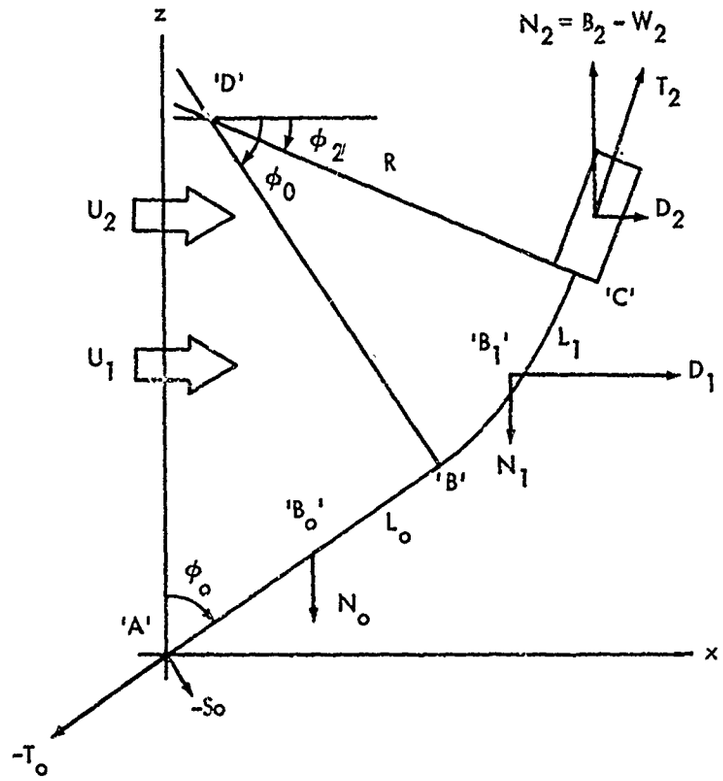

FIG. 2.2 A CONSTRAINED EQUILIBRIUM CONFIGURATION

presented by the cylindrical case normal to its axis -- its side aspect area -- is

$$\bar{a}_2 = 2R_2L_2 \tag{2.1}$$

while the cross-section or base area of the case is

$$a_2 = \pi(R_2)^2 .$$

The net buoyancy of the case is the displacement buoyancy B_2 decreased by the weight of the case, W_2. Similarly for the net weight of the cable. Rates of working by forces will be denoted by dotted W's: $\dot{W}$, rates of heat addition by $\dot{Q}$, and rates of kinetic energy change by $\dot{K}$.

A transverse displacement of the cable from equilibrium is called y, with a maximum value y_o; the frequency of transverse vibration, almost equal to the unperturbed Strouhal vortex shedding frequency will be denoted by f; Kinematic viscosity of the water is denoted by $\nu = \mu/m_o$ where m_o is the water density and μ is its viscosity. The letter c will denote the phase speed of waves with appropriate subscripts differentiating the medium or the mode. That is, c_T denotes the speed of transverse waves along the cable, for example. A complete listing of notation is given in Appendix I.

The quantitative distinction between strumming and flutter can be made more explicit as follows. Water streaming past the cable with speed U_1 normal to it results in the shedding of a sequence of vortices from alternate sides of the cable with a frequency f, where

$$2\,\frac{fR_1}{U_1} = S_t(Re_1) \tag{2.2}$$

and the Reynold's number is

$$Re_1 = 2\cdot\frac{U_1R_1}{\nu} \tag{2.3}$$

The universal function, S_t, has the value zero until the Reynold's number for the flow reaches the value 50. It then increases sharply to a value near 0.2 and remains nearly constant until the Reynold's number has a value about 10^5, beyond which point S_t increases rapidly as a completely turbulent wake is produced at higher Re values. This behavior of the combination

$$S_t = 2\,\frac{fR}{U}$$

called Strouhal's number, has been known for a long time -- and is described by Rayleigh (references 19, 20b). It is also sketched in Figure 2.3.

Now vortices are also generated by the flow past the long cylindrical case, according to the same general law -- but the shedding frequency is much lower, since the case radius R_2 must now be inserted in the Strouhal relationship; and R_2 is much greater than R_1. Moreover, this phenomenon sets in at a much lower stream speed because the Reynold's number for the case is proportional to R_2. There is some possibility that the vortex generated from the case is a continuous helical one, rather than a series of vortices shed from alternate sides of the case. (See Figure AII-1 in Appendix II.)

When a vortex is generated and carried downstream, the associated transient reaction of the water on the generating object contains a component at right angles to the stream and to the axis of the object. This is a time dependent "lift" force; since vortices peel off on alternate sides, the lift force alternately changes its sense of application.

Now one sees that if the cable is flexible, those vortices which are shed from it tend to produce a transverse vibration -- cable "strumming". If the case and cable are also free to move with a gross sideways motion, the vortices shed from the case tend to produce a "gross flutter" vibration at right angles to the stream velocity. Clearly, the fundamental flutter vibration frequency would be much lower than the strumming vibration frequency of our system. As we have emphasized in the foregoing, constraints are assumed to be built into the system which entirely inhibit the build-up of gross flutter vibrations.

These constraints, although not very large, serve to simplify the equilibrium shape of the case and cable. If the ambient flow speed of the water past the cable is very small near the bottom where the anchor is attached to the cable, then the cable is nearly straight over a length L_o in this neighborhood, although it is tilted from the vertical through an angle ϕ_o, as in Figure 2.2. The value of ϕ_o, of course, depends on the flow and drag conditions and on the case buoyancy - so it is found by the procedure described in Appendix II. Over the section of the cable, beginning at point 'B' and extending to the case at 'C', the cable is curved upwards in a circular arc of length L_1 subtending an angle $(\phi_o - \phi_2)$, and having a radius R. For the purpose of this report, this simplified shape is an adequate assumption - one can, of course, treat more complex situations where the flow conditions are more varied - either by an extension of the

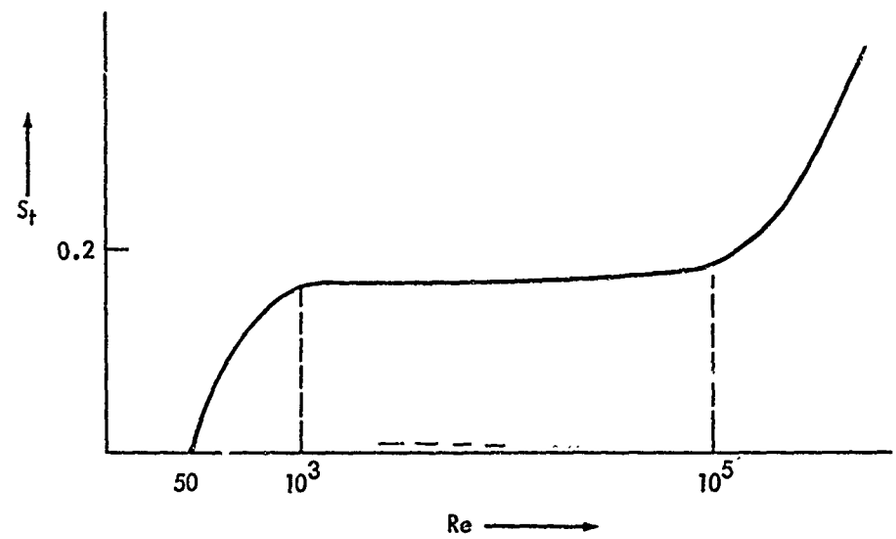

FIG. 2.3 THE STROUHAL RELATIONSHIP

analysis in Appendix II or by some other standard procedures (references 1, 15, for example) applicable to moored mines.

The tilt angle ϕ_2 of the case is equal to that of the upper end of the cable under the case loading and drag conditions assumed. Hence, the angle θ of Figure AII-2 is zero. Angle ϕ_2 may be found once the net buoyancy, N_2, of the case, the average flow speed U_2 past the case and the drag numbers A' and A" are known. If R_2 is the case radius and L_2 is its length, and m_o is the density of water while C' and C" are drag factors for the case side and end areas respectively then:

$$
\begin{aligned}
N_2 &= B_2 - W_2 \\
B_2 &= m_o g \pi (R_2)^2 L_2 \\
W_2 &= \text{Case Weight} \qquad (2.4) \\
A' &= m_o C' R_2 L_2 \\
A'' &= m_o C'' \pi (R_2)^2
\end{aligned}
$$

Typical values of some of these and of many other parameters are given in the Table 4.1 of Chapter 4. Figure AII-3 of Appendix II shows a graphical construction for ϕ_2, the tension T_2 in the cable at the case, and for D_2, the total drag on the case.

On the other hand, the graphs of Appendix II also yield values for the cable tilt ϕ_o (at its lower end), the tension T_o at the anchor given the cable dimensions and parameters and the average speed U_1 of flow past the cable. These are graphs corresponding to the condition $L_o = 0$, so that there are different flows over case and cable but no region of zero speed near the bottom. It is easy to find a similar solution for the case where there is a region of zero flow speed over the lower part of the cable.

These results are samples only useful as a reference for the cable-strumming energy-transformation estimation procedures given in the next sections. Similar calculations of shape response values for other flow and system parameter input values can be made using the Computer Program H 21032* which also yields values of the dip and

*Internal memorandum "A Basic Program for the Calculation of Case and Cable Equilibrium Configuration."

horizontal displacement of the upper end of the cable, its radius of curvature, the shear S_o at the anchor, and the total cable drag force D_1. This concludes our discussion of the moored mine system in equilibrium. This system is to be subjected to cable strumming effects.

We now pose the question, how much of the kinetic energy contained in the stream "incident" on the cable goes into strumming, and how is it subsequently partitioned?

To answer it we first trace qualitatively in the next section various dynamical acoustic and thermal dissipation or energy conversion processes occurring in the system.

CHAPTER 3

OUTLINE OF ENERGY TRANSFORMATIONS

If water streams past a strictly stationary obstacle, impervious to water, the only way for energy to be transferred from it to the obstacle or the reverse is by radiation or heat conduction across the surface layer in contact with the obstacle, or by induction of electric currents. None of these energy transfer methods is of any importance to us in the context of the present report - except that ultimately, of course, all energy dissipated in the case and cable appears as heat conducted away into the water streaming past it. We shall assume that the small temperature differences established in certain processes have a negligible effect on those mechanisms of energy transfer which do mechanical work. That is, work is done and energy thereby transferred only by forces acting on moving parts of our system, as considered in the sequel.

We have already ruled out considerations of the gross flutter motions of the case and cable - although these, of course, influence or modulate the forces responsible for cable strumming. Strumming in turn influences the gross motions and configurations by, for example, modifying the effective cable diameter and thereby the overall drag.* Nevertheless, it seems preferable in this report to separate the two sets of phenomena in the way we have previously specified and suppress consideration of the possible flow of energy from cable vibrations into gross cable or case motions resulting from modification of the overall flow streams. Nor shall we consider the converse possibility.

With this limited objective what remains to be considered? In the work-energy flow diagram of Figure 3.1, the processes and estimates of magnitude labelled (B), (C), (D), (E), (F), (G), (H), (I), (L) and (M) are the relevant items for us. Each one will be discussed

*It has been necessary to estimate the drag increase effect and use it in the previous sections in order to obtain a more realistic estimate of the cable and case equilibrium shape. It was done by using appropriate values for C' and C". See references 1, 4, 10, 11.

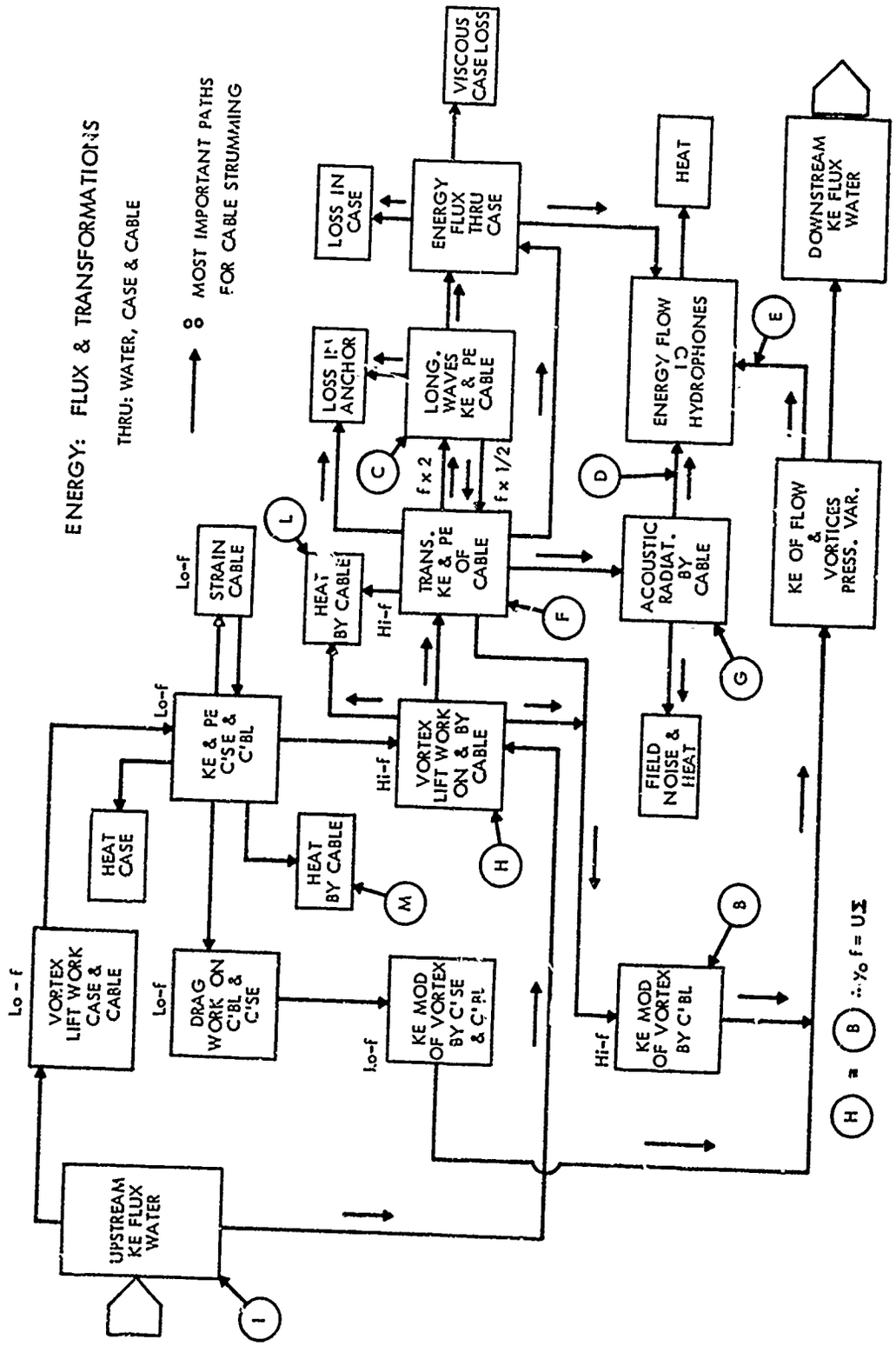
ENERGY: FLUX & TRANSFORMATIONS
THRU: WATER, CASE & CABLE
MOST IMPORTANT PATHS FOR CABLE STRUMMING
VISCOUS CASE LOSS
LOSS IN CASE
ENERGY FLUX THRU CASE
HEAT
DOWNSTREAM KE FLUX WATER
LOSS IN ANCHOR
LONG. WAVES KE & PE CABLE
ENERGY FLOW TO HYDROPHONES
f x 2
f x 1/2
STRAIN CABLE
HEAT BY CABLE
TRANS. KE & PE OF CABLE
ACOUSTIC RADIAT. BY CABLE
KE OF FLOW & VORTICES PRESS. VAR.
KE & PE C'SE & C'BL
VORTEX LIFT WORK ON & BY CABLE
FIELD NOISE & HEAT
HEAT CASE
HEAT BY CABLE
VORTEX LIFT WORK CASE & CABLE
DRAG WORK ON C'BL & C'SE
KE MOD OF VORTEX BY C'SE & C'BL
KE MOD OF VORTEX BY C'BL
UPSTREAM KE FLUX WATER
Lo-f
Hi-f
H = B ÷ % f = U

FIG. 3.1

individually, and most to a certain extent quantitatively in the next section, together with a presentation of numerical estimates of its values.

In the remainder of this section, we shall trace the relevant physical processes through the system beginning with (I), the initial flow of water upstream toward the moored system, and ending with the downstream flux of water and vortices conveyed away in it. The Process (I) furnishes us with a handy energy-source-rate figure as a reference magnitude. Consider the area of the cable and case presented perpendicular to the flow. The amount of kinetic energy $\dot{K}$ carried per second across this area is an estimate of the energy available to produce motion of the system (i.e., gross flutter and strumming). Naturally, there must be other later transformations of this energy ending in complete dissipation in heat or a convective transfer away with the stream, since the mine and cable motion generated presumably does not grow in amplitude without limit.

Hence, as an upper limit* for Process (I), we have the number

$$\dot{K}(I) = \tfrac{1}{2}m_o(2R_1L_1U_1^{\,3} + 2R_2L_2U_2^{\,3}) \quad \sim 2136 \text{ in-lb/s} \qquad (3.1)$$

of energy units available for $U_1 = U_2 = 1$ knot. (See Chapter 4.) First some of this energy ordinarily goes into kinetic and potential energy of the gross motion of the cable and case.

This transformation is accompanied by the modification of the flow past the case in the formation of a series of vortices, as explained earlier, which then produce an alternating force - chiefly lateral (references 9, 10, 13, 16, 17, 22, 24, 31) - effective in moving the case alternately back and forth sideways, i.e., across the stream. The case then can drag the cable sideways with it. However, this motion and the subsequent transformation of the associated energy is to be suppressed in the remainder of this report. Its chief effect on cable strumming is to modulate the speed of flow past the cable, and to make it non-uniform along its length. Hence, the frequency spectrum of the strumming vibrations will be shifted and enriched. There may also be some other transient non-linear flow interaction with those vortices which produce the strumming, possibly significant at least near the case. A second portion of this available energy simply remains in the water, part of it being rotational in the associated

*Since we are not at this point taking dip or tilt of the system into account.

vortex flow pattern and some is converted to heat, process (M); it is all conveyed downstream with the mass transfer of water. A third portion is transformed into a series of long vortices shed along portions of the cable, with the resulting pressure forces producing alternating sideways motions - Process (F) - of the cable - i.e., strumming. These forces press on the cable and effect a transfer of energy to it by doing 'lift' work called Process (H). Energy can then either be removed from or delivered back to the water, modifying the vortex pattern nearly at the characteristic Strouhal cable frequency, Process (B); some of this, too, is then lost in heat, Process (L). The remaining kinetic energy in the water subsequent to Process (B), is conveyed downstream with the rest of the flow pattern. If some of the partly conveyed vortices pass near hydrophones (not too likely with a nearly upright case), pressure variations can add via Process (E) to the noise picked up otherwise through the water from acoustic radiation, mentioned later as Process (D). This part of the energy becomes ultimately dissipated in heat or electrical signals - the remainder is carried away downstream.*

Let us return to trace other energy fluxes of interest, those stemming from the strumming of the cable - Process (F). It is helpful to think of the forced transverse motion of the cable as resolved into systems of 'tension' and 'bending waves' along the cable, traveling in both directions. As we shall see, associated longitudinal compression and rarefaction waves are also generated, too. (Process (C)).

Even if some characteristic normal mode of transverse motion is excited, as a resonance vibration, one can resolve this motion into such traveling waves. One reason that it is useful to introduce this conception is because it will ultimately help surmount the difficulties presented by the non-uniform equilibrium tension in the cable, the cable curvature, and possibly other non-uniformities which might be introduced in its density and elastic properties. A second reason is that one can simply and most naturally use for each mode the universal relation for all periodic waves

$$\lambda f = c \tag{3.2}$$

to estimate the associated wavelength, in turn useful in helping make the required energy estimates. More explicitly, one recalls that: (1) transverse wave motions in a flexible cable obey one kind of

*Another mechanism 'collapse' of the vortex system mechanically, i.e., macroscopically, as distinct from viscous decay into heat, might occur as a result of 'collision' with obstacles. Acoustic radiation might be produced thereby, but its magnitude is not estimated herein.

'wave equation' with a wave speed depending on the square root of the tension divided by the linear density, (2) transverse bending waves obey a second kind of 'wave equation' whose wave speed is frequency dependent, i.e., dispersive, and depends on the cable bending modulus, and (3) transverse waves are also coupled to a longitudinal stretch or compression which can propagate as waves whose speed depends on the Young's stretch modulus of the cable. It is our aim in the next section to try to estimate roughly the coupling between some of these modes and thereby make a first quantitative estimate of the energy partition between them. It suffices here to point out that the processes under discussion are labelled (C) on Figure 3.1.

Now if waves of these types are traveling along the cable, they carry energy which can be transmitted to other parts of the system. One path is along the cable to the anchor. It is very difficult to estimate the energy transmitted to the anchor and lost there because of the uncertainty and complexity in the boundary conditions at this attachment. Perhaps a best first approximation would be to say that the connection is perfectly rigid so there is a complete reflection of the energy at point 'A'. However, in the last section, there is a further discussion of this process. The situation at the case can be quite different, however. Indeed, it appears that many of the strumming difficulties encountered in past field tests stemmed from the transmission of acoustic waves of longitudinal type along the cable to the case bottom. These vibrations were then transmitted into and through the steel case plate structure - perhaps setting up some local elastic plate resonances - and ultimately affecting the hydrophones which were sensitive to accelerative motions of their bases. The complexity of this 'loss' mechanism is such that more theoretical work should be done on it to supplement experiments which seem to be required.

Two practical approaches have, in the past, lessened the difficulties with the noise transmitted to the hydrophones via this route. The hydrophone pickup elements were themselves isolated acoustically from their mounts, and a 'lossy' rope linkage about six-feet long was sometimes inserted between the upper cable end and the point of attachment 'C' to the case. Optimization of these means was not completely determined, however, and further tests are indicated - described in the last section.

The cable bending waves are completely reflected at the case, in view of the type of flexible attachment previously posited for the system. However, the time varying direction of the tension T_2 due to the transverse flexural waves can produce a transient shearing force which might be effective in producing a transient couple on the case. However, the case and water masses and moments of inertia are so very

large that a significant energy transmission via this manner seems highly unlikely; our first rough estimate is, therefore, zero for this as a loss mechanism.

There remain two further phenomena to be taken into account. They are labelled (G) and (D) on Figure 3.1. Because the transversely vibrating cable acts like an acoustic line source, we must estimate how much energy per second is likely to be radiated into the water - Process (G). As a result, these pressure waves through the water can also reach the acoustically sensitive element of the hydrophones mounted in the case - Process (D).

It is important to acknowledge again at this point the assistance and stimulus given to the present study by previous NOL studies.* We have extended some of the estimates appearing there, added others, and refined several points. Our effort has, of course, been concentrated on extending only the knowledge about the cable strumming phenomena.

---

*See references 2, 9, 10, 16, 22, 24, 30. In reference 16, Process (E) is examined and found ineffective in noise production. We do not repeat this calculation here.

CHAPTER 4

ORDER OF MAGNITUDE ESTIMATES OF SOME WORK-ENERGY TRANSFORMATION RATES

INTRODUCTION

In the following formulation-sketch of the rates of energy transfer and transformation, almost every estimate indicates a need for more experimental and theoretical studies of the process considered. There are also some processes mentioned in the preceeding chapter for which no formulation is presented in this one. Several of these, too, should be investigated more completely before one can say he has a complete understanding of the physical acoustic and hydrodynamic behaviour of moored mine systems. It is perhaps a little startling to realize that such an apparently simple mechanical system has such a variety of phenomena - much of it incompletely understood - associated with it. Indeed, this is pointed out in some recent publications by Bertaux (reference 1) of the Woods Hole Oceanographic Institute which describe some excellent engineering and development work carried out, successfully, to solve particular problems encountered in a variety of situations. One hopes that by analyzing the phenomena associated with the strumming behaviour in more detail, whether or not it constitutes an existing engineering problem, future even more imaginative and useful systems can be planned and engineered.

In writing down the formulas descriptive of the processes considered in the succeeding discussion, very crude approximations are used although each is based on valid physical principles. There is no overall self-consistent theory yet developed for the curved cable system immersed in a flow field as described in previous sections, which includes all the puzzle pieces we are trying to fit together. Consequently, it is difficult or impossible as yet to give confidence level estimates or even uncertainty limits to the numerical values computed from our formulas. Each formula could have been written with a corresponding dimensionless proportionality constant of order of magnitude unity. Further investigations would presumably lead to an accurate evaluation of it.

We are forced by the complications resulting even from the simple curved cable model described in Chapter 2 and Appendix II, to make some simplifying assumptions and, thus, arrive at the simple formulations of this section. That is, we assume that

$$\phi_o = \phi_2 = \psi = \phi = \overline{\phi}$$

so that the cable is approximated nominally, by a rigid straight line. Moreover, we take $L_o = 0$ and make $L_1 = \Delta L_1 = L$; likewise, $U_1 = U_2 = U$.

Next, we 'lump' the distributed drag, weight, and buoyancy loads together and apply their resultant at the center of mass of the case. This clearly entails a small error for the effects of buoyancy and weight, and a larger one for the drag. Consequently, the tilt of the case for a given speed (obtained from elementary equilibrium considerations) is far larger, by a factor of about two, than it ought to be. The magnitude of this error can be easily noted by comparison of the nominal tilt value $\overline{\phi}$ with the ϕ_2 values calculated by the method of Appendix II from the more accurate picture described in Chapter 2.* Similarly, we use a nominal tension value, $\overline{T}$ (equal to that acting on the case) for calculation of transverse wave effects. Obviously, bending waves are completely suppressed in this model.

However, as far as orders-of-magnitude are concerned, most of the energy transformation phenomena associated with cable strumming are quite insensitive to the angle $\overline{\phi}$ (for small values); the curvature of the cable is likewise assumed to be irrelevant in making these estimates. It is on such an elementary, but quite physical, basis that we are able to formulate and then evaluate numerically, definite expressions for the various energy-work-rate processes of this and the preceding sections.

Numerical values are given in inch-pound (force)- second units; see Table 4.1 for typical parameter values for the system.** In this system, it may be useful to the reader to know that

1 in-lb = .113 joule, or

1 in-lb/s = .113 watt.

A force of one pound equals 9/2 newton approximately.

*Indeed, this is the reason for making the detailed analysis of the equilibrium configuration. See Figure AII-5.
**Also see BASIC Program H22032 to obtain results for other input values.

TABLE 4.1

Data**

Water

***$\underline{m_o}$ = .935 x 10^{-4} lb-s^2/in^4

$U_2 = U_1$ = 20.1 in/s

$\underline{\nu}$ = 2.3 x 10^{-3} in^2/s

$\underline{c_o}$ = 6 x 10^4 in/s

$\underline{C'}$ = 1.2, $\underline{C''}$ = .75

Case

$\underline{L_2}$ = 108 in

$\underline{2R_2}$ = 21 in

$\bar{a}_2$ = 2268 in^2

Re_2 = 1.64 x 10^5

$\underline{B_2 - W_2}$ = 250 lb

D_2 = 42.9 lb

Cable

$\underline{L_1 = L}$ = 36000 in

$\underline{2R_1}$ = .093 in

$\bar{a}_1$ = 3348 in^2

Re_1 = 725

$-B_1 + W_1$ = 60.4 lb

D_1 = 53.7 lb

$\underline{m}$ = .733 x 10^{-3} lb-s^2/in^4

W_1 = 69.2 lb

T = 213 lb

c_T = 6.6 x 10^3 in/s

Cable

$\underline{E_c}$ = 18 x 10^6 lb/in^2

c_c = 1.57 x 10^5 in/s

*$\underline{\cos\bar{\phi}}$ = .891

$\sin\bar{\phi}$ = .454

L - Z = 32,076 in

= L $\cos\bar{\phi}$

Dynamics

$\underline{\sum}$ = .1

$\underline{S_t}$ = .2

f = 38.5 Hz

$\underline{y_o}$ = .01 in (.04)

$\bar{N}$ = 451

$\underline{g}$ = 386 in/s^2

*This value of $\bar{\phi}$ is a nominal average' based on L - Z = 32,076 in. In degrees $\bar{\phi}$ = 27, defined by

$$\cos\bar{\phi} = \frac{L-Z}{L} \quad .$$

We also take $\psi = \phi_o = \phi_2 = \bar{\phi} = \phi$ in this table.

**The mass unit in the in-pound-section system is the (lb-s^2/in). One kg mass weighs 2.2 lb (9.81 newtons) so 2/9 lb = 1 newton (N). Moreover $\frac{9}{2}$ N, i.e. 1 lb, acting on 175 kg (or 386 lb wgt) produces an acceleration of 2.54 cm/s^2. Hence 175 kg is the metric size of the in-lb-s mass unit.

***Underlined quantities are input valves. All others are calculated from these.

AVAILABLE ENERGY (Process (I))

It is an easy matter to estimate the kinetic energy in the water flowing up to the case and up to the cable - which must, of course, be diverted in flowing past these objects. These energies can be considered to be available for transformation (via lift and drag forces) into other forms. As a conservative lower limit, we take, for the energy flux up to the case, the projected area normal to the flow velocity of speed U_2, times the kinetic energy density $1/2\ m_o\ U_2^2$; then to determine the rate at which this energy is available to be transformed, we multiply by the flow speed U_2. As discussed previously, an unknown empirically determined factor, somewhat greater than unity and closely analogous to engineering lift and drag coefficients could have been introduced to get a more exact estimate of the volume of water affected - but we shall ignore this for present rough estimation purposes.

This is typical of the kind of estimation procedures we use in the remainder of this section. It leads to calculable expressions - which in turn lead to numerical values of orders of magnitude which are obviously inexact but which should be useful in heightening one's intuitive physical feeling for the relative importance of each phenomenon considered.

Thus, we find

$$\text{(I)} \qquad \dot{K}_2 = m_o U_2^{\,3} R_2 \cdot L_2 \cos \phi_2 \tag{4.1}$$

for the average flow past the case. Similarly,

$$\text{(I)} \qquad \dot{K}_1 = m_o U_1^{\,3} R_1 (L-Z) \tag{4.2}$$

is the average rate of kinetic energy flow past the cable, since Z is the dip of the upper cable end.

It is also important to establish the Reynold's numbers for these flows since in this way, one determines which of the Strouhal vortex-shedding regimes is applicable. For the case

$$R_{e2} = 2\,\frac{U_2 R_2}{\nu}\ \cos \phi_2 \tag{4.3}$$

where ν is the kinematic viscosity of (sea) water, $\sim 2.3 \times 10^{-3}\ in^2/S$. (Reference 14b.) For the cable, on the average,

$$R_{e1} = 2\,\frac{U_1 R_1}{\nu}\ \cos \psi . \tag{4.4}$$

In the remainder of this section, for definiteness, we shall choose typical values for various parameters, listed in Table 4.1, underlined, in order to present calculated magnitudes of quantities.

Thus, we find, as listed in Table 4.1, not underlined,

$$R_{e1} = .725 \times 10^3 \qquad (4.5)$$

$$R_{e2} = 1.64 \times 10^5$$

for a flow speed of one knot (20 in/s).

Likewise on this basis

$$\text{(I)} \qquad \dot{K}_1 = 1135 \text{ in-lb/s} \qquad (4.6)$$

$$\dot{K}_2 = 769 \text{ in-lb/s}$$

are the available energy rate values (lower limit) for flow past the cable and case.

Note that the larger portion might conceivably be transferred to the system via the cable. However, it remains to consider in detail how such transformations could take place, i.e., by doing work in an appropriate fashion.

HEAT PRODUCTION (Processes (L) and (M))

It is instructive and important to estimate the order of magnitude of the various available loss mechanisms - including heating of the water by means of shear and viscous stresses for in this way, reasonable estimation of vibration amplitudes must be made (lacking a more detailed theory).

The shear stress set up in laminar flow past the cable is of order of magnitude

$$\sigma = m_o \nu \frac{U_1}{2R_1} \qquad (4.7)$$

$$= 4.65 \times 10^{-5} \text{ lb/in}^2$$

so that the total shear force on the water along the entire cable affected is roughly

$$2\pi\sigma R_1 L_1 = .489 \text{ lb.} \qquad (4.8)$$

This assumes a velocity gradient of the order of $U_1/2R_1$. This illustrates, among other more important matters, the insignificance of this as a drag mechanism in comparison with the "vortex-induced" drag which can also be laminar (It is turbulent at higher Reynold's numbers.) However, the loss rate from the cable by heating the water is

$$\text{(M)} \qquad \dot{Q}_1 = 2\sigma\pi R_1 U_1 L_1 \cos\psi = 8.77 \text{ in-lb/s.} \qquad (4.9)$$

Vibration of the cable can add to this loss mechanism by increasing the relative speed, but it is quite small, at least for an amplitude, y_o, of vibration (strumming) of .01 inch adopted to obtain a first estimate of amplitude dependent quantities. For certain reasons discussed later, we also calculate values for y_o = .04 inch.* Then, if f is the Strouhal frequency of the order of 38.5 Hz, we have a typical maximum velocity component due to vibration of magnitude $2\pi f y_o$ = 2.42 in/s. (9.68)* The corresponding estimate for the heat dissipated is

$$\text{(L)} \qquad \dot{Q}_T = m_o' \frac{(2\pi f y_o)^2}{2} \pi L_1 = .0713 \text{ in-lb/s} \quad (1.14)^* \quad (4.10)$$

This is formulated analogously to the previous expression except for the factor 1/2 inserted because of the vibratory nature of this velocity component.

TRANVERSE (LIFT) FORCE (Process (H))

The cable experiences a force on it, transverse to the ambient flow direction, every time a vortex peels off. This shedding phenomenon, described in much more detail in Chapter 5, results in a displacement of the aft-flow-stagnation point through an angle $\Delta\theta$ from its normal position in steady laminar flow. See Figure 4.1 (a) and (b). The result is the establishment of a concomitant net non-zero circulation about the cable, resulting in a Kutta-Joukowski type of lift force (references 16, 22).

It is extremely important to determine, for cable strumming, the magnitude of this force, and remarkable that a detailed, correct theoretical description has been so long in appearing. In the next section, we give an outline of a theoretical argument, which furnishes an estimate of the value of the Strouhal number; it also bears promise

*Values of quantities corresponding to a strumming amplitude y_o = .04 inch are given in parentheses immediately following the values for y_o = .01 inch for ready comparison.

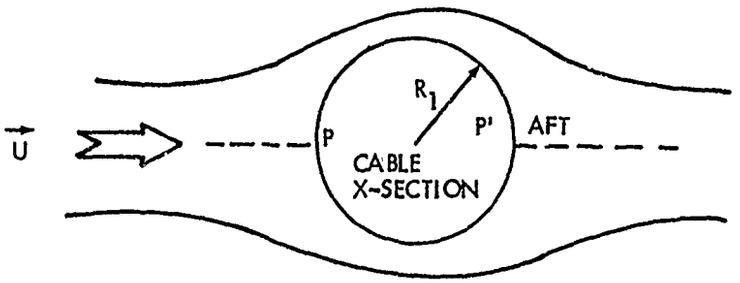

(a) IN STEADY LAMINAR FLOW, THE AFT STAGNATION POINT IS DIRECTLY OPPOSITE THE FORWARD ONE AND IN LINE WITH THE FLOW VELOCITY $\vec{U}$.

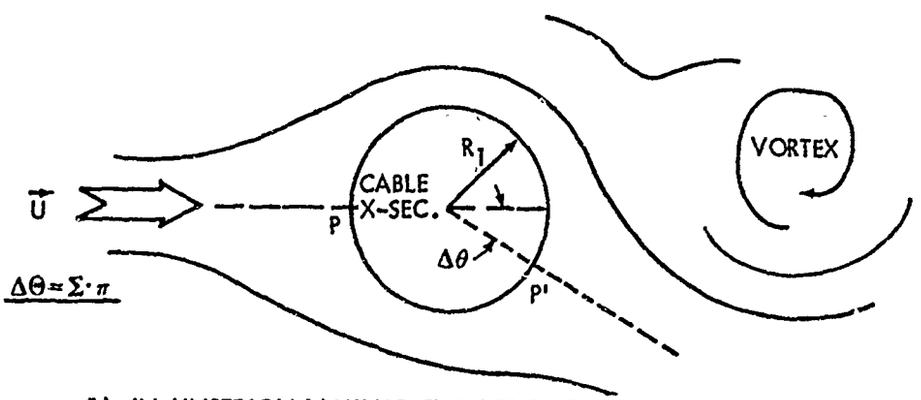

(b) IN UNSTEADY LAMINAR FLOW THE AFT STAGNATION POINT MOVES AROUND THE CABLE X-SECTION AS A VORTEX IS FORMED AND PEELS OFF.

FIG. 4.1

of leading to a detailed physical theory of such lift forces (as distinct from theories based on the Karman vortex street description which is strictly applicable to free-field flow conditions).

Our estimate of the lift forces at this juncture, however, like those of previous authors, utilizes the Kutta-Joukowski formula - strictly valid only for steady flow conditions. This is

$$F_L = m_o \Gamma U_1 (\Delta L_1) \cos \psi \tag{4.11}$$

where Γ is the circulation estimated to be

$$\Gamma = 2 U_1 R_1 \Delta\theta \cos \psi \tag{4.12}$$

and ΔL_1 is the length of cable over which each vortex peels off. It might be called a vortex "coherence length".

The amplitude of motion of the stagnation point is a certain fraction Σ of π radians. That is,

$$\Delta\theta = \Sigma\pi \tag{4.13}$$

and estimates have been given for Σ of about 0.1 (references 16, 31).

Now if $\Delta L_1 = L_1 = L$, then we find

$$F_L = 31.6 \text{ lb} \tag{4.14}$$

a sizeable sideways force. Multiplication by the strumming velocity amplitude $(2\pi f y_o)$ again yields the work rate

$$\text{(H)} \qquad \dot{W}_L = F_L \cdot 2\pi f y_o = 76.5 \text{ in-lb/s (306)} \tag{4.15}$$

(maximum) estimated done by the lift forces in producing cable strumming vibrations and vortices during differing phases of the phenomenon, of course. One guesses that the increase in the drag force associated with cable strumming is of the same order of magnitude as F_L.

<u>ENERGY TRANSFER ALONG CABLE BY WAVES AND AWAY FROM IT BY CONVECTION</u>: (Processes (F) and (B))

We think of the transverse motion produced in the cable by the vortex shedding as composed of waves along it; such waves move with the speed

of kinematic transverse waves - primarily transmitted by the tension forces in the cable. Hence, they travel with the speed

$$c_T = \sqrt{\frac{\overline{T}}{\pi (R_1)^2 \cdot (m+m_o)}} = 6.16 \times 10^3 \text{ in/s} \tag{4.16}$$

for a nominal tension of 213 pounds. They can also be transmitted as elastic bending waves - but these depend on the presence of shear force gradients, supposed to be very small. The transverse wave motion can be described by

$$y = y_o h \left[2\pi f(t - x/c_T)\right] \tag{4.17}$$

where $h \sim 1$ so that the transverse velocity associated with it is

$$\partial_t y = (2\pi f y_o) h' \left[2\pi f(t - x/c_T)\right] \tag{4.18}$$

where we suppose $h' \sim 1$ also.

Associated with this wave motion are energy densities, in the cable, in the adjacent water. Their magnitudes are of the order

$$\begin{aligned} 1/2\ m \left|\partial_t y\right|^2 &\cong 1/2\ m\ (2\pi f y_o)^2 \\ &= .215 \times 10^{-2} \text{ in-lb/in}^3\ (3.44 \times 10^{-2}) \end{aligned} \tag{4.19}$$

in the cable and

$$1/2\ m_o \left|\partial_t y\right|^2 \cong .0274 \times 10^{-2} \text{ in-lb/in}^3\ (.439 \times 10^{-2}) \tag{4.20}$$

in the water. One should think of this second energy density in the water as arising from the modification in the vortex flow structure produced by the transverse motion of the cable. Of course, like the cable motion itself, both kinetic energies appear because of the lift force exerted on the cable by the water, and conversely on the water by the cable.

Now if the wave produced on the cable travels off to the cable ends and is dissipated completely, there will be no transverse motion left--the strumming will die away. This does not always happen, of course, and is the subject for later discussion in Chapter 5. This rate of energy transmission along the cable has a magnitude

$$\begin{aligned} \dot{K}_T &= 1/2\ m(2\pi f y_o)^2\ \pi (R_1)^2\ c_T \\ \text{(F)} \qquad &= .0899 \text{ in-lb/s}\ (1.44) \end{aligned} \tag{4.21}$$

approximately.....not very large. However, when the flow structure of the shedding vortices is modified by the motion of the cable and the vortices move away, or are conveyed away into the water, energy can be dissipated this way at a much higher rate. Assuming a typical convection velocity equal to the projected flow speed $U_1 \cos \psi$, we find

$$\text{(B)} \qquad \dot{K}_W = 1/2\ m_o\ (2\pi f y_o)^2\ U_1 \Delta L_1 (2R_1) \cos \psi = 16.4 \text{ in-lb/s } (263) \tag{4.22}$$

for the estimate of this loss rate.

ACOUSTIC RADIATION (Processes (D) and (G))

The cable strumming phenomenon seems to have caused a certain number of problems because pressure waves generated by the vibrating cable can be picked up directly as noise on hydrophones nearby. It behooves us to make estimates of the pressure field and radiated power generated in this way.

The standard expression for the power radiated from a circular cylinder vibrating transversely to its length (reference 18) in a medium where the sound speed is c_0 (for water, $c_0 = 6 \times 10^4$ in/s)

$$\text{(G)} \qquad P_W = k\ (2\pi f y_o)^2\ \Delta L_1 = .180 \times 10^{-5} \text{ in-lb/s } (2.87 \times 10^{-5}) \tag{4.23}$$

if $\Delta L_1 = L_1 = L$, and where k is the radiation resistance per unit length of the cable (lb-s/in^2):

$$k = 1/2\ m_o \left(\frac{2\pi f}{c_0}\right) (\pi R_1^2)^2\ c_0 = 8.51 \times 10^{-12}. \tag{4.24}$$

The acoustic waves emanating along the cable spread out and impinge on the sensitive hydrophone pick-up area

$$a_H \sim 4 \text{ in}^2.$$

The waves received from different portions of the cable combine according to their received phases, and these, as we shall see, depend on the ratio of the speed of the transverse waves along the cable to the sound speed in water - and the cable-case configuration in relation to the hydrophone.

Let us assume the hydrophone is in the case near the upper cable end. This means that the radiation direction is nearly along the cable, so that η in the next formula is zero. According to Morse, the (complex) velocity amplitude in the water from the cable motion depends on the distance r_n from the nth radiating 'loop' to the point in question by the formula

$$\dot{Y} = \sum_{n=1}^{\bar{N}} \frac{b}{m_o c_0} \sqrt{\frac{c_0}{\pi^2 f r_n}} \cos\eta \; e^{i\left[k'(r_n - c_0 t) - 3\pi/4\right]} \tag{4.25}$$

where

$$k' = 2\pi f/c_0 \;,\; (b/m_o c_0) = 1/2 \left(\frac{2\pi f}{c_0}\right)^2 \cdot (2\pi f y_o)\pi R_1^2 \tag{4.26}$$

and $\bar{N}$ = number of loops vibrating. Hence, the power received at the hydrophone case bottom is, with $\cos\eta = 1$:

$$\text{(D)} \qquad P_H = a_H \; 1/2 \; m_o c_0 \left|\dot{Y}\right|^2 \tag{4.27}$$

Altogether, since

$$\left.\begin{aligned} r_n &= \frac{c_T}{4f}(2n-1) \\ L_1 &= \bar{N}\frac{\lambda_T}{2} = \bar{N}\frac{c_T}{2f} \\ \text{and} \qquad \lambda_T &= c_T/f \end{aligned}\right\} \tag{4.28}$$

is the wavelength, we find

$$P_H = \pi^2 \bar{N} \, m_o \left(\frac{\pi f y_o}{L_1}\right)^2 \left(\frac{2\pi f R_1}{c_0}\right)^3 c_0 \; (L_1 R_1) \; a_H \left|\sum_1^{\bar{N}}\right|^2$$

$$= 7.95 \times 10^{-13} \left|\sum_1^{\bar{N}}\right|^2 \text{ in-lb/s } \left(1.27 \times 10^{-11} \left|\sum_1^{\bar{N}}\right|^2\right)$$

for $f = 38.5$ Hz, $\bar{N} = 451$ (i.e., $L_1 = L = 36 \times 10^3$ in).

In this expression

$$\left|\sum_{1}^{\overline{N}}\right|^2 \equiv \left|\sum_{1}^{\overline{N}}\left(e^{i\pi c_T(2n-1)/2c_0}\Big/\sqrt{2n-1}\right)\right|^2 , \tag{4.30}$$

is less than $2\overline{N} - 1 = 901$.* Since one in-lb/s $\cong$ .11 watt,

$$\text{(D)} \qquad P_H < \underset{(1.15\text{x}10^{-8})}{7.16 \times 10^{-10}} \text{ in-lb/s} \sim \underset{(.12\text{x}10^{-8})}{.79 \times 10^{-10}} \text{ watt} \tag{4.31}$$

is felt to be a crude but very conservative upper bound.

LONGITUDINAL STRAINS AND WAVES (Process (C))

Melde's experiment shows that there are longitudinal waves associated with transverse ones on a string, and conversely. For standing waves, the frequency of the longitudinal ones is double that of the transverse ones.

If we have a vibrating loop, or a traveling transverse wave under tension, there is a longitudinal strain associated with this sideways deformation of amount

$$\epsilon = \frac{s - s_o}{s_o} \tag{4.32}$$

where s is the modified length of the segment of cable normally of length s_c. If

$$y(x) \cong y_o \sin (2\pi fx/c_T) \tag{4.33}$$

is the shape of the transverse wavelet (wavelength $\lambda = c_T/f$), then for a quarter wave,

$$s - s_o \cong 1/2 \int_o^{\lambda/4} (y')^2 \, dx. \tag{4.34}$$

Consequently, we have the estimate

$$\epsilon = (\pi f y_o/c_T)^2 = .387 \times 10^{-7} \; (6.19\text{x}10^{-7}) \tag{4.35}$$

for the associated strain under our approximate conditions.

*However, the number of coherently vibrating loops or half-wavelengths is a highly uncertain quantity.

If the whole cable underwent such a strain, it would correspond to a deformation of

$$\epsilon L_1 = .139 \times 10^{-2} \text{ in } (2.33 \times 10^{-2}). \qquad (4.36)$$

This may be contrasted with the stretch of the cable under a uniform tension of 213 pounds. Since Young's modulus is about

$$E_C = 18 \times 10^6 \text{ lb/in}^2$$

for steel cable, we have

$$\bar{\epsilon} \cong 1.74 \times 10^{-3} \qquad (4.37)$$

or a strain thousands of times as great as the "acoustic" one. The static deformation is similarly greater and equal to 63 inches (or 5 feet). Clearly, the only way for the cable strumming to affect the case and its contents is by the transmission of waves - either through the water as we have already considered, or along the cable and through the case end-plate. The power which might be delivered this way to the end of the cable is

$$P_C = 1/2\, E_C \epsilon^2 \pi R_1^2 c_C$$

$$\text{(C)} \qquad \cong 1.43 \times 10^{-5} \text{ in-lb/s} = 1.57 \times 10^{-6} \text{ watt} \qquad (4.38)$$

$$(3.67 \times 10^{-3}) \qquad (.404 \times 10^{-3})$$

This is 10,000 times larger than the conservative maximum estimate for acoustic waves through the water.

SUMMARY: THE STRUMMING AMPLITUDE y_o

It is instructive to recall the major estimation formulas. This aids in comparing their numerical magnitudes and in demonstrating which physical factors are of most importance in the phenomenon. But of even greater significance, we are able to "derive" a relationship between the amplitude of strumming y_o, the Strouhal frequency f, and the flow speed U_1 and the parameter Σ governing the magnitude of the lift force.

Reference to the flow diagram of Figure 4.1 again shows that the vortex lift work rate (Process (H)) can be considered as the main input to the cable system.* The resulting energy flow is then

*Since we are not considering the gross low frequency motion. Also, Process (E) is calculated in reference 16 and found to yield negligible pressure effects.

partitioned into Processes (B) and (L) and (F). Process (F) in turn acts as input to Processes (G) and (C), and the transfer processes - not calculated - resulting in energy loss rates to the anchor and in the other direction to the case. The acoustic filtration process discussed later deals with the associated phenomena.

Diagramming these, we have the scheme shown in Figure 4.2. This is not a complete sketch, but it does illustrate what we are aiming at. That is, numerically, Processes (F) and (L) are small and almost negligible compared to (B); and Processes (C) and (G) can certainly be accounted for by the energy flow via (F). Moreover, all the energy flow from (H) to (F), (B), (L) seems accounted for. Consequently, we should have the equality: (H) = (B) + (L) + (F), or

$$\cos\psi \; U_1\Sigma = fy_o\left[1 + \frac{\pi\nu L_1 + (m/m_o)c_T\pi R_1^{\,2}}{2R_1\Delta L_1 U_1 \cos\psi}\right] . \tag{4.39}$$

The factor in square brackets has the value 1.01, independently of y_o. Hence we see that, <u>energywise, the strumming amplitude y_o is limited by its relation to f, U, and Σ</u>.

That is, we must have:

$$\cos\psi \; U_1\Sigma > fy_o . \tag{4.40}$$

The numerical estimates we have given were based on two assumed values for Σ and y_o, which clearly might now be modified - y_o might be four times as great, or Σ might be one-fourth as large. If the latter were true, the magnitude of the work Process (H) would be reduced by a factor of four, and all other estimates would remain unchanged on the other hand. The corresponding values for y_o = .04 have been listed as parenthetical alternatives in the preceding discussion. We assume these are the appropriate values until further investigations are made.

This relation (4.40) is similar dimensionally to the static Strouhal relation - but it has dynamic implications important in the consideration of the mechanisms which are instrumental in helping limit the maximum amplitude.

It is interesting to combine (4.40) with the Strouhal relation

$$\cos\psi \; U_1 S_t = 2fR_1 \tag{4.41}$$

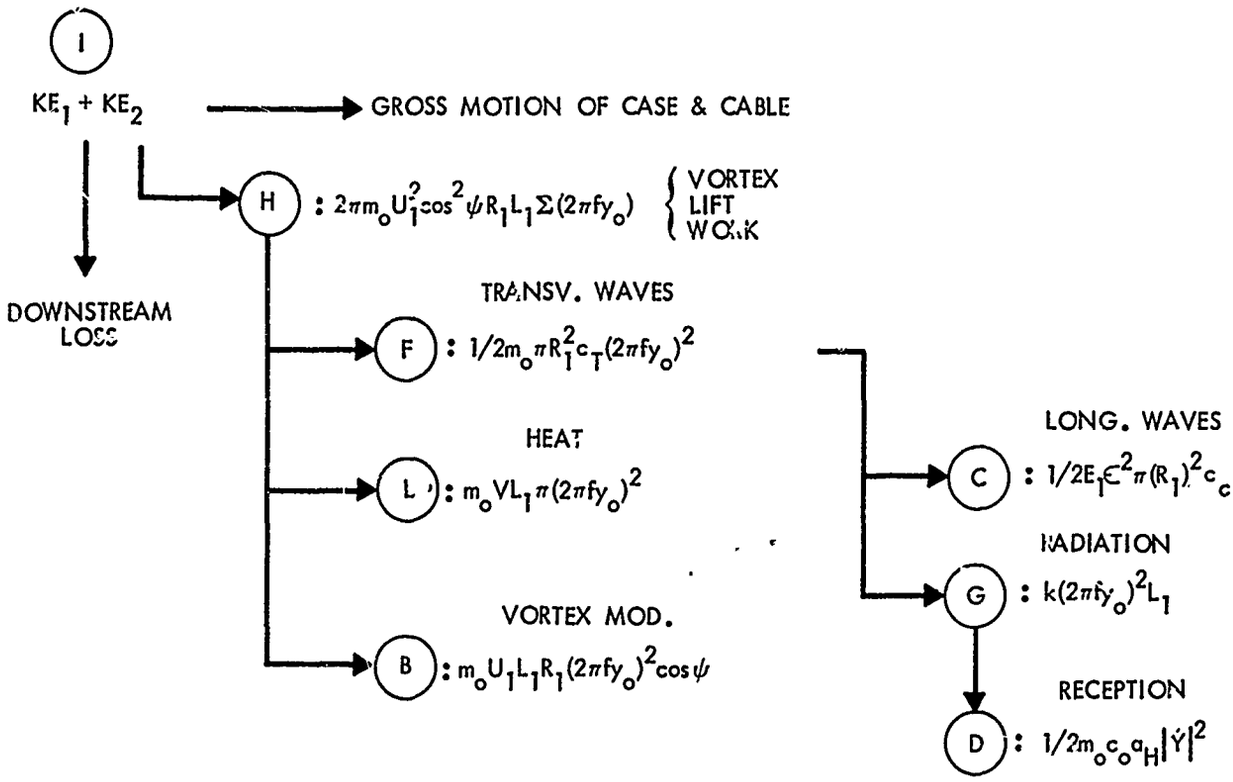

FIG. 4.2 SOME IMPORTANT STEPS IN THE PARTITION AND 'DEGRADATION' OF ENERGY FROM THE FLOW FIELD. SINCE Ⓗ≥Ⓑ, THE STRUMMING AMPLITUDE y_o IS LIMITED.

so that

$$y_o < 2R_1 \frac{\Sigma}{S_t} . \tag{4.42}$$

If Σ indeed has the value .1 often observed, then $y_o < R_1$!

It is also instructive to consider (4.40) in relation to a simple application of Newton's Law assuming a harmonic transverse cable acceleration produced by the lift force F_L. This leads to $m_o < 4m$, which is certainly satisfied!

Until a more detailed theoretical examination of the dynamic inequality (4.40) is available, supplemented by sufficient investigations - theoretical and experimental - of its limits of validity, we must regard this limit on y_o as a conjecture which is possibly valid but not yet sufficiently verified.

CHAPTER 5

CONCLUSIONS AND NEEDED RESEARCH: ANALYSES AND EXPERIMENTS

SUMMARY OF RESULTS

The rough, rather crude nature of many of the approximations entering into the estimates given in Chapter 4 make it almost self-evident what research needs to be done in getting a better, more exact understanding of the cable strumming phenomenon associated with a moored mine system. Nevertheless, we did specify, in Chapter 2, the system and its equilibrium configuration rather carefully. The principal characteristics of the vortex shedding and energy transformation processes were described qualitatively and fairly completely against this setting. This qualitative analysis is summed up in Figure 3.1 of Chapter 3, and yields the background for making most of the quantitative estimates. Despite the approximations used in making them, the numerical values do corroborate the physical principles used and yield a proper perspective for the relative importances and intercorrelations of those processes which were examined. That is, we maintain that the numerical ordering furnished by the estimates in Chapter 4 is correct for the flow regime of greatest importance in moored mine applications, were the flow speed can be up to a few knots. These relative magnitudes led to the ordering shown in a diagrammatic list of most important processes, Figure 4.2 Chapter 4.

There is no doubt that the predominant portion of the initially available kinetic energy in the water flow is ineffective in producing dynamic system response, and much of it is transformed into the gross flutter motion response. Yet, a significantly sizable proportion, in terms of ability to affect acoustically sensitive portions of such systems, is handed over via Process (H) to cable strumming, but then most is re-transformed (Process (B)) into a modification of the vortex shedding phenomenon. In this form of the energy, acoustic effects can only be produced either by the sound field generated by collapsing vortices, or by the convection of vortex flow pressure patterns near sensitive elements. However, Process (F) - energy dissipation in transverse wave motion along the cable - although perhaps only of the order of one percent of (B), can still be effective acoustically by transmission into the mine case via the cable attachment device. Further degradation by acoustic radiation from the cable and reception at the hydrophone is not likely to lead to troublesome effects, but

experimental tests of such a conclusion must be made to evaluate a confidence limit.

A kind of spin-off result of our energy estimation procedure is the recognition of the possible near equality of Processes (H) and (B), which implies a 'dynamic Strouhal inequality relation' to hold between the strumming amplitude and the amplitude of motion of the aft stagnation point on the cable. This is stated simply by

$$fy_o < U_1 \Sigma \cos \psi \tag{5.1}$$

which certainly requires further investigation, both theoretical and experimental.

Finally, we wish to discuss two other specific well-formulated problems needing further research. Each has been investigated theoretically in a preliminary way. The first investigation led to an original rudimentary theory which underlies the well-known 'static kinematic' Strouhal relation, basic to cable strumming and gross flutter. The second consists of a reapplication of acoustic filtration theory to the problem of wave transmission along the cable, through a lossy rope connection and into the case. The discussions, although describing preliminary investigations, are presented in the following two sub-sections, since they were made during the initial phases of this review.

AN ELEMENTARY DERIVATION OF AN APPROXIMATION TO THE STROUHAL RELATION

We examine the regime of Reynold's numbers in which the Strouhal number

$$S_t = \frac{fd}{U} \tag{5.2}$$

is approximately constant (~ 0.2). This regime is

$$10^3 < R_e < 10^5 \tag{5.3}$$

where

$$R_e = \frac{Ud}{\nu} \tag{5.4}$$

is Reynolds' number.

(U = normal stream speed relative to object of transverse diameter d; f = vortex shedding frequency and ν = kinematic viscosity.) Let us assume the following (reference Figure 5.1):

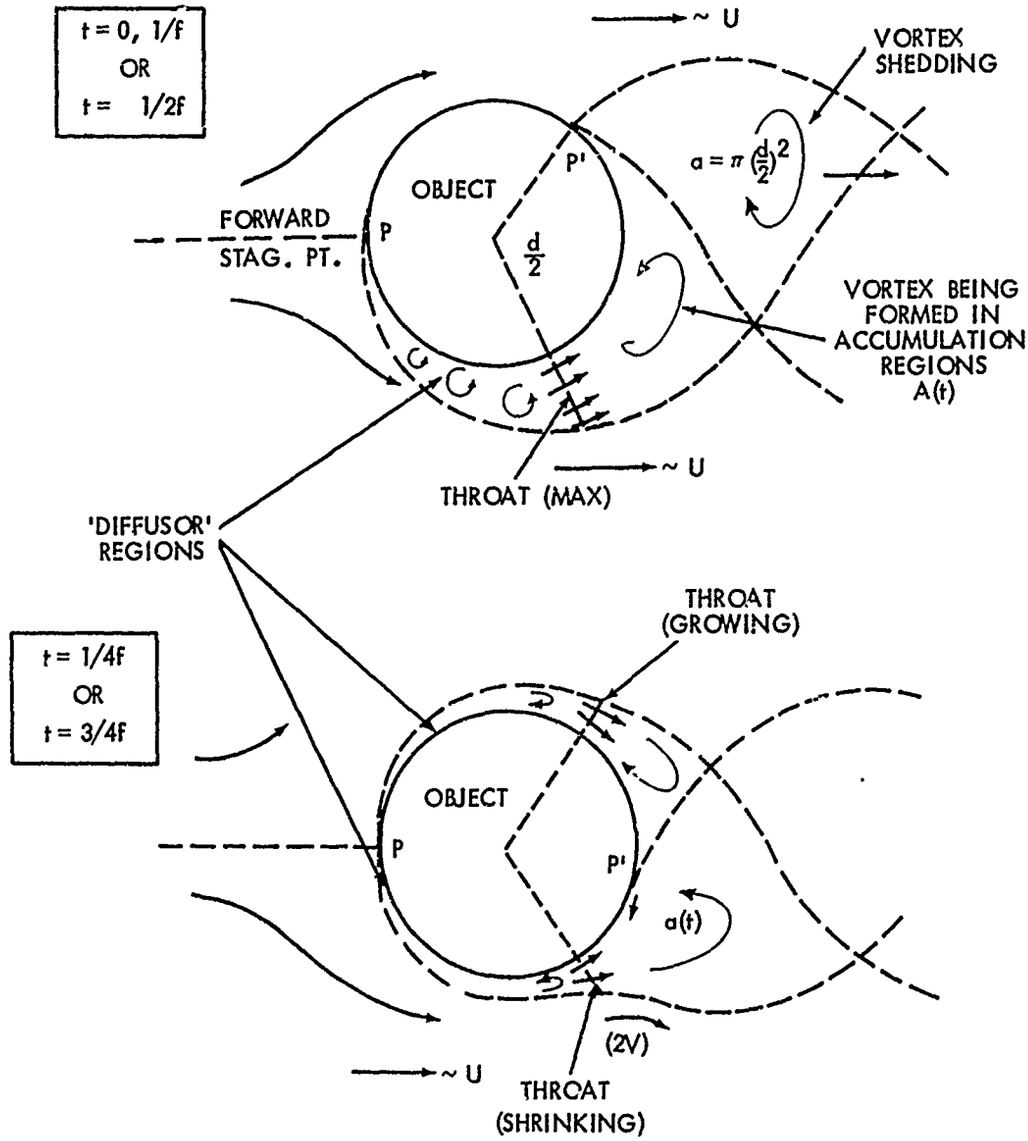

FIG. 5.1 KINEMATICS OF VORTEX SHEDDING.

THE t-VALUES REFER TO DIFFERENT TIMES OR PHASES OVER A PERIOD 1/f. P IS THE 'FORWARD', P' THE 'AFT' STAG. PT.

1) A vortex of cross-section area ($J'\pi\ (d/2)^2$) forms on and sheds from a given side and to the rear of an object of diameter d during each period of the motion. The formation of an oppositely oriented and spinning vortex on the other side is exactly one-half a period out of phase. J' is a proportionality constant of the order of unity.

2) The vortex strength while it is growing is

$$\zeta a(t) \tag{5.5}$$

where a(t) is its time varying cross-section, and ζ is its vorticity (2 times average particle angular rotation speed). We assume that the vortex vorticity is accumulated in 'a' by convection across a kind of a "throat" - and does not diffuse appreciably during the shedding period. That is, 'a' grows by accretion of vorticity from the diffusing region ahead of the throat. Hence, ζ is constant throughout 'a', approximately.

3) The rate of increase of the area 'a' is given by

$$\dot{a} = \ell V \tag{5.6}$$

where ℓ is the throat size, which we shall assume grows rapidly from zero to a maximum, and then shrinks rapidly to zero again.

The fluid velocity next to the cylinder is zero, while that at the farthest point of the throat from the cylinder is $2V = J''U$ with an average value V across the throat.

We also assume

$$\ell = \frac{d}{2}\, J'''\, \sin\, \pi f t \tag{5.7}$$

where J", J''' are proportionality constants possibly of nearly unit magnitude.

At time $t = \frac{1}{f}$, the vortex sheds and a new one begins to form. But at this instant

$$\int_0^{1/f} \dot{a}\, dt = J'\, \pi \left(\frac{d}{2}\right)^2 \tag{5.8}$$

Hence,

$$J''\, J'''\, \frac{d}{2}\, \frac{U}{2}\, \frac{2}{\pi f} \simeq J'\, \pi \left(\frac{d}{2}\right)^2 \tag{5.9}$$

or

$$\frac{fd}{U} = \frac{2}{\pi^2} \frac{J''J'''}{J'} \cong 0.2 \tag{5.10}$$

if $J' = J'' \times J'''$. (5.11)

The question remains: what are the actual values of J', J", and J''' and how are they really related?

LOSSY WAVE PROPAGATION AND THE FILTRATION OF SOUND IN THE MOORING CABLE SYSTEM

We outline in the following a brief derivation of equations for the reflection coefficients of compressional (longitudinal) waves along a cable (which may be slightly curved) attached to an anchor at one end and to a section of lossy rope at the other and through it to the bottom of a mine case. There are two such coefficients - one appropriate for the anchor connection, the other for the rope and case segment. By studying the behaviour of these expressions as functions of physical parameters occurring in the complex acoustic impedances of the elements involved, one hopes to be able to optimize the reflection and transmission processes so that energy of vibration is kept away from acoustically sensitive portions of the system.

Figure 5.2 shows the system contemplated with acoustic particle velocities designated by u' for waves moving from the anchor toward the case and u" for waves traveling oppositely. A subscript R denotes rope variables, while A denotes anchor ones. As before, subscript '2' is attached to case quantities and '1' and '0' to the appropriate cable values near the rope end and the anchor end respectively. Transient overstress (tension) values are denoted by τ, while p stands for $4\pi f$, the cyclic frequency of longitudinal waves, where f is the Strouhal strumming frequency for transverse waves.

For longitudinal waves, the strain is

$$\epsilon = \left(\frac{\pi y_o f}{c_T}\right)^2, \quad \text{where} \quad c_T = \sqrt{\frac{\overline{T}}{(m+m_o)\pi R^2}} \tag{5.12}$$

and the particle velocity for compressional or longitudinal waves is related to it by the usual formula

$$u = \epsilon c_C \tag{5.13}$$

where $c_C = \sqrt{\frac{E_C}{m}}$, "$E_C$" being Young's stretch modulus. In a traveling acoustic wave, we, of course, have the impedance relations $\tau' = mc_C u'$, $\tau'' = mc_C u''$ for the stresses (tensions). We suppose

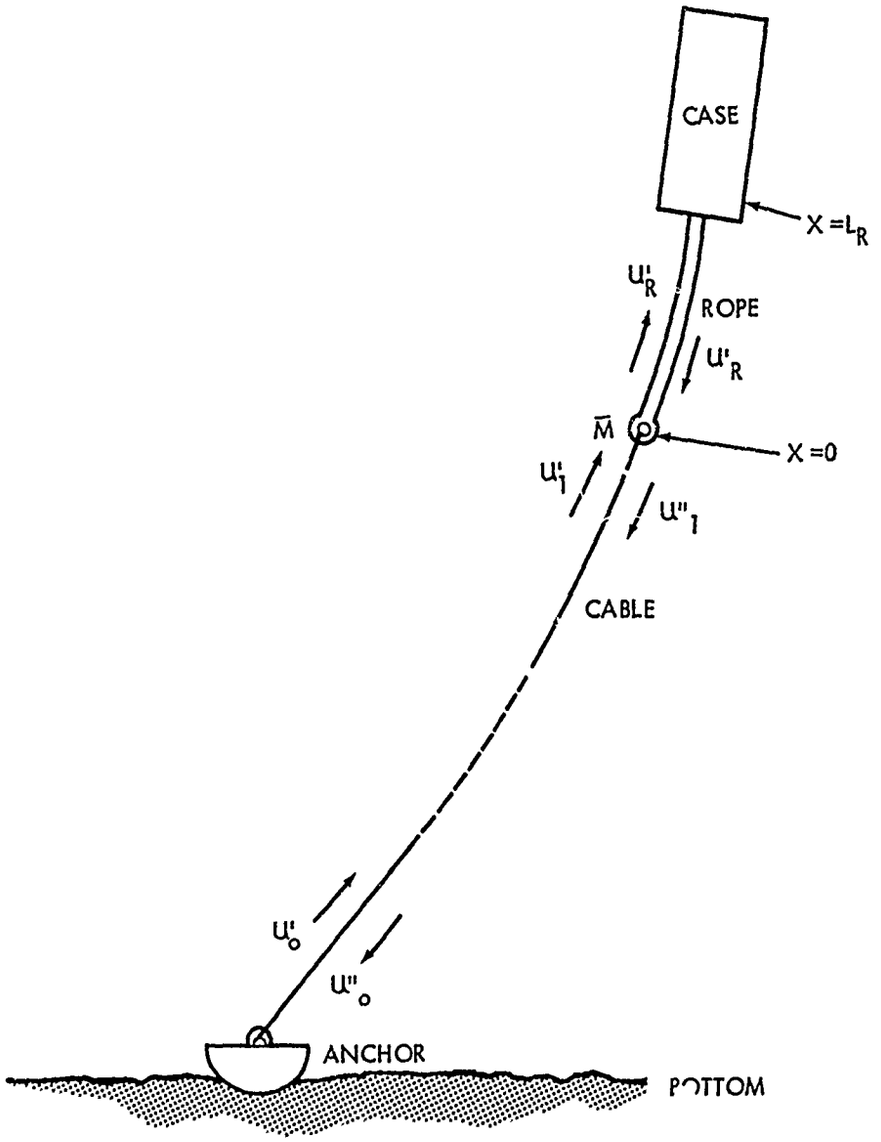

FIG. 5.2 ACOUSTIC WAVE TRANSMISSION AND FILTRATION FOR A MINE CASE AND MOORING CABLE SYSTEM.

that ξ stands for the particle displacement either at the anchor or in the rope, as the case may be.

Reflection At The Anchor. At the point of connection 'A' at the anchor, we require continuity of particle velocity:

$$u_o' + u_o'' = \partial_t \xi \tag{5.14}$$

whereas, if M_A, K_A, R_A are appropriately chosen (empirical) mass, stiffness and resistance parameters for the anchor connection mechanism, Newton's second law posits

$$\begin{aligned}(\tau_o' + \tau_c'')\, a_1 &= R_A \partial_t \xi + K_A \xi + M_A \partial_{tt} \xi \\ &= Z_A(p) \partial_t \xi\end{aligned} \tag{5.15}$$

where $a_1 = \pi R_1^2$.

In this we have supposed that ξ is proportional to e^{ipt} so that

$$Z_A(p) = R_A + i\,(M_A p + K_A/p) \tag{5.16}$$

is the complex impedance of the anchor at this point. Let

$$z_1 = z_o = mc_c \tag{5.17}$$

be the acoustic impedance per unit area of the cable material. Then we have the expression

$$F_o = \left|\frac{u_o'}{u_o''}\right|^2 = \left|\frac{z_1 a_1 - Z_A}{z_1 a_1 + Z_A}\right|^2 \tag{5.18}$$

for the fraction of energy incident on the anchor which is reflected back up the cable. This gives a measure of the effect of the anchor on inhibiting the loss of cable strumming energy.

Propagation in the Rope. Before we can derive a similar coefficient to determine the effectiveness of the rope in acoustically isolating the case from the cable, we must consider lossy wave propagation in the rope.

In the cable we are able to write expressions

$$u' = u_1' \, e^{ip(t - x/c_C)}$$
$$u'' = u_1'' \, e^{ip(t + x/c_C)} \tag{5.19}$$

for the component traveling waves in terms of particle velocity amplitudes u_1' and u_1'' at $x = 0$ (where the rope is connected to the cable). In the rope, on the other hand, we must write

$$u' = u_R' e^{-\alpha x} e^{ip(t - \beta x/p)}$$
$$u'' = u_R'' e^{\alpha(x-1)} e^{ip(t + \beta x/p)} \tag{5.20}$$

where

$$\beta^2 - \alpha^2 = p^2/c_R^2$$
$$\alpha\beta = rp/c_R^2 \tag{5.21}$$

and c_R is the speed of propagation while r is a dissipation constant for the rope. That is, particle displacements in the rope obey the lossy wave equation (ref: 20a)

$$\partial_{tt}\xi_R + 2r\partial_t\xi_R = c_R^2\partial_{xx}\xi_R \tag{5.22}$$
$$\xi_R = iu/p, \; c_R^2 = E_R/m_R \quad .$$

As a result, the (complex) rope overstresses are:

$$\tau' = iE_R(\alpha + i\beta)u'/p$$
$$\tau'' = -iE_R(\alpha + i\beta)u''/p \tag{5.23}$$

for the two types of traveling waves. In most cases, $\alpha \sim r/c_R \ll \beta \sim p/c_R$. Hence, the rope has a complex acoustic impedance per unit area:

$$z_R(p) = -iE_R(\alpha + i\beta)/p \, . \tag{5.24}$$

Because

$$\alpha \ll \beta, \tag{5.25}$$

We have

$$E_R\beta/p \sim m_R c_R. \tag{5.26}$$

Reflection at the Rope Isolation Element. At $x = 0$, we suppose the cable and rope to be jointed by a massive linkage $\overline{M}$. Hence

$$u_1 = u_1' + u_1'' = u_R' + u_R'' e^{-\alpha L_R}$$

$$a_1 \tau_1 - a_R \tau_R = \overline{M} i p u_1 \tag{5.27}$$

$$= \overline{Z}(p) u_1$$

where: $\tau_1 = -z_1(u_1' - u_1'')$ and $\tau_R = -z_R(u_R' - u_R'' e^{-\alpha L_R})$.

At $x = L_R$, the rope and case are connected through a system similar to that at the anchor. So we have

$$u_R' e^{-(\alpha + i\beta)L_R} + u_R'' e^{i\beta L_R} = \partial_t \xi_C$$

$$a_R z_R(-u_R' e^{-(\alpha + i\beta)L_R} + u_R'' e^{i\beta L_R}) = -Z_C(p)\partial_t \xi_C \tag{5.28}$$

where: ξ_C is the particle displacement at the case, and

$$Z_C(p) = R_C + i(M_C p - K_C/p) \tag{5.29}$$

is the load impedance at the case.

After a considerable amount of algebraic manipulation, we find an expression for the reflection coefficient:

$$F_1 = \frac{|u_1''|^2}{|u_1'|^2}$$

$$\frac{|(z_1 a_1 - Z^-)Z_C^+ + (z_1 a_1 + Z^+)Z_C^- e^{-2\gamma L_R}|^2}{|(z_1 a_1 + Z^-)Z_C^+ + (z_1 a_1 - Z^+)Z_C^- e^{-2\gamma L_R}|^2} \tag{5.30}$$

where:

$$\gamma^2 = (\alpha + i\beta)^2 = 2irp - p^2$$

$$Z^{\pm} = z_R(p) a_R \pm \overline{Z}(p) \tag{5.31}$$

$$Z_C^{\pm} = z_R(p) a_R \pm Z_C(p) \quad .$$

Since F_1 is of the form

$$\kappa \frac{|\delta'' + e^{-2\gamma L_R}|^2}{|\delta' + e^{-2\gamma L_R}|^2} = \kappa \frac{|D''|^2}{|D'|^2}$$

where: δ' and δ'' are complex parameters independent of L_R, we can plot the numbers D' and D" in the complex plane, as in Fig. 5.3.

There are clearly optimum conditions encountered as the length of the rope L_R is changed, so that there is a maximum energy reflected back into the cable, i.e., the case can be isolated optimally.

What is needed, of course, are the empirical values of the parameters appearing in the acoustic impedances: the lumped quantities R_c, M_c, K_c

R_A, M_A, K_A

$\overline{M}$

and the various distributed quantities. These can be determined by suitable experiments. However, a straightforward acoustic engineering experiment to test the isolation properties of such a rope would seem to be in order as a prior endeavor. One could suspend a mine case in water with adjustable tension and isolation elements inserted in the cable. Longitudinal vibrations of small amplitude in the cable can be generated and the energy transmitted to the case can be measured by suitable acoustic pick-up instrumentation.

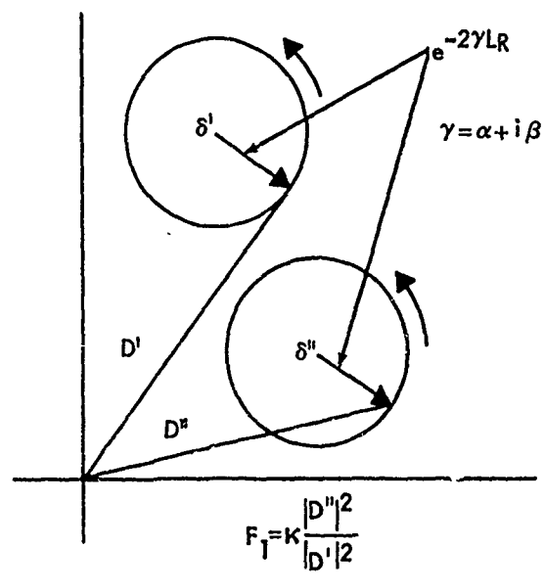

FIG. 5.3 BEHAVIOUR OF REFLECTION COEFFICIENT, F_1, PARAMETERS AS ROPE LENGTH, L_R, CHANGES. - THE RADIUS VECTORS ROTATE ABOUT δ' AND δ'' AND DECREASE IN AMPLITUDE.

APPENDIX I - NOTATION

1. BASIC Computer Program H21032

There follows a reproduction of the 'Introduction' to H21032 which contains definitions or names of all symbols used in READ and DATA statements and in PRINT output statements. These definitions are not reproduced in the listing of the second section of this appendix although each computer symbol is listed with a (P) to designate that it is defined in the computer program. Computer symbols are followed by the symbol used in the report to designate the same quantity, when this is necessary for clarity.

```
    PRØGRAM H21032 ØF 23 FEBRUARY 1972
FØR CALCULATIØN ØF MØØRED MINE CABLE AND CASE
EQUILIBRIUM CØNFIGURATIØNS AS FUNCTIØNS ØF FLØW
                SPEED

TØ SKIP INTRØDUCTIØN TYPE 'Ø'.ØTHERWISE TYPE '1'.
?1


              INTRØDUCTIØN
              ------------
  THE CABLE ØF LENGTH 'L' IS SEMI-RIGID AND CØN-
SISTS ØF A STRAIGHT SECTIØN ØF LENGTH 'LØ' SMØØTHLY
JØINED TØ A CURVED SECTIØN ØF LENGTH 'L1'.THE
AVERAGE FLØW SPEED PAST THE CASE IS'U2',THAT PAST
L1 IS 'U1',AND THAT PAST LØ IS =Ø. LØ IS ATTACHED
TØ THE ANCHØR WHICH EXERTS TENSIØN 'TØ' AND SHEAR,
'SØ' ØN IT. L1 IS ATTACHED TØ THE CASE WHICH
EXERTS ØNLY TENSIØN 'T2' ØN IT.
  TILT ØF CASE IS 'Ø2'; TILT ØF LØ IS 'ØØ'.DRAG
ØN CASE IS 'D2'; WGT. IS 'W2'; BUØYANCY IS 'B2';
NET BUØYANCY IS 'N2'; CASE LENGTH IS 'L2'.
  RADIUS ØF ARC L1 IS 'R'; 'N1' IS NET WGT. ØF L1
AND 'NØ' THAT ØF LØ; 'N' IS NET WGT. ØF ENTIRE
CABLE. ALL 'NETS' INCLUDE BØTH INTRINSIC WEIGHT
AND BUØYANCY, I.E. WATER DISPLACEMENT.
  DRAG ØN L1 IS 'D1'. CASE RADIUS IS 'R2' WHILE
THAT ØF CABLE IS 'R1'. HØRIZØNTAL DISPLACEMENT
ØF UPPER CABLE END IS 'X' AND ITS DIP IS 'Z'.
  DIMENSIØNLESS CYLINDER DRAG FACTØR IS 'C1' AND
END DRAG FACTØR IS 'C2'. 'A1','A2',AND 'A' ARE
CASE CYLINDER AND END, AND CABLE (PER UNIT LENGTH)
CYLINDER DIMENSIØNAL DRAG NUMBERS. 'B' IS NET WGT.
PER UNIT LENGTH FØR CABLE.'G' IS GRAVITY ACCEL.
'M' AND 'MØ' ARE CABLE AND WATER MASS DENSITIES.
'P' IS PI=3.141592.
  DATA READ AT 1600 AND 1610 AND LISTED AT 2410
MUST BE GIVEN IN A CØNSISTENT SYSTEM ØF UNITS
AND ØUTPUT WILL BE IN THAT SYSTEM.
```

SYMBOL LISTING

In the following list of symbols, Table IA-1 names, and definitions, subscripts '0' and '1' refer to cable quantities, 'R' to rope quantities, 'A' to anchor, 'H' to hydrophone, 'C' to compressional wave or to case, 'T' to transverse wave quantities, and 'L' to lift forces. Exceptions are m_0 and c_0 referring to water density and sound speed respectively, and y_0, the transverse strumming amplitude. The symbols (B), (C), (D), (E), (F), (G), (H), (I), (L), (M) signify processes; 'A', 'B_1', 'B_2', 'C', 'D' label points, as explained in the text.

TABLE IA-1

1) (P) denotes a symbol defined in Program H21032
2) Page No's. are those where symbol occurs first in text

SYMBOL	NAME OR DEF.	PAGE
A	(P)	
A'	Cyl. side drag no.	10
A"	End drag no	10
A_1	(P) (=A')	
A_2	(P) (=A")	
a	Shedding vortex area	37
a_1	Cable X-section area	40
$\bar{a}_1$	Cable aspect area	20
a_2	Case X-section area	7
$\bar{a}_2$	Case aspect area	7
a_H	Hydroph. sens. area	27
a_R	Rope X-section area	42
B	(P)	
B_1	Cbl. displace. (buoyancy)	20
B_2	Case displace. (buoyancy)	7
b	Sound veloc. ampl. coeffic.	28
C'	Side drag factor	10
C"	End drag factor	10
C_1	(P) (=C')	
C_2	(P) (=C")	
c	Sound speed	7
c_0	Sound speed (water)	20
c_C	Compress. wave-speed (cbl)	20

TABLE IA-1 (Cont)

SYMBOL	NAME OR DEF.	PAGE
c_T	Transverse wave-speed (cbl)	7
c_R	Compress. wave-speed (rope)	41
D	Drag force	56
D'	Complex filter vector (numer.)	42
D"	Complex filter vector (denom.)	42
D_1	(P)	
D_2	(P)	
d	Diameter of cable	37
E_C	Young's mod. (steel)	20
E_R	Young's mod. (rope)	41
F_O	Reflect. coeff. (anchor)	40
F_1	Reflect. Coeff. (rope)	42
F_L	Vortex lift force	25
f	Strouhal frequency (cbl)	2
f_2	Strouhal frequency (case)	52
G	(P) (=g)	
g	Gravity accel.	10
h	Wave-form (transverse)	26
J',J",J"'	Proportionality coeff's.	37
$\dot{K}$	Kinetic energy flux rate	7
$\dot{K}_1$	KE flux rate (past cbl)	21
$\dot{K}_2$	KE flux rate (past case)	21
$\dot{K}_T$	Trans. wave KE flux	26
$\dot{K}_W$	Vortex Mod. KE (cbl)	27
$\dot{K}(I)$	Incident KE flux limit	14
K_A	Acoustic stiff-ness (anchor)	40
K_c	Acoustic stiff-ness (case)	42
k	Radiat. resis-tance (cable)	27
k'	Cyc. wave no. (water)	28
L	(P)	
L_o	(P)	
L_1	(P)	

TABLE IA-1 (Cont)

SYMBOL	NAME OR DEF.	PAGE
L_2	(P)	
L_R	Rope length	42
L_1	Vortex coher. length	19
ℓ	Vortex diffusor throat size	37
M	(P) (=m)	
$\overline{M}$	Acoustic linkage mass	42
M_o	(P) ($=m_o$)	
M_A	Acoustic mass (anchor)	40
M_c	Acoustic mass (case)	42
M_1	Force moment (cable)	60
m	Cable density	20
m_o	Water density	7
m_R	Nylon rope density	41
N	Net wt cable (p)	
N_o	Net wt straight (p) part cbl.	
N_1	Net wt curved (p) part cbl.	
N_2	Net buoyancy case	10
$\overline{N}$	No. of vib. loops	20
n	Running no. vib. loops	28
P_c	Power in compression waves (cbl)	30
P_H	Radiat. power recd. by hydroph.	28
P_W	Rad. power from cable	27
p	Cyc. freq. long. waves	38
$\dot{Q}_1$	Viscous heating (cable)	23
$\dot{Q}_T$	Viscous heating (strumming)	23
R	(P)	
R_1	(P)	
R_2	(P)	
R_A	Acoustic resis. (anchor)	40
R_c	Acoustic resis. (case)	42
r	Dissipation constant (rope)	41
r_n	Distance from vib. loop	28
Re_1	Reynold's no. (cable)	7

TABLE IA-1 (Cont)

SYMBOL	NAME OR DEF.	PAGE
Re_2	Reynold's no. (case)	20
S	Shear force (cable)	60
S_o	Cable shear (at anchor)	11
S_t	Strouhal number	8
s	Stretched seg. of cable	29
s_o	Unstretched cable seg.	29
$\overline{T}$	Nominal tension	20
T_o	Tension (at anchor)	10
T_2	Tension (at case)	10
U	Speed of water flow	2
$U_1^{\perp}$	Water speed past upper cable	7
U_2	[illegible] speed past	10
$U_2^{\perp}$	Water speed [illegible] normal to case	[illegible]
u	Compress. wave part. speed	38
$u', (u_o', u_1', u_R')$	Compress. wave part. speeds (up)	38
$u'', (u_o'', u_1'', u_R'')$	Compress. wave part. speeds (down)	38
V	Ave. flow speed in diffusor throat	37
$\dot{W}$	Rate of working	7
$\dot{W}_L$	Lift work rate	25
W_1	Cable wt.	20
W_2	(P)	
X	(P)	
x	Coord. var.	29
$\dot{Y}$	Complex sound veloc. ampl.	28
y	Trans. cable displace.	7
Y_o	Max. Trans. cable disp.	7
Z	Case Dip	20
$\overline{Z}$	Acous. impedance (link)	42
[illegible]	[illegible] impedance at link	42
$Z_c^{\pm}$	Acous. impedance (rope) at case	42
Z_A	Acous. impedance (anchor)	40

TABLE IA-1 (Cont)

SYMBOL	NAME OR DEF.	PAGE
Z_c	Acous. impedance (case)	42
$z_o=z_1$	Ac. imp. per unit cable length	40
z_R	Ac. imp. per unit rope length	41

GREEK SYMBOL	NAME OR DEF.	PAGE
α	Propag. decay const. (rope)	41
β	Propag. wave const. (rope)	41
Γ	Water Circulation	25
γ	Complex proport. const. (rope)	42
δ', δ''	Ave. filter vectors	42
ϵ	Long acoustic strain (cable)	29
$\bar{\epsilon}$	Static strain (cable)	30
ϕ	Cable tilt	57
ϕ_o	(P)	
ϕ_2	(P)	
$\bar{\phi}$	Nominal cable tilt	19
κ	Reflect coeff. factor	42
λ	Wave length	15
λ_T	Trans. wave length	28
μ	Viscous coeff. (water)	7
ν	Kin. Viscous coeff.	7

TABLE IA-1 (Cont)

GREEK SYMBOL	NAME OR DEF.	PAGE
Σ	Dyn. strouhal no.	20
σ	Shear stress (water)	22
ψ	Ave. curved cable tilt	19
θ	Case tilt rel. to cable	10
$\Delta\theta$	Ampl. stag. motion	23
τ'	Compress. stress dev. (wave up)	38
τ''	Compress. stress dev. (wave down)	38
τ_o', τ_o''	Compress. stress dev. (anchor)	40
τ_1	Compress. stress dev. (link)	42
τ_R	Compress. stress dev. (case)	42
ξ	Long. wave particle displace.	40
ξ_c	Long. wave particle displace. at case	42
ξ_R	Long. wave particle displace. in rope	41
η	Rel. rad. direction	28
ζ	vorticity	37

APPENDIX II

CABLE AND CASE CONFIGURATION

THE CASE EQUILIBRIUM POSITION AND ORIENTATION

Consider the configuration shown in Figure 2.2 and in particular the equilibrium of the cylindrical case.* In practice vortices would peel off, alternately on opposite sides of the case, with vortex axes parallel to the cylindrical case sidewall generators, with the Strouhal frequency

$$f_2 = \frac{S_t(Re_2)}{2R_2} U_2^{\perp} \qquad \text{(AII.1)}$$

where $U_2^{\perp}$ is the relative water speed past the case normal to the generators. We shall assume that, to a close approximation,

$$U_2^{\perp} = U_2 \cos(\phi_2 - \theta) \qquad \text{(AII.2)}$$

where θ is the case tilt relative to the cable end. It is quite possible that successive vortices are joined alternately so that the net result is a continuous "helical" vortex which peels off around the case, as sketched in the Figure AII-1. However, the slow periodic generation and shedding of vortices from the case, and the associated gross cable and case motion are subjects for more detailed discussion elsewhere. We shall assume here that mechanical constraints of some type have made these motions negligible and shall consider in this part of the appendix only the equilibrium of the case under the influence of steady drag and buoyant forces, and the tension force exerted on the bottom of the case by the mooring cable.

Moreover we shall treat as negligible the fluid forces on the case area elements by mainstream flow components parallel to them, only retaining the influence on the drag of the mainstream flow components normal to the elements. Forces on the two end areas will be treated as equal. Also the weight distribution through the case will be treated as uniform, and the gradient of the ambient flow field in

*The type of derivation given in this appendix occurs of course elsewhere, e.g. Ref. #1, 15. It is presented here for ready reference, and furnishes a realistic model with which the simple rectilinear cable model used in making the energy estimates can be compared.

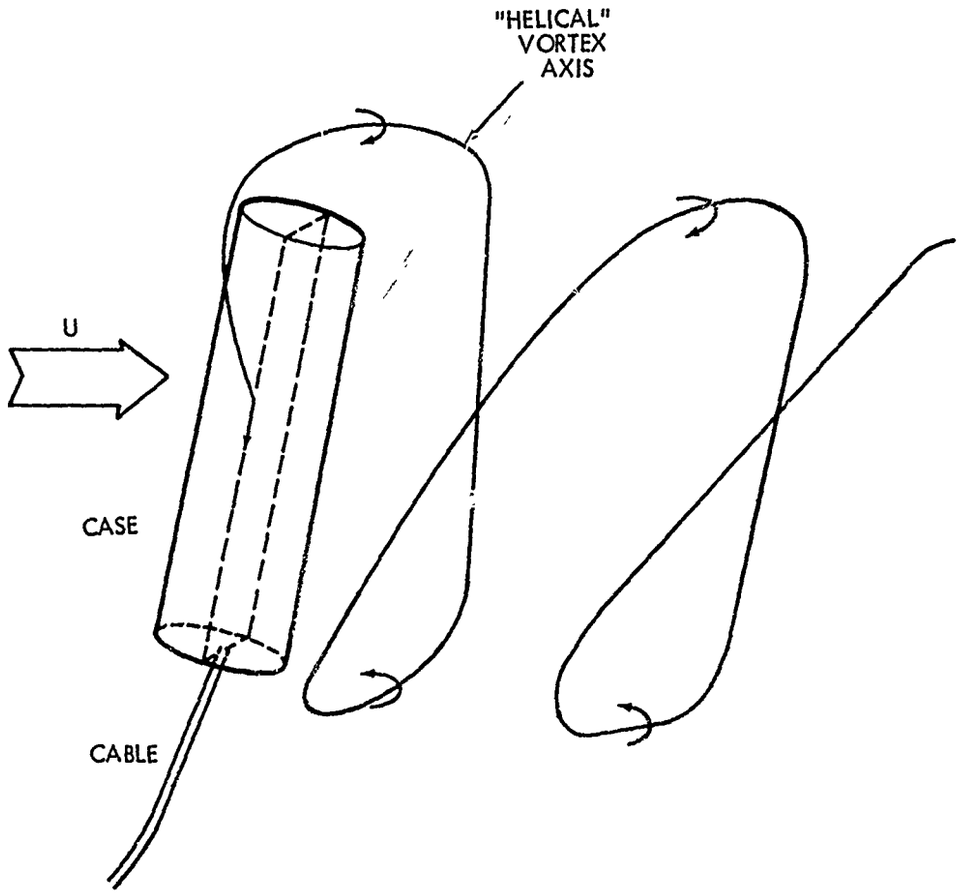

FIG. AII-1 A POSSIBLE METHOD OF VORTEX DETACHMENT FROM THE CASE, AND ITS SUBSEQUENT FORM.

the neighborhood of the case position will in this case be assumed to be zero. The centers of drag, buoyancy and gravity are assumed to coincide.

With these suppositions and constraints, the force and moment equations on the case can be written down and lead to (see Figure AII-2).

$$B_2 = W_2 + T_2 \cos \phi_2$$

$$D_2 = T_2 \sin \phi_2 \qquad \text{(AII.3)}$$

where:

$$B_2 = m_o g \pi (R_2)^2 L_2 \qquad \text{(AII.4)}$$

is the buoyancy force on the case (the displacement), and

$$D_2 = m_o C' R_2 L_2 U_2^2 \cos^2(\phi_2 - \theta) + m_o C'' \pi (R_2)^2 U_2^2 \sin^2(\phi_2 - \theta) \qquad \text{(AII.5)}$$

is the total drag force on it. C' is a drag constant appropriate for the cylinder side face and C" is one for the ends.*

Taking moments about the point of attachment of the case to the cable, and cancelling the factor $L_2/2$, we have

$$B_2 \sin(\phi_2 - \theta) - W_2 \sin(\phi_2 - \theta) = D_2 \cos(\phi_2 - \theta). \qquad \text{(AII.6)}$$

These equations determine T_2, ϕ_2, and θ in terms of the case and water parameters and interaction constants. An immediate consequence is that

$$\theta = 0 \qquad \text{(AII.7)}$$

under the stated hypotheses. Hence, the tilt of the axis of the case simply equals that of the mooring cable end. Of course a redistribution of weight in the case, or unequal fluid forces on the case ends would require a reexamination of this result.

*The usual drag coefficients are C' $\cos(\phi_2 - \theta)$ and C" $\sin(\phi_2 - \theta)$. Our formulation emphasizes that C' and C" have practically constant values with respect to changes in $(\phi_2 - \theta)$.

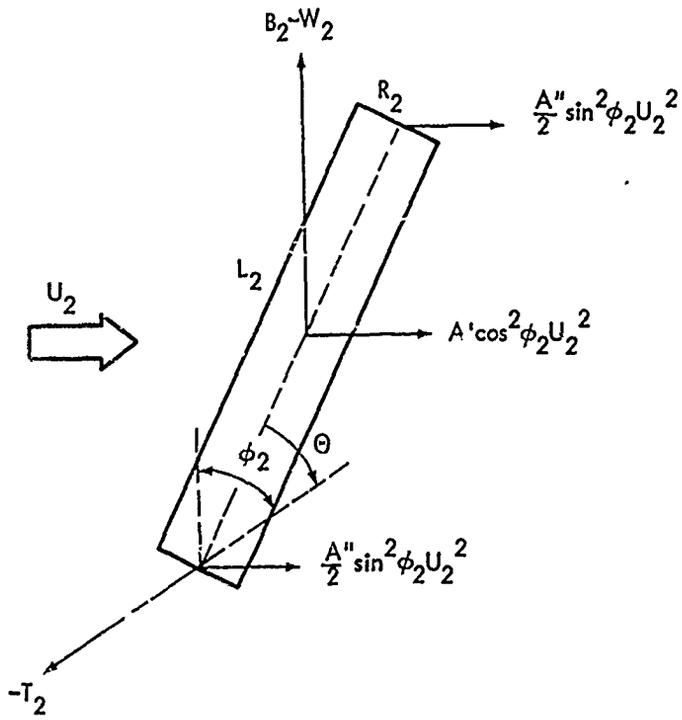

FIG. AII-2 FORCES ON THE CASE. THE TOTAL DRAG IS:
$D_2 = U_2^2(A'\cos^2\phi_2 + A''\sin^2\phi_2)$

Carrying the algebra a step further, we find

$$T_2 = \sqrt{D_2^{\,2} + N_2^{\,2}} \tag{AII.8}$$

and

$$\begin{aligned} \tan \phi_2 &= D_2/N_2 \\ &= U_2^{\,2}(A'\cos^2\phi_2 + A''\sin^2\phi_2)/N_2 \end{aligned} \tag{AII.9}$$

where: $N_2 = B_2 - W_2$

is the net case buoyancy, and

$$A'U_2^{\,2} \text{ and } A''U_2^{\,2}$$

are the maximum values of the drag on the side and ends of the case respectively. The numbers

$$\begin{aligned} A' &= m_o C' R_2 L_2 \\ A'' &= m_o C'' \pi (R_2)^2 \end{aligned} \tag{AII.10}$$

are independent of U_2, if C', and C" are.

These relations permit an interesting geometrical interpretation to be made of their solution. For clarity, omit the subscript '2' on T_2 and D_2, then the equilibrium conditions

$$N_2 = T \cos \phi_2,\ D = T \sin \phi_2 = (A' \cos^2\phi_2 + A'' \sin^2\phi_2)U_2^{\,2} \tag{AII.11}$$

can also be written

$$T^2 = D^2 + N_2^{\,2} \tag{AII.12}$$

$$T^2(D-A''U_2^{\,2}) = N_2^{\,2}(A'-A'')U_2^{\,2}$$

as equations to be solved for T and D, given the values of A', A", U_2 and N_2. Then twice the tilt angle is given by

$$\cos 2\phi_2 = \frac{N_2^2 - D_2^2}{T_2^2}. \tag{AII.13}$$

In the (D, T^2) - plane, the equilibrium solution is quickly obtained from the coordinates $(D_2, T_2^{\,2})$ of the point of intersection of two curves:

(a) a parabola, whose T^2 - intercept is $N_2{}^2$

(b) a rectangular hyperbola, whose asymptotes are the D - axis and the line $D = A''U_2{}^2$ parallel to the T^2 - axis.

These curves are sketched in Figure AII-3; one easily sees how the equilibrium depends on U_2 and on N_2.

The equilibrium cable shape derivatives at the case are of course given by

$$x'(L) = \sin\phi_2 \qquad \text{(AII.14)}$$

$$z'(L) = \cos\phi_2$$

since $\theta = 0$.

THE CABLE EQUILIBRIUM SHAPE

Differential Element Analysis. In Figure AII-4 we depict the forces acting on an element of the cable of length ds when it is in equilibrium. It is assumed that the cable is not completely flexible, i.e., it supports a small bending moment; it is also assumed that the drag is due only to the flow component normal to the cable axis. Moreover, the flow velocity itself is horizontal, and in the x-direction, but its magnitude may depend on the vertical z-coordinate. Hence we assume that the drag force on this element is purely horizontal and has a magnitude

$$\begin{aligned} dD &= m_o U^2(Z)\ \cos^2\phi R_1 C' ds \\ &= AU^2\cos^2\phi ds \end{aligned} \qquad \text{(AII.15)}$$

Note that $C'\cos\phi$ is again the "usual" drag coefficient, and $2ds\cos\phi R_1$ is the projected area of the cylindrical element normal to the flow so that C' has nearly constant values which approximate the values listed in tables for cylinders immersed in flow fields normal to their axes. It is convenient to introduce the cylindrical cable drag number per unit length:

$$A \equiv m_o R_1 C'.$$

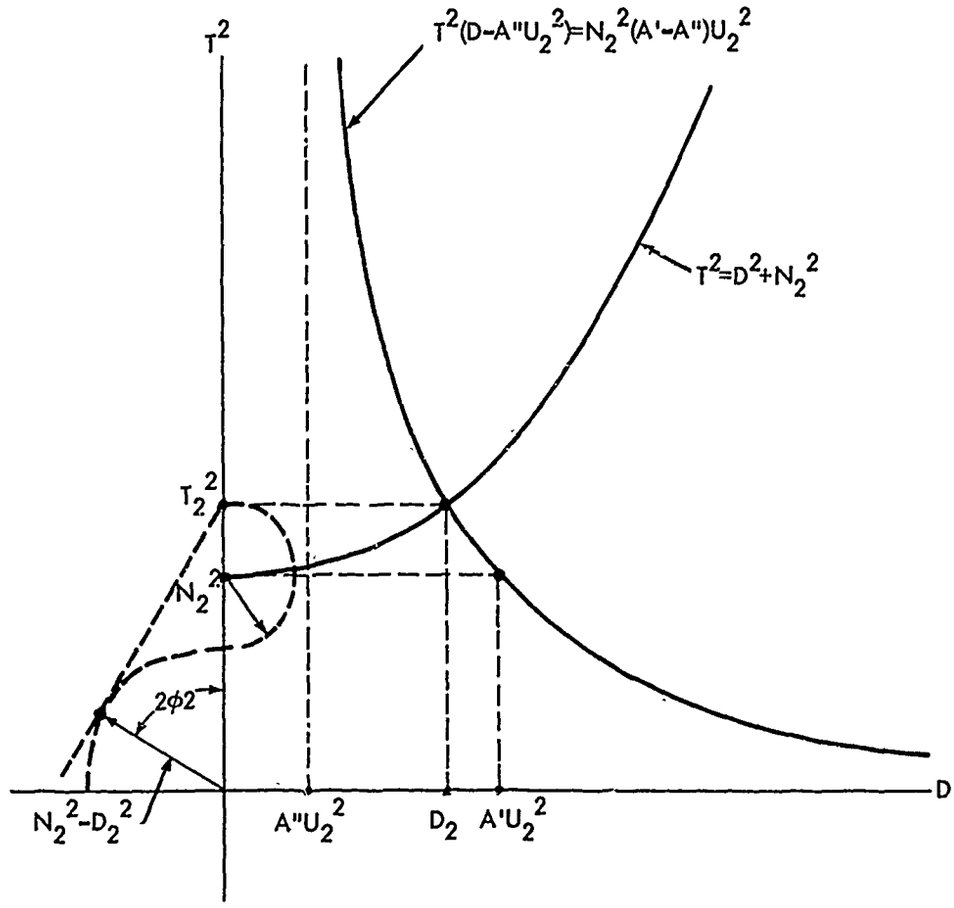

FIG. AII-3 A SOLUTION OF THE CASE-TILT-AND-DRAG, CABLE-TENSION EQUILIBRIUM EQUATIONS.

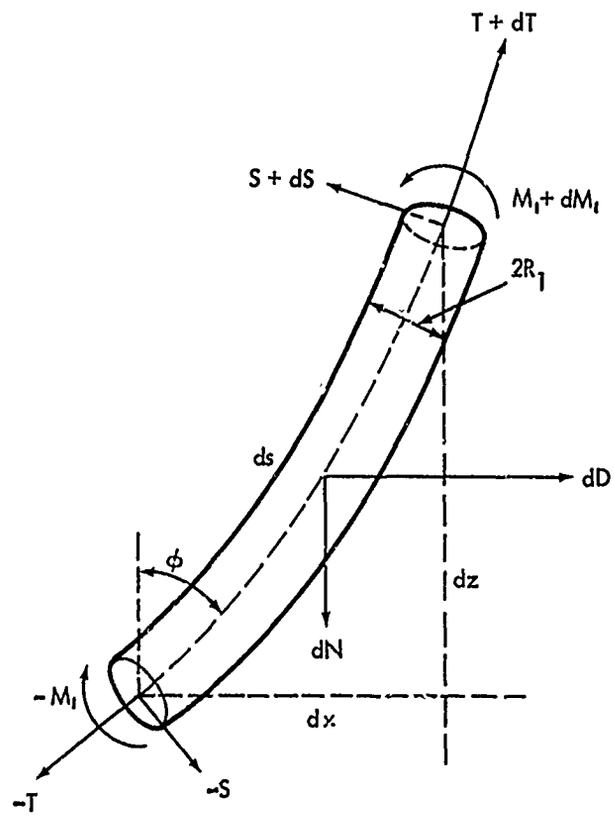

FIG. AII-4 FORCES AND MOMENTS ON A CABLE ELEMENT

Similarly the net weight of the cable element has a magnitude

$$dN = (m-m_o)g\pi(R_1)^2 ds$$
$$= Bds. \qquad \text{(AII.16)}$$

The net bending moment exerted on the cable element by the contiguous cable material is counterbalanced by the moment due to the shear force distribution so that we have

$$S = \frac{-dM_1}{ds}, \quad M_1 = E_c I_c/R \qquad \text{(AII.17)}$$

where I_c is the geometric moment of inertia of the cable x-section, as the condition for rotational equilibrium. The tension and shear force gradients must in turn be counterbalanced by components of buoyancy and drag in the directions along and at right angles to the cable, so that

$$+Sd\phi + dT = -dD \sin\phi + dN \cos\phi \qquad \text{(AII.18)}$$

$$-Td\phi + dS = dD \cos\phi + dN \sin\phi$$

are the remaining differential equilibrium relations.

The intrinsic equation of the cable shape is given by the formula

$$\phi = \phi(s) \qquad \text{(AII.19)}$$

where ϕ is the tilt of the cable axis from the vertical; consequently the parametric equations of the cable axis

$$x = x(s)$$
$$z = z(s) \qquad \text{(AII.20)}$$

are related to the tilt angles by

$$\sin\phi = dx/ds$$
$$\cos\phi = dz/ds \qquad \text{(AII.21)}$$

while the radius of curvature R of the cable at the element is obtained from

$$1/R = -d\phi/ds \qquad \text{(AII.22)}$$

(as s increases, ϕ in general decreases).

A Semi-Rigid Model. Now instead of attempting to use these differential relations to find the cable shapes, given a flow velocity distribution, it is far more feasible to assume a given type of overall shape with suitable boundary values and express some features of the current distribution in terms of the relevant parameters. In this way the differential conditions can be 'integrated' under some general hypotheses which can then be checked for accuracy and consistency.

Thus we hypothesize that the overall cable shape can be represented closely by a straight portion of length L_o attached to the anchor at 'A' (as in Figure 2.2) and connected smoothly to a portion of a circular arc, length L_1, whose upper end is attached to the case at 'C'. Its center of curvature is at 'D'.

Clearly we have

$$L = L_o + L_1$$

and

$$R = L_1/(\phi_o - \phi_2). \qquad \text{(AII.23)}$$

Such a shape will be hypothesized to arise from a flow pattern having almost zero speeds near the bottom of the straight portion - and a non-vanishing flow distribution with average speed U_1 past the curved section, and than a flow with average speed U_2 past the case. Moreover, we posit that (1) the bending moment and shear force at 'C' are zero, since the cable is attached flexibly to the case, and (2) the bending moment at the anchor is zero, but the shear force, S_o, helping sustain the weight of the straight portion does not vanish. Our problem is to try to find U_1 and U_2.

First, however, we must define U_1 more precisely. The definition we use will require that the center of drag and the center of net buoyancy (and weight) of the curved portion coincide, at 'B_1'.

If U(z) is the flow speed at height z above the bottom, then let

$$U_1^{\,2} = \frac{\int U^2(Z)\cos^2\phi\, ds}{L_1\cos^2\psi} \qquad \text{(AII.24)}$$

where the integration is over the curved portion, and

$$\psi = \frac{\phi_o + \phi_2}{2} \qquad \text{(AII.25)}$$

Next, we only consider those flows for which

$$\int U^2(z)\cos^2\phi\sin\phi ds = U_1{}^2R\cos^2\psi(\cos\phi_2-\cos\phi_o) \qquad \text{(AII.26)}$$

Clearly, at least one such speed distribution exists, namely:

$$U^2(z) = U_1{}^2\cos^2\psi/\cos^2\phi. \qquad \text{(AII.27)}$$

This type of model not only leads to a soluble set of relations, but it can be generalized, rather easily, to lead to an exact solution of the differential equation under arbitrary flow conditions - but this is not the task of this report. All we require here is that the cable be "rigid" enough in the assumed shape to support the bending moments and shear force distributions.

A straightforward application of the equilibrium conditions, after a little algebra, leads to the equations

$$\begin{aligned} T_o &= T_2\cos(\phi_o-\phi_2) + AU_1{}^2\cos^2\psi L_1\sin\phi_o - BL\cos\phi_o \\ -S_o &= -T_2\sin(\phi_o-\phi_2) + AU_1{}^2\cos^2\psi L_1\cos\phi_o + BL\sin\phi_o \\ AU_1{}^2\cos^2\psi&\left[R^2(\cos\phi_2-\cos\phi_o)-RL_1\sin\phi_o-L_1L_o\cos\phi_o\right]= \qquad \text{(AII.28)} \\ &= T_2\left[R\cos(\phi_o-\phi_2)-R-L_o\sin(\phi_o-\phi_2)\right] + \\ &+ B\left[LL_o\sin\phi_o - \frac{(L_o)^2}{2}\sin\phi_o + RL_1\cos\phi_o + R^2(\sin\phi_o-\sin\phi_2)\right]. \end{aligned}$$

In these, the bending moment at the case is neglected. If we are given L_1, ϕ_2, ϕ_o, T_2, A, and B then the third relation yields $U_1{}^2$, since ψ is known. The first and second then give T_o and S_o. Physically, the meaning of these is as follows. Consider the cable as a rigid body, acted on by forces T_2, S_o and T_o at its ends. The net weight of the straight portion $N_o = BL_o$ is concentrated at its center, while an average drag force

$$D_1 = AU_1{}^2\cos^2\psi L_1 \qquad \text{(AII.29)}$$

acts at the center of weight and buoyancy of the curved section. The net weight of the curved section is $N_1 = BL_1$ of course, and acts downward.

THE CALCULATION PROCEDURE

The equations for the case equilibrium to can be "turned around" and regarded as defining the flow speed over the case.

Thus we find

$$U_2^{\,2} = N_2 \frac{\tan\phi_2}{A'\cos^2\phi_2 + A''\sin^2\phi_2}. \qquad \text{(AII.30)}$$

Hence, having given N_2, A' and A" we can find $U_2^{\,2}$, knowing ϕ_2. From N_2 and ϕ_2 alone we find T_2 (and the drag D_2).

The procedure to be followed in any given case is then this. We are given values for L, L_1, A', A", A, and B. Curves or tables of T_2, D_2 and $U_2^{\,2}$ versus ϕ_2 can be prepared. Sets of curves or tables (one for each ϕ_2) can be prepared, of T_o, S_o, R and U_1 versus ϕ_o. (E.g. see Figures AII-5, 6, 7.) Given a particular value of U_2 we can find ϕ_2 and then given a value for U_1 we can find ϕ_o - and corresponding values for all other quantities. A BASIC program H21032 to do the calculations has been written. Besides the other quantities one also calculates the displacement:

$$X = L_o\sin\phi_o + R(\cos\phi_2 - \cos\phi_o) \qquad \text{(AII.31)}$$

and the dip:

$$Z = L - L_o\cos\phi_o - R(\sin\phi_o - \sin\phi_2). \qquad \text{(AII.32)}$$

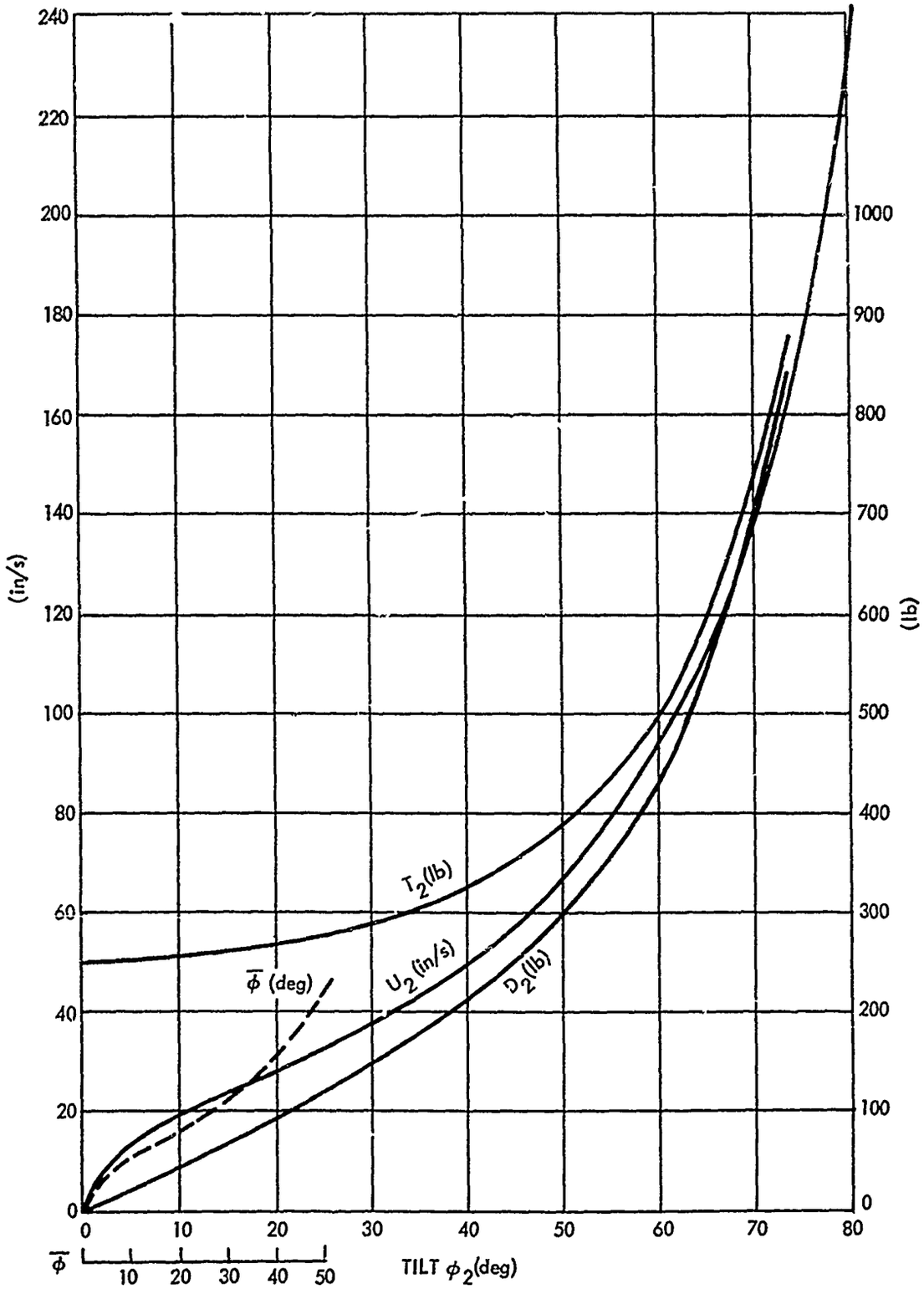

FIG. AII-5 CASE FORCES AND FLOW SPEED VERSUS TILT

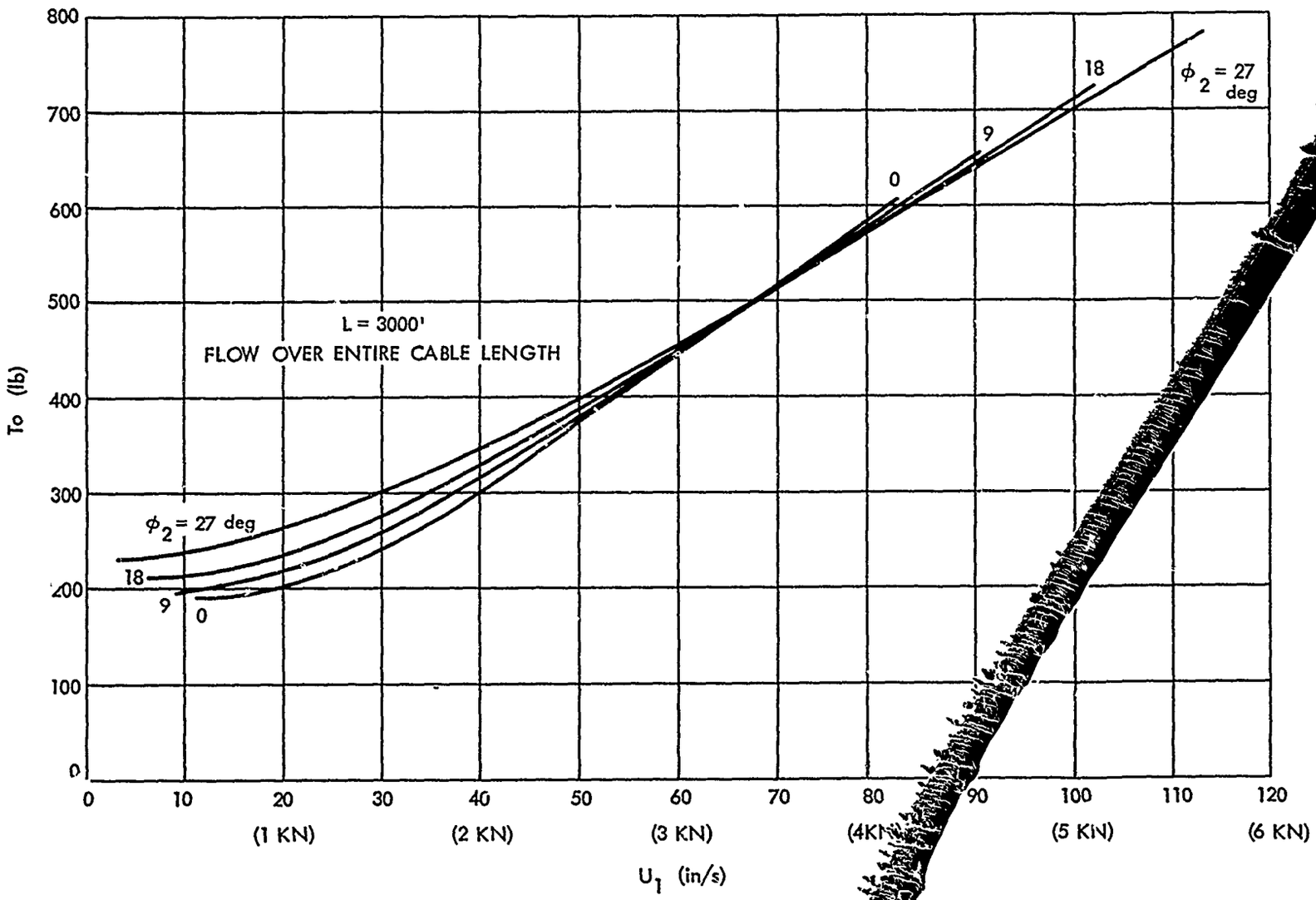

FIG. AII-6 CABLE TENSION AT ANCHOR VERSUS [illegible]X SPEED U_1
(FOR SEVERAL CASE TILTS)

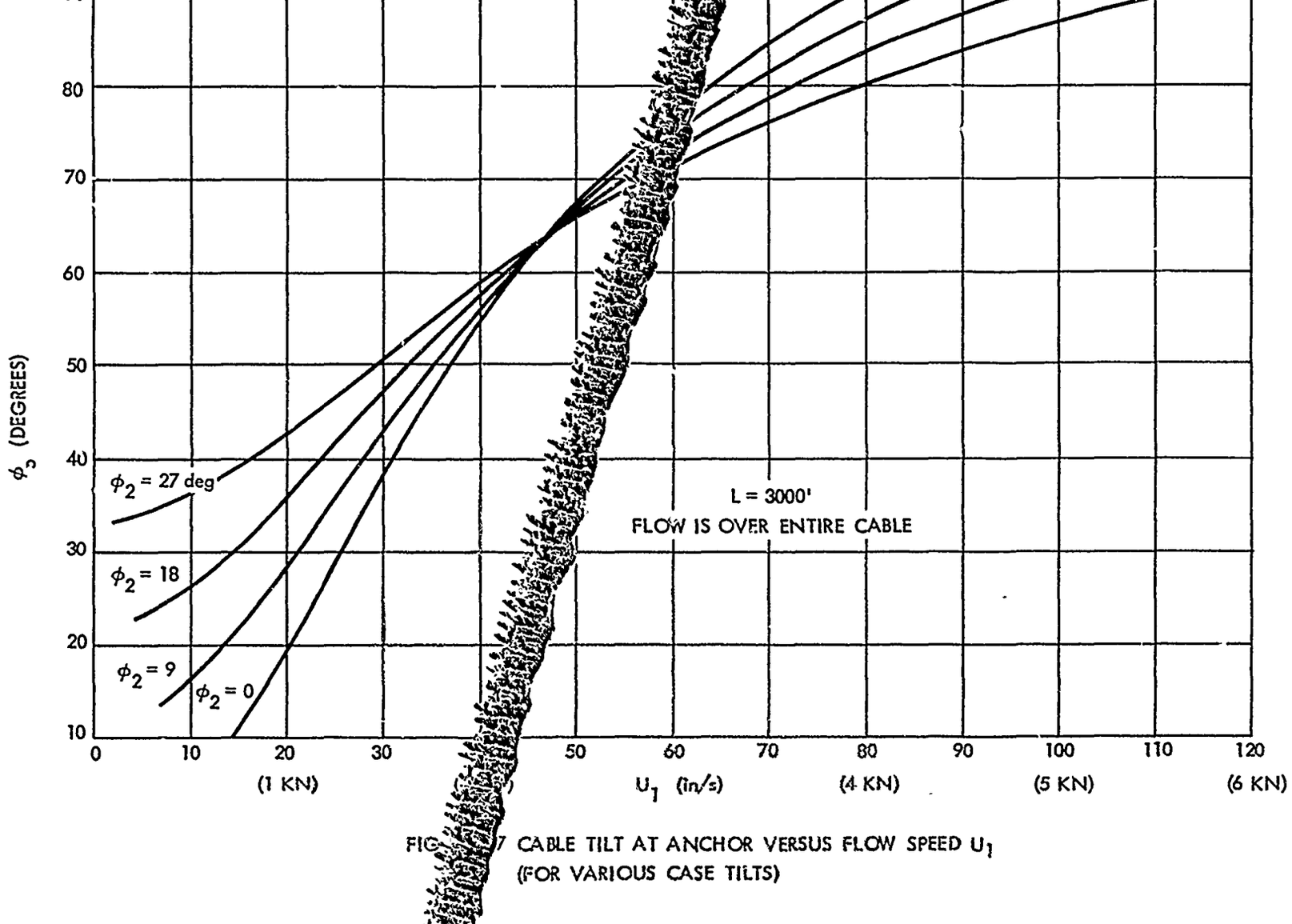

FIG. 7 CABLE TILT AT ANCHOR VERSUS FLOW SPEED U_1
(FOR VARIOUS CASE TILTS)

REFERENCES

1a. Bertaux, H. O. and Walden, R. G., "Engineering Program to Improve Reliability of Deep Sea Moorings", WHOI, Contrib. #2484 Marine Technical Society, 6th Annual Meeting, (Preprints), 29 June - 1 Jul 1970

1b. Bertaux, H. O., "Design of Deep Sea Mooring Lines", WHOI, Marine Technical Society Journal, Vol 4, #3, May/Jun 1970

2. Christoph, W., "Investigation of the Noise Spectrum of Moored Mine Cables and Mine Cases X A-4", NOL Report, 12 Jul 1957

3. Dale, J. R. and Holler, R. A., "Vortex Wakes from Flexible Circular Cylinders at Low Reynolds No's", NADC Report #AE 7011, 7 Jul 1970; Report: 1-22J974 (Copy 1) NOL Library, (Cleared by CNM), 13 May 1969

4. Dale, J. R., McCandless, J. M. and Holler, R. A., "Water Drag Effects of Flow Induced Cable Vibrations", Manuscript, 29 May 1969; ASME Winter Annual Meeting, New York, 1-5 Dec 1968; NADC Report #AE 6731, 13 Sep 1967

5. Dale, J. R. and Holler, R. A., "Spurious Signals from Cable Suspended Sonar Systems", Journal of Hydronautics, pp 83-87, Vol 3, #2, Apr 1969

6. Dale, J. R., McCandless, J. M. and Holler, R. A., "Dynamic [illegible] of a Suspended Hydrophone to Wave and Flow Effects", [illegible] Engineering Conference, 6-9 May 1968, Manuscript read[illegible]

7. Dale, J. R., Menzer, [illegible] and McCandless, J. M., "Dynamic Characteristics of Underwa[illegible]les - Flow-induced Transverse Vibrations", NADC Report #AE 6[illegible] Sep 1966

8. Dale, J. R. and Holler, R. A., "Sec[illegible] Vortex Generation in the Near Wake of Circular Cylinders", Jou[illegible] Hydronautics, Vol 4, #1, pp 10-15, Jan 1970

9. Goeller, J. E., "Case Motion Due to Vortex Shedd[illegible]vate Communication, June, 1971)

10. Goeller, J. E., "Analytical and Experimental Study of the Dynamic Response of Cable Systems", NOLTR 70-38, 23 Feb 1970

11. Goldstein, S., "Mod Dev. in Fluid Dynamics", pp 563-570, 24, V.I. (1938)

12. Kohlrausch, W., Wied. Ann. V. XIII p 545 (1881)

13. Koopman, "Vortex Wakes of Vibrating Cylinders at Low Reynolds' No's", USNRL, J. Fluid Mech., Vol 28, pp 501-512, (1967)

14. Lamb, H., "Hydrodynamics", Dover (1945)
    a) p 224 Art. 156 (Kármán Vortex Street)
    b) p 571 Art. 323 (Viscosity)

15. Martin, Wayne D., "Tension & Geometry of a Single Point Moored Surface Buoy System, A Complete Program Study", WHOI, Ref Na 68-79, Dec 1968

16. McMillen, J. H. et al "Memorandum on Cable Noise", 24 Aug 1950 (NOL)
    I. Spectrum of vortex f's and cable harmonics
    II. Est. of max. side force
    III. Est. of ampl. of vib.
    IV. Acoustic press waves

17. Meier-Windhorst, "Flutter Vibration of Cylinders in a Uniform Flow",
    1) Munich Tech. Hoch., Hydraul. Inst. Mitt., Vol 9, pp 1-29, (1939)
    2) Also: Translation by E. N. Labouvic and A. Border, #333, Jul 1966, DTMB

18. Morse, P. M., "Vibration & Sound", McGraw-Hill, p 235, 1st ed., (1936)

19. Rayleigh, Phil Mag. V. VII, p 161 (1879)

20. Rayleigh, "Theory of Sound": a) V.I, p 81, p 232, Dover (1945); b) V. II, p 412 Dover (1945)

21. Ruedy, R., "Vibrations of Power Lines in a Steady Wind", Canadian Jour. Res., Oct 1935

22. Sallet, D. W., "On the Prediction of Flutter Forces" (private communication) NOLTN 9575 March 1972

23. Sallet, D. W., "On the Self-excited Vibrations of a Circular Cylinder in Uniform Flow"; 1) Shock & Vib. Bulletin #40, Part 3, Dec 1969 2) TN 8491, (NOL files) 26 Jun 1969

24. Sallet, D. W., 1) NOLTR 67-60, 3 Mar 1968 2) 39th Shock & Vib. Sympos., 22-24 Oct 1968 3) Shock & Vib. Bulletin, 39, Part 4, pp 261-273, Apr 1969 4) Also see, with J. Berezow, NOLTR 72-6 "Suppression of Flow-Induced Vibrations by Means of Body Surface Modifications", & Shock & Vib. Bull. #42, Part 4 - Jan 1972

25. Sallet, D. W., "On the Spacing of Karman Vortices", 1) Journal Appl. Mech. (Transact. of the ASME) V. 36, (E) #2, pp 370-372, Jun 1969 2) TN 7746, NOL Files, 31 Aug 1967

26. Sallet, D. W., "A Method of Stabilizing Cylinders in Fluid Flow"; 1) Jour. of Hydronautics, Vol 4, #1, pp 40-45, Jan 1970 2) An Abbreviated Form of NOLTR 67-128

27. Strouhal, Wied. Ann. V. V, p 216 (1878)

28. Thom, A., "Experiments on a Cylinder Oscillating in a Stream of Water", Phil. mag., V. 12, p 490 (1931)

29. Toeber, G. H. (& Goldschmidt) "Unsteady Flow and Wake Around Cylinders", J. of Basic Eng., Trans. of ASME, (Contains refs) Sep 1969

30. Urick, R. J., "Flutter Noise in Suspended Hydrophones" CIC Report No. 128, 27 Oct 1960; paper read at 60th meeting of the Acoustical Society of America, San Francisco

31. Some Related References:

a) Schindel, L. H., "Separated Flow About Lifting Bodies", MIT Tech. Report 80, MIT DSR 9221, Sep 1963

b) Bryson, A. E., "Symmetric Vortex Separation on Circular Cylinders and Cones", Jour. of Appl. Mech., Trans. ASME, paper #59-APM-13, Jun 1959

c) Sarpkaya Turgut, "Lift, Drag, and Added-mass Coefficients for a Circular Cylinder Immersed in a Time-dependent Flow", Jour. of Appl. Mech., Trans. of ASME, paper #62-WA-61, also paper #62-WA-62, Nov 1962

d) Fromm, J. E. and Harlow, F. H., "Numerical Solution of the Problem of Vortex Street Development", Physics of Fluids, Vol 6, #7, pp 975-982, Jul 1965

e) Rimon, Yermiyahu, "Numerical Solution of the Incompressible Time Dependent Viscous Flow Past a Thin Oblate Spheroid", Appl. Math Lab. NSRDC Tech. Note AML-24-68, Jul 1968