AD-756 933

WIDEBAND COMMAND AND CONTROL MODEM (WAVEFORM AND MODEM CONCEPTUAL DESIGN STUDY)

James A. Kivett, et al

Hughes Aircraft Company

Prepared for:

Rome Air Development Center
Defense Advanced Research Projects Agency

December 1972

DISTRIBUTED BY:

NTIS
National Technical Information Service
U. S. DEPARTMENT OF COMMERCE
5285 Port Royal Road, Springfield Va. 22151

UNCLASSIFIED
Security Classification

DOCUMENT CONTROL DATA - R & D

(Security classification of title, body of abstract and indexing annotation must be entered when the overall report is classified)

1. ORIGINATING ACTIVITY *(Corporate author)*

Hughes Aircraft Company
Ground Systems Group
Fullerton, CA 92634

2a. REPORT SECURITY CLASSIFICATION
Unclassified

2b. GROUP

3. REPORT TITLE

Wideband Command and Control Modem
(Waveform and Modem Conceptual Design Study)

4. DESCRIPTIVE NOTES *(Type of report and inclusive dates)*

Final Technical Report 16 Jun 1972 to 16 Dec 1972

5. AUTHOR(S) *(First name, middle initial, last name)*

James A. Kivett Tonis Tilk
Gene F. Bowers Willard E. White

6. REPORT DATE
Dec 1972

7a. TOTAL NO. OF PAGES
222

7b. NO. OF REFS
1

8a. CONTRACT OR GRANT NO.
F30602-72-C-0500

b. PROJECT NO.
2154

c.

d.

9a. ORIGINATOR'S REPORT NUMBER(S)
FR-73-14-158

9b. OTHER REPORT NO(S) *(Any other numbers that may be assigned this report)*
RADC-TR-73-12

10. DISTRIBUTION STATEMENT

Approved for public release; distribution unlimited.

11. SUPPLEMENTARY NOTES

Monitored by:
RADC/DCRC
Griffiss AFB NY 13441

12. SPONSORING MILITARY ACTIVITY

Advanced Research Projects Agency
Washington, DC 20301

13. ABSTRACT

This final technical report describes in precise terms the results of the study phase of the Wideband Command and Control Modem (WCCM) program. The study phase was devoted to the performance analysis and conceptual design of a waveform and modem which will provide a jamming-resistant command and control data link for unmanned, remote, multiple, and airborne vehicle control and position location. The report is organized by two-page topics to facilitate rapid access and thematic comprehension.

Direct sequence, 60 Mpps keying rate, spread-spectrum signalling using binary continuous phase shift modulation is recommended for both forward and return link communication between the ground control station (GCS) and the remotely controlled vehicles (RCVs). The forward link employs a single channel, time division multiplexed, continuous transmission for communication of command messages to the RCVs. A multichannel hybrid FDMA/TDMA return link waveform design is recommended for minimum complexity of the RCV modem and maximum flexibility in configuring the ground station for a wide range of operational requirements. The selected waveform designs, coupled with extensive use of digital signal processing techniques, result in cost-effective modem designs for the RCV and the GCS.

DD FORM 1 NOV 65 1473

UNCLASSIFIED
Security Classification

UNCLASSIFIED

Security Classification

14. KEY WORDS	LINK A ROLE	LINK A WT	LINK B ROLE	LINK B WT	LINK C ROLE	LINK C WT
Anti-jam Communication						
Digital Signal Processing						
Frequency Division Multiple Access						
Ground/Air Communication						
Modem						
Modulation Techniques						
Multiple Access Communication						
Remotely Controlled Vehicles						
Spread Spectrum Communication						
Time Division Multiple Access						
Waveform Design						

UNCLASSIFIED

Security Classification

WIDEBAND COMMAND AND CONTROL MODEM
(WAVEFORM AND MODEM CONCEPTUAL DESIGN STUDY)

James A. Kivett
Gene F. Bowers

Contractor: Hughes Aircraft Company
Contract Number: F30602-72-C-0500
Effective Date of the Contract: 16 June 1972
Contract Expiration Date: 27 December 1972
Amount of Contract: $68,097.00
Program Code Number: 2G10

Principal Investigator: J. A. Kivett
Phone: 714 871-3252 Ext. 2886

Project Engineer: H. J. Bush
Phone: 315 330-4935

Approved for public release;
distribution unlimited.

This research was supported by the Defense Advanced Research Projects Agency of the Department of Defense and was monitored by H. J. Bush, RADC (DCRC), GAFB, NY 13441 under contract F30602-72-C-0500.

ic

PUBLICATION REVIEW

This technical report has been reviewed and is approved

RADC Project Engineer

CONTENTS

SECTION S – INTRODUCTION AND SUMMARY

Objectives and Scope of the WCCM Study S-0
Summary of Specified WCCM Performance Requirements S-2
Summary of Recommended Waveform Design S-4
Overview of System Configuration for RCV Command, Control, and Position Location S-6
Summary of Recommended Modem Designs S-8
Cost Estimates and Physical Configuration for the Production Model of the RCV Modem S-10
DoD Implications of the Study Results S-12
Recommendations for Further Effort S-14

SECTION 1 – ANALYSIS OF REQUIREMENTS AND TECHNICAL GUIDELINES

Summary of Specified Performance Requirements for the Wideband Command and Control Modem 1-0
Analysis of Forward Link and RCV Modem Performance Requirements 1-2
Analysis of Return Link GCS Modem Performance Requirements 1-4

SECTION 2 – SELECTION OF NETWORK CONFIGURATION AND WAVEFORM PARAMETERS

Network Configuration Selection and Trade-Offs

Combined Versus Separate Forward and Return Links 2-0
Selection of Forward Link Transmission Scheme 2-2
Selection of Return Link Transmission Scheme 2-4
Selection of Return Link Channel Parameters 2-6
Comparison of Candidate Spread-Spectrum Waveforms 2-8
Trade-Off Between Partial and Full Occupancy Modulation Techniques 2-10

Waveform Parameter Selection and Trade-Offs

Evaluating Spread-Spectrum Signal Types 2-12
Selecting the Modulating Waveform 2-14
Performance Comparison Between Costas Loop and Gated Carrier Phase Tracking 2-16
Implementation Comparisons Between Costas Loop and Gated Carrier Phase Tracking 2-18
Forward Link Message Timing Structure Design Considerations 2-20
Return Link Message Timing Structure Design Considerations 2-22
Selecting the Pseudo Noise Sequence Length 2-24
Selection of Modular Processing Gain Increments 2-26
Selection of Error Control Approach 2-28
Linear Encoding and Decoding 2-30

Modem Design Feature Selection and Trade-Offs

Single Versus Dual RCV Psuedo Noise Generator Trade-Off 2-32
Selecting the RCV Modem Forward-Link Signal Acquisition/Reacquisition Approach 2-34
Selecting the GCS Burst TDMA Return Link Signal Acquisition Approach 2-36

CONTENTS (Continued)

Review of Current State-of-the-Art Parallel Correlation Hardware Technology 2-38
Selecting the Approach to Time Difference Measurement for Ranging at the GCS 2-40
Ranging and Position Location Accuracy Evaluation 2-42
Selecting the Approach to TDMA Return Link Guard Time Management 2-44
Determining the Optimum Approach to Analog/Digital Quantization 2-46

SECTION 3 – WAVEFORM AND MODEM DESIGN CHARACTERISTICS

Overview of WCCM Design

Key Features of the Waveform and Modem Design 3-0
System Configuration for RCV Command, Control, and Position Location 3-2

Forward Link Waveform and Modem Designs

Forward Link Waveform Characteristics 3-4
Full-Capacity Forward Link Message Timing Structure 3-6
Forward Link Message Timing Structures for Reduced RCV Deployment Levels 3-8
Key Features of the GCS Modulator 3-10
Key Features of the RCV Demodulator 3-12

Return Link Waveform and Modem Designs

Return Link Waveform Characteristics 3-14
Return Link TDMA Channel Message Timing Structures 3-16
Message Timing Structures for the Continuous Transmission Return Link Channel 3-18
Key Features of the RCV Modulator 3-20
Key Features of the GCS Demodulator 3-22

SECTION 4 – FUNCTIONAL DESCRIPTION OF THE WCCM TERMINALS

Ground Control Station Terminal: Transmit Section

Overview of the GCS Modulator 4-0
Pseudo Noise Code and Basic Timing Generator 4-2
GCS Transmit Multiplexer 4-4
Binary Continuous Phase Shift Modulator 4-6
GCS Transmit Radio Frequency Assembly 4-8

Remotely Controlled Vehicle Terminal: Receive Section

Overview of the RCV Demodulator 4-10
Description of Receive RF Assembly 4-12
Description of 2 CPSM Demodulator 4-14
Description of Carrier Tracking Loop 4-18
Pseudo Noise Code Tracking 4-20
Description of the Digital Data Demodulator 4-22
Pseudo Noise Clock Control Function 4-24
RCV Signal Acquisition and Reacquisition Technique 4-26
Description of Command Decoder Logic 4-28

CONTENTS (Continued)

Remotely Controlled Vehicle Terminal: Transmit Section

Overview of the RCV Modulator 4-30
Multiplexer and Error Encoder 4-32
Transmit Timing and Mode Control Circuitry 4-34
Description of Transmit RF Assembly 4-36

Ground Control Station Terminal: Receive Station

Overview of GCS Demodulator 4-38
GCS RF Assembly 4-40
Channel Demodulator and Message Decoder Assembly 4-42
Timing and Control Module Functions/General Description and Continuous Mode Operation 4-44
Timing and Control Module Functions in TDMA Mode Operation 4-46

SECTION 5 – DESIGN ALTERNATIVES AND GROWTH FEATURES

Narrowband Interference Rejection by Automatic Tracking Notch Filters 5-0
ECCM Benefit of Error-Correction Encoding on the Forward Link 5-2
ECCM Benefit of Error-Correction Encoding on the Return Link 5-4

SECTION 6 – RECOMMENDED EXPERIMENTAL MODEL CONFIGURATION

Scope and Rationale

Objectives and Scope of the Experimental Model Phase 6-0
Overall Rationale for the Design of the Experimental Model System 6-2

Recommended Configuration of the Experimental Model System

Experimental Model System Configuration 6-4
Experimental Model Master Ground Control Station Configuration 6-6
Experimental Model RCV Terminal Configuration 6-8
Experimental Model Ground Slave Station Configuration 6-10
Capabilities of the Master Ground Control Station Test Unit 6-12
Capabilities of the RCV Test Unit 6-14
Capabilities of the Load Simulator 6-16
Physical Configuration of the Ground Station Terminals 6-18
Description of the Ground Control Station Modular Control Units 6-20
Physical Configuration of the Experimental RCV Terminal 6-22

RF Equipment Recommendations for the Experimental Model System

Recommended Frequency Band 6-24
Preliminary Design of RF Equipment 6-26

APPENDIX A – BINARY CONTINUOUS PHASE SHIFT MODULATION (2 CPSM) A-0

APPENDIX B – TAPPED DELAY LINE PREAMBLE ACQUISITION TECHNIQUES

Classical Concept of Preamble Acquisition B-0
Understanding of the Baseband Preamble Acquisition Technique B-2

APPENDIX C – RCV TRANSMITTER AMPLIFIER HARDWARE SURVEY AND EVALUATION C-0

CONTENTS (Continued)

APPENDIX D – EVALUATION OF PERFORMANCE IMPROVEMENT RESULTING FROM NARROWBAND INTERFERENCE REDUCING NOTCH FILTERS D-0

GLOSSARY G-1

SECTION S
INTRODUCTION AND SUMMARY

Objectives and Scope of the WCCM Study S-0
Summary of Specified WCCM Performance Requirements S-2
Summary of Recommended Waveform Design S-4
Overview of System Configuration for RCV Command, Control, and Position Location S-6
Summary of Recommended Modem Designs S-8
Cost Estimates and Physical Configuration for the Production Model of the RCV Modem S-10
DoD Implications of the Study Results S-12
Recommendations for Further Effort S-14

OBJECTIVES AND SCOPE OF THE WCCM STUDY

The objectives and scope of the WCCM Study Phase emphasize the requirement for selection of practical and cost-effective waveform and modem design concepts for achievement of a jamming-resistant command and control data link for Remotely Controlled Vehicles.

The total Wideband Command and Control Modem (WCCM) program consists of two distinct phases. The first or study-phase of the program is devoted to the performance analyses and conceptual (block diagram level) design of the waveform and modems employing that waveform to provide a jamming-resistant command and control data link for unmanned, remote, multiple airborne vehicle control and position location. The second or experimental model phase of the overall program is to be devoted to the detailed design and fabrication of experimental models of the equipment and associated test units which will permit demonstration and Government evaluation of the full performance capabilities of the design. As an element of the Final Report of the WCCM Study Phase, this topic will concentrate on the objectives and scope of the first phase of the total program.

Throughout the program, there is an emphasis on the practicality and cost-effectiveness of the design approach. This emphasis is clearly evident in the statements of the study phase objectives and scope, which appear in the presentations on the facing page. Practicality is understood to mean that the selected design approach must be reducible to deliverable experimental models within one year after design approach approval and that the approach can be implemented with currently available state-of-the-art devices or components. Research or development of new techniques would entail too much technical and schedule risk in a one-year equipment development effort. Practicality also refers to a design which can be implemented within suitable physical dimensions, weight and power drain characteristics for installation in unmanned aircraft, in the case of the RCV modems.

The cost-effectiveness objectives are clearly indicated by the cost goal of less than $10,000 per RCV modem in production quantities. While less explicitly stated, cost-effectiveness is also an important consideration in the selection of the design approach for the ground station modem. Here the cost-effectiveness objectives will be best served by careful choice of equipment modularity characteristics to permit selective implementation of the particular magnitude of ground station capabilities which are required to service a given class of field deployment requirements.

The summary of the scope of the WCCM Study as presented on the facing page lists the key factors or study considerations and constraints which were defined as applicable to each of the major areas of concern or investigation during the study. The quantitative listing of specified WCCM performance requirements, as well as descriptions of the approach and methodology used in performing the study and summary of study results, are contained in the topics immediately following in this section.

OBJECTIVES OF THE WCCM WAVEFORM AND MODEM CONCEPTUAL DESIGN STUDY

- Design a waveform and develop conceptual designs of modems employing that waveform to permit achievement of a practical and cost-effective implementation of a jamming-resistant command and control data link utilizing spread-spectrum modulation techniques for unmanned, remote, multiple airborne vehicle control and position location capabilities.

SCOPE OF THE WCCM STUDY

- System Employment
  - Range limited to line-of-sight operation without use of relay aircraft
  - All information required to control RCV part of communications problem
  - Detailed consideration of sensor data interfaces and antenna problems excluded
- Overall Performance
  - Selection of spread-spectrum modulation techniques to achieve required AJ protection and position location by ranging
  - AJ protection against CW, swept CW, pulsed and Gaussian noise sources; antispoof capability desired
- Detailed Performance
  - Data rate (including digitized downlink video) and updating requirements
  - Guard time techniques to overcome range differentials
  - Error protection techniques
  - Maximum, adaptable AJ protection and multiple access capability within state-of-the-art and propagation constraints
  - Uplinks and downlinks may be nonsymmetrical
- Cost and Implementation
  - Implementable within 1 year after design approval with current state-of-the-art components; no R&D of new techniques
  - Cost-effective (goal $10K/RCV modem in production) implementation in minimal physical dimensions, lightweight and low power drain.
  - Depth of design detail sufficient to permit cost estimates

SUMMARY OF SPECIFIED WCCM PERFORMANCE REQUIREMENTS

The key challenges in the selection of the WCCM waveform design and modem concepts were to satisfy the detailed performance requirements while retaining the minimum RCV modem complexity as required to achieve cost objectives and to satisfy the physical characteristics objectives within current state-of-the-art.

System Performance Requirements – The principal performance objective of the WCCM development effort is the achievement of a cost-effective approach to ECM-resistant communications for command, control, and position location of up to 25 RCVs from a single ground control facility. In order to accommodate up to 25 RCVs dispersed over a 250-nmi range, the capability for RCV downlink multiple access to the single control facility is particularly important. Thus, development of the optimum waveform design required adequate consideration of the network control and coordination aspects of the communication system, as well as design for a reliable and efficient communication link. For RCV deployments in regions of difficult terrain, line-of-sight communications at the specified 250-nmi range may require careful ground antenna site selection to achieve antenna heights compatible with this capability. The variability of propagation time of signals from RCVs distributed over the 250-nmi range requires system accommodation of guard times of approximately 3 msec, or a design approach to control RCV transmission times to reduce the guard time in proportion to the distance between the two ground stations required for RCV position location.

Position Location Implications for System Design – The requirement for RCV position location accuracy to within 100 feet does not impose an additional burden on the bandwidth requirements of the WCCM waveform. The nominal 250-ns waveform time resolution required results in keying rate requirement of only 4 Mpps for ranging. This is well below the 50 Mpps minimum keying rate required on the uplink at a processing gain of 30 dB. Since only a 500-mile round trip range ambiguity need be accommodated, the waveform code length required is not a significant factor.

The major RCV communication system impact of the position location requirement is the need for at least two ground control facility receivers located at some distance from each other to permit position computation from several range measurements and RCV altitude reports. However, availability of this second receiver can enhance the ECM invulnerability of the system

Command and Status/Response Communications Requirements – The requirement for 2,000 bps per RCV command and status/response data results in a total information rate of 50,000 bps for this purpose. At the specified minimum 30-dB uplink processing gain, a transmission bandwidth of greater than 50 MHz is required in order to accommodate addressing and error-control coding overhead. The requirement for a 10^{-5} undetected error rate is indicative of the critical importance of reliable command and response data communication for control and successful retrieval of the unmanned vehicle. Maximum practically achievable processing gain is particularly important in the RCV uplink receiver in view of the greater potential range advantage of a jammer during the objective phase of the mission in opposition territory. Development of a simple, cost-effective means of achieving modularly adaptive processing gain to provide higher processing gain when fewer RCVs are deployed presents waveform design challenge.

Multiple Access Requirements – The multiple access capability of the WCCM is particularly important in the downlink where 25 status/response data sources and 5 wideband digitized video sources scattered over a wide

range require access to a single downlink receiver in the ground control station. The range spread of the RCV transmitters from 1 to 250 nmi results in a ground receiver dynamic range requirement of approximately 50 dB. The approach to implementation of the downlink multiple-access capability must be chosen with adequate regard for RCV transmitter complexity resulting from transmit timing coordination and other signal processing implications.

Video Transmission – The 100-MHz information bandwidth required for simultaneous downlink transmission of five 20-Mbps digitized video signals establishes an upper limit on required WCCM data rate performance capability. Fortunately, the additional bandwidth above this information bandwidth for error-control and processing gain is less stringent than that for command and status/response data. The requirement for only 10^{-3} undetected error rate is consistent with the inherent redundancy in uncompressed video. Additionally, the downlink antijamming threat is less severe than that for the uplink, resulting in less need for downlink processing gain.

SUMMARY OF SPECIFIED WCCM PERFORMANCE REQUIREMENTS

Specified Performance Parameter	Design Requirement
Overall System/Deployment:	
• Basic Function	Command and control of up to 25 RCVs from a single ground terminal
• Communications Range	Up to 250 nmi line-of-sight (use of relay aircraft not to be considered)
• Position Location Accuracy	100 feet
• Link Configuration	Uplink for continuous RCV C&C; downlink for status/command response reporting and 20 Mbps digitized video from each of 5 RCVs
• Physical Considerations	Minimal physical dimensions, low power drain, lightweight
• Types of Components for Implementation	State-of-the-art components but no R&D of new techniques; implementable within 1 year after design approval
• Cost Considerations	Emphasis to be on RCV modem simplicity; goal is $10K/RCV modem in production
Uplink	
• Throughput Data Rate	2,000 bps/RCV with a satisfactory number of command periods per second
• Spread-Spectrum Processing Gain	30 dB minimum; adaptable to provide additional processing gain if < 25 RCVs are used
Downlink	
• Throughput Data Rate	2,000 bps/RCV with number of response periods per second to be determined by study; 20 Mbps of digitized video from each of up to RCVs
• Bit Error Rate	10^{-5} for response data; 10^{-3} for video data
• Spread-Spectrum Processing Gain	Maximum practical; to be determined by study

SUMMARY OF RECOMMENDED WAVEFORM DESIGN

The recommended wideband command and control modem waveform designs have been developed for efficient and effective multimode, ECM resistant, two-way communication between a ground control station (GCS) and a number of remotely controlled vehicles (RCVs). The resultant designs are fully compliant with the specified performance requirements and objectives and with a number of additional derived performance characteristics to enhance system cost-effectiveness for use in a wide variety of operational situations and RCV deployment levels.

Waveform Design Rationale – The forward-link waveform design developed in this study has resulted from emphasis on simplicity – yet operational effectiveness – of the RCV modem. Return link waveform and ground control station modem designs have stressed flexibility and modular design for cost-effectively meeting a wide range of RCV deployment levels and mission types. Thus, the recommended design is consistent with the objectives of relatively low-cost RCVs, when produced in quantity, while permitting each deployed ground control station configuration to be optimized for specific operational requirements. Included are many design features which are aimed at a high degree of communication reliability for RCV operation worldwide over difficult terrain while also enhancing the ECM effectiveness of the system.

A gated carrier waveform is employed wherein every sixth PN code keying interval is unmodulated by the transmitted data. This arrangement improves modem signal tracking performance by permitting modem signal tracking circuit optimization for link dynamics, rather than being tied to a number of modular data rates which the design accommodates. A 60-Mpps keying rate pseudo noise code sequence is employed for anti-jamming spectrum-spreading. This sequence is modulated at a 300 MHz IF by a binary continuous phase-shift modulation (2 CPSM) to produce a "noise-like," constant-amplitude waveform.

The waveform designs for both the forward link and the TDMA channel on the return link accommodate modular utilization of additional processing gain for enhanced antijamming protection when fewer than 25 RCVs are deployed.

A message-oriented approach to transfer of command and telemetry data between the GCS and RCVs includes provision of positive RCV acknowledgement of successful forward link command receipt to the GCS via the return link. This feature, combined with capability for variable update rates for individual RCVs permits use of retransmission techniques to further enhance communication reliability in a tactical ECM environment. As a result, additional effective processing gain is realized by the system. Incorporation of the measurement of data quality in both RCV and GCS modems produces higher performance signal tracking and reacquisition. Further, use of these quality measures provides a very low probability of false message acceptance without employment of an excessive degree of error-detection coding redundancy in the waveforms.

Forward-Link Waveform Design Highlights – The forward-link waveform design for GCS-to-RCV communication of command and control data employs a 60-MHz channel bandwidth, continuous transmission, addressed time division multiplexed waveform. This forward-link waveform accommodates variable rate transmission of up to 2400 bps command data rates to each of 25 RCVs with 30 dB of spectrum-spreading processing gain, at update rates of 30 commands per second per RCV. The waveform and modems accommodate transmission and processing of link commands which provide for GCS control of

RCV transmit frequency, return-link transmission mode, antenna pointing, and return-link burst transmission initiate time.

The continuous forward link transmission from the GCS is continuously received by all deployed RCVs. In this manner, all forward-link signal energy is used by each RCV for reliable signal tracking at low signal-to-noise ratios and for receiver reacquisition of the signal when necessary. Provision for command message addressing to individual RCVs provides for increased flexibility of command and control rates to each of the RCVs in accordance with the rate dictated by the mission phase. Decreased ECM vulnerability results from the use of addressed commands in the continuously transmitted signal, and opposition exploitability of signals by relating forward- and return-link traffic is significantly hampered.

Return Link Design Highlights – Up to six 60-MHz bandwidth channels may be used in the hybrid frequency division multiple access/time division multiple access (FDMA/TDMA) return link. One TDMA burst transmission channel provides for GCS reception of up to 2400 bps of status/response telemetry data from each of up to 25 RCVs at 27 dB of processing gain. A nominal guard time of 300 μs between bursts accommodates differentials in time-of-arrival at the displaced (up to 50 miles) ground receivers required for RCV position location capability in the system. Simultaneously, from one to five 60-MHz-bandwidth, continuous transmission return-link channels may be employed for transmission of 20 megabit per second video or sensor data and 2400-bps telemetry from each of one to five RCVs, respectively. In this video and telemetry mode, telemetry data is multiplexed at the spread-spectrum chip level with the video data to eliminate any requirement for RCV storage, or buffering, of digitized video data.

32138-1

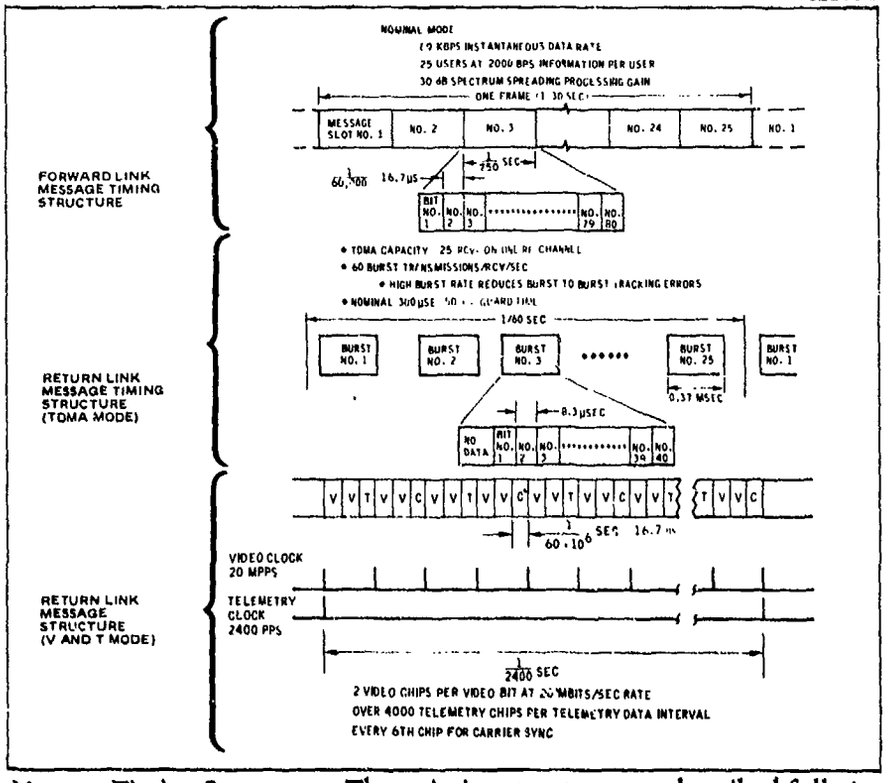

Message Timing Structures. These timing structures are described fully in Section 3 of this report.

OVERVIEW OF SYSTEM CONFIGURATION FOR RCV COMMAND, CONTROL, AND POSITION LOCATION

The waveform and modem designs developed in the conduct of this study provide for optional inclusion of RCV position location capability in the command and control system by providing a second ground station. The second station (termed the Ground Slave Station) incorporates a demodulator section of the RCV modem to receive range measurement timing coordination information by reception of forward link signals transmitted by the Master Ground Control Station.

When the forward link transmit and return link receive PN code timing difference measurement capabilities of the GCS Modem are to be employed for RCV position location, two ground stations are required. The Master Ground Control Station (MGCS) will house the full mission control personnel, remote control consoles, and data processing equipment required for RCV command and control. Additionally, a receive-only Ground Slave Station will be required to process return link signals for RCV ranging measurements. As shown, the master station can measure the round trip time differences between its continuous forward link PN code transmission and each of the unique RCV return link PN code sequences which are synchronized to it by virtue of the RCV modem design utilization of locked receive and transmit PN code generators. In this manner it can perform two-way ranging between the master station and each of the 25 RCVs.

At a remote Ground Slave Station (GSS) displaced at range R_S from the master station, PN code timing differences can also be measured to determine the range $R_1 + R_2$ from master-to-RCV-to slave for each of the RCV's. Transmission of these measurements by external data link to the master station provides the master with sufficient data to calculate the position of each RCV, if RCV altitude data is provided via telemetry on the return link.

Measurement of PN code timing differences at the GSS requires that it receive code timing synchronization information from the MGCS. This can be most simply achieved by including an RCV receive RF assembly and RCV Modem demodulator assembly in the GSS. These are shown in the second figure as the Command Receiver and Command Demodulator in the GSS. Thus, master timing synchronization of the slave from the master is achieved by GSS reception of the same continuous forward link transmission which is transmitted to the RCVs by the MGCS.

Mini-computers included in each ground station can perform ranging computations for each RCV from the PN coding timing differences supplied by the modems through the computer input/output buffers. The results of the ranging computations at the slave can then be transmitted from its mini-computer over a low speed external data link to the master station mini-computer for RCV position location computation.

As a result, in a two ground station system incorporating position location capabilities, additional WCCM modules are required at the GSS beyond the normal duplicate of the multichannel Demodulator section of the GCS Modem. These are the command receiver and demodulator modules shown. No increase in MGCS WCCM equipment is required for inclusion of the two-station position location capability. In both the master and the slave ground stations, the number of GCS Modem modular Channel Demodulator and Message Decoder Assemblies required will depend upon the number of FDM RF channels employed in the system. The number of Timing and Control Modules employed in each station's GCS modem will depend upon the maximum number of RCVs which the stations will be required to accommodate.

32138-10

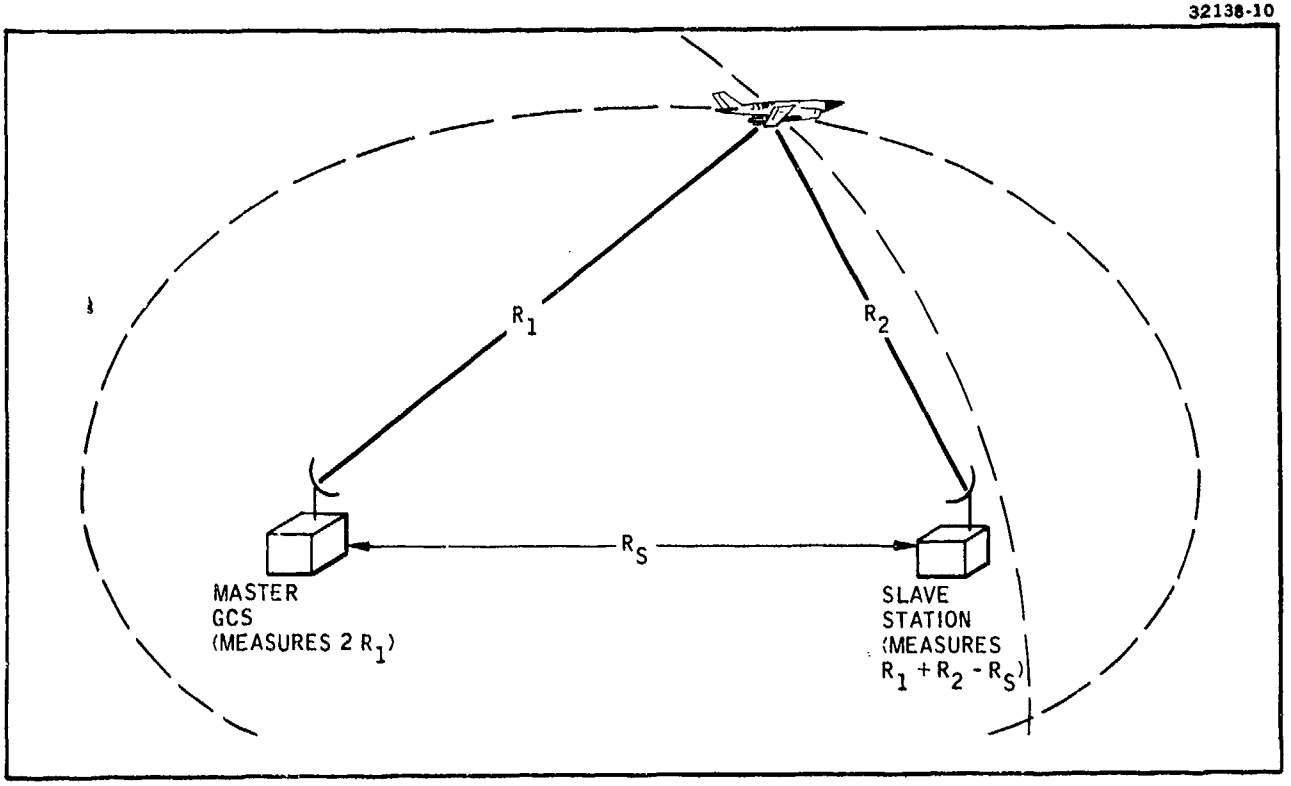

Figure A. Two-station Concept for RCV Position Location.

32138-2

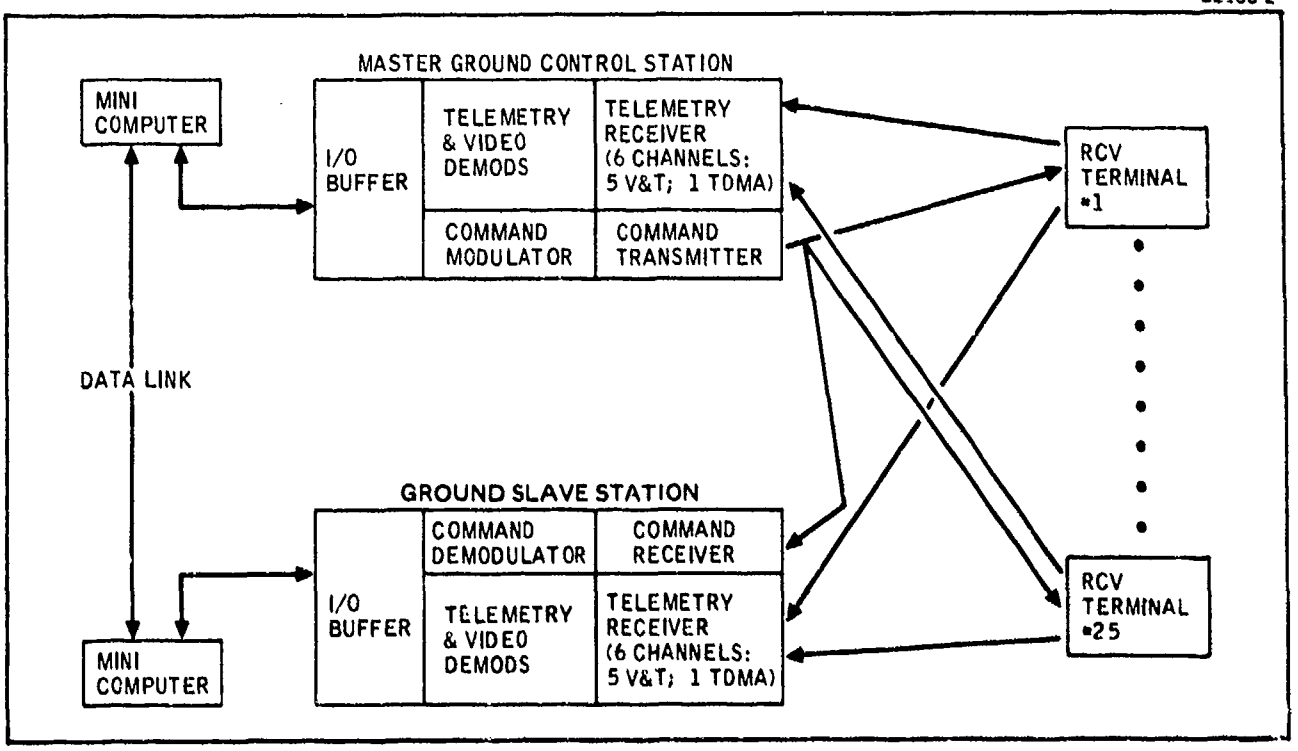

Figure B. WCCM System Maximum Capacity Configuration for Command, Control and Position Location of 25 RCVs. The Ground Slave Station includes a forward link command receiver and command demodulator identical to those in the RCV to accommodate inter-station timing transfer for range measurement.

SUMMARY OF RECOMMENDED MODEM DESIGNS

A high degree of modem performance is achieved at low cost by maximum utilization of digital signal processing techniques. A modular design approach to implementation of the Ground Control Station modem permits the modem configuration to be cost-effectively matched to the operational user requirements for the ground station in which it is employed.

Key Features of the GCS Modulator for the Forward Link – The modulator section of the Ground Control Station modem is straight forward. It transforms the sequence of forward link RCV command message to a continuous 60-Mpps keying rate, spread-spectrum, constant-amplitude signal at a 300-MHz IF. Forward link command messages for transmission to the deployed RCVs originate at a ground station data source. Each of these messages is addressed to a specific RCV by that data source. The modulator section of the GCS modem sequentially time-division-multiplexes each of these messages onto the continuous forward link data stream. Each message is block-encoded with error detection parity bits by the modem, and the resultant parity bits are appended to the information portion of the command message. Spread-spectrum PN encoding of the message data at a 60-Mpps keying rate is then followed by binary continuous phase shift modulation (2 CPSM) of the PN code message bit stream. The modulator output to the external GCS transmit RF assembly is a constant amplitude 2 CPSM signal at a 300-MHz IF.

Key Features of the RCV Demodulator for the Forward Link – Simplicity in the design of the RCV Modem is essential to cost-effective deployment and application of remotely controlled vehicles in future military operations. Since spread-spectrum, anti-jamming signal demodulation is a more complex process than modulation of such signals, this is particularly true of the Demodulator section of the RCV Modem. Employment of a continuously transmitted forward link signal for command transmission to the RCVs aids simplification of the RCV Demodulator design.

More importantly, however, highly reliable and effective performance with relatively simple and low-cost circuit implementation results from maximum utilization of digital signal processing techniques in the Demodulator design in both the RCV and GCS modems. Analog-to-digital (A/D) conversion of the received signal is performed at IF in the 2 CPSM spread-spectrum demodulator circuit, and all subsequent RCV Demodulator signal processing functions are performed digitally. Many of these digital signal processing techniques have been implemented and proven in prior spread-spectrum modem development programs, and all may be implemented with digital integrated circuits which are currently available. They are particularly effective at negative S/N ratios where reliable performance in a jamming environment is most important. Thus, no critical or high-risk components are required to implement the design and circuit drift or alignment problems are eliminated. Higher equipment reliability and reduced production and support costs result from digital implementation. Most significantly, subsequent to the A/D conversion, no implementation losses occur which would result in degradation of signal processing performance or reduction of effective spread-spectrum processing gain.

Key Features of the RCV Modulator for the Return Link – Simplicity of the modulator section of the RCV modem is its most notable characteristic. Further, the modulator's design places no difficult performance requirements on the RCV terminal's RF equipment and requires no RCV storage of prime mission equipment sensor data. These advantages are direct results of the selection of the hybrid FDMA/TDMA return link waveform, and they contribute significantly

to reduced overall cost of the remotely controlled vehicles.

The modulator section of the RCV modem produces one of two basic types of waveforms for return link transmission to the GCS. In vehicles not requiring prime mission equipment (PME) sensor data (such as digitized video) transmission, or during the non-objective phase of missions requiring such transmissions, the RCV modulator operates in the burst TDMA telemetry transmission mode. In this mode, the RCV time shares the single TDMA channel with up to 24 other RCVs. During transmission of digitized video, or other digital PME sensor data, the RCV modulator operates in a continuous transmission mode on one of five RF channels dedicated to that RCV during the phase of its mission requiring such transmissions. In either mode, the transmitted waveform is a 60 Mpps keying rate, constant amplitude, binary continuous phase shift modulated (2 CPSM), 300 MHz IF waveform.

Key Features of the GCS Demodulator for the Return Link – Because of employment of up to six FDMA downlink channels, the six channel Receive RF Assembly supplies six independent IF signals simultaneously to the Demodulator. Thus, six identical channel Demodulator and Message Decoder Assemblies (CDMDAs) are provided. Five of these assemblies service the five channels devoted to the up to five RCV downlink transmissions of multiplexed status/response data and 20 Mpps digitized prime mission equipment sensor data. Each of these five CDMDAs is connected to a Timing and Control Module (TCM) which provides receive PN sequence generation of the unique PN code employed by each of the five RCVs operating in the video and telemetry (V&T) or continuous telemetry (CT) mode. The sixth CDMDA services the burst transmission TDMA return link channel. It demodulates the burst transmissions received from up to 25 RCVs operating in the TDMA mode for telemetry-only return link communication. Due to the short-burst nature of these transmissions and to the range differentials of the 25 dispersed RCVs, PN code tracking must be independently performed for each of these RCVs. Thus 25 TCMs, each containing a PN code generator which generates the return link PN sequence unique to one of the RCVs, are connected to the single CDMDA assigned to the TDMA channel.

The partitioning of the GCS demodulator functions between the CDMDA modules and the TCMs has emphasized incorporation of all possible demodulation functions in the CDMDAs, since only six of these modules are required in a full-capacity GCS modem. Only those few functions such as PN code generation and tracking which are unique to each RCV are performed by the compact, but more numerous, TCMs. In this manner, the repetition of circuit functions is minimized, resulting in lower cost of the GCS modem.

This modular design concept for the GCS modem readily accommodates reduced cost configuration of the modem for employment in ground stations servicing RCV deployments requiring less than the specified maximum return link communication capacity.

Section 3 of this report provides a more detailed overview of the key design features of the GCS and RCV modem. A comprehensive functional block diagram description of the modems is provided by Section 4.

COST ESTIMATES AND PHYSICAL CONFIGURATION FOR THE PRODUCTION MODEL OF THE RCV MODEM

A configuration analysis of the experimental RCV modem and a comparison of the complexities of the RCV modem with a modem currently in production show that production RCV modems in large quantities should cost substantially less than $10,000 each.

Analysis of the circuit configuration of the RCV modem has shown that the experimental model modem contains fifteen point-to-point wired plug-in printed circuit cards and two modular power supplies. All logic circuits are implemented with discrete small scale integration (SSI) and medium scale integration (MSI) devices. IF analog circuits are implemented with a combination of hybrid modules and discrete components. A total of 301 discrete SSI/MSI logic integrated circuits (ICs), 17 analog hybrid modules, and 463 discrete components (resistors, capacitors, inductors, transistors, diodes, and transformers) are required to implement the proposed experimental RCV modem.

The production RCV modem is estimated to contain a total of ten plug-in printed circuit card assemblies and two modular power supplies. The reduction from fifteen cards in the experimental modem to ten cards in the production modem is accomplished by designing special purpose plug-in etched circuit cards for all circuits, hybridizing the majority of the 60 MHz logic circuits, additional hybridizing of analog circuits, and utilizing three large scale integrated circuits (LSI) for the majority of the slow speed logic timing and control circuits. The resulting ten circuit cards contain 110 discrete SSI/MSI logic ICs, 21 IF analog circuit hybrid modules, 9 high speed logic circuits, and 206 discrete components largely consisting of bypass capacitors and resistors. The total estimated power dissipation for the RCV production modem is 45 watts.

The table on the facing page provides a breakdown of the planning purpose cost estimate for production RCV modems in quantities of 100, 1000, and 10,000 units. The cost estimated for the various categories of items were derived from historical cost data on the HC-278 TADIL-B modem which is currently in production. The TADIL-B modem is enclosed in a 3/4 air transport rack (ATR) short case which contains ten plug-in printed circuit modules and a modular power supply. Overall modem packaging is comparable to that required for the RCV modem. The TADIL-B modem does not contain hybrid modules or LSI circuits. Estimates for these devices were derived from current manpack radio equipment development. The RCV modem is estimated to be approximately two times as complex as the TADIL-B modem. In quantities of 100, the TADIL-B modem costs approximately $7,000.

The figure on the facing page shows a production RCV modem contained in a 3/4 ATR short enclosure. The total required volume is approximately 700 in^3. The modem could be packaged into a different form factor if required by vehicle constraints. The total estimated weight of the 3/4 ATR short package is approximately 15 lbs.

PLANNING PURPOSE COST ESTIMATE FOR PRODUCTION RCV MODEMS

Item	Quantity	Average Unit Cost ($)			Total Cost ($)		
		Qty 100	Qty 1000	Qty 10,000	Qty 100	Qty 1000	Qty 10,000
P/C Cards	10	30	20	15	300	200	150
IC's	110	2.6	2	1.5	286	220	165
Discrete Parts	206	2	1.5	1	412	309	206
Hybrid Modules	30	240	175	160	7,200	5,250	4,800
LSI Devices	3	175	40	27	525	120	81
Power Supply Modules	2	350	250	200	700	500	400
Misc. Hardware	1 Set	200	150	100	200	150	100
Enclosure, Chassis Assembly	1	400	250	200	400	250	200
Subtotal					10,023	6,999	6,102
Assembly and Test Labor					(50%) 5,012	(40%) 2,800	(33%) 2,020
Total per Unit					$15,035	$9,799	$8,122

29261—14

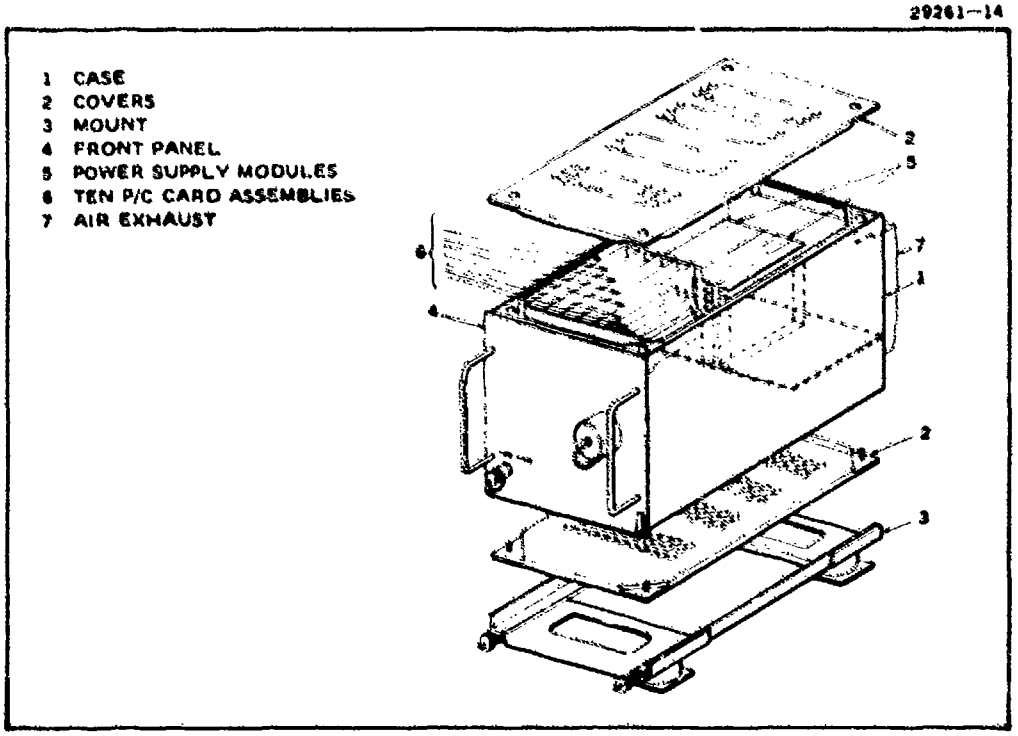

RCV Modem Major Subassemblies. The RCV Production Modem can be housed in a 3/4 short ATR or 1/2 long ATR enclosure with a weight of approximately 15 pounds

DOD IMPLICATIONS OF THE STUDY RESULTS

The results of this study have the potential of wider-range DoD implications in the areas of multipurpose use of the WCCM design concepts, standardization of wideband, and anti-jamming data link characteristics and in terms of the requirements for compatible crypto security devices and RF equipments.

While this current study has been directed at a waveform design and the conceptual design of a modem to satisfy Remote Control Vehicle (RCV) data transmission and position location requirements, the results of the study and the related Phase II effort to design and build the equipment necessary to demonstrate performance of the data link can clearly have wider implications regarding other DoD requirements and programs in the general technology area of wideband, antijam, data communications links. The potential for a wider range of DoD implications arises from the possible use of the WCCM design concept to satisfy multiple DoD data link requirements. It is also possible to identify areas of potential interactions between the results of this study and broader DoD requirements for cryptographic and radio frequency (RF) equipments with the characteristics necessary to support operation of wideband antijam data links. These areas of potential DoD implications of the study results are summarized in the table on the facing page and discussed in further detail in the following paragraphs.

The waveform design characteristics and RCV and Master Ground Control Station (MGCS) modem design concepts produced as a result of this study are particularly responsive to the requirements of a jam-resistant, multiple-access command and control communications system to support RCV operations. It is, however, apparent that many of the requirements of an RCV command and control communications system are similar to the basic technical characteristics of other types of wideband, antijam data link systems. The similarity of basic technical characteristics spans a wide variety of data link applications which employ spread-spectrum modulation techniques to achieve jamming protection, position location capability through range measurement, and multiple access capability. The types of applications include not only communications data links in a strictly limited sense but also applications which integrate or combine communications, navigation, and identification functions in a single data link system. The various types of applications which require wideband, antijam data links tend to differ more in terms of (1) throughput data requirements, (2) the amount of jamming protection required, (3) the ranging accuracy required, and (4) the number of network users or participants than they do in terms of necessary differences in basic modulation technique and fundamental waveform design characteristics.

The DoD implication of these factors is that the waveform design and modem design concepts developed under this study can be considered as a means (either direct or modified in a relatively minor way) of satisfying a much wider range of requirements for data link capability. This potential for multipurpose use of the basic WCCM design concept also has DoD implications relative to an ultimate need to establish a degree of military standardization of wideband, anti-jamming (AJ) communications links in a manner similar to the standardization functions performed by the MIL-STD-188 series documents for other types of data links. It is definitely not being suggested that development of the WCCM concepts be dependent upon the establishment of such standards nor that the WCCM concepts necessarily become the wideband, AJ data link standard. It is, however, recommended that the WCCM concepts be

considered as part of an effort which is directed at the ultimate establishment of military standards for wideband, AJ, multiple-access data links.

Another area of wider DoD implications concerns the availability of crypto security devices suitable for use in secure/antijam burst-data links. The WCCM design concepts presented in this report illustrate the general signal flow interfaces which would be available for the use of security devices, in conjunction with the RCV and MGCS modems. If use of crypto security devices is contemplated in some of the actual system applications of the WCCM concept, it is recommended that actions be taken to determine the availability of security devices with characteristics appropriate for use in wideband, AJ, burst-data networks on schedules compatible with planned implementation of systems employing WCCM concepts.

Another area of potential wider implications of the WCCM study concerns availability of RF equipments (power amplifiers and receivers) of appropriate characteristics to support the pulsed operation of wideband, AJ, burst-data links. As planned use of such types of data links becomes more commonplace, requirements for a family of compatible RF equipments will develop. It is recommended that development of such equipments be actively followed in parallel with the WCCM concept development.

SUMMARY OF DOD IMPLICATIONS OF STUDY RESULTS

Area of Potential Implication Within DoD	Specific Elements of the Implication
Potential for Multipurpose Use of WCCM Design Concept	WCCM concepts can be considered as a means (direct or with modifications) of satisfying a wide range of requirements for wideband, AJ, multiple-access data links.
Relationship to Establishment of Military Standards for Wideband, AJ Communications Links	Recommended consideration of WCCM concepts as part of an effort which will ultimately establish standards for wideband, AJ data links.
Crypto Requirements for the Burst Type of Communications Links	Action required to determine the availability of security devices with characteristics appropriate for use in wideband burst-data networks.
RF Equipment Requirements to Support Burst-Type, Wideband AJ Communications Links	Development of RF equipments (power amplifiers and receivers) with appropriate characteristics to support pulsed operation of wideband, AJ data links is required.

RECOMMENDATIONS FOR FURTHER EFFORT

Further efforts beyond the experimental model evaluations in Phase II of the present program can be of potential benefit in the investigation of system improvement alternatives, system application flexibility features, and detailed definition of system application interfaces.

The essential area of further effort relative to the WCCM waveform design and modem design concepts is clearly the continuation of the program into Phase II to accomplish the detailed equipment design and fabrication, formulation of test plans and procedures, and actual conduct of the field test and evaluation efforts to demonstrate the validity of the design concepts. There are, however, a number of other areas where further effort could prove to be particularly beneficial to the application of the current design concepts in RCV control systems and to other types of wideband, antijamming command and control communications system applications. These areas of possible further effort and the associated potential benefits of the activity are summarized in the table on the facing page.

Three specific areas of potential further effort can be identified under the overall category of investigation of design alternatives which offer the potential of improvements in system operation in certain deployment situations. The first of these efforts would address the potential problem of implementing full return-link security. Achievement of return-link security through use of cryptographic devices may present many problems in RCV applications and may be difficult and expensive to implement, especially for video links. However, incorporation of a remote RCV modem PN pattern change capability under MGCS command control could make extraction of information from the return link difficult enough to be an impractical tactic in normal field operations.

Another effort could address the inclusion in the modem designs of automatic notch filter circuits to combat the interference effects of narrowband emitters on frequencies within the command channel frequency band. This further effort will be particularly appropriate if a review of the planned frequency allocation for the command channel reveals a need for operation in field deployments with essentially co-located narrowband emitters within the same band. The remaining area of investigation of potential system improvement alternatives involves an evaluation of the cost-effectiveness of the modification of the modems to incorporate a capability to remotely command stepping of the RCV modem PN pattern clock to facilitate doppler tracking.

Another category of potential further efforts involves the investigation of features or characteristics which are not necessary for compliance with the specified requirements for the RCV command and control application, but which would enhance the flexibility of the design for potential use in other applications. Investigations in this category include 1) the use of relays to extend operation beyond line-of-sight, 2) adaptation to other data rate/bandwidth requirement applications, 3) automatic channel assignment switching capability in the MGCS, 4) increased remote terminal capacity of the MGCS, and 5) modifications which would provide ICNI capability. Investigation of these alternate application features prior to commitment of the WCCM design to production is recommended to identify those system application flexibility features which could be implemented or specifically planned for a very low impact on production costs of the equipment.

The remaining area of potential further effort concerns system application interfaces. Since it is anticipated that development of both the MGCS control processor and the tracking antennas will proceed in parallel with the WCCM concept development, it is recommended that particular effort be devoted to a detailed definition of interface requirements to insure the compatibility of the parallel developments. In regard to the MGCS control interfaces, the interface definition could very usefully proceed to the point of definition of the control algorithms. Once the algorithms are defined, control interface compatibility could be achieved even though the control function might be performed within a variety a different processors in different specific system applications.

SUMMARY OF RECOMMENDED AND CANDIDATE AREAS FOR FURTHER EFFORT

Areas of Further Effort	Potential Benefits
Experimental Model Evaluation • Detailed equipment design and fabrication • Test plan/procedure formulation • Conduct of field test and evaluation	Provides field demonstration of the implementation feasibility and performance characteristics of the modem design.
Investigation of System Improvement Alternatives	
• Remote control PN pattern change capability	• Improve link security characteristics without imposing requirement for security equipment in RCV.
• Automatic tracking notch filters	• Decreases interference susceptibility to standard (narrowband) emitters at frequencies within the uplink and downlink channels.
• Remote control doppler tracking	• Commanded stepping of RCV PN pattern clock to inexpensively facilitate Doppler tracking.
Investigation of System Flexibility Features	
• Use of relays to extend operation beyond line of sight	• Early evaluation of design implications of operation in system where relay is required.
• Data rate/bandwidth adaptation	• Early definition of minor design changes required for operation where limited bandwidth channels are available.
• MGCS automatic channel assignment switching	• Potential system application flexibility of automatic MGCS channel assignment capability.
• Increased remote terminal capacity of MGCS	• Potential for control of more than 25 vehicles.
• Modifications for ICNI capability	• Early definition of the minor design changes required to provide basic ICNI system capabilities.
Investigation of System Application Interfaces	
• GCS control interface requirements/algorithms	• Definition of Ground Station Control processor interfaces and control algorithms will facilitate compatible developments.
• Tracking antenna control interfaces	• Early detailed definition of interface requirements will facilitate compatible parallel development

SECTION 1
ANALYSIS OF REQUIREMENTS AND TECHNICAL GUIDELINES

Summary of Specified Performance Requirements for the Wideband Command and Control Modem. 1-0
Analysis of Forward Link and RCV Modem Performance Requirements . . . 1-2
Analysis of Return Link and GCS Modem Performance Requirements 1-4

SUMMARY OF SPECIFIED PERFORMANCE REQUIREMENTS FOR THE WIDEBAND COMMAND AND CONTROL MODEM

The Wideband Command and Control Modem is required to provide for effective simultaneous digital data communication between a single Ground Control Station and up to twenty-five airborne Remote Control Vehicles dispersed over a 250 nmi range. The communication links waveform design must accommodate command, control, and position location of the 25 RCVs in a tactical ECM environment.

The waveform, modem, and system design implications of the Wideband Command and Control Modem (WCCM) performance requirements (see figure opposite) are the subject of several subsequent topics. The specified requirements which lead to these design implications are summarized in the following paragraphs.

Specified Requirements for Data Communication Capacity and Error Control – The forward link (or uplink) from the Ground Control Station (GCS) to the Remote Control Vehicles (RCVs) must provide for transmission of RCV command and control data at 2000 bps per RCV. Comparably, the return link (or downlink) from the RCVs to the GCS must provide for multiple-access communication of RCV status/response (or telemetry) data at 2000 bps per RCV. Additionally, multiple-access communication of 20 megabit-per-second digitized video transmissions from up to 5 of the 25 RCVs, simultaneously, must be accommodated by the return link.

The specified requirement for a 10^{-9} (or less) undetected bit error rate on the uplink command and downlink status response data is indicative of the critical importance of reliable communication for control and successful retrieval of unmanned vehicles.

The 100-MHz information bandwidth required for simultaneous return link transmission of five 20-MHz digitized video signals is a major factor of required WCCM performance capability. Fortunately, the additional bandwidth above this information bandwidth for error control and processing gain is less stringent than that for command status/response data. The requirement for only 10^{-3} undetected bit error rate is consistent with the inherent redundancy in uncompressed video.

Specified Requirements for ECM Protection – Specified ECCM requirements for the WCCM include protection against jammers of the CW, swept CW, pulsed noise, and gaussian noise types. Inclusion of an antispoof capability is also desirable to minimize the likelihood of opposition control of the RCVs or of simulation of the RCV command and telemetry signals. The ECM threat expected to be encountered by the RCVs or the ground stations are not specified. However, because of the importance of this jamming immunity for remote control of an unmanned air vehicle, a 30-dB minimum processing gain is specified for the forward link which carries GCS commands for the RCVs. Maximum practical processing gain on the return link telemetry is specified and is highly desirable. Maximum practically achievable processing gain is particularly important in the RCV uplink receiver in view of the greater potential range advantage of a jammer during the objective phase of the mission in opposition territory.

Specified Requirements for Modularity of Data Rates and Processing Gain – The modem design for multiple access capability is required to permit modular adaptation of the waveform to provide additional processing gain for fewer users when fewer than 25 vehicles are deployed. This design would provide additional ECM protection for critical missions wherein maximum deployments are not required. Economic achievement of this capability will enhance the utility of the system to adapt to a wide range of operational requirements.

Specified Requirements for Position Location Accuracy – The major system impact of the requirement for position location capability in the WCCM

waveform is the need for at least two ground station receivers located at some distance from each other. However, availability of this second receive site will enhance the ECM invulnerability of the system. The waveform coding design impact of the 100-foot position location accuracy requirement is not appreciable. However, multiple access return link transmission by 25 RCVs to the two ground stations will require adequate provision for guard times between individual RCV transmissions to prevent overlapping receptions at either of the displaced ground stations.

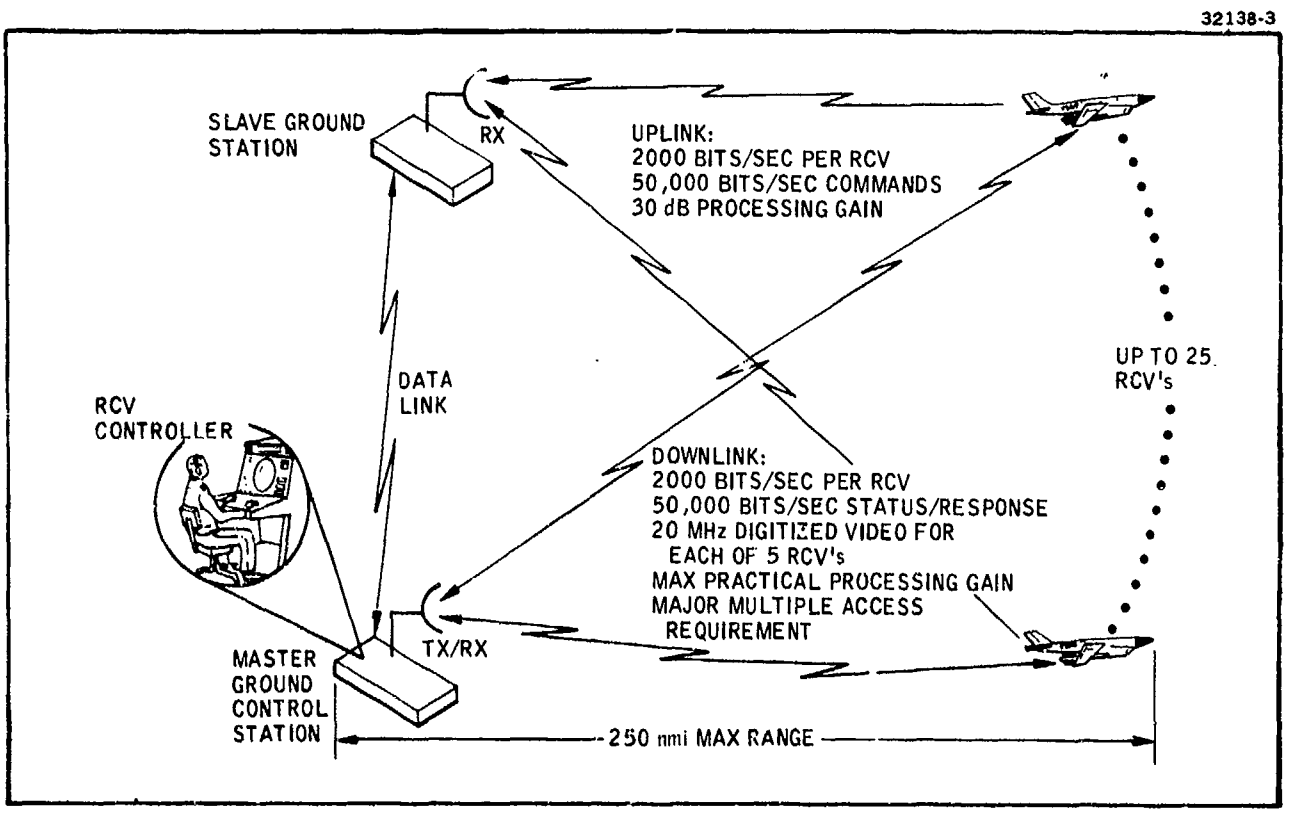

Overview of Specified Performance Requirements for the WCCS. Provision is made for data communication capacity and control, ECM protection, modularity of data rates and processing gain, and position location accuracy.

ANALYSIS OF FORWARD LINK AND RCV MODEM PERFORMANCE REQUIREMENTS

The Wideband Command and Control Modem development program is aimed at achievement of effective jamming-resistant communication for real-time command and control of unmanned remotely controlled vehicles. Consideration of this class of application, coupled with careful attention to achievement of a fully effective low-cost RCV modem, stongly influences forward link waveform design.

Waveform and Modem Design Impact of Forward Link Performance Requirements – The forward link carries the flight control commands for unmanned air vehicles. Thus, reliable reception of these commands is essential to successful RCV mission performance and to controlled return and recovery of the vehicle upon completion of its mission. Additionally, the uplink is subject to a greater ECM threat than the downlink. RCVs carrying uplink receivers will be required to penetrate deep into opposition territory where received signals will be subjected to very significant path loss. Correspondingly, a jamming transmitter well located in this opposition-controlled territory will possess a significant distance advantage over the RCV ground control facility uplink transmitter. Thus, because of the major importance of the uplink command data and the severity of the uplink jamming threat, achievement of significant Wideband Command and Control Modem (WCCM) uplink waveform processing gain is critical to system performance.

Achievement of the specified minimum processing gain of 30 dB (corresponding to a bandwidth spreading ratio of 1000) will provide the required 10^{-5} undetected error rate at a jammer/signal ratio of greater than 20 dB. Fortunately, the relatively lower information bandwidth of the uplink lends itself to practical implementation of sufficient uplink processing gain to achieve effective uplink ECCM capability. The 50 Kbps information rate required to accommodate up to 25 RCVs at 2000 bps each dictates a minimum uplink keying rate of 50 Mpps to achieve the 30 dB of processing gain. However, a keying rate of greater than 50 Mpps is required in order to accommodate message and error control coding overhead above the specified information rate.

RCVs will be required to penetrate far beyond the FEBA and well into opposition territory where a jamming transmitter deployed against the Ground Control Station (GCS) to RCV forward link receivers in the RCVs will possess a significant distance advantage over the GCS transmitter. Yet, for effective control, guidance and recovery of an unmanned vehicle, reliable communication on the forward link is most essential. Antispoofing capability is also critical in the command link for an unmanned RCV. Thus, a waveform and modem design which minimizes false command message acceptance by an RCV and maximizes its signal tracking and command communication reliability is of paramount importance to effective deployment of RCVs in an ECM environment. A waveform design which minimizes signal interceptibility and exploitability is desirable to inhibit potential jammer evaluation of its effectiveness against the RCVs for maximum operational success.

Waveform and Modem Design Impact of System Application and RCV Operational Considerations – Current operational studies envision up to 50 RCVs assigned to a single tactical air squadron, with simultaneous control of up to 25 RCV missions from the GCS. This ratio of 50 RCVs per GCS indicates that a design approach which minimizes the complexity of communications electronics in the RCV will result in the most cost-effective design.

Modem complexity and, therefore, cost is significantly influenced by the selected waveform design. Since modem receive signal processing functions are required for signal acquisition, tracking, and reacquisition at considerably

negative signal-to-noise ratios in an ECM environment, the demodulator is significantly more complex than the modulator in a spread-spectrum modem. Therefore, realization of high-performance at minimum cost in the RCV modem requires particular emphasis on forward link waveform design to be responsive to these considerations. Further, for minimum cost of overall RCV electronics, the waveform and modem designs should account for (and not result in a detrimental influence on) the total cost of the RCV. Thus, reduced RCV modem cost should not be achieved at the expense of increased performance requirements for the RF equipment, prime power source, and other avionics equipment in the RCV.

The WCCM development program is aimed at achievement of effective jamming-resistant communication for real-time command and control of unmanned remotely controlled vehicles. The forward link transmissions convey the GCS commands which control the flight of the RCV and the operating modes of its avionics equipment. Therefore, forward link waveform and RCV modem design should place emphasis on achievement of a very low probability of RCV acceptance (and thus execution) of an erroneous or false command message rather than just accomplishment of a low, undetected bit error rate. This feature is particularly important during poor radio propagation conditions and during heavy jamming of the forward link receiver in the RCV. Thus, the design approach should be oriented toward highly reliable communication and processing of individual RCV command messages rather than toward low, overall, forward link undetected bit error rate. This is a subtle, but very important, distinction in error-control philosophy.

In order to be most effective in providing timely, reliable, and responsive control of the unmanned vehicles under unfavorable forward link communication, the GCS requires return link feedback from the RCV modem which designates whether or not each forward link command message has been reliably received by the intended RCV. Thus, the return link waveform and modem designs should provide a means of accommodating RCV positive acknowledgement of successful receipt of valid, error-free, command messages. This will facilitate GCS retransmission of commands which have not been successfully received by the RCVs.

It is evident that forward link command rates to specific RCVs will be highly variable, depending upon the mission phase and effectiveness of communication for each RCV deployed. Thus, the forward link waveform design should incorporate an effective automatic means to simultaneously accommodate unique command rates to each of the RCVs at any given time, as determined by the GCS.

ANALYSIS OF RETURN LINK GCS MODEM PERFORMANCE REQUIREMENTS

Analysis of the return link requirements and systems applications of remotely controlled vehicles discloses that the return link waveform design, and attendant Ground Control Station demodulator design, should be adaptably responsive to a wide range of user operational needs in terms of: 1) classes of return link data, 2) the number of remotely controlled vehicles accommodated by specific system configurations, and 3) the degree of ECM protection provided.

The principal performance objective of the Wideband Command and Control Modem (WCCM) development effort is the achievement of a cost-effective approach to ECM resistant communications for command, control and position location of up to 25 Remote Control Vehicles (RCVs) from a single ground control facility. In order to accommodate up to 25 RCVs dispersed over a 250-nmi range, the capability for RCV downlink multiple access to the single control facility is particularly important. Development of the optimum waveform design requires adequate consideration of the network control and coordination aspects of the communication system, as well as design for reliable and efficient spread spectrum communication links.

Waveform and Modem Design Impact of Return Link Performance Requirements – The WCCM return link for the RCV command and control communications system is a multiple-purpose link. Unmanned vehicle status and responses to forward link commands at 2000 bits per second per vehicle require 50,000-bit-per-second information rate for simultaneously handling these signals from 25 vehicles. Additionally, the return link must carry 20-megabit-per-second digitized video signals from each of 5 vehicles simultaneously, resulting in a 100-megabit-per-second video or other prime mission equipment sensor data information rate. Operationally, reliable transmission of vehicle status and command responses on the return link is probably more critical to successful mission performance than the video. This status/response data is required for the unmanned vehicle monitoring necessary to effective forward link control by the Ground Control Station (GCS). This relatively greater importance is reflected in the specified 10^{-5} undetected error rate for the status/response data. Because of the importance of the status/response data for effective Ground Control Station (GCS) monitoring of vehicle performance and responsive vehicle command generation it is specified that maximum practical degree of processing gain be achieved for downlink status/response messages. This would improve system reliability with balanced ECM protection for uplink commands and downlink status responses.

Incorporation of the required distance measurement capability in the WCCM waveform is desirable for RCV position location by the ground control facility. Thus, the downlink waveform coding required for this function should be incorporated in the status/response transmissions, since these signals will be available full-time from all deployed RCVs. It is important to note that system utilization of the ranging properties of the WCCM waveform for RCV position location will require employment of return link receivers at two or more ground stations suitably displaced from each other. Due to potential utilization of multiple ground stations in system configurations where RCV position location capability is required, the return link multiple access waveform design must account for the guard times required between consecutive transmissions from any two RCV's to prevent overlapping reception of these signals at either ground station. For position location at 250 mile range, the typical distance between any two ground stations should be in the order of 50 miles, resulting in a nominal guard time of approximately 300 microseconds or more. Worst case guard time allowances

are not required to accommodate the 250 maximum mile range differential for a pair of RCVs if the waveform and modem designs accommodate an effective means of ground station control of RCV transmission times.

Return link waveform and modem design is driven by the maximum traffic requirements for simultaneous multiple-access communication of telemetry data at 2000 bps from each of 25 RCVs and, additionally, to accommodate simultaneous multiple-access of 20 mbs digitized video from 5 of those RCVs. The resultant bandwidth requirements approach 200 MHz if significant processing gain is to be achieved on the telemetry data. The 50 dB dynamic range resulting from dispersion of the RCVs throughout the 250 mile range specified prohibits effective employment of a code division multiple access waveform design for the return link.

Waveform and Modem Design Impact of System Application and RCV Operational Considerations — It is important to recognize that many applications of RCVs may not require accommodation of video transmissions. Further, certain classes of tactical operations with RCVs will emphasize deployment of a minimum complexity, highly portable ground control station devoid of all-but-essential automatic control aids and requiring capability for simultaneous control of only a small number of RCVs. Certain critical and discreet operations may stress deployment of only one RCV, but with provision for a very high degree of processing gain on the command and telemetry links for maximum ECCM effectiveness.

These considerations for flexibility to meet a wide variety of operational needs and specialized mission capabilities dictate a GCS demodulator design approach which can modularly adapt to a wide range of operational needs and deployment levels in a cost-effective manner. For example, the return link waveform design approach should not be based only on the maximum capacity specified. To do so would impose a requirement on the RCV modulator and its associated RF equipment for operation at greater bandwidth than that required by any individual RCV for its own return link data transmission. Similarly, since many operational uses of RCVs will not require wideband prime mission equipment sensor data transmission, or accommodation of more than a few RCVs simultaneously in flight, the GCS modem should not be configured only for the maximum traffic requirements.

The ground control station configurations in which the ground version of WCCM will be operated have not been specified for this study. However, the ground station requirements are expected to differ widely from one application to another. For example, eventually many ground stations will be highly automated in order to provide simultaneous real-time control of up to 25 RCVs. However, minimum system configurations in tactical environments may well be aimed at essentially manual control of one, or several, RCVs. Therefore, the return link waveform design and GCS modem design should facilitate economical system configuration for small, relatively unsophisticated RCV operations, as well as accommodating a highly automated full-capacity RCV command and control system.

These considerations strongly indicate that the design effort should adequately evaluate waveform and modem design approaches that offer both modularly increasable return link channel capacity and modular accommodation of varying quantities of RCVs.

SECTION 2
SELECTION OF NETWORK CONFIGURATION AND WAVEFORM PARAMETERS

Network Configuration Selection and Trade-Offs

Combined Versus Separate Forward and Return Link 2-0
Selection of Forward Link Transmission Scheme 2-2
Selection of Return Link Transmission Scheme 2-4
Selection of Return Link Channel Parameters 2-6
Comparison of Candidate Spread-Spectrum Waveforms 2-8
Trade-Off Between Partial and Full Occupancy Modulation Techniques 2-10

Waveform Parameter Selection and Trade-Offs

Evaluating Spread-Spectrum Signal Types 2-12
Selecting the Modulating Waveform 2-14
Performance Comparison Between Costas Loop and Gated Carrier Phase Tracking 2-16
Implementation Comparisons Between Costas Loop and Gated Carrier Phase Tracking 2-18
Forward Link Message Timing Structure Design Considerations... 2-20
Return Link Message Timing Structure Design Considerations 2-22
Selecting the Pseudo Noise Sequence Length 2-24
Selection of Modular Processing Gain Increments 2-26
Selection of Error Control Approach 2-28
Linear Encoding and Decoding 2-30

Modem Design Feature Selection and Trade-Offs

Single Versus Dual RCV Pseudo Noise Generator Trade-Off 2-32
Selecting the RCV Modem Forward-Link Signal Acquisition/Reacquisition Approach 2-34
Selecting the GCS Burst TDMA Return Link Signal Acquisition Approach 2-36
Review of Current State-of-the-Art Parallel Correlation Hardware Technology 2-38
Selecting the Approach to Time Difference Measurement for Ranging at the GCS 2-40
Ranging and Position Location Accuracy Evaluation 2-42
Selecting the Approach to TDMA Return Link Guard Time Management 2-44
Determining the Optimum Approach to Analog/Digital Quantization 2-46

COMBINED VERSUS SEPARATE FORWARD AND RETURN LINKS

Use of a single channel for both forward and return link traffic was found unfeasible due to the excessive RCV complexity, cost, weight, and power requirements imposed by this concept.

A first step in choosing a transmission structure for a multi-user communication system is to determine the number of channels to be used to satisfy the information transmission requirements. Generally, this selection follows directly from the specific connectivity requirements of the system, combined with evaluation of hardware feasibility and spectrum availability. The top-level choice for the WCCM program is represented by the use of either a combined channel, carrying both forward and return link traffic or the use of separate channels for forward and return link transmissions.

The key consideration in this trade-off as well as in most of the waveform and modem design trade-offs was to stress the over-all simplicity in the RCV equipment, thereby minimizing the RCV equipment cost, power requirements, and weight; while achieving a high level of modem performance.

The concept of combining all forward and return link traffic on one channel was rejected as a result of various considerations. First, there is no system operational requirement for RCV to RCV communication, i.e., one RCV does not have to listen to transmissions originating from other RCVs. This implies that the designer has the freedom of selecting a scheme where the RCVs transmit and receive over different channels. Secondly, there is a great imbalance in the traffic requirements between the forward link and the composite return link traffic. Assuming a 30 dB processing gain on both the forward link and the return link data, and no processing gain on the video, the forward link traffic requirement equals 60Mchips per second, while the return link traffic is 160Mchips per second. Thus the loading ratio is about one to three. This ratio as such does not provide immediate grounds for dismissal of the concept. However, combining this ratio with the fact that two-thirds of the above number for the return link traffic is imposed by the video, which is only transmitted over a limited duration of the mission, the inefficiency of the combined scheme becomes apparent.

Two ground stations are required to accommodate RCV position location by range measurements. This means guard times must be incorporated between RCV message transmissions, permitting any transmission to be received at two physically separated locations free from interference from transmission from another RCV. For any given dispersion of RCVs there is a upper limit to how densely messages can be packed, determined by the relative geometry of the RCVs and the ground stations. Due to the high data rate of the video transmissions it is beneficial to transmit the video data at frequent, short intervals in order to avoid excessive video storage requirements. A high repetition rate in the transmission of the video bursts implies that the telemetry transmissions, occupying the channel between the video bursts, must also have a short duration, which means that the telemetry is also transmitted at a high channel access rate. Since each burst is associated with a guard time requirement, the shorter the burst the larger is the composite guard time and the higher is the instantaneous transmission rate and the less efficient is the use of the channel.

A table in a subsequent topic in this section shows the design impact if all return link data is transmitted over a single channel, using time-division multiple access. The table shows that to satisfy the guard time requirement, an instantaneous transmission rate of 200Mchips/sec. must be employed to handle

the return link average traffic equalling about 160Mchips/sec. Since incorporation of the forward link traffic will not only add 60Mchips/sec of traffic but also add to the total guard time requirement, a scheme where all forward and return link traffic is transmitted over a single channel must operate at a keying rate of at least 300Mchips/sec.

If separate channels are employed for the forward and return link traffic, the forward link traffic requirement is 60Mchips/sec. Comparing the two approaches, the implications on the RCV hardware resulting from the combined channel approach are obvious. The complexity of the modem design lies primarily in the receiver/demodulator portion, i.e. it is the forward link keying rate that determines the complexity of the RCV equipment. Todays logic circuit technology readily permits the design of a demodulator keyed at 60Mchips/sec. However, operation at 300Mchips/sec not only requires a completely different class of components which are more costly and have very high power dissipation, but also imposes an unrealistic level of complexity on the modem design. Due to these considerations the combined link approach was rejected.

One additional, but perhaps strongest, single factor in the rejection of any concept involving a combination of forward and return link traffic is the cost and complexity of the RCV signal PN code synchronization acquisition circuitry imposed by the use of burst transmissions on the forward link. As is indicated in the following topics, use of separate forward and return link channels suit the WCCM application well. The RCV signal acquisition function is simplified by use of a continuous forward link transmission scheme, which not only permits reduction in the RCV circuitry but also results in overall improvement in the forward link transmission reliability.

ADVANTAGES OF SEPARATE CHANNELS FOR FORWARD AND RETURN LINK AS OPPOSED TO A COMBINED CHANNEL FOR ALL TRAFFIC

- Implementation of the RCV demodulator with 60 Mpps logic as opposed to 300 Mpps logic required for the combined approach, resulting in:
  - Considerable reduction in RCV equipment cost, weight, complexity and power requirement.
  - Reliable operation with basic state-of-the-art logic circuitry.
- Relaxed transmit control timing requirements.
- Considerable simplification in the RCV signal acquisition circuitry.

SELECTION OF FORWARD LINK TRANSMISSION SCHEME

The critical design aspect of the forward link is the acquisition and maintenance of synchronization. A continuous forward link transmission scheme maximizes available tracking signal energy and at the same time minimizes the RCV equipment complexity.

The performance of trade-offs between transmission schemes for the forward flight control command link stressed the selection of a scheme that provides an optimum combination of the following features: 1) optimum data decisioning in noise, 2) optimum resistance to electronic countermeasures, 3) traffic security, 4) reliable signal tracking even under weak signal conditions and during fades, and 5) simplicity of the RCV equipment. Constraints applied to the trade-offs were that the link had to furnish data transmission capability of 2400 bps (2000 bits of information, 400 bits due to overhead) to each of up to 25 RCVs, provide 30 dB of link processing gain, and that the selected scheme should lend itself to modular adaptation of processing gain when fewer than the maximum number of vehicles are in use during a mission.

The first choice consisted of selecting between approaches that provide either continuous or intermittent reception of the forward link transmission by the individual RCVs. The noncontinuity in the reception of the intermittent forward link schemes may either be due to rapid antenna directivity switching or due to some time/frequency signaling assignment of such a kind that an RCV processes the received signal only at given time/frequency combinations. All intermittent approaches were rejected on account of their complexity, poor flexibility, and most important lack of good signal tracking properties. The particular emphasis given to signal-tracking properties arises from the fact that in an operational environment the forward link communication can be expected to be interrupted because of atmospheric propagation anomalies or because of the flight profile being pursued by an RCV over varied terrain. Consequently, to maximize the communications reliability, the maximum amount of signal energy should be available to the RCV for the acquisition and maintenance of receive signal synchronization in order to minimize the time required for signal synchronization and to minimize the complexity of RCV hardware.

Code-division multiplex and frequency-division multiplex transmission techniques represent degenerate cases of continuous forward link transmission. Neither of these schemes allow the RCV to continuously receive and process the full energy contained in the forward link signal. Both schemes involve unnecessary equipment complexity without furnishing any unique payoffs.

The selected approach uses a single channel for the forward link transmission. Consecutive messages are transmitted on a continuous basis with regard to the transition between two messages, and each message carries an address specifying the destination RCV. Since the forward link employs a single PN code for spectrum-spreading, every RCV can continuously extract tracking information from the received signal, making all the signal energy available for acquisition and tracking purposes. This feature speeds up the initial acquisition and reacquisition process, and hampers the jammers capability to determine the optimum time to burst jam in order to interfere with the message receptions by a specific RCV. Continuous signal reception also permits utilization of narrower tracking loop bandwidth, providing additional beneficial effects against jamming. Further the signal exploitability is minimized in that the undirected and continuous properties of the transmitted signal prevent the

jammer from extracting information about the system loading, the number of messages transmitted to any given RCV, and the effectiveness of electronic countermeasures.

Use of addressed messages as contrasted with the use of a dedicated time slot for each RCV in the forward link furnishes additional advantages in that it facilitates employment of variable message rates to the individual RCV. The capability of adaptively adjusting the message rates to better suit the prevailing operational conditions is extremely useful. In addition to making possible better use of the available resources in that adaptive traffic adjustments as a function of mission phase can be accomplished, this capability permits significant improvement in the overall message transmission reliability when combined with positive RCV acknowledgement of valid message reception. Message addressability also hampers the jammer's effectiveness in concentrating burst jamming on a specific RCV.

In order to provide 30 dB of processing gain to a continuous link designed to convey 2400 bps to each of 25 vehicles, the PN generator must be clocked at 60Mchips/sec. In this mode, the selected continuous scheme transmits 750 80-bit message blocks per second, thereby providing an average access rate of 30 messages per second per RCV.

ADVANTAGES OF THE CONTINUOUS FORWARD LINK, ADDRESSED MESSAGE TRANSMISSION SCHEME

- All Signal Energy Available for Tracking
- No Transmission Overhead for Sync Acquisition
- Rapid Reacquisition if Sync is Lost
- Signal Exploitability Minimized
- Incorporation of Message Address:
  - Allows adaptation to mission phase traffic requirements for an individual RCV
  - Provides improved performance under high raw error rate conditions when used in conjunction with RCV positive acknowledgement
  - Reduces effectiveness of burst jamming concentrated on a specific RCV

SELECTION OF RETURN LINK TRANSMISSION SCHEME

Of the several candidate schemes for return link transmission which where considered during this study, the hybrid FDMA/TDMA scheme was selected because it provides decreased RCV modem complexity and cost, and permits the GCS modem to be modularly configured for a wide variety of RCV deployment levels.

Various multiple access approaches were investigated to find a scheme which efficiently handles the return link transmissions originating from up to 25 RCVs, dispersed over a 250 nmi range. The problem of selecting a scheme is compounded by the fact that the return link traffic is composed of two types of data: (1) telemetry from each RCV, and (2) high speed video from a maximum of any five RCVs. An additional consideration, pertaining to the transmission of the video, is the fact that video is only transmitted during certain phases of a mission.

Code division multiple-access can immediately be rejected by the 50 dB dynamic range problem corresponding to a 250 mi propagation difference. This figure is mainly applicable to the telemetry transmissions since it can be assumed that the vehicles transmitting video at any instant are normally all at distances of the same order of magnitude from the ground stations. However, due to the high nominal data rate of the video, 20 Mbps, very limited processing gain can be applied to these links. Thus, even without any range difference, the normal assumption on which the code division multiple access approach is based, (i. e. large link processing gain) is not satisfied.

Of the remaining possibilities, the straight FDM approach can be rejected on the grounds of the impractical hardware requirements associated with reception and demodulation of the large number of return channels for 25 RCVs. The two surviving candidates, TDMA and hybrid TDMA/FDMA, were subjected to detailed comparisons.

The use of trilateration for RCV position determination imposes a constraint on the selection of the return link multiple access transmission scheme in that the chosen technique must accommodate return link receptions at two physically separated ground stations without mutual interference between transmitted messages originating from different RCVs. For return link paths that are separated in frequency, this constraint of course represents no problem. For time division multiple access, however, this requirement implies that some guard time must be incorporated into the return link message transmission structure. It should be stressed that the purpose of incorporation of guard time in this case is not the same as the use of guard time in TDMA systems in general, where the guard time durations could basically be reduced to zero if one was willing to include sufficient complexity and sophistication into the system. The guard time required to provide interference free reception at two separated locations is always non-zero, depends on the relative geometry of the vehicles and the two ground stations, and is relative in the sense that it is a function of where it is being observed.

Since guard time is required only between transmissions originating from different RCVs, the problem is most severe when a single channel TDMA return link approach is utilized, and is lessened as more frequency separated channels are incorporated in a hybrid FDMA/TDMA approach.

The table on the facing page indicates the relative system impact of a single channel TDMA versus a hybrid FDMA/TDMA approach, where the hybrid scheme employs one TDMA channel for transmission of the telemetry from all RCVs, and up to five additional frequency separated channels for transmission

of the return link video. In addition to the severe cost impact imposed by the high speed logic required for a nominal 200 Mpps PN keying rate by the single channel TDMA approach (see the table), this scheme is associated with excessive video storage requirements, high RCV transmitter peak power requirements, and generally with critical timing coordination and complicated high speed signal processing. The comparison shown in the table is based on a burst rate selection that enables interburst PN code tracking without need for ground station receiver reacquisition at the beginning of each burst. Other reasonable assumptions relative to the TDMA burst characteristics would furnish very similar results. Decreasing the burst rate relaxes the permissible average guard time but compounds the serious video storage problem. One additional consideration pertaining to the single channel TDMA scheme is that this scheme does not lend itself to modular design to the same extent as the FDMA/TDMA approach would. Thus, the single channel TDMA approach can be expected to impose a much higher relative cost, when deployed with less than the maximum number of RCVs or where less than five video channels are needed.

The bandwidth requirement of the hybrid FDMA/TDMA will in general exceed that required by the single channel TDMA operation. However, the FDMA/TDMA scheme, when operating in certain reduced deployment modes, will result in a decrease in the required bandwidth, and can even under certain conditions operate over narrower spectrums than required by the TDMA approach, given the same chip rate is always utilized in the TDMA scheme.

The critical design reliability and cost impact associated with the TDMA approach resulted in favoring the hybrid FDMA/TDMA scheme, where all telemetry returns are time multiplexed onto a single channel, and each video return transmitted over a separate channel.

COMPARISON OF SINGLE CHANNEL TDMA VERSUS HYBRID FDMA/TDMA FOR THE WCCM RETURN LINK

Item		Single TDMA	FDMA/TDMA
PN Keying Rate		200 Mpps	60 Mpps
PN Tracking Accuracy Required		0.6 nsec	2 nsec
PN Correction Rate		2000/sec	600/sec
Burst Rate per RCV		200/sec	60/sec
System Burst Rate		5000/sec	1500/sec
Burst Length	Telemetry	60 μsec	370 μsec
	Video & Telemetry	550 μsec	-----
Average Guard Time		50 μsec	300 μsec
Video Storage Required		100,000 Bits	None
Reacquisition Complexity		Significant	Minor
Peak RF Power Required		10 dB Above Average	Average

SELECTION OF RETURN LINK CHANNEL PARAMETERS

Commonality with the forward link and commonality and interchangeability between the return links support selection of six 60 MHz channels for return link transmission: five of these for video and one timeshared for return telemetry from all RCVs.

The previous topic documents the rationale for selection of a return link transmission scheme, where the return link telemetry from the RCVs was transmitted by means of TDMA, and frequency separated channels were employed for the video transmissions. What remains to be determined is the number of TDMA channels to be used for carrying the return telemetry, and the characteristics of the FDMA channels.

One of the objectives used in making this selection was to furnish the return link telemetry with maximum reasonable anti-jamming (AJ) protection. This objective is justified by the fact that for successful vehicle control and effective use of the RCV positive message acknowledgement concept, the return link should possess a communication reliability of the same order of magnitude as the forward telemetry link. A second objective, postulated in the statement of work, is to give consideration to equalizing the bandwidths of the forward and return links.

With the same message overhead on the return link telemetry as on the forward link telemetry (i.e. an effective data transfer of 2400 bps per RCV), the composite return link telemetry from 25 vehicles equals 60 kbps, which is the same as the forward link composite data transmission rate. Aiming for identical processing gains on the forward and return links, it becomes clear that due to the necessary incorporation of an irreducible non-zero amount of average guard time per message transmission (necessitated by the requirement of obtaining interference free transmission at two separated locations) the return telemetry TDMA, if only one channel is employed, must be keyed at a higher rate than the forward link, or alternately two channels must be employed to carry the return link telemetry. The required PN keying rates for these schemes as a function of the average guard time are shown in the facing figure, by the curves denoted by A and B respectively. The curves are based on each RCV transmitting the 2400 bps equally divided over N bursts per second. Four overhead data bit intervals are added to the front of each burst to provide time for receiver carrier tracking refinement.

An average guard time of about 300 microseconds represents a good compromise between the accuracy with which the RCV transmit timings must be controlled, the complexity of PN pattern search, and the position location determination accuracy. Curve A shows that a single TDMA return link with 30 dB processing gain must, for this average guard time, be keyed in excess of 80 Mpps. With reference to the present logic circuit technology, the components operating reliably at this speed are considerably more costly and have much higher prime power requirements than components functioning reliably at 60 Mpps. The impact of these considerations on the RCV modem design and the equal bandwidth objective were grounds for rejecting the approach of using a single channel with 30 dB processing gain.

The return link telemetry can readily be transmitted over two TDMA channels, each keyed at the instantaneous PN code rate of 60 Mpps. The average guard time for this scheme would exceed 1 ms as can be found by extrapolating curve B. This approach was chosen during the early phases of the study, but subsequently rejected. The disadvantages of this approach lie in an increased requirement for bandwidth and in increased ground station receiver

equipment complexity, if flexibility in RCV assignment to any one of the two TDMA channels is to be provided.

Reduction of the maximum processing gain to 27 dB (rather than 30 dB) makes it possible to place all return link telemetry on a single 60 Mpps PN keyed TDMA channel (see curve C). The resulting instantaneous maximum data rate for this structure is 120 Kbps, allowing for an average guard time of 300 microseconds when each RCV transmits the telemetry at 60 bursts per second. The resulting reductions in the spectrum requirement and circuit complexity were deemed to be of significant value to compensate for the 3 dB decrease in processing gain, leading to the selection of a single TDMA return link for the telemetry. The single channel approach is also much more suitable for modular ground station design, in that no unnecessary major function must be incorporated into the basic system for handling various quantities of RCVs up to a total of 25.

In order to have a simple integer relationship between the PN keying rate applied to the video data and the one used on the forward link and return link telemetry, the selection for the video channel is between 30 and 60 Mpps, since the video data when multiplexed with the telemetry data has a rate exceeding 20 Mpps. No strong arguments exist for either choice. The 60 Mpps keying rate is supported by aiming for commonality between all return link channels, resulting in equipment simplicity and a 3 dB AJ advantage (when transmitting low speed video). The 30 Mpps keying rate would result in preservation of bandwidth. Based on future systems employing data reduction units to decrease the video rate, the 60 Mpps scheme was adopted.

32138-4

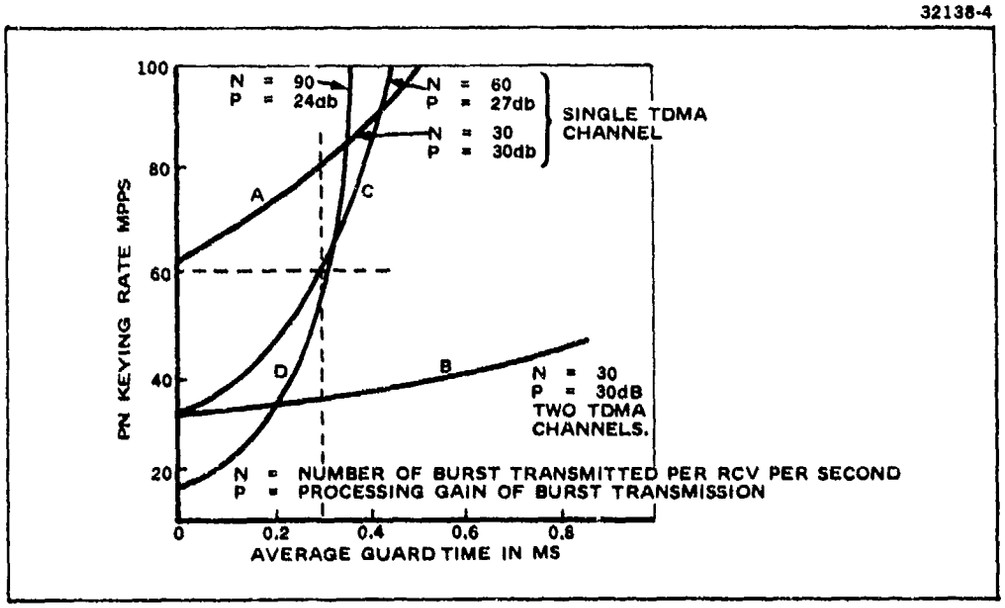

Required PN Keying Rate Versus Average Guard Time for Single and Dual TDMA Return Link Channel Implementations. Use of two ground stations necessitate incorporation of guard times into the TDMA telemetry return link transmissions. However despite this requirement all users can be accommodated on a single 60 MHz channel with only a 3 dB reduction in processing gain relative to the forward link.

COMPARISON OF CANDIDATE SPREAD-SPECTRUM WAVEFORMS

Among spread-spectrum waveforms, the viable candidates can be reduced to three generic forms with a continuum of variations and hybrids, namely stored-reference pseudorandom frequency hop, time hop, and phase shift keyed. Of these, phase-shift keying offers the simplest implementation for the Wideband Command and Control Modem.

For the Wideband Command and Control Modem (WCCM), a stored reference technique is recommended, i.e. one in which the spectrum spreading waveform (or the key required to generate the waveform) is stored at both the transmitter and the receiver. The uncertainties in the received waveform are thereby limited to start time, center frequency (due to Doppler and oscillator offset), and data content.

The three commonly employed generic waveforms for spread-spectrum are frequency hop, time hop and phase-shift keyed. Each of these is described briefly below.

Frequency Hop – In simplest form, frequency hop (FH) involves the transmission of a sequence of short contiguous pulses of discrete frequencies as indicated in Figure A. The pulse element bandwidth, which is inversely related to the element length, is much less than the spread channel bandwidth. For uncoordinated FH, the element length is normally selected to be shorter than the information bit length to reduce the loss due to coincidence of frequencies from two separate transmitters. However with sufficient data encoding, the bit rate and element rate may be approximately equal, as in the TATS system.

Time Hop – A time hop (TH) waveform, as shown in Figure B, is distinquished by short pulses of energy with relatively large off periods. The pulse repetition rate is normally much higher than the information bit rate but clearly for a fixed information rate and a constant energy per bit, the peak power must be increased in inverse proportion to the duty factor.

Phase-Shift Keyed – Phase-shift keying (PSK) is the most commonly employed modulation for spectrum spreading. As in TH, the element length in PSK determines the spread bandwidth. However, the PSK pulses are contiguous, as shown by Figure C.

The three basic waveform types described above are representative, but many variants exist. For example, continuous phase-shift modulation might be substituted for the discrete switching of the PSK modulation. Also, more complex waveforms (such as a frequency chirp) could be substituted for any of the elemental pulses.

Comparisons – Discussion of the performance of these schemes under various ECM conditions as well as discussion of the feasibility of employing the techniques on the various WCCM links are deferred to the next topic. With regard to their implementation, it can be stated that the PSK technique offers, in general, the simplest implementation. PSK does not require the multiple frequency generation, as in FH, or the high peak power, as in TH.

29170-3

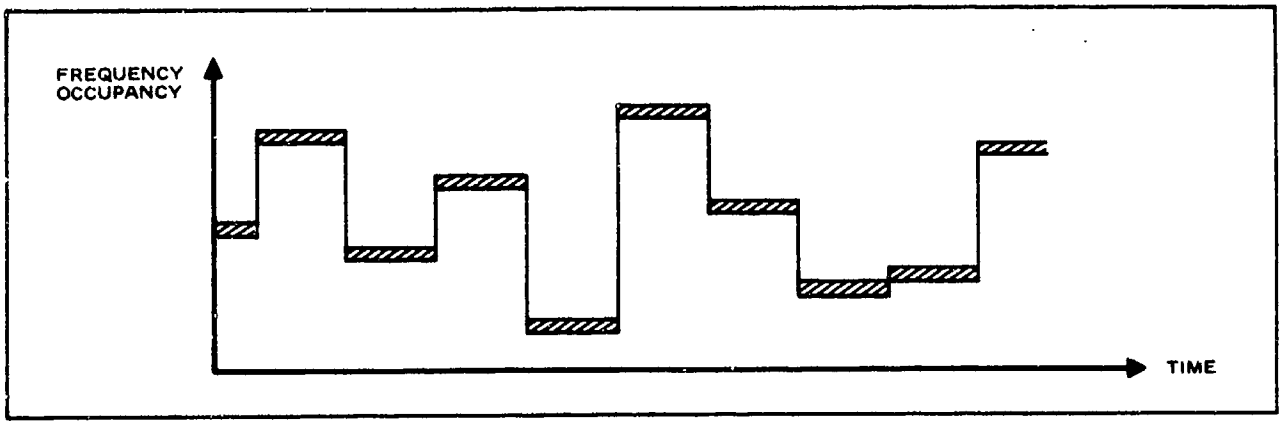

Figure A. Frequency Hop Concept. One of a set of discrete frequencies is transmitted in each time interval.

29170-4

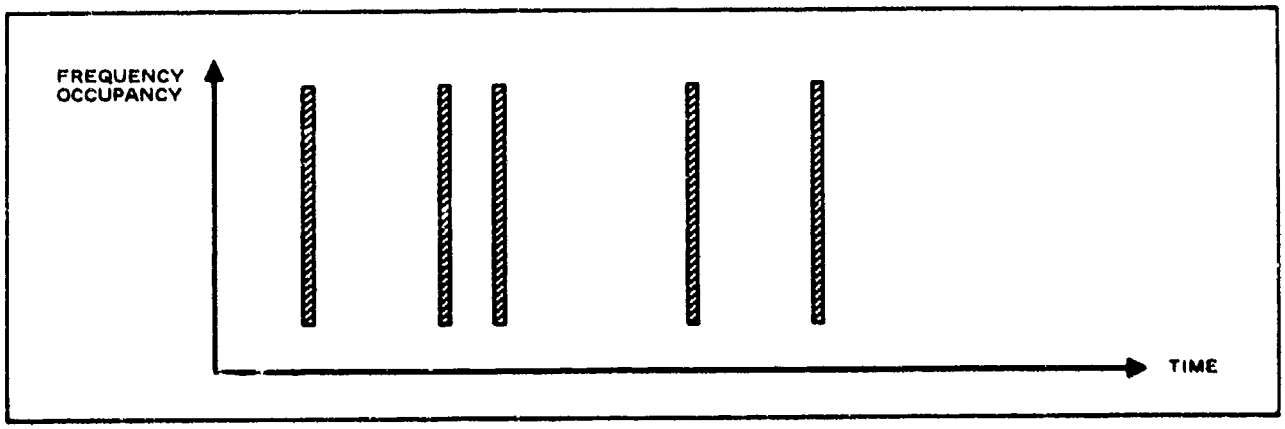

Figure B. Time Hop Concept. Short, full-bandwidth pulses are transmitted with a low duty factor.

29170-5

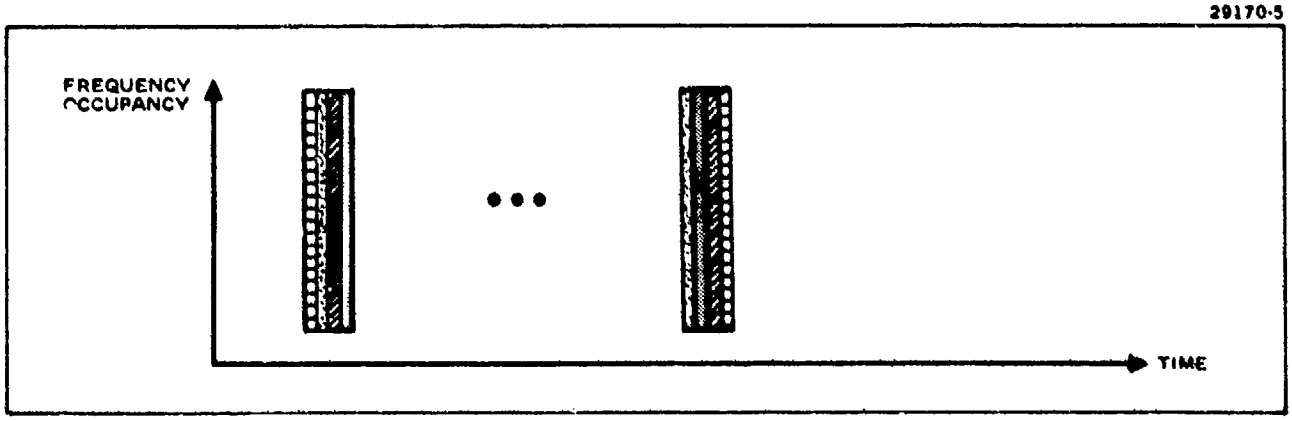

Figure C. Phase Shift Keying Concept. One of a set of four phase values is randomly selected for each time interval.

TRADE-OFF BETWEEN PARTIAL AND FULL OCCUPANCY MODULATION TECHNIQUES

Frequency hopping and time hopping were rejected because of deficiencies in anti-jamming performance, inferior performance in Gaussian noise, and excessive compexity implications on the RCV hardware.

Optimum forward and return link transmission schemes not only must accommodate all ground-RCV information transmission and furnish the necessary multiple access properties on the return link, but also must sensibly use the frequency spectrum and transmitter power. Spectral utilization becomes important when potential sources for interference are considered while anti-jamming protection is provided concurrently.

The discussions in the previous topics of forward and return link transmission schemes are closely associated with the selection of ECCM techniques for the forward and return links although this fact was not stressed explicitly. Before arriving at the recommended link schemes, the links were investigated from the ECCM aspect. For instance, the choice to employ continuous forward link transmission excludes pseudorandom time hopping as an ECCM technique applicable to the forward links. In this topic some general comparisons of ECCM techniques are discussed.

The applicable spread-spectrum modulation types can be subdivided into the two categories 1) partial-occupancy modulations and 2) full-occupancy modulations. The first group includes pseudorandom time hopping and psuedorandom frequency hopping, hybrid time-frequency hopping and hybrid frequency hopping-PSK. The full-occupancy modulations are represented by various direct-sequence phase-shift modulation schemes.

In order for a frequency hop system to have performance equal to a phase-shift keyed direct-sequence system, the hopping must be coherent, drastically complicating both the receiver and the transmitter. Even if noncoherent frequency hopping is used, the process of signal generation and decoding are in general more complex than for a PSK system.

From an ECM point of view, a simple frequency hop system in which the mark and space frequencies are chosen pseudorandomly is more susceptible to specialized forms of jamming than the direct sequence system. In particular, multitone jamming, in which the jammer concentrates most of its power in a few frequency slots, can be very effective. To counteract such a strategy, multiple hops per information bit must be used with noncoherent postdetection processing which degrades performance in a flat Gaussian noise environment.

If a large subset of the available frequency hopping tones is used by each receiver (on a pseudorandom basis), then anti-jamming performance and susceptibility to intercept are improved, but the receive equipment becomes very complex. If only a few tones are used by each receiver in order to decrease complexity, the signal becomes more susceptible to intercept, to signature analysis, and to multitone jamming.

A simple time hopping approach has some of the same difficulties as the frequency hopping approach: it is characterized by a high peak power, low duty cycle, wide bandwidth signal, and it is very susceptible to intercept and specialized forms of jamming such as short pulse burst jamming.

As was discussed in a previous topic, to maximize the forward link communications reliability, the maximum amount of signal energy should be available to the RCV for acquisition and maintenance of received signal synchronization. This objective in conjunction with the emphasis on RCV equipment complexity, viewed from the performance considerations already stated,

indicate that time or frequency hopping does not possess any distinct advantage over a direct sequence approach for the forward link.

Because of the high composite return link data rate (in excess of 100 Mbps), it is not feasible to apply a common ECCM technique for the combination of video and telemetry transmissions. Treating the return link video and telemetry transmissions separately, because of the high data rate of the video itself, it is clear that no practically implementable ECCM technique will furnish a large amount of protection to the video transmissions. The high rate of the video data also implies that the video transmissions should employ a modulation technique furnishing the maximum amount of noise immunity attainable, an implication which makes continuous transmission direct sequence phase modulation the best choice for the video links.

The complexity associated with implementation of a frequency hopping system for the return link telemetry is compounded by the large number of RCVs. A very large number of frequency hopping tones is required, and the circuitry for coordinating the frequency hopping among the RCVs to avoid mutual interference is complex. Utilization of frequency hopping in combination with time division multiple access or the use of time hopping would alleviate some of the complexity associated with straight frequency hopping but would introduce other implementation problems. The complexity of these hopping schemes and their lack of any performance improvement over a direct sequence phase modulation technique were grounds for their rejection.

There is one interesting aspect associated with the hybrid frequency hopping-PSK scheme. Depending on the jammer assumptions, this scheme may have some merit when employed on the return link video, which basically exhibits no useful processing gain at video rates of 20 Mbps. By hopping at a slow rate, for instance at 1/30- or 1/60-sec intervals among the five video channel frequencies, it is possible to realize a limited amount of gain. The concept, however, was not pursued further since it was concluded that the situations where one could depend on obtaining gain were too hypothetical and restrictive.

PERFORMANCE LIMITATIONS OF NONCOHERENT FREQUENCY HOPPING AND TIME HOPPING (FH AND TH)

Performance Area	Evaluation (Compared with Direct Sequence PN)
AJ Performance	FH and TH are more susceptible to specialized forms of jamming (such as multitone or short-pulse burst jamming). Performance against Gaussian flat noise is poorer.
Interceptibility	FH and TH are more susceptible to intercept than direct sequence because of higher radiated power density and more pronounced signature.
Equipment Complexity	Signal generation and decoding are more complex for frequency hopping systems, in general.

EVALUATING SPREAD-SPECTRUM SIGNAL TYPES

A comparison of applicable spread-spectrum, phase-shift keying techniques indicates that the most effective form of jamming signal is center frequency continuous wave. There are, however, not sufficient differences in their relative susceptibility to specify an absolute selection.

It was concluded in the previous topics that a direct-sequence, phase-modulation technique provides the optimum combination of communication performance and hardware simplicity for both the forward and return links. The most popular approach in the past has involved the use of 2-PSK modulation of the carrier by the pseudo noise (PN) code mixed with the data. The 4-PSK modulation technique has been used to a lesser extent, mainly because of the additional receiver complexity. One additional phase modulation technique which has been employed by Hughes and found to possess several desirable characteristics for spread-spectrum applications is the binary continuous phase-shift modulation (2 CPSM). Other direct-sequence phase-modulation schemes can be devised, but the three techniques mentioned represent the known schemes applicable to the WCCM program.

Since jamming represents a serious threat for the WCCM application, it is of interest to determine the susceptibility of these forms of modulation to different jamming signals. The types of jamming signals considered were 1) continuous wave (CW) at the center frequency, 2) CW offset by one-fourth the keying rate, and 3) broadband gaussian noise. A review of other jamming signals revealed them to be either equivalent to the three types considered or less effective. For example, phase modulation by noise near the center frequency is nearly as effective as center-frequency CW against 2 CPSM, while any amplitude modulation is slightly less effective.

The resultant analytical expressions for signal-to-noise improvement factors (or jammer-suppression factor), if matched-filter reception is assumed, are shown in the table on the facing page. The parenthetical entries in the table were derived by comparing the signal-to-noise improvement factors for equal-bandwidth operation. Thus, the chip time of 2 CPSM was taken to be two-thirds of that in the PSK modulation design. This division resulted in equal bandwidths and data-bit integration times for the three modulation types being compared.

The case of a centered CW jamming signal against 4-PSK modulation was taken as the 0-dB reference. The numbers in parentheses thus refer to relative receiver performance for the specified jamming signal. Two numbers appear when performance depends on the relative phase angle of the CW jammer. The first number refers to the average signal-to-noise improvement for a totally random phase angle, while the second refers to worst-case improvement (jammer phase perfectly aligned).

The table entries show two things. First, in the presence of white gaussian noise, all three modulation types result in the same signal-to-noise improvement factor. Since matched filter reception is assumed for all three, this result is to be expected. Second, CW jamming is more effective than broadband jamming and, on the average, centered CW jamming is the most effective.

In conclusion, it should be noted that from a susceptibility standpoint alone the three modulation types considered do not differ from one another sufficiently so that a clear choice of modulation type can be made. Therefore,

other operational considerations such as ease of implementation, low detectability, code tracking capability, and minimum sidelobe level must be included in the selection process. These aspects will be discussed in the next topic.

COMPARISON OF DIRECT-SEQUENCE PHASE-MODULATION SCHEME JAMMER SUSCEPTIBILITY

Jammer Type	Modulation Type		
	2-PSK	4-PSK	2 CPSM
Centered CW $W_{jam} = W_o$	$\frac{N_k}{\cos^2\phi}$ (0, -3 dB)	$2N_k$ (0 dB)	$2N_m \cdot \left(\frac{\pi}{4}\right)^2$ (-0.3 dB)
Offset CW $(W_{jam} - W_o) = \pm \pi/(2T)$ T = Chip Time	$\frac{\pi^2 N_k}{4}$ (+0.9 dB)	$\frac{\pi^2 N_k}{4}$ (+0.9 dB)	$\frac{N_m}{\cos^2\phi}$ (+1.75, -1.25 dB)
White Gaussian Noise	$2N_k T_k B$ (+3 dB)	$2N_k T_k B$ (+3 dB)	$2N_m T_m B$ (+3 dB)

Where

N_k = Number of PN chips for PSK modulation

N_m = Number of PN chips for 2 CPSM modulation = (3/2) N_k

T_k = Chip time in PSK modulation schemes

T_m = Chip time in 2 CPSM modulation scheme = (2/3) T_k

B = Broadband noise jammer bandwidth

ϕ = Relative phase angle between CW jammer and signal during chip interval

SELECTING THE MODULATING WAVEFORM

A comparative evaluation was performed on three spread-spectrum, phase-shift, modulation schemes for the WCCM application. The selected technique, viz., binary continuous phase-shift modulation (2 CPSM), not only provides the most efficient performance but also possesses a power spectrum which minimizes adjacent channel interference.

It was concluded in the previous topics that pseudonoise phase modulation represents the most suitable modulation technique for the WCCM application. The three phase modulation techniques chosen for detailed trade-off analysis were 2-PSK, 4-PSK, and 2 CPSM. The first two are well-known basic techniques, while 2 CPSM denotes binary continuous phase-shift modulation, in which phase shifting occurs continuously rather than discretely (see Appendix A). The latter was included in the comparison because of some very attractive porperties of this scheme.

For facility in comparing the performance of 2-PSK, 4-PSK, and 2 CPSM modulation schemes, several parameters had to be equal. Identical 3-dB signal bandwidths were assumed. Furthermore, the message error rate, together with the energy per bit to noise density ratio (E_B/N_0) required for equal performance in a benign environment was fixed for all three modulation schemes. This step could be taken since all three schemes provide optimum E_B/N_0 performance. The table summarizes the modulation trade-off for the set of pertinent performance criteria.

The jamming susceptibility characteristics of the three modulation techniques were discussed in the previous topic. With respect to their susceptibility to worst-case jamming for each case, and by using 2-PSK as reference, the 4-PSK modulation may exhibit as much as 3 dB more protection, while 2 CPSM will exhibit performance up to 2.7 dB better than 2-PSK. The disparity in performance between 4-PSK and 2 CPSM is insignificant, consequently other factors must be considered to select the modulating waveform.

Intercepting a 2-PSK signal is easiest because of the double sideband structure and the man-made appearance of the biphase keying. A 4-PSK signal has similar spectral power density, but its four phase positions render it more "noise-like." Similarly, the continuously varying phase in the 2 CPSM modulation method will look less man-made than biphase keying in the 2-PSK and, therefore, less detectable.

One disadvantage in practical implementations of biphase modulation, and to a lesser extent quadrature modulation, is that it is subject to sideband re-creation. This condition results from the nonconstant amplitude characteristics of their time waveforms. When a nonlinear circuit (limiter, nonlinear amplifier, etc.) is used to process a signal with zero crossings in the envelope, sidebands will be regenerated even though they may have been completely filtered out prior to the nonlinearity. The 2 CPSM waveform on the other hand, being characterized by constant amplitude and continuously shifting phase, does not exhibit this property.

The dc-power input comparison indicated in the table is related to the sideband re-creation trade-off. Again, because of the constant amplitude nature of the 2 CPSM envelope, a much more efficient transmit amplifier (Class C) can be employed in processing the signal.

One significant advantage of 2 CPSM when compared with other phase modulation schemes lies in that the spectral sidelobe level of 2 CPSM is much lower, assuming the 3-dB bandwidths of the systems to be the same. The spectra of 2- and 4-PSK techniques have comparable sidelobe structures, the power spectrum varying as $(\sin x/x)^2$. The sidelobes of 2 CPSM, however, decay as $(\sin x/x)^4$, implying that 2 CPSM contains much less energy in the sidelobes.

Translated to the WCCM application, this observation means that utilization of 2 CPSM will result in less adjacent channel interference, a fact which is a key consideration in the light of the selected WCCM return link transmission scheme.

The precision with which the received signal can be tracked depends primarily on the shape of the correlation function of the spread-spectrum modulation. The shapes of the correlation error functions for both PSK techniques are identical triangular waveforms, while the shape of the 2 CPSM autocorrelation function is such that for a delay-lock loop tracking implementation, the loop tracking error function has a slope of greater magnitude near the zero crossing than for 2-PSK or 4-PSK. This implies that the 2 CPSM provides improved tracking and time of arrival (ranging) estimates.

An important area for comparison is equipment complexity. The transmitter implementations for all three of the modulation schemes are relatively simple and essentially comparable. The receiver for the 4-PSK system or the 2 CPSM system is more complex than the receiver for the 2-PSK system because of the quadrature signal components. However, the 2 CPSM receiver is slightly less complex than the 4-PSK receiver since PN code pattern removal, data integration and decisioning, and tracking in the 2 CPSM receiver can be implemented as in a 2-PSK receiver.

In conclusion, although the differences among these modulation schemes in any given category are small, all the minor points add up to a definite recommendation to incorporate 2 CPSM as the WCCM spread-spectrum modulation techniques.

TRADE-OFF AND SELECTION OF
WCCM SPREAD-SPECTRUM MODULATION TYPE

Criteria	Evaluation*		Selection
	4-PSK	2 CPSM	
Adjacent Channel Interference	0	+	2 CPSM
Side Band Re-Creation	+	++	2 CPSM
Transmit DC-Power Input	0	+	2 CPSM
E_B/N_o Worst-Case Jammer Modulation	++	+	4-PSK
Complexity:			
Transmitter Implementation	0	0	0
Receiver Implementation	-	-	2-PSK
Signal Tracking Capability	0	+	2 CPSM
Ease of Intercept	+	+	4-PSK/2 CPSM

LEGEND: - poorer, 0 equal, + better, ++ best

*Evaluations are referenced to 2-PSK.

PERFORMANCE COMPARISON BETWEEN COSTAS LOOP AND GATED CARRIER PHASE TRACKING

The difference in performance between the Costas loop and the gated carrier phase tracking schemes is so small from a practical standpoint that the decision as to which technique to use should be based on other considerations.

The proposed modulation scheme for WCCM is 2 CPSM with a coherent (as contrasted with differentially coherent) method of detection. The 2 CPSM modulation scheme, like PSK, possesses a continuous spectral density, preventing direct extraction of a reference carrier. Thus one of the two basic approaches for creating a carrier reference at the receiver must be employed. One approach is based on nonlinear operation and includes the Costas loop and the mathematically equivalent squaring loop methods. The second approach makes use of a subcarrier, transmitted together with the data signal in such a manner that the subcarrier can be extracted without interference from the modulated signal.

A practical way to implement the subcarrier tracking method is to use the gated carrier approach. This method is the recommended carrier regeneration approach for WCCM and is implemented in such a way that at predetermined times a portion of unmodulated carrier signal is gated into the phase lock loop. In the WCCM application, the predetermined times were chosen to be locked to the PN pattern with the duration of every sixth chip representing a gated carrier pulse. In addition, the occurrences of the gated carrier chips are locked to the PN generator frame timing, removing the necessity of a sync search between the transmit and receive gated carrier chip timings. The gated reference contains only carrier information and does not transmit any other information.

The theoretical performances of subcarrier tracking (gated carrier) and Costas loop or the squaring loop are compared in the facing table on the basis of providing an error rate of 10^{-2} and 10^{-5} for three transmission rates. Although 2400 bps signaling speed is included, the performances at 12 and 60 kbps are considered as the key functional modes for the WCCM, and the region determined by these two rates should be used in evaluating the relative quality of two approaches. The comparison is based on the work by W. C. Lindsey*, and on employing a phase lock loop with a loop bandwidth of 100 Hz, which is sufficient for an optimum second order loop to track a linear frequency rate-of-change of 4 kHz/sec. The latter figure represents the maximum Doppler change for WCCM, assuming a 10 GHz transmission frequency and 12 g maximum acceleration. Another assumption is that one-sixth of the composite power is allocated to the gated carrier tracking function.

The results show that the difference between the two techniques for carrier reference recovery is negligible in the region of interest but slightly in favor of the Costas loop scheme. Taking into account the additional performance degradation resulting from the differential data encoding process required to resolve the 180 degree phase ambiguity associated with this technique, the two approaches are from a practical standpoint about equal. This consideration is

*"Phase-Shift-Keyed Signal Detection with Noisy Reference Signal," IEEE Transaction on Aerospace and Electronic Systems, Vol. AES-2, No. 4 (July 1966).

stated just for the sake of completeness and is not included in the comparison table since the degradation pertains to bit error probability; its impact on a system transmitting information in form of message blocks depends on the error correction/detection code being employed.

The choice of the ratio between the subcarrier sync power and total power of one to six for the WCCM application represents a compromise between implementation simplicity, performance and tracking capability. Although allocation of a smaller fraction of the total power into the subcarrier sync would have resulted in a few tenths of a dB improvement at error rates permitting quality data decisioning, the system operational advantages would be more than offset by the higher probability of loss of phase lock during fades and of other circumstances causing a temporary short-term decay in the received signal power.

It should be noted that the performance difference indicated in the table applies only to an ideal lossless implementation. When implemented in a practical manner by using digital circuitry, the implementation loss associated with the Costas loop is expected to exceed by about 1/2 dB the loss associated with the gated carrier technique (refer to the next topic). Thus the resulting performance difference is reduced to less than one-half dB, a difference that can be ignored in a practical system. The complexity, however, of the Costas loop implementation (also discussed in the next topic) strongly surpasses the complexity of the gated carrier scheme, a fact which leads to the adoption of the the gated carrier technique to perform the phase tracking functions for the WCCM.

COMPARISON BETWEEN GATED CARRIER AND
COSTAS LOOP PHASE REFERENCE TRACKING METHODS

P_e	Data Rate (Kbps)	Theoretical Loss (in dB) of Ideal Implementation Relative to Optimal Coherent Reception Performance	
		Gated Carrier	Costas Loop
10^{-2}	60	0.8	Negligible
	12	0.8	Negligible
	2.4	1.3	≈0.5 dB
10^{-5}	60	0.8	Negligible
	12	0.[illegible]	Negligible
	2.4	0.9	≈0.1 dB

IMPLEMENTATION COMPARISONS BETWEEN COSTAS LOOP AND GATED CARRIER PHASE TRACKING

Comparison of the two candidate phase tracking schemes with regard to implementation complexity and performance favor the gated carrier technique for the WCCM application.

As was concluded in the previous topic, the difference in performance between the Costas loop and the gated carrier approaches to signal phase tracking is, from a practical standpoint, so minor that the decision as to which scheme to adopt for the WCCM application should be based on other considerations. This topic compares the implementation differences of the techniques and the impact of suboptimal implementation on the transmission performance.

A block diagram representation of the two schemes is shown in the figure on the facing page. The phase tracking loops are shown connected in parallel to the 2 CPSM demodulator to facilitate comparison. The 2 CPSM demodulator is ignored in this topic since its implementation impact is common to both approaches.

The only functions, excluding the loop filter and the VCO, required to implement a gated carrier tracking scheme in a spread-spectrum system are a time controlled gate and a PN pattern removing exclusive-OR circuit. The control driving the gate operates in synchronism with the PN pattern generator. (In the WCCM application the gate is activated on every sixth PN chip.) A similar gating function is included in the transmitter for incorporation of the gated carrier into the modulating data sequence.

The Costas loop implementation in the receiver on the other hand, requires two PN pattern removing exclusive-OR circuits, two filters with bandwidths on the order of the data rate, and a multiplier. Although a minor consideration, the Costas loop requires incorporation of differential data encoding or some other scheme to resolve the data polarity problem resulting from the phase ambiguity inherent with the Costas loop. This function is not shown in the figure.

Multipliers by nature are considerably more complicated than linear circuits. In order to avoid excessive degradation at low signal-to-noise ratios, where degradation is most critical, the multiplier circuit becomes very complex in both analog and digital forms of implementation.

The filters must have adjustable bandwidths to enable the WCCM receiver to operate at various data rates, or a degradation in the performance will be realized. Thus either a bank of analog filters or a variable bandwidth digital filter is required. The former approach can be eliminated since its use would be inconsistent with the emphasis on maximum simplicity in the RCV hardware and on the objective of maximum use of digital implementation. Even the complexity of digital filters is such that the only reasonable implementation of a variable bandwidth filter is to use a summer, with the bandwidth selection accomplished by varying the number of samples over which a sum is formed.

The gated carrier scheme operation is fully independent of the data rate. Thus, the loop can be designed to optimally function in all modes of transmission, requiring no adjustments when a mode change is performed.

In the Costas loop, however, the bandwidth of the filters must be adjusted to match the bit data rate for the loop to furnish the performance indicated in the previous topic. In a practical implementation, this variability in bandwidth not only increases the filter complexity but also imposes incorporation of gain adjustment features required to maintain the multiplier operating in the amplitude region that provides the best performance. Also there are practical problems in the design of a multiplier where the output dc bias must be kept very small. In a phase lock loop, a bias term has the effect of offsetting the phase tracking. Allowing for all of these design considerations, the Costas loop is expected to suffer about a one-half dB higher implementation loss than the gated carrier scheme.

One additional disadvantage associated with the Costas loop is the possibility that the carrier loop may lock onto a sideband under certain circumstances. The likelihood of this occurring in a system like WCCM, where the Doppler offset can exceed the data rate, is quite high. This event can generally be detected and corrected when phase lock is derived over very long messages. In the burst TDMA return link mode, however, this assumption is far from being valid.

A secondary advantage of the gated carrier scheme is that the implementation of the PN code tracking function is simplified in that no data decisioning or absolute value functions need be incorporated into the tracking loop.

In conclusion, although the Costas loop is slightly superior on a theoretical basis to the gated carrier approach, the latter was adopted for the WCCM application because the gated carrier is considerably less complex to implement.

32138-5

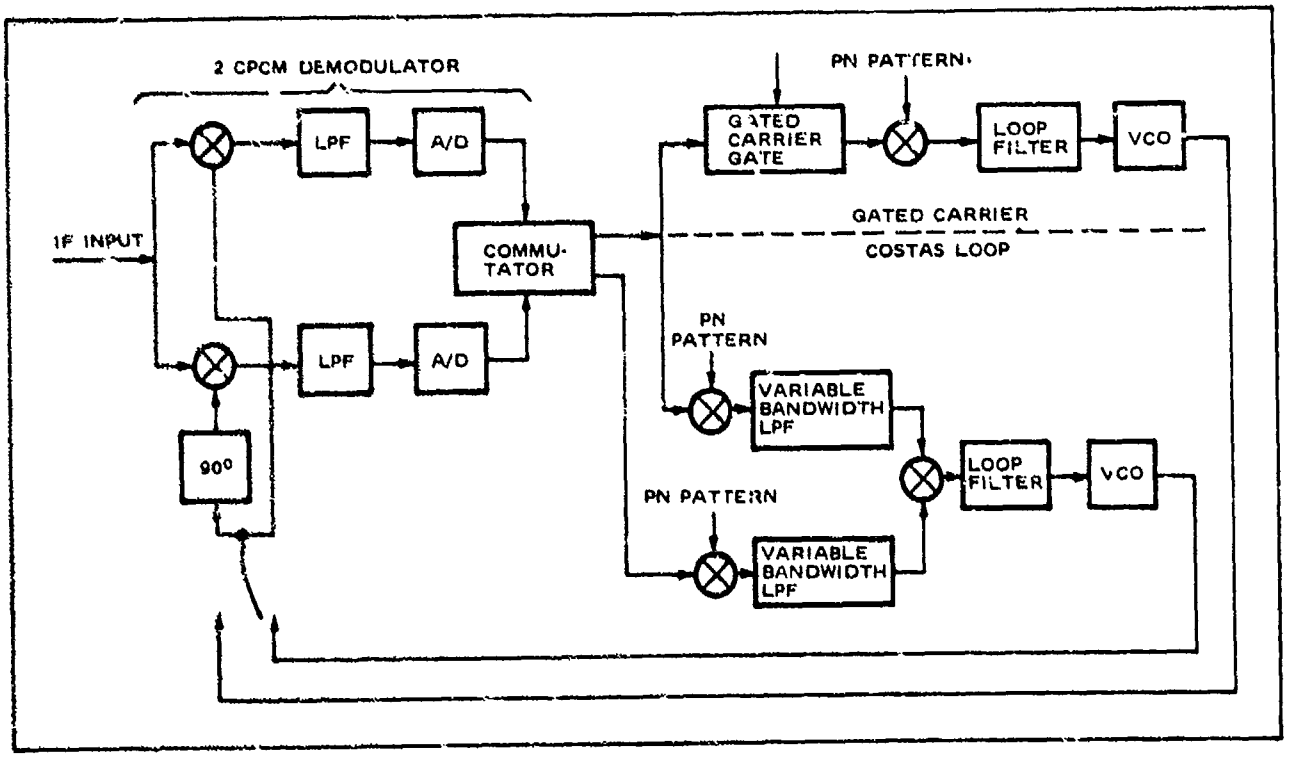

Implementation of Costas Loop and Gated Carrier Phase Tracking Schemes in a 2 CPSM Spread-Spectrum Modulation System. In comparison to the gated carrier scheme the Costas Loop requires complex operations which in a practical implementation incur a implementation loss of about one-half dB over the loss associated with the gated carrier implementation.

FORWARD LINK MESSAGE TIMING STRUCTURE DESIGN CONSIDERATIONS

Control of a remotely piloted vehicle requires as many as 10 commands per second. In order to satisfy more general system requirements and improve ECM resistance and communication reliability, it is desirable to have two to three times this update capability.

The second step after having chosen the forward link transmission scheme to employ a single channel with continuous structure, which is subdivided into a number of message slots for providing time division multiple access to the RCVs, is to determine the length of each access. The alternatives are to use bit-by-bit, character-by-character, or block-by-block transmission, where the word "block" refers to an access length not equaling a bit or a character. Character length access can readily be dismissed since the commands are not text-oriented but consist rather of variable field-length digital data. Bit-by-bit transmission, wherein sequential single bits are transmitted to the different RCVs, is too rigid a structure and can not furnish the advantages (mentioned later) of a block transmission structure. The problem of selecting the optimum block length is tied in with the access rate for a given desired data throughput to each RCV per second. The choice was made as a result of the following considerations.

The Wideband Command and Control Modem should be applicable to a general class of unmanned, remotely controlled vehicles requiring rapid response. Within a given class the design should also be flexible in order to apply to a wide range of deployment levels. As generally applies to the design of communications systems, the communications link must not slow down the overall system performance speed. Studies have indicated that 10 commands per second are sufficient to control an RCV, even during the most active phases of the mission. Since this number assumes that each control command is received and successfully demodulated by the controlled vehicle, the communications system should permit transmissions at a rate of two to three times the number stated in order to account for rapid variations in the propagation effects and to counter an adversary employing ECM tactics. Thus a rate of two to three times the given number is desirable, leading to the selection of a frame rate of 30 frames/sec. This frame rate results in an 80-bit block length when combined with a 2400 bps transmission rate to each RCV. This message block length, has been determined to represent a desirable length as far as permitting incorporation of the various command functions is concerned. It should be noted that the selected length does not prevent the transmission of longer messages. By proper message header, the user can transmit any message length by subdividing the message into blocks fitting into the 80 bit length structure.

The structure of one frame of the chosen forward link transmission scheme is shown in the figure opposite. The mode shown represents the nominal forward link mode, having 25 message slots/frame. Each message slot contains 80 bits. The number of blocks into which the 1/30-sec frame is subdivided is variable and can be chosen to suit a particular mission, an arrangement which permits better utilization of available signal power and adds processing gain.

The 80-bit block consists of a 6-bit address, 64 bits of data, and 10 bits for error detection coding. (The error detection code is discussed in a subsequent topic.) The address of the destination RCV is included in each forward link message to permit the ground station data source to make a decision on the priorities of messages to be transmitted. The alternate approach would be to employ a fixed time slot assignment structure wherein one message slot is assigned for every RCV per frame. Even if it is possible to make the latter

approach flexible to a limited extent by incorporating a time slot reassignment capability, the only advantage of this scheme lies in that no message address overhead is required, a negligible advantage that is readily defeated by the significant benefits of an addressable system. First, the message addressability enables the ground control to make maximum use of the forward link resources in that the traffic can readily be adjusted to suit the evolution of the mission. Secondly, when used in combination with positive acknowledgement, the addressing capability allows simple adaptation to high raw error rate conditions, improving the performance under ECM and poor signal-to-noise ratio conditions. Positive acknowledgement refers to the fact that the return link telemetry message from an RCV contains information on the event of this RCV's receipt of a correct message subsequent to its last previous return link burst transmission.

Depending on the content and priority of the forward link message, the ground station may continue to transmit the messages until the acknowledgement has been received. It is very difficult to relate the advantages of this feature to an equivalent signal-to-noise improvement for realistic deployment situations, because in a dynamic system the content of the command message may change even if the commands are not received by an RCV. This fact constitutes the difference between the positive acknowledgement concept and the basic automatic retransmission request technique (ARQ), in which the same message is repeated until acknowledgement of reception is obtained. The value of this concept should, however, be obvious. The feature also defeats any attempt by a jammer to selectively jam a given forward link.

29266-60

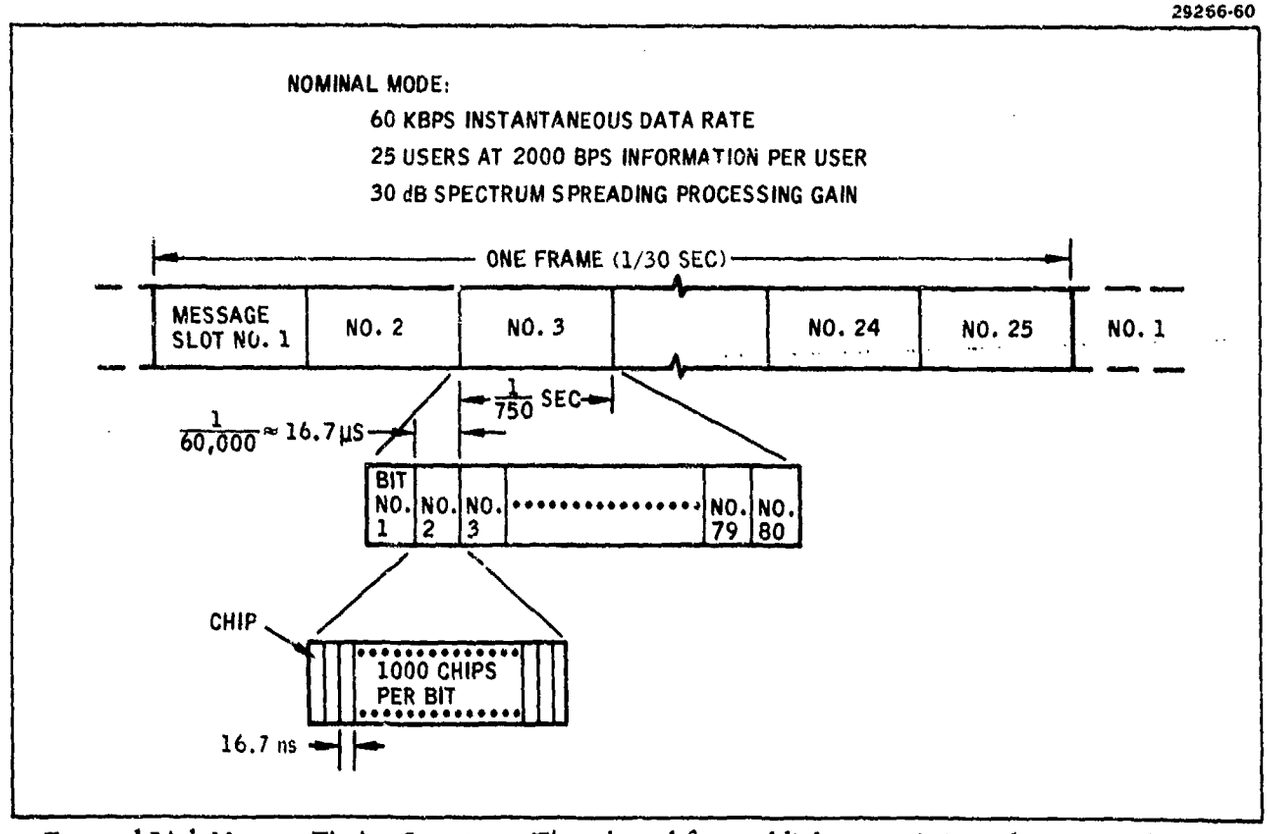

Forward Link Message Timing Structure. The selected forward link transmission scheme can adapt to a particular mission and provides better utilization of available signal power.

RETURN LINK MESSAGE TIMING STRUCTURE DESIGN CONSIDERATIONS

Use of a TDMA return link burst rate of 60 bursts per second per RCV improves the effect of positive acknowledgement and makes possible interburst PN code tracking without a search in the beginning of each burst.

In order to fully realize the potential advantages of the positive acknowledgement concept, the return link should employ a transmission rate per RCV exceeding the forward link frame rate, i.e each RCV should transmit more than once per forward link frame. If this is not the case, the ground control will have to wait a full frame length for each successive "valid message received" confirmation. Even if the message addressability feature furnishes performance benefits under this condition, much of the power of the addressability/positive acknowledgement combination is not being fully obtained.

The figure in a previous topic ("Selection of Return Link Channel Parameters") indicates that an RCV transmit rate of either 60 or 90 transmission per second per RCV for 27 and 24 dB processing gain, respectively, provides an average guard time of 0.3 milliseconds in a system keyed at 60 Mchips/second. The 60 transmissions/second approach was selected because of its 3-dB processing gain advantages and the slightly simplier implementation.

The major advantage of a transmission scheme wherein each RCV transmits 60 times per second (or more) is realized in the code tracking scheme, in that the high transmission rate enables code tracking when 2 CPSM modulation is used, without the necessity of a search in the beginning of each burst in the TDMA mode.

The structure of the return link timing is shown in Figure A. One 40-bit block is transmitted per half-frame or per 1/60 second. In order to maintain nomenclature consistency with the forward link, the term "frame" refers to the frame duration of the forward link frame, equaling 1/30 second. The figure shows only the maximum RCV deployment structure. Reduced modes, furnishing improved performance, are shown and discussed in the next section.

When an RCV operates in the video transmission modes, the video and telemetry are multiplexed in accordance with the timing structure shown in Figure B. The structure is rigid with regard to the video, telemetry, and gated carrier chip pattern sequence and does not depend on the video data rate. The integration times in the ground receivers are adjustable, providing freedom in the selection of the video data rate. The significant advantage of this "equally distributed" multiplexing approach is that no storage for video data is required, as would have been the case if the telemetry data were transmitted on a per telemetry data bit basis, for instance.

29266-63

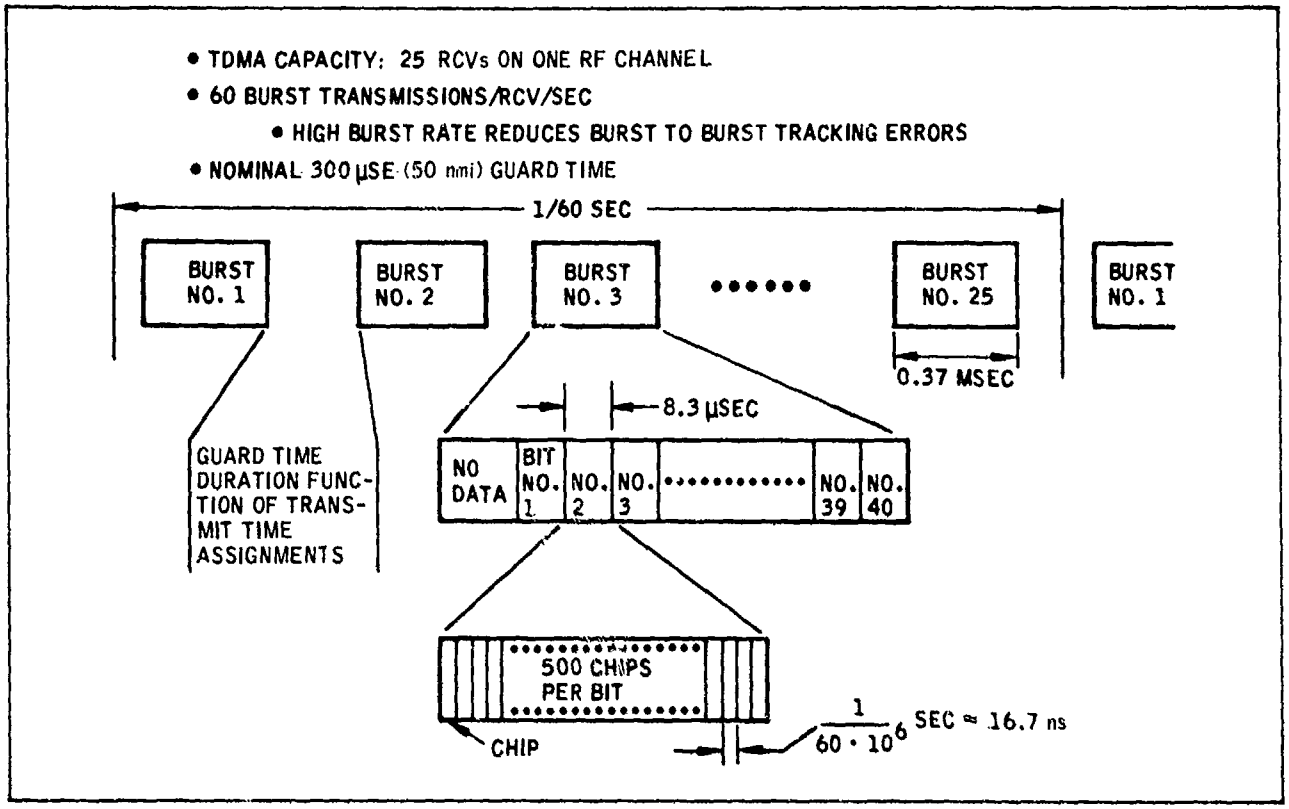

Figure A. TDMA Mode Return Link Message Timing Structure. This figure illustrates only the maximum RCV deployment.

29266-64

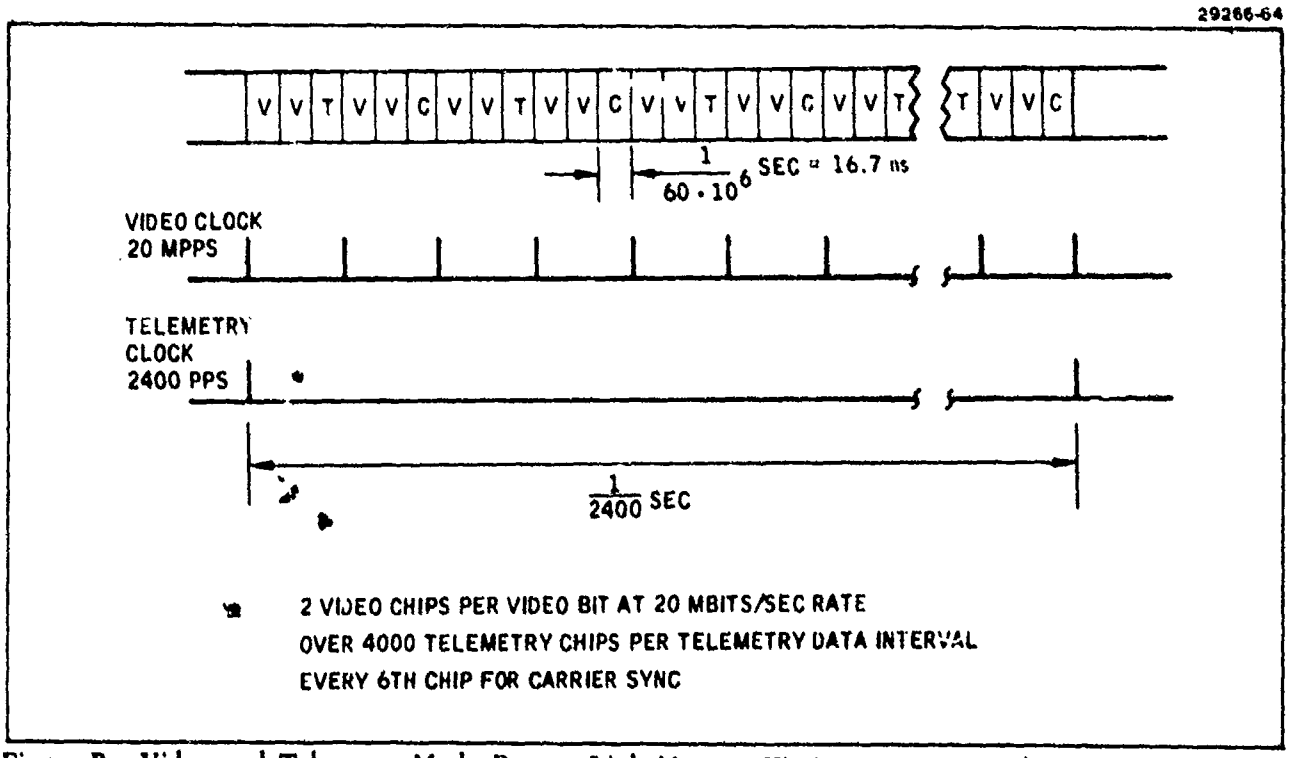

Figure B. Video and Telemetry Mode Return Link Message Timing Structure. This equally distributed multiplexing approach eliminates the need for storage for video data.

SELECTING THE PSEUDO NOISE SEQUENCE LENGTH

The selection of the pseudo noise pattern length represents a trade-off between the speed at which synchronization is acquired, anti-jamming protection, cost, size, and weight. The selected 33 millisecond length (2 million PN code chips) is three orders of magnitude longer than the data interval.

In order to demodulate forward and return link data, proper pseudo noise (PN) code lock must be maintained. Therefore, the loss of modem synchronization due to temporary loss of signal from short term fading or to RCV flight behind terrain causing severe signal attenuation necessitates signal reacquisition. Since the RCV flight path is controlled from a Ground Control Station (GCS), it is imperative that fast reacquisition be performed. The PN pattern length selection for the WCCM was based on the above facts and the fact that the longer the selected PN pattern, the more difficult acquisition and reacquisition becomes. (Difficult in that it requires increased modem complexity to obtain the acquisition and reacquisition times comparable to that time required for a shorter pattern.)

While it is simpler to reacquire a short PN code sequence as opposed to a long one, short codes do possess two distinct disadvantages. These disadvantages are 1) an intercept station can more easily break the PN code and 2) a repeat jammer could record the signal over the pattern length duration and then retransmit it in a subsequent code interval for effective jamming or spoofing. Therefore, longer sequence codes provide better protection against jamming and spoofing. On the other hand, long PN code sequences result in increased cost, size, and weight due to the necessity of a parallel synchronous acquisition correlator for the necessary acquisition and reacquisition speed.

Since the major design constraints associated with the RCV modem includes cost, size, and weight; a long PN code cannot be justified. This fact is supported due to the extreme amount of cost, size, and weight impacts of using parallel synchronous acquisition circuitry (Refer to Review of Current State-of-the-Art Parallel Correlation Hardware Technology Topic.) Therefore some form of serial pattern search for acquisition must be used. The problem then remains to determine a PN code length that represents a length over which it is reasonable to search. There is a constraint on the minimum length of the PN pattern (which is clocked at 60 Mbit/sec). This constraint is due to the approximate 3 millisecond round trip propagation time associated with the specified 250 nautical mile RCV deployment range. Any PN code length less than approximately 180 kilobits could potentially result in range ambiguity resolution problems.

An optimum choice for the WCCM PN pattern length was determined to be 2 megabits. This length was chosen partly because its 30 millisecond cycle is long enough to force potential jammers to use costly, sophisticated hardware to record the resultant 2 million bit 60 MHz rate pattern for playback. The selection of a highly non-linear 60 megabit length PN pattern which is non repeating within a WCCM transmission frame interval results in an effective mean time to acquire (during a full search mode) of less than 20 seconds. Due to the use of a maximum code tracking adjustment rate in the RCV modem PN code tracking circuitry (which is in turn used to slew PN timing by 1/8 chip intervals per sample), spoofing would take a minimum of approximately two hours to effectively conduct a full PN pattern sweep. The 2-hour full PN pattern sweep requirement effectively negates any deceptive jamming threat. The 2 megabit PN pattern length also matches the selected frame intervals resulting in additional system benefits such as easy derivation of frame timing pulses for the selected ranging concept.

Use of a PN code length which is several orders of magnitude longer than the data interval very effectively eliminates the possibility of acquiring and falsely tracking any time sidelobe of the code. Short codes which repeat at or near the data interval can readily have aperiodic time sidelobes which allow a receive correlator to track the code with a mismatched time and/or frequency. In some systems this could result in false receiver lockup at high signal to noise ratios. However use of codes which are at least an order of magnitude longer than the tracking time constant eliminates these potential difficulties.

FACTORS AFFECTING PN CODE LENGTH

A medium code length has been selected which maintains acceptable acquisition times and effectively provides all of the long code advantages.

Long Code Advantages

- Eliminates Potential Tracking of Time Sidelobes
- Reduces Potential for Effective Repeat Jamming:
  - Simple Jamming
  - Information Deception
  - Range Gate Pull-Off
- Reduces Code Breaking Potential
- Eliminates Range Measurement Ambiguities

Short Code Advantages

- Shortens Time to Acquire PN Code
- Improves Processing Gain during Signal Acquisition
- Reduces Equipment Complexity
  - Size
  - Weight
  - Cost

SELECTION OF MODULAR PROCESSING GAIN INCREMENTS

Nominal values of spectrum-spreading processing gain increments of 1 or 2 dB assure near-maximum amounts of processing gain for any given number of users. Processing gain of up to 37 dB is to be provided on both the forward and return links.

The Statement of Work for the WCCM requires that the spread-spectrum modulation is to provide the uplink with a minimum of 30 dB of processing gain, and that modem multiple access capability is to be modular in the sense that if less than 25 RCVs are used, the waveform can be suitably adapted to provide additional processing gain for the remaining users. A further guideline used was that the modularity should be effective for any number of RCVs between 5 and 25.

With fewer than 25 RCVs, the command data rates on the forward link and the telemetry data rates on the TDMA return link yield reduced composite link data rates. However, processing gain per user can also be increased by reducing the instantaneous data rate per user (that is, more PN code chips per data bit) while the same average data rate per user is maintained. The question of what data rate step sizes and, therefore, respective spectrum spreading processing gains, should be used can be based on the concept of providing the maximum amount of processing gain proportional to the number of users being deployed. However, the economic feasibility of this concept does not totally justify its implementation. As a result, the specific data rate step sizes used must also be selected for implementation convenience. The forward and return link clock rates and message capacity tables shown on the opposite page reflect incremental data rate selections which provide the required processing gain modularity with negligible modem cost impact. It is highly desirable to obtain modular spectrum-spreading processing gain increments of 1 or 2 dB to insure that a near-maximum amount of processing gain is developed for the given number of users. This has been effectively achieved for both the forward and return links. The return link TDMA mode processing gain increments differ from the forward link gain increments because of the requirement that a 300-microsecond (50 nmi) minimum average guard time be used between the various return link bursts to prevent transmission overlaps.

The implementation convenience concept has been realized by using a low cost decade counter for the divisor function. This arrangement allows a minimum number of messages per frame of 5 and 4 for the forward and return links, respectively. One message per frame is equivalent to 2400 bps. When fewer than 5 vehicles are active, greater effective processing gain can be obtained by using multiple transmissions over the forward link. This time diversity approach is augmented by the RCVs ability for positive acknowledgment by which the GCS is informed of valid message reception by the RCV. This repeat message concept can – and should – be used in any of the data rate modes to increase the effective processing gain per user. This positive acknowledgment-repeat transmission technique is very effective in a fading signal or burst interference environment.

TABLE I. FORWARD LINK (UPLINK) CLOCK RATES AND MESSAGE CAPACITY

Divisor	Data Clock (Kpps)	Messages Per Frame	Spectrum-Spreading Processing Gain (dB)
1	120	50	27.0
2	60	25	30.0
3	40	16	31.8
4	30	12	33.0
5	24	10	34.0
6	20	8	34.8
7	17	7	35.4
8	15	6	36.0
10	12	5	37.0

TABLE II. RETURN LINK (DOWNLINK) CLOCK RATES AND TDMA MODE BURST CAPACITY

Divisor	Data Clock (Kpps)	Maximum* TDMA Accesses per Half Frame	Spectrum-Spreading Processing Gain (dB)
1	120	25	27.0
2	60	16	30.0
3	40	11	31.8
4	30	9	33.0
5	24	7	34.0
6	20	6	34.8
8	15	5	36.0
10	12	4	37.0

*Maximum accesses is with respect to maintaining a minimum average guard time per access of at least 300 microseconds (≈50 nmi)

SELECTION OF ERROR CONTROL APPROACH

The error control technique employed has been designed to emphasize minimum probability of accepting a false message. This could be accomplished by using a code with a high level of redundancy, but the recommended approach, based on message quality detection, is more efficient.

The critical factor in selecting an error control technique for a communication system for a remotely controlled pilotless vehicle system is the probability with which the communication system outputs a false message. The forward link is the most important of the two links, since this link carries action commands, including potential weapons release commands. However, the return link must also possess a high degree of reliability, since the generation of ground control commands is to an extent based on, and in response to, the RCV data received over the return link. It is recommended that the forward link should exhibit an error protection capability furnishing a probability of false message transfer not exceeding 10^{-8}, while a value of 10^{-5} for the same parameter should suffice for the return link. Naturally these capabilities should be accompanied by a reasonable probability of correct message detection to avoid excessive sluggishness in the system response.

These values can be obtained with a variety of error detection/correction schemes. In order to make maximum use of signal power, the scheme selected for WCCM provides the desired reliability by using a combination of an error detection code and message quality detection. The positive acknowledgement concept and the forward link message addressability provision add to the effective over-all message detection probability, because they enable the ground control to intelligently allocate its transmission resources as function of the priorities of the commands to the various RCVs.

The lengths of the error detection codes (number of parity bits) were chosen to be 10 bits for the forward link and 5 bits for the return link, applied to the 70 and 35 bit message block lengths of the two links. The specific structures of the codes were not selected, but the codes will be linear codes. Linear codes are rapidly generated and detected by a feedback shift register structure.

Message block oriented code as opposed to a convolutional type code was chosen due to operational considerations. Even though the convolutional codes are more powerful, they involve a decoding delay. Convolutional codes also involve a significant penalty in the implementation complexity of the decoder.

Considering coding alone, the 10 bit error detection would furnish the forward link with a protection against false message acceptance of about 10^{-3} in a random noise environment. More exactly the false message probability is nearly 10^{-5} against random noise, since the forward link employs a 6-bit address, the satisfication of which is also a prerequisite for message acceptance. The benefit of the address is ignored however, since the dependence of it would limit the generality of the claims of the over-all error control scheme, when considering a limited signal bias or fading.

The forward link false message probability (i.e., that random noise will cause the RCV to decode the received signal into a message satisfying the error detection code) is considered a valid criterion, since the receive signal may, due to fading, suddenly disappear completely. This represents the extreme to which a error control scheme should be designed, since in general a given amount of receive signal will be available, furnishing a favorable decision bias.

In order to furnish a probability of less than 10^{-8} of accepting a false message by coding alone, at least 27 bits of redundancy would be required. A much more efficient approach to attain the desired performance is to employ message quality detection. There are several schemes possible to implement this function. One is to test the level at the end of each bit integration time against a threshold and accumulate the number of times the decision failed to satisfy the threshold quality test. If the accumulated count exceeds a preset number, the message is rejected, independent of the error detection code test.

The message quality detection should furnish a degree of protection against false message acceptance of at least 10^{-5} for the forward link and 10^{-4} for the return link telemetry for the composite protection obtained from combining error detection and message quality of 10^{-8} and 10^{-5} respectively for the two links. The figure below shows for the indicated parameters the performance of the quality detection concept. The parameter selection is not an optimum choice, but does illustrate how readily the quality detection scheme can assume the sole responsibility of dismissing a false message, while still allowing a high probability of vali ' message detection.

The above approach to message quality evaluation does not represent the most powerful approach, but its implementation is simple and its performance is more than adequate for this case. In addition, the modem is equipped with a threshold detector to facilitate acquisition and code search anyway, so incorporation of message quality detection represents no significant impact on complexity.

The above discussion pertains mainly to non ECM conditions. As is shown in another topic, incorporation of an error correction code as opposed only to error detection capability can be very advantageous, furnishing about a 1 dB improvement against continuous jamming and 4 dB against burst jamming. Incorporation of error correction coding is left as a design option.

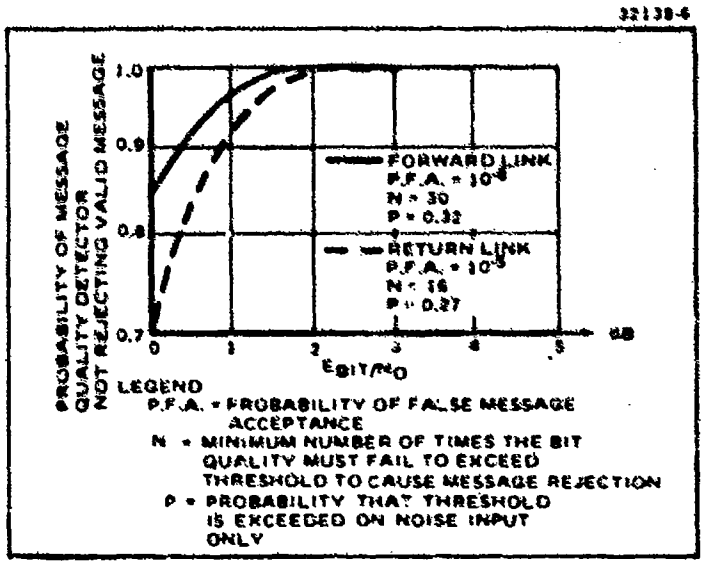

Performance of Message Quality Detection Concept. The message quality detector can easily handle the desired level of rejecting a false message, while still not impacting the probability of detection of valid messages.

LINEAR ENCODING AND DECODING

For providing a high degree of error-detection capability without regard to error correction, the recommended linear encoding is the simplest solution.

A linear encoder (see facing figure) consists of a shift register and a few standard logic gates. The decoder is identical with the encoder except for the input connections. The length of the shift register needs to be only as long as the desired number of parity bits. The feedback connections are not critical but can be selected to maximize encoded word separation.

Error-detection encoding in the WCCM system contributes a significant improvement in antideception capability, since any message must match the error detection parity as well as match the PN spectrum-spreading code. A degree of freedom exists in the shift register preset, in addition to the feedback tap connections. Thus, to spoof or deceive the receiver, the spoofing signal must simultaneously match PN code timing, data message timing, error encoder feedback and preset, as well as contain valid address and message type indicators wherever applicable.

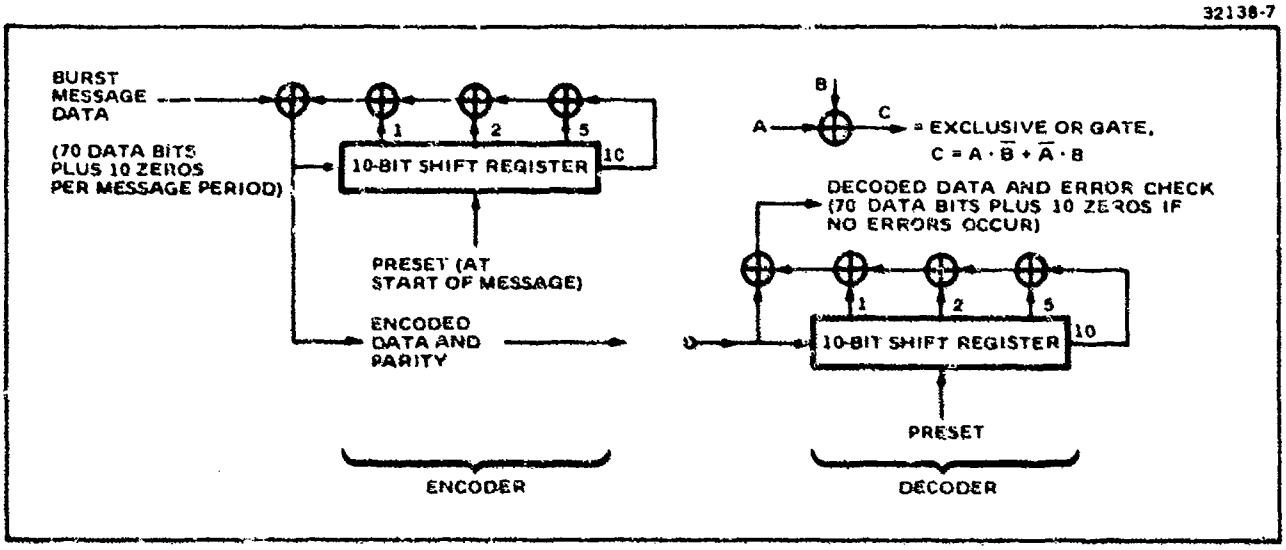

Example of Linear Error Detection Encoding and Decoding Technique.

SINGLE VERSUS DUAL RCV PSEUDO NOISE GENERATOR TRADE-OFF

The use of two pseudo noise generators in each RCV modem as opposed to one represents a cost impact. However electronic counter-countermeasures considerations make it highly desirable to use dual pseudo noise generators for reliable WCCM system performance.

The use of a single pseudo noise (PN) generator within the RCV modem would force the simultaneous slewing of both transmit and receive functions of the modem during any synchronization loss condition that requires a search mode for reacquisition. This condition would result in the loss of critical telemetry and video data being sent to the Ground Control Station (GCS) until the RCV receiver regains synchronization.

Using two PN generators within each RCV modem (one for the transmit and one for the receive function as shown in the facing figure) results in some increase in modem cost. However upon forward link signal loss, the RCV can continue to transmit video and/or telemetry during forward link reacquisition search. Thereby the GCS can continue to receive RCV responses regardless of forward link status. In addition, degraded ranging can be performed during a forward link synchronization loss condition. The resultant ranging accuracy will be a function of the forward link outage duration.

When using two PN generators within an RCV modem, additional system benefits in the form of electronic counter-countermeasures can be derived. This is accomplished by automatically unlocking the receive and transmit PN generators when a reacquisition search is initiated. In this manner, the receive PN generator can be slewed (search involves slewing of the receive PN generator) while maintaining constant transmit PN generator timing. Therefore, effective jamming, due to coincident PN code slewing coincident with effective jamming, cannot be detected by the jammer.

If relocking of the transmit and receive PN generator is automatically performed upon reacquisition, a jammer could again recognize the effectiveness of his action (due to the transmit PN generator offset correction). To prevent this, a single status bit in the downlink message is used to inform the GCS of reacquisition. Subsequently, the GCS can command relocking of the transmit and receive PN generators at some convenient time. In this manner the forward link command control of the relocking process increases effective anti-jamming protection.

Each of the PN generators recommended should be on one printed circuit card, plus a few associated controls. Each of the PN generators would be of identical construction.

In conclusion, the benefits derived from using separate receive and transmit PN generators with the capability of being locked or unlocked depending on system status represents the desirable concept to be used. The use of a single PN generator, although deleting one or two relatively inexpensive printed circuit cards from the modem, reduces system effectiveness and increases electronic countermeasure vulnerability.

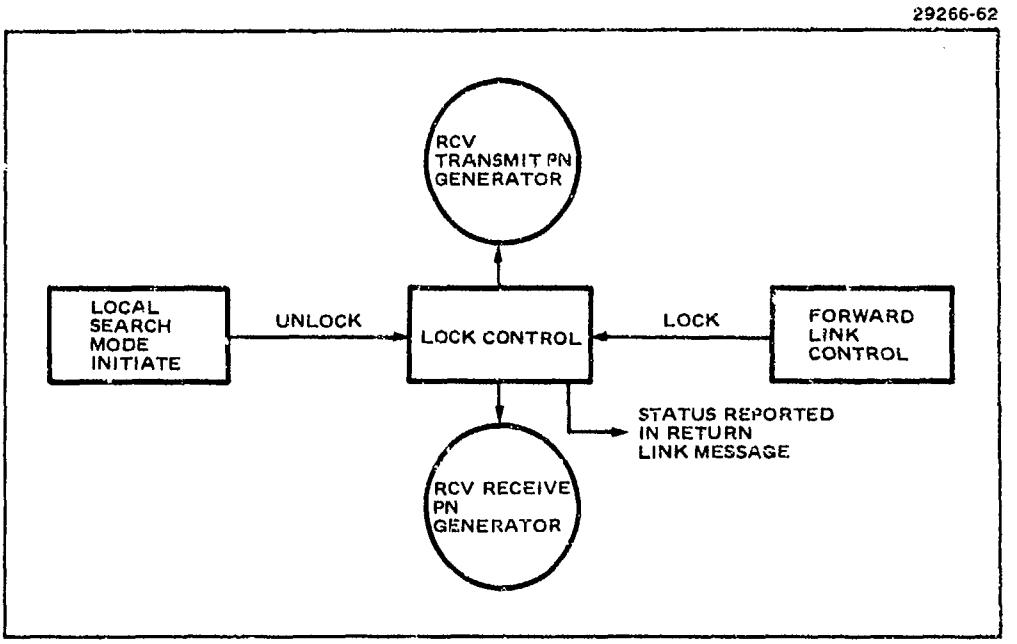

Dual PN Generator Control. The recommended use of separate transmit and receive pseudo noise generators in each RCV modem provides additional electronic countermeasure protection.

SELECTING THE RCV MODEM FORWARD-LINK SIGNAL ACQUISITION/REACQUISITION APPROACH

A serial search approach for forward-link signal acquisition and reacquisition results in acceptable acquisition times (less than 20 seconds), with minimal RCV modem cost impact. For short-outage times, the serial search technique provides correspondingly fast reacquisition with full anti-jam capability.

The selected WCCM design employs a continuous transmission forward link from the Master Ground Control Station (MGCS) to the deployed RCVs. Thus, all RCVs will continuously receive the GCS forward-link transmission. There are several methods which can be used for signal acquisition and reacquisition of this continuously transmitted signal by the RCV modem.

Initial sync acquisition, which will normally be performed at high signal-to-noise ratios (S/N), could be performed by using a short parallel correlator. In order to acquire or reacquire at greater distances, a long parallel correlator would be desirable because of low S/N conditions. The PN code used on the forward link will vary from deployment to deployment. As a result, if parallel correlators are used, they must be programmable to allow for a cost-effective modem design. For short-term outages of up to several seconds (because of short-term fading or effective jamming), it is highly desirable to reacquire with full anti-jamming capability. Since the RCV modem has the capability of acceptably demodulating data at a noise-to-signal ratio (N/S) of 30 dB, 40 dB of processing gain would be desirable during the cited short-term reacquisition phase. The 40 dB processing gain would provide acquisition capability compatible with the 37 dB maximum modular spectrum-spreading processing gain associated with the minimum RCV deployment mode data rate.

Analog or digital parallel preamble acquisition correlators, with 40 dB processing gain, possess major disadvantages for WCCM application. Fully programmable analog devices (acoustic surface wave) are presently unavailable and would result in high-risk development. A 40-dB, fully programmable digital correlator, although feasible, would be cost-prohibitive (costing several times that of the total modem). As a result, if parallel correlation techniques are implemented, a shorter correlator must be used. Digital parallel correlators having 25 dB of processing gain could be developed, which would not severely impact RCV modem cost, size, or weight. However, the 25-dB processing gain would be insufficient for some needs as already noted.

Regardless of the acquisition and reacquisition concepts used, a serial correlation process must be implemented within the RCV modem PN code tracking loop. In addition, the PN code-tracking, serial correlation circuitry must operate under full dynamic conditions of S/N and system modularity. This required serial correlation circuitry can be used for acquisition and reacquisition by incorporating a relatively small amount of additional modem circuitry for controlling a search process during the acquisition and reacquisition phases. One disadvantage associated with a serial search approach is that the relative speed of sync acquisition is slower than for parallel correlation. Therefore, if reasonably short acquisition times are to be maintained, the PN pattern length must be limited. The 2-megachip PN pattern length selected for use in the WCCM system allows for the use of a serial search approach. The use of a 60-Kpps (readily available in the RCV modem) search rate will allow a full PN pattern search to be conducted within a mean time of less than 20 seconds. This resynchronization time would be applicable to initial acquisition as well as to

reacquisition after any long outage. A long outage is defined as lasting more than 105 seconds, as discussed in the RCV modem reacquisition technique (search mode implementation) topic in Section 4 of this report. The 20-second initial acquisition and long-term outage reacquisition time is reasonable for RCV deployments. For short-term outages, reacquisition times will be significantly less and will be proportional to the outage duration. A major advantage associated with the serial search approach is that acquisition and reacquisition can be performed with full anti-jamming protection at very reasonable cost. In addition, the concept of commonality between the RCV and GCS modems would be maintained since the GCS modem utilizes serial search for signal acquisition and reacquisition.

RCV MODEM FORWARD-LINK ACQUISITION/
REACQUISITION TRADE-OFF ANALYSIS

Serial Search Approach	Parallel Correlation Approach
20-second mean time for initial acquisition	Initial acquisition time within one frame interval (1/30 second)
Minimal RCV modem cost impact since serial correlation circuitry is already available in PN code tracking loop	High RCV modem cost impact for parallel correlator implementation capable of operating under full dynamic conditions of S/N and system modularity
Serial search concept time proven on previous programs	Acoustic surface wave device for WCCM application represents high-risk development
Reacquisition time will be a function of outage duration (refer to reacquisition technique topic)	Reacquisition as soon as signal is strong enough to reacquire
Allows reacquisition with full anti-jamming protection	Reduced anti-jamming protection for reacquisition

SELECTING THE GCS BURST TDMA RETURN LINK SIGNAL ACQUISITION APPROACH

A serial search concept was selected for use in the RCV modem in lieu of a parallel correlation technique. Serial search allows for acquisition and reacquisition to be performed with full anti-jamming protection during short outages, provides a reasonable acquisition time, and results in the lowest implementation cost of any search technique.

The time division multiple access (TDMA) return link mode consists of short intermittent messages transmitted from each of the RCVs. This results in only a fraction of the pseudo noise (PN) code being transmitted from an RCV during each burst interval. Therefore there will be no continuous signal for acquisition or tracking. Due to the selected modularity concept used for the WCCM, the most critical modular case for acquisition and reacquisition is the reduced RCV capacity mode in which five (5) RCVs or less are deployed. The problem associated with the reduced capacity mode stems from their associated higher processing gains. To remain compatible with the data processing gain of 37 dB, the burst acquisition circuit would need an effective processing gain in excess of 40 dB. This amount of processing gain imposes severe problems on the implementation of acquisition correlation techniques.

One method which could be implemented to obtain signal acquisition is to employ a parallel synchronous acquisition correlator at the Ground Control Station (GCS), which is programmed on a time division basis. The programming would be required since each RCV employs a different PN code (or a different portion of the same PN code). The correlator could be either analog or digital. However both of these types of synchronous acquisition correlators possess major disadvantages. A fully programmable analog preamble acquisition correlator (such as an acoustic surface wave device) is presently unavailable and would require long high risk development (due basically to the 60 Mpps PN chip rate and the desired large number of taps). A programmable digital preamble acquisition correlator can be developed. However both development cost and production cost would be high for the GCS WCCM (probably over $40,000 per ground station). Also it should be mentioned that the effective bandwidth of a 40 dB parallel correlator operating at the 60 Mpps chip rate is less than 6 kHz. This bandwidth is somewhat less than the frequency uncertainty at C-band due to the ±5 kHz maximum doppler frequency. Therefore, a correlator with 40 dB or greater processing gain would require a two dimensional search program (frequency and time) which would complicate modem design.

Regardless of the type of acquisition circuitry used, serial correlation will be used within the GCS modem PN code tracking loops. The GCS modem PN code tracking loops must operate under full dynamic conditions of S/N and system modularity. Since the PN code tracking loops do not function to maintain correct PN timing during initial acquisition or reacquisition phases, they can be used for signal acquisition and reacquisition. Therefore, this method of serial search (using existing PN code tracking circuitry) would be the most cost effective signal acquisition technique for the WCCM. The serial search approach also has the advantage of being able to maintain anti-jamming protection during reacquisition phases which could not be performed with cost effective parallel correlation techniques. One disadvantage of the serial search technique is the slower acquisition times relative to parallel correlation techniques. However, at the selected 60 Mpps PN chip rate, a full PN pattern search can be conducted within a mean time of 20 seconds. This search time is reasonable for long duration outages. For short duration outages – due to short term fading or effective

jamming – limited PN search modes can be employed which result in significant reductions in reacquisition times (refer to RCV modem reacquisition technique topic in section 4.

Initial acquisition using serial search during a TDMA burst transmission mode can be facilitated by insertion of RCV ranging predictions into the GCS modem PN code tracking loop. The ranging information will be required due to the limited PN search which can be conducted by the GCS modem during an RCV burst interval. If the ranging information used for initial acquisition is in gross error (more than approximately 15 nautical miles) initial acquisition will have to be conducted in a continuous transmission mode. This amount of error associated with RCV ranging prediction is highly improbable.

The serial search concept was selected for use in the GCS modem based on the above facts, that is: lower cost, reasonable acquisition and reacquisition times, and the capability to maintain full anti-jamming protection during the acquisition and reacquisition modes.

IMPLICATIONS OF BURST TDMA RETURN LINK MODE FOR ACQUISITION/REACQUISITION

- Non continuous GCS modem signal reception requires inter-burst error prediction for acquisition and reacquisition
- Sync acquisition at the GCS requires time division programming to accommodate the different received RCV PN codes (or a different portion of the same PN code)
- Initial acquisition using serial search during a TDMA burst mode can be facilitated by insertion of RCV ranging predictions into the modem search process.

29266-81

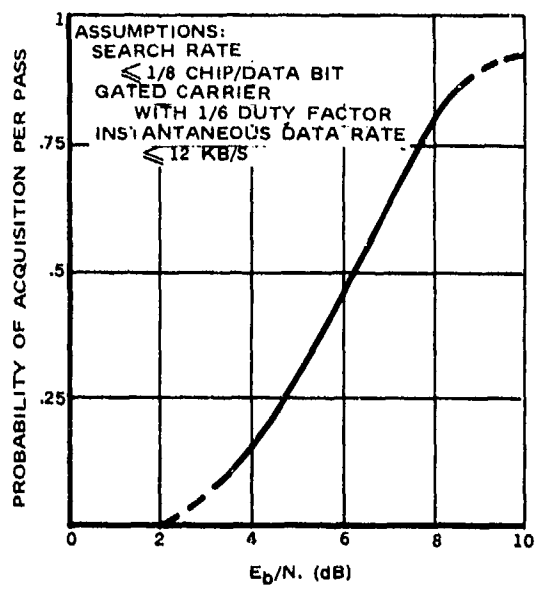

Estimated Performance of Serial Search of Preamble Acquisition. This recommended approach would allow acquisition at greater than 20 dB noise to signal ratios in all modes.

REVIEW OF CURRENT STATE OF THE ART PARALLEL CORRELATION HARDWARE TECHNOLOGY

A review of parallel correlation implementation technology techniques (matched filters) indicated that no analog correlators currently exist which can produce close to the 40 dB processing gain required in a field environment. Digital correlators are feasible, but they are expensive and consume large amounts of power.

During the first half of this study a search was conducted for practical matched filter correlation techniques which could perform the burst acquisition function at signal to noise ratios down to -30 dB (i.e., noise 1,000 times greater than signal). To produce reliable burst acquisition requires at least a 10 dB output signal to noise ratio. Thus, 40 dB of effective processing gain was desired.

Another key desired parameter was to provide a match to a PN (pseudo random) pattern at a keying rate of at least 60 Mpps. Also, it was considered necessary that the correlator be provided with the ability to electronically reprogram the PN pattern to be matched.

After considerable review it was concluded that no analog techniques exist by which this capability could be produced in an acceptable length of time (one year or less) and at a reasonably low risk. The closest analog devices found use the surface wave acoustic technology. In addition, devices with 30 dB or more processing gain appear very risky at present.

Digital devices are available and techniques have been demonstrated which would allow the desired processing gain, but the 60 Mpps keying rate is higher than that produced in any known digital correlator of practical processing gain. These speeds are achievable at low risk using any of several varieties of emitter coupled logic or by use of Schottky TTL (transistor-transistor logic). However, the power levels and quantity of components required to perform this function with presently available circuit types is prohibitive. See the facing table. Tapped delay line preamble acquisition techniques using both digital and analog parallel correlation are discussed in more detail in Appendix B.

An alternative digital implementation which offers lower power, size weight and cost is the use of large scale integration (LSI) using complementary metal oxide semiconductor (CMOS) techniques. An internal Hughes development program has indicated that a fifty stage bi-phase correlator is practical in a single integrated circuit. The keying rate for these devices would be limited to 10 Mpps, however. Techniques have been developed for multiplexing the 60 Mpps PN sequence into 6 parallel 10 Mpps chains, which would allow use of these relatively low power LSI circuits. By using this CMOS–LSI approach, it is estimated that a 40 dB effective processing gain could be produced at a production cost of about 40 to 50 thousand dollars per correlator. This is considerably higher than desired for use on the WCCM.

HIGH SPEED DIGITAL CORRELATORS — EACH APPROACH PRODUCES APPROXIMATELY 40 dB OF EFFECTIVE PROCESSING GAIN

Implementation Technique	Integrated Circuit (IC) Type	IC Packages Required (thousand)	Circuit Card Quantity	Estimated Power (kW)	Estimated Production Cost (K dollars)
Single 15,000 Stage Correlator at 60 Mpps	Schottky transistor-transistor logic (STTL)	15 (plus 30,000 Resistors)	750	5	70
Six parallel 15,000 stage correlators at 10 Mpps	Complementary MOS - large scale integration (CMOS-LSI)	1.8	60	0.2	45

SELECTING THE APPROACH TO TIME DIFFERENCE MEASUREMENT FOR RANGING AT THE GCS

The management of GCS transmit and receive PN generator time differences – in lieu of a time of arrival technique for ranging – has been selected due to its relative ease in circuit implementation and cost effectiveness.

In the recommended Hughes approach, the receive and transmit pseudo noise (PN) code generators in both the RCV and GCS are continuously in operation (even during the RCV TDMA burst mode). Also, all PN generators are synchronized relative to each other. Therefore, the difference in GCS transmit and receive PN timing will represent the round trip time difference for RCV ranging calculations. The four PN code generators associated with the RCV and GCS modems are illustrated on the facing page. The PN generators are illustrated as clocks in which a 360° rotation occurs each full frame interval. If the GCS frame timing pulse is as illustrated, the RCV receive PN generator timing will be delayed some time interval (Δ) corresponding to the propagation delay between the RCV and GCS. The RCV transmit and receive PN generators are normally locked together and the GCS receiver PN generator timing is delayed some time interval corresponding again to the instantaneous propagation delay between the RCV and GCS (Δ). The total timing delay between the receive and transmit GCS PN generators therefore will be equivalent to the round trip propagation delay (2Δ).

In the return link TDMA mode, each RCV bursts at a rate of twice per frame interval (as illustrated in the facing figure). The bursts are initiated at variable times controlled by the GCS. The fact that the burst initiate times are variable has no effect on the ranging accuracy. The bursts are only used (as far as PN code tracking and ranging is concerned) to refine GCS receive PN generator timing during the received burst interval and develop error prediction signals which are used for interburst timing correction. In this manner, accurate time differences can be generated for the desired ranging. Ranging accuracy will be a function of many system parameters, however, as far as the GCS modem is concerned, it can be shown that ranging error will be a function of the carrier to noise density ratio at the GCS modem IF amplifier output, and will not exceed approximately 2-3 feet.

An alternative considered for time difference measurement was the use of a time of arrival (TOA) approach. This method would be especially applicable to the RCV TDMA mode in which ranging could be derived from differential timing between the burst initiate times (controlled from the GCS) and corresponding GCS burst receptions. However, the TOA technique could not be easily implemented when the RCVs are operating in a continuous video/telemetry transmission mode. This is because it would be necessary to add additional RCV modem circuitry to incorporate return link overhead in the form of timing information from which the GCS could derive relative TOA values.

In conclusion, the selection of GCS PN generator differential timing measurements (with GCS PN generator burst correction during a TDMA mode) in lieu of individual burst TOA measurements was adopted for the Hughes WCCM ranging approach due to its resultant accuracy, relative ease in circuit implementation, and cost effectiveness.

29266-65

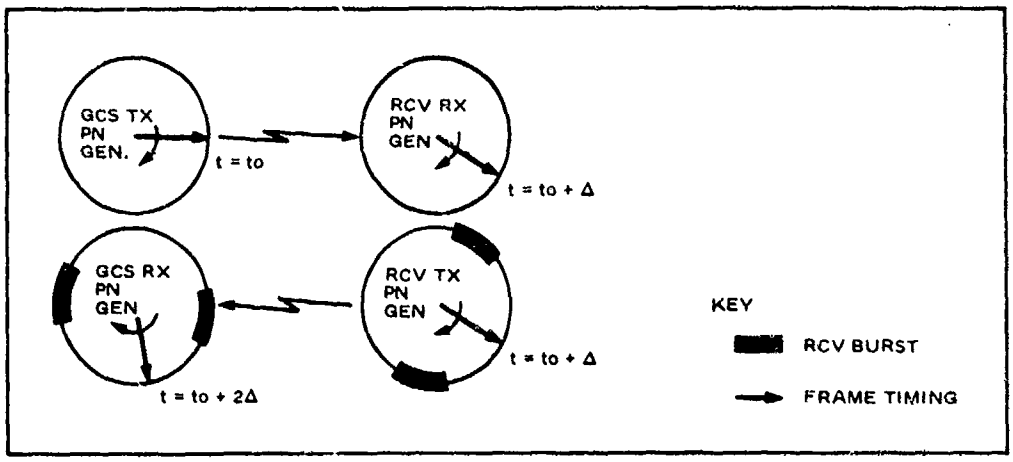

Approach to Time Difference Measurement. The dual PN generator used in the GCS and RCV allows for a cost effective, easily implementable concept for derivation of round trip time differences.

RANGING AND POSITION LOCATION ACCURACY EVALUATION

Accuracy of the selected WCCM modem range measurement technique will be better than 2 to 3 feet. Since the modem's only contribution to position location accuracy is range measurement accuracy, the modem's contribution to the position location accuracy requirement of 100 feet is essentially insignificant.

The WCCM position location philosophy uses two ground stations for the determination of precise range measurements. The range measurement accuracy must be such that RCV position location can be determined within the 100-foot design requirement.

For a typical deployment of a 20-degree angle between the lines of sight from an RCV to the ground stations, a range error in one of the legs results in an uncertainty of approximately 6:1 ($1/\sin 10^{\circ}$) for the maximum error component which lies along the perpendicular bisector of the obtuse angle formed at the intersection of the legs. Since independent measurements are made at the two receive sites, an approximate 4:1 ($6/\sqrt{2}$) multiplying factor results. Therefore, an RMS ranging error of approximately 25 feet represents the tolerance required to maintain the specified 100-foot position location accuracy.

The 25-foot ranging accuracy tolerance will be only part of the total error contribution to position location accuracy. Obviously, the degree of accuracy associated with the true positions of the ground stations will impact the required bilateration calculations for position location. RCV altitude sensor accuracy and propagation phenomena will also enter into position location accuracy determination.

As far as the modems are concerned, they can contribute only to the range measurement accuracy components of the position location accuracy. The facing graph illustrates the relationship between the carrier-to-noise density (C/N_0) at the RCV IF amplifier output and the RMS timing error. The graph was derived by taking into consideration the selected gated carrier approach which uses the 1/2400-second integration time, with applicable null zone decisioning circuitry. The important point to note from this graph is that a maximum ranging error of approximately 2.3 feet is all that would be expected from the RCV modem. Similar errors will occur at the MGCS and GSS. However, the total amount of error represents a small portion of the total allowable error in order to maintain the desired 100-foot position location accuracy.

The RCV and ground station modems have been designed so that during an RCV TDMA burst transmission mode, interburst PN code tracking error predictions are generated to assure a minimum error correction requirement during subsequent RCV burst transmissions. Interburst error prediction corrections are not envisioned as being required for position location purposes. The reason is that even at maximum RCV velocity (Mach 1), the maximum interburst error accumulation would not exceed approximately 17 feet. Accumulated position location error, due to RCV dynamics during interburst time intervals can easily be reduced - if desired - for improved position location accuracy. Accurate time of arrival (TOA) of RCV bursts, along with heading and velocity data extracted from previous RCV bursts, are known and thereby allow for extrapolated interburst position location.

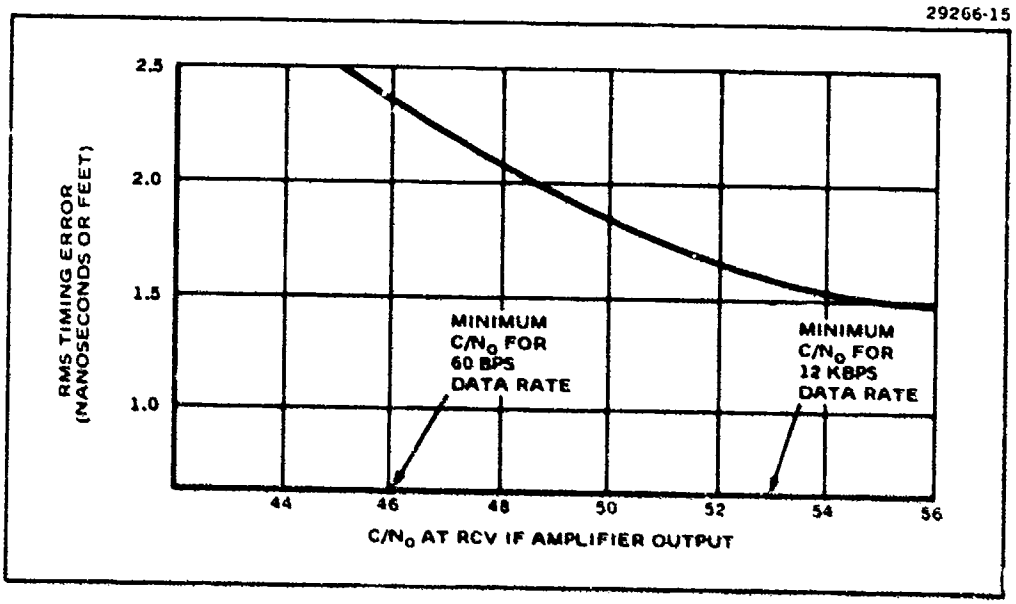

Predicted Performance of GCS Ranging Concept. The maximum ranging error of this modem is approximately 2.3 feet.

SELECTING THE APPROACH TO TDMA RETURN LINK GUARD TIME MANAGEMENT

By remotely assigning RCV transmit times, guard time can readily be reduced to an average of 300 microseconds. A unique approach to changing transmit timing while using continuous pseudo noise generator operation is recommended.

Because of the large range dispersion of the RCVs in the TDMA mode, it has been assumed that the time of arrival of all TDMA signals at the Ground Control Station (GCS) will be controlled to avoid overlap. By using this assumption, much of the GCS demodulator and data decoding circuitry can be time-shared. To allow for uncontrolled variation in signal time of arrival, guard time is allocated.

Two philosophies of guard time allocation were considered early in this study. First, TDMA transmit timing assignments (and thereby guard times) could be set prior to RCV launch. This arrangement would require very large guard times to allow for ranges up to 250 miles and, in turn, would force a very slow reporting cycle and very inefficient use of time. Second, the transmit timing allocation could be performed via the command link. By use of this approach the guard times can be much shorter since they have to cover only the uncertainty in signal arrival times. The major factors affecting guard time selection under this second approach are listed on the facing page. Because of its more efficient use of time, this second approach has been chosen for the WCCM baseline.

The average guard time selected for use with the TDMA mode was 300 μsec, equivalent to approximately 50 nautical miles. The WCCM wide-range search mode encompasses a range of ±16 miles. Therefore, any two GCS timing and control modules (TCMs) associated with adjacent received TDMA bursts operating in wide-range search modes will include an effective guard time equivalent to 18 nmi (between the respective maximum search excursions). In this manner, the 300-μsec average guard time allows the GCS TCMs to operate in any of the limited search modes without fear of generating mutual interference. The use of a 300-μsec guard time also allows for a low update requirement for reassigning RCV burst initiate times. For an RCV traveling at Mach 1, the 250-nmi range can be traversed in approximately 20 minutes. On the assumption that only one RCV is traveling at this velocity, a maximum of 14 updates will be required to prevent the interference (18 miles traversed between each update). Similarly, two RCVs traveling in opposite directions would require a maximum of 28 updates during the 20-minute excursion. In actuality, this update rate could be higher (for example, two updates per minute) to ensure more than adequate guard space.

There are basically two methods which were considered for the maintenance of guard times between RCV bursts for the prevention of mutual interference. These include (1) control of RCV frame offsetting (and thus PN timing) from the MGCS and (2) the control of RCV burst initiate times within a frame interval from the Master Ground Control Station (MGCS).

The control of RCV frame offsetting from the MGCS requires that each RCV modem be capable of receiving uplink timing commands from the MGCS for control of transmit PN generator timing to an accuracy of a chip interval. The 1-chip interval value is based on the fact that the GCS modem's PN code tracking loops will not trackout PN timing offsets more than a 1-chip interval without an associated PN search being conducted. This type of resolution (1-chip interval or 16.7 nsec) requires complex timing circuitry within the MGCS for the control of up to 25 RCV transmit PN generator offsets to within the required chip interval. In addition, timing coordination between the Ground Slave Station

(GSS) and MGCS (which is required for range measurements) requires a high degree of precision timing circuitry both in the GSS and MGCS.

The control of RCV burst initiate times within a frame interval from a MGCS is a method which allows RCV PN generators to continuously operate without PN offsetting requirements. Also the controlled RCV burst initiate times can be controlled to within a bit interval (8.3 μsec) instead of the chip interval (16.7 nsec) requirement of the RCV transmit PN generator offsetting method. Since RCV transmit PN generators are not offset, coordination requirements between the MGCS and GSS are simplified. In addition, the resolution required for accurate ranging is decreased by a factor of at least 500 (500 chips per bit under a full deployment mode).

As mentioned in previous topics, the burst rate from each RCV during a TDMA mode is twice per 1/30-second frame interval, or once per half-frame interval. By allowing each RCV to initiate its respective burst on any of 1000 positions during a half-frame interval, quite sufficient resolution will be present. In addition, the timing associated with this scheme already exists in both the RCV and ground station modems. Therefore, minimum additional circuitry would be required for the timing function.

The theoretical ranging accuracy obtained from the two return link guard time approaches already discussed are compatible. The reason is because both systems would use time difference measurements associated with the basic chip interval for the desired ranging.

In conclusion, because of the relative timing and ranging problems associated with controlled offsetting of RCV transmit PN generator timing, the control of RCV burst initiate times (each RCV transmit PN generator continuously operating without interruption for incremental offsets) is an obvious selection for the TDMA return link guard time management.

FACTORS AFFECTING THE GUARD TIME SELECTION

- Transmitter Turn-on and Turn-off Times
  - Response times of a few microseconds require electronic switching with high on-off ratios.
- Multiple TDMA Receive Sites and RCV Geometry
  - Guard times must allow for nonoverlapping signals at all desired receive sites.
- RCV Dynamics and Transmit Timing Correction Rate
  - Fast moving RCVs require more rapid correction or larger guard time allocation.
- Command Link Outage Time and Clock Drift Rates
  - Maintenance of the return TDMA link during sustained forward link outage requires larger guard time allocation.
- Reacquisition Search Range at GCS
  - If the GCS TDMA demodulator circuit is to be time-shared, guard times must be sufficient to prevent overlap in the reacquisition mode.

DETERMINING THE OPTIMUM APPROACH TO ANALOG/DIGITAL QUANTIZATION

The combination of gain control and analog-to-digital conversion eliminates the special effectiveness of short-pulse jamming. The use of medium speed gain control (attack and decay rates of a fraction of a dB per chip), so that a major change in signal or interference level is compensated over a number of chips, gives optimized performance against all types of interference.

The advantages of using digital, baseband signal processing is apparent in the improved performance achievable over a broad range of conditions as compared with tranditional analog processing. The penalty that is paid with the digital approach is to accept a slight loss incurred by the analog-to-digital (A/D) conversion. However, with the slight predictable loss, reliable performance is achieved under unfavorable conditions. The heart of digital signal processing is the conversion of the signal into digital form and the control of the A/D loss through automatic gain control (AGC).

In order to clarify subsequent nomenclature, Figure A is included showing the transfer diagram of the two-bit A/D converter. The A/D circuitry includes an input signal sampler operating at the chip rate (60 Mchips/second). The two-bit A/D converter furnishes four discrete outputs and provides the ability to control the threshold, which corresponds to the input level value where the outer output levels are engaged. The quantization levels are indicated as ±V, and ±3V for the purpose of illustration. If the ±3V outputs come into effect close to zero input volts, or if they come into effect at very high positive and negative input voltages, then the resultant output is equivalent to single-bit A/D; a fact which makes it important to control the threshold level. In practice, the thresholds are set at a convenient level and then the proportion of the time the input signal falls into each of the four categories is monitored to control the gain of a preceding amplifier. Thus, the desired proportion among the output levels is maintained to minimize the A/D losses.

The setting of the threshold has a broad minimum in the region of negative S/N. The A/D loss, as defined in Figure A, will be minimized by controlling the IF rms input voltage so that the ratio of threshold voltage to video voltage is in the range of 0.5 to 1.5.

Figure B shows the conversion loss for two-bit A/D conversion for a threshold of 0.85. Although the two-bit A/D curve shows a loss above an input S/N of 3 dB, the output S/N is positive and increasing. For large negative S/N, the loss approaches asymptotically a value slightly less than 0.6 dB. The threshold of 0.85 corresponds for 2 CPSM to the probability being equal to 3/8 that both the I and Q channel output samples fall between the positive and negative thresholds. This threshold value provides optimum tracking.

In conjunction with a previous contract (the TOMAS* study), an extensive investigation, including computer simulation, into the effects of AGC and limiting on preamble acquisition and data performance was conducted. It was determined that the combination of gain control and A/D conversion is very valuable in eliminating the special effectiveness of short pulse jamming. The simulation, further, produced the result that the employment of medium speed AGC attack and decay rates (a fraction of a dB per chip) results in optimized performance against all types of interference. Thus, a major change in input signal, noise,

---

*Hughes Aircraft Company, "Technical Susceptibility to ECM of Time-Ordered Multifunction Avionics Systems (TOMAS) (U)," Final Report, March 1971, ECOM-[illegible]-F, Confidential.

or interference level will be compensated for over a several-chip period, resulting in minimum signal distortion.

Use of two-bit A/D conversion is recommended for the WCCM forward link, and three-bit conversion for the return link. The two-bit conversion scheme represents an attractive compromise for the forward link between the A/D loss (less than 0.6 dB) and the hardware impact on the RCV. Three-bit A/D is used on the return link mainly for the sake of the video transmission. Each video bit, when transmitting video at a 20-Mbps rate, is processed only by two chips. Thus only two quantized samples of each bit are available in the detection process for bit decisioning. When using two-bit A/D, the probability that these samples are of equal magnitude but the opposite sign is large enough at low S/N to affect the video performance. Use of three-bit A/D reduces this probability at a cost which has a negligible impact on the total complexity of the GCS.

29266-21

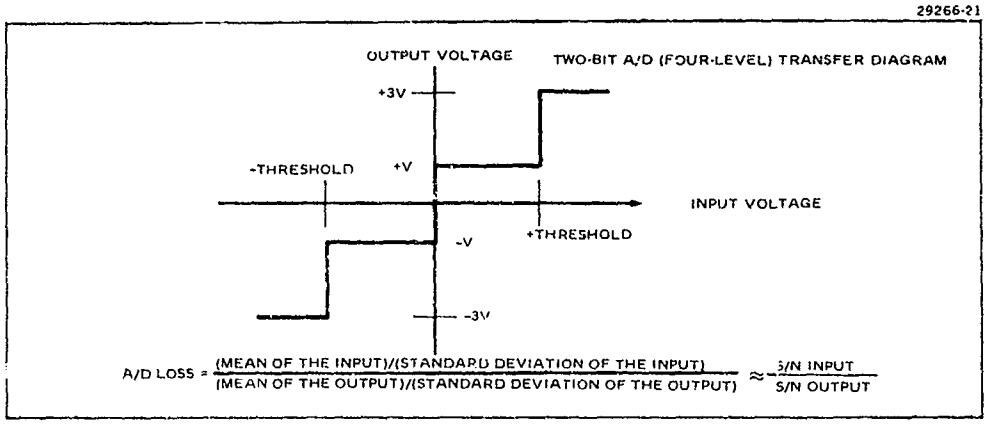

Figure A. Definition of A/D Conversion and A/D Loss.

32138-9

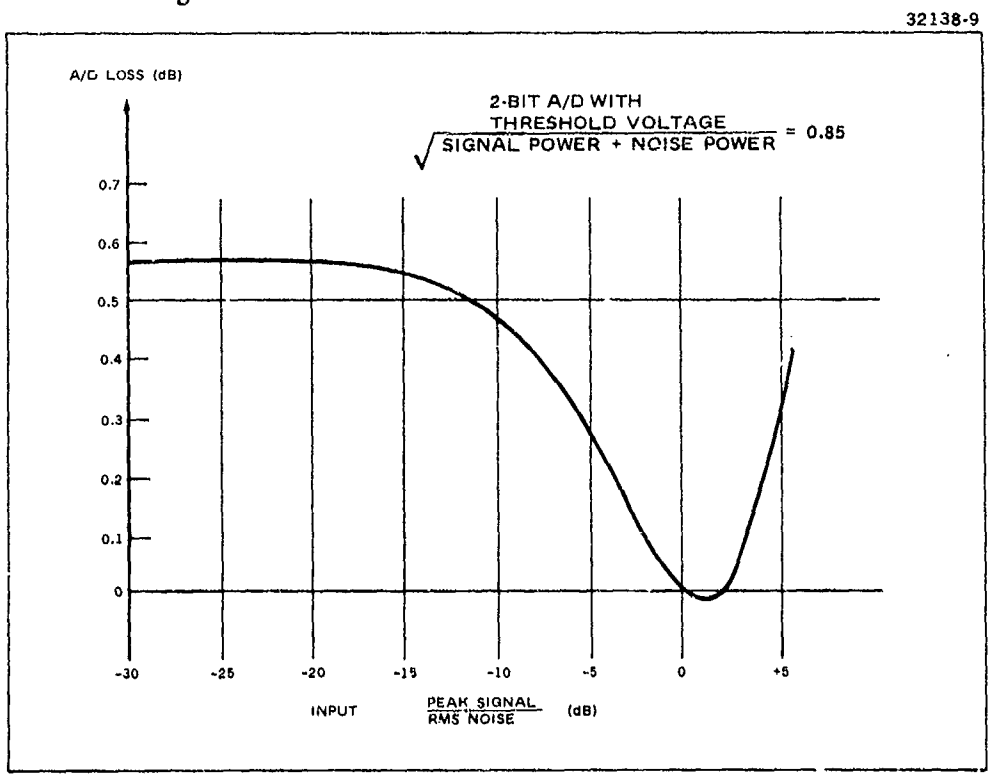

Figure B. A/D Loss versus Input Signal-to-Noise Ratio

SECTION 3
WAVEFORM AND MODEM DESIGN CHARACTERISTICS

Overview of WCCM Design

Key Features of the Waveform and Modem Design 3-0
System Configuration for RCV Command, Control, and Position Location 3-2

Forward Link Waveform and Modem Designs

Forward Link Waveform Characteristics 3-4
Full-Capacity Forward Link Message Timing Structure 3-6
Forward Link Message Timing Structures for Reduced RCV Deployment Levels 3-8
Key Features of the GCS Modulator 3-10
Key Features of the RCV Demodulator 3-12

Return Link Waveform and Modem Design

Return Link Waveform Characteristics 3-14
Return Link TDMA Channel Message Timing Structure 3-16
Message Timing Structures for the Continuous Transmission Return Link Channel 3-18
Key Features of the RCV Modulator 3-20
Key Features of the GCS Demodulator 3-22

KEY FEATURES OF THE WAVEFORM AND MODEM DESIGN

A high performance RCV Modem design which emphasizes modem reliability and simplicity has been achieved through digital signal processing of an addressed, time-division multiplexed, continuous transmission forward link waveform. Employment of a six channel hybrid FDMA/TDMA return link waveform design stresses maximum electronic countermeasure protection of critical telemetry transmissions and facilitates modular configuration of the GCS Modem for cost-effective implementation of ground control stations which can be configured for a wide range of operational objectives and RCV deployment levels.

The recommended waveform and modem designs delineated in this and the following sections of this report have been developed through objective consideration of the specified performance requirements, technical guidelines, and system performance objectives described in Section 1. Within the framework of these requirements, guidelines and objectives, the tradeoff and design selection analysis summarized in Section 2 have resulted in adoption of forward and return link waveform designs which facilitate simplicity of RCV Modem design and a GCS Modem design which may be modularly configured for a range of operational needs.

The facing figure depicts the recommended waveform time-frequency plan for the forward and return links. The forward link waveform design utilizes a 60 MHz channel bandwidth continuous TDM transmission approach to communicating command data from the GCS to the deployed RCVs. The 3 dB bandwidth is approximately 36 MHz with binary continuous phase shift modulation utilized at a 60 Mpps PN code keying rate. All forward link transmissions exhibit at least 30 dB of spectrum spreading processing gain, and if fewer than 25 RCVs are to be accommodated, the processing gain may be increased in convenient steps. The hybrid FDMA/TDMA return link waveform design utilizes six 60 MHz frequency division channels. Five of these channels provide for continuous transmission of time-division multiplexed video and telemetry from each of five RCVs operating in a video mode. The sixth channel provides for TDMA burst communication of telemetry data with a minimum of 27 dB of processing gain from up to 25 RCVs to the GCS. A modular design approach to the return link receive section of the GCS permits its configuration to be flexibly adapted to a wide variety of operational needs for operation on any number of channels from one to six. Similarly, it can be modularly adapted to accommodate any number of RCVs up to thirty; where up to 25 RCVs in the telemetry mode share the single TDMA channel and 5 additional RCVs each utilize a unique channel for multiplexed video and telemetry.

To maximize hardware commonality, each of these channels uses a 60 Mpps PN code chip rate and each video data stream is independently variable, by prior arrangement, from a 20 Mbps data rate down to 2 Mbps. By assigning the video portion of the signal to telemetry (CT mode), about 44 dB of spectrum spreading processing gain is available from a single RCV. A sixth channel may be used for a burst TDMA mode whereby each RCV may transmit once during each half frame (to be defined subsequently). There is sufficient guard time to enable simultaneous non-overlapping reception at two ground receivers and this can be accomplished without excessive forward link traffic required to control the transmit time of RCVs spread out over a 250 nautical mile range. If fewer than 25 RCVs are utilized during a mission, then all burst transmissions may be lengthened, by prior arrangement, in convenient steps to increase the spread spectrum processing gain. In a minimum configuration only a forward and one return channel are required for WCCM operation.

In order to accommodate Ground Control Station remote selection and control of the return link channel and transmission mode employed by each RCV during given mission phases, the RCV modem includes provision for reception, decoding, and execution of link commands received from the GCS on the forward link. By this means, the forward link waveform design accommodates a number of remotely assignable RCV return link functions. These include remote selection of a) one of six transmit channel frequencies, b) one of four modes (TDMA telemetry, Video and Telemetry, Continuous Telemetry, and Off), c) RCV transmit timing within the return link frame to within one telemetry data bit interval for ground receive guard time control, d) RCV antenna pointing to nearest 11° increment, and e) receive-transmit timing lock for each RCV. These five classes of link commands are employed to actively change the RCV modes of operation, only when such mode changes are operationally desirable.

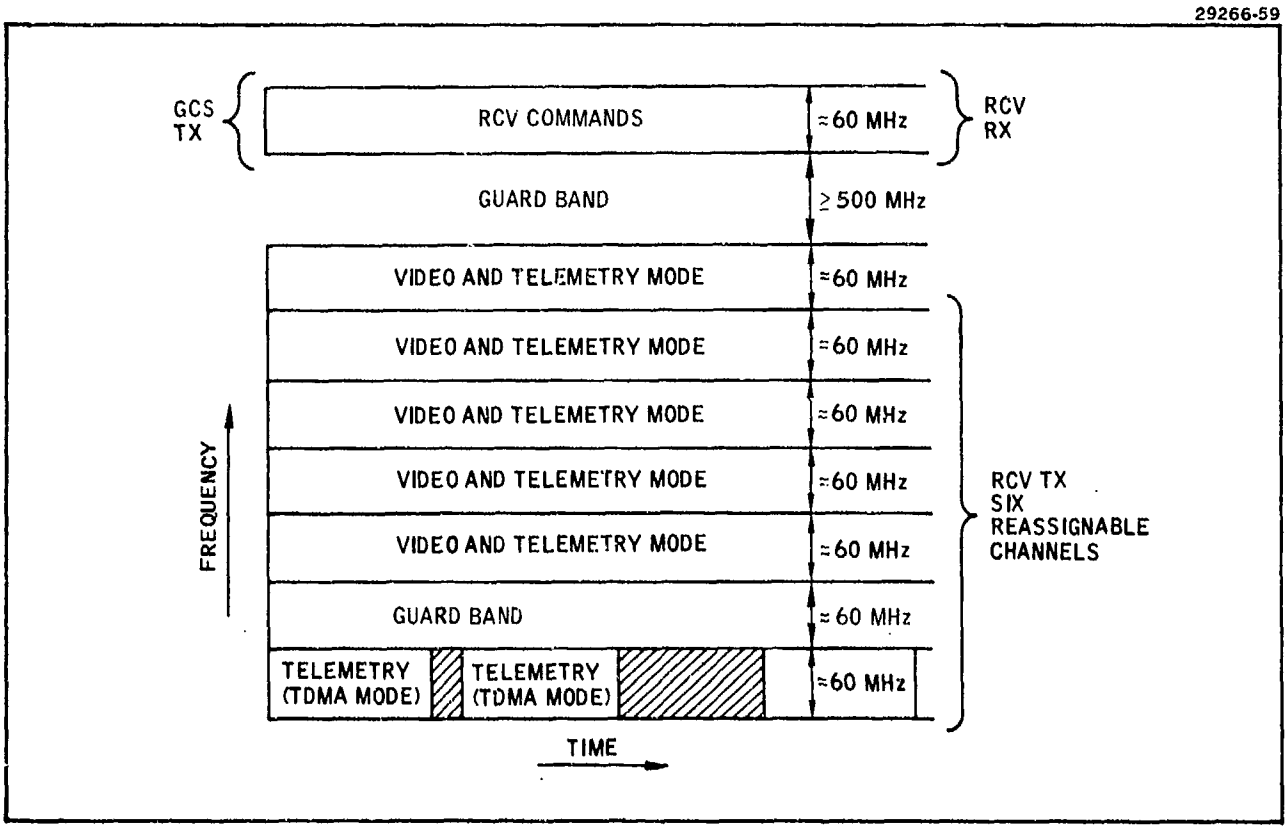

Fully Compliant Time-Frequency Plan. A modular design approach accommodates up to 30 RCVs, where up to 25 RCVs in the telemetry mode share the single TDMA channel and 5 additional RCVs each utilize a unique channel for multiplexed video and telemetry.

SYSTEM CONFIGURATION FOR RCV COMMAND, CONTROL, AND POSITION LOCATION

The waveform and modem designs developed in the conduct of this study provide for optional inclusion of RCV position location capability in the command and control system by providing a second ground station. The second station (termed the Ground Slave Station) incorporates a demodulator section of the RCV modem to receive range measurement timing coordination information by reception of forward link signals transmitted by the Master Ground Control Station.

When the forward link transmit and return link receive PN code timing difference measurement capabilities of the GCS Modem are to be employed for RCV position location, two ground stations are required. The Master Ground Control Station (MGCS) will house the full mission control personnel, remote control consoles, and data processing equipment required for RCV command and control. Additionally, a receive-only Ground Slave Station will be required to process return link signals for RCV ranging measurements. As shown, the master station can measure the round trip time differences between its continuous forward link PN code transmission and each of the unique RCV return link PN code sequences which are synchronized to it by virtue of the RCV modem design utilization of locked receive and transmit PN code generators. In this manner it can perform two-way ranging between the master station and each of the 25 RCVs.

At a remote Ground Slave Station (GSS) displaced at range R_S from the master station, PN code timing differences can also be measured to determine the range $R_1 + R_2$ from master-to-RCV-to slave for each of the RCV's. Transmission of these measurements by external data link to the master station provides the master with sufficient data to calculate the position of each RCV, if RCV altitude data is provided via telemetry on the return link.

Measurement of PN code timing differences at the GSS requires that it receive code timing synchronization information from the MGCS. This can be most simply achieved by including an RCV receive RF assembly and RCV Modem demodulator assembly in the GSS. These are shown in the second figure as the Command Receiver and Command Demodulator in the GSS. Thus, master timing synchronization of the slave from the master is achieved by GSS reception of the same continuous forward link transmission which is transmitted to the RCVs by the MGCS.

Mini-computers included in each ground station can perform ranging computations for each RCV from the PN coding timing differences supplied by the modems through the computer input/output buffers. The results of the ranging computations at the slave can then be transmitted from its mini-computer over a low speed external data link to the master station mini-computer for RCV position location computation.

As a result, in a two ground station system incorporating position location capabilities, additional WCCM modules are required at the GSS beyond the normal duplicate of the multichannel Demodulator section of the GCS Modem. These are the command receiver and demodulator modules shown. No increase in MGCS WCCM equipment is required for inclusion of the two-station position location capability. In both the master and the slave ground stations, the number of GCS Modem modular Channel Demodulator and Message Decoder Assemblies required will depend upon the number of FDM RF channels employed in the system. The number of Timing and Control Modules employed in each station's GCS modem will depend upon the maximum number of RCVs which the stations will be required to accommodate.

32138-10

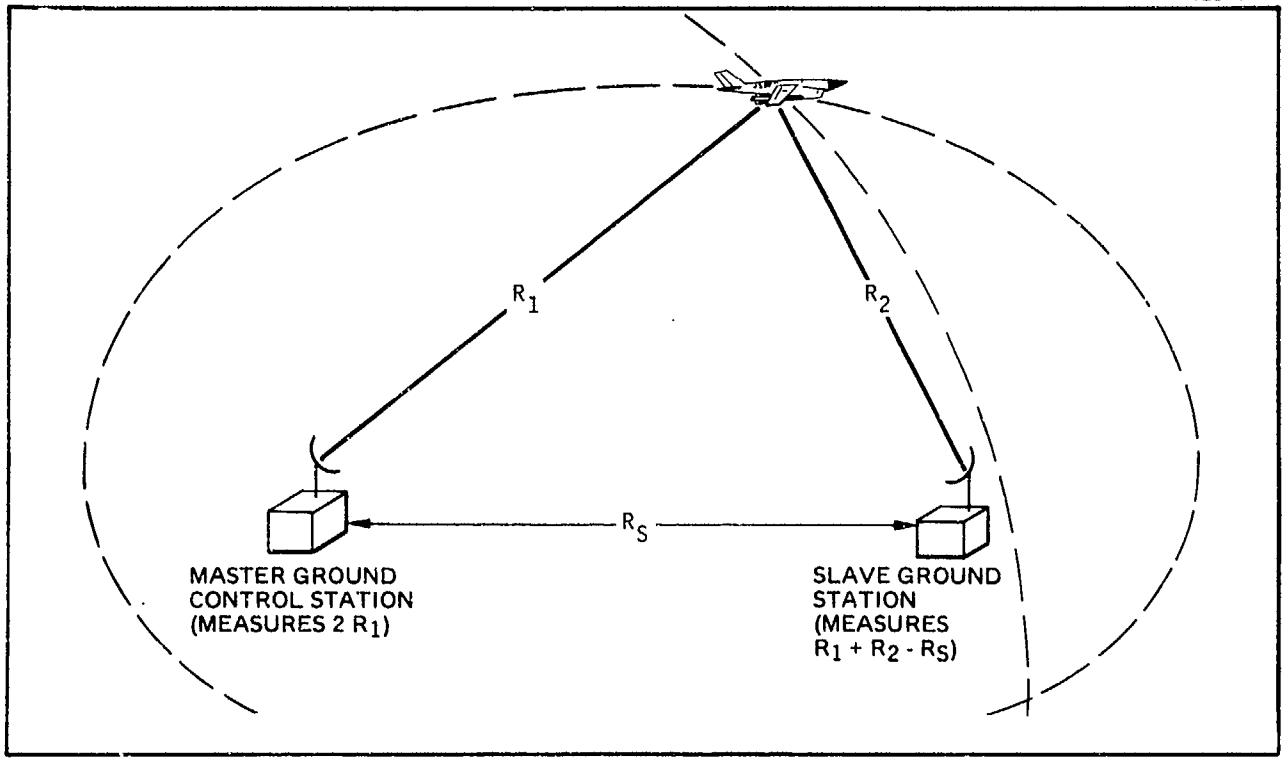

Figure A. Two-station Concept for RCV Position Location.

29266-88

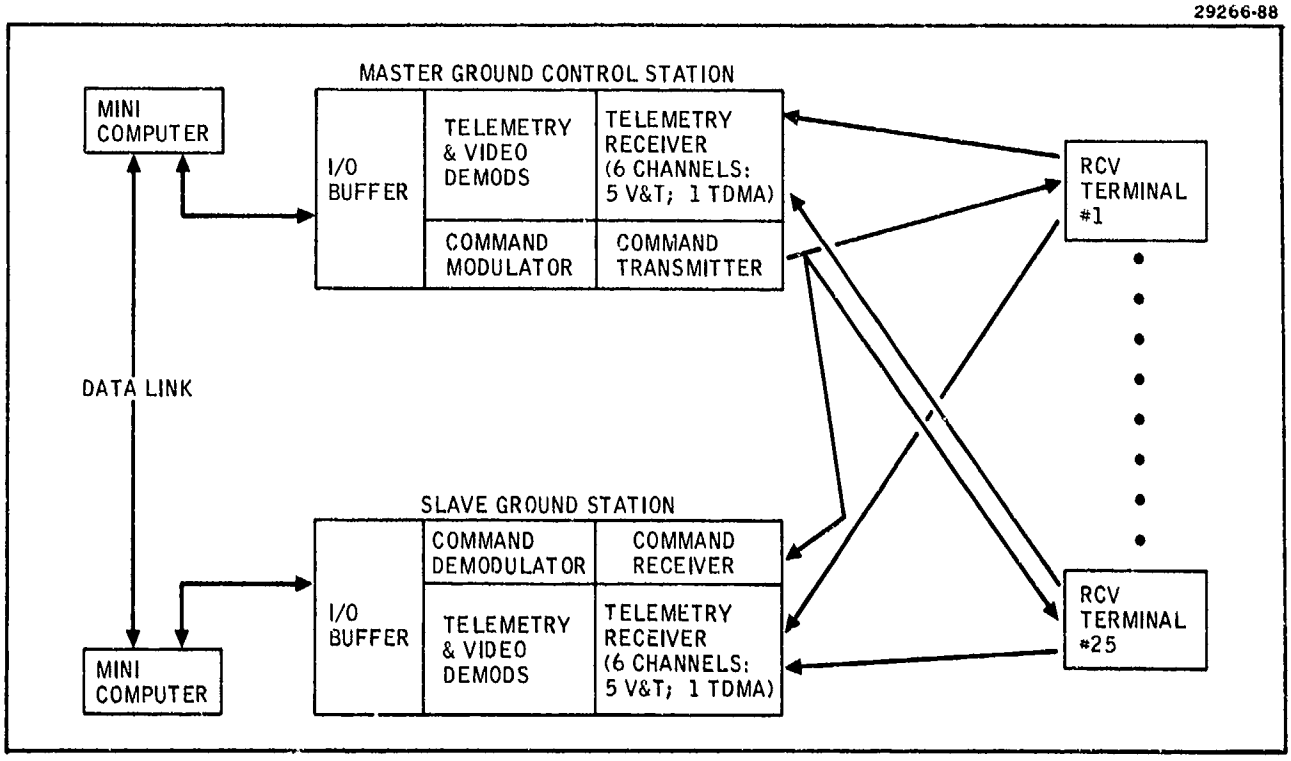

Figure B. WCCM System Maximum Capacity Configuration for Command, Control and Position Location of 25 RCVs. The Ground Slave Station includes a forward link command receiver and command demodulator identical to those in the RCV to accommodate inter-station timing transfer for range measurement.

FORWARD LINK WAVEFORM CHARACTERISTICS

The forward link transmission from the Ground Control Station to the RCVs provides for a minimum of 30 dB of processing gain at a 60 Mpps pseudo noise code keying rate and is simultaneously received by all RCVs. Thus all signal energy is available to each RCV for signal tracking while employment of addressed time-division multiplexed command messages on the link permits utilization of variable command rates to the individual RCVs.

The selected WCCM design employs a continuous transmission forward link from the GCS to the deployed RCVs. Thus, all twenty five RCVs are continuously receiving the GCS forward link transmission. This approach contributes to reduction in RCV receiver complexity and enhances the ECCM effectiveness of the forward link since all forward link energy can be used simultaneously by each RCV receiver. Improved forward link carrier and pseudo noise (PN) code tracking at high jammer-to-signal ratios is facilitated by the continuous availability of the signal to the RCV receiver since the receiver tracking loop can be operated at reduced bandwidth while maintaining lock on a continuous signal. In the event of RCV receiver loss of lock due to temporary propagation path obstruction, reacquisition of the forward link signal by a simple serial search technique is facilitated by the continuously transmitted signal. In this manner, complex parallel signal acquisition hardware is avoided, contributing to RCV electronic simplicity.

A gated carrier signal structure is employed whereby every sixth PN chip interval of the transmitted signal is not modulated by the data, but is transmitted as a sample of carrier modulated only by the spread-spectrum PN code. This enhances receiver tracking performance and slightly simplifies receiver circuitry, by making the tracking independent of the data content or data rate.

The 60 Mpps keying rate PN coded data signal is phase-shift modulated at a 300 MHz IF, employing Binary Continuous Phase Shift Modulation (2 CPSM). The 2 CPSM waveform possesses constant amplitude and lower sidelobes than conventional phase-shift keying (PSK) modulation. This reduces RF design complexity by facilitating more efficient class C operation of the power amplifier and relaxing performance requirements on transmitter bandpass filters. Importantly, the 2 CPSM waveform reduces signal interceptability because of its more "noiselike" appearance, and thus hampers signal exploitability.

Decreased opposition exploitability of WCCM signals also is provided by employment of the continuous transmission on the forward link. Knowledge of command rates to unique RCVs is denied by this approach. Thus the jammer cannot relate return link traffic from an RCV to forward link traffic, making his determination of jamming effectiveness more difficult.

A compound highly non-linear PN code is employed on the forward link. The forward link PN code generator in each RCV is identical, and is generating the same code during a given operational period. However, provision for readily changing the code from day to day, or from one tactical operation to another, is included in the design.

Command messages from the GCS are explicitly addressed to a given RCV. Thus, each RCV detects and decodes each command message transmitted on the forward link. Subsequent to address decoding, the addressed RCV's modem outputs the command message to its associated avionics or flight control system. Employment of addressed command messages on the forward link enhances the efficiency and flexibility of the RCV command and control system. It provides flexible command message rates to each deployed RCV and permits an RCV's command rate to be adjusted in accordance with operational and mission phase needs.

The required 2000 bps information rate for each of 25 RCVs can be accommodated by a combined 50 Kbps information rate on the forward link. A 60 Kbps data rate is employed on this link, providing 2400 bps per vehicle including error detection coding redundancy. 30 dB of spectrum-spreading processing gain is employed in the forward link, resulting in a 60 megachip per second direct sequence spread spectrum signal transmission rate.

Forward link message transmission is based on a 1/30 sec frame interval. This facilitates a very adequate command update interval of 30 commands per second per RCV. At 2400 bps per RCV, this permits transmission of one 80-bit command to each RCV in each frame interval, as illustrated by the summary of the WCCM forward link message timing structures in the following topic.

The design includes provision for forward link commands designated for RCV Modem terminal control functions on occasions where required. These commands are employed to control 1) return link channel frequency selection, 2) RCV antenna pointing, if required, 3) downlink burst transmission initiation timing when in the TDMA telemetry mode, 4) selection of one of four return link transmission modes and 5) relocking of the RCV Modem transmit PN generator timing to the receive PN generator timing.

KEY FORWARD LINK FEATURES

- Continuous transmission with TDM by Ground Control Station and continuous reception by all RCVs
  - All forward link signal energy utilized by each RCV for signal tracking and reacquisition
  - Reduced signal exploitation possibilities
- Increased command flexibility and reduced vulnerability through individual addressing of RCVs
- Single PN code for forward link to all RCVs
- Extremely low probability of false message acceptance.

FULL-CAPACITY FORWARD LINK MESSAGE TIMING STRUCTURE

The modular message timing structure employed for forward link RCV command transmission provides for a maximum data rate of 2400 bits per second to each of 25 RCVs with 30 dB of processing gain.

In the full capacity mode for forward link command information transfer at 2000 bps to each of 25 RCVs, the forward link transmission frame (1/30 sec) is divided into 25 time division multiplexed message slots of 80 bits per message (see the facing figure). Each message is individually addressed to increase command flexibility and reduce vulnerability. This feature simplifies net entry and provides greater freedom in making adaptive changes in the forward link message sequence to individual RCVs. Nominally, 30 messages per second can be sent to each of the 25 RCVs. However, because of the addressing flexibility, more than 30 messages per second can be transmitted to one or more of the RCVs should criticality of the mission (or mission phase) make this desirable. Of necessity, fewer than 30 messages per second could then be sent to the remaining RCVs. Any mix of message rates to the RCVs, not exceeding an instantaneous forward link data rate of 60 Kbps, can be employed in this full capacity mode with 30 dB of processing gain realized due to the PN code keying rate of 60 Mpps employed. This results in a data rate of 2400 bps per RCV, including error control redundancy.

A fraction of the 80 bits per message is allocated to overhead such as user address (6 bits) and redundancy designed for error detection (10 bits). Thus, up to 64 bits of command data may be transmitted to an RCV in a single forward link message. This message, or block oriented data transfer method simplifies error control decoding in the RCV modem and permits application of message signal-to-noise quality measurement in the RCV modem to achieve a very low probability of false message acceptance by the modem (approximately 1 in 10^8 messages). Previous studies of tactical command and control systems for RCVs have indicated that up to 50 RCVs may be assigned to a single squadron. Thus, six bits of address have been assigned within the message structure to accommodate up to 64 RCVs per Ground Control Station forward link, although the system is required to accommodate a maximum of 25 RCVs simultaneously in flight.

As shown in the figure, each data bit in the 60 Kbps command message stream is subdivided into 1000 PN coded chip intervals to realize 30 dB of spectrum-spreading processing gain at a 60 Mpps keying rate. Every sixth PN coded chip is unmodulated by the command data to accommodate gated carrier transmission. The inclusion of signal energy for carrier tracking in this manner permits the use of coherent detection with its attendant advantages and allows carrier and PN code tracking independent of the data or data rate. Application of the binary continuous phase shift modulation to the PN coded sequence at the 60 Mpps keying rate at a 300 MHz IF results in a constant amplitude pseudo-quadriphase signal for forward link transmission.

29266-66

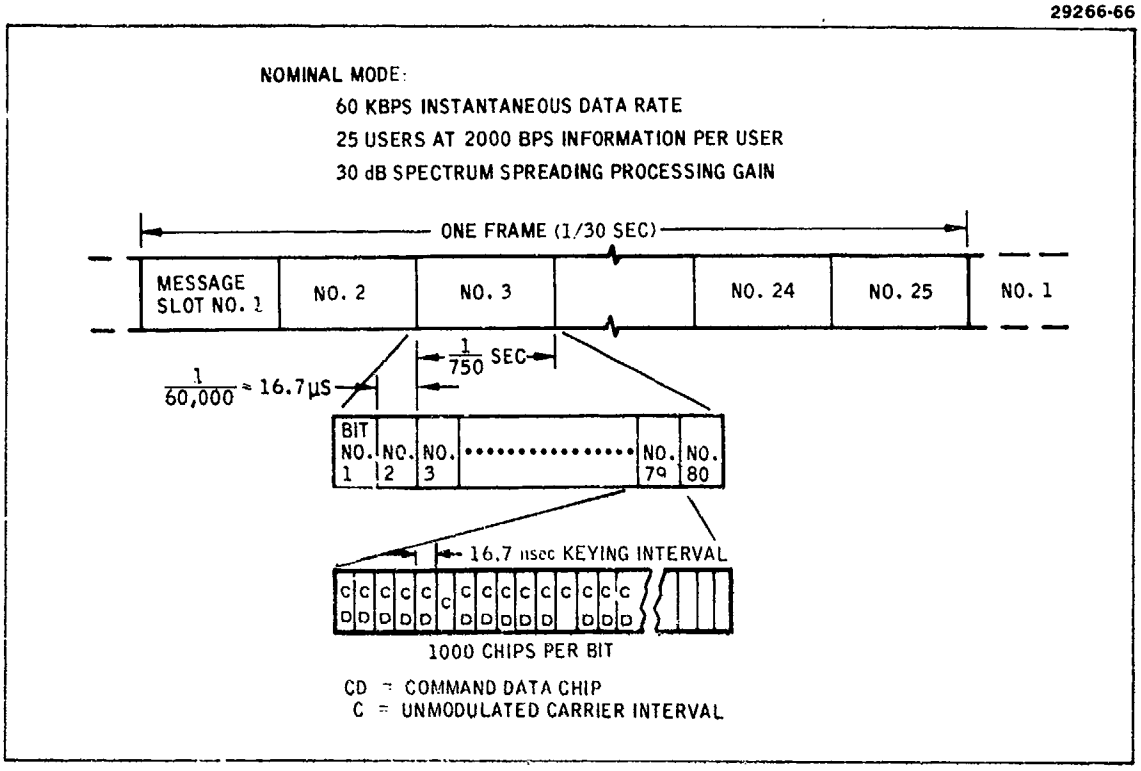

Example Reduced Data Rate Mode Message Timing Structures for the Forward Link. Up to 37 dB of spectrum spreading processing gain can be realized by modular reduction of instantaneous data rate.

FORWARD LINK MESSAGE TIMING STRUCTURES FOR REDUCED RCV DEPLOYMENT LEVELS

By modular reduction of instantaneous data rate for deployments of less than 25 RCVs, up to 37 dB of processing gain is realized for command transmissions to 5 or less RCVs.

A number of reduced data rate modes of forward link operation are accommodated by the waveform and modem designs. These facilitate employment of increased processing gain by utilizing lower instantaneous command data rates to fewer RCVs at the 60 Mpps PN code keying rate. The facing table lists the processing gain and data rates which result from transmission of fewer command messages per frame.

The facing figure illustrates the message timing structure for a sample reduced data rate mode. Each frame (1/30 sec) is divided into five message slots each five times longer than the moninal mode previously discussed. There are still 80 message bits sent to each RCV during the frame, thereby maintaining a 2400 bps data rate per RCV, but now there are 5000 PN code chips per bit rather than 1000 chips per bit resulting in 37 dB of processing gain. The other data rate modes which provide decreasing amounts of processing gain, as the number of message slots increase, permit the use of 6, 7, 8, 10, 12, 16, and 25 message slots per frame (1/30 sec). If fewer than 5 RCVs are employed, the data rates are reduced no further on the forward link, but unused message slots may be used to send an addressed message more than once to increase communication reliability, if it is needed.

FORWARD LINK MESSAGE CAPACITY AND DATA RATE MODES

Instantaneous Data Rate (Kbps)	Messages Per Frame	Processing Gain (dB)
120	50	27.0
60	25	30.0
40	16	31.8
30	12	33.0
24	10	34.0
20	8	34.8
17	7	35.4
15	6	36.0
12	5	37.0

29266-67

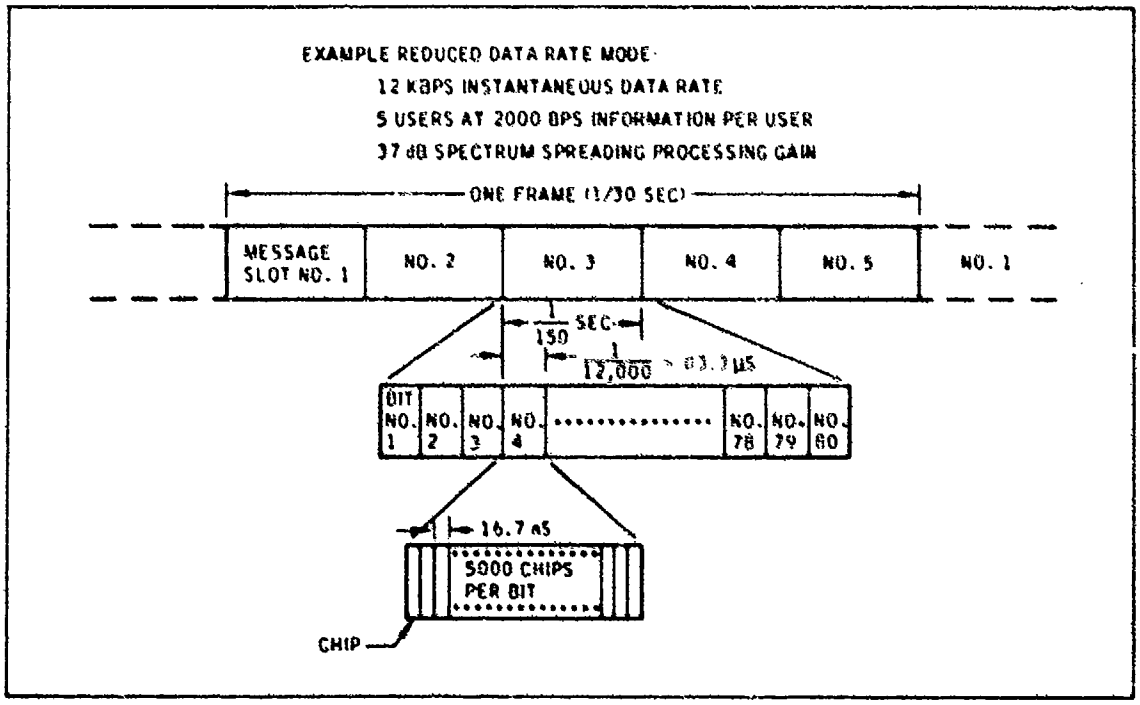

Forward Link Message Timing Structure for the Full-Capacity Mode. 30 dB of spectrum spreading processing gain is realized at a 60 Kbps instantaneous data rate.

KEY FEATURES OF THE GCS MODULATOR

The modulator section of the Ground Control Station modem transforms the sequence of forward link RCV command message to a continuous 60-Mpps keying rate, spread-spectrum, constant-amplitude signal at a 300-MHz IF.

Forward link command messages for transmission to the deployed RCV's originate at a ground station data source. (See diagram opposite.) Each of these messages is addressed to a specific RCV by that data source. The modulator section of the GCS modem sequentially time-division-multiplexes each of these messages onto the continuous forward link data stream. Each message is block-encoded with error detection parity by the modem, and the resultant parity bits are appended to the information portion of the command message. Spread-spectrum PN encoding of the message data at a 60-Mpps keying rate is then followed by binary continuous phase shift modulations (2 CPSM) of the PN coded message bit stream. The modulator output to the external GCS transmit RF assembly is a constant amplitude 2 CPSM signal at a 300-MHz IF.

A command message Multiplexer, a forward link Transmit PN Generator, and a 2 CPSM Modulator comprise the modulator section of the GCS modem Provision is included for incorporation of an optional security device if the system application of the modem dictates employment of full information security of the forward link command messages.

The multiplexer unit continuously supplies message and data clocks to the Ground Station data source. Slaved to these timing inputs, the Ground Station data source furnishes assembled messages to the multiplexer for transmission. The assembled message contains the address of the RCV for which the message is intended and the command data. Thus the control of the update rates for control messages to any RCV is determined by the GCS data source – not by the modem. The multiplexer generates the error detection code redundancy, appends it to the message, and clocks the composite message through a security device if one is being used.

The Transmit PN Generator produces a highly nonlinear compound pseudonoise (PN) pattern at the 60-Mpps keying rate employed for spectrum-spreading of the command data. Data bit and frame timing control signals are automatically derived within this generator and distributed to the remaining functional blocks within the modulator. All receive and transmit PN code generators employed in the GCS and RCV modems are identical in design. By automatic development of data bit and frame timing within the PN generators, forward- and return-link receive-signal frame and data bit synchronization is automatically achieved upon receiver acquisition and tracking of the signal PN code timing synchronization.

A spread-spectrum encoder in the 2 CPSM Modulator mixes the incoming data stream with a PN pattern clocked at the rate of 60 Mpps. The resulting 60M chips/sec sequence is 2 CPSM modulated onto a 300-MHz carrier, which is translated by the Transmit RF Assembly to the allocated RF transmission band.

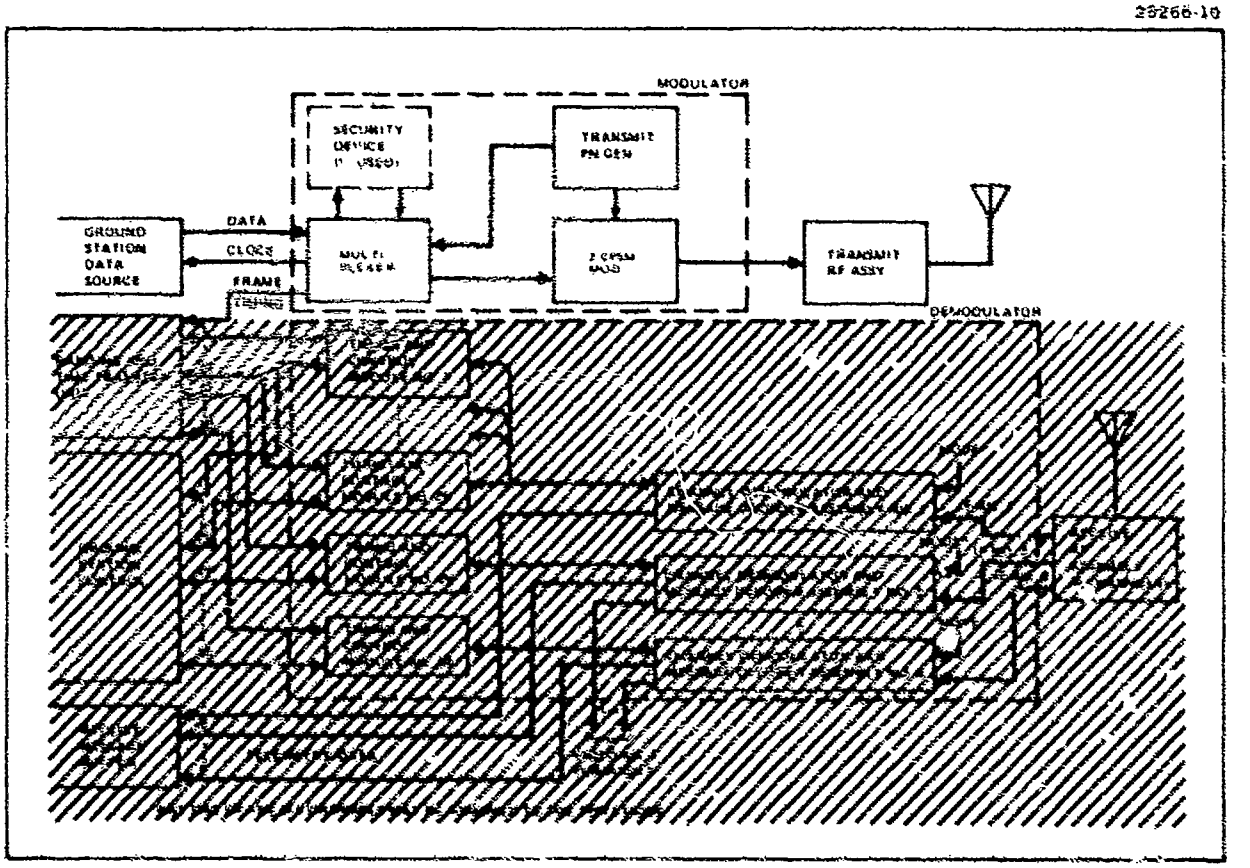

Transmit Section of the Ground Control Station Terminal. Transformation of forward link command messages to a time-division-multiplexed sequence of commands which are modulated by a 300-MHz IF, constant-amplitude 2 CPSM, 60-Mpps keying rate, spread-spectrum signal is performed by the modulator.

KEY FEATURES OF THE RCV DEMODULATOR

Receive signal processing and demodulation of the continuous forward link command transmissions are performed by the Demodulator section of the RCV Modem. Superior modem performance and high system reliability will result from the maximum utilization of digital signal processing techniques and effective employment of a measure of received signal-to-noise quality in the demodulator.

Simplicity in the design of the RCV Modem is essential to cost-effective deployment and application of remotely controlled vehicles in future military operations. Since spread-spectrum, anti-jamming signal demodulation is a more complex process than modulation of such signals, this is particularly true of the Demodulator section of the RCV Modem. Employment of a continuously transmitted forward link signal for command transmission to the RCVs aids simplication of the RCV Demodulator design. More importantly, however, highly reliable and effective performance with relatively simple and low-cost circuit implementation results from maximum utilization of digital signal processing techniques in the Demodulator design in both the RCV and GCS modems. Analog-to-digital (A/D) conversion of the received signal is performed at IF in the 2 CPSM spread-spectrum demodulator circuit, and all subsequent RCV Demodulator signal processing functions are performed digitally. Many of these digital signal processing techniques have been implemented and proven in prior spread-spectrum modem development programs, and all may be implemented with digital integrated circuits which are currently available. They are particularly effective at negative S/N ratios where reliable performance in a jamming environment is most important. Thus, no critical or high-risk components are required to implement the design and circuit drift or alignment problems are eliminated. Higher equipment reliability and reduced production and support costs result from digital implementation. Most significantly, subsequent to the A/D conversion, no implementation losses occur which would result in degradation of signal processing performance or reduction of effective spread-spectrum processing gain.

As illustrated in the facing figure, forward link RF received at the RCV antenna is supplied through a diplexer to the Receive RF Assembly for down conversion to the recommended 300 MHz IF. This IF output is converted to a sampled, digital baseband signal in the 2 CPSM Demodulator and supplied to a Data Demodulator, a carrier Phase-Lock Loop, and a delay-lock PN Code Tracking circuit. All subsequent signal processing functions are performed digitally. Within the Data Demodulator, a measure of received signal-to-noise quality is obtained at the end of each data bit integration interval and compared against a preset threshold value. This signal-to-noise quality measure is employed in a number of automatic modem decision functions, resulting in superior signal tracking and reacquisition performance. In combination with a modest level of error detection decoding, a measure of message S/N quality is employed to produce a very low probability of false command for control message acceptance by the RCV Modem.

The Data Demodulator processes the baseband signal to redevelop the original multiplexed data bit pattern. The Data Demodulator output is routed through a security device (provisions for incorporation of security equipment are included for modem growth capability) and then to the Command Decoder.

The Command Decoder circuitry determines whether an incoming message is valid or invalid. A valid message is considered to be one with 1) correct address, 2) no parity error and 3) high data signal to noise quality.

If a valid message is detected the Command Decoder then determines if the message is a link or RCV command, and routes that message to the appropriate destination. RCV commands are routed to the RCV avionics, while link commands are routed to the RCV modem's Modulator Assembly.

In addition to allowing normal PN code time tracking, the PN Clock Control circuit functions to initiate a PN search by slewing the Receive PN Generator clock timing anytime several frames of improper parity or message quality occur. The actual PN search is generated by the PN Clock Control circuitry by slewing the Receive PN Generator clock timing in one of four modes. The four search modes associated with the modem reacquisition technique are designed for controlled slewing of the Receiver PN Generator to produce a narrow, medium, wide and then full PN pattern search. The multimode reacquisition technique allows for faster signal reacquisition because the search range is matched to the uncertainty in receive timing.

During a normal locked PN tracking condition, receive and transmit PN generator timing will be locked together. However, during any search mode the PN clock control will unlock the receive and transmit PN generator timing so that while the Receive PN Generator is being slewed, the Transmit PN Generator timing remains fixed. In this manner, effective jamming cannot be recognized by a jammer due to observed changes in RCV transmit timing coincident with the effective jamming. Re-locking of transmit and receive PN generator timing will be performed only after an appropriate up link command from the ground control station.

29266-54

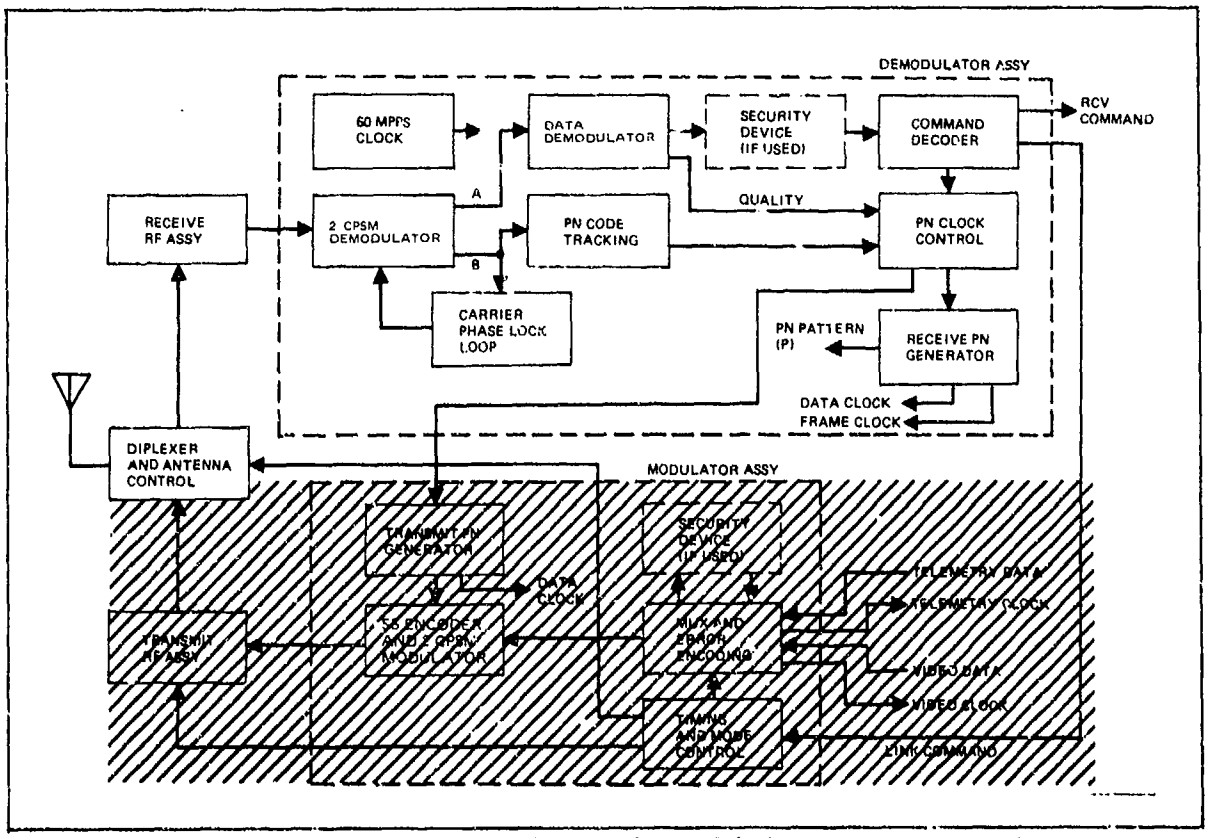

RCV Demodulator. Highly reliable and effective forward link transmission signal processing is achieved by making maximum utilization of proven digital signal processing techniques.

RETURN LINK WAVEFORM CHARACTERISTICS

Return link transmission of telemetry from up to 25 RCVs and simultaneous transmission of prime mission equipment sensor data or video from up to 5 RCVs is modularly accommodated by a six channel hybrid FDMA/TDMA return link configuration. Since telemetry data from those RCVs transmitting video is time division multiplexed with their video data, up to 30 RCVs can be accommodated by the return link.

A hybrid FDMA/TDMA return link waveform design has been selected for the WCCM. RCV terminal transmit section complexity is reduced by this approach, and the GCS terminal may be modularly configured to match a wide variety of deployment and operational requirements as a result of this waveform choice. Up to six 60 MHz bandwidth return link channels may be utilized for the configuration required to meet the maximum down link data transmission requirements, but fewer channels can be employed when operational requirements permit.

Only one channel, a burst transmission TDMA channel, is required to accommodate maximum telemetry data rates for the maximum deployment of 25 RCVs. Processing gain of 27 dB is provided on this channel at the maximum data rate and user capacity. Higher levels of processing gain are modularly achieved on this TDMA channel at reduced capacity. A gated carrier signal is employed on the return links, just as in the forward link, with every sixth PN chip interval unmodulated by data to enhance GCS receive terminal signal tracking performance. Binary continuous phase shift modulation at a PN code keying rate of 60 Mpps and an IF of 300 MHz is employed on each of the 6 return link channels, as in the forward link.

When required by operational and deployment needs, from one to five continuous transmission channels may be utilized to accommodate 20 Mbps video transmissions from one to five RCVs, respectively. For RCVs operating in the video mode, their telemetry data is time-division multiplexed at the spread-spectrum chip level with the video data as detailed below. Thus, this mode of operation is termed the "V&T Mode" (video and telemetry). By multiplexing the telemetry at the chip level, buffer storage of digitized video in the RCV is not required. This will reduce RCV avionics cost.

Since up to 25 RCVs transmitting telemetry data can be handled by the TDMA channel, and both video and telemetry from 5 additional vehicles is accommodated by the five continuous transmission channels, a total of 30 RCVs can be handled by the return link.

Where mission requirements dictate employment of additional processing gain for maximum anti-jamming effectiveness for telemetry data from a single RCV which is not transmitting video, one of the FDM channels may be employed for continuous telemetry (the CT mode) from that one vehicle at 60 Mpps chip rate, resulting in greater than 43 dB of spread spectrum processing gain.

Thus, three basic transmission modes (in addition to OFF) are accommodated by the RCV modulator and the GCS demodulators: 1) continuous video and telemetry (V&T mode) from an RCV, 2) continuous telemetry only (CT mode) at very high processing gain from an RCV, and 3) burst telemetry transmissions from up to 25 RCVs in the Time Division Multiple-Access mode (TDMA mode) at various levels of processing gain from 27 to 37 dB, depending upon the number of RCVs assigned to the channel. The first following topic delineates the message timing structures employed for the TDMA channel transmissions, while the second following topic describes the message timing structures for the 5 continuous transmission return link channels.

In normal operation, the RCV modem's forward link receive and return link transmit PN generators are locked in synchronism. The same PN code is employed by all RCVs on the forward link, but each RCV generates and transmits a unique PN code on the return link. This provides for implied addressing of RCVs on the return link, and eliminates the need for inclusion of overhead for RCV address bits in return link transmissions. Locked operation of the receive and transmit PN generators in each RCV modem simplifies return link signal tracking at the GCS modem on the TDMA channel, and accommodates ground station signal tracking derivation of ranging information for RCV position location. In the event of forward link signal tracking loss by an RCV (due to excessively long signal fades or intensive jamming), the RCV modem automatically disables the locking of its receive and transmit PN generators. In this manner, down-link video and/or telemetry transmission can continue and be tracked by the GCS modem while the RCV receive PN generator is being slewed for reacquisition of the forward link signal. When forward link reacquisition is achieved, a status bit so designating is set in the RCV's return link status report to notify the GCS. The GCS may then initiate a link command to relock the RCV's transmit and receive PN generators.

KEY RETURN LINK FEATURES

- Remotely Assignable RCV:
  - Transmit frequencies (any one of 8)
  - Transmit modes (any one of 3)
  - Transmit timing (to nearest data bit time)
  - Antenna pointing (to nearest 11° increment)
  - Receive – transmit timing lock
- Modification of the frequency, mode, timing, and antenna selection by commands
- Selectable 27 dB to 37 dB processing gain on TDMA telemetry
- Hybrid TDMA and FDMA link
- Equal length for all RCV burst transmissions for a single deployment
- Unique transmit PN code for each RCV.

RETURN LINK TDMA CHANNEL MESSAGE TIMING STRUCTURES

A single 60 MHz-channel provides for TDMA burst transmission of telemetry from 25 RCVs, at 27 dB processing gain, with modularly increasing processing gain up to 37 dB for deployments of fewer RCVs.

In the full-capacity Time Division Multiple Access (TDMA) mode each of up to 25 bursts of 44 bit intervals may be transmitted within a 1/60-second half-frame period as shown in Figure A. The first four bit intervals of each burst contain no data but consist of PN encoded carrier. The purpose of that element of energy is to provide time for the GCS downlink receivers to re-acquire the carrier phase each time a burst arrives at the GCS. The data clock rate within each burst is 120 Kpps. A 60 Mpps keying rate 2 CPSM structure identical with that of the forward link is used. Each data bit contains 500 PN coded chips for 27 dB of spectrum-spreading processing gain (as opposed to 30 dB for a 25 RCV forward link). As in all WCCM transmissions, every sixth chip is PN encoded carrier, containing no data modulation, for the express purpose of receiver carrier tracking in order to permit the use of coherent demodulation. The guard times are sufficient in this mode to allow relatively loose packing geometry of around 50 nmi. Therefore, little control traffic is required by the GCS to command the RCV to change its burst transmit timing point within a half-frame. For the 25-burst half-frame, the burst message length is 367 μs and the average guard time is 300 μs. In each of the selectable reduced data rate modes, the number of bursts per half-frame is fewer than 25. For each of these modes, the bursts are longer, while the guard times remain about the same.

A number of reduced data rate modes, which provide increased spread-spectrum processing gain for reduced RCV capacity in the TDMA channel, are provided by the waveform and modem design as shown in the table below. The TDMAs per half-frame are defined as the maximum number of accesses with a minimum average guard time per access of 300 μs (50 miles).

RETURN LINK MODULAR ACCOMMODATIONS FOR REDUCED CAPACITY AND INCREASED SPREAD-SPECTRUM PROCESSING GAIN

Instantaneous Data Rate (Kbps)	TDMAs per Half-Frame	Processing Gain (dB)
120	25	27.0
60	16	30.0
40	11	31.8
30	9	33.0
24	7	34.0
20	6	34.8
15	5	36.0
12	4	37.0

Figure B illustrates the message timing structure for an example of reduced data rate TDMA mode for a given deployment which results from lengthening each burst message (5 in this case) by a factor of 8 as compared with the burst for the nominal TDMA mode of 25 bursts. There are still 40 bits of message sent by each RCV to the GCS, thereby maintaining a 2400 bps gross data

rate; but now there are 4000 chips per bit rather than 500. The guard time average is 0.4 ms or about 65 nmi, while the burst message length is 2.9 ms. The other data rate modes which provide decreasing amounts of processing gain, as the number of message bursts increase, permit a maximum use of 4, 6, 7, 9, 11, 16, and 25 bursts per half-frame (1/60 second); thus the return and forward link share compatible modularity with respect to the number of RCVs deployed in reduced data rate modes. The guard times for the aforementioned modes are maintained at a minimum of 300 μs or 50 nmi.

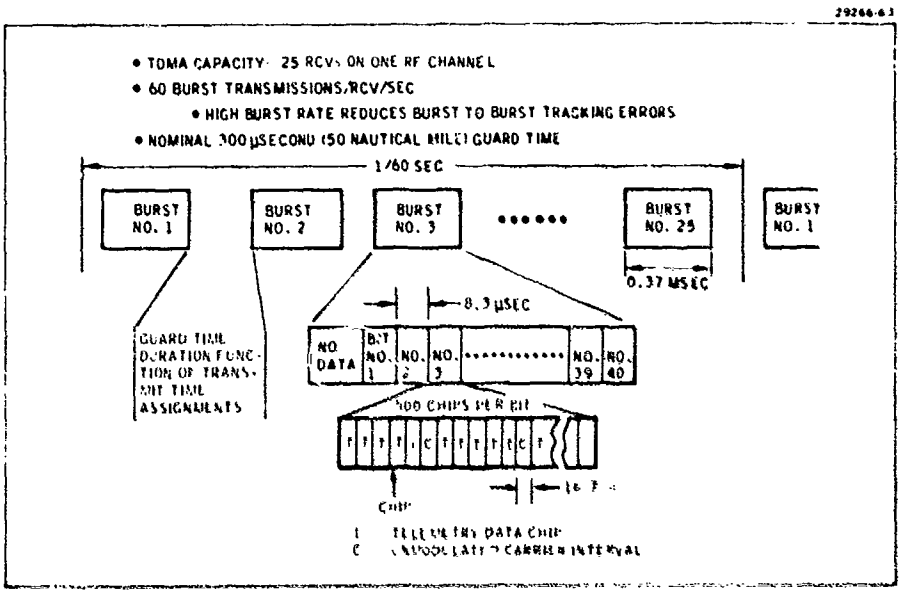

Figure A. Full Capacity Mode TDMA Return Link Message Structure. A 120-Kbps instantaneous data rate and 60 Mpps keying rate provide 27 dB of processing gain for 25 RCVs on a single channel.

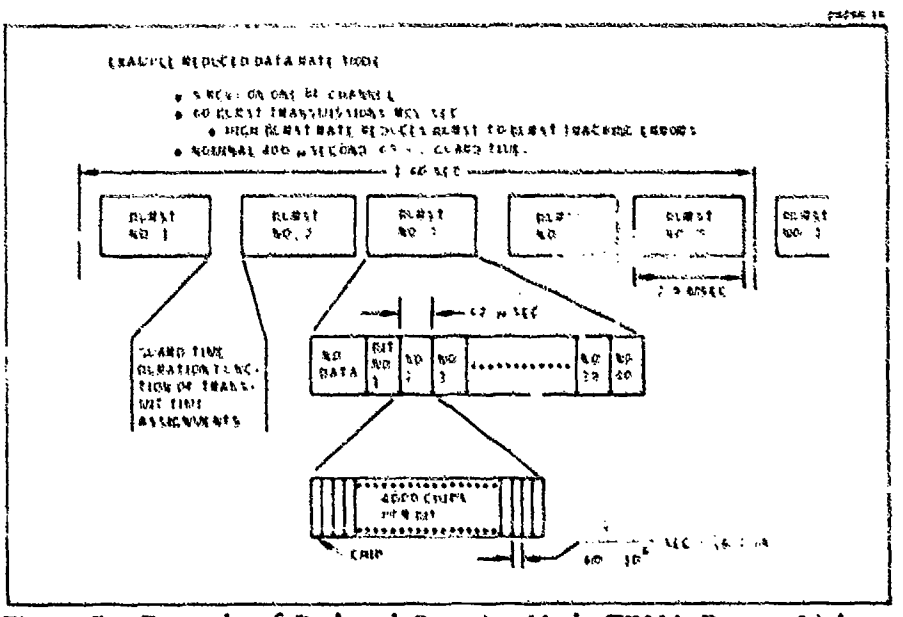

Figure B. Example of Reduced Capacity Mode TDMA Return Link Message Timing Structure. Increased processing gain results from using longer bursts and a reduced instantaneous data rate for fewer RCVs.

MESSAGE TIMING STRUCTURES FOR THE CONTINUOUS TRANSMISSION RETURN LINK CHANNELS

Employment of a separate continuous transmission channel for each RCV operating in a video data (or other prime mission equipment sensor data) transmission mode simplifies the RCV modulator and transmitter while also eliminating the need for buffer storage of digitized video in the RCV.

Integration of the high data rate prime mission equipment (PME) sensor data transmissions into the TDMA burst transmission return link channel would increase the cost of each RCV in several ways. A keying rate of 200 Mpps or more would be required, which would increase the RCV modulator cost. Achievement of sufficient energy per bit on this high data rate sensor data for reliable transmission in a burst mode would have a severe impact on the performance requirements and cost of the RCV transmitter power amplifier and power supply. Further, intermittent burst transmission of digitized sensor data, occurring at an average continuous data rate of up to 20 Mbps, would require provision of considerable buffer storage (in the order of 100,000 bits) in the RCV avionics equipment which supplies this data to the modem. Further, many RCV operational uses will not require the capability for high data rate PME sensor data. The overall system cost penalty for these increased performance capabilities in each RCV would be high since as many as 50 RCVs may be assigned to an RCV squadron ground control station.

Employment of a separate continuous transmission return link channel for interleaved video and telemetry transmission from an RCV eliminates these cost impacts on the RCV. While en route where only return link telemetry transmission is required from the RCV, the TDMA burst transmission mode described in the previous topic would be employed by that RCV on the single TDMA channel shared by other RCVs. Upon reaching the mission objective area where video or other PME sensor data transmission is required from the RCV, a link command message transmitted over the forward link from the ground control station would be used to switch the return link channel frequency and transmission mode for that RCV. The return link mode accommodating continuous transmission of video and telemetry from a single RCV is termed the V&T (video and telemetry) Mode.

As shown in Figure A, the V&T Mode waveform design interleaving of the video data and telemetry data is performed at the spectrum-spreading PN code element (chip) level to eliminate the need for video buffer storage.

A full 60 MHz channel is used for sending the video data, 40 bits of telemetry being sent each half-frame (1/60 second) to give an effective 2400 bps telemetry rate and over 4000 telemetry chips being sent per telemetry data interval. This action results in 36 dB of processing gain for the telemetry data.

At a video rate of 20 Mbps, two chips are sent for each video bit; then a telemetry chip is sent; two more video chips (1 video bit); and then one chip of gated carrier. This process is continued on a 6-chip cycle. If a 10 Mbps video signal were to be sent, 4 chips of video would correspond to 1 video bit. The inclusion of video rates of 5 and 2 Mbps in the modem designs corresponds to sending 8 and 20 chips for each video bit, respectively.

Although not specified as performance requirement, a return link mode of continuous telemetry (CT) is available as a direct consequence of the V&T mode. Here a full 60-MHz channel is employed, and the timing is identical with the V&T mode, except that the energy that was used for video is now used for telemetry (see Figure B). Thus every sixth chip is for the gated carrier and over 20,000 chips are used for telemetry during each telemetry data interval. The half-frame

is the same as in all return link modes (1/60 second), wherein 40 bits of telemetry including error control redundancy are sent from the RCV. Availability of this mode is particularly useful for achieving maximum processing gain (≈44 dB) on the telemetry data from an RCV on a critical mission where the ECM threat may be severe.

29266-64

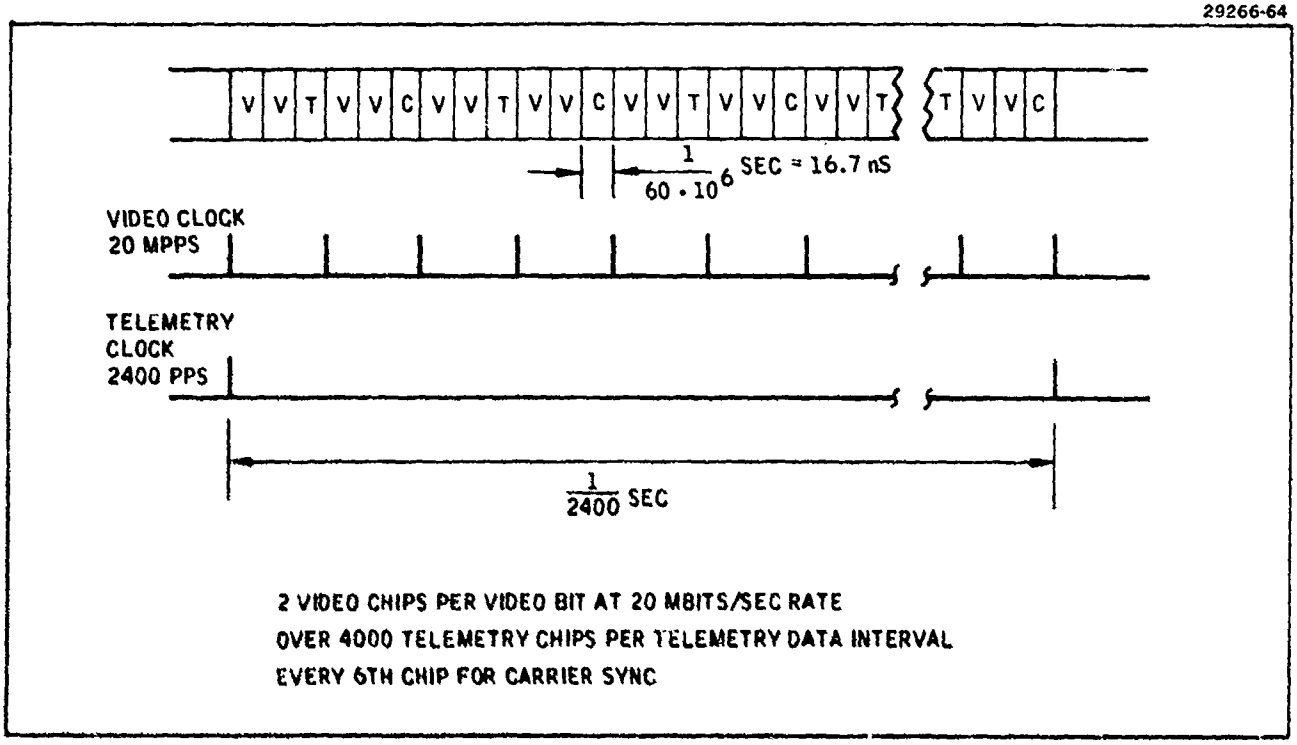

Figure A. Message-Timing Structure for the Video and Telemetry (V&T) Return Link Mode. No RCV buffer storage of video data is required and 36 dB of processing gain are provided on the telemetry data.

29266-17

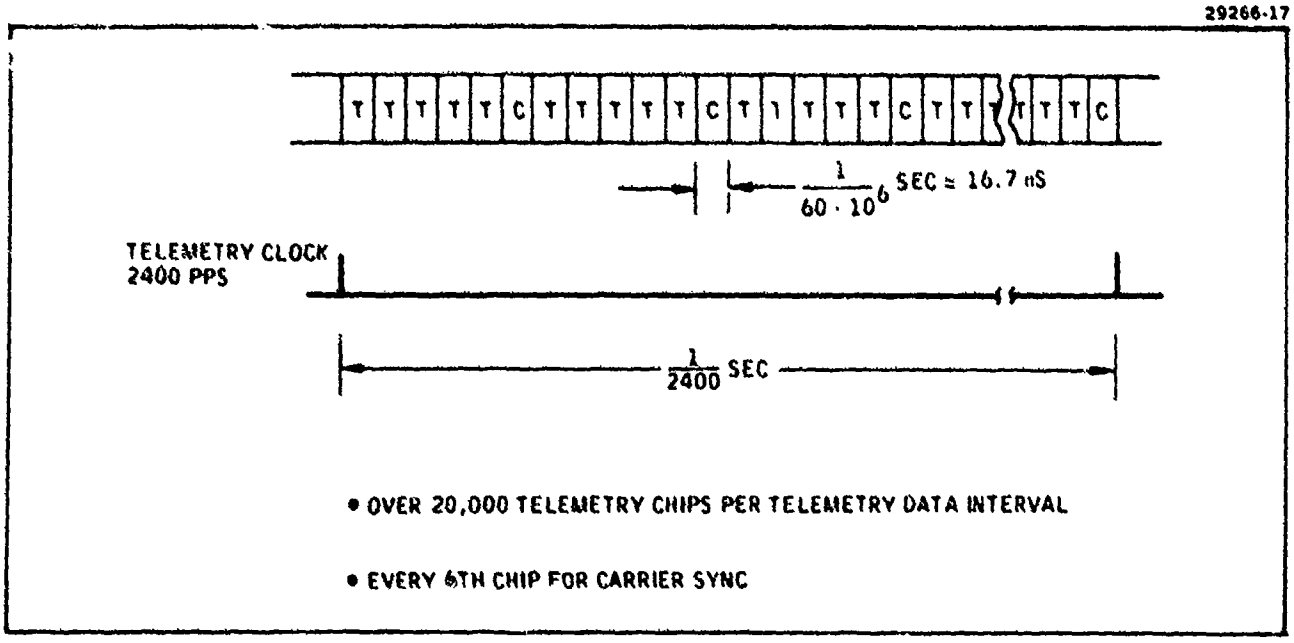

Figure B. Return Link Message-Timing Structure for the Continuous Telemetry (CT) Mode. The nearly 44 dB of processing gain for telemetry data provided by this mode result in very high ECCM performance when needed for a critical mission.

KEY FEATURES OF THE RCV MODULATOR

Simplicity of the modulator section of the RCV modem is its most notable characteristic. Further, the modulator's design places no difficult performance requirements on the RCV terminal's RF equipment and requires no RCV storage of prime mission equipment sensor data. These advantages are direct results of the selection of the hybrid FDMA/TDMA return link waveform, and they contribute significantly to reduced overall cost of the remotely controlled vehicles.

The modulator section of the RCV modem produces one of two basic types of waveforms for return link transmission to the Ground Control Station. In vehicles not requiring prime mission equipment (PME) sensor data (such as digitized video) transmission, or during the non-objective phase of missions requiring such transmissions, the RCV modulator operates in the burst TDMA telemetry transmission mode. In this mode, the RCV time shares the single TDMA channel with up to 24 other RCVs. During transmission of digitized video, or other digital PME sensor data the RCV modulator operates in a continuous transmission mode on the one of five RF channels dedicated to that RCV during the phase of its mission requiring such transmissions. In either mode, the transmitted waveform is a 60 Mpps keying rate, constant amplitude, binary continuous phase shift modulated (2 CPSM), 300 MHz IF waveform.

Reduced performance requirements (and thus lower cost) on the RCV modulator are a direct result of the multichannel hybrid FDMA/TDMA waveform design selected for the return link and also enhance the cost effectiveness of the entire RCV. In fact, much of the RCV modulator circuitry is identical to that of the GCS modulator. This contributes to reduced cost of the GCS modem, since it can use circuit modules developed for use in a relatively large quantity of RCVs.

In the Timing and Mode Control function of the RCV modulator, the RCV's transmitted message format and transmission mode are controlled. A link Command Register containing link commands received by the RCV over the forward link provides the basis for generation of the timing and mode control signals. These commands, received from the Ground Control Station, determine which of the return link modes of operation and RF channels are used by the RCV for downlink transmission. Additionally in the TDMA burst transmission mode, transmit timing control information received from the GCS for return link guard time management, determine which of 1000 instantaneous data bit intervals within the downlink half-frame will be used for initiation of the burst. This feature permits very effective, yet simple, management of multiple RCV burst transmissions to account for dynamic variation of RCV-to-multiple ground station ranges.

The Multiplexing and Error Encoding function performs the functions which precede spread spectrum modulation for return link transmission. In the TDMA mode, RCV status/response data is multiplexed with modem status data and error control redundancy is generated and inserted in the message. Subsequently, gated carrier intervals are multiplexed with this data at the 60 Mpps chip rate.

In the Video and Telemetry (V&T) mode, digitized PME sensor data is interleaved with telemetry data at the spread-spectrum chip level. In this manner, the incoming PME sensor data may be processed immediately upon input, with no buffering required. Thus, no temporary storage of PME data is required and cost of such storage in the RCV is eliminated.

This interleaved and multiplexed stream is mixed with the 60 Mpps spectrum spreading PN pattern from the Transmit PN Generator in the SS Encoder

and 2 CPSM Modulator. Binary Continuous Phase Shift Modulation of this encoded chip stream is performed prior to output from the RCV modem to the Transmit RF Assembly. Both the Transmit PN Generator and the 2 CPSM Modulator are identical to those employed in the GCS Modulator.

The RCV Modem's Transmit PN Generator is normally locked to its Receive PN Generator. Although the RCV transmits only short intermittent bursts in the TDMA mode on the return link, the RCV's transmit PN code continues to "run" between these bursts, since it is locked to the continuous forward link PN code. This facilitates range measurements at the ground control station by measurement of time differences between GCS transmitted and received PN sequences.

29266-85

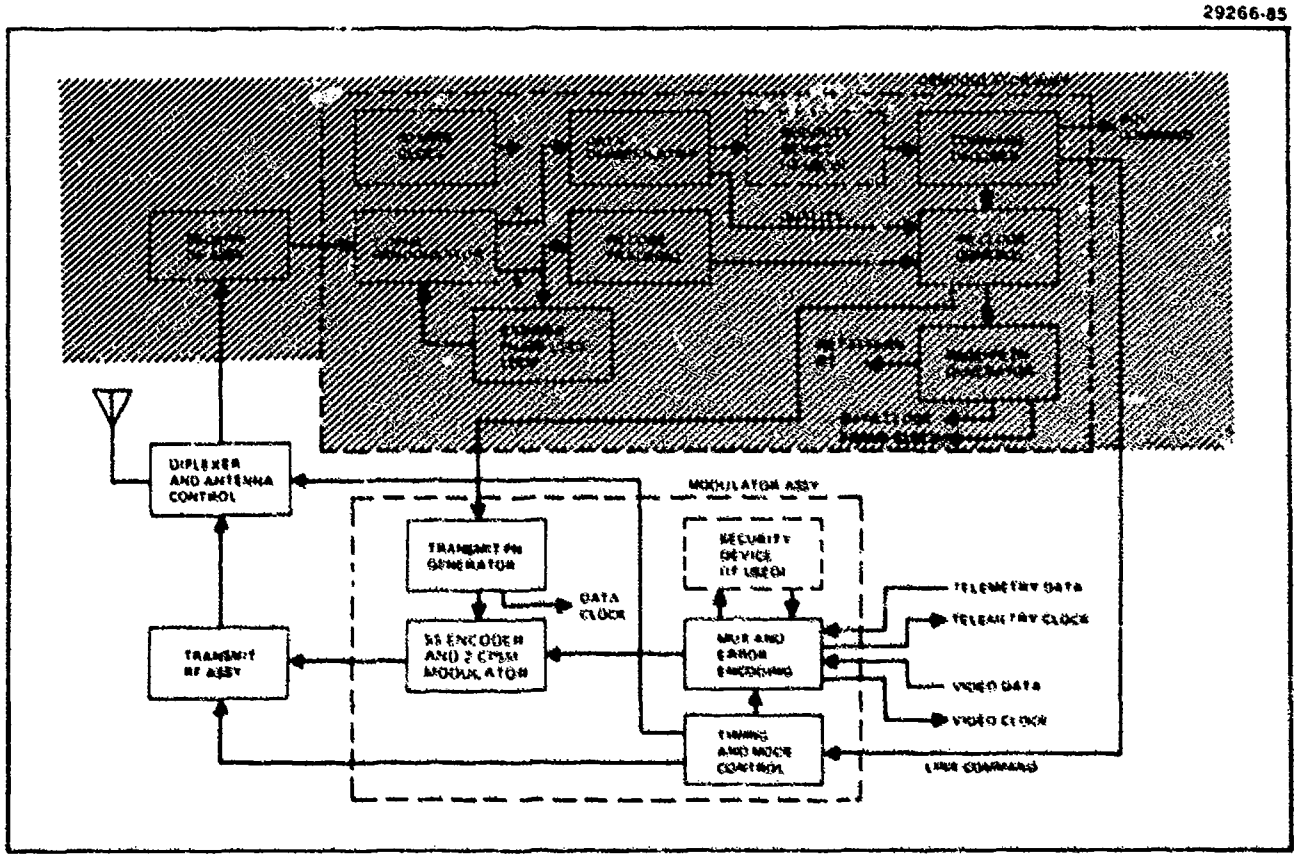

Modulator Section of the RCV Modem. This multi-mode modulator develops 60 MPPS keying rate continuous signals for Video and Telemetry mode or Continuous Telemetry mode transmissions, and produces short burst signals at that keying rate for transmission in the TDMA mode.

KEY FEATURES OF THE GCS DEMODULATOR

A wide range of ground station capabilities will be required in future RCV systems to meet specific operational needs and deployment levels. The ground station demodulator has been modularly designed to be economically and very effectively configured to satisfy the particular requirements of any of this range of system operational needs.

Architecture of the GCS Demodulator – The return link waveform design described in the previous topics employs six RF channels for RCV-to-ground station communication in a maximum capacity network. Five of these channels accommodate continuous transmission of up to 20 Mpps digitized prime mission equipment (PME) sensor data from each of five RCVs. A sixth burst transmission TDMA channel provides for multiple access communication of telemetry data from up to 25 additional RCVs. Thus, in its maximum capacity configuration, the GCS demodulator processes signals from six independent return link channels and from up to 30 RCVs.

Because of employment of up to six FDMA downlink channels, the six channel Receive RF Assembly supplies six independent IF signals simultaneously to the Demodulator. Thus, six identical channel Demodulator and Message Decoder Assemblies (CDMDA's) are provided. Five of these assemblies service the five channels devoted to the up to five RCV downlink transmissions of multiplexed status/response data and 20 Mpps digitized PME sensor data. The sixth CDMDA services the burst transmission TDMA return link channel.

Each CDMDA extracts the transmitted data, performs carrier tracking, and derives PN code advance/retard corrections. The CDMDA also performs error detection decoding and generates valid message and receive data quality indications. Although identical in design, there are functional differences between the CDMDAs associated with the continuous channels and the CDMDA serving the TDMA channel.

When the CDMDA is assigned to perform demodulation of a return link channel used for continuous transmission from a single RCV, the CDMDA is in continuous interface with one (and only one) Timing and Control Module (TCM). The TCM provides necessary timing references for appropriate message demodulation, and a synchronized replica of the PN pattern employed by the continuously transmitting RCV for message PN encoding.

The CDMDA which operates in the TDMA mode (i.e. demodulates burst transmissions for different RCVs received separated in time), is interconnected with 25 TCMs. Each of these TCMs is associated with a unique RCV, generating the PN code of that RCV. The connection between the CDMDA and each of the TCMs is continuous. However, determination of the time when a specific TCM is to make use of the CDMDA outputs and when that TCM is to inject timing and PN code data into the CDMDA for meaningful demodulation is performed by each individual TCM.

As in the RCV Modem, a compound PN Sequence Generator in each TCM automatically derives receive data bit and message synchronization timing, when PN code tracking is achieved. In addition to containing a PN generator, each TCM also contains PN search and slew control circuitry, required for acquisition and maintenance of synchronization between the ground and RCV generated PN patterns. A TDMA Switch Control circuit incorporated into each TCM determines, under the control of the Ground Station Control, the time of initiation and duration a specific TCM is to have active interface with the TDMA CDMDA.

Advantages of the Modular Design for the GCS Demodulator – The partitioning of GCS demodulator functions between the CDMDA modules and the TCMs has emphasized incorporation of all possible demodulation functions in the CDMDAs, since only six of these modules are required in a full-capacity GCS modem. Only those few functions such as PN code generation and tracking which are unique to each RCV are performed by the compact, but more numerous, TCMs. In this manner, the repetition of circuit functions is minimized, resulting in lower cost of the GCS modem.

This modular design concept for the GCS modem readily accommodates reduced cost configuration of the modem for employment in ground stations servicing RCV deployments requiring less than the specified maximum return link communication capacity. For example, if no digitized video or other prime mission equipment sensor data transmission is required, only one Channel Demodulator and Message Decoder Assembly is required to service single channel TDMA telemetry transmissions from up to 25 RCVs. Additionally, the number of Timing and Control Modules provided in the GCS modem need only equal the maximum number of RCVs expected to be controlled from that ground station, plus one additional TCM for each continuous channel required to accommodate PME sensor data reception.

Much of the circuit design utilized in the CDMDA and TCM modules is identical with the circuit designs for the corresponding functions of the demodulator in the RCV Modem. This commonality with the circuits of the relatively large number of RCV Modems which will be produced enables reduced production cost for the GCS Modems which will be required in significantly smaller quantities. Further, nearly all GCS demodulator signal processing is performed digitally. Thus, the improved reliability, enhanced signal processing, and reduced production and support costs associated with digital implementation are also realized in the GCS modem design.

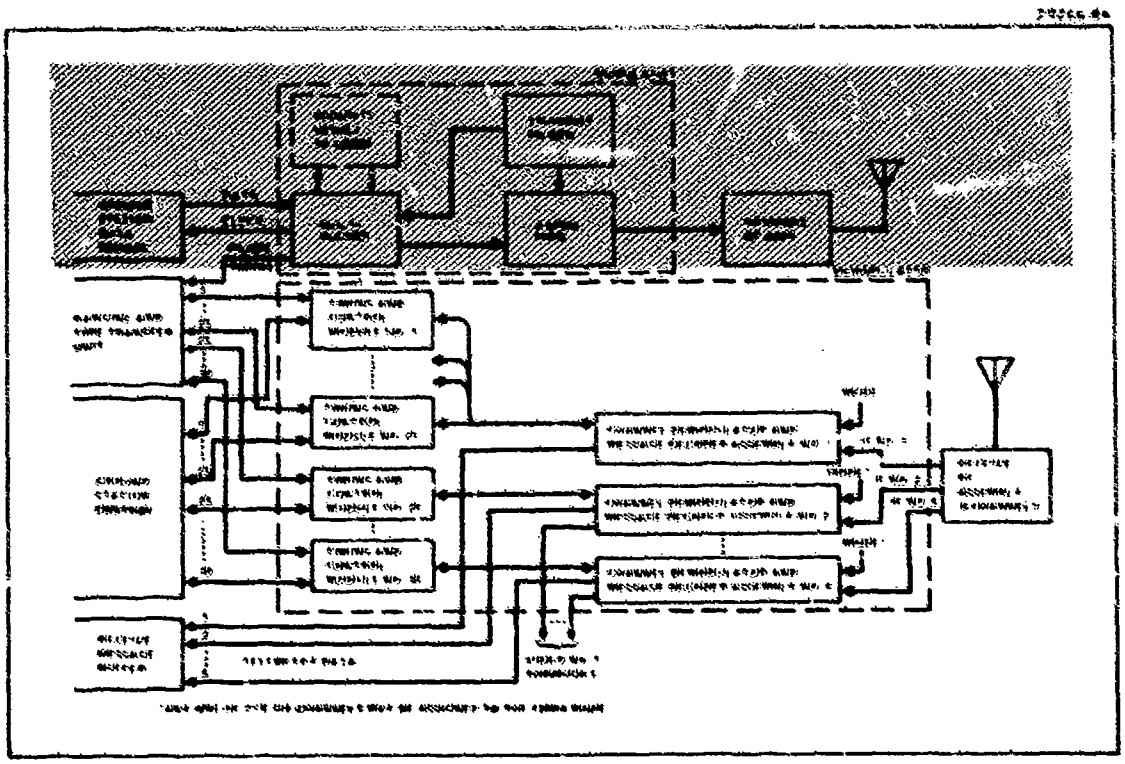

Demodulator Section of the GCS Modem. This multichannel demodulator employs a modular design approach with optimum allocation of functions to the two module types.

SECTION 4
FUNCTIONAL DESCRIPTION OF THE WCCM TERMINALS

Ground Control Station Terminal: Transmit Section

Overview of the GCS Modulator 4-0
Pseudo Noise Code and Basic Timing Generator 4-2
GCS Transmit Multiplexer 4-4
Binary Continuous Phase Shift Modulator 4-6
GCS Transmit Radio Frequency Assembly 4-8

Remotely Controlled Vehicle Terminal: Receive Section

Overview of the RCV Demodulator 4-10
Description of Receive RF Assembly 4-12
Description of 2 CPSM Demodulator 4-14
Description of Carrier Tracking Loop 4-18
Pseudo Noise Code Tracking 4-20
Description of the Digital Data Demodulator 4-22
Pseudo Noise Clock Control Function 4-24
RCV Signal Acquisition and Reacquisition Technique 4-26
Description of Command Decoder Logic 4-28

Remotely Controlled Vehicle Terminal: Transmit Section

Overview of the RCV Modulator 4-30
Multiplexer and Error Encoder 4-32
Transmit Timing and Mode Control Circuitry 4-34
Description of Transmit RF Assembly 4-36

Ground Control Station Terminal: Receive Section

Overview of GCS Demodulator 4-38
GCS RF Assembly 4-40
Channel Demodulator and Message Decoder Assembly 4-42
Timing and Control Module Functions General Description
and Continuous Mode Operations 4-44
Timing and Control Module Functions in TDMA Mode
of Operation 4-46

OVERVIEW OF THE GCS MODULATOR

Employment of a continuous forward link transmission waveform permits simple, straightforward implementation of the GCS modulator.

The GCS modulator is quite straightforward in design because of the employment of a continuous transmission forward link waveform. (Refer to the facing figure). The modulator encodes messages furnished by the Ground Station Data Source to the modem for transmission, provides necessary message timing to the Ground Station Data Source, and PN encodes and 2 CPSM modulates the transmit data stream. The Transmit PN Generator, and the 2 CPSM Modulator employed in the modulator are identical in design to those in the RCV modem. The Transmit RF Assembly, which is not part of the modem, frequency translates the 300 MHz IF output of the modulator to the RF transmit band.

The Multiplexer unit provides message and data clocks to the Ground Station Data Source continuously. Slaved to these timing inputs, the Ground Station Data Source furnishes assembled messages to the Multiplexer for transmission. The assembled message contains the address of the RCV for which the message is intended. Thus the control of the up-data rates for control messages to any RCV is determined by the Ground Station Data Source, not by the modem. The Multiplexer generates the error detection code redundancy, appends it to the message, and clocks the composite message through a security device if one is being used.

The Spread Spectrum encoder, which is part of the 2 CPSM modulator, mixes the incoming data stream with a PN pattern clocked at the rate of 60 Mpps. The resulting 60Mchips/sec sequence is 2 CPSM modulated onto a 300 MHz carrier, which is translated by the Transmit RF Assembly to the allocated RF transmission band.

29266-79

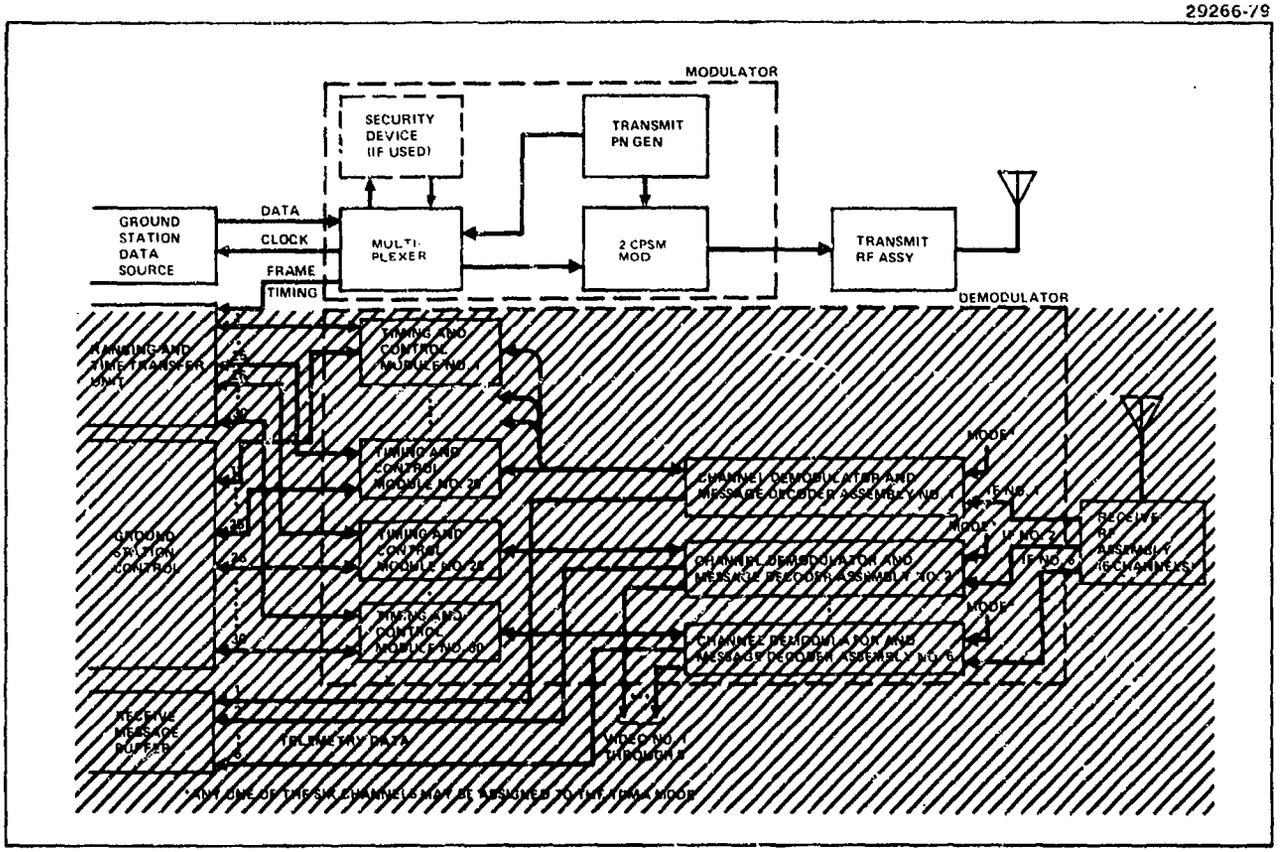

Ground Control Modulator. The Transmit PN Generator, and the 2 CPSM Modulator employed in the GCS Modulator are identical in design to those in the RCV modem.

PSEUDO NOISE CODE AND BASIC TIMING GENERATOR

A three-element compound pseudo-noise (PN) generator is employed to produce a highly nonlinear compound spectrum-spreading code. The lengths of the individual sequences which produce the compound sequence are chosen to match the link data bit and frame timing intervals. As a result, data bit and frame timing are automatically acquired by the demodulators upon acquisition of PN code synchronization.

An identical PN generator design is employed in the modem designs for 1) the forward link PN code generators in the GCS modem modulator and the RCV modem demodulator and 2) for the return link PN code generators in the RCV modem modulator and the GCS modem demodulator. Each of these four PN generators is comprised of three individual sequence generators. (See schematic opposite.) The three-element compound generator provides modem data bit and frame element timing clocks, as well as a spectrum-spreading PN code sequence. (Refer to the table opposite.)

Each of the three generators is a nonmaximal length generator, and each generates a slightly nonlinear PN sequence. The individual sequence lengths are chosen to provide convenient generation of timing pulses for control of modem functions. By development of transmission frame, message, and data bit timing signals from the PN sequence generators, the receive modems automatically develop these timing pulses upon acquisition of PN code synchronization. This development simplifies receiver synchronization circuitry.

One generator develops a 501-chip sequence, while a second generator develops a 4000-chip sequence. The product of these two sequences is a pattern slightly greater than 2 million chips in length. At the 60 Mpps chip rate, this arrangement results in a transmitted compound, highly nonlinear, PN sequence which is nonrepeating within each 1/30-sec frame interval. The third sequence generator (+Z) is employed to introduce an additional randomizing component into the compound sequence. External, manually entered preset of the initial state (or feedback connections) of this generator provides for convenient change of the generated compound sequence from one mission (or operation) to another.

The return link PN generators are identical in structure and circuitry with the forward link generators. However, for the return link, the preset of the +Z generator is different for each deployed RCV, permitting implied RCV addressing through employment of a different PN code for each.

The 120 Kpps signal is applied to a ÷ N circuit to develop the desired data clock for modular processing gain adjustment with reduced RCV deployments. The chart lists the possible data clock frequencies corresponding to the spectrum-spreading processing gains and the number of messages transmitted by the GCS per uplink frame interval (1/30 second). Since 25 RCVs represent the specified maximum number of vehicles per deployment, the 120 Kpps clock (corresponding to 50 messages per frame) will normally not be used.

The 120 kpps signal is divided by 2 to develop a 60-Kpps clock which, in turn, is divided by 25 to develop a 2.4 Kpps clock. These clock frequencies, along with the 60 Mpps and data clocks, are used for general timing functions throughout the modem.

The +501 and +4000 shift register outputs are mixed with the +Z output to generate a composite PN pattern. The Z value might typically be 64, which would allow 64 independent PN codes to be generated. Sixty-four independent PN codes would result in 64 degrees of freedom by varying the start point of the +Z circuit in any one of 64 positions.

Presently the Z value selection is envisioned as being implemented with thumb wheel switches on the PN code and basic timing generator module. Both

the GCS and RCV Modem Z values will be set to some common number prior to RCV deployment. The external reset signal can be used for the manual resetting of all timing functions in the PN code and basic timing generator. The reset function is performed by the frame clock during normal operation.

DATA CLOCK RATES DEVELOPED BY FORWARD LINK PN CODE GENERATORS

Divisor N	Data Clock KPPS	Messages per Frame	Spectrum-Spreading Processing Gain -dB
1	120	50	27.0
2	60	25	30.0
3	40	16	31.8
4	30	12	33.0
5	24	10	34.0
6	20	8	34.8
7	17	7	35.4
8	15	6	36.0
10	12	5	37.0

29266-9

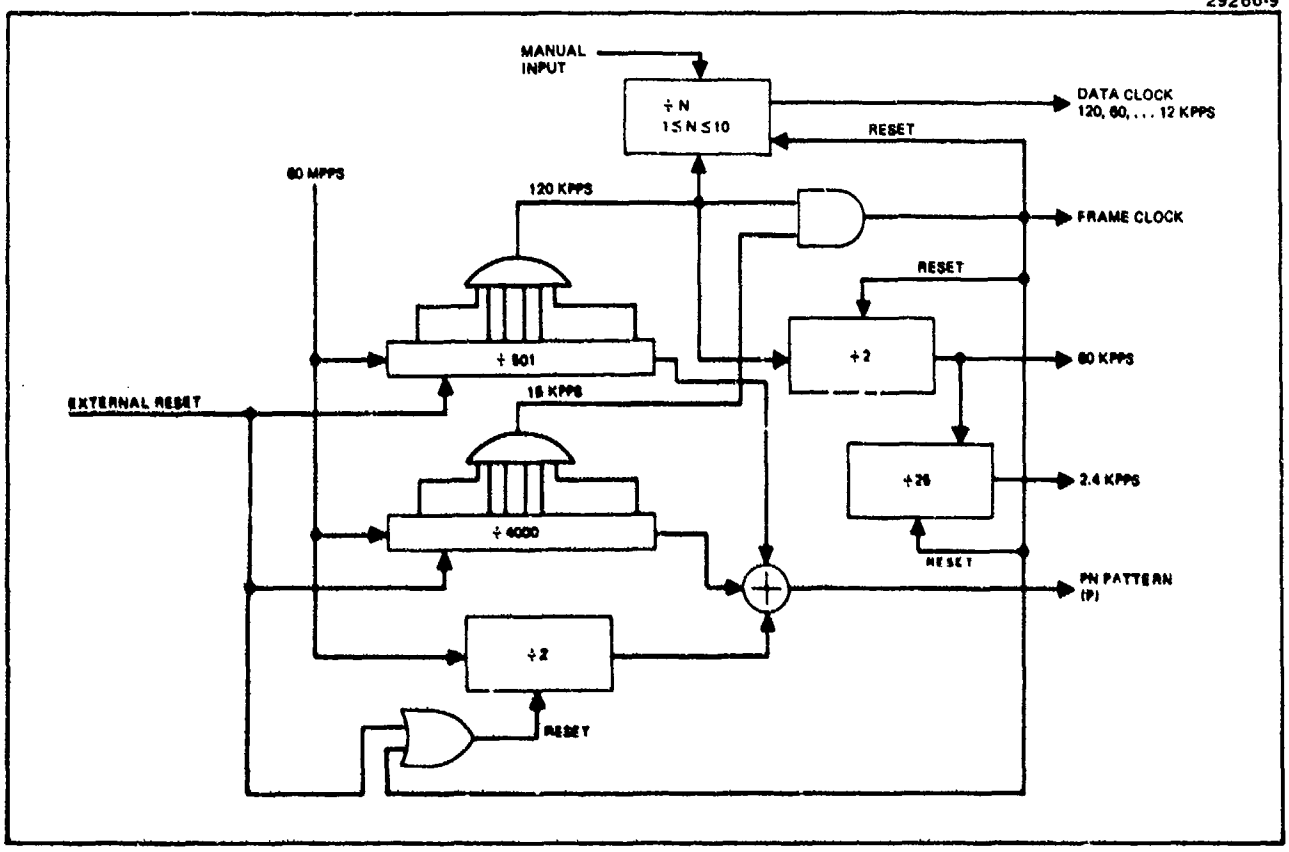

PN Code and Basic Timing Generator. This same design is employed for the transmit and receive PN code generation in both the RCV and GCS Modems; the generator develops frame and data bit timing, as well as the highly nonlinear spectrum-spreading PN code sequence.

GCS TRANSMIT MULTIPLEXER

RCV commands generated by the Ground Control Station for control of up to 25 RCVs are multiplexed onto the serial continuous transmission forward link data stream by the GCS transmit multiplexer. Each command message is block-encoded for error detection parity and is clocked into the 2 CPSM modulator at the 60 Mpps spread-spectrum chip rate.

Forward link command messages to in-flight RCVs originate at the Master Ground Control Station (MGCS) RCV controller consoles and/or are automatically generated by the computer in the MGCS. Approximately 50 RCVs are expected to be assigned to an RCV squadron associated with a MGCS, although a maximum of 25 in-flight vehicles are required to be simultaneously accommodated by the WCCM. Thus, each command message includes 6 bits for the RCV address, as well as up to 64 bits of command data. Each 70-bit command supplied is bit-serially clocked into the modem by the data clock (nominally at 60 kbps) generated in the modem. It is then block encoded for error detection in the GCS transmit multiplexer function of the modem. As a result of this process, 10 parity bits are appended to the command, to develop an 80-bit RCV command message for forward link transmission. Individual command messages are thus sequentially multiplexed into a 60 Kbps forward link continuous data stream. At the output of the multiplexer, this data stream is combined with a gating pattern at the 60 Mpps spread spectrum chip rate, such that every sixth chip is not modulated by the data. This results in a "gated carrier" signal for transmission.

The Error Detection Encoder receives assembled 70-bit command data messages from the Ground Station data source in synchronism with the message timing and data clock supplied to the Ground Station data source from the Multiplexer (see facing figure). The data bit timing, used internally in the multiplexer and supplied to the Ground Station data source, is manually selected, and can assume any of the values indicated in the previous topic. The message is clocked through the error detect encoder which adds the error detection code redundancy bits to the information resulting in an over-all encoded message length of 80 bits. This encoded sequence is encrypted (if the system employs a security device) before being furnished to the 2 CPSM modulator.

The multiplexer receives the mission selected data clock from the transmit PN Generator and the message timer divides this clock by 80 to obtain message timing. The message timer operation is locked to the frame timing, which is generated by the compound PN pattern generator. Since the RCV utilizes an identical PN generator for message reception, the data bit and frame timing of received messages are automatically derived by the RCV modem demodulator, once it has acquired PN code lock.

Before the encoded data is furnished to the 2 CPSM Modulator it is combined with the 60 Mpps carrier gate timing sequence. This sequence, also generated in synchronism with the frame timing, inhibits the data modulation input to the 2 CPSM modulator during each sixth PN code chip interval multiple following the frame timing pulse. The carrier gate sequence is generated by dividing 60 Mpps clock by six.

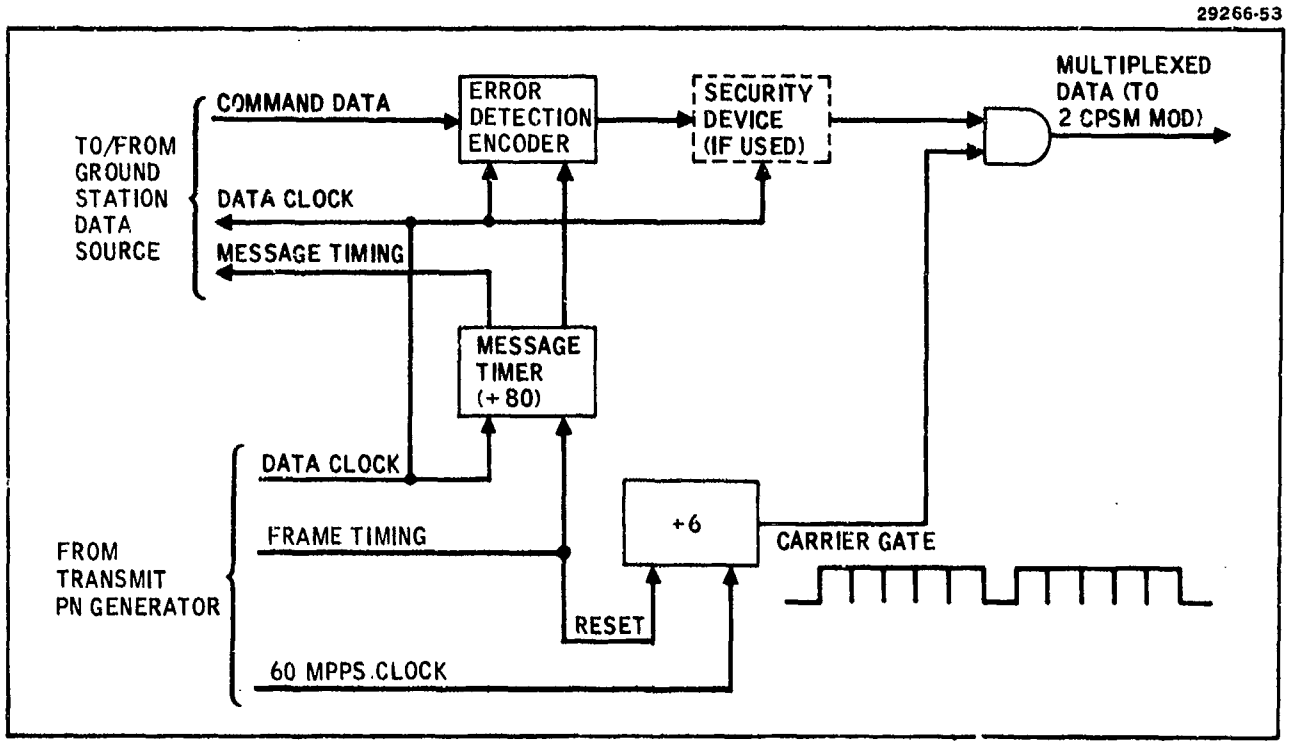

Functions of GCS Transmit Multiplexer. Time-division multiplexing and error detection encoding of RCV command messages are the principal functions of the Ground Control Station transmit multiplexer.

BINARY CONTINUOUS PHASE SHIFT MODULATOR

The 60 Mpps keying rate, pseudo-noise-encoded, spread-spectrum WCCM signal is produced by the modulator circuit. This Binary Continuous Phase Shift Modulated signal is a pseudo-quadriphase constant amplitude waveform.

The modulator circuit for Binary Continuous Phase Modulation (2 CPSM) is shown in the facing figure. The waveform characteristics of 2 CPSM are described in the following paragraphs, while a detailed description of 2 CPSM is presented in Appendix A.

Forward link command messages which have been interleaved with gated carrier intervals are digitally mixed with the 60 Mpps pseudo-noise spectrum spreading code at the input of the 2 CPSM Modulator circuit. The resultant sequence is then alternately gated into two delay flip-flops which are clocked at a 30 Mpps rate. This gating procedure effectively stretches the incoming sequence by a factor of two. As a result, the PN coded "chips" of this sequence are split into a pair of 30 Mpps keying rate sequences. The first of these sequences contains the odd-numbered chips of the PN coded message bits, while the other contains the even-numbered chips. The odd-numbered chip sequence is then mixed with the in-phase component of the 300 MHz IF which has been amplitude modulated with one phase of a cosine shaped 15 MHz waveform as shown by the figure. Simultaneously, the even-numbered 30 Mpps chip sequence is mixed with the quadrature component of the 300 MHz IF which has been amplitude modulated by a 90° phase shifted cosine shaped 15 MHz waveform. The result is a pair of cosine-shaped waveforms with 90° relative displacement of their nulls. Since the delay flip-flops and 15 MHz waveforms are both clocked from a common 60 Mpps source, the delay flip-flops will change states coincident with the nulls of the cosine shaped 15 MHz modulated waveforms.

The in-phase (I) channel 300 MHz IF has been biphase modulated (0° or 180°) by the odd numbered chip sequence, while the quadrature (Q) channel has been biphase modulated (90° or 270°) by the even numbered chip sequence. In a final summing circuit, these two waveforms (I and Q) are combined to produce a "pseudo-quadriphase" constant amplitude 2 CPSM signal at a 300 MHz IF which has a 3 db bandwidth of approximately 36 MHz at the 60 Mpps keying rate. The linear phase shifting within each 16.7 nsec chip interval and the constant amplitude envelope of the composite waveform are produced in this final summing process.

The divide by four circuit provides four 15 Mpps outputs derived from the 60 Mpps clock, all separated by 90°. Two of the four outputs are filtered to generate cosine shaped 15 MHz signals. The 15 MHz signals are then mixed with in-phase and quadrature phase components of a locally generated 300 MHz IF to create a pair of suppressed carrier double sideband waveforms. The result is a 300 MHz IF which is amplitude modulated by the 15 MHz cosine shaped signals. Due to the in-phase and quadrature phase mixing, the two waveform nulls, which both occur at a 30 MHz rate, occur at 90° spacing relative to each other.

29266-52

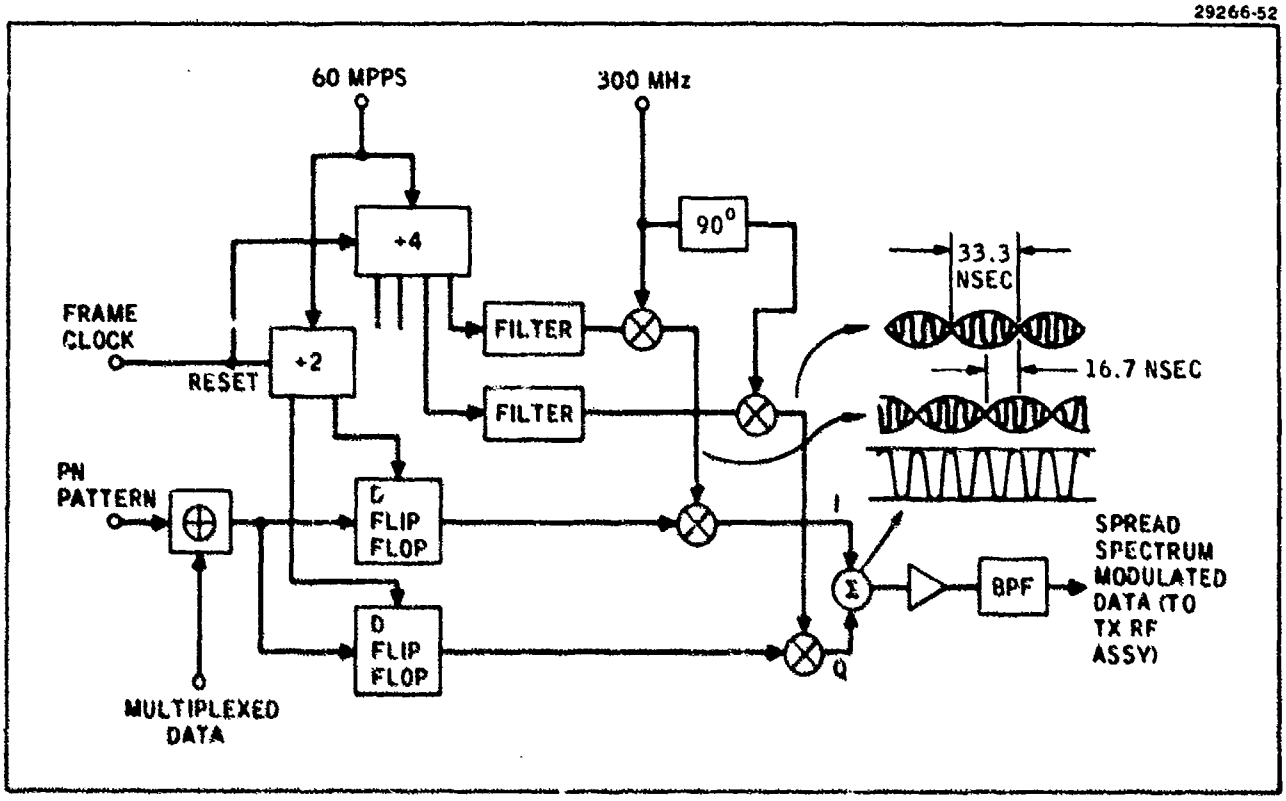

Modulator Circuit for 2 CPSM. The final summing process of this circuit produces 1) the linear phase shifting within each 16.7 nsec chip interval and 2) the constant amplitude envelope of the composite waveform.

GCS TRANSMIT RADIO FREQUENCY ASSEMBLY

Although the GCS Transmit RF Assembly is not a part of the modem, its design characteristics are influenced by the selected modulation waveform design. The RF assembly benefits from less stringent performance requirements in the employment of Binary Continuous Phase Shift Modulation for WCCM.

The 300 MHz IF output of the 2 CPSM modulator is frequency translated to the allocated RF transmit band by mixing the IF signal with a carrier which is generated by frequency multiplication of the ground station 60 MHz Master Oscillator. The RF signal is power amplified and filtered before being applied to the transmit antenna. Optional control of the forward link transmit antenna pointing from the ground station control facility will be external to the modem function. Refer to the facing figure.

Employment of the Binary Continuous Phase Shift Modulation (2 CPSM) technique in the modem design relaxes the performance requirements on the Transmit RF Assembly in two ways: (1) the constant amplitude 2 CPSM signal facilitates very efficient Class C operation of the power amplifier (PA), and (2) the reduced sidelobe amplitude of the 2 CPSM frequency spectrum simplifies the design requirements for the bandpass filter (BPF). These are two examples which illustrate the concern given during the waveform and conceptual modem design study for modem design impact on overall system performance and economy.

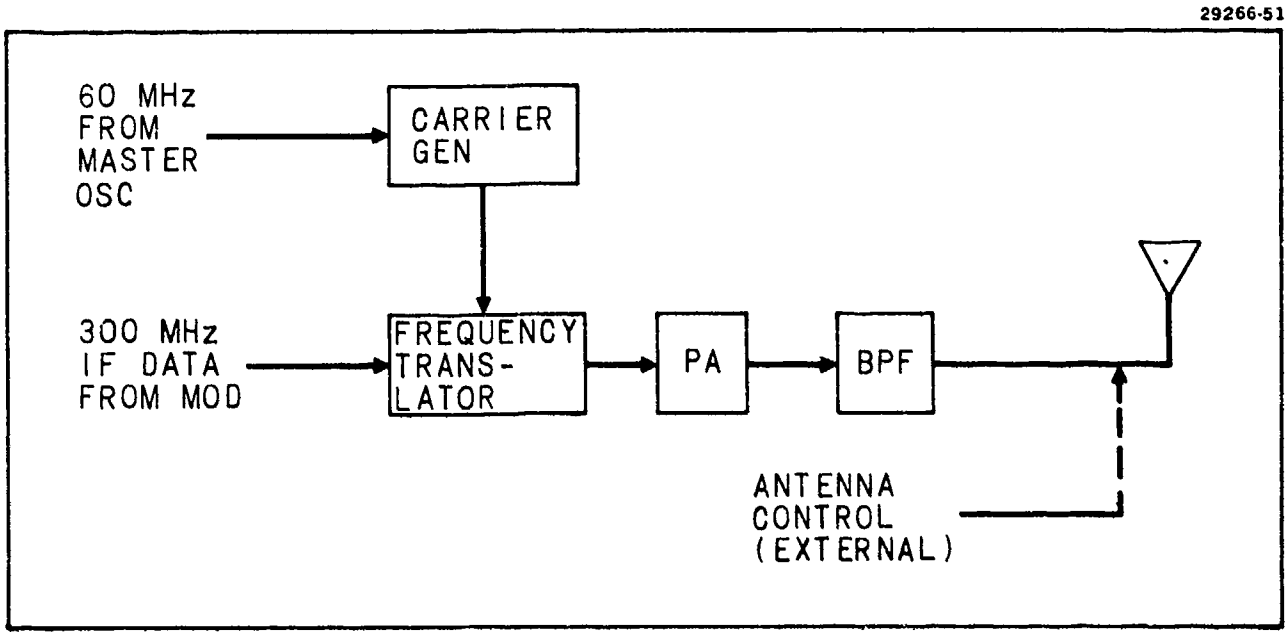

GCS Transmission Assembly. The ground control station radio frequency transmission design characteristics are influenced by the selected 2CPSM spread spectrum modulation technique.

OVERVIEW OF THE RCV DEMODULATOR

Nearly all forward link received signal processing in the RCV Demodulator is performed by digital circuitry. This provides for enhanced reliability of the RCV modem, reduced signal processing implementation losses, and lower modem production cost.

RF Assembly – The RF Assembly should contain a chip matched filter operating at 300 MHz IF for optimum signal-to-noise at the input to the modem's Demodulator Assembly. Additionally, the IF Assembly should contain provision for fast, tight automatic gain control (AGC) with soft limiting to enhance the dynamic range performance and short-burst jamming protection offered by the receiver. It is recommended that provision for one, or more, narrowband notch filters to minimize in-band narrowband interference be included in the design.

2 CPSM Demodulator – Development of pseudo-quadriphase components of the binary continuous phase shift modulated signal is performed by conventional quadrature mixing at IF in the 2 CPSM Demodulator. Two-bit (four level) analog-to-digital conversion at 60 Mpps of these two IF components has been selected for improved signal detection performance. The resultant digital samples of the signals are converted to a pair of biphase signals by a digital commutator. All subsequent RCV Demodulator signal processing is performed by digital techniques.

Carrier Phase Lock Loop – The B component of the commutator output is supplied to a gated Carrier Phase Lock Loop carrier tracking circuit for sampled extraction of a carrier tracking error signal. This loop circuit is designed with narrow loop bandwidth during tracking to minimize jammer influence on signal tracking. Loop bandwidth is automatically broadened upon loss of carrier lock to enhance reacquisition performance.

PN Code Tracking – The PN Code Tracking circuitry employs a delay-lock tracking loop design. The error signal for this loop is also derived from the B output of the 2 CPSM Demodulator during the non-data modulated chip intervals of the gated-carrier signal transmitted by the GCS modem. Employment of the gated-carrier design for signal tracking permits RCV maintenance of received signal tracking at signal to noise ratios below those required for error-free data demodulation. This minimizes the likelihood of receive terminal loss-of-lock during jamming or signal fading which may be of sufficient severity to cause errors in the received forward link command messages.

Data Demodulator – The Data Demodulator mixes the locally generated receive pseudo noise (PN) pattern with the A output of the 2 CPSM Demodulator commutator, and integrates the result over the full data bit interval to provide the forward link spread spectrum processing gain. The Data Demodulator design includes a circuit for monitoring of data integration quality against a preset threshold. This measure of data quality is employed in the modem to 1) control the bandwidth of the Carrier Phase Locked Loop during tracking and reacquisition, 2) reduce vulnerability of modem PN code tracking to jamming, 3) aid in detection of PN code synchronization loss, 4) improve the response of PN code reacquisition, and 5) provide an increased measure of false message acceptance protection without an excessive message error detection coding redundancy. This diverse and extensive use of a data quality measure in the receive section of the modem greatly enhances its performance in a tactical ECM environment. It provides improved communication reliability, signal tracking and reacquisition, and enhanced ECM protection.

Command Decoder – The Command Decoder provides for 1) received message assembly and storage, 2) error detection decoding, 3) forward link message RCV address recognition, 4) false message detection and discard using accumulated data quality and/or detected message bit errors, and 5) message type decoding and routing to supply RCV commands to the RCV avionics and WCCM link commands to the RCV modem and antenna controls. The error detection decoding function of the Command Decoder also provides a message error signal to the PN Clock Control function for aid in detection of loss of PN code synchronization.

PN Clock Control – The PN Clock Control functions primarily to 1) maintain lock between receive and transmit PN generators while tracking the received signal PN code, 2) control the slewing of these two PN generators using Advance/Retard signals from the PN Code Tracking function, 3) detect loss of forward link received PN code synchronization, 4) disable the locking of the Transmit PN Generator to the Receive PN Generator upon loss of forward link code tracking, 5) performs fixed-rate successively-increased-range rapid serial PN code search during reacquisition, and 6) relocking of the Transmit PN Generator to the Receive PN Generator after reacquisition, upon command from the Ground Control Station via a WCCM link command.

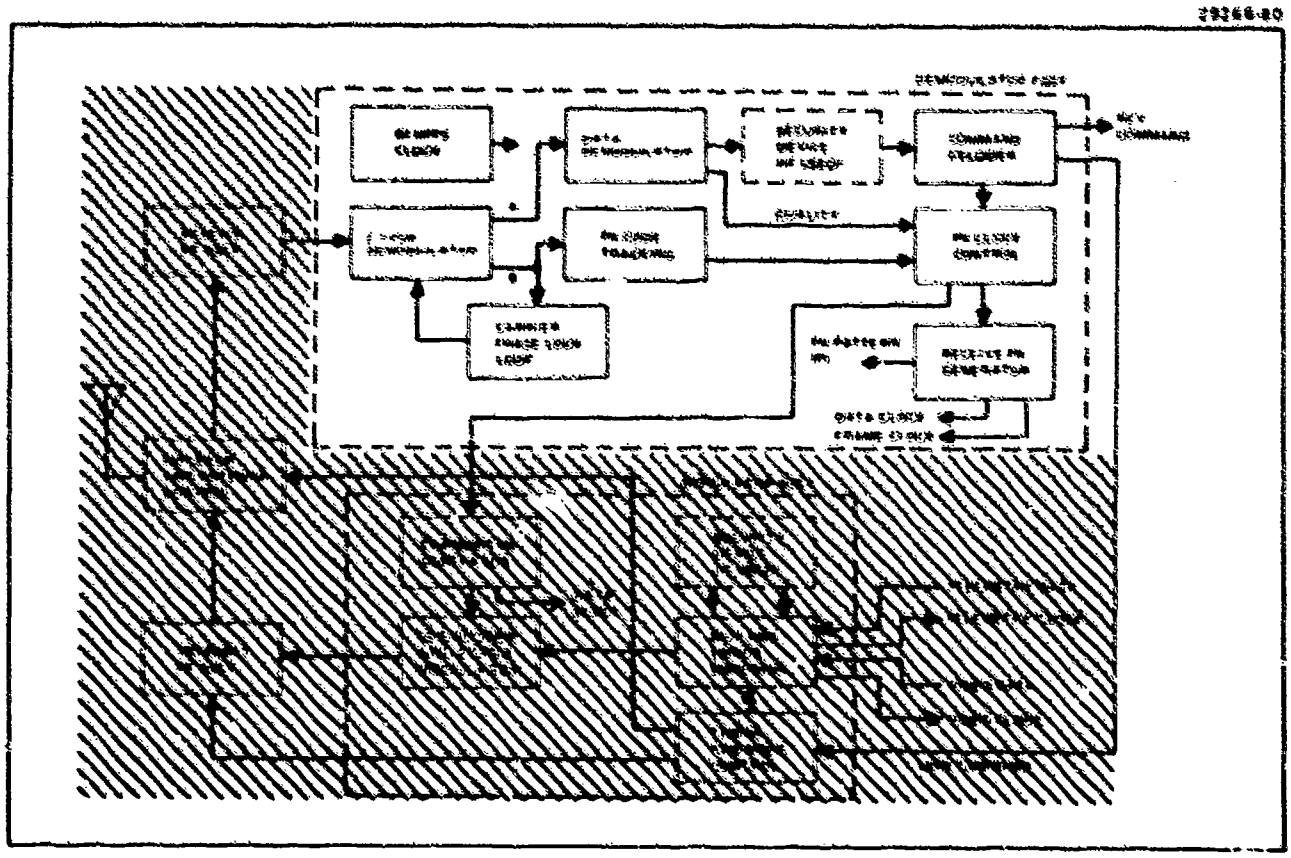

RCV Demodulator Assembly. The extensive use of digital circuitry reduces signal processing implementation losses.

DESCRIPTION OF RECEIVE RF ASSEMBLY

Effectiveness against burst jamming is enhanced by combining fast, tight automatic gain control and soft limiting. Chip match filtering is used for improving output signal to noise ratio.

Received RF from the diplexer is routed through a bandpass filter and translated down to a 300 MHz IF in the Frequency Translator. (Refer to the facing figure.) The 300 MHz IF output of the translator is passed through a Chip Matched Filter to the IF Amplifier. The Chip Match Filter is a passive filter with a time response matched to the pulse shape of a single PN chip. The chip match filter thus improves the signal to noise ratio before IF amplification. The output of the IF Amplifier is applied to the 2 CPSM demodulator circuitry. Provisions are included for the insertion of a notch filter or notch filter bank for the suppression of narrow-band interference. This may be a highly desirable growth capability for the system. A combination of fast automatic gain control (AGC) of the IF amplifier and soft limiting (which takes place in the 2-bit A/D circuitry which follows the Receive RF Assembly) is used to effectively improve short burst jamming protection. In addition the fast and tight AGC minimizes the signal dynamic range input to the 2 CPSM demodulator.

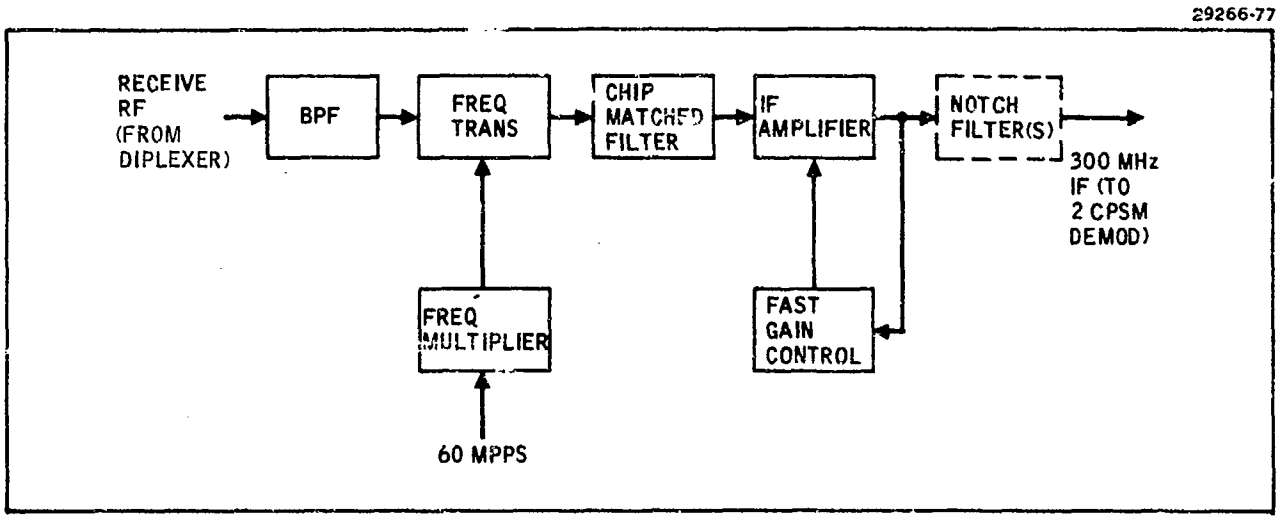

RCV Receive RF Assembly. A chip match filter whose time response matches the pulse shape of a single PN chip is used to maximize S/N ratio in the Receive RF Assembly.

DESCRIPTION OF 2 CPSM DEMODULATOR

Digital biphase sampling components derived from the pseudo-quadriphase IF signal by the 2 CPSM Demodulator allow for subsequent digital signal processing. Digital — in lieu of analog — signal processing results in improved modem performance.

The 2 CPSM Demodulator functions to translate the received pseudo-quadriphase analog IF signal to a pair of digital biphase sampled signal components which contain the necessary information for subsequent PN code tracking, carrier tracking, and data demodulation. The analog-to-digital conversion process allows subsequent signal processing to be performed digitally, a procedure which results in 1) elimination of requirements for circuit alignment, 2) improved modem reliability and maintainability, and 3) decreased production and system support costs.

As shown in the 2 CPSM Demodulator block diagram (Figure A, opposite), the 300-MHz IF output from the Receive RF Assembly is mixed with in-phase and quadrature phase 300-MHz signals developed by the carrier phase lock loop. The mixer outputs are then filtered before being applied to the 2-bit A/D converter. Figure B, Part A illustrates conceptually the type of signal appearing at the low pass filter outputs. For convenience, only the I-channel waveform is shown. The waveform is 4 chip intervals in duration and can be either positive or negative (with a 50 percent probability), depending on the instantaneous data and PN coding used at the modulator. The shape of the filtered pulse is the autocorrelation function of the transmitted half-cosine-shaped pulse. The pulse shape is purposely contributed by the chip match filter (which precedes the 2 CPSM demodulator) to maximize the signal-to-noise ratio at the center of the pulse. If chip match filtering were not used, the low pass filter output waveform would be 2 chip intervals in duration (corresponding to the same time duration of the transmitted waveform) and appear as illustrated in Figure B, Part B.

Figure B, Part C, illustrates possible I-channel, low-pass filter outputs during an 8-chip time interval. It can be shown mathematically that if the peak output is scaled to a level of 1, the crossover points between succeeding pulses will occur at an amplitude level of $1/\pi$. The dashed lines represent the possible 180-degree phase shifts of each pulse pattern.

Figure B, Part D, represents the I-channel, low pass filter output during an 8-chip time interval where it is assumed that the center pulse is posidive. If the center pulse is always positive, carrier phase as well as PN code tracking information can be derived from the 8-chip time interval pattern, as explained next.

Let it be assumed for the moment that phase tracking has been obtained. If sampling is performed during the times indicated in Figure B, Part D, sample S1 will yield a level which is algebraicially equal to the $+1/\pi$ level from the centered pulse and a $\pm 1/\pi$ level from the early pattern (depending on the sign of the early pulse). Similarly the S3 sample will yield a $1/\pi \pm 1/\pi$ sample level. As mentioned earlier, the pulses have a 50 percent probability of being plus or minus. As a result, over many sampling intervals, the B and $\bar{B}$ signals will both yield a $1/\pi$ average sample level. Subtracting these two sample levels will then yield a 0 composite average sample. It is this composite average sample level which is used for the PN code tracking loop.

If the sampling times are skewed as shown in Figure B, Part E, the composite average sample level from the S5 sample will be slightly more

29266-25

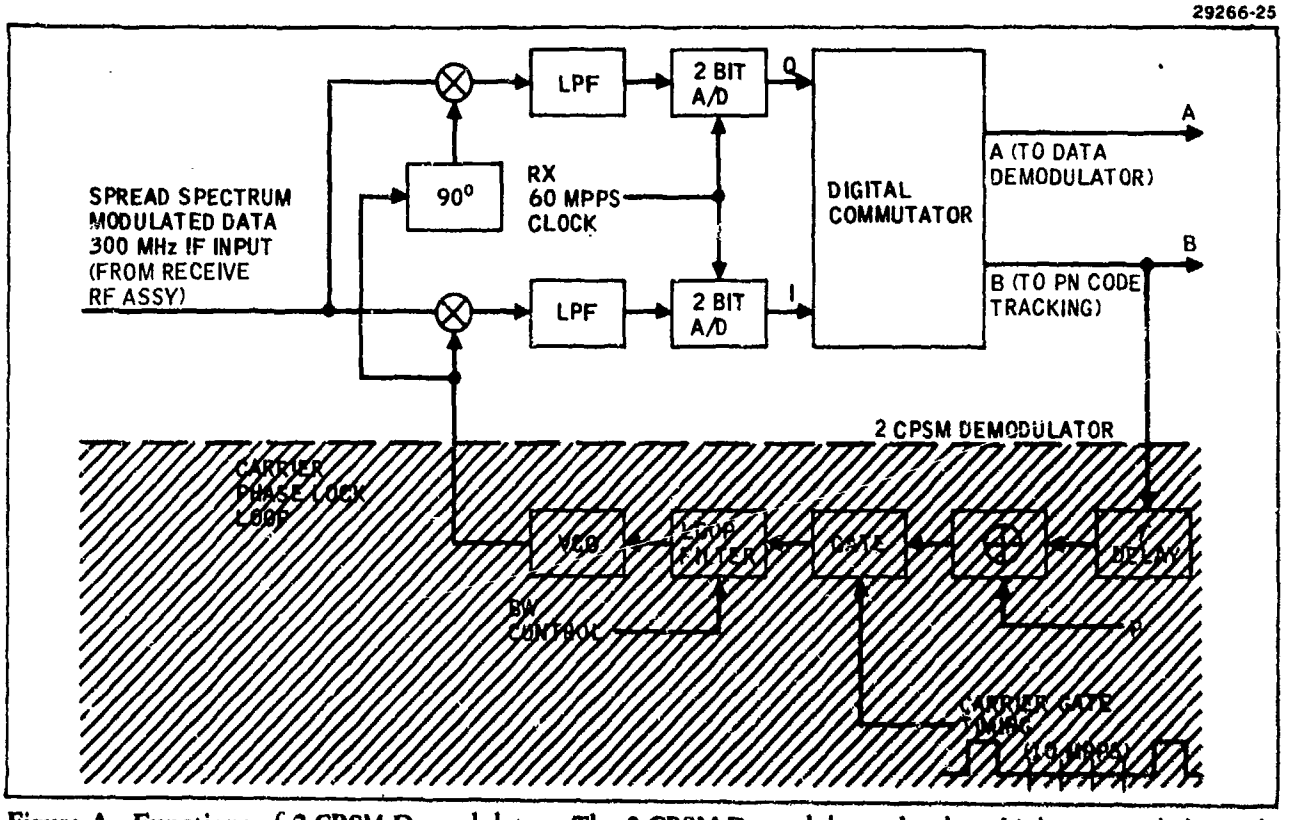

Figure A. Functions of 2 CPSM Demodulator. The 2 CPSM Demodulator develops biphase sampled signal components which can be used concurrently for carrier tracking, PN code tracking, and data demodulation.

29266-26

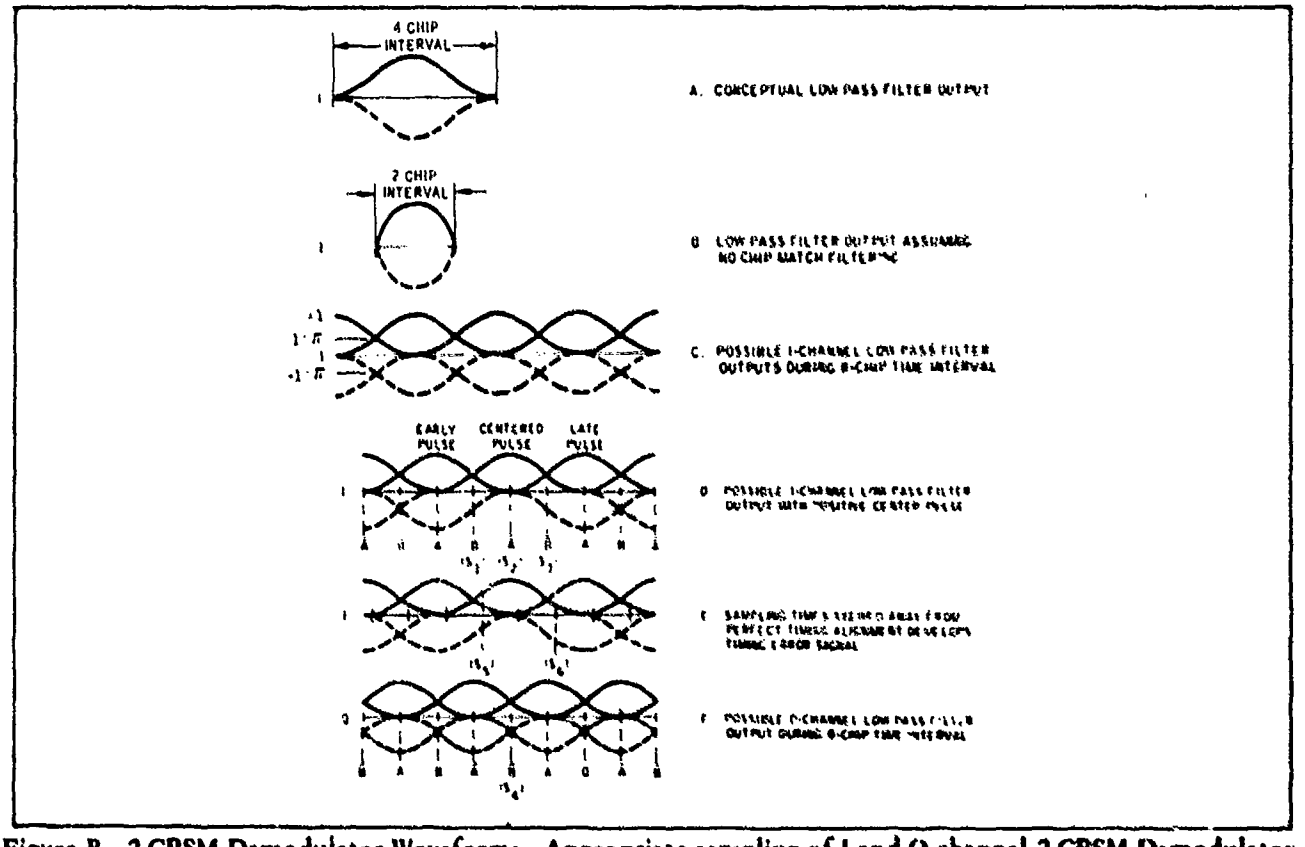

Figure B. 2 CPSM Demodulator Waveforms. Appropriate sampling of I and Q channel 2 CPSM Demodulator low pass filter outputs generate required information for use in subsequent digital signal processing.

BLANK PAGE FOLLOWS 4-15/4-16

than $1/\pi$. This is due to the fact that the average sample value from the early pulse is zero, while the average sample value from the centered pulse (assuming it remains positive) is slightly more than $1/\pi$. Similarly, the composite average sample level from the S6 sample will be slightly less than $1/\pi$. Substracting these two values then results in a net error signal for PN timing correction. If the sampling times are skewed to the left, it can be seen that an average composite error signal will be developed, which will be opposite in sign to the error signal developed when sampling times are skewed to the right.

Up to this point, all discussion has been related to the low pass filter, I-channel output. Sampling of the Q-channel output is performed in the same manner. Figure B, Part F, illustrates the Q-channel signal with appropriate timing for correct phase and timing alignment. Because of the quadrature relationship between the I- and Q-channels the A, $\overline{A}$, B, and $\overline{B}$ sample peaks and nulls appear at twice the rate as for a single I-channel. The digital commutator circuit functions to take the 2-bit digital samples of the A, $\overline{A}$, B, and $\overline{B}$ levels from the A/D converters and shuffle them so that the B and $\overline{B}$ signals from both the I and Q channels are routed to the B output, while the A and $\overline{A}$ samples are routed to the A output. The A output of the digital commutator is used exclusively by the data demodulator circuit.

Sample times S1 through S4 (Figure B, Parts D and F) represent the sampling which will occur during perfect carrier phase and PN timing. As explained previously, the S1 and S3 samples are compared, and the results of the comparison are used for developing time tracking signals. The S2 sample is used for data demodulation. The S4 sample, as can be seen in Figure B, Part F, will have a composite average level of zero. It can be shown that a deviation from phase lock will result in a bias in the S4 sample. The sense of the bias is such that it can be used for driving the phase lock loop back to its phase lock condition. Part F also shows that if S4 is skewed in either direction because of a timing error, a zero phase error signal still results. Therefore, the timing and phase error tracking loops operate independently. Because of the commutator action, the roles of the I and Q channels will change on the next chip interval.

An assumption has been made during this discussion that the centered pulse has remained positive. This is achieved within the modem by activating the carrier phase lock and PN code tracking loops only during a gated carrier interval. In both loops, the gated carrier pattern is correlated, and the associated PN code is stripped from it; resulting in the required positive centered pulse.

DESCRIPTION OF CARRIER TRACKING LOOP

By allowing carrier tracking loop activation only during gated carrier intervals, carrier tracking will remain independent of data modulation. This results in reduced modem design complexity and improved signal tracking at low S/N ratios.

Employment of gated carrier signal structure for WCCM enables carrier tracking to be performed independently of the message data bit interval. This facilitates optimization of the carrier tracking loop circuit design for the dynamics of the communications link between the transmit and receive terminals. Optimization of the tracking loop circuit design results in improved signal tracking at low signal to noise ratios where modem performance is most vulnerable.

The B output of the digital commutator within the 2 CPSM demodulator is used to develop the carrier tracking error signal. An explanation of what the B signal consists of and conceptually how it is processed to develop the carrier tracking error signal is included in the 2 CPSM demodulator discussion. The remainder of this topic discusses the implementation of the carrier phase lock loop as depicted in the facing figure.

The non-delayed B signal is considered by the modem to be coincident with an early version of the received signal. The B signal is delayed one chip interval (τ) resulting in a B signal coincident with the centered version of the received signal. The output of the one chip delay circuit is mixed with the PN pattern effectively stripping off the PN pattern from the B signal. The mixer output is then gated through a variable bandwidth loop filter to the VCO. By activating the carrier phase lock loop only during a gated carrier interval, the loop filter output will have a time average level of zero under perfect phase locked conditions, and a positive or negative bias corresponding to the sense of any relative phase errors. The loop filter bandwidth control functions to increase the carrier phase lock loop bandwidth for faster reacquisition and to narrow the loop bandwidth during normal tracking for improved signal to noise performance.

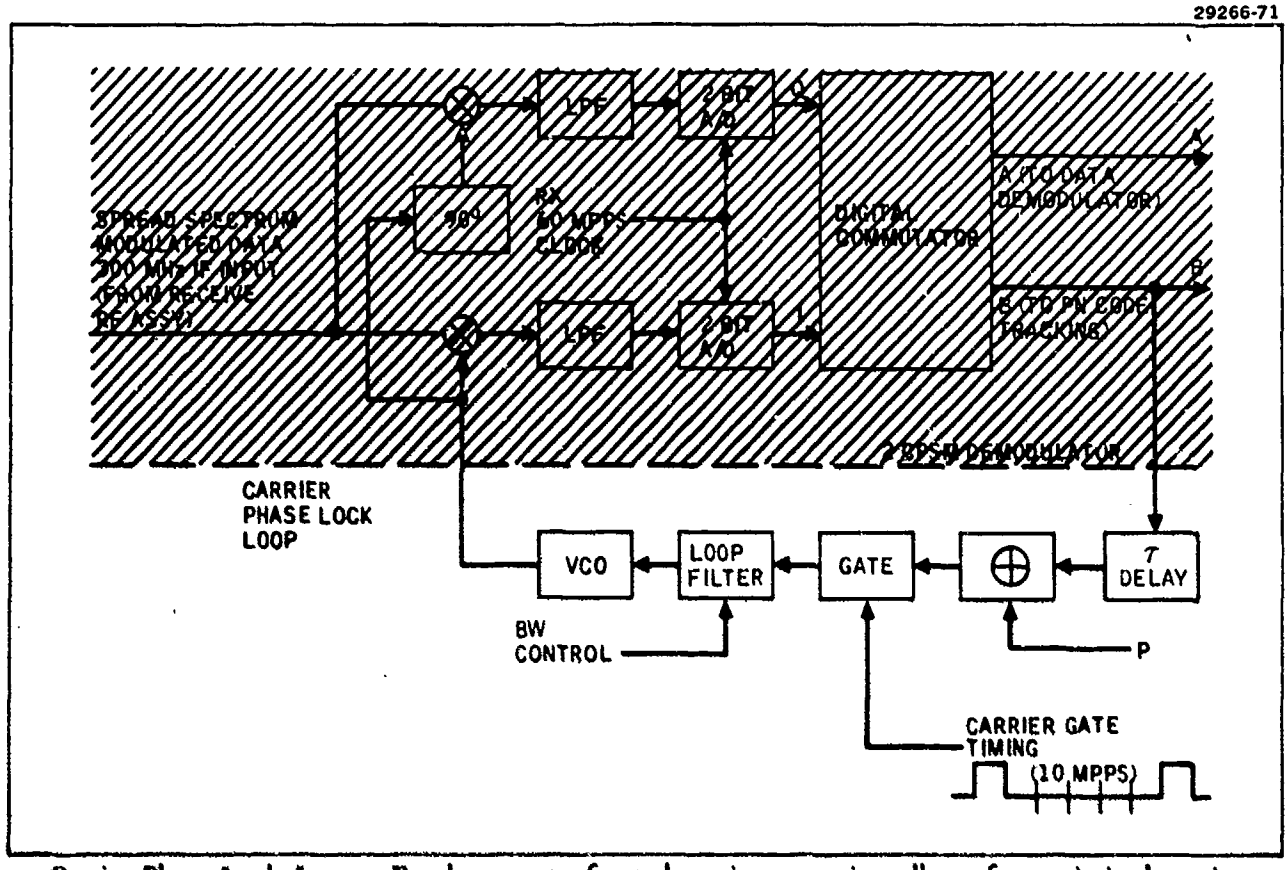

Carrier Phase Lock Loop. Employement of gated carrier operation allows for optimized carrier tracking loop design for improved modem performance at low S/N.

PSEUDO NOISE CODE TRACKING

Tracking of the received signal pseudo noise code sequence is performed by a digital delay lock loop which is optimized for the dynamics of the communications link. Use of the gated carrier signal structure allows integration over a large number of data intervals, thereby providing more processing gain. The added processing gain permits RCV maintenance of received signal tracking at signal-to-noise ratios below those required for error-free data demodulation.

The Pseudo Noise (PN) Code Tracking function of the modem derives control signals which cause the modem's Receive PN Code Generator to track the spectrum-spreading PN code imbedded in the received signal. A digital delay lock loop circuit is employed for the PN code tracking error signal development. Error signal sampling for digital integration is performed only during every sixth chip interval where the signal is unmodulated by the data. Thus, the code tracking loop design is independent of the data rate employed on the link. This independence simplifies loop design, particularly in a system such as this where a modular set of different data rates are employed for maximum achievable processing gain with a given RCV deployment level.

More importantly, the loop response is optimized for the link signal dynamics. Hence, integration of sampled code tracking error signals is carried out over relatively long (1/2400-second) intervals, rather than at the shorter instantaneous link data bit intervals. As shown in the subsequent discussion of the PN Clock Control function, the maximum code timing advance/retard correction made in each 1/2400-sec integration interval is 1/8 of the 16.7 ns code chip interval and corresponds to a maximum code timing correction rate of approximately 5,000 nanoseconds/sec. Thus, an RCV velocity of up to 5,000 ft/sec, maximum can be tracked. This velocity is well above those which will be realized. However, limiting the correction rate to this value will result in effective discouragement of intelligent jammer attempts to use a high slew rate jamming signal to pull the demodulator out of code synchronism with the received forward-link signal.

As a further advantage, employment of the long integration interval for PN code tracking permits effective RCV modem code tracking at signal-to-noise ratios below those necessary for error-free data demodulation. Thus, even during signal fading or jamming conditions which may be severe enough to cause errors in received command messages, receive terminal loss of PN code lock is less likely.

The B output of the digital commutator within the 2 CPSM demodulator is used to develop the PN code tracking error signal. An explanation of what the B signal consists of and, conceptually, of how it is processed to develop the carrier tracking error signal is included in the preceding 2 CPSM Demodulator discussion. The rest of this topic discusses the block diagram level implementation (see figure opposite) in terms of the concepts already cited.

The B signal from the 2 CPSM demodulator is delayed twice (1 chip interval each) to develop early, centered, and late versions of the received signals. The early and late received signals are summed and mixed with the PN pattern before being applied to the up-down counter. The mixer circuitry effectively strips off the PN pattern from the received B signal. The up-down counter is activated only during a gated carrier interval (every sixth ship) and employs the illustrated gating waveform. The contents of the up-down counter then represents a time integration of the difference between early and late B patterns (with the PN pattern removed) which have occurred only during

gated carrier intervals. This integration process results in a composite average error signal which is used for the necessary PN timing correction. The contents of the up-down counter are dumped at a 2400-pps rate, at which time the threshold circuitry determines if the accumulated counter contents represent a PN code tracking error signal for advancing or retarding the PN timing. The resultant advance-retard signals are routed to the PN clock control circuitry for the actual PN timing corrections. The 2400-pps timing represents a PN code tracking update rate which is fast enough for maximum Doppler tracking and slow enough to reduce vulnerability to both deception and brute force jamming. The 2400-pps timing is slow enough so that correct timing generation for effective spoofing would take a jammer a minimum of approximately 2 hours to effectively conduct a PN timing search.

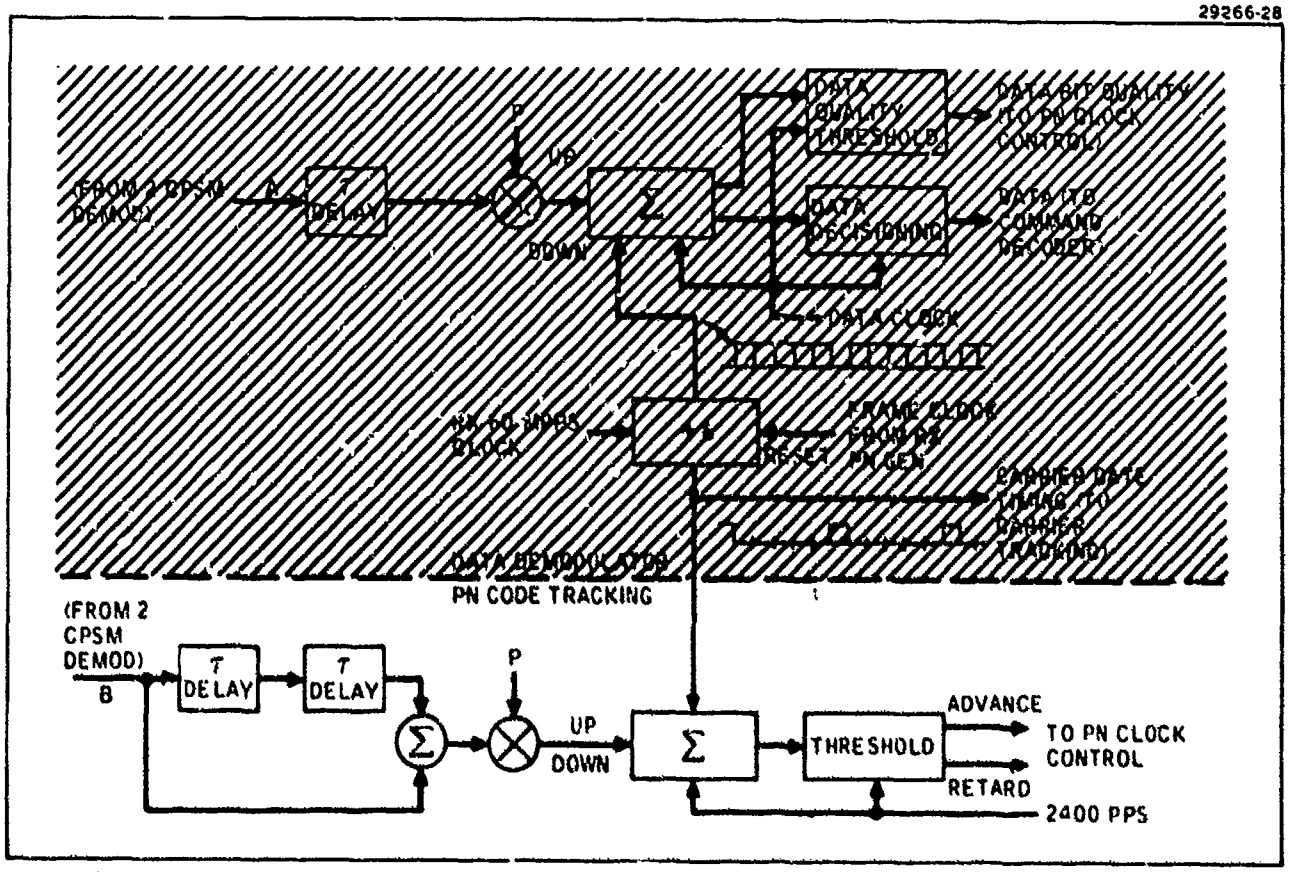

PN Code Tracking Function. The pseudo noise code tracking loop, long-term integration process results in additional processing gain for improved signal tracking during low s/n conditions and provides additional anti-jamming protection.

DESCRIPTION OF THE DIGITAL DATA DEMODULATOR

Digital processing is used to extract RCV command data from the pseudo noise coded input. Data quality measurements, performed by the Data Demodulator integrator circuitry, are used in subsequent modem receive circuits to improve communications reliability, signal tracking and reacquisition, and enhance ECM portection.

The Data Demodulator provides the necessary digital processing to extract RCV and link command data from the sampled pseudo noise (PN) coded output of the 2 CPSM Demodulator. The digital processing technique readily adapts to changes in forward link data rates. By digitally integrating the individual chip interval decisions over a full data bit interval, the spread spectrum processing gain is realized. Both sign and amplitude components of each processed chip are determined. The integrated sign component is used for data bit decisioning. The integrated amplitude component provides a measure of the Data Demodulator output signal to noise ratio quality. The data quality measurement is used in subsequent receive sections of the modem for improved code tracking and signal acquisition.

The A output of the digital commutator within the 2 CPSM demodulator is used by the Data Demodulator for data bit decisioning and for developing data quality indications. Refer to the facing figure. The A input to the Data Demodulator circuit is delayed one chip interval (τ) and then mixed with the centered PN pattern. The τ-delay allows the A input which is coincident with the early version of the received signal to correlate with the centered PN pattern in the mixer circuit. The mixer circuitry essentially strips off the PN pattern leaving only the original data and gated carrier chips. The resultant signal is then applied to an up-down counter which integrates the data chip inputs over a data interval before dumping the resultant output into the data decisioning circuit. The up-down counter (integrator) is deactivated during a gated carrier interval (every 6th chip) so that only demodulated data effects the integrator contents. The sign of the Integrator output is used for data decisioning at the end of each bit interval. The magnitude of the Integrator output is used to determine if data quality is acceptable for modem operation. The data quality indications are used in the PN Clock Control circuitry for valid message determination and PN search control functions.

29266-76

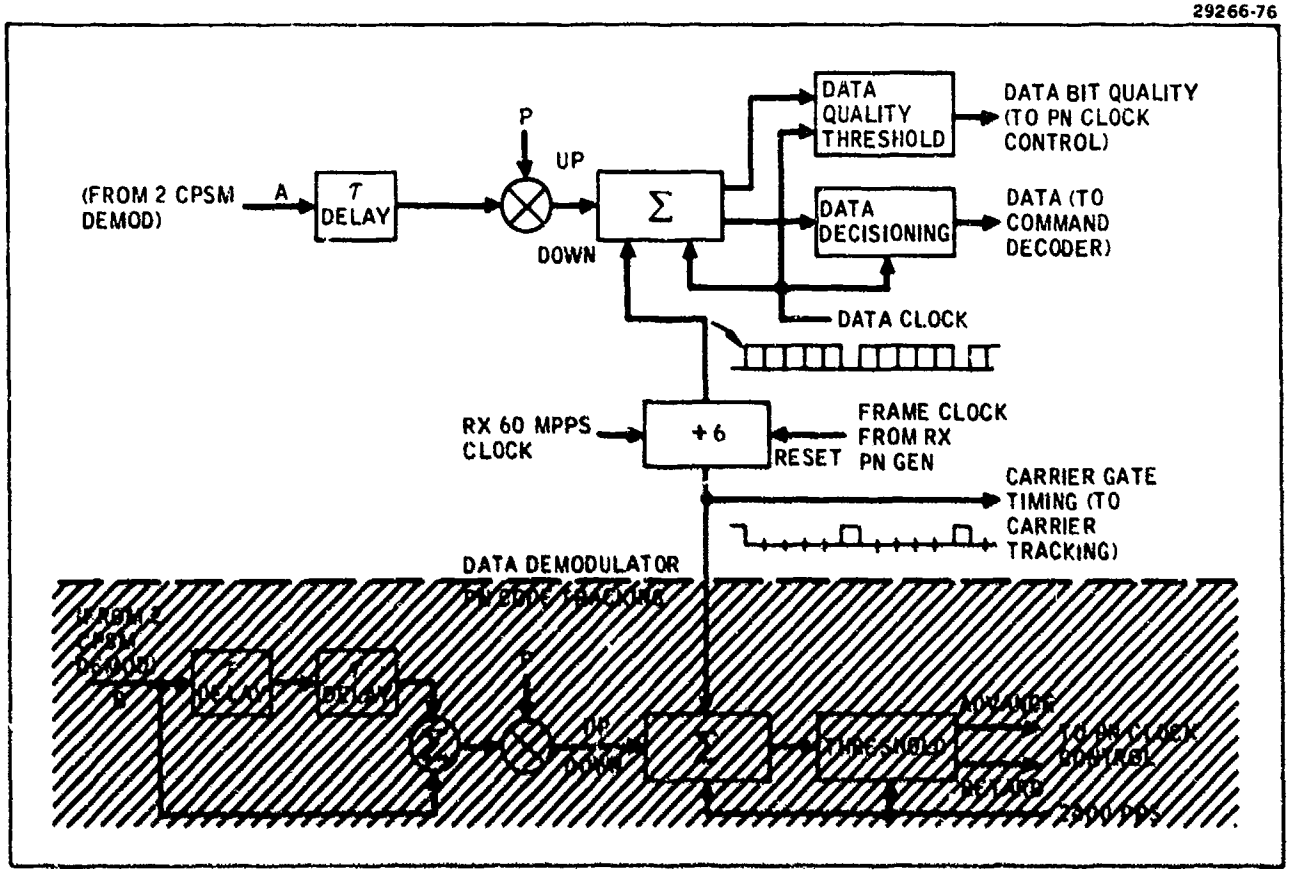

Digital Data Demodulation Technique. This technique readily adapts to all modular changes in forward link data rates; and by digitally integrating over a full data bit interval, achieves the desired forward link spread spectrum processing gain.

PSEUDO NOISE CLOCK CONTROL FUNCTION

The Pseudo Noise Clock Control circuitry functions to control pseudo noise generator timing to within a 1/8-chip interval. In addition, circuitry is included to initiate a pseudo noise search upon recognition of several frames of invalid messages. During a PN search mode, the pseudo noise clock control circuitry responds with fast deactivation of the search concurrent with high data signal to noise ratio quality, which may represent proper phasing.

The pseudo noise (PN) clock control circuitry uses the advance/retard signals developed in the PN code tracking loop to digitally control the receive and transmit PN generator timing to within 1/8-chip interval. During acquisition or reacquisition phases, simple digital logic is used for slewing the receive PN generator timing for developing various search patterns. Data signal-to-noise (S/N) quality measurements and parity error indications are combined and used as criteria for initiating and terminating a search mode. The PN clock control circuitry controls locking and unlocking of the receive and transmit PN generators. This controlled PN generator locking feature negates effective jamming recognition by intelligent jammers because of recognition of RCV transmit PN generator slewing coincident with the effective jamming.

The 60 Mpps Master Clock output (see figure opposite) is applied to a tapped delay line which provides eight 60 Mpps outputs, each separated by approximately 1/8 of a PN chip. The Phase Memory and Tap Selector circuitry function to select one of the eight taps for use as the transmit and receive 60-Mpps clocks. Each phase memory circuit (transmit and receive) functions to convert the Slew Control output commands to 3-bit logic in order to control the Tap Selector circuitry. The Slew Control Circuitry, under normal tracking conditions, receives the advance and retard pulses from the PN Code Tracking Loop to simultaneously advance or retard the transmit and receive clock timing.

The Sync Detector Logic circuitry functions to detect a sync loss condition. A sync loss condition will exist any time poor message quality or parity error (as determined by the error-detection circuitry within the Command Decoder) exists for several frames (six frames for example). Data bit quality indications from the Data Demodulator circuitry are used as an input to the Message Quality Accumulator. The accumulator functions to count the number of poor quality bits in a message. If the number of poor quality bits in a message exceed a fixed number (eight for example), a poor message quality indication is routed to the Sync Detector Logic. Upon detection of a sync loss condition by the sync detector logic, a signal is generated to initiate a PN search mode for reacquisition. Simultaneously, a reset signal is sent to the Transmitter Lock circuitry to unlock the Transmit and Receive Phase Memory Circuits. The PN Search Control logic generates five PN search modes (discussed in detail in the following topic). The PN search modes continue until reacquisition is obtained. Reacquisition is confirmed by the simultaneous occurrence of good message quality and proper parity. When reacquisition is obtained, the Transmit and Receive Phase Memories will remain unlocked until an uplink command is received by the RCV, commanding relocking of the transmit and receive timing. The purpose for this is to assure that effective jamming is not recognized by a jammer because of slewing of the RCV transmit timing coincident with the application or removal of effective jamming.

The Data Quality Accumulator circuitry functions to control the Carrier Phase Lock Loop bandwidth during both the normal tracking and search modes. In addition, it is used to temporarily disable the PN slew during a search mode

any time the Data Quality Accumulator content is more than zero (0). The accumulator consists of an up-down counter with a zero lower level and some fixed upper level (15 for example). A low data quality indication forces the accumulator to count down; a high data quality indication forces the accumulator to count up. At any time when the Data Quality Accumulator content is zero, the PN search mode (if activated at that time) will be enabled. Whenever the Data Quality Accumulator content is anything other than zero, the PN search mode (if activated at that time) will be disabled. In this manner, the reacquisition circuitry will react very quickly (one-bit interval) to high data quality inputs, which may represent proper phasing. Alternately, the system will include a built-in delay (up to 15 bit intervals) to nullify any random cases of poor quality due to short-term fading or spurious random noise.

The Data Quality Accumulator circuitry controls the Carrier Phase Lock Loop bandwidth so that an increased loop bandwidth results any time a low data quality condition (Data Quality Accumulator content equals zero) exists. In this manner, higher S/Ns will exist during normal tracking (because of a narrow loop bandwidth), while a wider loop bandwidth will allow for faster reacquisition times during low data quality conditions. During the normal tracking mode, the PN Code Tracking Loop maximum correction rate will be approximately 5000 ft/s, well above maximum RCV velocity capability.

The manual search initiate signal, which is shown as an input to the PN Search Control block, is used for initial acquisition purposes. The manual search initiate mode is discussed in detail in the following topic.

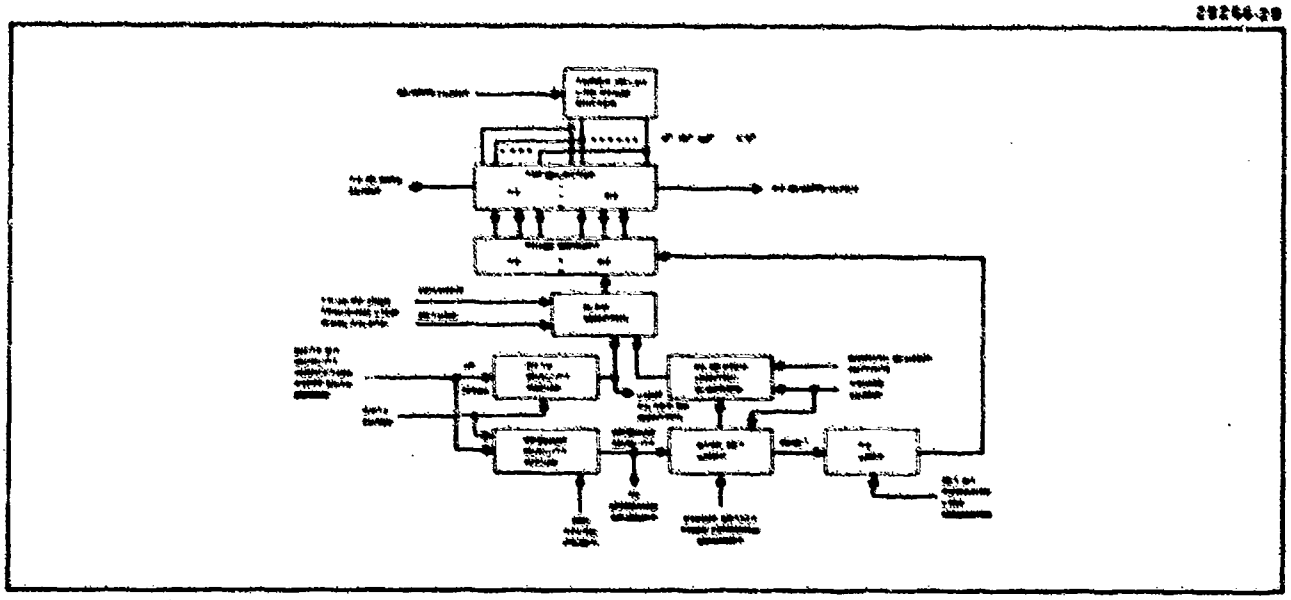

Controlled Slewing of Receiver PN Generator During Acquisition and Reacquisition by Simple Digital Logic. Acquisition and reacquisition modes are initiated and terminated, with data quality, message quality, and parity error criteria as a basis.

RCV SIGNAL ACQUISITION AND REACQUISITION TECHNIQUE

Limited search modes activated concurrently with synchronization loss recognition allows for reactivation time which matches synchronization uncertainty.

The RCV modem reacquisition technique consists of five modes for PN pattern timing search control (see figure opposite). The first mode consists of a fixed constant level output which is used during a normal tracking mode in which slewing of the receive PN pattern generator is not required. If a sync loss is detected, the system goes into a narrow-range search (mode 2) which covers a search range of ±1 mile. Assuming that a search time of 5 seconds has elapsed since sync loss, the system will go into its third mode. Mode 3 consists of a medium-range search which generates PN slewing to effectively cover a ±4-mile search range. The medium-range search mode continues (assuming nonreaquisition) until 25 seconds have elapsed since sync loss. At this time a wide range search (mode 4) is activated which effectively covers a ±16-mile search range. If reacquisition is not obtained within 105 seconds from initial sync loss, a full PN pattern search will be generated until reacquisition is obtained. The full PN pattern search actually represents a critical condition in this, that if the fifth mode is reached during normal RCV deployment, the probability of RCV survivability is assumed to be in question because of the long period without control inputs. For this reason, the full PN pattern search will be performed at a higher speed with slightly reduced processing gain for faster reacquisition. During mode 5, effective processing gain on the order of 27 dB will exist as contrasted with a minimum of 30 dB used for modes 1 through 4. Effective mean time to acquire during mode 5 will be less than 20 seconds.

The total PN pattern search (mode 5) is also used for initial acquisition prior to RCV deployment. In this manner both the RCV and GCS can be quickly synchronized and checked out (if desired) prior to mission deployment.

29266-36

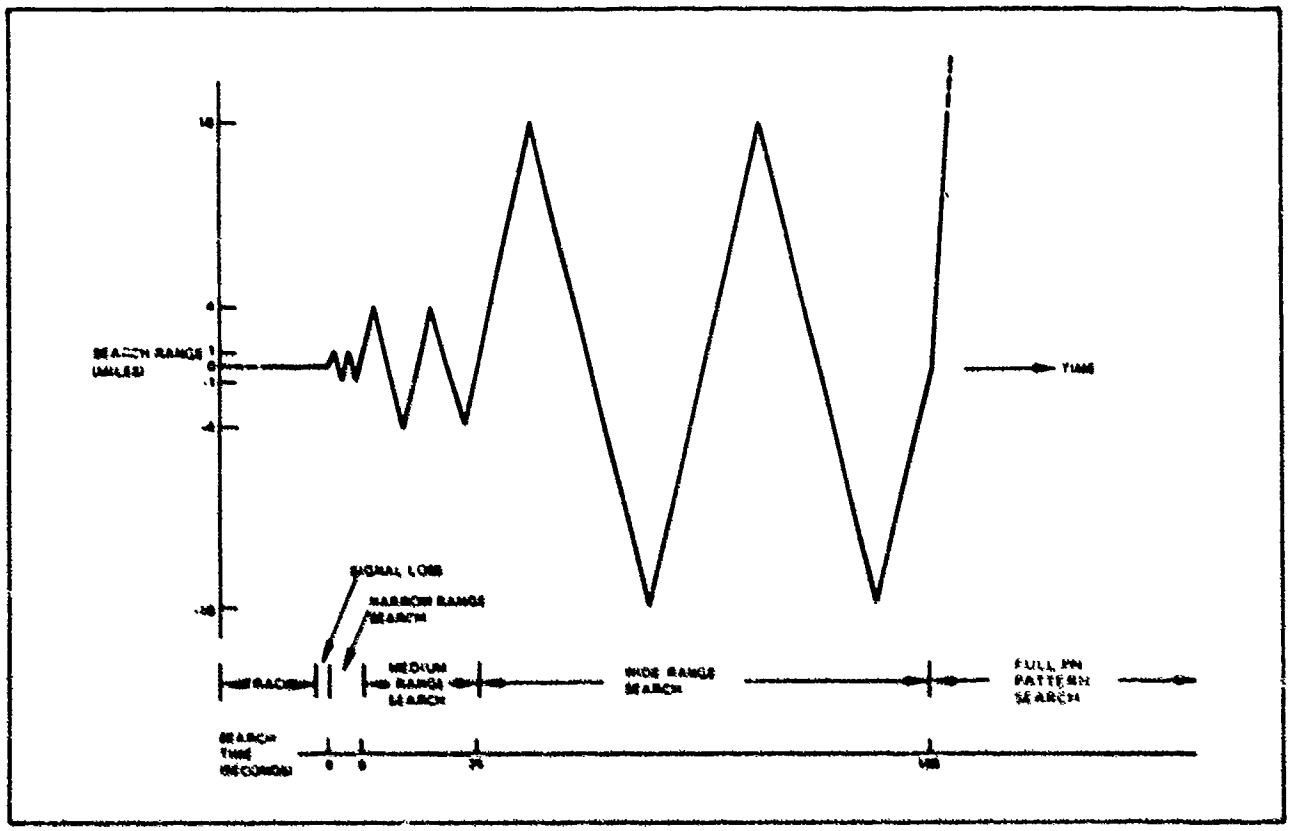

RCV Modem Reacquisition Technique. Constant-rate, expanding range search modes match synchronization uncertainty.

DESCRIPTION OF COMMAND DECODER LOGIC

Combining message quality measurements with parity error detection and address recognition for valid message determination provides an increased measure of false message acceptance protection without excessive message detection coding redundancy.

A very low probability of false command messages by the RCV modem is accomplished by basing the criteria for valid message recognition on the simultaneous occurrence of no detected parity errors, adequate S/N message quality, and RCV address recognition. These three events result in a probability of false message acceptance of less than 10^{-8}.

It should be noted that most commands from the GCS will be directed to the RCV avionics. A relatively small amount of link commands will be generated by the GCS since link commands are required only to change modem status.

As shown in the facing diagram, data from the Data Demodulator is routed through the Security Device to the Message Storage and Error Detector Decoder circuits. The Security Device represents a growth capability for the modem in that planning for security device incorporation is included. Message timing applied to the Address Recognition circuitry is used to initiate a comparison between the RCV address stored in the Address Recognition circuitry and the address portion of the message stored in the Message Storage circuitry. The Error Detector Decoder is used to check for parity bit error. The Address Recognition and Error Detector Decoder circuit outputs, along with a message quality indication (from the Message Quality Accumulator within the PN clock control circuitry), are used to determine if a valid message has been received. Assuming the simultaneous occurrence of address recognition, correct message parity and high message quality, a valid command signal will be generated. The uplink message format includes one bit of information for differentiating between RCV and link commands. This information is sent to the Valid Command Message circuitry which--assuming a valid message has been detected--will route the stored message to the RCV or modulator portion of the modem as required. Parity error information is also sent to the PN clock control circuitry for use in the Sync Detector Logic circuitry.

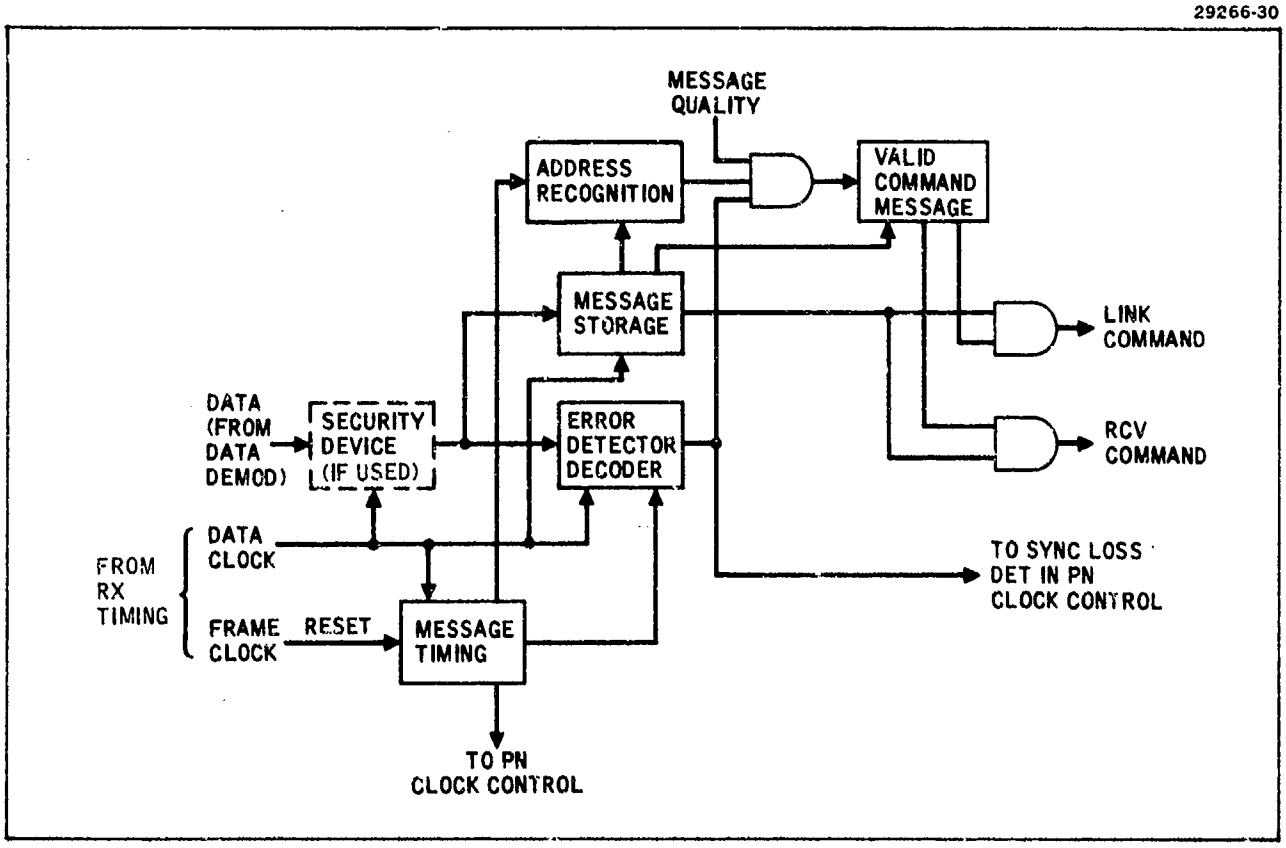

The Command Decoder. The Command Decoder logic ensures a very low probability of false command message acceptance.

OVERVIEW OF THE RCV MODULATOR

The modulator section of the RCV modem generates two forms of the 300-MHz IF, constant-amplitude, 60-Mpps keying rate, return-link 2 CPSM signal. Periodic short bursts of the signal containing RCV telemetry data are generated for transmission on the multi-user TDMA channel; while a time-continuous signal, which fully occupies a return link channel, is generated in the Video and Telemetry or in the Continuous Telemetry mode.

The RCV modulator is comprised of four functional elements. (See figure opposite.) Two elements, the PN Generator and 2 CPSM Demodulator, are identical with the comparable functions in the GCS Modulator. The third, the Multiplexer and Error Encoder function must accommodate periodic telemetry message data only in the TDMA mode, interleaved continuous 20 Mbbs video and low data rate telemetry data in the V&T mode, or continuous telemetry data only in the CT Mode. The fourth element, the Timing and Mode Control Unit, processes Link Commands to control the operation of the Modulator during each of these three return link transmission modes.

Timing and Mode Control – For most effective and reliable ECCM communication of return link video, as well as for forward-link commands and return-link status-response data (telemetry), it is anticipated that a steerable directional antenna will be employed in the RCV. Thus, provision for remote antenna control from the GCS is included in the system concept and accommodated by the modem design inclusion of link command capability.

In the Timing and Mode Control function of the Transmit Section of the RCV modem, the RCVs transmitted message format and transmission mode are controlled. A link Command Register containing WCCM link commands received by the RCV over the forward link provides the basis for generation of the timing and mode control signals. These commands, received from the Ground Control Station, determine which of the return link modes of operation (described in the previous subsection) and RF channels are used by the RCV for downlink transmission. Additionally, in the TDMA burst transmission mode, transmit timing control information received from the GCS for return-link guard time management determines which of one thousand 16.7 μs intervals within the downlink half-frame will be used for initiation of the burst. This feature permits very effective – yet simple – management of multiple RCV burst transmissions to account for dynamic variation of RCV-to-multiple ground station ranges.

PN Generators – Two PN code generators are employed in the RCV modem: one for transmit and one for receive. The two generators are identical in design and are locked in synchronism during normal operation of the modem. Both PN Code Generators are comprised of three non-maximal length sequence generators, each of which produces a slightly nonlinear sequence. The outputs of the three sequence generators are combined to produce a 60-Mpps compound, highly nonlinear PN sequence which is non-repeating within a WCCM transmission frame interval. Thus, the sequence length is greater than 2 million bits. The individual sequence lengths are chosen to provide convenient generation of timing pulses for control of modem functions. By development of transmission frame, message, and data bit timing signals from the PN sequence generators, receive modems automatically develop these timing pulses upon acquisition of PN code synchronization. This action simplifies modem receive signal synchronization circuitry.

Multiplexer and Error Encoder – The Multiplexing and Error Encoding function performs the necessary baseband functions which precede spread-spectrum modulation for return-link transmission. In the TDMA mode, RCV

status/response data is multiplexed with modem status data, and error control redundancy is generated and inserted into the message. Subsequently, gated carrier intervals are interleaved with this data at the 60-Mpps PN code chip rate.

2 CPSM Modulator – This interleaved stream is mixed with the 60-Mpps spectrum-spreading PN pattern from the Transmit PN Generator in the SS Encoder and 2 CPSM Modulator. Binary Continuous Phase Shift Modulation (2 CPSM) of this encoded chip stream is performed to generate a pseudoquadriphase, constant-amplitude, 60 Mpps keying rate signal at a 300-MHz IF.

29266-78

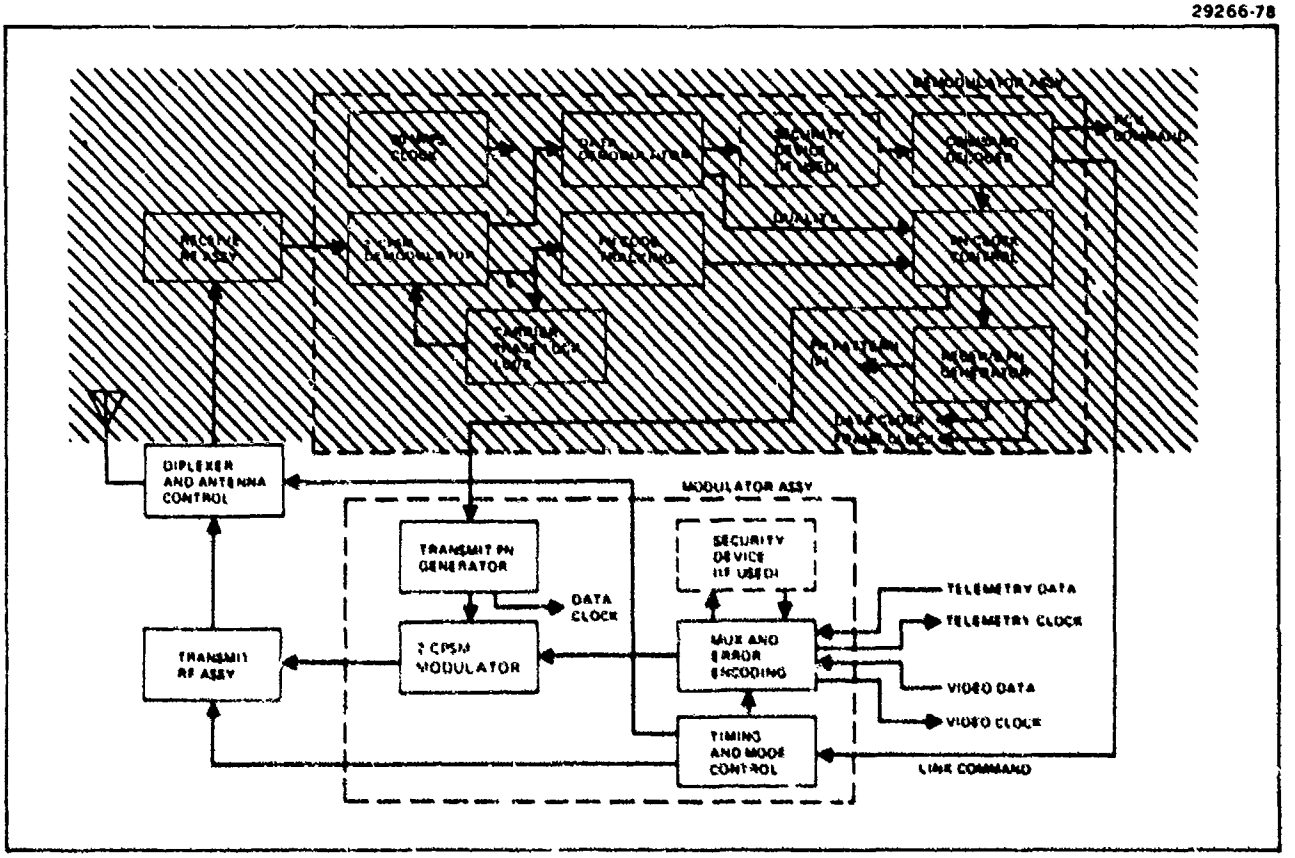

The Modulation Assembly. The four functional elements are the Transmit PN Generator, 2 CPSM Modulator, Multiplexer/Error Encoder, and the Timing/Mode Control.

MULTIPLEXER AND ERROR ENCODER

Positive acknowledgment of modem status to the GCS increases effective processing gain of the system.

The primary function of the Multiplexer and Error Encoder is to multiplex video and/or telemetry data onto a single bit stream at the 60-Mpps spread-spectrum chip rate. The 60-Mpps multiplexing rate allows up to 20-Mpps video or other prime mission equipment data to be used without the requirement for data storage. The multiplexed telemetry data includes parity encoded RCV status and telemetry data, as well as modem status information. The modem status information will be used by the GCS for positive acknowledgment that 1) the RCV has received a valid message command since the GCSs last transmission and 2) the RCVs PN generators are locked or unlocked (and, therefore, are an indication of forward-link reacquisition status). These positive indications of modem status to the GCS are worth many dB of processing gain.

As shown in the figure opposite, multiplexing of the RCV status and telemetry data with modem status data is accomplished in the Telemetry Multiplexer. The Telemetry Multiplexer output is sent through a Security Device (if used) to the Error Detector Encoder for parity bit generation. The resultant multiplexed telemetry signal, as well as the RCV video (or other prime mission equipment data outputs) signal is then multiplexed to form one of two composite chip patterns. The final multiplexed data patterns are generated by using the gated carrier timing developed in the Transmit Timing and Mode Control circuitry. The gated carrier pulse development is performed by providing no data to the 2 CPSM Modulator during the gated carrier interval. The gated clock signal routed to the RCV is used to control the application and timing of RCV status and telemetry data into the Telemetry Multiplexer. It is assumed, then, that RCV instrumentation external to the modem provides any necessary data buffering and formatting.

29266-33

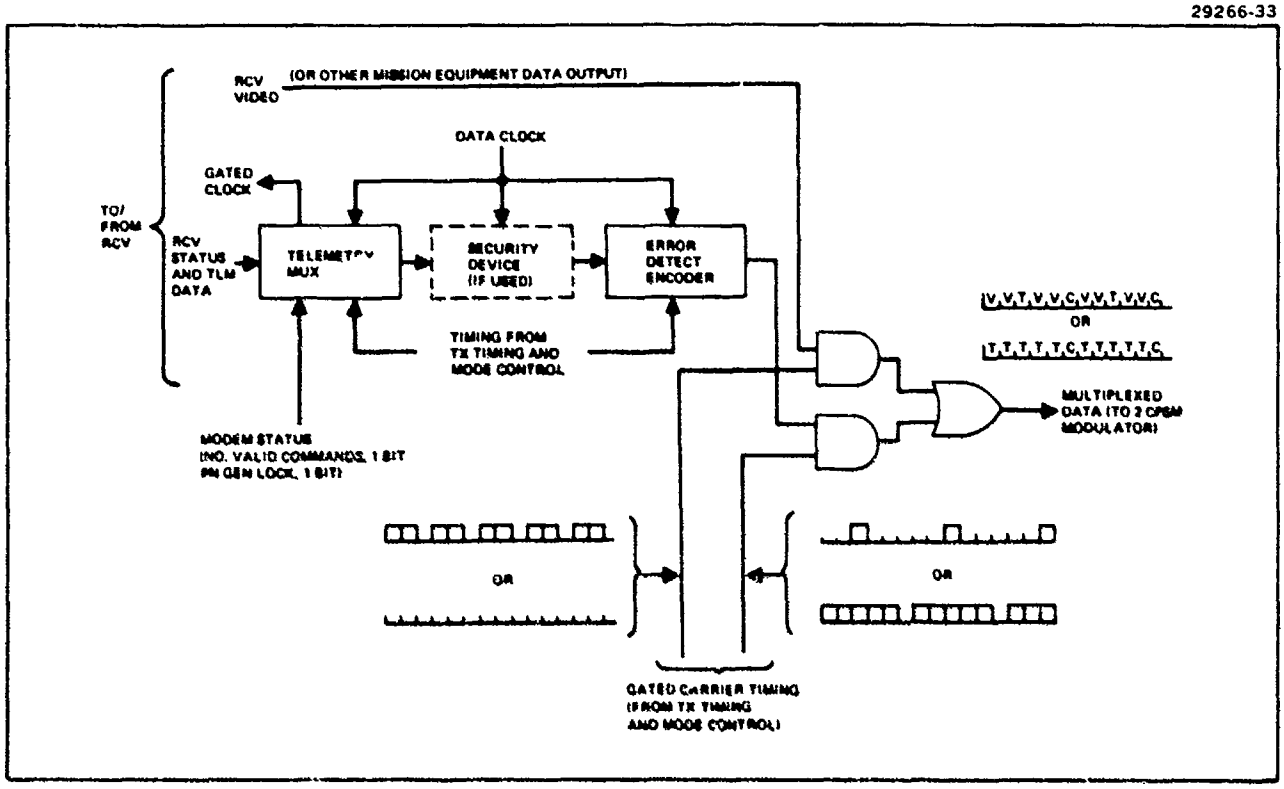

Multiplexer and Error Encoder (RCV Modulator Assembly). Multiplexing of video or other prime mission equipment data at data rates up to 20 Mpps can be performed without the requirement for data storage.

TRANSMIT TIMING AND MODE CONTROL CIRCUITRY

Multiple mode and data rate selection associated with the RCV modem is efficiently controlled by Transmit Timing and Mode Control circuitry.

The function of the Transmit Timing and Mode Control circuits is to control return-link transmission. A Link Control Register is used to store forward-link data for control of 1) TDMA burst transmission time to within 1 data bit interval, 2) video and telemetry (V&T) and continuous telemetry (CT) mode selection, 3) transmit frequency, and 4) antenna selection and positioning. Video rate selection circuitry is included to allow video or other prime mission equipments with data rates up to 20 Mpps to be used with the system. Message timing control circuitry allows system users to trade data rate for processing gain, thereby providing the desired system modularity.

As shown in the facing figure, link commands from the command decoder are routed into the Link Control Register. Link commands are used only to change the register contents so that link parameters remaining unchanged until modified by forward-link commands. Twelve bits within the Link Control Register are used in a binary coded decimal (BCD) form to represent numbers from 0 to 999. These thousand numbers are used to control the time during a half-frame when the RCV will initiate its TDMA burst transmission. Since each half-frame duration is 1/60 of a second, the initiation of each RCV TDMA burst transmission can be controlled to within 16.7 μs (approximately 3 nmi). The transmit timing bits are applied to the +1000 and Comparator circuit which functions to count from a 0 reference point at the start of each frame at a 60-Kpps rate. The counter continues counting until its count matches the contents of the transmit timing portion of the Link Control Register. At this time a transmit-initiate signal is generated, and the counter is reset to zero to repeat the generation of a transmit initiate signal during the second half frame interval. The generated transmit timing signal is used by the Message Timing Control circuitry to generate timing signals to activate the Power Amplifier, Telemetry Multiplexer, and Error Detector Encoder circuits. The activation timing is staggered to allow for sequential turn-on of the modulator functions. For example, the PA will be biased on prior to the application of any modulation to it; in this way constant level full-power amplification of the injected signal is ensured.

The data clock rate applied to the message timing control circuitry is manually adjustable on the ground prior to RCV deployment. The data rate is controlled so that the spectrum-spreading processing gain can be increased when less than 25 RCVs are deployed. The Return Link Clock Rates and TDMA Mode Burst Capacity chart includes a list of data clock rate versus maximum TDMA accesses per frame and processing gain. The maximum number of access per frame were derived by using a minimum average guard time between burst transmission of 300 μs. The 300-μs guard time (approximately 50 nmi) allows for incorporation of the limited PN search modes without any resulting transmission overlaps. In addition, the average 300-μs guard time is high enough to ensure that a relatively small amount of GCS updates are required to maintain sufficient guard times between the various RCV burst transmissions.

The PN Multiplexer timing circuitry functions to generate gated carrier timing patterns for use in the multiplexer circuitry. The generated timing pattern will be a function of the mode (continuous telemetry or video and telemetry) selected.

Video timing is manually selected on the ground prior to RCV deployment. Submultiples of 20 Mpps, from 1 through 10 (20, 10 ... 2 Mpps), are selectable.

The generated timing is sent to the RCV for gating the video data (or other mission equipment data output) into the multiplexer circuitry. The video gating commands are generated by the PN Multiplexer timing circuitry.

The frequency control portion (3 bits) of the Link Control Register is used for controlling the six possible output frequencies of the Frequency Synthesizer within the Transmit RF Assembly. The synthesizer output frequencies are in turn used to generate the six possible RCV transmit frequencies as dictated by the GCS.

Five bits of information are used for antenna commands, which include the RCV antenna selection (omni versus directional antennas) as well as commands for directional antenna sector positioning.

29266-34

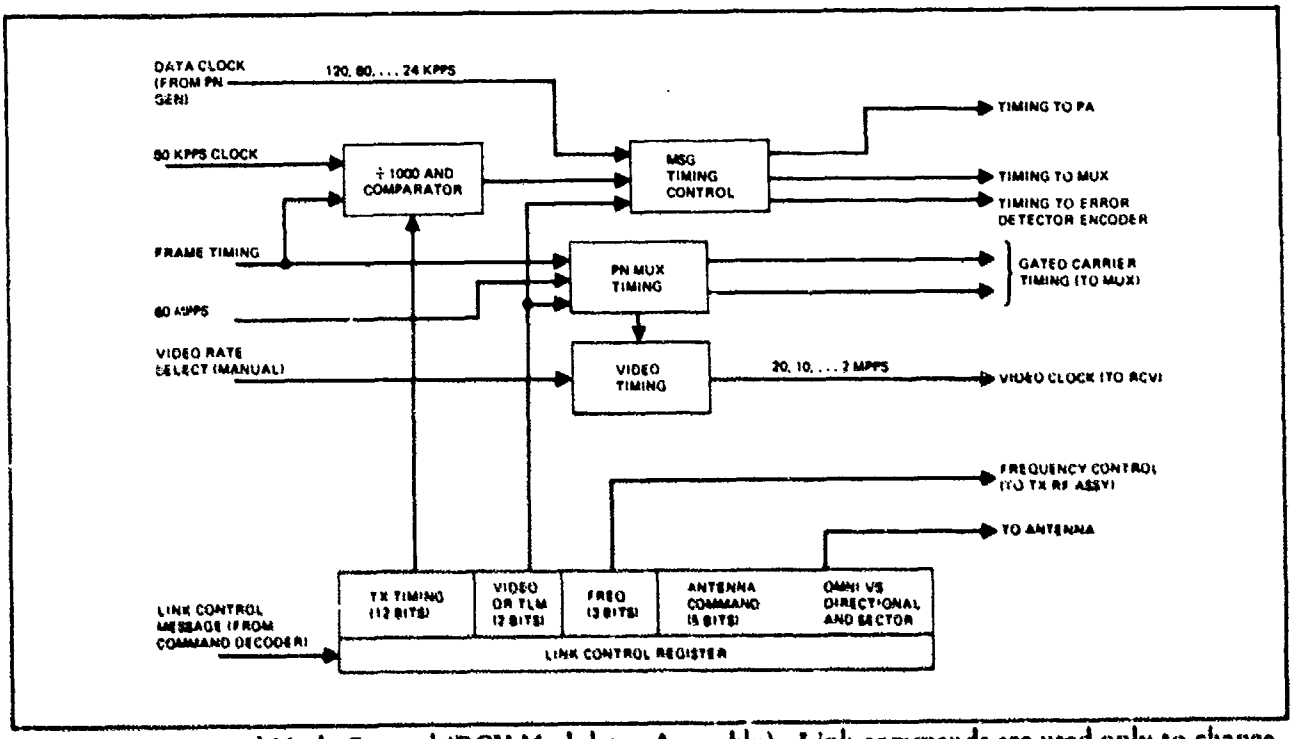

Transmit Timing and Mode Control (RCV Modulator Assembly). Link commands are used only to change Link Control Register contents so that link parameters remain uncharged until modified by forward commands.

RETURN LINK CLOCK RATES AND TDMA MODE BURST CAPACITY
Spectrum spreading processing gain increments assure near maximum gain for the given number of users.

Divisor N	Data Clock Kpps	Maximum* TDMA Accesses per Half Frame	Spectrum Spreading Processing Gain -dB
1	120	25	27.0
2	60	16	30.0
3	40	11	31.8
4	30	9	33.0
5	24	7	34.0
6	20	6	34.8
8	15	5	36.0
10	12	4	37.0

*Maximum accesses is with respect to maintaining a minimum average guard time per access of at least 300 microseconds (≈50 nmi).

DESCRIPTION OF TRANSMIT RF ASSEMBLY

Requirements for components of the Transmit RF Assembly are straightforward and therefore should pose no major design problems.

The 300-MHz IF output from the modem is converted to RF, amplified, and filtered before being routed to the diplexer. (See figure opposite.) The power amplifier will be required to operate in a pulsed mode during RCV TDMA burst transmissions.

The IF input from the 2 CPSM Modulator is frequency-translated to one of six possible GCS assigned transmit frequencies. The Frequency Translator output is amplified and routed through a bandpass filter to the diplexer. Transmit timing from the Transmit and Mode Control circuitry is used for control of the Power Amplifier. The Power Amplifier (PA) will remain on continuously during the continuous telemetry (CT) and video and telemetry (V&T) modes. During the TDMA mode, the PA will be biased on and off at the burst transmission rate. The frequency synthesizer will develop any one of six possible frequencies. The actual frequency developed is controlled by the frequency control logic within the Link Control Register (part of the Transmit Timing and Mode Control circuitry).

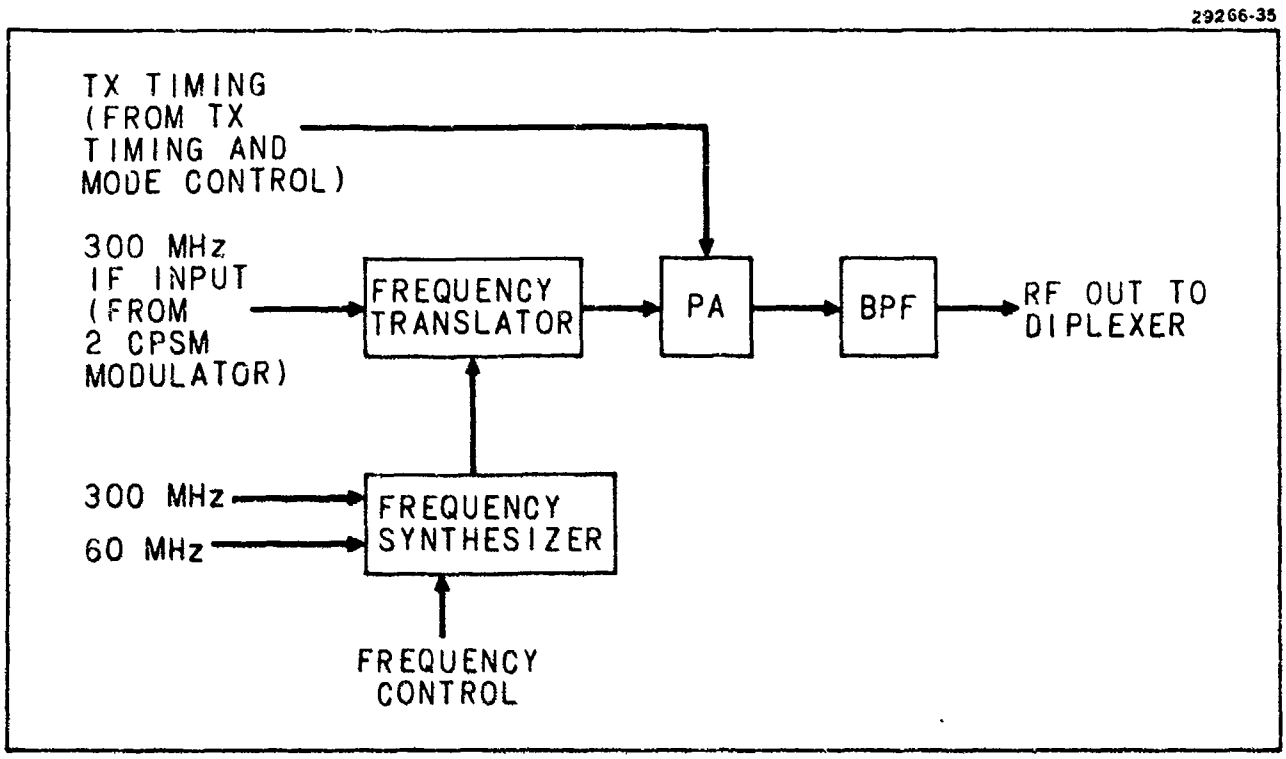

RCV Transmit RF Assembly. The power amplifier will operate in a pulsed or continuous mode, depending on whether the RCV modem is operating in its TDMA burst or a FDMA continuous transmission mode.

OVERVIEW OF GCS DEMODULATOR

The Demodulator processes and receives telemetry from up to 25 RCVs and video from up to 5 RCVs. The design is fully modular, takes maximum advantage of digital signal processing techniques, and uses the same building blocks as employed in the RCV modem design.

The key functions of the Ground Control Station receive subsystem are to down-convert the six frequency-divided return-link channels, extract the data from each channel, and operate on the received waveforms to derive and maintain code tracking. The code timing information is used for range determination. To accomplish these functions the ground station is equipped with six down-converters and IF processing strips, six Channel Demodulator and Message Decoder Assemblies (CDMDA), and 30 Timing and Control Modules (TCM). (See figure on facing page.) The down-converters and IF strips are contained in the Receive RF Assembly, which is not part of the modem. All circuitry subsequent to the 3-bit A/D converter in the 2 CPSM demodulator in the CDMDA is digital; thus all signal processing and decisioning are performed digitally.

The design is modular in the sense that if a ground station has to handle only deployments involving less than 25 RCVs or those in which the demand for 5 simultaneous video return links will not arise, the receiver equipment described can be readily reduced accordingly. The modules are functionally identical with the corresponding modules used in the RCV modem.

The distribution of functions between the CDMDAs and the TCMs was performed on the basis of obtaining the optimum combination between simplicity and system reliability. Functions that could be time-shared were assigned to the CDMDAs, because of the lower number of CDMDAs as compared with the number of TCMs, as long as the operational reliability was not compromised or the complexity of the interface between the CDMDAs and the TCMs was not noticably affected.

The GCS Terminal is assumed to be equipped with six receive antennas: one directional antenna for each of the five continuous (video) transmission return link channels and one omni-horizontal antenna for the TDMA return link. The output of each antenna is down-converted to 300 MHz IF before being supplied to the appropriate CDMDA. One CDMDA is provided for each return link channel; it extracts the transmitted data, performs carrier tracking, and derives PN advance/retard corrections. The CDMDA also performs error-detection decoding and generates valid message and receive data quality indications. Although identical in design, there are functional differences between the CDMDAs associated with the continuous channels and the CDMDA serving the TDMA channel.

When the CDMDA is assigned to perform demodulation of a return-link channel used for continuous transmission from a single RCV, the CDMDA is in continuous interface with one (and only one) TCM. The TCM provides necessary timing references for appropriate message demodulation and a synchronized replica of the PN pattern employed by the continuously transmitting RCV for message PN coding. The ground station modem is equipped with one TCM for each of the five continuous transmission CDMDAs. Since any RCV can transmit in the continuous mode, the five TCMs connected to the continuous mode CDMDAs contain PN code generators incorporating external PN pattern select features, enabling the Ground Station Control to command the TCM to generate any of the (unique) RCV PN codes.

The continuous mode transmissions generally contain video and telemetry data in a multiplexed form. The Mode selector on the CDMDA determines the video data integration time, while timing information generated by the associated TCM furnishes reference timing for correct demultiplexing.

The CDMDA, which operates in the TDMA mode (i.e., demodulates burst transmissions from different RCVs received separated in time), is interconnected with 25 TCMs. Each of these TCMs is associated with a unique RCV, generating the PN code of that RCV. The connection between the CDMDA and each of the TCMs is continuous. However, determination of the time when a specific TCM is to make use of the CDMDA outputs and when that TCM is to inject timing and PN code data into the CDMDA for meaningful demodulation is performed by each individual TCM. Information on correct time for each TCM to access the CDMDA is furnished by the Ground Station Control. The telemetry data demodulation rate for TDMA mode reception is inserted into the TCMs, which transfer the telemetry data clock to the CDMDA for burst demodulation.

The demodulated video data from the five continuous mode operating CDMDAs is individually outputted together with video data clock for external use. The telemetry data outputs from all CDMDAs are supplied to the Receive Message Buffer for message formatting and multiplexing.

The receive PN generator frame timing is supplied to the Ranging and Time Transfer unit (not part of the modem), where it is compared with the ground station transmit PN generator frame timing. Since in the normal mode of operation the RCV transmit PN generator is locked to the associated RCV receive PN timing, the difference between the two frame timing inputs into the Ranging and Time Transfer Unit represents a direct measure on the round trip propagation delay. The Ranging and Time Transfer Unit also makes possible insertion of a desired time delay into any receive PN generator, a convenience which is useful for rapid PN pattern acquisition.

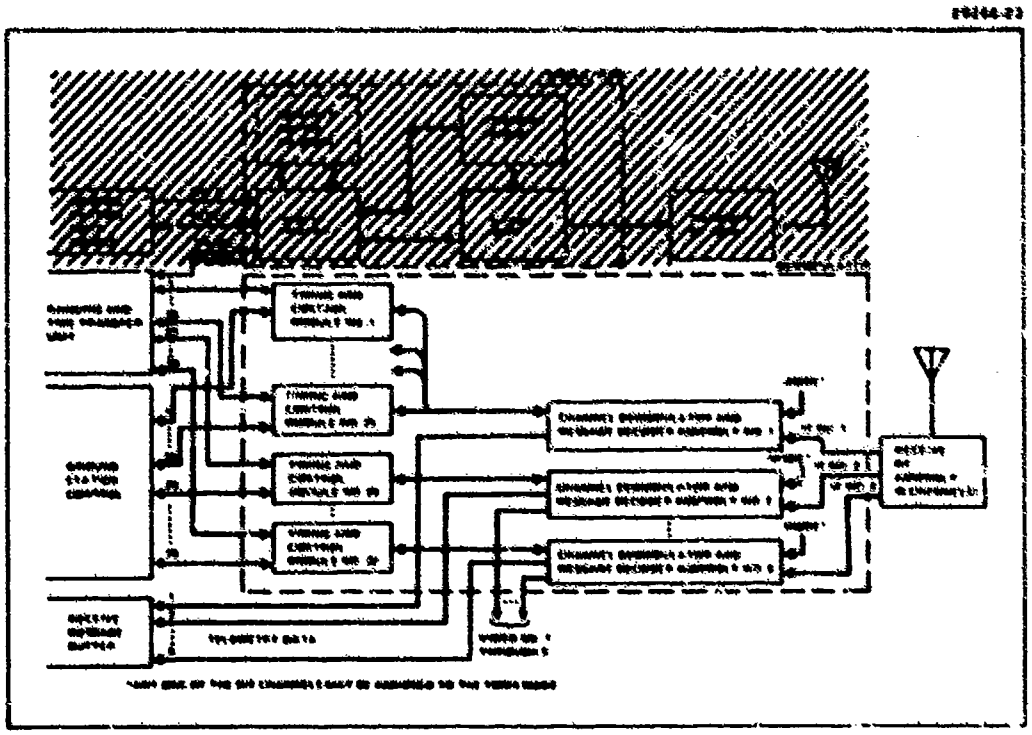

Ground Control Demodulator Components. The GCS is equipped with 6 down-converters and IF processing strips, 6 channel demodulator and message decoder assemblies, and 30 timing and control modules.

GCS RF ASSEMBLY

Six parallel, identical IF signal processing strips are employed in the RF assembly. These IF strips include design features contributing significantly to the modem performance.

The Ground Control Station RF Assembly consist of six identical, parallel RF-IF branches, each extracting and processing one of the 60 MHz bandwidth return link channels, transmitted by means of frequency division multiplexing. (Refer to the facing figure.) Prior to down conversion and selective filtering, the signal is bandpass filtered to reject interference from the forward link transmit RF carrier. The filtered signal is mixed with a carrier, furnished by the Carrier Generator, to obtain six 300 MHz IF center frequency signals, which are processed by the IF strips. The output of each IF strip is supplied to a separate Channel Demodulator and Message Decoder Assembly for data decisioning and signal tracking.

The six 300 MHz IF strips employed for signal processing are all alike and identical to the IF strips used in the RCV modems. The IF signal processing performed by these strips contribute significantly to the over-all communication performance. The passive spread-spectrum chip matched filter optimizes the signal-to-noise ratio before the signal is applied to the IF-amplifier. The time response of the chip matched filter matches the pulse shape of a PN chip. The IF-Amplifier and Gain Control employs a fast, tight, automatic gain control circuitry which in combination with the soft limiting performed by the 3-bit A/D conversion in the 2 CPSM demodulator enhances the dynamic range performance and short-burst jamming protection offered by the receiver. The automatic tracking notch filter provides rejection of narrowband interferences. It is recommended that provisions for one or more of these notch filters be included in the design. The notch filter is described in detail in a special topic.

It is recommended that the branch that processes the TDMA channel be connected to an omni-horizontal antenna, while each branch serving the continuous single RCV transmission channels be connected to a directional antenna for improved gain on receipt of video.

29266-83

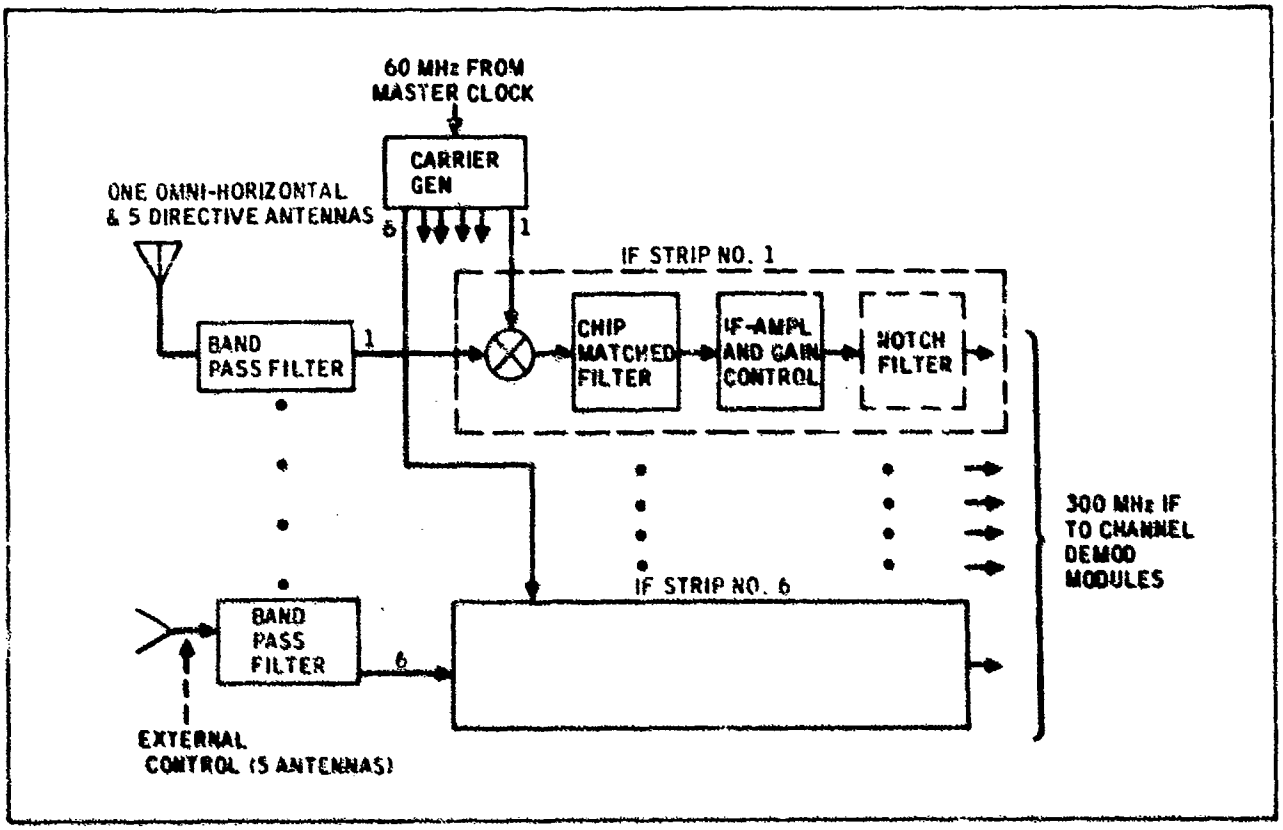

Ground Control Receive RF – Assembly. The six 300 MHz strips employed for signal processing are all alike and identical to the IF strips used in the RCV modems.

CHANNEL DEMODULATOR AND MESSAGE DECODER ASSEMBLY

All key functions performed by the Channel Demodulator and Message Decoder Assembly are identical with functions performed by the RCV demodulator. Demodulation functions not pertaining to the pseudonoise code generator were allocated to this assembly to minimize the overall GCS demodulator complexity.

The Channel Demodulator Message Decoder Assembly (CDMDA) performs 2 CPSM demodulation of the receive IF signal, carrier tracking, video and telemetry data decoding, data quality evaluation, and error-detection. (See figure opposite.) There is one CDMA for each of the six RF return link frequencies. Five of these assemblies service the five channels devoted to five (or fewer) RCV downlink transmissions of multiplexed telemetry and video. Each of these five CDMDAs is connected to its own associated Timing and Control Module (TCM), which provides the unique PN code employed by the video/telemetry transmitting RCV and the necessary timing functions for demodulation. The sixth CDMDA services the burst transmission TDMA return-link channel, demodulating the burst transmissions received from 25 (or fewer) RCVs operating in the TDMA mode for telemetry-only return-link communication. This CDMDA is interfacing with 25 TCMs, where each TCM is associated with a specific RCV, on a time division basis. The interface is active between the CDMDA and a specific TCM during the time when a message transmitted by the RCV associated with the specific TCM is received at the GCS. The six CDMDAs are identical in their design.

With the exception of some minor timing functions, video/telemetry de-interleaving, and video data demodulation, all functions performed by the CDMDA are identical with functions performed by the RCV demodulator. Demodulation functions, not pertaining to the generation of the PN code pattern and PN code timing, are allocated to the CDMDA and used on a time shared basis when the CDMDA services the TDMA link. This allocation minimized the overall hardware requirement since there are only six CDMDAs while there are 30 TCMs in a maximum capacity GCS.

The 2 CPSM Demodulator is identical with the 2 CPSM Demodulator used in the RCV, with the exception of a 3-bit instead of a 2-bit A/D conversion. Use of the 3-bit (eight-level) A/D conversion results in improved video data transmission performance at high video rates. All circuitry beyond the A/D conversion is fully digital.

The 2 CPSM Demodulator output signals are applied to four circuits. The operations of the Carrier Phase Lock Loop, PN Code Tracking Loop, and Telemetry Data Demodulator are described in detail in the RCV demodulator description. The Video Data Demodulator is similar to the Telemetry Data Demodulator, but involves summation of a smaller number of samples.

The Receive Message Timer, activated by the Receive Message Initiate, operates in one of two modes: the TDMA mode and the continuous mode. In the TDMA mode of operation, the occurence of a receive message initiate pulse causes the Receive Message Timer to generate a reset pulse. The reset pulse (in addition to resetting other system functions) resets the Data Quality Accumulator. Simultaneously, the Receiver Message Timer begins to count the number of data bit intervals in the received burst message. After an accumulated count of four data bit intervals (corresponding to the first four data bit intervals used for carrier phase and timing refinement), a pulse will be generated to 1) reset the Error-Detector Decoder, 2) reset the Message Quality Accumulator, 3) enable the data clock to be supplied to the Security Device (if used), and 4)

enable the telemetry clock to be supplied to the Receive Message Buffer (external to the modem). At the end of the information bearing portion of the parity encoded message, the Receiver Message Timer inhibits further supply of the clock to the Security Device and Receive Message Buffer. At the end of the encoded receive message the Receive Message Timer generates an end-of-message pulse. The Receive Message Timer also furnishes an active busy indication to all TCMs when the Channel Demodulator and Message Decoder Assembly is receiving a burst message from an RCV. The Message Quality Accumulator, as well as the Data Quality Accumulator circuits, is functionally identical with those previously described for the RCV modem. The Data Quality Accumulator functions to provide a data quality indication to the associated TCM for use in the search mode circuitry.

When in continuous receive mode of operation, the sequence of outputs of the Receive Message Timer differs from the sequence mentioned in that the functions leading up to determination of the time of occurrence of the first data bit after the Receive Message initiate pulse is received are deleted. In addition, the Data Quality Accumulator reset and the Busy Indicator output are inactive.

29266-24

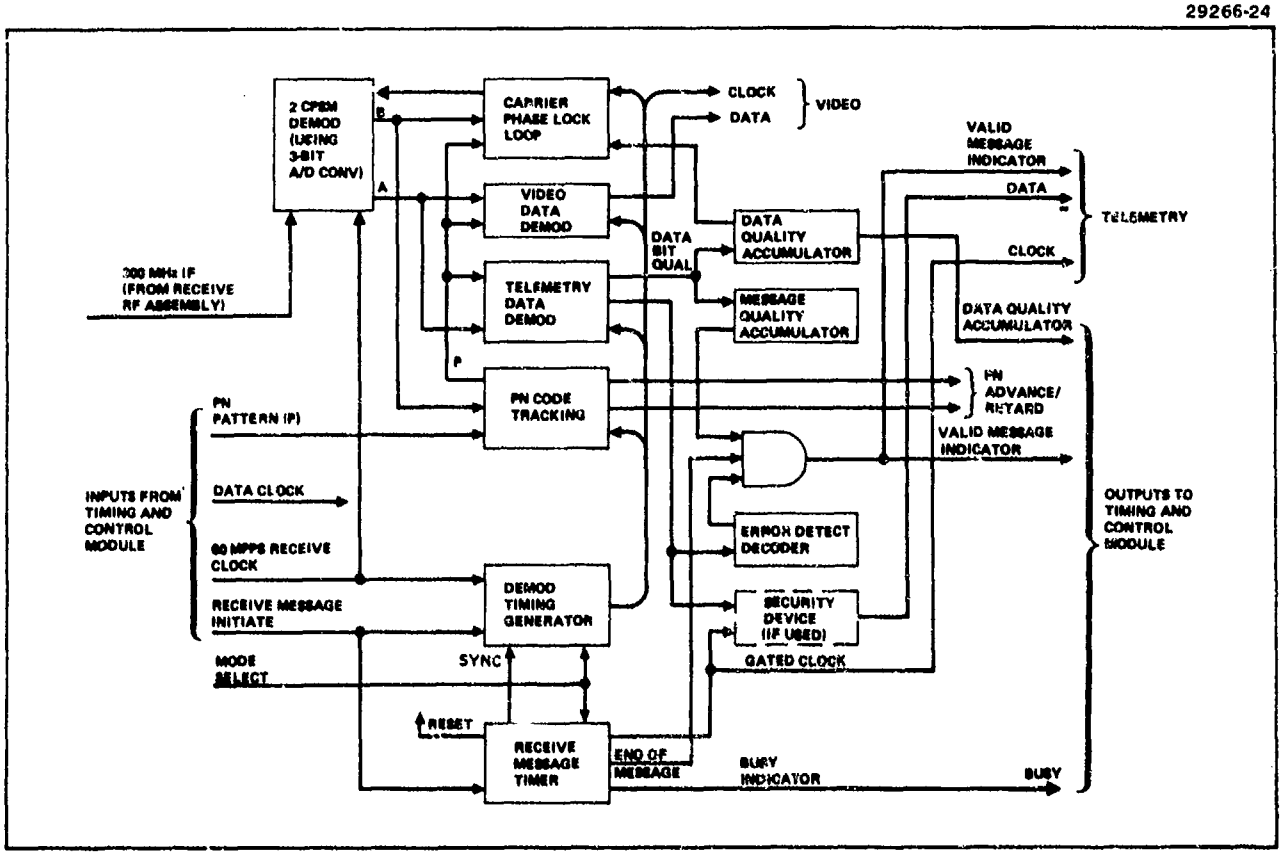

Channel Demodulator and Message Decoder Assembly (Ground Control Station). The Channel Demodulator and Message Decoder Assembly performs 2 CPSM demodulation of the receive IF signal, carrier tracking, video and telemetry data decoding, data quality evaluation, and error-detection.

TIMING AND CONTROL MODULE FUNCTIONS/GENERAL DESCRIPTION AND CONTINUOUS MODE OPERATION

The GCS demodulator is capable of simultaneously tracking pseudo noise coded return-link transmissions from up to 30 RCVs. These functions are performed on an individual RCV basis by the Timing and Control Modules.

The ground modem is equipped with 30 Timing and Control Modules (TCM), all of identical design. Twenty-five of these TCMs are servicing the TDMA receive channel, while each of the remaining five is connected to one of the five continuous transmission channels on a one-to-one basis. Since the maximum number of RCVs to be serviced simultaneously is limited to 25, the GCS demodulator could have been implemented by using only 25 TCMs. In that case, however, a switching matrix would have been required between the 25 RCVs and the 6 CDMDAs since any RCV can transmit on any of the six return-link channels. Use of 30 TCMs, distributed as already stated, completely eliminates the need for assignment switching between the TCMs and the CDMDAs. Because of the large number of timing and control information conveyed over the interface between a CDMDA and a TCM, the switching matrix and the associated control functions required would impose considerable complexity and cost. A TCM module, on the other hand, consists basically only of a PN code generator and relatively simple control circuitry. Performance of hardware complexity trade-off between the two approaches clearly favored the recommended approach.

Each TCM is designed to provide four basic functions. These are 1) PN code tracking and search; 2) generation of appropriate PN pattern and timing for demodulation of the associated RCV signal; 3) determination of time when to access the CDMDA servicing the burst transmission TDMA channel, when in TDMA mode of operation, and activation of the TDMA switch during this access time; and 4) estimation of interburst PN code adjustment required in the TDMA mode to alleviate the need to go into search mode at the beginning of each new burst, and incorporation of the predicted correction into the receive PN clock. Since all the TCMs are of identical design, the five TCMs associated with the continuous transmission channels are designed to satisfy all the features described even though functions 3) and 4) are not utilized as such by these TCMs.

The functional description of the TCMs interfacing with the continuous channels is presented in this topic. (See figure on facing page.) The additional functions performed by the 25 TCMs associated with the TDMA channel are discussed in the next topic.

Except for some very minor differences, the combination of a continuous channel CDMDA and its associated TCM performs the same functions as an RCV demodulator. Contrary to the RCV demodulator, however, where the PN generator outputs a fixed pattern that remains unaltered over the duration of a mission, the TCMs associated with the continuous mode CDMDAs must have the capability of generating a number of different PN patterns since these TCMs are not in a predetermined equivalency to any specific RCVs, and since each RCV employs a unique code. Under the control of the Ground Station Control, a TCM will be commanded to generate the PN code and timing unique to the RCV that is at any given time transmitting over the continuous channel that is associated with this TCM. Over the duration of a mission, each of these TCMs may be assigned to a number of different RCVs.

For a continuous mode channel, the TDMA switch is maintained continuously activated over the time during which a video mode transmission remains in progress. This is accomplished by the Mode input which effects operation of TDMA Switch Control. The Mode input originates from the Ground Station

Control, which also originates commands to the RCV to transmit in a continuous mode and informs the TCM regarding the PN pattern to be generated.

A single 60-MHz Master Oscillator provides all the TCMs with the eight (45-degree separated) phases of the 60-MHz reference used for receive timing slew control. In the continuous mode, the operation is identical with PN tracking employed in the RCV. The PN Advance/Retard commands, generated by the associated CDMDA, are fed to the Slew Control after passage of the Slew Estimator and Memory, which is inactive in the TCMs paired with continuous mode CDMDAs. Similarly, the PN Sync Decision and Search Control functions identically with the corresponding units employed in the RCVs.

29266-84

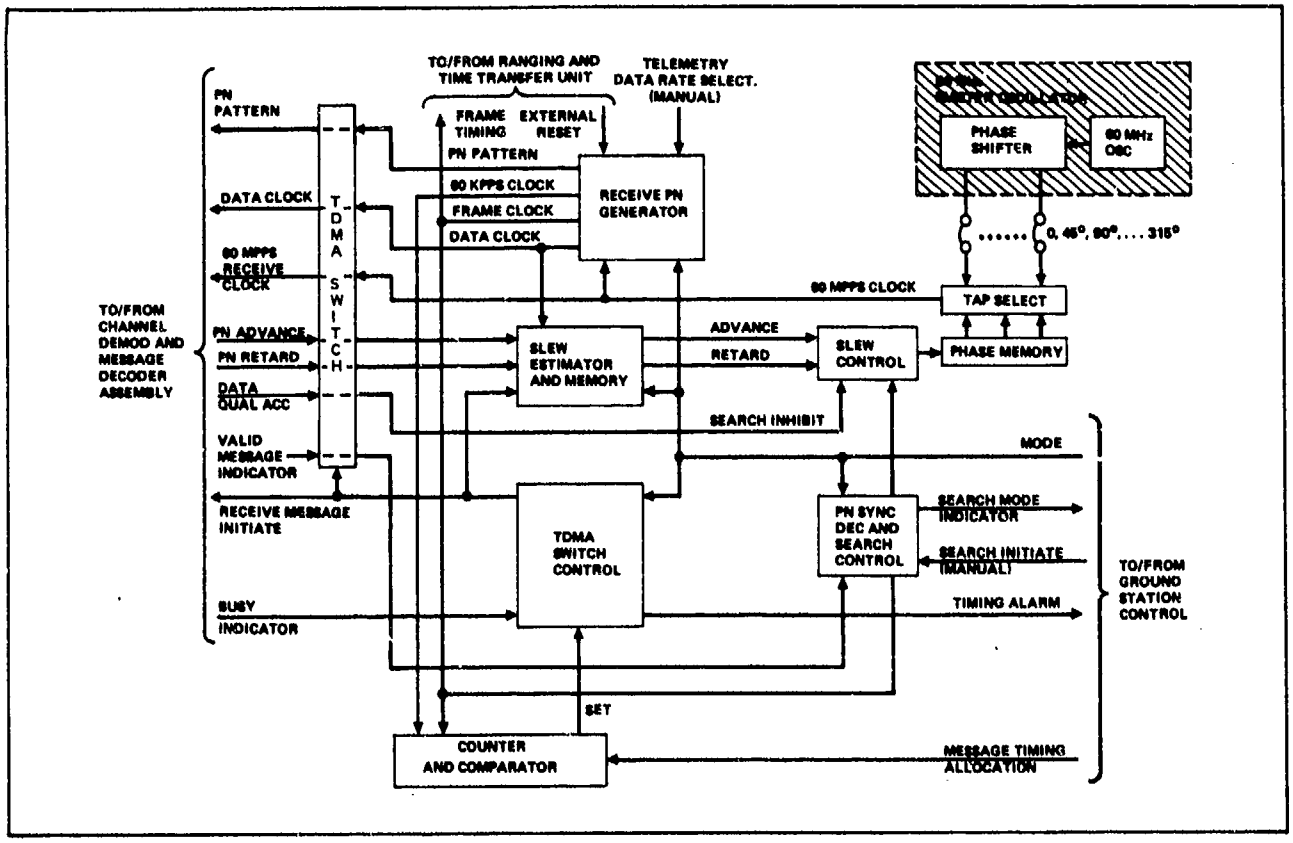

Continuous Mode Operations in the GCS TCM. The TDMA switch is maintained continuously in an activated position through control effected by the Mode input.

TIMING AND CONTROL MODULE FUNCTIONS IN TDMA MODE OF OPERATION

The TCM automatically accesses the channel at the time of arrival of each return-link burst from the particular RCV to which that TCM is assigned. No external control of the TCM is required except when the GCS computer directs the RCV to change its burst transmit time assignment.

The functions performed by a TCM were listed in the previous topic. As was stated, two of the functions incorporated into the TCMs are not used by the TCM which are associated with continuous mode reception. This topic addresses the additional capabilities of the TCMs that interface with the CDMDA assigned to service the burst transmission TDMA return-link channel (see figure opposite).

Because of the short-burst nature of the TDMA return-link transmissions and because of the range differentials of the 25 dispersed RCVs, it was determined that the necessary PN code tracking was performed best by using 25 independent PN code pattern generators. Thus 25 TCMs, each containing a PN code generator which furnishes the return-link PN sequence unique to one of the RCVs, are connected to the single CDMDA assigned to the TDMA channel.

Since 25 TCMs are connected to a single CDMDA, but only one TCM can be in active interface with the CDMDA at any given time, the GCS demodulator must include a timing feature that enables the appropriate TCM to access the CDMDA during the time span when the burst transmitted by the corresponding RCV is received. This problem is readily solved by making use of the relationship between the PN code generator timing and the Message Timing Allocation, and having each TCM determining its own time for accessing the CDMDA and completing the access operation.

Information on the start of the reception of the associated RCV transmitted message is furnished to the TCM by the Ground Station Control via the Message Timing Allocation interface. This information is the same as the Transmit Timing Command transmitted to the RCV, and since in either case the allocation is referenced to the PN frame timing, the Ground Control Station has exact knowledge of the message reception timing when the associated PN generators are in synchronism. The Counter and Comparator unit uses this information to generate a Set command to the TDMA Switch Control, which activates the TDMA switch and thereby establishes interface connection between the burst channel CDMDA and the TCM. In addition, a short pulse is transmitted over the Receive Message Initiate to the CDMDA.

The Busy Indicator, originating from the CDMDA assigned to the TDMA receive channel, conveys information to the 25 TDMA TCMs as to the demodulation status of the CDMDA operating in the TDMA mode. A busy indication is provided during the time this CDMDA is processing a burst receive signal. This input is employed by the TDMA Switch Control for two purposes. First, it is used as an inhibit signal if the TDMA mode CDMDA is already in process of demodulating a signal at the instant the Counter and Comparator unit of a TCM transmits a Set Command to the TDMA Switch Control. (This feature prevents "double" demodulation of the received signal.) Second, it furnishes release timing to the TDMA Switch Control at the end of the received burst message.

When operating in the TDMA mode, the PN Advance/Retard corrections generated during the receive burst interval are processed in the regular manner by the Slew Control of the TCM, which is associated with the message originating RCV. At the end of the receive burst, however, the Slew Estimator and Memory unit inserts into the Slew Control an additional number of correction corresponding to the best estimate of the number of corrections necessary to

compensate for the interburst timing change to be incurred by position changes due tc constant RCV velocity. This estimate is derived by the Slew Estimator and Memory unit by observing, memorizing, and continuously updating the number of interburst corrections required to maintain accurate PN code tracking between bursts.

The PN Sync Decision and Search Control unit functions identically with the corresponding units employed in the RCVs, with the exception that when the Mode input to the TCM module indicates TDMA mode of operation, full pattern search is inhibited. If full pattern search is necessary, a continuous channel must be used. This is accomplished by the ground station transmitting a command to the applicable RCV to switch to a continuous channel, where the search is performed. Once PN synchronization has been established, but prior to the release of the continuous channel, the frame timing of the PN generator of the continuous channel TCM is transferred to the applicable TCM that is connected to the TDMA channel. This transfer is performed via the Ranging and Time Transfer Unit through use of the External Reset feature of the PN generator. The External Reset is also utilized to insert a given delay into any receive PN generator relative to the ground station transmit PN generator. This feature is used to dial in (at the Ranging and Time Transfer Unit) an approximate round trip propagation delay to the associated RCV, thereby enabling pattern acquisition in the TDMA mode.

29266-84

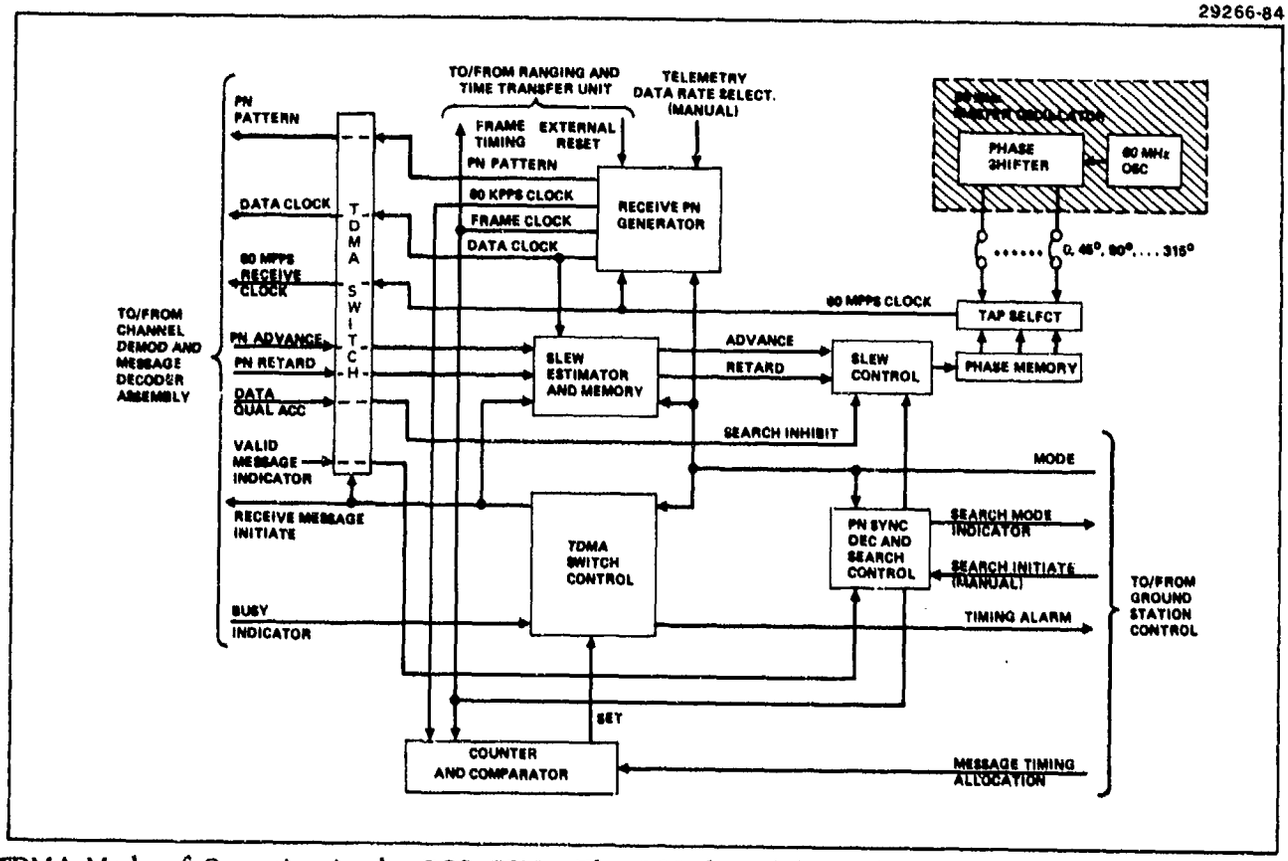

TDMA Mode of Operation in the GCS TCM. The GCS demodulation has a timing feature to enable the appropriate TCM to access the CDMDA when the burst transmission by the corresponding RCV is received.

SECTION 5
DESIGN ALTERNATIVES AND GROWTH FEATURES

Narrowband Interference Rejection by Automatic Tracking Notch Filters 5-0
ECCM Benefit of Error-Correction Encoding on Forward Link 5-2
ECCM Benefit of Error-Correction Encoding on Return Link 5-4

NARROWBAND INTERFERENCE REJECTION BY AUTOMATIC TRACKING NOTCH FILTERS

Analytical results show that a significant improvement in WCCM performance can be realized through the incorporation of tracking notch filters to provide narrowband interference rejection.

A potential problem area for WCCM is the presence of very large narrowband interfering signals within the WCCM operating bandwidth. The source of these narrowband signals may be jamming but is more likely to be non-ECM transmissions from emitters not falling under the direct control of the WCCM users. Narrowband interference is a threat both to the GCS, since its antenna is likely to be pointed at an uncontrolled area, and to the RCV whose flight profile may carry it close to in-band emitters. The spread spectrum nature of the WCCM allows it to discriminate against narrowband interference which is much stronger than the desired signal within processing gain limitations. For those narrowband interferers which are toc strong to be processed out, the use of automatic tracking notch filters to perform predetection filtering of the interference has been found to contribute significantly to system performance. This conclusion is based on analytical results as well as observed experimental results of a tracking notch filter bank which was developed as a part of a spread spectrum receiver.

Several techniques for mechanizing a tunable notch filter have been investigated. The facing figure is a functional block diagram of a tracking filter currently being investigated under a contract from RADC (F30602-72-C-0390). It is anticipated that at most two or three filters will be required for WCCM application. The configuration shown can readily be cascaded in small numbers to form a multiple filter bank and appears to be well suited to application on the WCCM. In the approach shown, simple high pass filters at baseband are transformed into band reject filters at the RF interference frequency by mixing the input RF down to baseband in-phase and quadrature channels and mixing the baseband signals back up to RF after high pass filtering. Shaping of the RF response to give the desired shape factor for the notch filter is easily accomplished with realistic element Q values in the high pass filter. Automatic acquisition and tracking of interfering signals is readily accomplished with standard tracking loop design techniques.

Analytical results relating to the effect of notch filtering on the desired spread spectrum signal and to the improvement in system performance to be gained from notch filtering have been obtained. Some of these results are presented in greater detail in Appendix D.

Briefly, the results show that notch filtering introduces very little distortion of the spread signal. In particular, if the ratio of 3 dB notch bandwidth to 3 dB signal bandwidth is less than 0.2, then the loss in peak signal to noise ratio is less than 1.2 dB in a wideband noise environment. In a narrowband interference environment, the signal to total noise ratio is improved significantly through notch filtering. If the number of interfering signals is less than the number of filters, then the narrowband interference can effectively be completely eliminated. In addition, computer simulations have shown that in situations where the number of interfering signals exceeds the number of filters, a median improvement in the signal to noise ratio on the order of 10 dB can be obtained. These results, and consideration of the environment in which the WCCM will be operating, indicate that serious consideration should be given to the incorporation of a small number of tracking notch filters in the WCCM concept.

29266-82

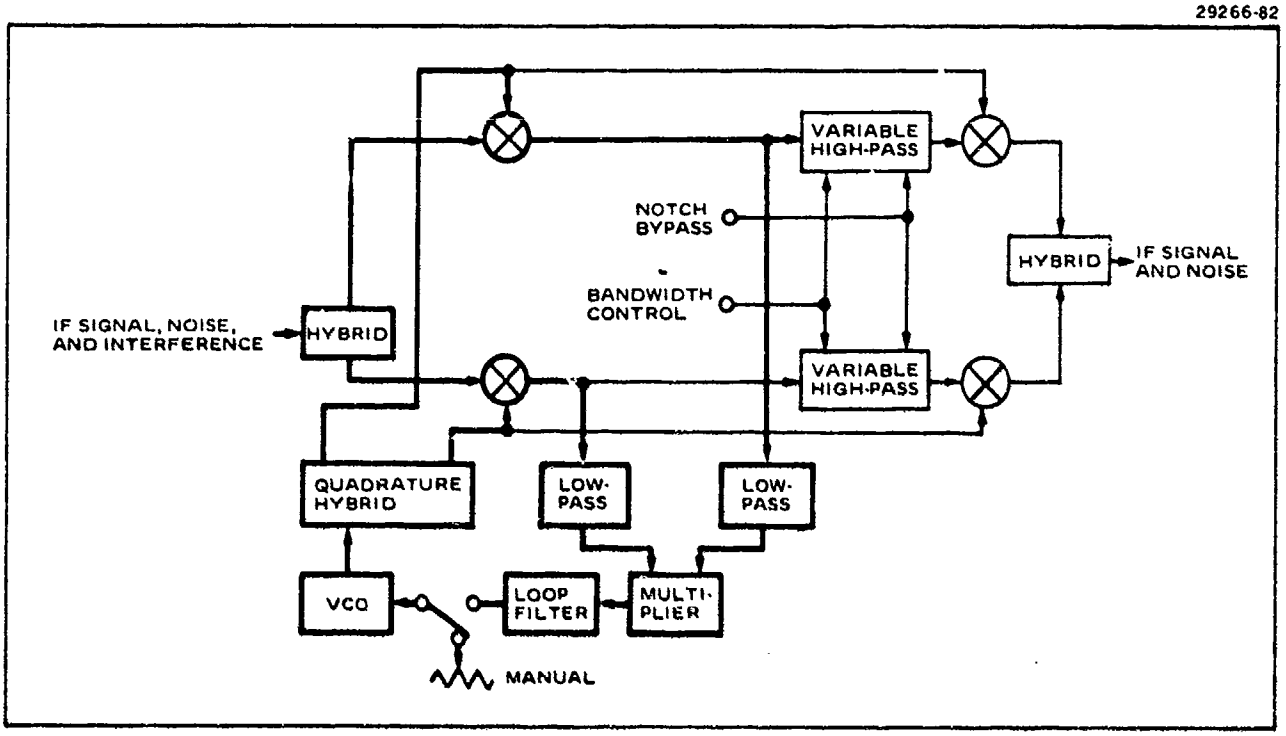

Voltage-Tuned Variable-Bandwidth Tracking Filter. This configuration is well-suited to WCCM application and provides an efficient solution to the problem of narrowband interference.

ECCM BENEFIT OF ERROR-CORRECTION ENCODING ON THE FORWARD LINK

An easy and effective way to improve both benign and ECCM performance on the WCCM forward link (at additional cost) is to add error-correction encoding with simple interleaving. The operational penalty is a delay of approximately one 80-bit block length before the data/command is available to the RCV.

The Hughes WCCM includes error-detection encoding as an integral part of the forward link transmission in order to protect against acceptance of messages with errors and acceptance of spoofing. No ECCM benefit is obtained in terms of improved signal-to-jammer ratio performance, with this encoding. In particular, a burst-jamming strategy is quite effective when no error-correction encoding is employed. Incorporation of error-correction encoding as a growth feature of the WCCM will provide, when installed, protection against burst-jamming by reducing the special effectiveness of the burst-jamming strategy while at the same time improving performance in a benign environment.

It has been determined that a center-frequency CW jammer is most effective against the 2 CPSM waveform used in the WCCM. Equally effective is most any jammer modulation which is concentrated in the center of the WCCM channel with a keying rate much slower than the 60-Mpps WCCM rate. However, a jammer who can trade average power for peak power, without losing any energy, will be several dB more effective than by jamming a full message or 80-bit block. For example, a constant energy jammer can have 1 watt of continuous power over a message, or 2 watts of peak power over one-half a message, or 10 watts of power over one-tenth of a message. Since a jammer need only cause one error to have the error-detection code reject the message, the optimum strategy is to concentrate available jammer energy in the duration of just a few bits. There is an optimum jammer burst length, as seen in Figure A, which is a function of the received signal-energy-to-jammer-energy ratio (SE/JE), the type of signalling and detection employed, the message length, and the static and dynamic operation of the Automatic Gain Control (AGC) and Analog to Digital (A/D) conversion combination. The gated-carrier transmission method permits the use of antipodal signalling and coherent detection. The curves in Figure A are labeled in a consistent manner by jammer energy and by signal energy. Thus, at full-message jamming, the SE/JE is actually a continuous signal power to continuous jammer power ratio. As a particular jammer begins to trade average power for peak power (by bursting), the effect on the probability of receiving a completely correct message is immediately apparent. That the curves show minima or optimum burst lengths as a function of SE/JE is explained as follows: the longer the jammer burst is, the less chance there is of causing an error because of the reduction of jammer energy applied to any particular bit; at the other extreme, at very short jammer burst lengths – neglecting end effects, a jammer bursting over only 1 bit can have at best a 50-percent chance of causing an error, and over 2 bits, at best a 75-percent chance of causing an error and thereby effecting a message rejection. For example, for full-message jamming, an SE/JE of about -24.7 dB at the receiver input should result, theoretically, in about a 50-percent probability of correct message reception. However, at a 15-percent jammer burst length, a jammer 4.7 dB less powerful will produce the same result. The reason for choosing a 15-percent duty cycle as optimum is that the jammer most likely does not know within 10 dB (propagation loss uncertainty) what the SE/JE at the RCV is. If the jammer bursts too short, there will be less chance of causing an error because too few bits are covered. Thus a longer burst is prudent, while losing little effectiveness, since the object is to cause more than 90-percent of the messages to be rejected.

By breaking each message of 80-bits into 8 blocks, each 10 bits long, by encoding each 10 bit-block into 14 symbols capable of correcting a single symbol error per block, and by simple interleaving of the 8 blocks in a uniform manner, an ECCM and benign performance improvement is obtained. The cost of some additional hardware and an operational penalty of a one-message delay for error-correction decoding before error-detection decoding will result. However, a benign performance (full-message jamming at 50-percent probability of correct message decoding) improvement of about 0.8 dB may be seen in Figure B. Simultaneously, the curves are considerably flattened, thus showing reduction of the special effectiveness of burst-jamming. In fact, at a 50-percent jammer burst length, a jammer gains only about 1.2 dB of effectiveness over full-message jamming, an amount which is hardly worth the bother. The ECCM burst-jamming benefit is thus 4.2 dB because of the addition of error-correction encoding.

29266-11

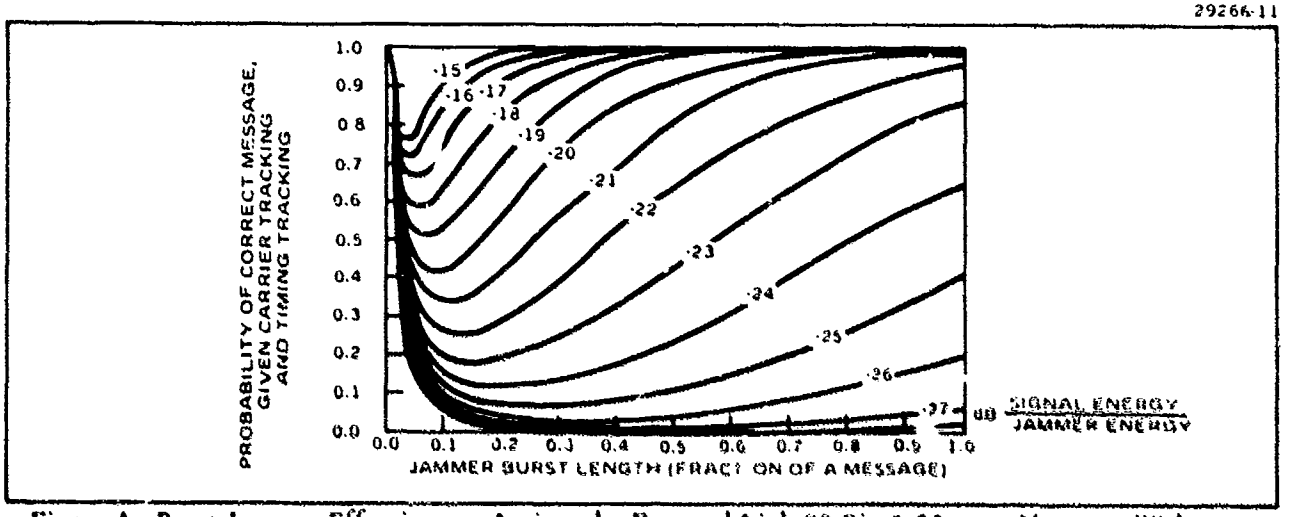

Figure A. Burst-Jammer Effectiveness Against the Forward Link 80-Bit, 1.33 msec Message. With no error correction, a constant-energy, optimum-burst-length jammer needs about 4.7 dB less energy than a full-message jammer to obtain a 50-percent probability of correct message.

29266-12

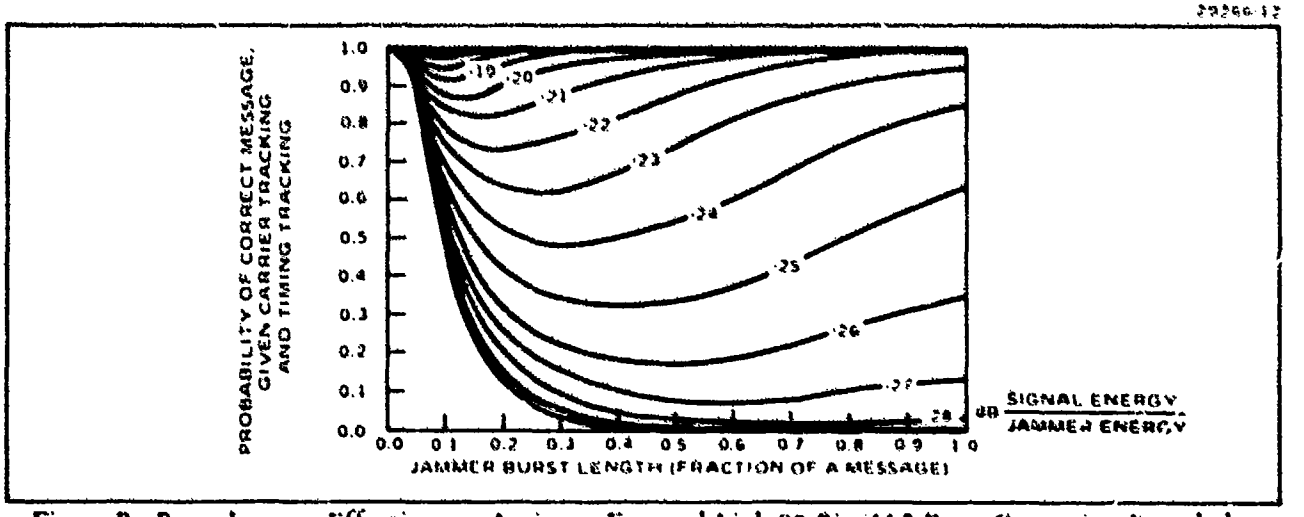

Figure B. Burst-Jammer Effectiveness Against a Forward Link 80-Bit (112 Error-Correction-Encoded Symbols), 1.33 msec Message. With simple error-correction and interleaving, a burst-jammer is only about 1.2 dB more effective than a full-message jammer, and benign performance is improved by about 0.8 dB over that obtained with no error-correction.

ECCM BENEFIT OF ERROR-CORRECTION ENCODING ON THE RETURN LINK

The return link, as well as the forward link, will receive an ECCM and benign performance benefit with the addition of error-correction encoding and simple interleaving. Some caution, however, is advised in attempting to compare dB improvements between the forward and return links.

The return link of the WCCM also includes error-detection encoding, except that a 40-bit TDMA burst message is covered rather than the TDM 80-bit message for the forward link error-detection encoding. The previous topic concerning the generalities and meanings of the burst-jamming strategy and the SE/JE curves, respectively, is referred to. Although there will inevitably be a performance comparison between the 40-bit return link block length and the 80-bit forward link block length, a fair evaluation is at best difficult. Since forward and return links operate at the same bit and chip rates and since it may be assumed for comparison that the transmit power is the same, the energy per message is 6 dB less for the return link than for the forward link. (Three dB comes from 40 bits rather than 80 bits, and an additional 3 dB accrues because only 500 chips are used per bit on the return link as compared with 1000 chips per bit on the forward link.) Thus, is a jammer with a CW power rating of, say, 100 watts, which shows up on the forward link curves as a -23 dB SE/JE, a -29 dB SE/JE jammer or a -23 dB SE/JE jammer on the return link curves shown in Figure A opposite? Depending on point of view, the jammer referred to, can be rated either way. For the present, the philosophical argument will be ignored, and the ECCM benefit of error-correction encoding on the return link will be examined separately from the forward link.

For a full-message (40-bit) jammer of -22.7 dB SE/JE, a 50-percent probability of receiving all 40 bits correctly is attained. Only at full-message jamming is this SE/JE also a continuous signal power to continuous jammer power ratio. At a 25-percent duty cycle, the jammer needs 3.1 dB less energy to do the same job, i.e., a -19.6 dB SE/JE jammer. By breaking the 40-bit message into 4 blocks of 10 bits each, by encoding each block into 14 symbols capable of correcting one symbol error per block, and by simple interleaving of the 4 blocks in a uniform manner, an ECCM and benign performance improvement is obtained. Importantly, the 56-symbol message is transmitted with the same power and energy as the 40-bit message, i.e., same length of time. Therefore, the energy per symbol is less in the 56-symbol message than the energy per bit in the 40-bit message code. However, the "power" of the code is such that a 0.7 dB SE/JE improvement results for full-message jamming at the 50-percent probability point in Figure B. The flattening of the curves is noteworthy and shows a reduction of the special effectiveness of burst-jamming. In this case a burst-jammer at a 50-percent duty cycle requires 0.7 dB less energy than a full-message jammer. The results of error correction coding are an ECCM burst-jamming benefit of 3.1 dB (-19.6 at the 25-percent burst length in Figure A minus -22.7 at the 50-percent burst length in Figure B), and a benign performance improvement of 0.7 dB.

A point to be stressed is that a fair comparison can be made between a given message without error-correction encoding and one with error-correction encoding. But the comparing, fairly, of the performance of a 40-bit message with an 80-bit message – where the energy per bit is not the same – requires care. In any event, the incorporation of error-correction coding in either the forward link or return link or both will provide improved benign performance and improved burst jammer protection over the links without error-correction encoding.

29266-13

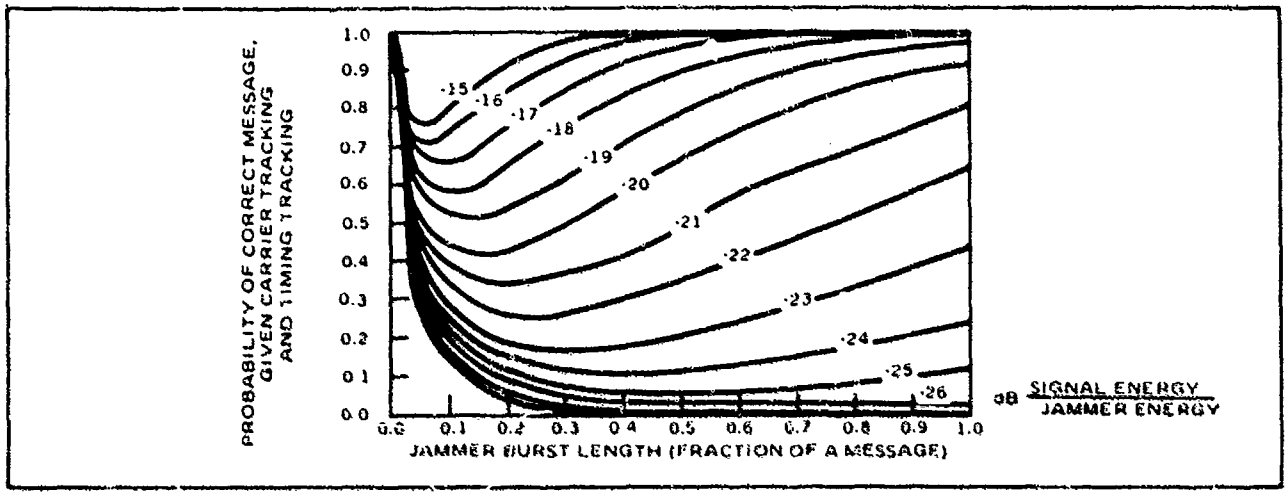

Figure A Burst-Jammer Effectiveness Against the Return Link 40-Bit, 0.33 msec Message. With no error-correction, a constant-energy, optimum-burst-length jammer needs about 3.1 dB less energy than a full-message jammer to obtain a 50-percent probability of correct message.

29266-14

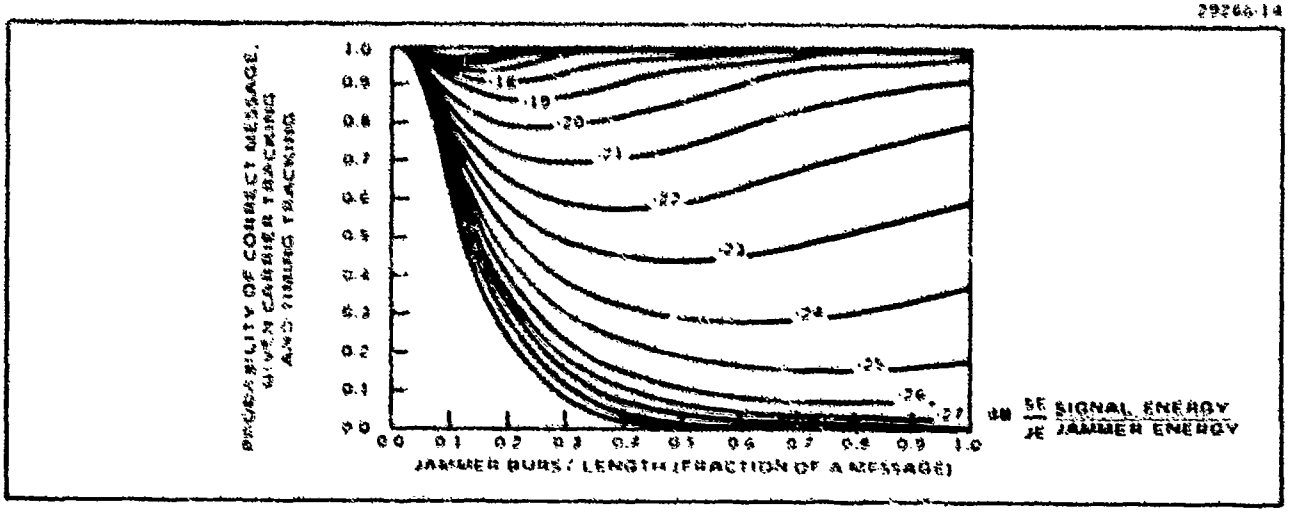

Figure B. Burst-Jammer Effectiveness Against a Return Link 40-Bit (56 Error-Correction-Encoded Symbols), 0.33 msec Message. With simple error-correction and interleaving, a burst-jammer is only about 0.7 dB more effective than a full-message jammer, and benign performance is improved by about 0.7 dB over that obtained with no error-correction.

SECTION 6
RECOMMENDED EXPERIMENTAL MODEL CONFIGURATION

Scope and Rationale

Objectives and Scope of the Experimental Model Phase 6-0
Overall Rationale for Design of the Experimental Model System . . . 6-2

Recommended Configuration of the Experimental Model System

Experimental Model System Configuration 6-4
Experimental Model Master Ground Control Station Configuration . 6-6
Experimental Model RCV Terminal Configuration 6-8
Experimental Model Ground Slave Station Configuration 6-10
Capabilities of the Master Ground Control Station Test Unit 6-12
Capabilities of the RCV Test Unit 6-14
Capabilities of the Load Simulator 6-16
Physical Configuration of the Ground Station Terminals 6-18
Description of Ground Control Station Modular Control Units 6-20
Physical Configuration of Experimental RCV Terminal 6-22

RF Equipment Recommendations for the Experimental Model System

Recommended Frequency Band 6-24
Preliminary Design of RF Equipment 6-26

OBJECTIVES AND SCOPE OF THE EXPERIMENTAL MODEL PHASE

The objective of the Experimental Model Phase is design and development of experimental models of Wideband Command and Control Modems and associated test units which will permit demonstration and Government evaluation of the full performance capabilities of these modems.

The objective of the Experimental Model Phase is to develop experimental models of the RCV and MGCS modems which will demonstrate, and permit Government test and evaluation of, all of the design features and performance capabilities of the Wideband Command and Control Modem designs conceived and refined in the conduct of the waveform and conceptual design study. The MGCS terminal experimental model(s) should include provision for demonstration of system capacity through incorporation of a load simulator. Capability for demonstration and evaluation of the range measurement features of the GCS modem for RCV position location should be included. At the Government's option, a Ground Slave Station (GSS) modem could be provided to permit demonstration of the RCV position location capability.

Detailed design, fabrication, assembly, and delivery of experimental models of the RCV and MGCS modems will permit full demonstration and evaluation of all of the design features of the WCCM (refer to Table I). The scope of the Experimental Model Phase is described in Table II.

A waveform and conceptual block diagram design for the Wideband Command and Control Modem (WCCM) has been achieved under this contract. The resulting waveform design employs a 60-MHz-bandwidth continuous transmission addressed TDM forward link approach to digital command data communication at 2400 bps to each of up to 25 Remotely Controlled Vehicles (RCVs) from a Master Ground Control Station (MGCS). The waveform design incorporates six 60 MHz channels in a hybrid FDMA/TDMA return link for status/response telemetry transmission at up to 2400 bps from each of 25 RCVs to the MGCS, and for 20 Mbps transmission of prime mission equipment sensor data from each of 5 RCVs.

Detailed conceptual block diagram designs for both the RCV modem and the MGCS modem have been completed during this design study. The resulting RCV modem design emphasizes modem simplicity consistent with provision for a high degree of forward link reliability and ECM resistance. Flexibility of application through modular design of the GCS modem permits most cost-effective employment of the system in a wide variety of operational configurations for different RCV deployment levels and mission requirements. System cost-effectiveness is further enhanced by maximum utilization of common circuit modules in both the RCV and MGCS modem designs. Furthermore, the modem for a second, receive-only, slave ground station for incorporation of RCV position location capability in the system is configured by combining the receive sections of an MGCS modem with that of the RCV modem to include a timing transfer link between the two ground stations.

TABLE I. DESIGN FEATURES OF THE WCCM TO BE DEMONSTRATED BY THE EXPERIMENTAL MODEL SYSTEM

- Forward link data-rate capacity and communication reliability
- Forward link signal initial acquisition, reacquisition, and tracking by the RCV modem
- Forward link ECCM performance capability
- Forward link data rate/processing gain modularity
- RCV command decoding and WCCM link command processing by the RCV modem
- Return link TDMA telemetry and/or prime mission equipment sensor data rates and communication reliability
- Positive feedback features of waveform and modem designs
- RCV burst transmission control for TDMA return link transmission under control commands from the master MGCS
- MGCS modem time difference measurement for RCV ranging
- GSS terminal timing transfer and synchronization for time difference measurements for RCV ranging (if the Government chooses to fund development of the slave station modem)
- MGCS modem capacity to separate and demodulate 25 telemetry signals by employment of a return link RCV loading simulator
- Return link data rate/processing gain modularity
- Return link ECCM performance capability
- MGCS modem modular configuration features.

TABLE II. SCOPE OF THE EXPERIMENTAL MODEL PHASE

- Completion of final circuit, logic, and physical packaging design of the MGCS, GSS, and RCV modem experimental models
- Fabrication, assembly, and pre-delivery test of the following deliverable items:
  - One to five RCV modem experimental models, including special test panels
  - One MGCS modem experimental model, including special test panels
  - One GSS modem experimental model (at Government option), including special test panels
  - One loading simulator to simulate return link transmissions from up to 24 additional RCVs. The loading simulator will be an integral part of the MGCS.

OVERALL RATIONALE FOR DESIGN OF THE EXPERIMENTAL MODEL SYSTEM

The Experimental Model system design should permit full demonstration and evaluation of all significant design features and performance capabilities of the modems, while minimizing the development cost by maximum utilization of standard test equipment and deemphasizing fully compliant system physical characteristics.

It is imprudent to consider development of a maximum configuration WCCM system with an automatic computer controlled Ground Control Station Modem in order to meet the objectives of the Experimental Model Phase. The interests of the Government and the Contractor can best be served by developing a minimum cost system configuration on a relatively short development program, which will still facilitate demonstration and evaluation of all of the significant design features and performance capabilities of the modems.

The RCV modem experimental model(s) should be electrically and functionally equivalent to the eventual fully compliant model. However, it need not be physically equivalent in terms of achieving the optimum packaging density, form factors, and full military specification compliance which will eventually be required for operational deployment in RCVs. Procurement of associated RCV avionics equipment to demonstrate the command, telemetry, and prime mission equipment sensor data communication capabilities of the modems should not be required. Rather, development and delivery of simple inexpensive test units which simulate the modem's interfaces to such avionics is to be recommended.

A single return link RF channel capability is expected to be utilized by the government for the following phase of the experimental model program. Therefore, the full six-channel downlink configuration of the maximum capability version of the MGCS Modem design need not be developed. All of the system functions and performance features of the fully compliant MGCS modem can be demonstrated with a single return link channel version of the modem, utilizing only one Channel Demodulator and Message Decoder Assembly. This would permit non-simultaneous return link operation of the modem in either the burst TDMA telemetry mode, or the continuous video and telemetry mode. A small number of MGCS Modem Timing and Control Modules will suffice for demonstration of unique capabilities provided by that modem design feature.

Again, no special effort should be made to physically configure the MGCS Modem in its eventual, tactically-deployable configuration. For experimental model test purposes, conventional commercial grade 19-inch rack construction of the modem will suffice. Similarly, experimental model cost and schedule requirements can be reduced by minimizing development of specially designed printed circuit cards with custom etched circuitry patterns. Rather, wherever possible, standard breadboard printed-circuit cards should be employed for modem fabrication, at some increase in modem size and weight.

The capability of the MGCS modem to handle maximum return link traffic capacity, and effectively operate with a wide dynamic range of received signals from widely dispersed multiple RCVs, can be adequately proven using a simple, specially designed load simulator incorporated into the Master Ground Control Station Modem cabinet.

Ground Control Station modem data sources and sinks can be effectively provided by simple, specially designed deliverable test units. Standard test equipment can be employed for most MGCS performance monitoring and measurement purposes during the experimental model test phase. Time-difference measurements made by standard test equipment on modem outputs for ranging purposes can permit full evaluation of the ranging capabilities provided by the modem and waveform design.

In a full capacity network of high performance RCVs, real-time range measurement and position location computations will require employment of a small general-purpose computer in the MGCS. This computer would also perform the computation and generate control output commands for forward link command of individual RCV burst transmit time in TDMA mode operation. Howver, it is anticipated that the postdelivery tests of the experimental model system will employ one or more light, low-speed aircraft as "RCVs". Therefore, a small specially-designed, manually-operable transmit time control unit incorporated in the GCS terminal can accommodate this function. Use of a simple office calculator, or manual computation, will accommodate determination of ranging accuracy. In this manner, procurement of a computer, and development of special-purpose software for it, can be avoided for the experimental model phase.

The experimental model terminal and test unit descriptions in the following topics of the section illustrate the experimental model designs adopted in consistency with this rationale.

KEY ASSUMPTIONS INFLUENCING RECOMMENDED EXPERIMENTAL MODEL DESIGN

- A single-channel MGSC modem will suffice for the experimental phase
- The physical construction of the eventual tactically-deployable configuration need not be duplicated
- Modem data sources and sinks can be effectively provided by inexpensive, specially designed test units
- Standard test equipment can be employed for most MGCS performance monitoring and measuring purposes.

EXPERIMENTAL MODEL SYSTEM CONFIGURATION

All of the essential performance characteristics of the eventual fully-compliant Master Ground Control Station (MGCS) and Remotely Controlled Vehicle (RCV) modems recommended in this report are incorporated in the experimental models configuration. Through use of the method of proof-by-logical-induction, demonstration of the modular expansion capability of the experimental modems will assure the proper operation of the eventual fully compliant GCS and RCV modems.

The primary difference between the capabilities of the experimental model modems (GCS and RCV) and the eventual, fully-compliant modems is one of capacity. The figure on the facing page shows a system configuration comparison. Except for not providing the capacity of the eventual, fully-compliant GCS modem, all significant characteristics will be demonstratable in the experimental model modems. Certain functions that would normally be externally supplied to the modem by the MGCS computer and the RCV data sources will be supplied to the modems by control panels, voice coordination, and human operators. These functions include data input, RCV link control commands, and ranging (but not position location).

The IF filtering and IF AGC functions will be supplied with the experimental model modems, while the RF sections are not supplied since it is understood that the Government will integrate these modems with RF equipments at a later date. The IF sections are considered to be critical to the proper operation of the modem, thereby dictating that the link-modem interface be at IF. Since all transmit and receive modem IFs are the same, the experimental model modems provide an IF interface for laboratory testing of the MGCS transmit-to-RCV receive and RCV transmit-to-MGCS receive links without need of any RF equipment. Thus all modem features may be tested without need of on-the-air tests.

The primary function of the voice coordination link between the master GCS and the Ground Slave Station (GSS) is to cross-tell such operational data as time-of-transmission assignments and advisories by the slave station that two Time Division Multiple Access (TDMA) mode receptions are about to overlap. Voice coordination between the GCS and the RCV operator is used as a convenience in conducting test data transmission. The RCV modem operates in a strictly hands-off mode independent of the RCV operator. The operator is required to monitor operation and insert test messages at prearranged times in the test sequence, if there is no voice coordination, or upon command of the MGCS operator if there is voice coordination.

Test panels should be supplied at both the GCS and RCV as part of the experimental modem delivery to facilitate data entry, control, and testing. Standard test equipment such as scopes, event counters, and voice coordination equipment as needed for complete testing need not be supplied by the contractor. More detailed characteristics of both the MGCS and the RCV experimental modems as well as the furnished test panels will be found in succeeding topics in this section.

The method of proof-by-logical-induction can be employed to demonstrate that the eventual, fully-compliant modem will operate as intended because the experimental modem operates successfully. A general illustration of proof by inducation is as follows. Show that the modems successfully operate at the lowest modular capacity capability. Then, if the modem's capacity can be increased by the modular amount and the modem successfully operates, there is no reason to believe the modem will not work successfully at full modular capacity. In this instance, it is proposed that it be shown that an RCV can be

commanded to operate in the Video and Telemetry (V&T) mode, then the Continuous Telemetry (CT) mode, and then the TDMA mode. Further, it can be shown that more than one RCV can be handled in the TDMA mode. Therefore, the eventual, fully-compliant ground station modem should be able to handle 25 RCVs in any combination of TDMA, V&T, and CT modes.

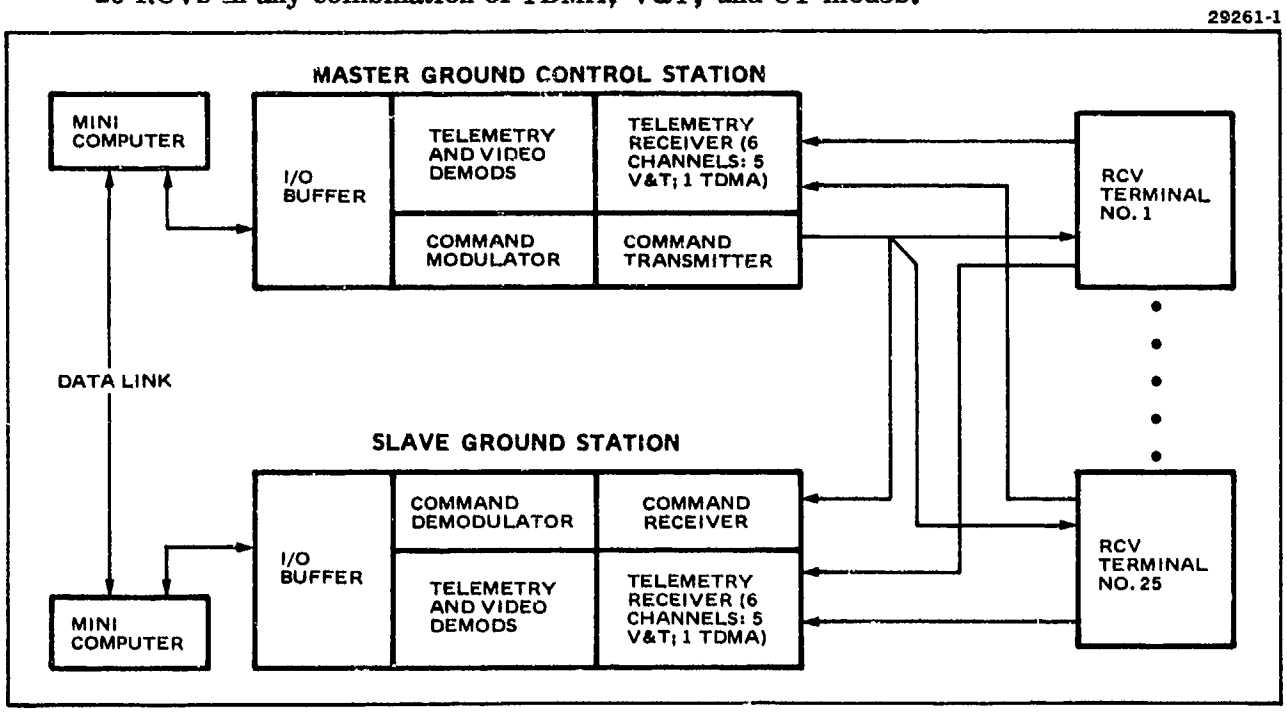

Figure A. WCCM System

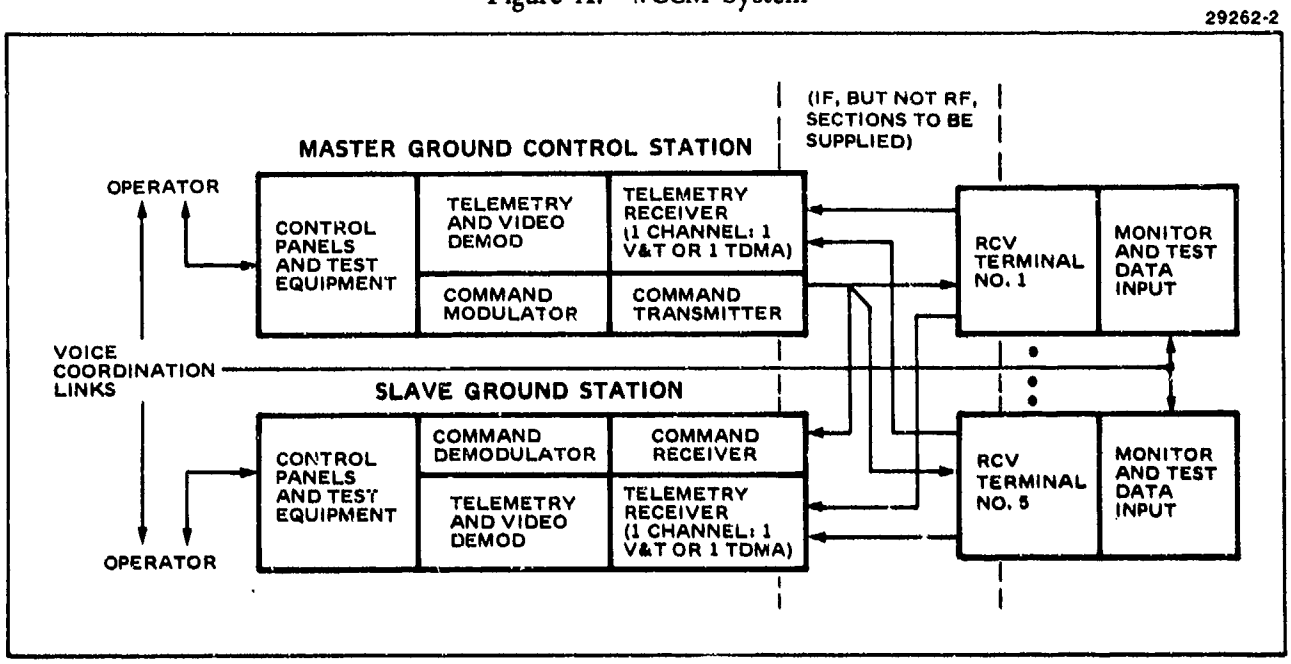

Figure B. WCCM Experimental Model System

The experimental model allows control and demonstration of all primary, eventual-modem characteristics; however, in the eventual, fully-compliant modems the routine operations are expected to be performed by computer control rather than by a human operator.

EXPERIMENTAL MODEL MASTER GROUND CONTROL STATION CONFIGURATION

The experimental model master ground control station consists of modules, functionally identical to those of the full-up ground terminal. The configuration is kept to the minimum required to demonstrate all of the essential features of the ground terminal modem.

The experimental model ground station consists basically of modem units that make up a reduced-capacity WCCM ground terminal capable of providing information exchange with up to 5 RCVs using one RF channel. The major difference between the experimental model ground station and the full-up system lies in the level of automation employed. Since the experimental set-up does not include a computer, certain control functions are accomplished by human interaction.

Referring to the facing figure, it can be seen that the experimental model modulator is identical to the ground station modulator assembly shown. Since RF equipment is external to the modem experimental models, no transmit RF assembly need be furnished. Similarly, on the receive side only, the IF portion of the Receive RF Assembly discussed in the next topic, can be provided without the optional notch filter. Since only one return link RF channel will be available for the test, one IF assembly and one channel demodulator and message decoder assembly (CDMDA) are incorporated. The CDMDA and timing and control modules (TCM) are functionally identical to the units of the fully compliant WCCM.

The experimental model master ground control station can be equipped with any number of TCMs up to a maximum of six, with five of the TCMs serving one RCV each. In order to verify that the modem can receive, demodulate, and time-separate up to 25 RCVs, a load simulator is incorporated. The load simulator operates in conjunction with its own TCM. The load simulator, functionally described in detail in a subsequent topic, provides the feature of feeding back segments of the transmit IF into the receiver IF, thus simulating the reception of messages from an arbitrary number of (up to 25) RCVs. The start time of each simulated RCV burst is manually selectable. The duration and repetition period of each simulated message segment equal the corresponding characteristics of an RCV originated message. The power level of the signal feedback through the load simulator is adjustable to simulate the effect of the near-far reception problem.

The transmit time assignment for the nonsimulated RCVs is inserted manually on the timing and control units. These units provide the means of manual operator control of functions normally originating in the ground station computer. Thus, for each TCM, there is one timing and control unit. The time assignment and mode selection, also performed on this unit, are entered into the associated TCM and into a link command message upon depression of the INITIATE button. The telemetry and video data rates are selected at the TCM and CDMDA respectively, with the same rates allowable as in the full-up system.

The time transfer unit of the ground control test unit is included to demonstrate the external PN pattern reset feature, which is useful for rapid code pattern acquisition and direct initial acquisition in the time division multiplex return link mode. The time transfer unit represents a functionally simplified version of the ranging and time transfer unit of the full-up system, in that the external reset is effected by manually connecting one TCM at the time to the

time transfer unit, and in that the range measurement can be accomplished using standard test equipment to measure time difference between modulator frame timing and the applicable TCM frame timing.

The receive message error comparator of the ground control test unit enables measurements of correctly and incorrectly received telemetry messages for evaluation of the efficiency of the error detection code, and of bit error rates during video transmissions. Outputs from the TCMs and the CDMDA permit measurement and recording of message error rates either on an individual RCV basis or on a composite basis. The busy-indicator output of the CDMDA readily permits display of all receive message times in the TDMA return link mode.

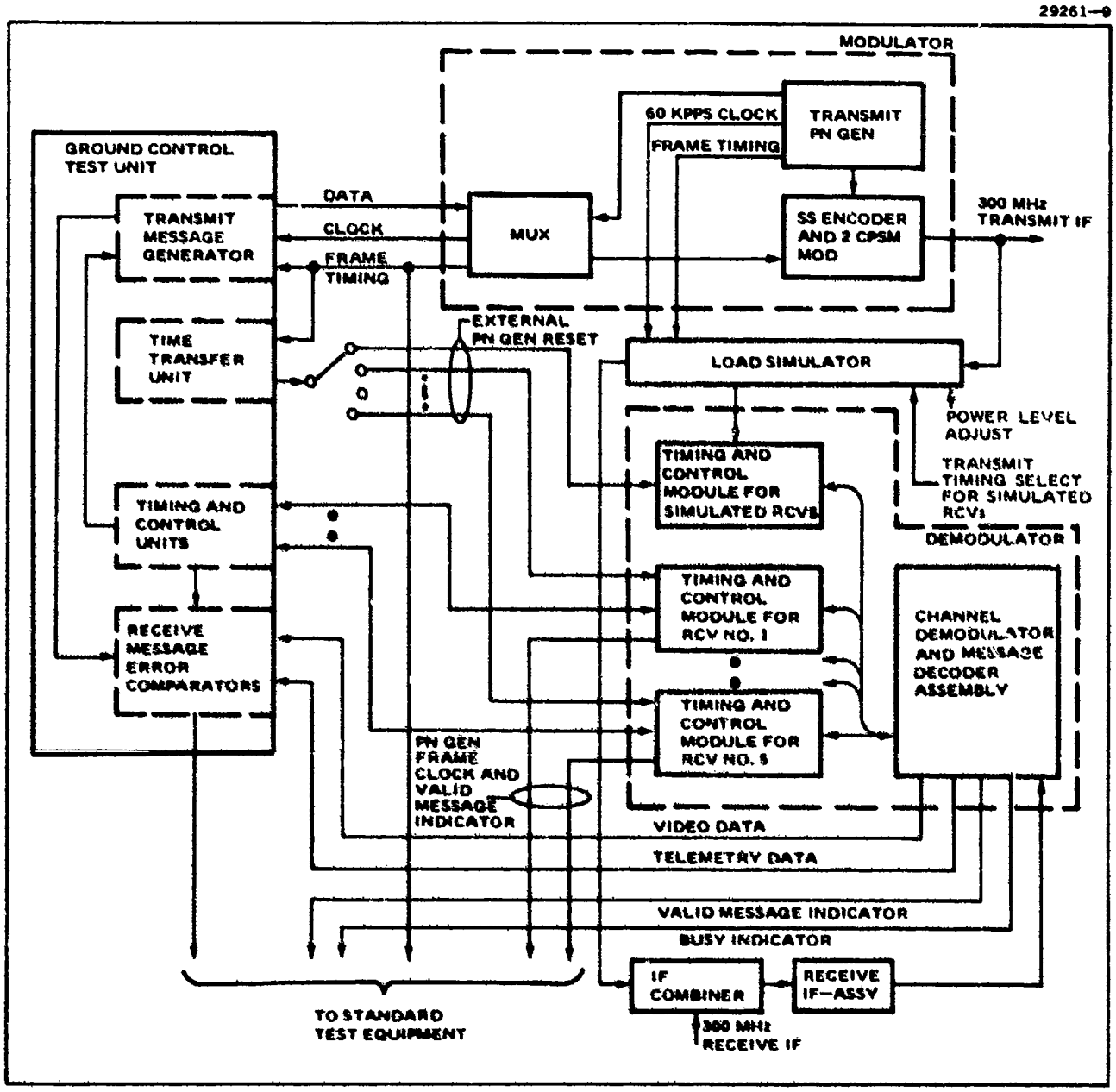

Experimental Model Master Ground Control Station. The experimental model master ground control modem is functionally identical to a reduced capacity terminal

EXPERIMENTAL MODEL RCV TERMINAL CONFIGURATION

The RCV experimental model terminal is functionally identical to the fully compliant modem configuration.

The experimental model RCV terminal functional capability is identical to that of the eventual, fully-compliant modems. Although format provisions (including storage of received link commands) would be incorporated to accommodate the link commands for antenna and frequency control, the external terminal hardware to accomplish these functions need not be provided. Figure A (opposite) is a block diagram of the RCV modem, showing both the equipments to be supplied and those not to be supplied as a part of the experimental model RCV terminal.

Figure B (opposite) shows the RF/IF split of assemblies to be supplied. The IF chip-matched filtering and IF fast gain control should be supplied as a part of the modem because they are critical to achieving maximum performance. The matched filtering maximizes the signal-to-noise ratio at a periodic series of points in time (chip durations) when the primary background is white, gaussian noise. The AGC function and its associated loop time constants are carefully matched to the thresholds of the analog-to-digital converter (A/D) in the 2 CPSM demodulator. The combination of the AGC and A/D provides soft limiting and provides the ECCM feature of minimizing the effectiveness of any burst or impulsive type of interference. The notch filters are optional items and need not be supplied with the experimental model.

The RCV terminal operates automatically; however control panels would be supplied to permit an RCV operator to monitor incoming traffic and to permit insertion of appropriate telemetry and video data as desired for testing. Automatic indication and counting of correctly/incorrectly accepted messages can be accomplished by the provided test panel; recording of these results (if desired) can be by standard test equipment.

Because the modem-link interface is at an IF, repeatable, laboratory demonstration (without RF equipment) of all modem characteristics, including near/far capability, is possible. Thus, the MGCS and RCV modems may be linked back-to-back to provide round-trip data collection.

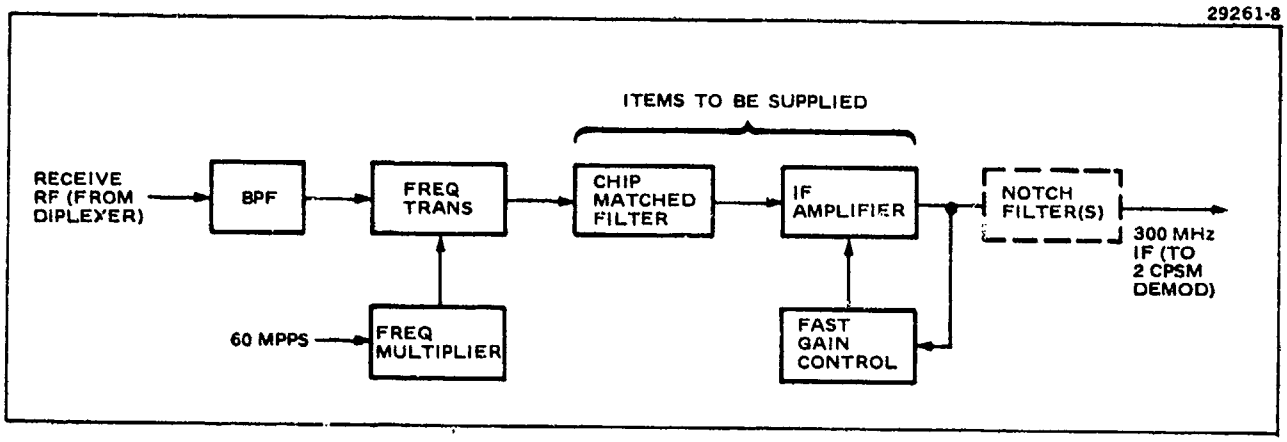

Figure B. RCV Receive RF Assembly. IF filtering and gain control are to be supplied because they are critical to the modem operation and performance demonstration.

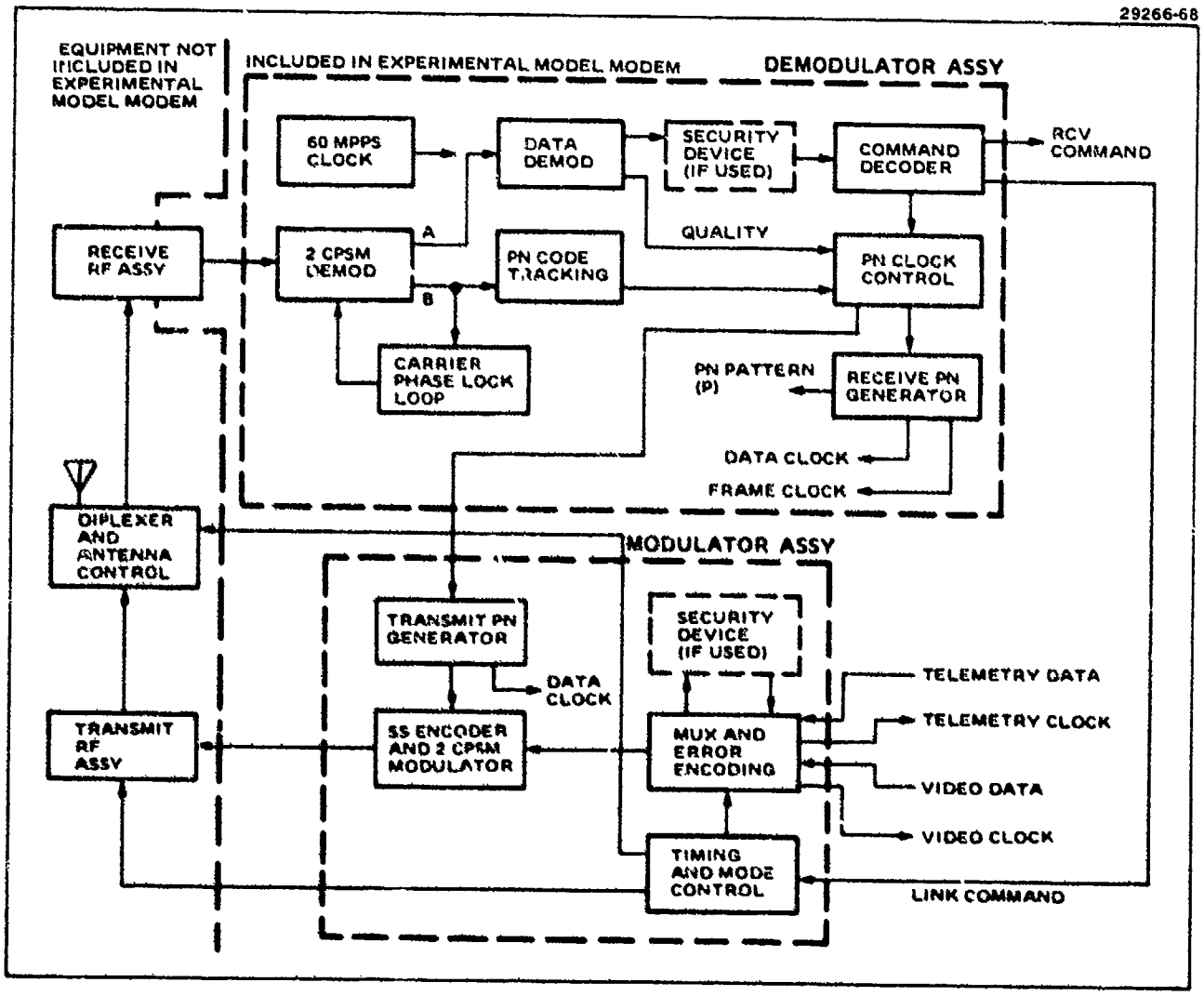

Figure A. RCV Modem Block Diagram. The experimental model modem will have functional capacity identical to the fully-compliant modem as described in the design plan.

EXPERIMENTAL MODEL GROUND SLAVE STATION CONFIGURATION

Inclusion of a Ground Slave Station (GSS) into the experimental test configuration is needed to verify the attainable accuracy of the proposed position location technique using trilateration. If a complete demonstration of the ability to obtain interference-free reception at two ground stations is to be demonstrated, using the transmit time reassignment concept, the test should include at least two operational RCV's in addition to the MGCS and GSS ground terminals.

The function of a slave station in the WCCM test configuration is to verify the position location determination concept using trilateration. The slave configuration employs a demodulator, which is functionally identical to the experimental-model master terminal. The key difference between the master and the slave station is that the latter contains no modulator, but includes a receiver section which is functionally identical to the RCV receiver portion. The demodulators of the two ground terminals are functionally identical. Clearly, since the slave station contains no transmitter, functions associated with the transmitter in the master station, such as the Load Simulator and Transmit Message Generator, are not included in the slave configuration.

In order to determine RCV position to within the 100-foot precision specified, the slave station must generate an accurate time measure that is relatable to the RCV location. Knowing the position of the slave station and the distance between the slave and the master terminals, one such measure is obtained by having the slave determine the difference in PN code timings between the master and the RCV transmitted messages as they appear at the location of the slave station. The difference can be recorded for subsequent position location verification. If real-time position location determination is desired, the voice coordination link can be used to convey the timing difference readings. However, dynamic position location capability will not be fully demonstratable, because a real-time data transfer link and computer would not be provided.

In order to derive a stable time base, relative to which RCV range measurements are made at the slave station, the slave terminal utilizes a receive channel, which is used solely for the purpose of continuous monitoring of the forward link transmissions that originate at the master station. In the experimental configuration, this channel would only be utilized to extract and tract master station PN code timing. In the full-up configuration, the slave station would also extract all link commands transmitted to the RCVs, thereby deriving RCV time and frequency assignments needed for meaningful demodulation and time separation. In the experimental configuration, the voice coordination link would be utilized to transmit pertinent assignment information between the master and the slave terminals.

The slave station test unit contains essentially the same control units as those recommended in the master station test unit, with the exception of the transmit message generator, which is not applicable to the slave station. Similarly, the performance monitoring features of the slave station are identical to those of the master station, and the same outputs for external recordings would be provided.

In addition to verification of the position location concept, the concept of commanding changes in time assignments to attain interference-free reception at two physically separated ground terminals would be demonstratable. This problem always appears in a TDMA system and can be inefficiently solved by allocating enough guard time between consecutive transmissions. The recommended approach, however, is not based on use of excessive guard time but rather on packing the transmissions fairly closely and readjusting the individual RCV

transmission time assignments when the need arises. A convincing demonstration of this approach requires more than one RCV terminal in addition to the MGCS and GSS terminals.

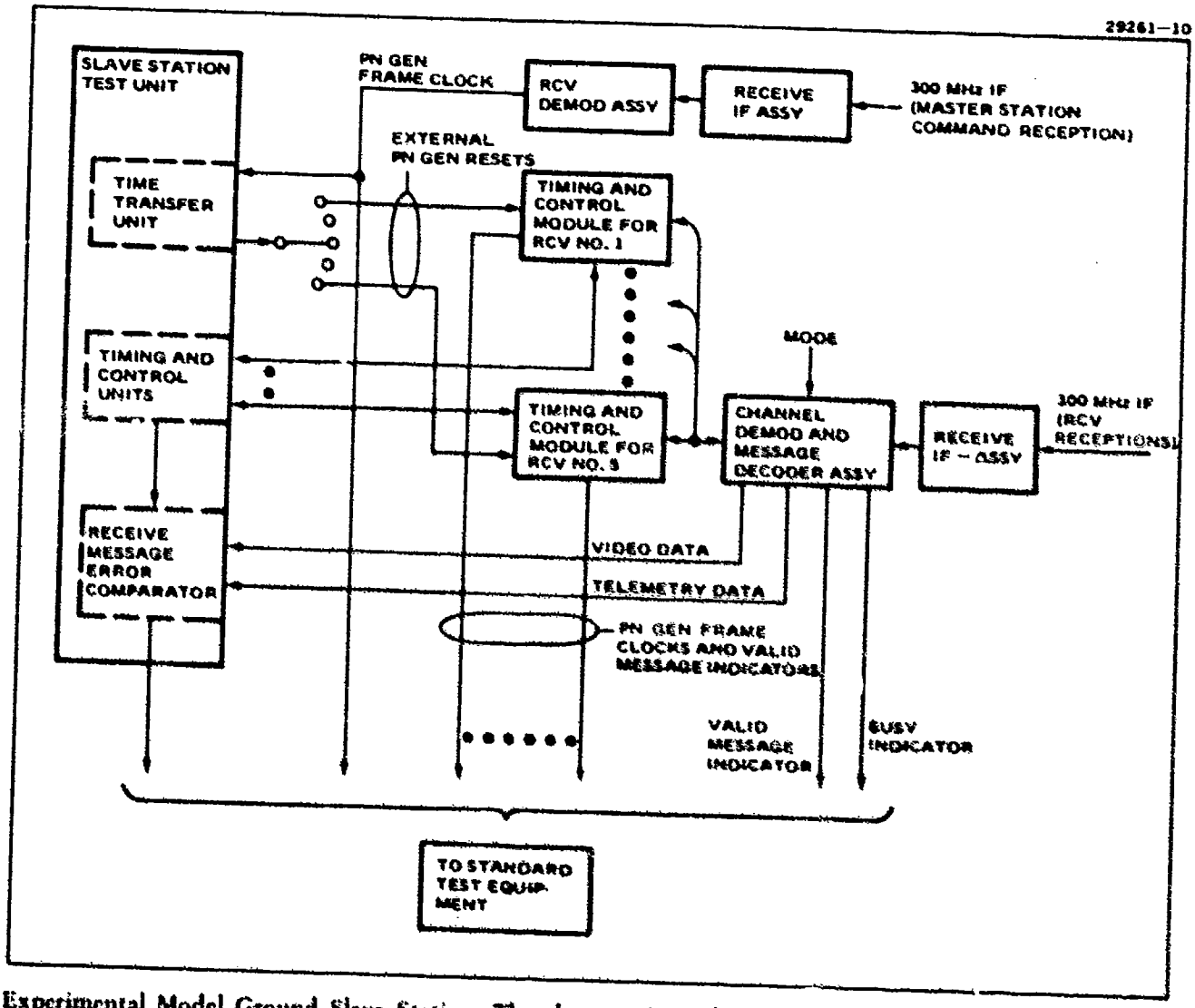

Experimental Model Ground Slave Station. The slave station, if included in the test configuration to permit demonstration of the RCV position location capability, employs an RCV Demodulator to derive an accurate reference for time measurements.

CAPABILITIES OF THE MASTER GROUND CONTROL STATION TEST UNIT

The MGCS Test Unit automatically generates 25 messages, each of which is addressed for a particular RCV terminal. Front panel test jacks are provided to permit monitoring of system functions with standard test equipment.

The primary functions of the MGCS Test Unit are the generation and formation of messages for transmission to all deployed RCV terminals and data error detection of messages received from each RCV.

The MGCS Test Unit (in conjunction with the MGCS modulator) formats 25 messages consisting of 80 bits per message during each frame interval. Each message is individually addressed with a 6-bit code and encoded with 10 parity bits for error decoding.

Two types of messages are formatted by the MGCS Test Unit: the RCV command data message and the link command message. RCV command data is generated in the MGCS Test Unit by a 64-bit shift register which accepts data from 64 selector switches located on the control panel (Figure A opposite).

Figure B is a functional block diagram of the MGCS Test Unit. RCV command data is continuously formatted by the message format control function during each message time slot except when link command is to be formatted for transmission. Link commands are generated and initiated by the individual Timing and Control Units (T&C). The link command from a T&C Unit is inputted to the format control function upon detection of its own address, and the link command message is transmitted in place of the RCV command data message.

The receiver portion of the MGCS Test Unit consists of a telemetry data comparator and a video data comparator. The telemetry data comparator tests the received telemetry data outputted by the Channel Demodulator Assembly of the MGCS modem against the 33 switch settings located on the MGCS Test Unit control panel. An invalid message output is detected when the locally generated pattern fails to compare with the modem data. The video data comparator tests the received video data outputted by the MGCS modem against a locally generated pattern. Comparison is performed on a bit-for-bit basis and an error pulse is outputted for each bit that fails to compare. At the ground station, flexibility in the type and quantity of items to be monitored and recorded is allowed through the use of nondeliverable standard test equipment. Normally one oscilloscope and one or more event counters will be desired for monitoring of the performance of the system.

29261-21

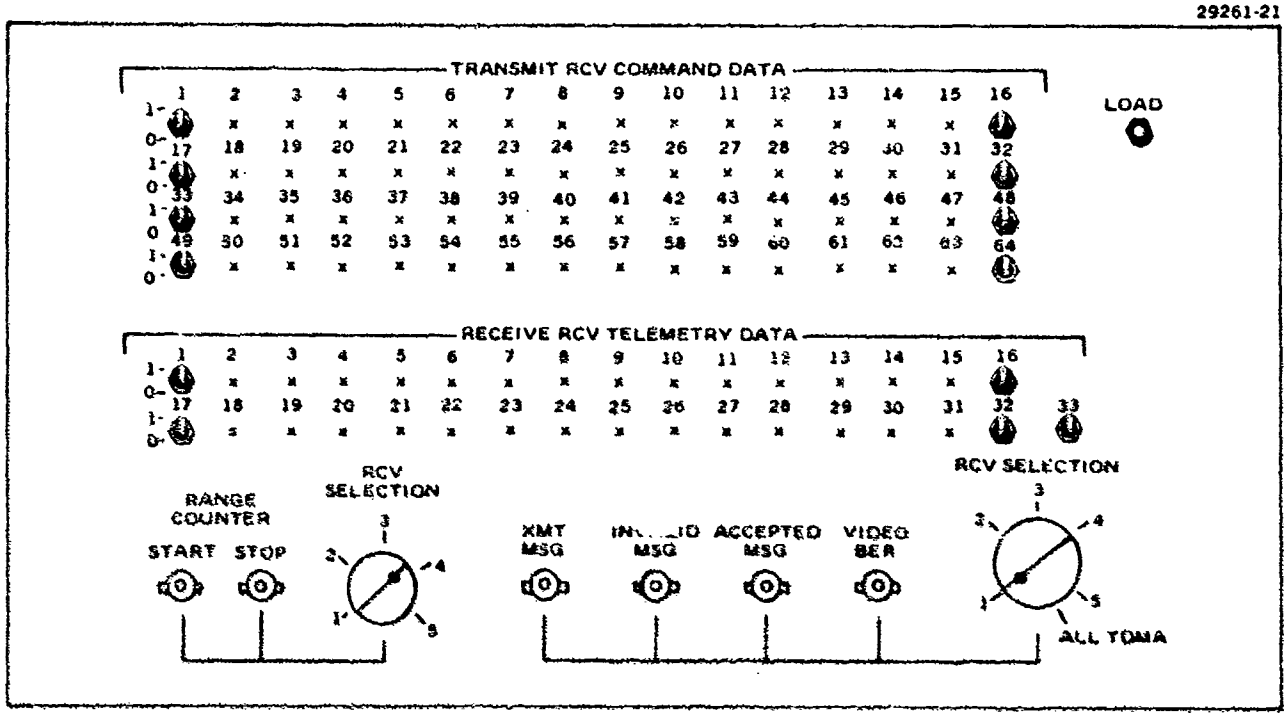

Figure A. MGCS Test Unit Control Panel. This test unit provides for generation of both link and RCV command messages as well as detecting errors on return link messages.

29261-20

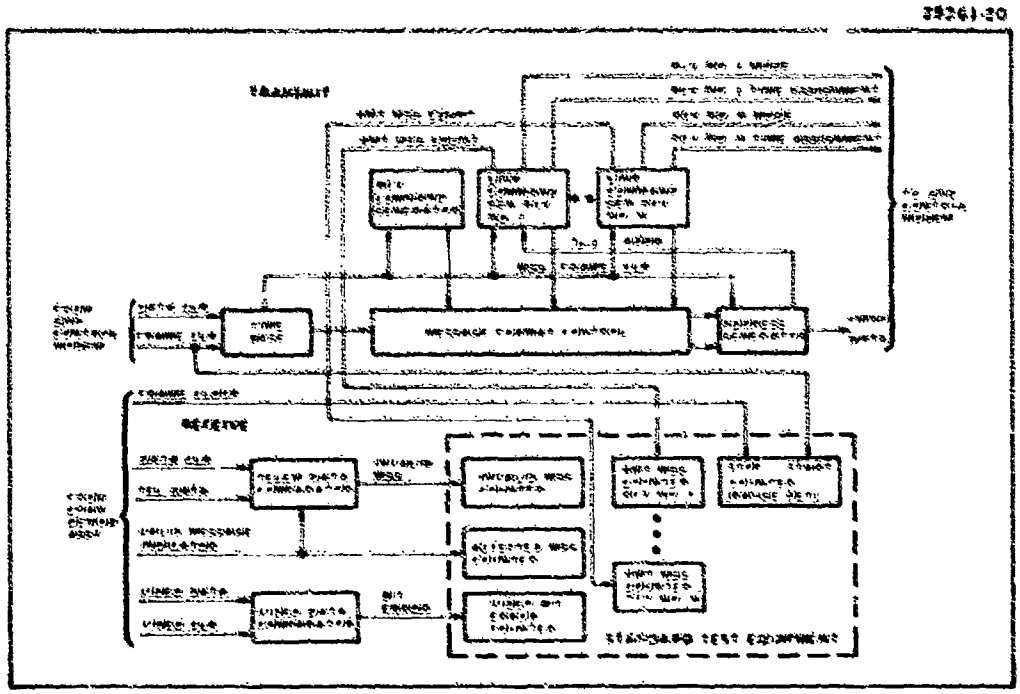

Figure B. Functional Block Diagram of MGCS Test Unit. Each message is individually addressed with a 6-bit code and encoded with 10 parity bit for error decoding.

CAPABILITIES OF THE RCV TEST UNIT

The experimental RCV terminal includes a built-in test capability to generate simulated telemetry and video data for transmission by the RCV and to monitor received command messages for accepted, invalid, and rejected messages.

The RCV Test Unit is provided as part of each experimental RCV terminal to simulate the RCV telemetry and video data input to the modem and to monitor all received command messages for quality. The RCV Test Unit Control Panel, which is mounted to the front of the RCV terminal pallet assembly, is shown on the facing page (Figure A). A Functional Block Diagram of the RCV Test Unit is also shown (Figure B).

In the transmit portion, the RCV Test Unit provides 33 telemetry data selector switches to allow the manual insertion of the 33 telemetry bits contained in each burst transmission. A load button is provided to allow parallel loading of the 33-bit word into a 33-bit circulating shift register. The modem provides 33 gated 60 Kpps data clocks to the register to shift out the telemetry bits for transmission by the modem. To change the content of the register, the switches must be set to the selected positions and the load button again depressed. As long as the load button is not depressed, each transmission will contain the same 33-bit word.

Simulated video data is provided by a maximal length pattern generator which provides a 127-bit test pattern. A 20 Mpps gated video clock is provided by the modem to shift out the RCV video data.

The receive portion of the RCV Test Unit provides a set of 64 command data selector switches and a 64-bit comparator and shift register. The RCV command data is shifted into the 64-bit shift register and is compared with the 64 switch settings. If any one of the bits fails to compare with the selector switch settings, a gate is set and the Invalid Message Counter advances one count. This indicates that the modem accepted the command message and failed to detect a bit error present in the message.

Accepted messages are counted and displayed on the Accepted Message Counter. Rejected messages are those that were determined by the modem to contain parity errors or were below a preset quality threshold. Rejected messages are counted and accumulated by the Rejected Message Counter.

The Invalid Message Counter, Rejected Message Counter, and Accepted Message Counter are mounted on the RCV Test Unit and are implemented with seven-segment light-emitting diode displays. Three plug-in circuit cards (located in the RCV modem enclosure) contain all the logic circuits for the RCV Test Unit.

29261-22

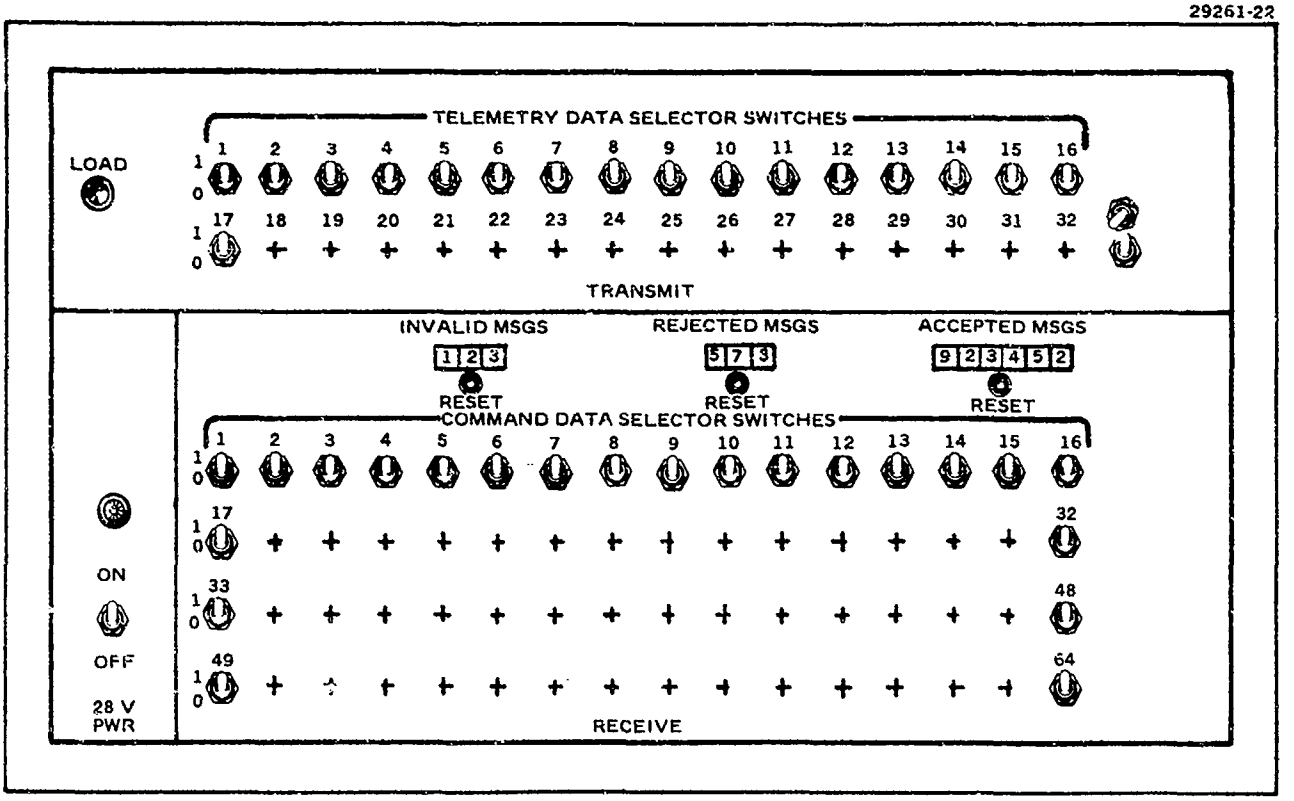

Figure A. RCV Test Unit Control Panel. The test unit allows both generation of test data for return link performance measure and monitoring of forward link data performance in a self-contained unit.

29261-23

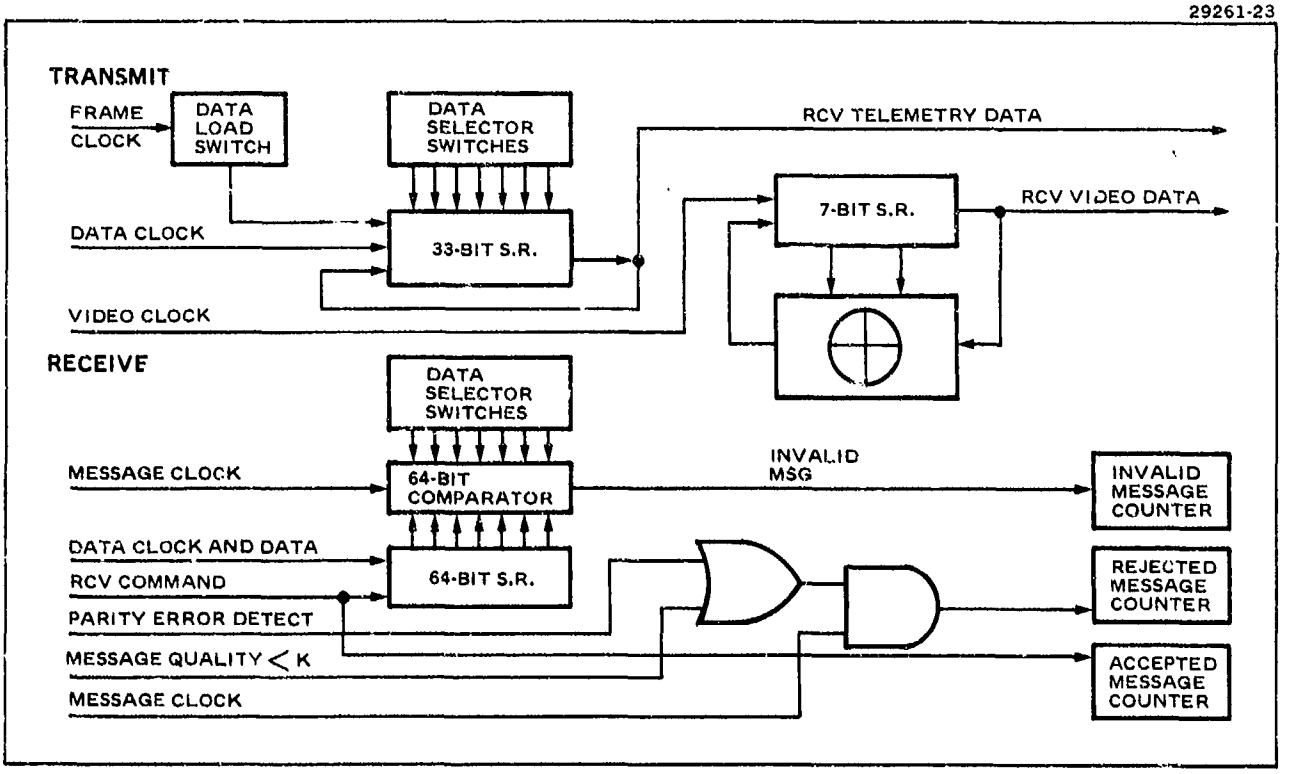

Figure B. Functional Block Diagram of the RCV Test Unit. Three plug-in circuit cards (located in the RCV modem enclosure) contain all the logic circuits for the RCV Test Unit.

CAPABILITIES OF THE LOAD SIMULATOR

The load simulator, in combination with an associated additional Timing and Control Module for the simulated RCVs, allows demonstration of IF, signal processing, and control circuit loading characteristics. The simulator can readily provide more than the required 24 simulated loads to permit demonstration of the system's adaption to the near-far problem.

The load simulator integrated into the MGCS terminal can provide an excellent test and demonstration capability. In system (TDMA channel) operation at full capacity, potential difficulty could arise due to co-channel interference at either the IF or baseband demodulator circuits. Additionally, difficulty could result from contention for control of time-shared signal processing circuits. The load simulator provides the ability to demonstrate the method of solution to all of these potential difficulties.

The approach, as shown in the facing diagram, interfaces with the MGCS in four places. First it obtains stable frame and data clock timing references from the transmit PN generator in the modulator. Second, the start timing of each of the simulated bursts is transferred to a Timing and Control Module and is used by that module to attempt demodulation of an incoming burst message. By this means, any conflict in time sharing of the demodulator circuits between the simulated bursts and a real RCV burst will become apparent. Third, the simulated IF signals are generated by tapping off a small amount of energy from the transmit IF. With this approach the simulated IF bursts have the same type of modulation and bandwidth as the real RCV bursts. Fourth, the simulated IF bursts are bridged into the receive IF prior to the matched filtering and automatic gain control.

The quantity and timing of the simulated bursts are established by use of the load selection switches. The start timing of a burst can be placed in any of 100 possible positions by the setting of a toggle switch. For a burst length of 370 microseconds (full capacity TDMA case), as many as 33 non-overlapping simulated bursts could be generated; but this would allow no time gap large enough for receipt of a real RCV burst. However the generation of up to 24 simulated bursts with varied guard times and receipt of one real RCV burst is very practical.

The length of the simulated bursts can be changed to correspond to a change in data rate. Also, the IF level of the bursts can be increased or decreased by use of a switched attenuator. By level variation the simulated bursts can appear to be either stronger (nearer) or weaker (farther away) than any real RCV bursts.

Since the associated Timing and Control Module can be set to the same PN pattern as the transmit PN generator, it will have the capability to acquire and demodulate the simulated signals. However, unless the forward link data rate and data message content are set to match an allowable return link format, the demodulated message will be rejected as invalid.

29261-28

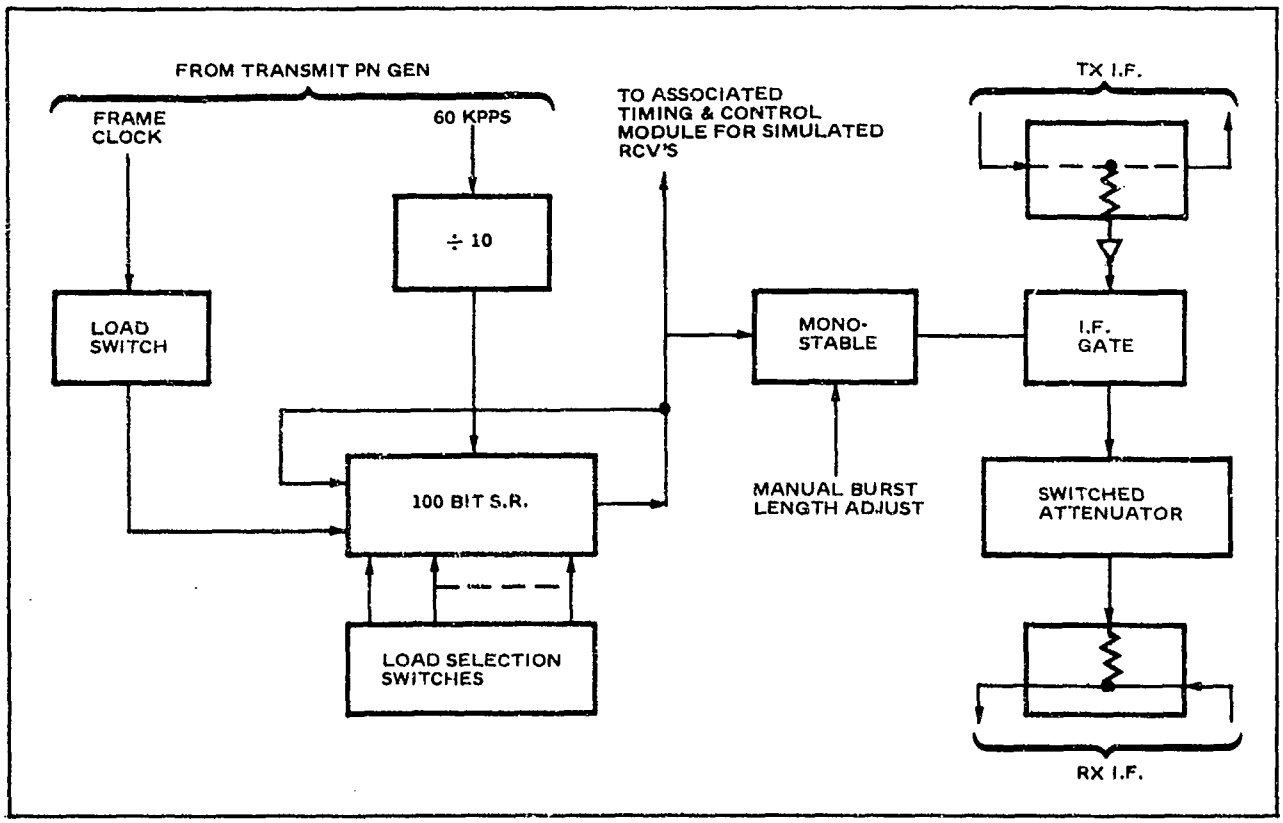

WCCM Load Simulator Functional Block Diagram. By allowing selection of burst start times, quantity of bursts, length of bursts, and IF level, the simulator can be used to demonstrate all useful test loading conditions.

PHYSICAL CONFIGURATION OF THE GROUND STATION TERMINALS

All elements of the experimental Master Ground Control Station (MGCS) required to accommodate simultaneous control and Time Division Multiple Access (TDMA) or video/telemetry reception of up to five RCV stations are configured into a single standard 19-inch rack.

The Master Ground Control Station (MGCS) experimental model is enclosed in a standard 19-inch by 72-inch equipment rack. The physical layout of the MGCS is shown on the facing page. All electronics are located on plug-in cards or plug-in test modules which are accessible from the front of the rack for ease of maintenance and configuration changes. The following listed equipments comprise the MGCS.

- Load Simulator – Control panel and three plug-in PC cards.
- Timing Transfer Unit – Plug-in control module with two self-contained PC cards.
- GCS Control and Display – Control panel and two plug-in PC cards.
- Timing and Control Units – Each timing and control unit is comprised of a plug-in control module with two self-contained PC cards. The rack is wired to accommodate up to six side-by-side-mounted timing and control units. The number of timing and control units is determined by the number of RCV terminals to be controlled.
- Timing and Control Electronics – The timing and control electronics card cage assembly is prewired to accommodate electronic circuit cards for control of up to five RCV terminals. Four plug-in PC cards are required for each RCV terminal under control of the MGCS.
- Basic Modem Electronics – The basic modem electronics are located in a card cage assembly below the timing and control units. This card cage assembly includes the transmit and receive IF circuits, a 2 CPSM modulator, a 2 CPSM demodulator, and basic modem logic that is common to all RCV terminals under control of the MGCS. A total of 16 plug-in PC cards are required for these functions.
- Power Control – Primary power controls and indicators are located on the power control panel. The power supplies which provide regulated dc power to all MGCS electronic circuits are located behind the power control panel and are accessible from the front of the rack.
- Blower Assembly – The blower assembly provides forced-air cooling which is channeled through the electronic card cage assemblies and exhausted at the top rear of the rack assembly.

The Ground Slave Station (GSS) is similar in design and construction to the MGCS and requires a single standard 19-inch by 72-inch equipment rack. The primary difference in the Slave Ground Station is the deletion of the load simulator and command modulator circuits and the addition of the RCV terminal receiver and demodulator circuits.

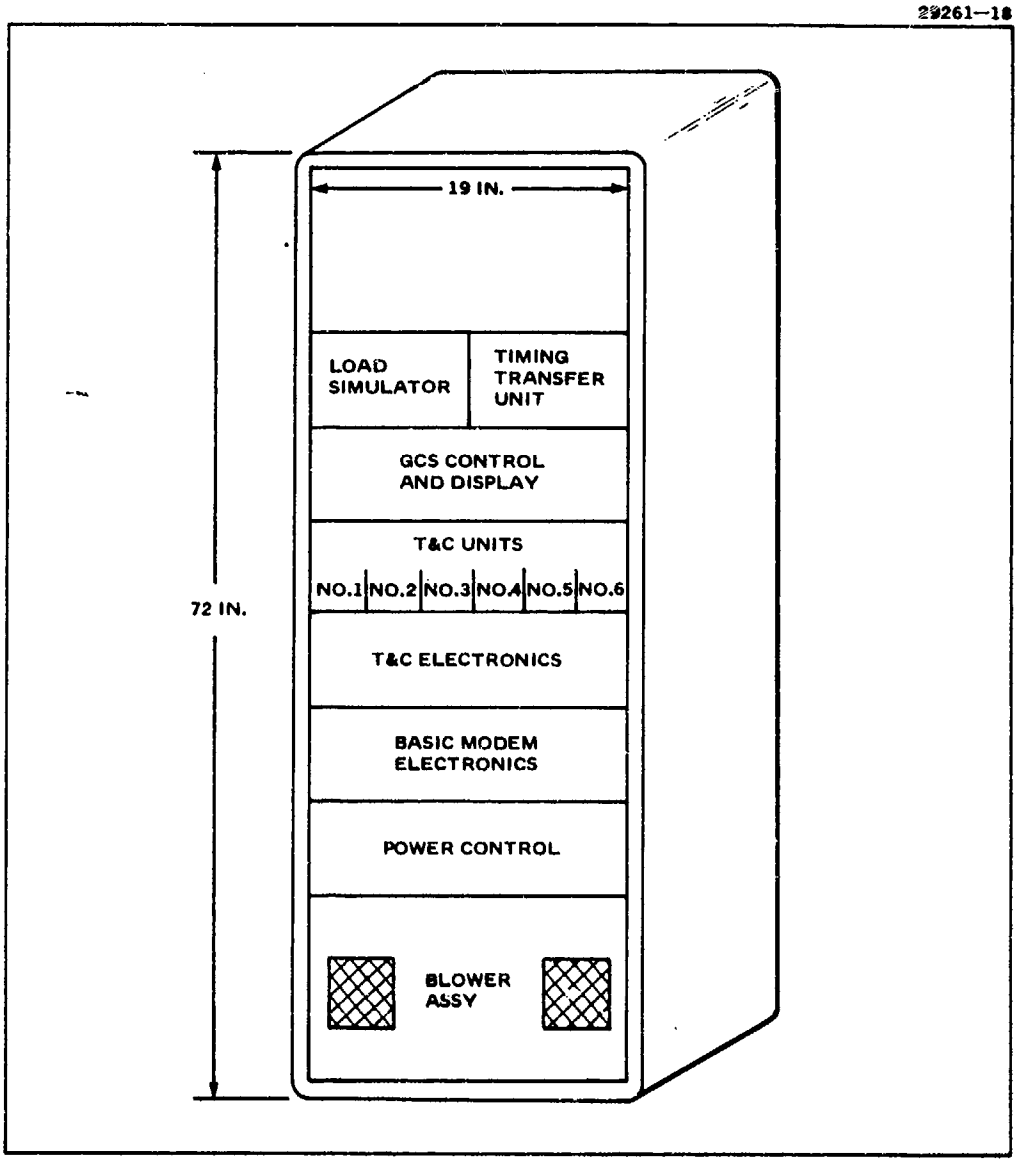

Physical Configuration of Experimental Model Master Ground Control Station Terminal. All electronics are modular and easily accessible from the front of the rack

DESCRIPTION OF GROUND CONTROL STATION MODULAR CONTROL UNITS

The experimental model Ground Control Station is designed to accommodate modular plug-in Test and Control units for control of RCV terminals. Each Test and Control Unit includes self contained electronic circuits.

Timing and Control Unit – Link commands to each deployed RCV station are generated by the Timing and Control Unit (T&C) shown on the facing page. All T&C units are identical in design and their physical position in the MGCS determines the RCV station to be controlled. The information content included in the manually selected link commands are the operating mode, transmit PN timing lock/unlock command, and the transmit time assignment position. The mode selection includes Time Division Multiple Access (TDMA), Video and Telemetry (V&T) and the Continuous Telemetry (CT) modes. The TDMA mode commands the RCV to transmit status/telemetry data in a burst mode during the specific time assignment position.

Selection of a V&T or CT mode allows the RCV to respond in the continuous transmission mode. In the V&T mode, video data at 20 Mbps and status/telemetry data at 2400 bps are multiplexed and transmitted on the return link. Selection of the CT mode allows only status/telemetry data at 2400 bps to be transmitted by the RCV.

Normally the RCV transmit PN generator remains locked to the receive PN generator but during loss of receive PN code synchronization, RCV modem circuitry automatically unlocks the transmit PN generator before going into the search mode. An Unlock command can also be initiated from the MGCS through the TX PN Generator switch. The command to relock the transmit PN generator to allow range measurement can be initiated only through the TX PN Generator switch. The unlock status indicator is illuminated when the RCV initiates a search mode or when a manual Unlock command is initiated. The indicator is extinguished upon initiation of a Lock command.

RCV transmit time assignment during the TDMA mode is inputted through the three thumbwheel Time Assignment switches. The Time Assignment switches provide for time position adjustment over a half-frame interval of 16.67 ms (1000 bit periods) in increments of 16.67 μs (approximately 2.5 nmi).

Transmission of link command data is initiated by depressing the initiate push-button switch which also illuminates the Acknowledge indicator. The indicator remains illuminated until a valid message indication is received from the commanded RCV.

Three status indicators from the MGCS Timing and Control Module are located on the T&C Unit. These indicators provide visual indication of track, search, and alarm status of the Timing and Control Module associated with the RCV.

Two BNC connectors labeled Reset and Monitor are used for ranging time-difference measurements. The Reset and Monitor connections provide output to the Timing Transfer Unit and an external counter or oscilloscope, respectively.

Timing Transfer Unit – The Timing Transfer Unit, shown in Figure B is used to align the PN generator in each T&C Unit to be in expected coincidence with the receive PN code from the RCV. Three switches on the face of the unit provide a variable delay setting in increments of 8.33 μs (range of approximately 1.4 nmi) to the reference frame clock of each T&C Unit. This function, which would normally be performed under control of a GCS computer enables RCV range information to be provided to the Timing and Control Electronics to reduce search time for PN code acquisition and tracking. The Timing Transfer

Unit allows rapid initial acquisition of an RCV as long as the RCVs range is known within a few miles.

29261-25

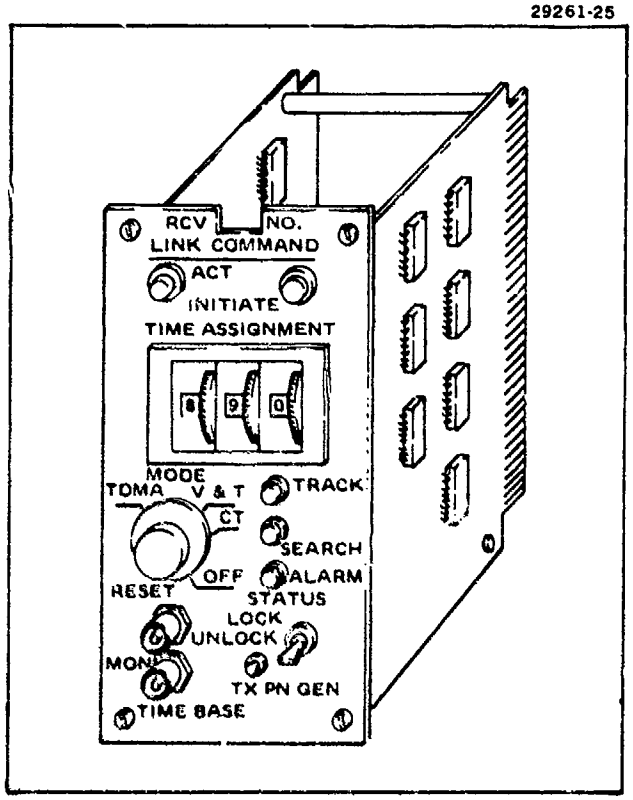

Figure A. Timing and Control Unit. All timing and control units are identical; their physical position in the MGCS determines which RCV station will be controlled.

29261-26

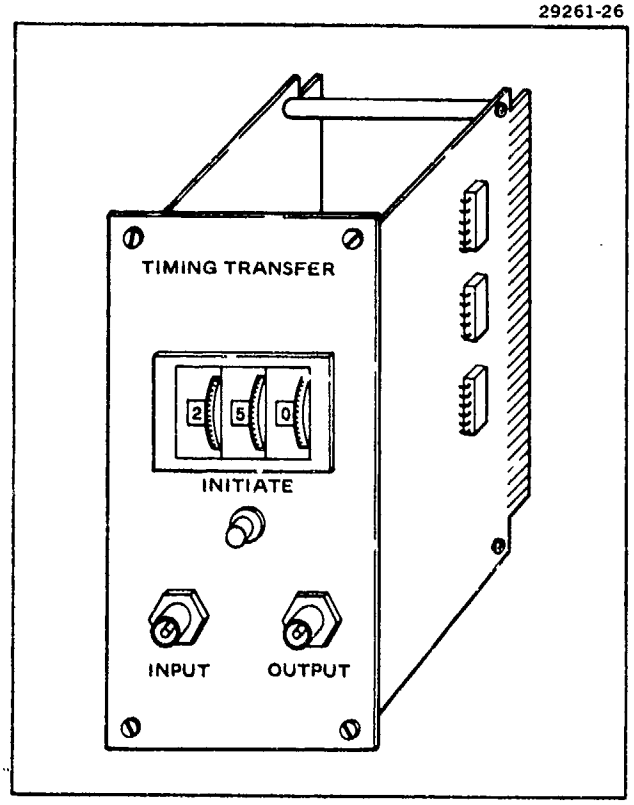

Figure B. Timing Transfer Unit. This unit is used to align the PN generator in a timing and control unit in coincidence with the received PN code from the RCV.

PHYSICAL CONFIGURATION OF EXPERIMENTAL RCV TERMINAL

A palletized, airborne RCV package using a previously developed and environmentally tested equipment enclosure can assure reliable airborne operation of the RCV Modem and minimize experimental modem development cost.

The figure on the facing page illustrates the recommended packaging and mounting provision for the experimental RCV Modem. All airborne equipment is installed on a 20-by-20-inch shock-mounted pallet which provides shock and vibration isolation for the electronic circuits. The modem is packaged into a 3/4 ATR short enclosure developed on a previous program involving airborne tests of an experimental communications data link. Airborne crash safety-compliance was previously demonstrated with such an enclosure. The dimensions of the RCV Modem enclosure are approximately 7.6 by 7.6 by 12.5 inches. A blower is installed at one end of the enclosure to assure adequate cooling for the 42-watt modem load. The enclosure contains a card cage assembly which retains the eighteen plug-in PC cards required for the experimental modem circuits and control circuits.

Two modular power supplies are provided, external to the modem enclosure, to convert the +28 VDC prime power input to the +5 VDC and ±15 VDC required for operation of the modem and control circuits. The power supply modules are designed to meet the expected airborne environment. The pallet provides the necessary heat-sink surface area for dissipation of the power supply heat.

A control panel is mounted to the front of the pallet assembly and contains all necessary control and message generation switches. Three of the 18 circuit cards in the modem card cage assembly provide the necessary logic control circuits. The junction panel located at the rear of the pallet assembly contains the input/output IF connectors and prime power connector.

Utilization of this packaging approach for the experimental airborne RCV Modem and controls minimizes the cost of development and assures a unit which will meet the airborne environment requirements. The total package weighs approximately 30 pounds and requires a total of 70 watts of prime power.

29261—38

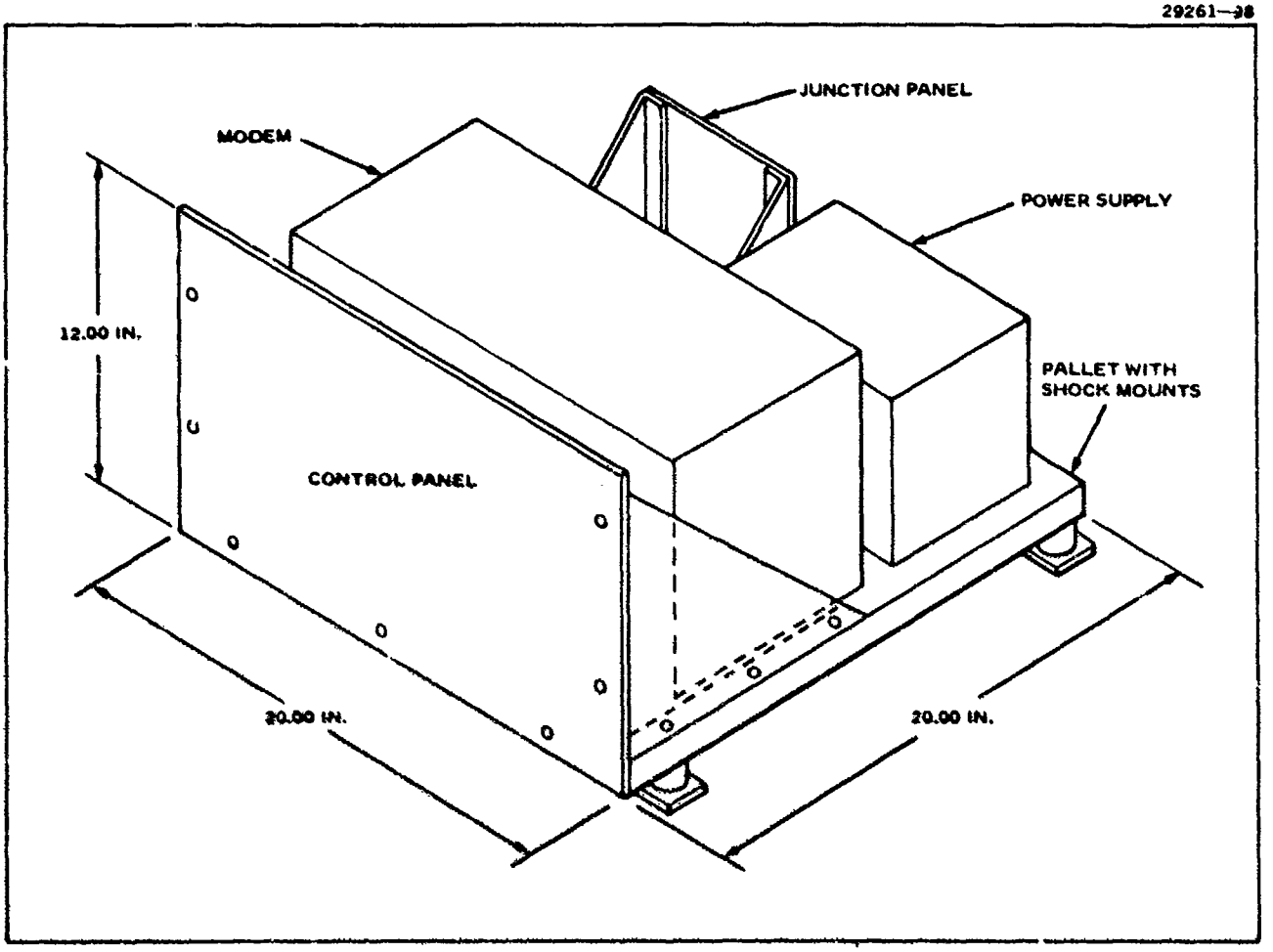

Physical Configuration of Experimental Model RCV Modem. Providing shock and vibration isolation and adequate cooling for the circuits, this model minimizes the cost of development and meets the airborne environment requirements.

RECOMMENDED FREQUENCY BAND

The C-band (5 to 5.5 GHz) is recommended for the experimental system because it provides adequate link margins with nominal equipment cost.

To test and demonstrate the WCC demonstration system over an RF link, two RF channels are required. One channel is for command and control signals (forward link) from the mission control facility (master station) to the RPVs. The second channel is for telemetry signals or for multiplexed telemetry and video signals from the RCV to both the master station and the slave station. This channel when used for telemetry is time-division-multiplexed for up to 25 RCVs with each RCV operating in a burst mode. (One-half ms transmit for each 33-ms period.) When the channel is operated in the telemetry and video mode, transmission is continuous. The complement of functional RF equipment in each facility to implement an experimental model system is tabulated as follows:

- Master Station
  - 1 Command + Control Transmitter
  - 1 Telemetry Receiver
- Slave Station
  - 1 Command & Control Receiver
  - 1 Telemetry Receiver
- RPV
  - 1 Command and Control Receiver
  - 1 Telemetry Transmitter

The equipment for link functional requirements in the three facilities is similar, and identical components can will be used in the design of the equipments.

The C-band is recommended for the demonstration program because components are readily available for this band and will permit conducting the demonstration program with minimum equipment cost. The use of the C-band also permits operating the system with inexpensive omnidirectional antennas on the RCV. A frequency of approximately 5 GHz has been selected for the return link and one of approximately 5.5 GHz for the forward link.

The following tables show the RF power budget for the different channels. The video channel has the least margin--the reason for selecting the lower frequency for the return-link channels.

All receivers and transmitters interface with the WCCM at an IF of 300 MHZ. The transmitter input power level is at a nominal 0 dBm. The overall phase characteristic from the transmitter ~~input at 300 MHz to~~ the receive output at 300 MHz must not depart from linear by more than $\pm 15^{\circ}$.

TABLE I. EXPERIMENTAL MODEL FORWARD-LINK POWER BUDGET

Transmitter Output Power (100 W)	+ 50 dBm
Transmitter-to-Antenna Feed Losses	- 2 dB
Ground Antenna Gain	+ 6 dB
—Transmitted ERP	+ 54 dBm
Path Loss (5 GHz, 80 nmi, Free Space + Vapor)	-151 dB
—Received Power at Omni Antenna	- 97 dBm
RCV Antenna Gain	+ 6 dB
Antenna Feed to Receiver Losses	- 2 dB
Length of a Bit (833 Chips at 60M Chip/sec Rate)	- 49 dB sec
• Received Energy per Bit, Eb	-142 dBmW-sec
• Noise Density (N_0 = KT + 9 dBNF)	-165 dBmW Hz
• Required E_b/N_0 for 10^{-5} BER	+ 11 dB
• Margin = -142 —(-165) -11	+ 12 dB

TABLE II. EXPERIMENTAL MODEL VIDEO POWER BUDGET

Transmitter Output Power (100 W)	+ 50 dBm
Transmitter-to-Antenna Feed Losses	- 2 dB
RCV Antenna Gain	+ 6 dB
—Transmitted ERP	+ 54 dBm
Path Loss (5 GHz, 80 nmi, Free Space + Vapor)	- 151 dB
—Received Power at Omni Antenna	- 97 dBm
Ground Antenna Gain	+ 20 dB
Antenna Feed to Receiver Losses	- 2 dB
Length of a Bit (2 Chips at 60 M Chips/sec Rate)	- 75 dBsec
• Received Energy per Bit, E_b	-154 dBmW-sec
• Noise Density, (N_0 = KT + 9 dBNF)	-165 dBmW/Hz
• Required E_b/N_0 for 10^{-3} BER	+ 8 dB
• Margin = -154 - (-165) -8	+ 3 db

TABLE III. EXPERIMENTAL MODEL RETURN TELEMETRY LINK MARGINS

• TDMA Mode C (Burst Telemetry) (14 dB more net antenna gain than forward link) (3 dB Less Time per Bit)	Margin = +23 dB
• V & T Mode (Continuous Telemetry + Video) (10 times more energy than TDMA mode since 50 times the energy is used for this mode, but only 1/5 of that is used for telemetry)	Margin = +33 dB
• CT Mode (Continuous Telemetry) (5 times more energy than V&T mode since video energy is used for telemetry)	Margin = +40 dB

PRELIMINARY DESIGN OF RF EQUIPMENT

Preliminary design effort provides an RF equipment configuration which can be implemented with readily available commercial components.

Figure A shows a block diagram of the RF equipment for an RCV experimental model system which is the result of a preliminary design effort. The equipment consists of a command and control receiver and a telemetry transmitter which are frequency-diplexed to operate from a single antenna.

The primary function of a transmitter filter is to prevent transmitter noise in the receive band from appearing on the receive side of the diplexer; whereas on the receive side of the diplexer the purpose is to prevent the transmit signal from driving the receiver into a nonlinear operation region.

The transmitter filter requires rejection of 70 dB in the receive band. The transmitter noise in the receiver band is rejected to a level which is approximately 20 dB below the receiver noise. The receiver filter requires a rejection of 70 dB in the transmit band. Assuming that the full transmitter power is in the carrier, the rejection will reduce the transmitter carrier to a level of approximately -42 dBm at the mixer input--which is well below the nonlinear level of this mixer. The chip-match filter in the modem will further reject this signal to a level below the minimum received signal level. One relationship which must be avoided in the frequency allocations is a separation of 2 times IF (300 MHz) since it would place the transmitter at the receiver image frequency and would force the total filtering to be accomplished by the receiver input filter. The chip-match filter will not help for an image frequency since the image frequency is within the bandpass of this filter.

To meet the link budgets which are presented in the preceding topic, a power amplifier with 100 watts (≈50 dBm) of output power is required. TWT amplifiers, which are packaged with their own power supply, are a viable candidate for this function. Units are available which have a saturated power output of 100 watts. A pulse on-off control is required for the power amplifier to turn the amplifier on only during the burst transmission period when this channel is operating in the telemetry modem. The rise and fall time of this control is not critical and can be as great as 2 ms.

The TWT input bandpass filter is used to reject undesired mixer products. Since the TWT is a wideband amplifier, any undesired signal will only subtract from the power in the desired signal. The closest mixer product is 600 MHz from the desired signal and rejection of 20 dB (1 percent of power) is adequate.

The transmitter design utilizes a high power up-converter to produce a minimum of +20 dBm of output power, to drive the high power TWTA without adding additional stages of gain in the transmit signal path. This level will be accomplished by using a varactor type of up-converter which provides conversion gain. Unfortunately, in order to achieve gain in this type of device, a high-power pump source in the local oscillator path is required. For example, producing a +27 dBm of output signal requires a +32 dBm pump and a +20 dBm 300 MHz input signal. The trade-off accomplished here is to remove an additional high-gain (30 dB), low-reliability--and expensive--microwave amplifier from the post-converter position and replace it with a high-power pump source and a 300-MHz solid state type amplifier.

For this equipment design, phase-locked microwave signal sources are used to produce the local oscillator signals required for the high-power up-converter (transmitter and the low-power down-converter receiver). The units employed for the down-converter and the up-converter are functionally similar.

The high-power unit, however, will have to have an additional high-power (+32 dBm) output stage. The use of a phase-locked, high-frequency, fundamental oscillator type of source allows exceptional performance to be achieved without the use of critical high-frequency circuits. RF isolation between phase lock element and the clock source eliminates the interaction problem associated with tandem multiplier chains. In terms of flexibility, the unit can be phase-locked to virtually any frequency source. However, the phase lock range is limited; consequently only a limited number of transmit or receive bands can be accommodated without returning the unit to a new lock band center.

In the design, a doubly balanced mixer will be used to down-convert the incoming low-level microwave signals to 300 MHz. This double-balanced type of mixer will be employed since its performance exceeds in this task what is achievable by other types, such as single-ended mixers or single-balanced mixers. Proper selection will permit use of the identical design in both the airborne receive and ground receive systems. Functionally, these units are well described in terms of noise figure, dynamic range, distortion characteristics, and local oscillator power requirements, thereby permitting an easy task in system design trade-offs. In order to achieve an output well isolated from input variations and to provide IF amplifications, a converter-amplifier is to be used. With reference to the mixer input, the receiver will have a noise figure of 9 dB.

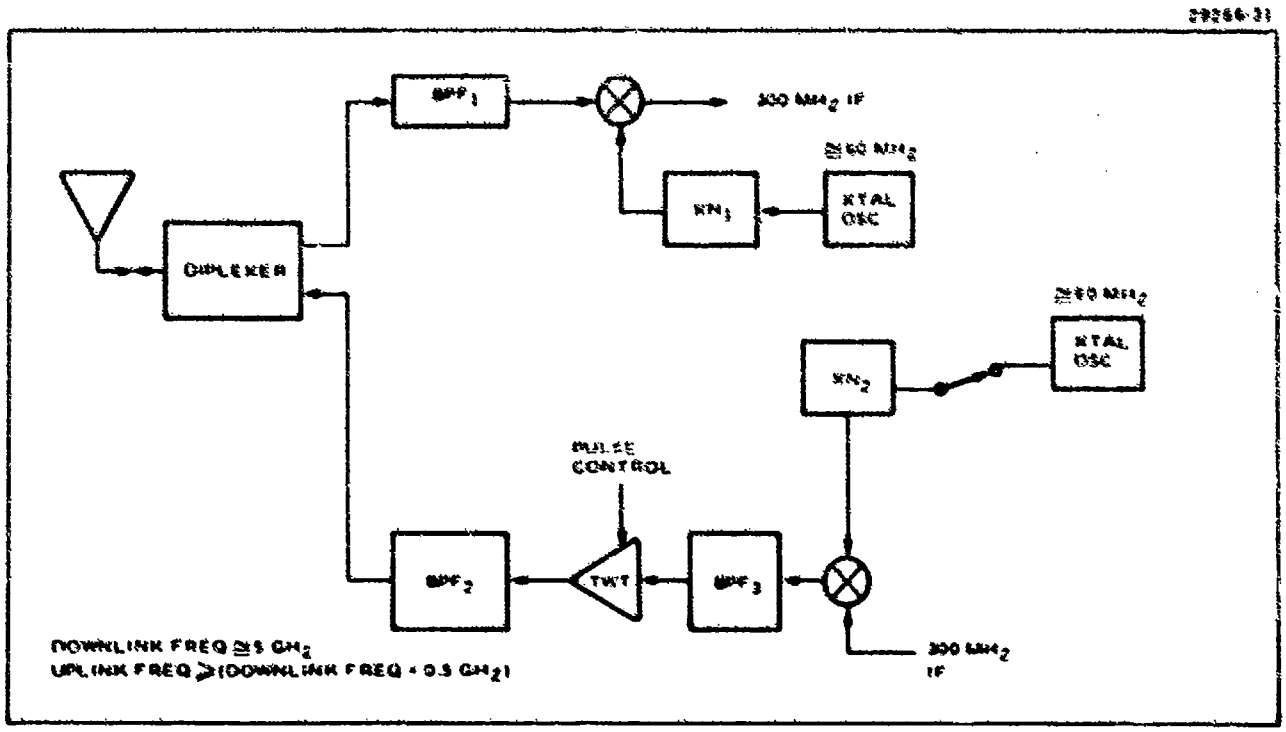

Figure A. RCV-RF Equipment for the Experimental Model. The command and control receiver and telemetry transmitter constituting this equipment are frequency-diplexed to operate from a single antenna.

PRELIMINARY DESIGN OF RF EQUIPMENT (Continued)

Figure B is a block diagram of the RF equipment for the Master Ground Terminal. This equipment is very similar to the equipment in the RCV, except that separate antennas are used for the receive function and the transmit function. Separate antennas are used so that more gain can be provided in the downlink when the link is operating in the telemetry and video mode. Another minor difference between the equipments in the two terminals is that the frequencies of the transmitter and receiver are the reverse of the frequencies of the corresponding unit in the RCV.

The equipment required for the Slave Ground Terminal will be the same as the command and control receiver from the RCV and as a telemetry receiver from the Master Ground Terminal.

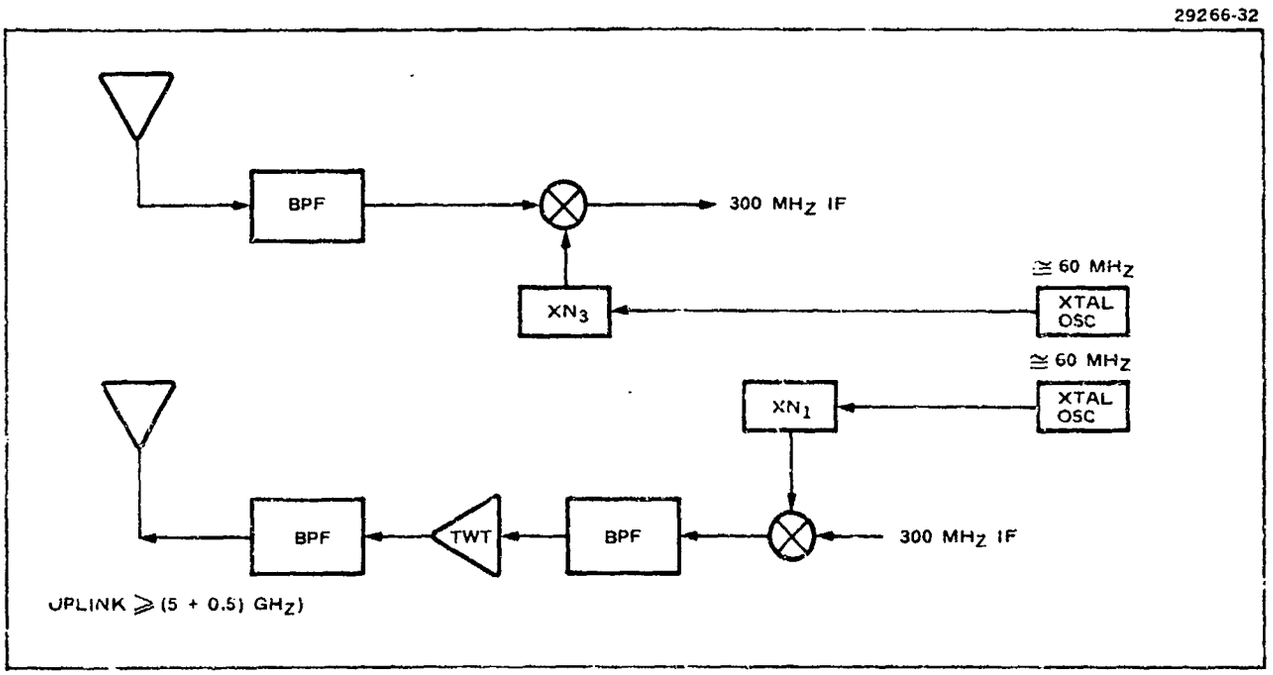

Figure B. Ground Terminal-RF Equipment for the Experimental Model. This equipment differs from that of Figure A (RCV) chiefly in having two antennas.

APPENDIX A

Binary Continuous Phase Shift Modulation (2 CPSM) A-0

BINARY CONTINUOUS SHIFT MODULATION (2 CPSM)

The principal characteristics of Binary Continuous Phase Shift Modulation (2 CPSM) are perhaps more clearly conveyed by relating them to those of the more well-known phase-shift keying (PSK) modulation techniques. This approach is taken here to develop a reasonably rigorous tutorial description of 2 CPSM as a modulation process.

In conventional biphase modulation (Figure A-1), keyed at a rate of one data bit per T second (1/T bps), the resulting spectral density is of the form $(\sin x/x)^2$ as shown in Figure A-1. As is well known, it is possible to transmit this modulated waveform over a channel, together with a similarly modulated waveform, if the carriers are given as orthogonal. One of several ways to satisfy the constraint is to choose the carriers to have a sine-cosine relationship with (1) either the keying speed 1/T having an integral relationship to the carrier frequency or (2) T being much longer than the reciprocal of the carrier frequency. The latter is assumed in this discussion. Thus, a string of data bits clocked at a rate of 2/T can be transmitted over a channel by having every other bit biphase modulate the $\sin(2\pi f_c t)$ carrier at the rate 1/T, and every other bit modulate the $\cos(2\pi f_c t)$ carrier, with no change in the channel spectral occupancy from that of a single biphase modulated carrier (Figure A-2) conveying information at half this speed (1/T). The resulting modulation scheme is that of 4-PSK.

The demodulation process for 4-PSK involves correlation of the composite waveform with the two orthogonal carriers. The complete modulator/demodulator process is shown in Figure A-2. Since the carriers are orthogonal over the keying interval (T) and since the demodulation carriers are assumed to have no phase offset relative to the modulation carriers, the dashed line connection, shown in Figure A-2, is equivalent to summing the two biphase outputs of the modulator and correlating the composite with each carrier, shown as the double line path.

Returning to the original biphase carrier modulation (Figure A-1), the large magnitude in the sidelobes of the spectral density can be attributed to the rapid changes and the discontinuities in the phase of the transmit waveform at the keying transition instants. The sidelobe power can be decreased by shaping the input to the multiplier (the input shown in Figure A-1) in such a manner that the amplitude at the output of the multiplier gradually decreases to zero as the phase transition instant is approached (from either side). One such envelope shaping factor is the half-wave sine waveform, with the half-wave period equal to the keying interval into the biphase modulator (T in Figure A-1). The shaping can be accomplished by either multiplying the keying bit stream or the carrier by the half-sine wave factor. The first mentioned case results in each keying element being converted into a half-wave sine wave of the polarity represented by the keying element (±1). In the second case, the multiplication is performed on the carrier instead. Both operations are shown in Figure A-3. The equivalence of the two techniques is obvious since it is irrelevant on which of the two input branches the half-sine wave multiplication term m(t) enters the multiplier in Figure A-1. It should be noted that precautions must be taken in the latter implementation to guarantee position synchronization between the multiplying half sine waveform and the keying elements, which is not difficult to accomplish.

29266-1

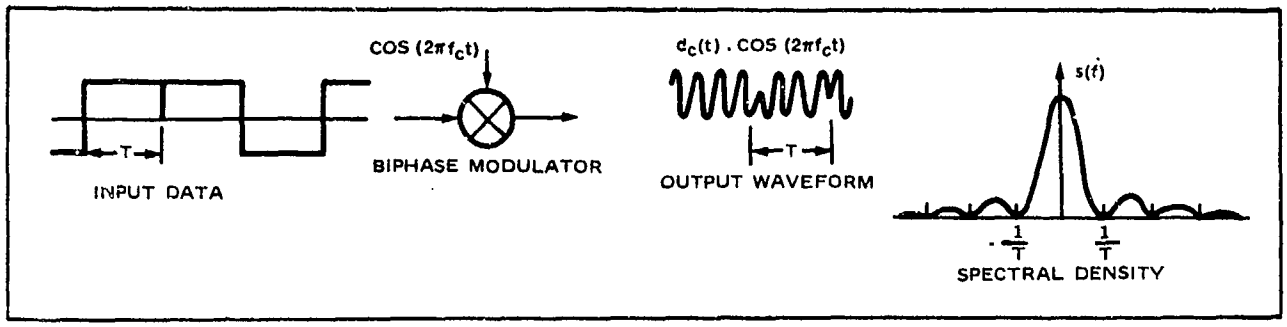

Figure A-1. Characteristics of Biphase Modulation. The conventional biphase modulation results in a spectral density of the form $(\sin x/x)^2$, as shown.

29266-2

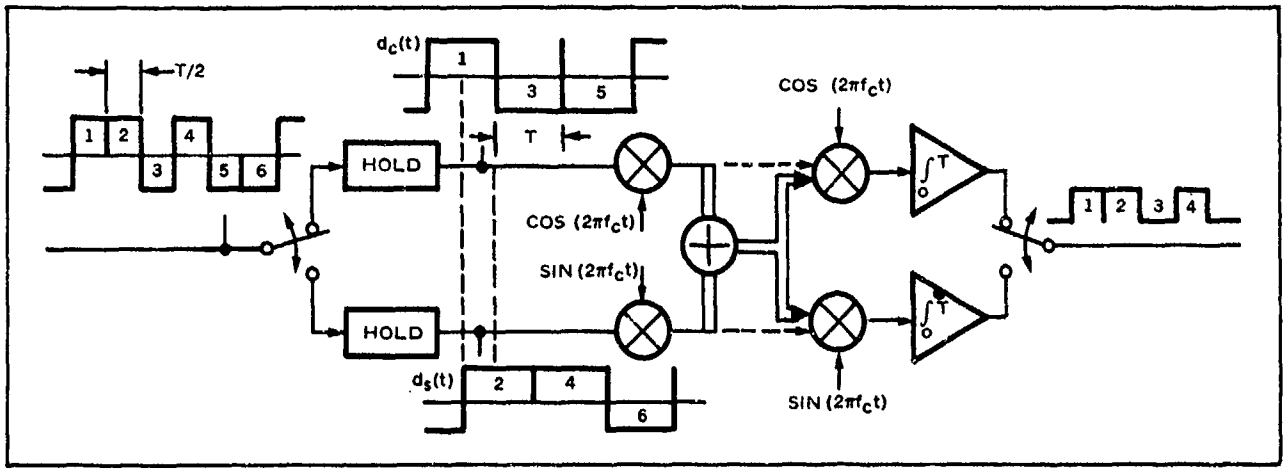

Figure A-2. 4-PSK Modulator/Demodulator. The 4-PSK modulation scheme, by designing carriers with sine-cosine relationship where T is much longer than the reciprocal of the carrier frequency, results in a channel spectral occupancy identical to that of a single biphase modulated carrier.

29266-3

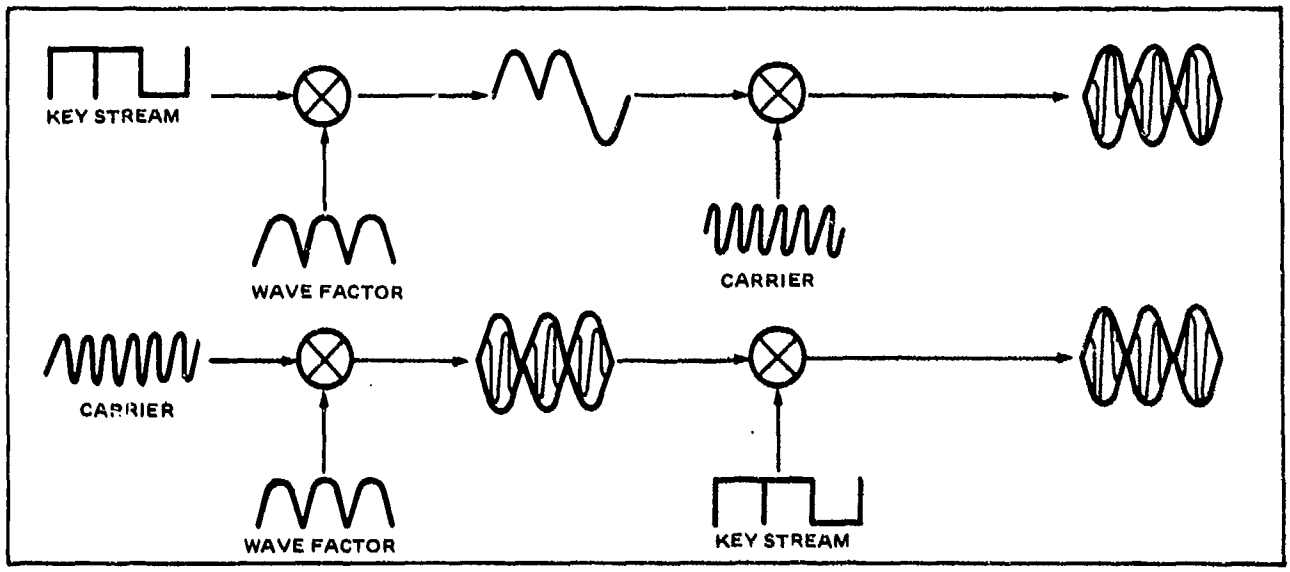

Figure A-3. Two Methods for Half Sine Wave Multiplication. Timing alignment is not critical for the method illustrated at the top of figure (multiplying the keying bit stream by the half-sine wave factor), while it is critical for the method illustrated at the bottom (multiplying the carrier by the half-sine wave factor).

If the multiplication term m(t) is incorporated into both of the orthogonal, biphase, modulated carriers, the result is a pseudo 4-PSK scheme. This scheme exhibits improved sidelobe characteristics as compared with conventional 4-PSK. Unfortunately, the combined output to the channel (output of the summer in Figure A-2) will have a strongly varying, half sine-wave-shaped envelope, resulting in inefficiency as far as the transmitter power amplifier is concerned. However, if the half sine waves operating on the orthogonal carriers are staggered by 90 degrees (i.e., if at the instant of peak value of one of the half sine waves, the other one is zero) the output of the summer will be a constant envelope signal, as follows readily from basic trigonometric relationships and is shown in the following paragraphs. The staggering of the half sine wave waveforms also involves the staggering of the two input keying streams to the quadrature channels since in either case the half sine wave must coincide with the input keying element. Since the two independent keying stream inputs to each of the quadrature channels originate generally from one keying sequence, clocked at twice the rate of each quadrature channel, the appropriate staggering is obtained automatically by alternately sampling the incoming sequence and holding each sample for duration T, as shown in Figure A-2.

By denoting the two keying streams, into the sine and cosine channels by $d_c(t)$ and $d_s(t)$, respectively (Figure A-4) and the half sine wave multiplication waveforms by $m_c(t)$ and $m_s(t)$, respectively, the summer output is

$$s(t) = d_c(t)\, m_c(t) \cos(2\pi f_c t) + d_s(t)\, m_s(t) \sin(2\pi f_c t).$$

The previous discussion about irrelevancy regarding where the half sine wave multiplication is applied (refer to Figure A-3) follows readily from this equation.

Since both $m_c(t)$ and $m_s(t)$ represent a rectified sine-waveform, they can be written as

$$m_c(t) = \left| \sin\left(\frac{\pi t}{T}\right) \right| \tag{1}$$

$$m_s(t) = \left| \sin\left[\frac{\pi}{T}\left(t + \frac{T}{2}\right)\right] \right| = \left| \cos\left(\frac{\pi}{T} t\right) \right| . \tag{2}$$

since the multiplicative terms are always non-negative. Inserting these expressions into the equation for s(t) gives:

$$s(t) = d_c(t) \cdot \left| \sin \frac{\pi t}{T} \right| \cdot \cos 2\pi f_c t + d_s(t) \left| \cos \frac{\pi t}{T} \right| \sin 2\pi f_c t$$

$$= d_s'(t) \cdot \sin\left[2\pi f_c t + \frac{d_c'(t)}{d_s'(t)} \cdot 2\pi \frac{1}{2T} \cdot t \right] \tag{3}$$

where $d_c'(t)$ and $d_s'(t)$ are defined by the relations

$$d_c'(t) \cdot \sin \frac{\pi t}{T} = d_c(t) \cdot \left| \sin \frac{\pi t}{T} \right|$$

and

$$d_s'(t) \cos \frac{\pi t}{T} = d_s(t) \cdot \left| \cos \frac{\pi t}{T} \right|$$

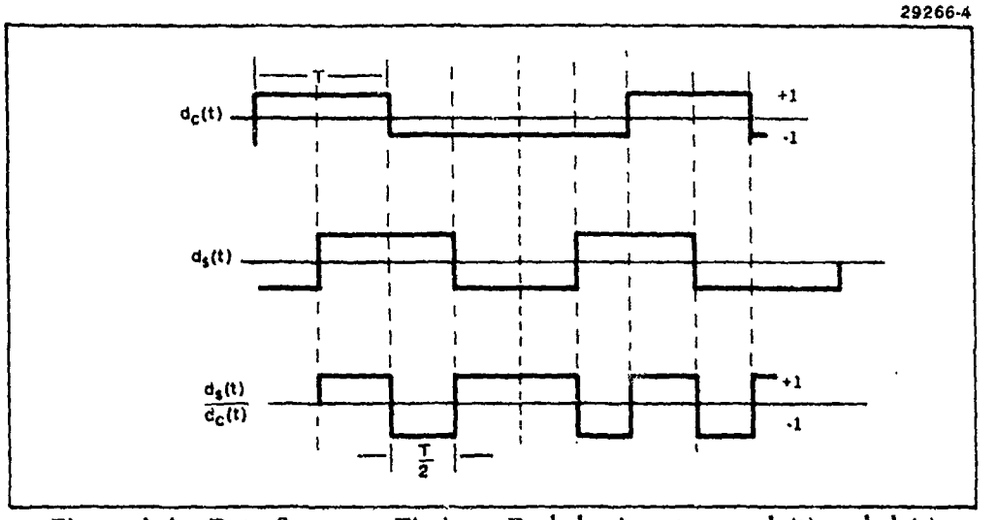

Figure A-4. Data Sequence Timing. Each keying stream, $d_c(t)$ and $d_s(t)$, transitions at 1/T per second.

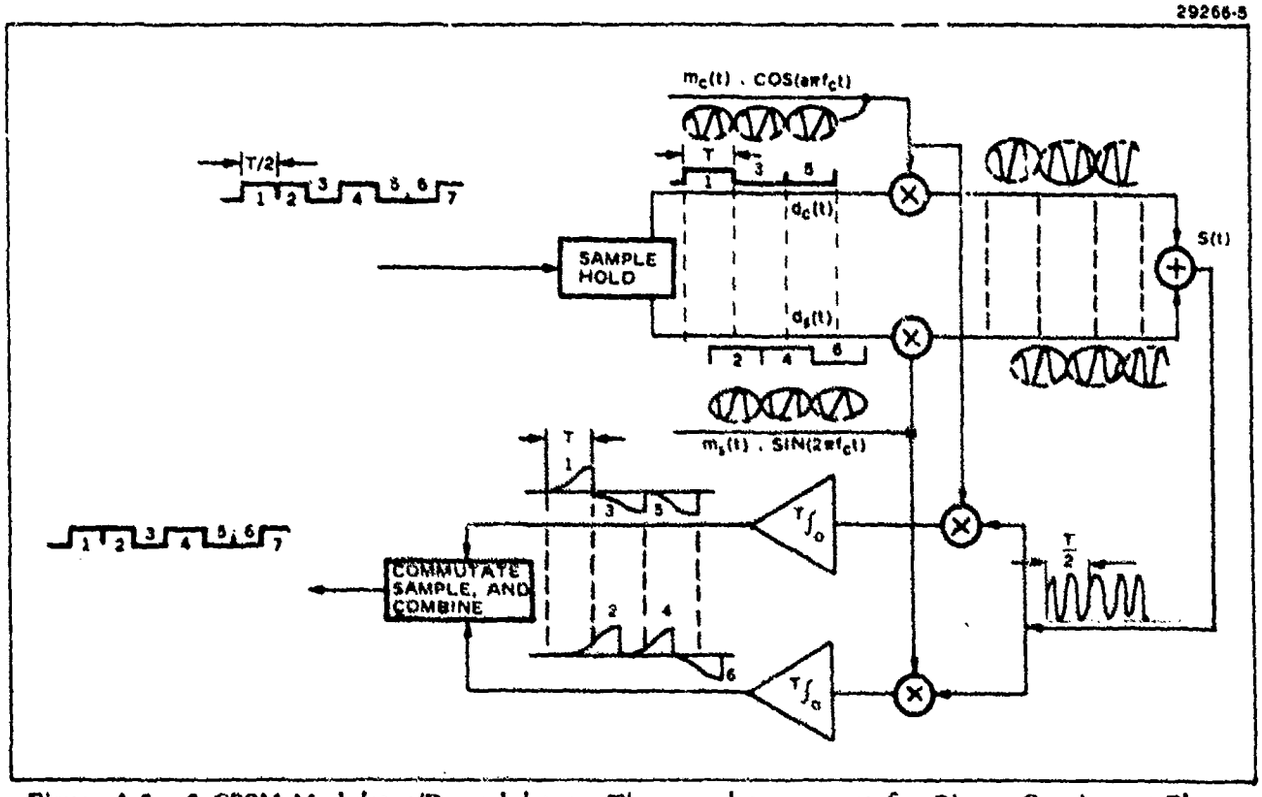

Figure A-5. 2 CPSM Modulator/Demodulator. The complete concept for Binary Courinnous Phase Shift Modulation is illustrated including timing and output waveform annotations.

This implies that the d(t) values have been modified to compensate for negative values in sin x; i.e., the sign of every other element in each of the $d_s'(t)$ and $d_c'(t)$ sequences are the opposites of the signs in the corresponding original sequences, $d_s(t)$ and $d_c(t)$. If the original sequences are random, there is no functional difference between the primed and original sequences and the prime can be dropped.

Since d(t) assumes the values ±1, and defining 1/(2T) = f, s(t) can be written as

$$s(t) = d_s(t) \sin\left[2\pi t\left(f_c + \frac{d_c(t)}{d_s(t)} - f\right)\right] \tag{4}$$

$$= \pm \sin\left[2\pi t\,(f_c \pm f)\right] \tag{5}$$

where in the last equation the dependence on the specific values of the keying input as function of time has been replaced by ±1 values, to obtain a general time independent expression (with respect to the keying input).

The modulation technique performing the processing and carrier mixing functions described is the 2 CPSM scheme. It can be viewed as a pseudo 4-PSK system, the only difference relative to conventional 4-PSK being that the data bits into each of the quadrature channels have been reshaped and staggered. Although it is not obvious from (5), the resulting sum signal does have constant envelope. This equation also reveals, however, that the output can be viewed as FSK with tone spacing equal to

$$2f = \frac{1}{T} = 0.5\left(\frac{2}{T}\right)$$

Since T/2 is the element duration of the incoming (composite) keying stream (Figure A-2), the 2 CPSM scheme is equivalent to continuous phase FSK with modulation index 0.5, thus giving a constant envelope.

The staggered keying sequences $d_c(t)$ and $d_s(t)$ are shown in Figure A-4. The example shows that $d_s(t)/d_c(t)$ can change sign at the rate of 1/(T/2); i.e., the FSK is keyed (the term $(d_s(t)/d_c(t)) \cdot f$ in Eq. (4) at the rate of the incoming sequence.

Each input keying element to the 2 CPSM modulator is of duration T/2. Equation (3) shows that over this interval the phase term changes by $\pm 1 \cdot \pi \cdot (T/2)/T = \pm \pi/2$, and the variation is linear. Thus, in 2 CPSM modulation, each input element causes a linear change of the phase by ±90 degrees, where the sign selection is based on the signs of the two adjacent input bits making up $d_s(t)$ and $d_c(t)$. Since the duration of a bit in both the $d_s(t)$ and $d_c(t)$ sequences is T while the duration of an input bit in the (composite) input sequence to the CPSM modulator is T/2, one of the bits in either the $d_s(t)$ or the $d_c(t)$ sequence changes (but not to plus or minus) per T/2 but not both.

Before describing some additional properties of the 2 CPSM signal, a comment will be made about the demodulator implementation. By staggering the data bit timing at the output of the hold circuits in Figure A-2 (so that bit 2 in one branch starts in the middle of bit 1 of the sequence in the other branch) and by incorporating the half sine wave shaping, as already discussed, the modulator in Figure A-2 becomes a 2 CPSM modulator. The data can be demodulated by the demodulator shown in that figure. Since a sequence of the positive half sine waves (rectified sine wave) contains a dc component, a condition which is disadvantageous as far as the mixers are concerned, it is more practical to multiply the carriers with continuous sine and cosine wave

forms. However, as was mentioned below in equation (3), this modification implies that the true sequences $d_s(t)$ and $d_c(t)$ have in effect been altered into the sequences $d_s'(t)$ and $d_c'(t)$. To remove the bit sign errors, the sign of every other bit in either sequence must be changed. This change can be made either at the input to the mixers in the modulator or at the output of the integrators in the demodulator.

Figure A-5 shows a modulator/demodulator assembly where the commutator in the demodulator performs the sample and hold functions. Since the rectified half sine waveform approach is assumed in Figure A-5, no sign alterations need to be performed. Also, since the modulation process is staggered, the sampling at the outputs of the demodulator integrators must be staggered.

The power spectrum for 2 CPSM is

$$S(f) = \frac{\pi^4}{64}\left(\frac{\sin x}{x}\right)^2\left(\frac{\sin y}{y}\right)^2$$

where

$$x = \pi T'\left(f - f_c + \frac{1}{4T'}\right)$$

$$y = \pi T'\left(f - f_c - \frac{1}{4T'}\right)$$

and

$$T' = \frac{T}{2} = \text{duration of the input keying element to the 2 CPSM modulator.}$$

This spectrum represents the product of the spectra of two biphase PSK systems, each clocked at the same rate as the 2 CPSM modulator, the PSK systems being symmetrically spaced about the 2 CPSM employed carrier and frequencies being spacing between the two PSK systems equalling one-half of the 2 CPSM keying rate.

Figure A-6 displays the power spectrum for the 2 CPSM waveform transmitting data at 60 Mbps. The dashed line is the power spectrum for a 4-PSK waveform with the signalling rate adjusted to 40 Mbps to give a 3-dB bandwidth equal to the 60 Mbps 2 CPSM scheme. The 2 CPSM spectrum has less energy in the sidelobes since the spectrum decreases as $(\sin x/x)^4$ rather than as $(\sin x/x)^2$ for the 4-PSK signal.

The corresponding 2 CPSM autocorrelation function is sketched in Figure A-7. It is a continuous function of τ which goes to zero at about 34 nanoseconds if the above transmission rates are assumed.

From the 2 CPSM autocorrelation function, the delay lock loop tracking error function can be derived as shown in Figure A-8. The dashed line represents the equivalent function for the 4 PSK waveform. The slope of the 2 CPSM tracking error curve in the vicinity of the zero crossing is slightly greater than that for the 4 PSK curve. This property of 2 CPSM provides for slightly more accurate tracking estimates, as well as more accurate time of arrival estimates in systems with that requirement.

29266-6

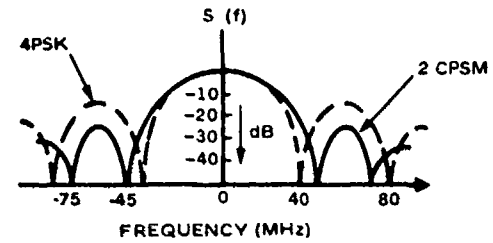

Figure A-6. Power Spectrum Comparison. 2 CPSM has less sidelobe energy than 4PSK. 4PSK.

29266-7

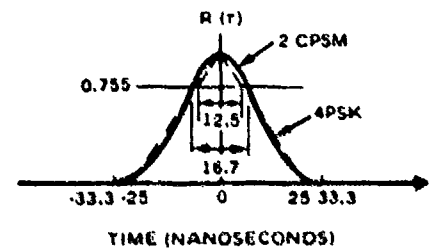

Figure A-7. Autocorrelation Comparison. The width of the autocorrelation function for 2 CPSM at a signaling rate of 60 Mbps is comparable to that for 4-PSK at a 40 Mbps signaling rate.

29266-8

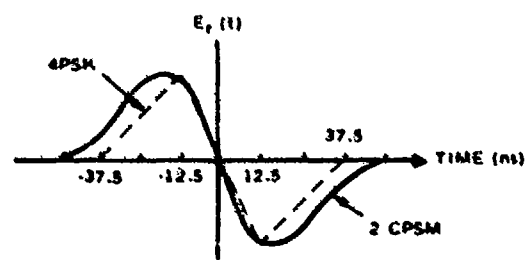

Figure A-8. Delay Lock Loop Tracking Error. The slope of the 2 CPSM tracking error is slightly greater than that for the 4-PSK.

APPENDIX B
TAPPED DELAY LINE PREAMBLE ACQUISITION TECHNIQUES

Classical Concept of Preamble Acquisition B-0
Understanding of the Baseband Preamble Acquisition Technique B-2

Appendix B – Tapped Delay Line Preamble Acquisition Techniques

CLASSICAL CONCEPT OF PREAMBLE ACQUISITION

In WCCM the preamble acquisition function would be used to reduce the uncertainty in time of arrival of the burst signal from several hundred microseconds to less than one hundredth of a microsecond. Component accuracy and stability difficulties exist in the classical IF matched-filter implementation.

The preamble signal consists of a pulse train of several thousand equal-amplitude, phase-coded elements (chips). Each pulse is sent in one of two phases and has a duration of 17 ns. Thus, the entire preamble lasts about 100 μs. The receiver has a stored replica (stored reference) of the pattern used to generate the preamble and is precisely on frequency. However, the precise distance between the transmitter and receiver is not known to the receiver, and thus the time of arrival (TOA) of the signal has an uncertainty of several hundred μs. Additionally, the phase shift of the received signal is unknown. The purpose of the preamble acquisition function is to reduce this TOA uncertainty to less than one chip.

The classical approach to preamble acquisition is shown in the facing figure. The heart of this technique is the tapped delay line which continuously provides time-shifted replicas of the received signal. Each replica is delayed precisely one chip length from that at the previous tap. In this classical approach, the delay is provided at an IF (intermediate frequency), which might typically be centered at 300 MHz, for the 60-MHz bandwidth involved here. Connected to each tap is a multiplier or switchable phase inverter. The phase inverters are controlled by the receiver's stored reference pattern so that when the received preamble is fully in the tapped line, each chip of the received signal is at the same tap as the corresponding stored pattern element. By phase-inverting the proper elements, at this one time, all of the inputs to the summer are in phase agreement and will result in a large combined pulse output. At any other time, the match between the received signal and the stored reference pattern will not exist, and that condition will result in having nearly equal numbers of the summer inputs in each phase. The result is a very low summer output at all times, except when the preamble is just in the tapped line. This combination of tapped delay line, multipliers, and summer is sometimes termed a matched filter correlator.

The other elements – bandpass filter, envelope detector, and threshold detector are important, but they are less critical than the tapped line and multipliers. The bandpass filter must reduce out-of-band noise with minimum signal distortion. The envelope detector and threshold detector must determine the timing peak (or center) of the pulse resulting from the received signal. Since the preamble detector must operate even when the signal level is quite low – and in the presence of noise, all of the components must be aligned to maximize the signal compared with noise, and the threshold must be set to limit the false alarm rate (FAR). This operation at low signal and with varying noise or interference is a critical part of system design.

This classical IF, phase-coded preamble acquisition requires close control over the amplitude and time-delay characteristics of the tapped delay line. This control is required both over manufacturing tolerances and over temperature and aging effects in the field environment. For example a cumulative gain variation per tap of only one-hundredth of 1 percent results in over 50-percent degradation in the pulse output. Even more critical, a cumulative time delay error per tap of less than one-tenth of 1 degree at the 300-MHz IF (0.001 ns) would completely eliminate the pulse output.

29266-18

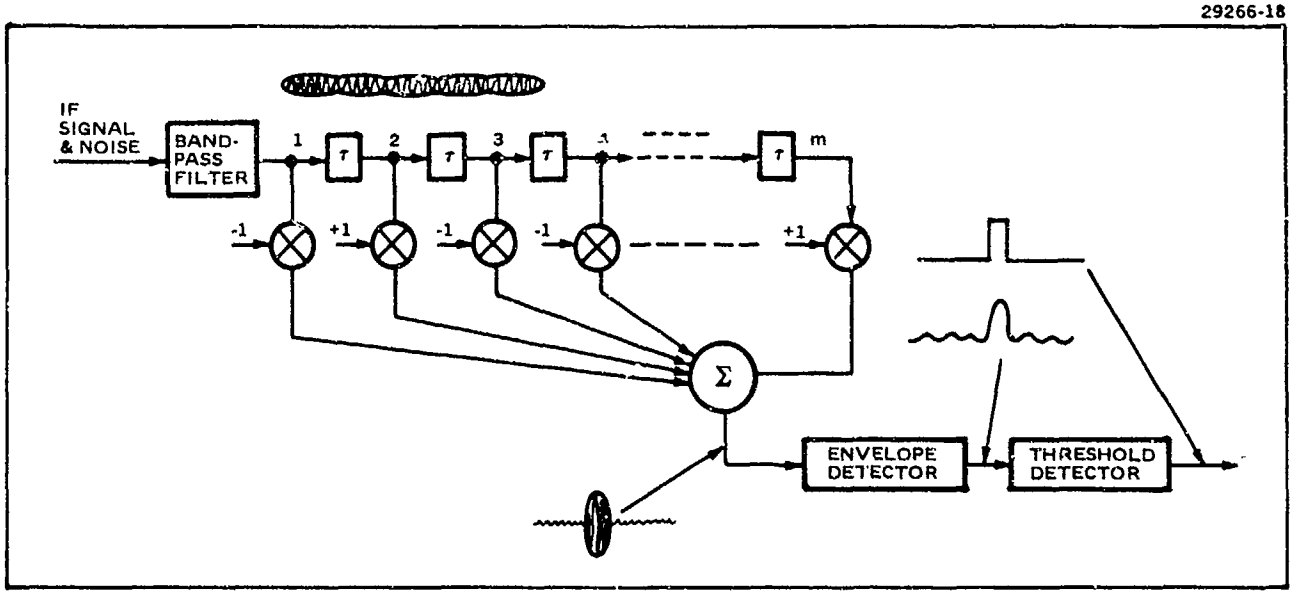

If Phase Coded Preamble Acquisition. This classical approach provides excellent signal detection, but requires close control of many high-frequency components.

UNDERSTANDING OF THE BASEBAND PREAMBLE ACQUISITION TECHNIQUE

Component accuracy and stability requirements of the classical IF matched-filter preamble acquisition technique are eliminated through the use of a digital baseband technique.

The time-delay accuracy requirement of the IF preamble acquisition technique, described in the previous topic, is much relieved (by a factor of 5) by utilizing a baseband preamble acquisition technique. This technique (see Figure A) provides performance equal to that of the IF technique. Since the phase of the received signal is not known, two quadrature processing channels are required. For each channel, a local oscillator at the center frequency of the IF is used to mix to baseband (sometimes termed "phase detection"). In one case, the local oscillator is used directly, and in the other case a phase-shifted (quadrature) local oscillator is used. Each of the baseband channels operates to match the signal just as in the IF approach. However, each channel contains only part of the signal and half of the noise. The square and sum functions recombine the signal to eliminate the effect of unknown phase and produces an output much like the envelope detector of the IF technique. While the time-delay accuracy required is reduced by this baseband approach, the cumulative gain problems still exist, and a large quantity (several thousand) of multipliers (switchable inverters) are required.

The analog baseband preamble acquisition technique is useful primarily as a stepping stone for understanding the digital approach of Figure B. By converting the analog low-pass outputs to digital form and shifting these values along a shift register, the critical difficulties of maintaining stability of gain and time delay are effectively eliminated. Since the values are maintained digitally, they do not change as they are shifted along. The rate of shifting is controlled by the stable crystal clock of the WCCM unit and is, therefore, much more accurate than necessary for this function. While a small loss in signal-to-noise is experienced in the analog-to-digital conversion process, it is more than compensated for by the elimination of stability problems.

In the digital approach, the multipliers are replaced by "exclusive or" gates, thereby eliminating any repetitive analog components. By using the complementary MOS processing, 50 stages of the shift registers and multipliers can be packaged in one small package (about one-quarter inch square).

This digital baseband technique has been proven by Hughes in field-tested hardware. It offers the promise of small size, high reliability, and low cost for production components.

29266-19

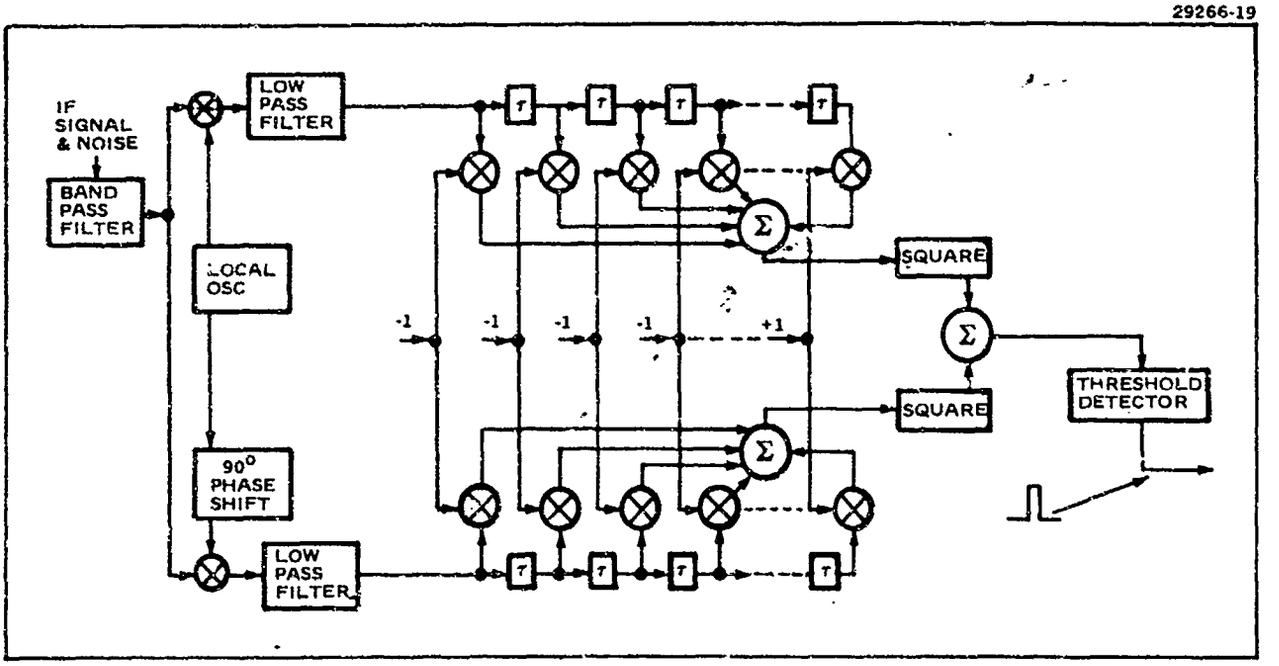

Figure A. Baseband Phase-Coded Preamble Acquisition. The quadrature baseband detector provides equal performance to that of the scheme shown in the preceding topic, with somewhat less critical components.

29266-20

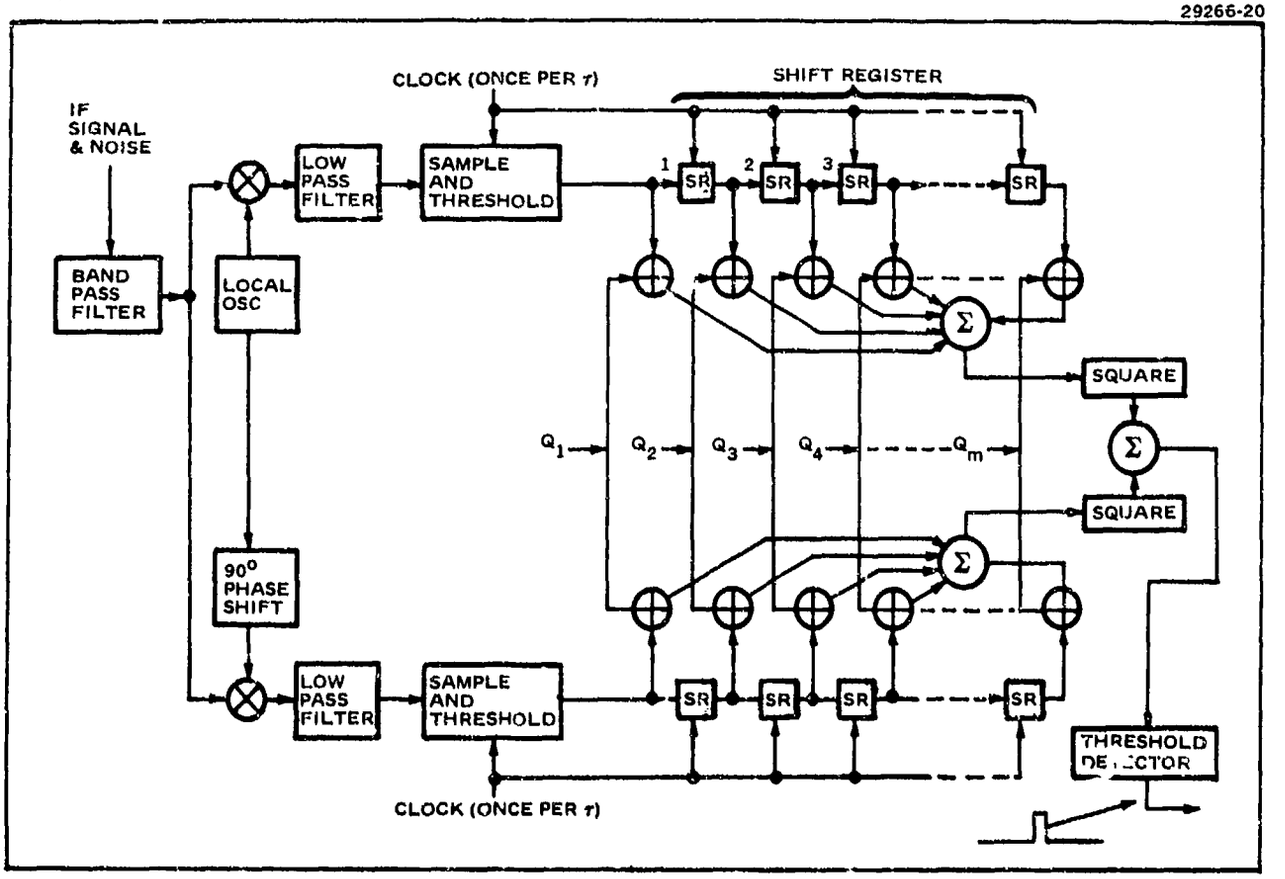

Figure B. Digital Phase-Coded Preamble Acquisition. Replacing analog time delays with digital shift register elements (SR) and replacing multipliers with exclusive-OR gates (⊕) eliminate nearly all critical components, promote miniaturization, and reduce costs.

BLANK PAGE FOLLOWS B-3/B-4

APPENDIX C

RCV Transmitter Power Amplifier Hardware Survey and Evaluation C-0

RCV TRANSMITTER POWER AMPLIFIER HARDWARE SURVEY AND EVALUATION

The multiple channel TDMA/FDMA RCV transmitter power amplifier requirements can be met very easily using conventional existing components. Single channel burst TDMA power amplifier requirements cannot presently be met and high risk development should be expected for near term WCCM applications.

In the course of the WCCM study, considerable attention was given to evaluating both a single channel return link which employed burst TDMA, as well as the selected multiple channel TDMA/FDMA return link. Table C-I lists the RCV power amplifier requirements for the multiple channel TDMA/FDMA and single channel burst TDMA approaches. These requirements were derived using the waveform design parameters applicable to the two return link approaches.

Multiple Channel TDMA/FDMA RCV Transmit Power Amplifier — The multiple channel TDMA/FDMA power amplifier requirements outlined in Table C-I were analyzed for hardware implementation using discrete solid state components, klystrons and traveling wave tubes.

It was determined that existing solid state technology could not presently meet the requirements of the system. Watkins Johnson, presently working on state of the art Electron Bombardment Semiconductor (EBS) amplifiers has managed to reach CW power levels of 50 to 100 watts, but only in sub-GHz frequencies. It is projected that EBS amplifiers will have the capability of being used as C-band grid modulators in two to four years. As grid modulators, rise and fall times in the order of 10 to 15 nanoseconds will be realized. Typical efficiencies for the EBS amplifier are between 50 and 70 percent.

Hughes and Sperry Rand are presently engaged in development work with Trapatt amplifier design. Hughes has developed and tested a 12 watt X-band pulsed Trapatt amplifier with 29 percent efficiency, however with limitations of 50 microsecond pulse durations and 20 percent duty cycle. They have also developed a C-band pulsed 20 watt Trapatt amplifier with 35 percent efficiency, however with limitations of 15 microsecond pulse durations and 20 percent duty cycles. Hughes is currently designing a 20 watt CW X-band Trapatt amplifier which they expect to complete before the end of this year. Expected instantaneous bandwidths of the 20 watt system is 2 percent with a total tunable bandwidth capability of approximately 10 percent. Increased instantaneous bandwidths of up to 10 percent will be attempted during the development phase. Hughes goals include the development of a 100 watt CW X-band Trapatt amplifier before June of 1973. The 100 watt system will be developed using power combining techniques associated with the 20 watt CW amplifier. No data is presently available on noise, phase linearity, or phase jitter parameters. The feasibility of 1 kW CW C- and X-band systems before 1975 is very realistic based on current strides in Trapatt amplifier design. Presently Sperry Rand is contracted by the U.S. Navy to develop a 11 kW pulsed Trapatt amplifier with 33 percent duty cycle (1975 time frame). The parameters associated with the Sperry development contract are classified and therefore were not available for this report.

The use of Klystrons for baseline implementation is not presently realizable due to their severe instantaneous bandwidth limitations although tunable bandwidths of 500 MHz can be achieved at a 100 watt average power level in both the C- and X-bands. Instantaneous bandwidths are limited to approximately 40 MHz. In fact the cost effectiveness of using Klystrons instead of TWTs with compatible 40 MHz bandwidth capability is questionable. Conventional Klystron

amplifier parameters are listed in Table C-II. It can be seen from these tables that both the instantaneous and total bandwidth requirements of the baseline system far exceed typical Klyston parameters. Another disadvantage of the Klystron is the requirement for a Klystron tuner.

TABLE C-I. MULTIPLE CHANNEL TDMA/FDMA AND SINGLE CHANNEL BURST TDMA POWER AMPLIFIER PARAMETER REQUIREMENTS

Parameter	Multiple Channel TDMA/FDMA	Single Channel Burst TDMA
Average Power	100 W	100 W
Peak Power	100 W (Mode C)	1 kW
Duty Cycle	100%	12 to 15%
Bandwidth W/O Mechanical Tuning	420 MHz	200 MHz
Instantaneous Bandwidth	60 MHz	200 MHz
Cooling	Conduction	Conduction
Gain	30 to 40 dB	30 to 40 dB
Noise Figure	25 to 30 dB	25 to 30 dB
Specification	MIL-E-5400 Class II	MIL-E-5400 Class II
Turn-On/Off Speed	100 μsec (Mode C)	50 μsec
Max. Pulse Duration	1-3 ms (Mode C)	2 ms
Frequency	C, X or KU band	C, X or KU band

TABLE C-II. TYPICAL KLYSTRON PARAMETERS

Total Bandwidth	250 MHz
Maximum Pulse Width	1-50 μsec
Maximum Instantaneous Bandwidth	10 MHz
Power	High Power 50-100 kW
Tuning	Mechanical, Required Kystron Tuner
Gain	30-40 dB
Noise Figure	28-30 dB
Efficiency	30-40%
Phase Linearity:	
K-band	<8° over 4 MHz Spectrum at 250 W
KU Band	<12° over 4 MHz Spectrum at 100 W

RCV TRANSMITTER POWER AMPLIFIER HARDWARE SURVEY AND EVALUATION (Continued)

Another device which was discussed in the WCCM proposal was the Twystron. This device combines the high power capabilities of the Klystron and the large bandwidth characteristics of the TWT. The Twystron, however is utilized exclusively with power levels in excess of 200 kW. The implementation of twystron technology to power levels less than 200 kW would gain no advantage over conventional TWT technology, and therefore has not been considered by tube manufacturers. In addition, Twystron efficiency reduces drastically at reduced operating powers.

The multiple channel TDMA/FDMA RCV power amplifier requirements can be met very easily using conventional conduction cooled helix structured PPM-focused traveling-wave tubes. Table C-III includes technical data from several TWT manufacturers illustrating present day conventional TWT parameters. Due to the high bandwidth characteristics of TWTs, typically one octave, mechanical or electrical tuning will not be required to meet the 420 MHz bandwidth requirements. TWTs built for airborne application conforming to MIL-E-5400 Class II are available from many manufacturers including Hughes, Teledyne MEC, Varian, Sperry Rand, Litton, Keltec and Cober to name a few. Because a TWT is electrically long, its phase and gain characteristics are sensitive to even small changes in operating voltages. Typical values of phase linearity in X-band are 2° over a 60 MHz bandwidth and within 10° over a 500 MHz bandwidth. Phase jitter being highly dependent on the TWT power supply can be controlled to a high degree by power supply design and TWT gain. The TDMA burst mode requirement can be satisfied by simply pulsing the CW tube on and off. Although the average power will drop to approximately 4 watts (assuming a duty cycle of 4 percent), the processing gain associated with the TDMA burst mode will more than account for the average power amplifier gain reduction. The use of a dual-mode TWT in which the peak to average power ratio is typically 3 to 5 dB could be used to provide additional gain, however, this is not considered necessary. Another consideration that must be given to the TWT is that of degree of cut-off which can be attained. That is, actual suppression of the carrier that can be obtained relative to a peak pulse power output. Characteristically this value is 50 to 60 dB. The baseline system will require closer to 60 dB carrier suppression to avoid RCV carrier interference with other RCVs operating in the TDMA burst mode. This suppression level is not seen as a serious problem.

Single channel burst TDMA RCV Transmit Power Amplifier — For RCV applications, low primary power light weight power-amplifiers are necessary. Typical RCV payload capability as pointed out by the Ryan Corporation are listed in Table C-IV. A typical CW 1kW C- or X-band TWT with PPM focusing weighs in excess of 100 pounds. If solenoid focusing is used, weight decreases to approximately 50 pounds, however at least 1 kW of additional primary power is required for the solenoid supply. This essentially forces the designer to consider the relative light weight, low power pulsed TWT devices. However, existing TWTs are generally designed either for CW operation or pulse applications with typical maximum pulse duration of 30 microseconds and maximum duty cycles of 8 percent. As such, the single channel TDMA RCV power amplifier requirements specified in Table 1 impose a more severe requirement on existing device technology.

TABLE C-III. TYPICAL 100 WATT CW TWT TUBE AND AMPLIFIER PARAMETERS

Parameter	Sperry Rand STX-52252	Teledyne* M2705	Hughes** 279H	Varian VTC 6260A1	Keltec, Inc. CA 600-100*
Average Power	100 W	100 W	100 W	100 W	100 W
Total Bandwidth	4.2 GHz	4 GHz	350 MHz	4 GHz	4 GHz
Cooling	Forced air	Conductive	Conductive	Forced air	Conductive
Saturation Gain	44 dB	30 dB	35 dB	30 dB	30 dB
Noise Figure		35 dB	29 dB	35 dB	35 dB
Beam Voltage	9 kV		4 kV	4.5 kV	----
Frequency	8.2-12.4 GHz	7-11 GHz	5.9-6.25 GHz	4.0-8.0 GHz	4.9-8.0
Efficiency	16-25%	9%	45-50%	20-30%	9%
Size	16 in (length)	16 in x 8 in x 5 in		15 in (length)	21 in x 7 in x 5 in
Weight	7 lb	35 lb		5 lb	33 lb
VSWR Input		2.5:1			3.0:1
Output		2.5:1			3.0:1
Prime Power		1100 Watts			1150 W
Voltage		115 VAC 3ϕ			115 V 3ϕ
Frequency		380-420 Hz			400 Hz
Cost		$15-20K	$50K	$5500	$12,975

*Includes TWT, solid state power supply and all necessary protective and control circuitry.
**Represents State-of-the Art TWT design. 1975 cost estimate considerably less.

TABLE C-IV. ESTIMATED AVIONICS PAYLOAD CAPABILITY FOR RCVs

	Configuration		
Payload Parameters	High Altitude Relay	High Altitude RECCE	Low Altitude RECCE
Size Volume			
Normal Configuration	15 ft^3	9.0 ft^3	6 ft^3
Nose Extension	25 ft^3	2.4 ft^3	22 ft^3
Wing Pods	2 x 25 ft^3	2 x 13 ft^3	2 x 9 ft^3
Aft Equipment Components	4 ft^3		
Weight (of Additional Payload)			
Normal Configuration	500 lb	200 lb	180 lb
Wing Pods	2 x 1,000 lb	2 x 700 lb	2 x 500 lb
Power Available			
Normal Configuration	9.6 kW 4.2 kVA	3 kW	3 kW
Larger Generator	----	3.6 kW +4.2 kVA	3.6 kW +4.2 kVA

RCV TRANSMITTER POWER AMPLIFIER HARDWARE SURVEY AND EVALUATION (Continued)

The most severe requirement is the 2 millisecond pulse duration dictated by the single channel TDMA burst requirements. The severity of this problem is such that at present, TWTs meeting the single channel TDMA RCV power amplifier requirements do not exist. Presently Hughes, Electron Dynamics Division, is developing a 2 kW 40 percent duty cycle 200 MHz bandwidth depressed collector pulsed TWT. This particular TWT represents a potential device for use in the single channel TDMA return link RCV power amplifier. The parameter data for this tube is included in Table C-V for reference only. Table C-V includes typical 1 kW TWT parameters.

Teledyne MEC has looked into the feasibility of developing a pulse TWT to meet the single channel TDMA burst power amplifier requirements. Presently they have no TWT which will meet these requirements, however they have informed the author that they can develop one to meet the requirements at a development cost of $150K within a 10 months time frame. The Teledyne MEC TWT will be similar to their present M5813 pulse TWT and can be built for either C- or X-band operation. Nonrecurring engineering costs will be slightly less for the C-band system. Expected TWT weight is 8 pounds with 24 percent efficiency. Teledyne anticipates a total dollar cost of $16K for production run of a power amplifier including the above TWT with power supply, modulator and protection circuitry.

TABLE C-V. TYPICAL 1KW PULSED TWT PARAMETERS

Parameter	Varian VTX 6380A1	Varian VTC 5360A1	Hughes 774 H	Varian VTC 5261J1	Hughes* Atlas-2
Peak Power	1 kW	1 kW	1.25 kW	1 kW	2 kW
Cooling		Conduction	Conduction	Conduction	Conduction
Saturation Gain	30 dB	40 dB	50 dB	54 dB	
Frequency	8.4-9.8 GHz	5.4-5.9 GHz	8.0-16 GHz	5.4-5.9	200 MHz BW
Efficiency		12%	11%	20%	28%
Size		12.5 in. long	13.5 in. long	12 in. long	
Weight	115 lb	5 lb	5 lb	4 1/2 lb	14 lb
VSWR Input Output				2.5:1 2.5:1	2.5:1 2.5:1
Cost	>$10K	$4,000		$7,500 Single qty.	$15.3K
Max. Pulse Duration	na	20 μsec	20 μsec	25 μsec	TBD
Duty Cycle	100%	1%	4%		40%
Beam Cycle		8.5 kV	10.5 kV	7 kV	12.5 kV
Peak Beam Current		1 a	1.7 a	1 a	

*presently in development stage

APPENDIX D

Evaluation of Performance Improvement Resulting From Narrowband Interference-Reducing Notch Filters D-0

EVALUATION OF PERFORMANCE IMPROVEMENT RESULTING FROM NARROWBAND INTERFERENCE-REDUCING NOTCH FILTERS

The use of automatic tracking notch filters in the WCCM can be of significant value in noise environments containing narrowband interfering signals of large amplitude. Simulation results show a median improvement in signal-to-noise ratio of up to 9 dB for cases of multiple interferers where the number of filters is less than the number of inteferers.

The spread spectrum nature of the WCCM allows it to discriminate against narrowband interfering signals having power much larger than the desired signal power (within processing gain limitations). It is of interest, however, to evaluate the improvement in system performance to be gained by the incorporation of automatic tracking notch filters to perform predetection filtering of narrowband interference. Two aspects of the problem are pertinent, one being the effect of notch filters on the desired signal and the second being the reduction in interference due to notch filtering.

The effect of notch filtering on the desired signal of primary interest is the loss in peak signal-to-wideband-noise ratio at the output of the notched filter. This quantity was determined analytically, assuming that the notch filter can be represented at baseband as a simple pole-zero pair in the S-plane. Mathematically, the difference in the peak output signal-to-wideband-noise ratio with notch filtering $(SNR)_{NM}$ and without $(SNR)_M$ can be expressed as follows:

$$(SNR)_M - (SNR)_{NM} = 10 \log \left[\frac{2.78(B_n/B)}{1 - e^{-2.78\,(B_n/B)}} \right]$$

where B_n is the notch filter 3 dB depth bandwidth and B is the signal 3 dB bandwidth. The loss in peak signal-to-wideband-noise ratio is plotted in Figure D-1 as a function of the ratio B_n/B. It can be seen that for notch fractional bandwidth less than 0.2 the loss in signal-to-noise ratio is less than 1.2 dB. As an approximation, if the fractional bandwidth is small, the loss is signal-to-noise ratio is directly proportional to the fractional notch bandwidth. If multiple notches are used, the loss is directly proportional to the ratio of the sum of the notch bandwidths to the signal bandwidth.

The second aspect of interest is the improvement in the overall signal-to-noise ratio which can be realized in a noise environment containing narrowband interference. A computer simulation was performed using a Monte Carlo approach to determine the improvement factor. The simulation is based on the selection of N independent, identically distributed random numbers to represent the power in each of N narrowband interfering signals. The probability density function which governed the distribution of the power was as follows:

$$P(x) = \frac{1}{\tau\left(1 - e^{-80/\tau}\right)}\, e^{-x/\tau} \qquad 0 \le x \le 80$$

$$\tau = 8.65$$

where x is the power in dB above some reference level and τ is approximately equal to the average value of x. The selection of this distribution can be easily justified under the assumption of a uniform spatial distribution of emitters. The selection of 80 dB of dynamic range is somewhat arbitrary but does not affect the results appreciably if the dynamic range is much larger than τ.

29266-72

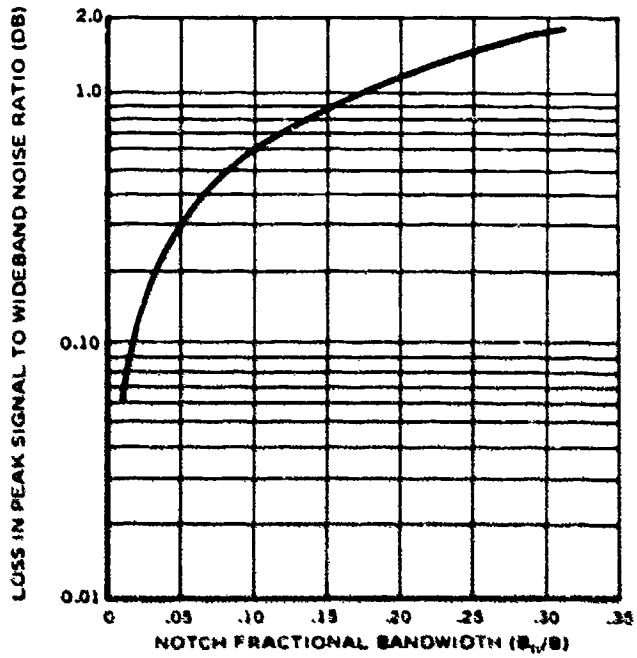

Figure D-1. Loss in Peak Signal-to-Noise Ratio Against Wideband Noise Due to Notch Filtering

EVALUATION OF PERFORMANCE IMPROVEMENT RESULTING FROM NARROWBAND INTERFERENCE-REDUCING NOTCH FILTERS (Continued)

The flow of the simulation is as follows. First, N independent random numbers are selected from the distribution given above to represent the power for each of the N interfering signals. Then the power in each individual interfering signal is compared to the total power of all the interfering signals plus wideband noise. (For the simulation, the wideband noise level was taken to be ten times the smallest possible interfering signal level.) If the ratio of the interfering signal level to the total interfering plus wideband noise power exceeded the notch activation threshold R, then the interfering signal was considered to be a candidate for notching. Of those interfering signals above threshold, M were selected randomly for notching and were assumed to be totally eliminated, where M is the number of available notch filters. For each value of N, M, and R, the above procedure was repeated 25 times by using a different interfering signal set for each trial. A summary of the results of the simulation are shown in Figures D-2 through D-4. Each point on the curves represents the median result of 25 trials. Each of the plots shows the median improvement in overall signal-to-noise ratio, which is equivalent to the decrease in the median interference plus wideband noise ratio between the input and output of the notch filter bank. The improvement factor is plotted as a function of the notch filter activation threshold for different numbers of interfering signals and different numbers of notch filters. Each of the curves for which the number of available filters is less than the number of interfering signals shows decreasing performance as the threshold is increased towards 1 and decreased towards 0. The performance decreases as the threshold is increased towards 1 because the notch filters will not be activated if the threshold is set too high. If the threshold is set too low, then all the available notch filters will be activated but they can then become assigned to the low level interferers since they are assigned to any interfering signal above threshold on a random basis and are not necessarily assigned to the largest interfering signals. Thus, if the threshold is set too low, the notch filter bank becomes saturated, resulting in decreased performance. The optimum threshold setting is a function of the number of filters available; it appears to be relatively independent of the number of interfering signals. As the number of available filters increases, the threshold can be decreased so that lower level signals can be acted upon without sacrificing the ability to notch out the large interferers. If one filter is available the optimum threshold is in the vicinity of 0.2 or 0.3. If two filters are available the optimum threshold is in the vicinity of 0.05 to 0.1. For three filters it is near 0.05 and for five filters it is between 0.02 and 0.05.

The curves show an improvement in performance as the number of filters is increased, but the improvement is not directly proportional to the increase. It appears that the incremental improvement in dB is constant as the number of filters is increased geometrically; that is, if increasing the number of filters from one to two gains 2 dB, then another 2-dB improvement requires increasing the number of filters from two to four. The observed improvement in signal-to-noise ratio ranges from 4 to 5 dB for one filter up to 8 to 9 for five filters.

29266-73

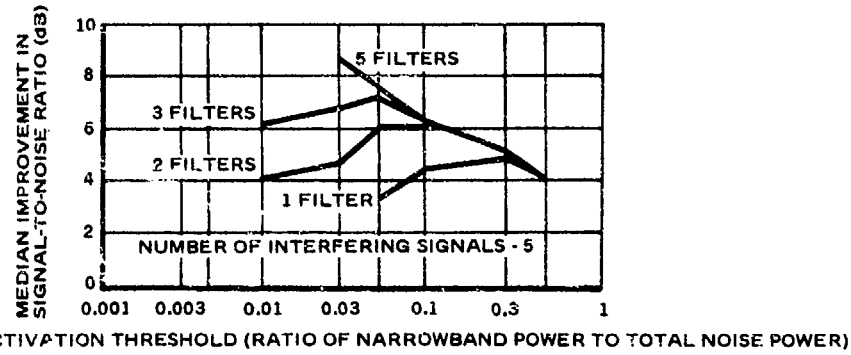

Figure D-2. Median Improvement in Signal-to-Noise Ratio in a Narrowband Interference Environment for 5 Interfering Signals.

29266-74

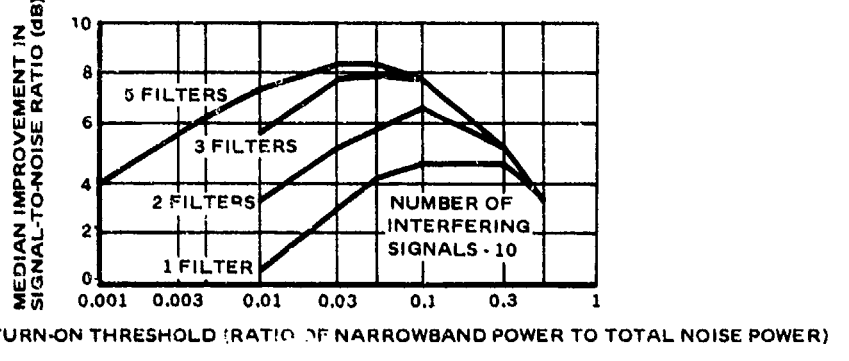

Figure D-3. Median Improvement in Signal-to-Noise Ratio in a Narrowband Interference Environment for 10 Interfering Signals.

29266-75

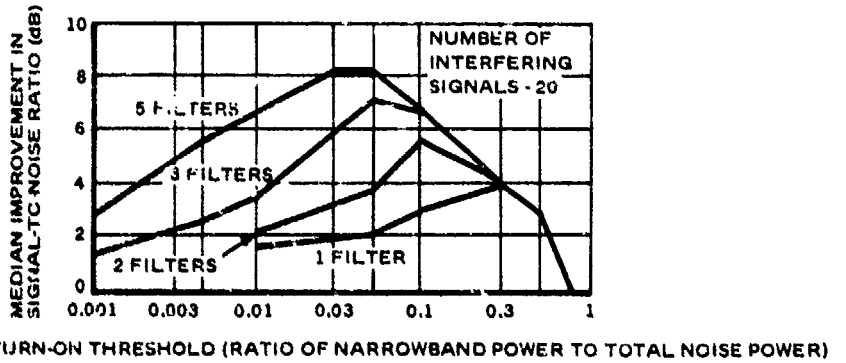

Figure D-4. Median Improvement in Signal-to-Noise Ratio in a Narrowband Interference Environment for 20 Interfering Signals.

GLOSSARY
(Alphabetical List of Abbreviations)

A/D	analog to digital
AGC	automatic gain control
AJ	anti-jamming
ARQ	automatic retransmission request
ATR	air transport rack
BNC	a class of connector
BPF	band pass filter
BPS	bits per second
CDMDA	channel demodulator and message decoder assemblies
CMOS	Complementary Metal Oxide Semiconductor
J/S	Jammer to Signal Ratio
C/N_0	carrier to noise density
CPSM	continuous phase shift modulation
CT	continuous telemetry
EBS	electronic bombardment semiconductor
ECM	electronic countermeasures
ECCM	electronic counter-countermeasures
FDM	frequency division multiplex
FDMA	frequency division multiple access
FEBA	forward edge of the battle area
FH	frequency hop
GCS	Ground Control Station
GSS	Ground Slave Station
IC	integrated circuit
ICNI	Integrated, communications, navigation, and identification
IF	intermediate frequency
LPF	low pass filter
LSI	large scale integrated circuits
MGCS	Master Ground Control Station
MSI	medium scale integration devices
OSC	oscillator
PA	power amplifier
PC	probability of communication
PFA	probability of false message acceptance
PME	prime mission equipment
PN	pseudo noise
PSK	phase shift key
RCV	remotely controlled vehicle
RF	radio frequency
RX	receiver
SGS	slave ground station
SNR	signal to noise ratio
S/N	signal to noise ratio
SSI	small scale integration devices
TATS	Tactical Satellite Modulator/Demodulator
TCM	timing and control modules
TDM	time division multiplex
TDMA	time division multiple access
TH	time hop
TTL	transistor-transistor logic
TX	transmitter

VCO	voltage controlled oscillator
V&T	video and telemetry
WCCM	Wideband Command and Control Modem
2 CPSM	binary continuous phase shift modulation