AD-756 449

EXPLORATORY DEVELOPMENT TO SHOW TECHNICAL FEASIBILITY OF AUTOMATIC FABRICATION OF SPECTACLE LENSES IN THE FIELD

J. T. Celentano, et al

Life Systems Research Institute

Prepared for:

Army Medical Research and Development Command

19 March 1971

DISTRIBUTED BY:

NTIS

National Technical Information Service
U. S. DEPARTMENT OF COMMERCE
5285 Port Royal Road, Springfield Va. 22151

Aug 70 - 15 Feb 71

AD756449

EXPLORATORY DEVELOPMENT TO SHOW TECHNICAL FEASIBILITY OF AUTOMATIC FABRICATION OF SPECTACLE LENSES IN THE FIELD

J. T. CELENTANO, M.D.

Q. Y. CHANG

M. GRESHES

G. N. HOOVER, PH.D.

DDC
RECEIVED
MAR 7 1971
B

Approved for public release;
distribution unlimited

U. S. ARMY MEDICAL RESEARCH AND DEVELOPMENT COMMAND

CONTRACT DADA17-71-C-1006

Reproduced by
NATIONAL TECHNICAL
INFORMATION SERVICE
U S Department of Commerce
Springfield VA 22151

LIFE SYSTEMS RESEARCH INSTITUTE

69

DOCUMENT CONTROL DATA - R & D

(Security classification of title, body of abstract and indexing annotation must be entered when the overall report is classified)

1. ORIGINATING ACTIVITY (Corporate author)

Life Systems Research Institute
Los Angeles, California 90067

2a. REPORT SECURITY CLASSIFICATION

2b. GROUP

3. REPORT TITLE

Exploratory Development to Show Technical Feasibility of Automatic Fabrication of Spectacle Lenses in the Field

4. DESCRIPTIVE NOTES (Type of report and inclusive dates)

Technical Report 15 August 1970 to 15 February 1971

5. AUTHOR(S) (First name, middle initial, last name)

J. T. Celentano, M.D.

6. REPORT DATE

19 March 1971

7a. TOTAL NO. OF PAGES

60

7b. NO. OF REFS

8a. CONTRACT OR GRANT NO.

DADA17-71-C-1006

b. PROJECT NO.

c.

d.

9a. ORIGINATOR'S REPORT NUMBER(S)

9b. OTHER REPORT NO(S) (Any other numbers that may be assigned this report)

10. DISTRIBUTION STATEMENT

Approved for public release; distribution unlimited

11. SUPPLEMENTARY NOTES

12. SPONSORING MILITARY ACTIVITY

US Army Medical Research and Development Command, Washington, DC 20314

13. ABSTRACT

The report covers effort conducted under three tasks: Material Development; Design Analyses; and Breadboard Studies. The materials development was directed toward the development of a polycarbonate ophthalmic lens coated with an abrasion resistant material. ~~Effort was accomplished toward the formulation of~~ epoxymelamine coatings, ~~as well as evaluating~~ commercial coatings were evaluated. The design analyses were twofold. First, a requirements analysis was conducted to establish physiologic, ophthalmic, optical, and military requirements. Second, system requirements were analyzed, leading from the project goals to the development of a preliminary design. Breadboard studies were begun ~~especially~~ to evaluate mold materials, method, and the various types and grades of polycarbonate. Compression molding processes for polycarbonate were ~~extensively~~ evaluated leading to the development of an acceptable breadboard molding cycle. Breadboard compression molding equipment was put into operation. Trial lenses were produced and evaluated.

Ia

DD FORM 1 NOV 65 1473 REPLACES DD FORM 1473, 1 JAN 64, WHICH IS OBSOLETE FOR ARMY USE.

Security Classification

Security Classification

14. KEY WORDS	LINK A ROLE	LINK A WT	LINK B ROLE	LINK B WT	LINK C ROLE	LINK C WT
Fabrication Spectacle lens epoxymelamine coatings polycarbonate						

Ib

Security Classification

71R118

EXPLORATORY DEVELOPMENT TO SHOW TECHNICAL FEASIBILITY OF AUTOMATIC FABRICATION OF SPECTACLE LENSES IN THE FIELD

FIRST TECHNICAL SUMMARY REPORT

J. T. CELENTANO, M.D.
Q. Y. CHANG
M. GRESHES
G. N. HOOVER, PH.D.

19 March 1971

U.S. ARMY MEDICAL RESEARCH AND DEVELOPMENT COMMAND
CONTRACT DADA17-71-C-1006

LIFE SYSTEMS RESEARCH INSTITUTE
1900 Avenue of the Stars, Suite 755
Los Angeles, California 90067

I

FOREWORD

This is the first technical summary report of a study entitled "Exploratory Development to Show Technical Feasibility of Automatic Fabrication of Spectacle Lenses in the Field." The report is submitted by Life Systems Research Institute to the U. S. Army Medical Research and Development Command under Contract DADA17-71-C-1006, 15 August 1970, and in accordance with the Delivery "Item 2" of the Life Systems Research Institute proposal dated 1 April 1970 and revised proposal dated 4 September 1970.

The report covers the period 15 August 1970 to 15 February 1971. Effort was conducted under three tasks: Materials Development; Design Analyses; and Breadboard Studies. The work was performed by the staff of Life Systems Research Institute at its offices and laboratory and model shop in Los Angeles and by Life Systems Research Institute's subcontractor, M. Greshes and Associates, at his facility in New York.

Dr. J. T. Celentano is the Principal Investigator and Project Manager for the study. Mr. Q. Y. Chang is the Project Engineer. Mr. M. Greshes is responsible for material development.

TABLE OF CONTENTS

	Page
FOREWORD	ii
ABSTRACT	iii
LIST OF FIGURES	vi
LIST OF TABLES	v
INTRODUCTION	1
MAJOR CONCLUSIONS OF INITIAL STUDY PROJECT	1
MATERIALS	1
TECHNIQUES	2
RECOMMENDATIONS FOR EXPLORATORY DEVELOPMENT	2
DEVELOPMENT PLAN	3
REQUIREMENTS ANALYSIS	5
REFRACTION STUDIES	5
DISTRIBUTION OF ARMY REFRACTIONS	5
REFRACTION IN 0.5D STEPS	5
CURRENT FIELD OPTICAL SUPPORT	13
FRAME EVALUATION	13
FRAME CONCEPTS	13
FRAME CHARACTERISTICS	17
CONTACT LENSES	19
DISCUSSION OF ANALYSES	20

Preceding page blank

TABLE OF CONTENTS--Continued

	Page
SYSTEM DESIGN	22
SYSTEM SPECIFICATION	22
PRE-PROTOTYPE PRELIMINARY DESIGN	23
MOLD REQUIREMENTS	29
MOLD ASSEMBLIES FOR TROOPS SUPPORTED	29
MOLDS TO MEET REFRACTION DEMANDS	31
MOLD MATERIALS	35
MOLD AND LENS CONFIGURATIONS	35
LENS VOLUME/WEIGHT DETERMINATIONS	38
MATERIALS AND BREADBOARD STUDIES	41
MATERIALS DEVELOPMENT	41
SUMMARY OF RESULTS	41
EPOXY-MELAMINE EVALUATION	41
GLASS-RESIN POLYMER COATING	42
LITERATURE SURVEY	46
BREADBOARD STUDIES	47
SUMMARY OF RESULTS	47
MOLD DESIGN AND MANUFACTURE	48
POLYCARBONATE EVALUATION	49
GENERAL COMPRESSION MOLDING TECHNIQUE	51
MOLDING CYCLES AND CHARACTERISTICS	53

LIST OF FIGURES

		Page
1.	Percent Distribution Versus Lens Refractions. Fitzsimons General Hospital Data.	6
2.	Percent Distribution Versus Lens Refractions. Fort Leonard Wood Data.	8
3.	Percent Distribution Versus Lens Refractions for All Data.	10
4.	Major Subsystems Identification for Pre-Prototype Model	24
5.	Control Subsystem Schematic of Pre-Prototype Model	25
6.	Electromechanical Subsystem Schematic of Pre-Prototype Model	26
7.	Basic Mold Assembly	27
8.	Basic Compression Mold System	28
9.	Lens Configuration and Shapes	36
10.	Typical Process Data Sheet	60

LIST OF TABLES

		Page
1.	Distribution of Single Vision Lenses Dispensed at Fitzsimons General Hospital	7
2.	Distribution of Single Vision Lenses Dispensed at Fort Leonard Wood	9
3.	Distribution of Single Vision Lenses by Percent - 16,416 Consecutive Pairs	11
4.	Distribution of Lenses Stocked by 8-500 Team GA, Optical Detachment	14
5.	Distribution of Lenses Stocked by 8-500 Team GB, Optical Detachment Augmentation	15
6.	Frame Design Analysis	18
7.	Mold Combinations for Prescribed Refractions	32
8.	Mold Combinations for Prescribed Refractions	33
9.	Recap of Mold Combinations	34
10.	Radii of Dioptic Curves	37
11.	Various Lens Thickness for 60 mm Round Polycarbonate Lenses	39
12.	Summary of Epoxies Tested	43
13.	Summary of Epoxy-Melamines Tested	44
14.	Coatings Tested	45
15.	Typical Results of Polycarbonate Evaluation	50
16.	Major Problems, Causes, and Remedies in Compression Molding	54
17.	Typical Test Run of One Cycle Characteristic--Pressure	58
18.	Defective Lens or Process	59

INTRODUCTION

One of the important problems for the Army in the field is that of visual defects of the individual soldier. Since thirty-five percent of the eligible youth need visual correction, this represents a significant segment of the military population. The life of a pair of spectacles in the field situation is approximately two months. Current Optical Units are not able to provide rapid service in many cases and the large inventory required is a burden on the supply pipe-line. As great interest is being exhibited nationally about safety eyewear, it is natural that a project, conceived over six years ago to provide rapidly such eyewear in the field, should be of great importance at this time.

In order to provide a solution to this problem, a DA-QMDO for Lens, Spectacle, Field Fabrication, Automatic, CDOG Paragraph 1412b(18) was authorized. This QMDO is directed toward the development of a system for the automated fabrication of spectacle lenses in the field. The goal being a system which required little training to operate, is reliable, easily maintainable, will require only the smallest inventory, will rapidly fabricate spectacle lenses, and can be carried on a military 1/4-ton truck, will fabricate spectacles to a prescription carried by the soldier, such as on his dog tag, and have lenses of impact resistant plastic, tinted as required, and moisture and scratch resistant insofar as possible. A study to perform the first segment of the feasibility evaluation was undertaken under USAMR&DC Contract DADA17-69-C-9062.

MAJOR CONCLUSIONS OF INITIAL STUDY PROJECT

Materials

The crux of the problem of the feasibility of a system for fabricating spectacle lenses in the field is materials. For the reasons indicated, glass lenses are unacceptable and should not be considered further.

Commercial plastic lenses are made almost exclusively of allyl diglycol carbonate (ADC). This material is unsuitable due to its long cure time. Abrasion resistance is the most pressing problem and even ADC is just passable. There are many materials with as good properties as ADC except for abrasion resistance. Elastomers of silicone and urethane have excellent abrasion resistance, but these are flexible and unacceptable. Rigid silicones are unacceptable due to brittleness. Urethane sheets have the greatest abrasion resistance but are unacceptable due to the high haze factor. Epoxies have poor abrasion resistance, but otherwise possess excellent properties, and can be rapidly compression molded.

There are several plastic coating materials which impart an abrasion resistance as good as ADC or better. Silicone, silicone glass, and ADC compounded coatings all provide a highly acceptable lens. The basic material can be polycarbonate, acrylic, or polyester. The most significant problem with coated lenses is the time of drying which significantly increases the time of lens production. New developments, or extensions of those underway, could eliminate the need for a coating. With the rapidity of change in the plastics industry, this is to be expected, since no breakthroughs are involved.

Techniques

Of all the techniques for processing plastics, only a few have merit for a field lens fabrication system. Casting and compression molding are the only acceptable methods of processing thermosetting materials. The epoxies, allyl additives, silicones, and urethanes are candidates for casting and compression molding. Thermoplastic materials are usually injection molded; however, this process is unacceptable for field lens fabrication. The urethanes are candidate for compression molding, as well as coated acrylics and polycarbonates.

RECOMMENDATIONS FOR EXPLORATORY DEVELOPMENT

With the results of the initial study project as a guide, a series of recommendations was made for exploratory development to demonstrate technical feasibility of automatic fabrication of spectacle lenses in the field.

1. Materials evaluation should continue with the intent that a single material will become available with adequate abrasion resistance. Investigation should be concentrated on epoxies, polycarbonates, silicones, and urethanes.

2. Investigation of a coated lens with a polycarbonate base should be pursued as the near term goal, with decreasing time of curing an important consideration.

3. System should use compression molding as the fabrication technique of choice. Preforming should be considered as a means of reducing cure time.

4. Moldless or variable mold systems should be pursued at least to establish feasibility.

5. Although it is possible to develop an integral lens and frame—one that is molded in one piece, the complexity of this operation may push the limit of simple and unencumbered equipment and should not be used if it will delay development.

6. To pursue a multi-mold system, a tolerance of 1/2 Diopter ($\pm$ 1/4 Diopter) should be considered and that $\pm$8 Diopters be the prescription limits. In addition, only one shape of lens is recommended — preferably circular. In this way the complexity of the field lens fabrication system will be reduced due to the lesser number of molds and consequently, size, automation complexity, and repair and maintenance requirements will be reduced.

7. A pre-prototype breadboard system should be developed for field service primarily and materials development should be concurrently pursued during the early part of this development. The system should be initiated on the basis of coated lenses but provide for the noncoated lens as materials become available.

DEVELOPMENT PLAN

This is an exploratory development to demonstrate technical feasibility of automatic fabrication of spectacle lenses in the field. It will lead to the development of a pre-prototype breadboard model. The project should proceed according to the plan discussed in this section and will require two years to accomplish.

Initially the evaluation of materials will continue with completion of the coated lens development as the primary goal. Additionally, evaluation of materials will also continue toward development of a material that will not require a coating to achieve abrasion resistance and that can be rapidly casted or compression molded.

Concurrently with the material evaluation design analyses will begin. This in effect will reduce the results of the preliminary design studies already accomplished and develop specific design criteria, and design specifications for the pre-prototype system. Trade-off studies will be accomplished as required. Clinical evaluations will be accomplished as required. The results of the clinical study initiated by the Army ophthalmology technical advisor will also be utilized in the design analyses.

A laboratory breadboard of the prototype system will be developed. This will involve studies of the processes required in the operating system and the development of specific processes. Major components and units of the pre-prototype system will be constructed and a laboratory system breadboarded and evaluated.

A design of the pre-prototype system will be developed. The process development will be completed first and then the final design developed including: control system, electromechanical system, and power supply.

As materials and components are identified, the procurement process will begin, especially where a long lead time is involved. Once design is complete, the control and electromechanical subsystems will be fabricated, as also the power supply if required. The subsystems will be assembled into the finished system. Engineer tests will be accomplished on components, subsystems, and final assembly as required by the approved test plan, and an operational evaluation will be conducted.

During the fabrication period, operations and training materials will be developed. These materials will be developed in draft manual form and will provide for training of personnel for field evaluations. Staffing criteria will also be developed.

In addition to the foregoing, an evaluation of other methods for forming plastic lenses will continue. This will include a further evaluation of the moldless technique using a plastic membrane and the variable mold technique using a metal diaphragm. This will be conducted to establish whether these methods are sufficiently feasible to warrant further research and development by the Army at this time.

REQUIREMENTS ANALYSIS

REFRACTION STUDIES

Distribution of Army Refractions

To establish the requirements for corrective eyewear in the field, the U.S. Army Medical Optical and Maintenance Agency was requested to provide a breakdown of prescription lenses issued during a given period of time. The optical laboratory at Fitzsimons General Hospital in Denver supplied a breakdown of 10,651 pairs of single vision lenses dispensed consecutively. Fort Leonard Wood supplied similar data on 5,765 lens pairs. These data have been extracted in 1 Diopter steps, sphere x cylinder, and are presented in Tables 1 and 2 as percents of the total. Figure 1 is a topographical graph of the Fitzsimons General Hospital data. Table 3 combines both sets of data for a total of 16,416 pairs of spectacles consecutively issued by the Army in the United States. A comparison of Figure 1 with Figure 2, a topographical graph of the Fort Leonard Wood data, shows a striking similarity. Figure 3 is the combined data and no basic differences are noted. As both samples were drawn from the general military population in the CONUS, field units would be expected to have a narrower grouping due to the younger median age. Thus, it is concluded that this sample size adequately represents the extreme requirements of the Army in the field and can be used to predict spectacle prescription needs.

Refraction in 0.5D Steps

During the first phase of this feasibility study it was recommended that providing refractions in 0.5D steps would be highly desirable. Since a multiple mold machine was envisioned, it would be less complex and much smaller. For this reason, Colonel Budd Appleton, the senior technical advisor for this project and ophthalmology consultant to the Surgeon General, was asked to give his advice.

The following rationale was set forth:

> For these purposes spectacle prescriptions should be considered as cross-cylindrical lenses rather than sphero-cylinders. When so considered, all lenses fall into the following distribution:
>
> (1) Both meridians in half-diopters--25%
> (2) Only one meridian in a half-diopter--50%
> (3) Neither meridian in a half-diopter--25%
>
> If all prescriptions were converted to half-diopter steps, the following changes would be required:

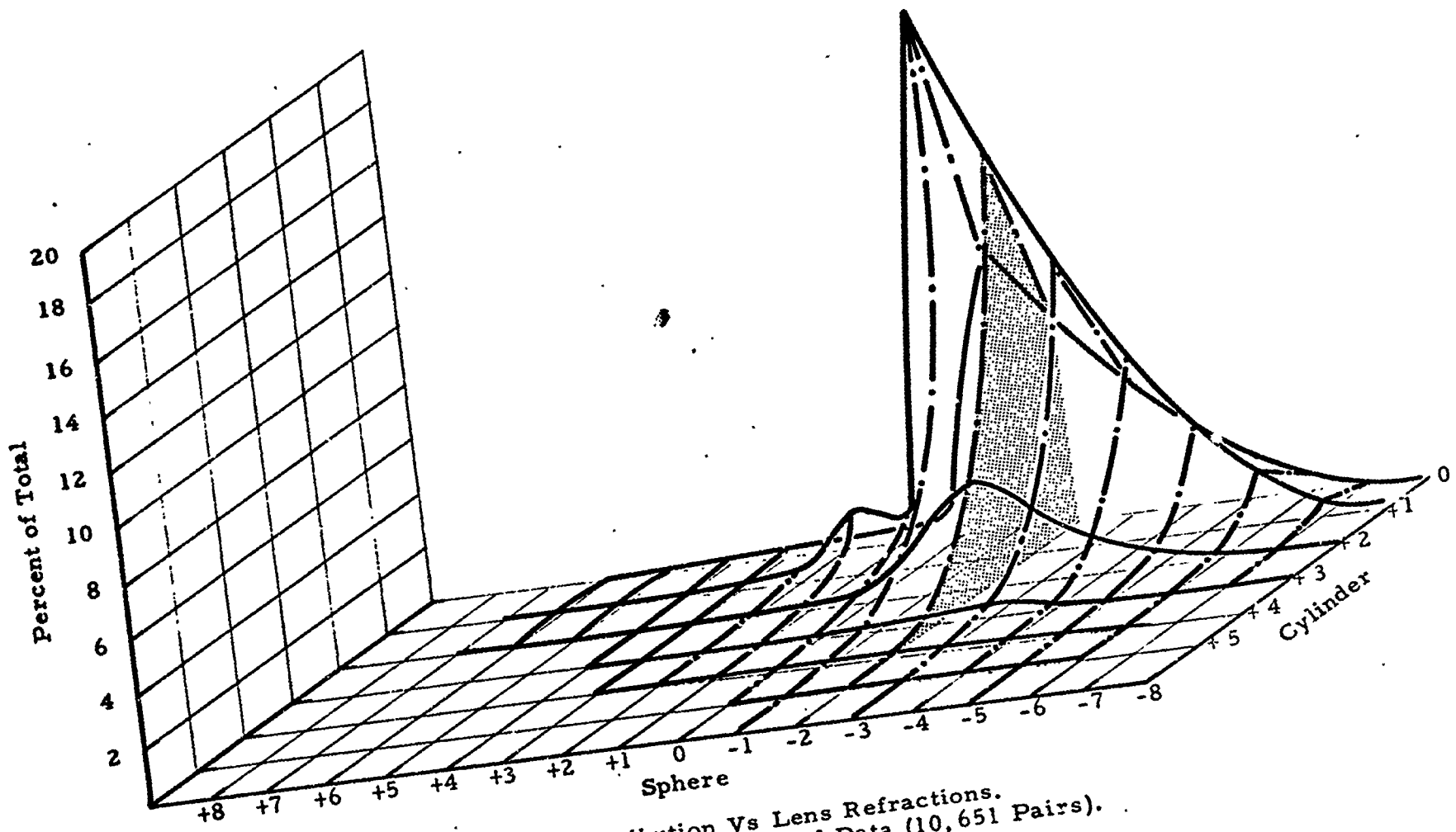

Figure 1. Percent Distribution Vs Lens Refractions. Fitzsimons General Hospital Data (10,651 Pairs).

Table 1

Distribution of Single Vision Lenses Dispensed At Fitzsimons General Hospital

(10,651 Consecutive Pairs Listed As Percent of Total)

Sphere	Cylinder 0	+1	+2	+3	+4	+5	+6	Total
+8								
+7		.01	.01					.02
+6	.12	.03	.07					.22
+5	.08	.11	.16					.35
+4	.26	.14	.08	.05				.53
+3	.31	.22	.10	.01	.03			.67
+2	.60	.34	.22	.05	.02		.01	1.24
+1	.72	2.18	.34	.08				3.32
0	.38	1.98	.47	.14	.09	.01		3.07
-1	10.38	18.15	2.07	.12	.08	.04	.02	30.86
-2	8.63	14.13	3.42	.23	.19	.02		26.62
-3	4.38	8.15	1.85	.75	.08	.07	.03	15.31
-4	2.30	4.84	1.24	.39	.16	.02		8.95
-5	1.26	2.88	.68	.19	.02	.01	.01	3.79
-6	.54	1.72	.43	.04	.06	.01		2.80
-7	.20	.56	.10	.04				.90
-8	.08	.03	.02					.13
Total	30.24	55.47	11.26	2.09	.73	.18	.07	

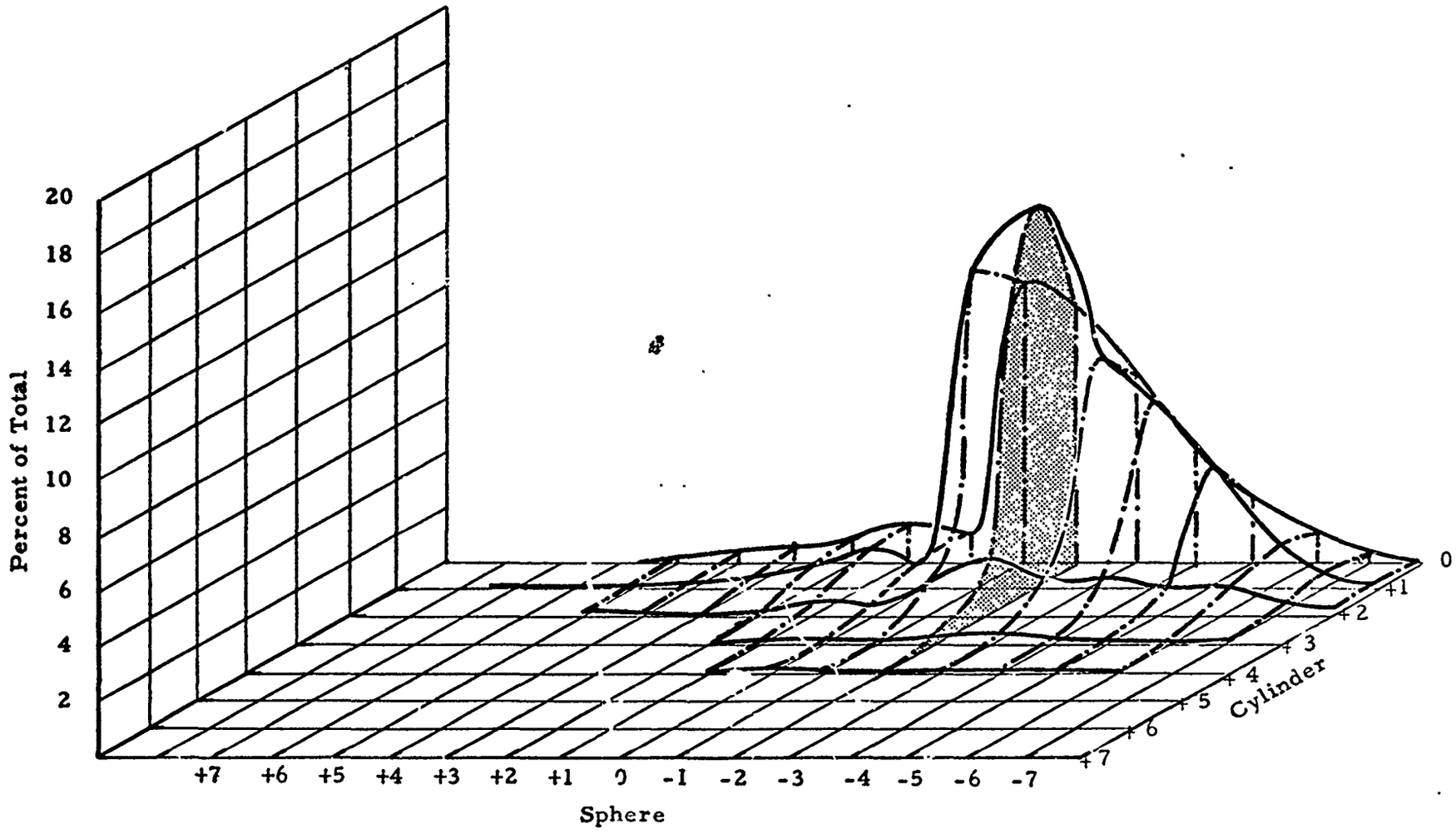

Figure 2. Percent Distribution Vs Lens Refractions.
Ft. Leonard Wood Data (5,765 Pairs).

Table 2

Distribution of Single Vision Lenses Dispensed
At Fort Leonard Wood

(5765 Consecutive Pairs Listed as Percent of Total)

Sphere	Cylinder 0	+1	+2	+3	+4	+5	Total
+8							
+7	.04	.09	.05				.18
+6	-	.04	.03	.02			.09
+5	.10	.09	.21	.04			.44
+4	.15	.22	.13	-	.04		.54
+3	.43	.42	.12	.03			1.00
+2	.78	.66	.20	.08	.01		1.73
+1	1.25	1.40	.38	.18	.09		3.30
0	1.07	.76	.19	.08	.04	.03	2.17
-1	10.41	11.51	1.14	.23	.13	.05	23.47
-2	9.40	14.44	2.37	.42	.17	.04	26.84
-3	6.27	8.46	1.40	.40	.10	.05	16.68
-4	2.85	5.98	1.71	.31	.17	.05	11.07
-5	1.84	3.95	1.24	.16	.09	.04	7.32
-6	.80	1.37	1.08	.15	.07	.09	3.56
-7	.32	.65	.30	.10	.03	.01	1.41
-8	.07	.16	.02	-	.01	.01	.27
Total	35.78	50.20	10.57	2.20	.95	.37	

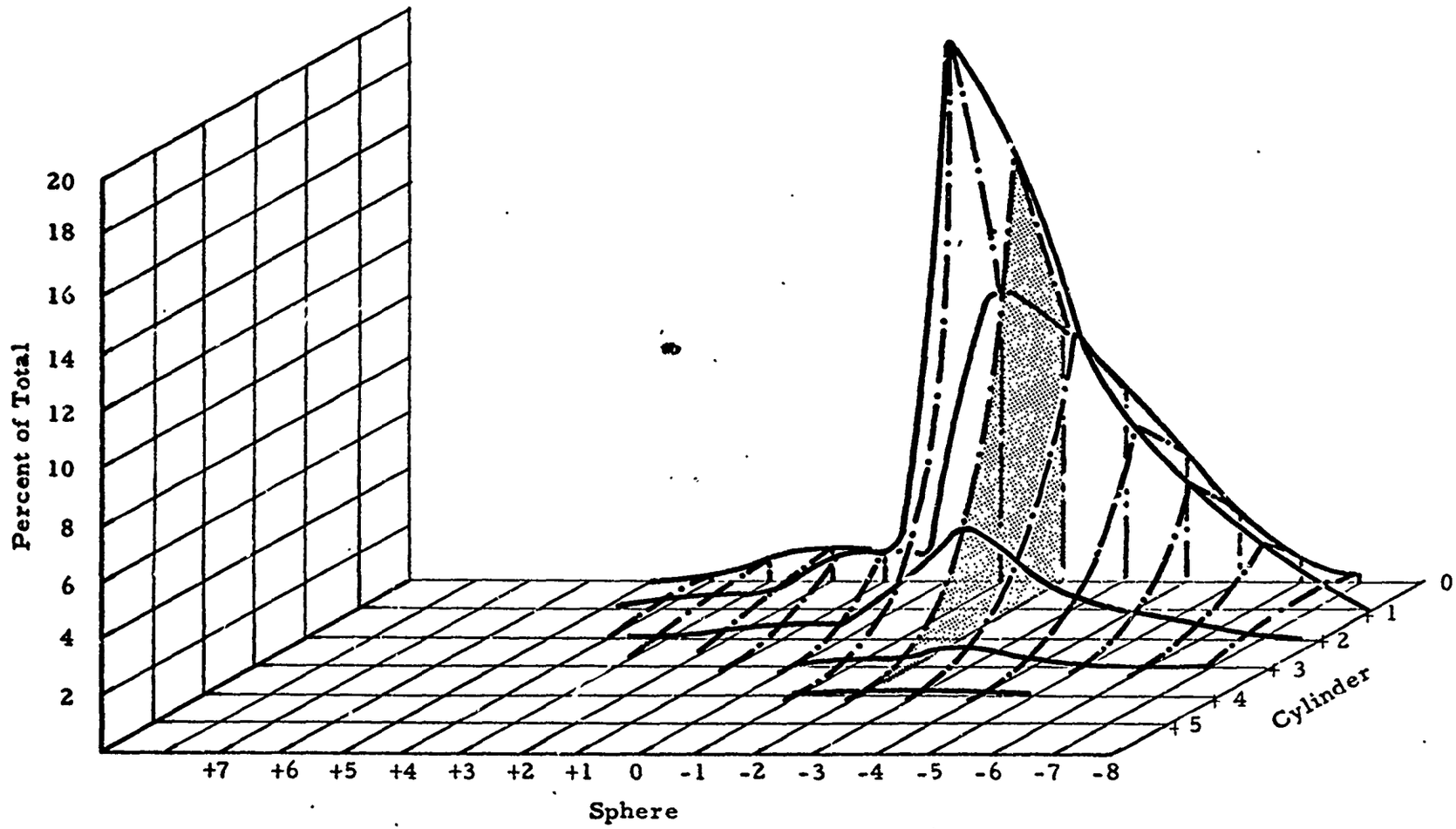

Figure 3. Percent Distribution Vs Lens Refractions for All Data (16,416 Pairs).

Table 3

Distribution of Single Vision Lenses
By Percent--16,416 Consecutive Pairs
(Fitzsimons General Hospital and Fort Leonard Wood Combined)

Sphere	Cylinder 0	+1	+2	+3	+4	+5	+6	Total
+7	.02	.04	.02					.08
+6	.08	.03	.05	.01				.17
+5	.09	.10	.18	.02				.38
+4	.22	.17	.10	.03	.02			.53
+3	.35	.29	.11	.02	.02			.76
+2	.67	.45	.21	.06	.02			1.41
+1	.91	1.90	.35	.11	-			3.56
0	.62	1.55	.37	.12	.02			2.76
-1	10.39	15.82	1.74	.16	.04	.02	.02	28.26
-2	8.90	14.24	3.05	.29	.18	.02		26.69
-3	5.04	8.26	1.69	.63	.09	.06	.02	15.80
-4	2.49	5.24	1.40	.37	.16	.03		9.70
-5	1.46	3.26	.86	.18	.04	.02	.01	5.82
-6	.63	1.60	.66	.08	.06	.04		3.06
-7	.24	.59	.17	.06	.01	-		1.08
-8	.08	.08	.02	-	-	-		.18
Total	32.21	53.63	10.99	2.11	.78	.23	.05	

(1) 25% of all prescriptions--no change
(2) 50% of all prescriptions--a quarter-diopter change in one meridian only
(3) 25% of all prescriptions--a quarter-diopter change in both meridians

With respect to the 50% requiring a quarter-diopter change in one meridian, this will be a quarter-diopter change in the astigmatic correction only. With respect to the 25% requiring a quarter-diopter change in both meridians, this will actually be a quarter-diopter change in the sphere only.

In any case, all quarter-diopter changes should be in the direction of under-correction.

Col. Appleton suggested that these changes should not cause a significant increase in the rejection rate of lenses so prescribed. He further proposed to undertake a pilot study relative to this point. This was to be a double blind study accomplished at the Walter Reed Eye Clinic.

125 consecutive spectacle prescriptions were selected. As proposed above, all meridians in quarter-diopter steps were changed to half-diopter steps in such a way that the spherical equivalent was kept as close to the original as possible. Those already in half-diopter steps were left alone. This was done by the dispensing optician; neither the optometrist or ophthalmologist or the patient was aware of it.

Approximately one month after the lenses were dispensed, patients were called and queried as to the acceptability of their spectacles, specifically seeking complaints which might be referrable to overcorrecting or undercorrecting as a result of the changes.

The results of this survey are as follows:

(1) 91 of the original 125 were able to give opinions of their new glasses based on having worn them. The rest either had not worn the glasses enough to express an opinion or could not be contacted by telephone.

(2) 45 patients had spectacles in which changes had been made in both lenses. Of this group, 10 expressed complaints about their prescription.

(3) 31 patients had spectacles in which changes had been made in only one lens. Of this group, 5 expressed complaints about their prescription.

(4) 15 patients had spectacles in which neither lens had been changed. Of this group, 6 expressed complaints about their prescription.

(5) Although widespread dissatisfaction with existing military

spectacle frames was expressed and noted in the survey, this was not included as a complaint referable to the prescription.

CURRENT FIELD OPTICAL SUPPORT

The current 8-500 Team G.A., Optical Detachment, provides presurfaced single vision and special type spectacle (except multifocal) prescription fabrication and repair services for an estimated force of 75,000 men. This team is considered 100 percent mobile. It is supported by a 2-1/2 ton truck, a 3/4 ton truck, and a 1-1/2 ton trainer carrying 1100 lbs of equipment in about 40 cu ft. Team GA is authorized 6 enlisted men and one officer.

Team GA is authorized one Optical Fabrication Unit, Semi-mobile (FSN 6545-292-9683). In addition to the necessary tools for field fabrication of spectacles, this kit includes 4040 single vision crown glass finished lens pairs of various prescriptions, 762 semifinished blanks of various base curves, 1872 assembled frames, 2944 fronts and 2080 temples. Table 4 lists the breakdown in percent by 1 Diopter steps of the finished lenses included in the kit. Comparison of the frequency (percentage) distribution of Table 4 with that of those recently issued in CONUS (table 3) shows fairly good agreement between +6 and -6 Diopter cylinder lenses.

The 8-500 Team GB, Optical Detachment Augmentation, provides almost the same capability as Team GA for an estimated force of 10,000. This unit is also fully mobile, is authorized two enlisted men and is supported by a 3/4 ton truck and 400 lbs of equipment.

Team GB is authorized one Optical Fabrication Unit, Portable, (FSN 6545-931-5130). This unit does not have the capability of finishing (grinding and polishing) semi-finished blanks. It does, however, carry 1119 finished single vision crown glass lens pairs. As in Table 4, these lens combinations are listed in Table 5. The portable unit also contains 360 assembled frames, 560 fronts, and 552 temples. This unit is similar to the semimobile unit in its comparison to the observed data.

FRAME EVALUATION

Frame Concepts

The frame has two basic functions: to support the lenses on the face in a stable and comfortable manner, and to hold the lenses in proper alignment at the proper separation. To accomplish these purposes modern frames vary in the dimensions of bridge opening, eye size, and temple length. Of primary interest for field use is the range of frame sizes and their frequency in the male population. They are:

Table 4

Distribution of Lenses Stocked
By 8-500 Team GA, Optical Detachment
(4040 Pairs of Finished Single Vision Lenses Listed as Percent of Total)

Sphere	Cylinder 0	+1	+2	+3	+4	+5	+6	Total
+8	.02							.02
+7	.05	.05						.10
+6	.07	.10	.10	.02				.29
+5	.20	.40	.40	.17	.02			1.19
+4	.50	.40	.40	.30	.20			1.80
+3	.99	.69	.40	.30	.20			2.58
+2	2.48	1.58	.99	.30	.20			5.55
+1	2.48	1.98	1.19	.30	.20			6.15
0	.62	2.48	1.73	.50	.30	.20	.05	5.88
-1	9.90	9.90	1.98	1.19	.40			23.37
-2	7.43	9.90	1.98	1.19	.40			20.90
-3	4.95	3.96	1.98	1.19	.40			12.48
-4	2.48	1.98	1.19	.79	.40			6.84
-5	2.48	1.98	1.19	.79	.17			6.61
-6	1.49	1.98	.30	.10	.10			3.97
-7	.62	1.06	.15	.05	.05			1.93
-8	.15	.05	.10	.05	.05			.40
Total	36.91	38.49	12.91	7.24	3.09	.20	.05	

Table 5

Distribution of Lenses Stocked
By 8-500 Team GB, Optical Detachment Augmentation
(1119 Pairs of Finished Single Vision Lenses Listed as Percent of Total)

Sphere	Cylinder 0	+1	+ 2	+3	+4	+5	+6	Total
+8	.18							.18
+7	.18	.18						.36
+6	.18	.36	.36	.09				.99
+5	.36	1.43	1.43	.63	.09			3.94
+4	.36	1.43	1.43	1.07	.71			5.00
+3	.71	1.43	1.43	1.07	.71			5.35
+2	1.79	1.43	1.43	1.07	.71			6.43
+1	1.79	1.43	1.43	1.43	.71			6.79
0	.45	1.79	1.25	.36	.36	.36	.18	4.74
-1	7.15	7.15	1.43	1.43	1.43			18.59
-2	5.36	7.15	1.43	1.43	1.43			16.80
-3	3.57	2.86	1.43	1.43	1.43			10.72
-4	1.79	1.43	1.43	1.43	1.43			7.51
-5	1.79	1.43	1.43	1.16	.63			6.43
-6	1.07	1.43	.36	.36	.36			3.51
-7	.45	.80	.18	.18				1.79
-8	.18	.09	.18	.18	.18			.80
Total	27.36	31.82	16.63	13.32	10.36	.36	.18	

Eye Size (mm)	Bridge Opening (mm)	Percent Usage
44	20	7.7
44	22	11.6
46	20	9.4
46	22	33.1
46	24	11.7
48	20	3.9
48	22	14.1
48	24	8.5

Common temple lengths are:

Temple Length	Percent Usage
198 mm (5.5 inch)	15.0
215 mm (5.75 inch)	60.0
235 mm (6.0 inch)	25.0

The average interpupillary distance is 62.7 $\pm$ 38 mm with a dynamic range of 47 to 79 mm.

Also of importance to the design concept is the material of which the frames are made. Basically, the only practical materials are either a metal or a plastic. Suffice it to say tha strength, lightness in weight, ease of manufacture will be among the major specification items. While metals possess characteristics which would prevent or greatly reduce frame breakage, they are less flexible in their assembly and fitting. Wire type frames will not be considered, although they are easy to fit, they are not sufficiently durable for field use. Plastics, while not nearly as st. ..g as metal, do possess sufficient strength under most conditions of use. Plastics also are more malleable than metals and, hence, are easier to fit. Plastic frames can be manufactured in the field if trade-off studies indicate that the added machine complexity is warrented.

As indicated in the tables above, if standard frames are to be used eight frame sizes and three temple sizes must be provided to assure proper fit for most personnel. To eliminate this logistics problem, frame adjustability should be utilized.

Prevention of loss, especially for the combat situation, is essential. For most routine activities snug--but not tight--fit of the temples will be adequate. However, vigorous activities require additional restraint to prevent loss. Increasing the length of the temple pieces and fitting them around the occipital area might further prevent loss. However, it would appear that this approach would not be comfortable and would require a very careful fit. An adjustable elastic band attached to the temples and passing behind the head would appear to have the best possibilities. This type of eyeglass restraint has been used in various forms of athletics. The greatest complaint about them is excess pressure on the bridge piece.

Protection of the eye from flying debris is also an important function of the eyeglasses. Plastic lenses in a standard frame will protect the eye from objects approaching the eye, along the visual axis. However, at angles approaching 50° or greater in a lateral direction from the visual axis (depending upon the size of the lens) injury to the eye and/or surrounding tissue is likely. This type of injury may be prevented by adding a triangular shaped piece of clear plastic to the temple with the base of the triangle corresponding to the edge of the lens.

Another suggested solution to the safety factor is the use of "wrap-around" lenses. That is, lenses which curve toward the temples with the temple pieces and hinges attaching nearer the ear. However, as the lens curves toward the temple, visual distortion occurs and cannot be corrected without an unreasonable lens thickness.

Goggles have also been considered as one frame concept in that certain military specialties require their use. Where corrective lenses are required for these specialties (e.g., tank crews) compatibility of the field fabricated lens and the goggle will be required.

Contact lenses have been added to the analysis list primarily for comparison purposes, not as a serious consideration.

Frame Characteristics

As part of the design analysis the characteristics of the various frame concepts which affect the comfort, utility and field manufacture were evaluated against a combination of the various design concepts using the rating scale method. These characteristics were:

- Wearer Acceptability
- Comfort
- Ease of Assembly
- Ease of Fit
- Lack of Blindspots

Table 6. Frame Design Analysis

Rating Factors for Concepts:

0 = Poor
1 = Acceptable
2 = Average
3 = Good
4 = Excellent

Scaling Factors for Characteristics:

5 = Critical
4 = Major Importance
3 = Necessary
2 = Not Essential
1 = Nice to Have

Characteristics	Scaling Factor	Standard-Metal	Standard-Metal-Elastic Retainer	Standard-Metal-Safety Temple	Standard-Metal-Elastic Retainer-Safety Temple	Standard-Plastic	Standard-Plastic-Elastic Retainer	Standard-Plastic-Safety Temple	Standard-Plastic-Elastic Retainer-Safety Temple	Adjustable-Metal	Adjustable-Metal-Elastic Retainer	Adjustable-Metal-Safety Temple	Adjustable-Metal-Elastic Retainer-Safety Temple	Adjustable-Plastic	Adjustable-Plastic-Elastic Retainer	Adjustable-Plastic-Safety Temple	Adjustable-Plastic-Elastic Retainer-Safety Temple	Wraparound-Plastic	Wraparound-Plastic-Elastic Retainer	Wraparound-Metal	Wraparound-Metal-Elastic Retainer	Goggles	Contact Lens
Wearer Acceptability	(3)	6	6	6	6	9	9	9	9	3	3	3	3	6	6	6	6	6	6	6	6	3	3
Comfort	(4)	12	12	12	12	12	12	12	12	8	8	8	8	8	8	8	8	4	4	4	4	4	4
Ease of Assembly	(5)	15	15	15	15	15	15	15	15	20	20	20	20	20	20	20	20	10	10	10	10	5	5
Ease of Fit	(5)	15	15	15	15	15	20	20	20	20	20	20	20	20	20	20	20	5	5	5	5	10	0
Lack of Blind Spots	(2)	2	2	2	2	2	2	2	2	2	2	2	2	2	2	2	2	8	8	8	8	0	8
Unrestricted Periph. Vision	(2)	6	6	6	6	6	6	6	6	6	6	6	6	6	6	6	6	2	2	2	2	0	8
No Distortion of Periph. Vision	(2)	8	8	8	8	8	8	8	8	8	8	8	8	8	8	8	8	0	0	0	0	0	8
Prevention of Injury	(3)	3	3	12	12	3	3	12	12	3	3	12	3	3	12	12	12	12	12	12	12	12	0
Breakage Resistance	(3)	12	12	12	12	6	6	6	6	12	12	12	6	6	6	6	6	9	6	12	12	12	12
Loss Prevention	(1)	0	4	0	4	0	4	0	4	0	4	0	0	4	0	4	4	0	4	0	4	4	0
Protects from Dust/Fumes	(1)	0	0	0	0	0	0	0	0	0	0	0	0	0	0	0	0	1	1	1	1	4	1
Field Manufacture	(1)	0	0	0	0	1	1	1	1	0	0	0	0	0	0	0	0	0	0	0	0	0	0
Total Score	(32)	79	83	88	92	77	86	91	95	82	8[illegible]	91	95	79	83	88	92	57	58	59	64	54	49

- Unrestricted Peripheral Vision
- No Distortion of Peripheral Vision
- Prevention of Injury
- Breakage Resistance
- Loss Prevention
- Dust and Fume Protection
- Manufacture in the Field

The characteristics are self-explanatory; however, they do not all have equal importance. In the analysis a scaling factor was applied to give greatest weighting to the more important or critical factors and the least weighting to those which would be "nice to have."

Any combination of design concepts were rated from 0 to 4, with 0 for poor and 4 for excellent with respect to each frame characteristic. The rating was multiplied by the scaling factor for that characteristic and the product listed as the score. The results of these ratings are given in Table 6. A perfect score would be 128. The highest score was an adjustable metal frame with elastic retainer and safety temples, and the second highest score was a similar plastic version.

CONTACT LENSES

Although contact lenses are not provided to Army personnel for routine refractive errors the subject is frequently discussed. There is little information available concerning the use of contact lenses under conditions approaching field use. Since contact lenses could be fabricated in the field as easily as spectacle lenses it was considered important to learn something of the problems encountered in a fairly rigorous field type environment. With approval of the National Football League Commissioner, NFL team physicians were contacted relative to contact lens use. These would be contacts worn during practice and games. Results of the survey are presented below:

Team No.	Players Wearing	Lenses Lost During Season	Scleral Lenses	Wear Off Field	Injuries	Dirt Problem
1	7	5	0	6	1	Yes
2	5	10	0	4	0	
3	2	3	1	3	0	
4	4	2	0	1	0	
5	5	2	0	5	0	
6	?	1	?	1	0	Yes
7	2	1	1	2	0	
8	6	1	6	1	0	Yes
9	9	25	0	3	0	Some
10	6	12	2	3	0	Some
11	0	0	0	0	0	
12	3	2	0	2	0	
13	7	6	0	4	0	Yes
14	12	5	0	2	0	
	68	74	10	36	1	

Recap:

Response 13 of 26 teams = 50% 13 x 40 = 520
Number of players 13 x 40 = 520
Players wearing contacts = 13.1% of 520
Number of scleral contacts = 14.7% of 68
Players who wear contacts off field = 53% of 68
Number of injuries due to contact lens = 1 of 68 players
Problems due to dirt or other environmental contaminant as an eye irritant = 6 of 14 physicians complained
Lenses lost during season = 74% of 68 pairs = 54% of those worn. Almost all players have one to several extra pairs.

DISCUSSION OF ANALYSES

The foregoing analyses coupled with the studies accomplished during the Phase I effort provide a basis for a description of the requirements for spectacles for the Army in the field.

The range of powers is the first consideration. The provision of ± 8D sphere and +5D cylinder should cover the entire demand for spectacles in the field. It is worth noting for machine tradeoffs, however, that 98 percent coverage could be attained with ± 6D sphere and +3D cylinder, 95 percent with ± 5D sphere and +3D cylinder, and 90 percent with ± 4D sphere and +3D cylinder. Also, if powers were considered in equivalent sphere then there should logically be a reduction of the minus sphere limit of 1 Diopter for each 2D cylinder.

Providing lens refractions in 0.5D steps is important for machine design. This should be considered as a requirement unless shown to be an unacceptable compromise from the wearer viewpoint. It does not appear that this will be the case, however.

While military specifications allow only a small deviation from the actual prescription for a finished lens, a tolerance of ± 0.12D would be physiologically acceptable. Generally, however, there will be no variation from the mold, and deviation from the mold curve would not be expected. The cylinder axis tolerance will be accounted for by providing a round lens which can be rotated to the desired axis before mounting.

Prism errors would not be expected in the field but could be provided for within the limits of decentration if an oversize lens is fabricated. Undesired decentration could occur in fitting a large lens to a small P.D. This should be avoided by edging the lens. The size and shape of the lens has been the subject of considerable discussion during the project. A 42 mm round lens is the optimal configuration from a machine design standpoint. Physiologically it would be entirely adequate providing sufficient peripheral vision and would require no edging except for the very narrow P.D. Axis location requires only rotation of the lens before mounting. Cosmetically, such a lens might be unacceptable and would not allow prism decentration. A 60 mm round

lens edged to a nondesirable shape may be the solution.

The base curve is an important factor for machine complexity. While corrected curves are widely accepted in the optical industry there is considerable controversy about which curves to use, and thus there is much variation between companies. On the other hand, for the range of powers required here, standard base curves will be entirely acceptable physiologically and practically optically. Three base curves would provide the best fit: -6D base curve for 8 to 8D sphere, +6D for =0.25 to -5.00D sphere, and +3D for -5.25 to -8D sphere. The provision of + and -6D bases would be a good compromise. The least satisfactory but still physiologically tolerable would be just the +6D base curve.

The material for the lens will be a coated polycarbonate. Due to its great impact resistance and structural strength a minimum polar thickness of 2 mm will provide excellent protection and be extremely light. Since polycarbonate transmits ultraviolet radiation to a greater extent than crown glass, some tint may be required to reduce the UV transmission to 15 to 20 percent. This is to be determined later.

Frames should be adjustable providing for the combination of eye size, bridge size, pupillary distance and temple length given in the section on frames. Several adjustable basic models may be required. Frames should be plastic and may be fabricated by the machine. A tolerance of $\pm$ 0.5 mm P.D. is acceptable.

SYSTEM DESIGN

SYSTEM SPECIFICATION

This specification establishes the performance, design and test requirements for the Automatic Spectacle Lens Fabrication System (ASLFS). All system segments, elements and contract end items for this program shall conform to the requirements delineated herein.

The development of the ASLFS will provide the Army with an integrated system which will rapidly fabricate spectacles for soldiers in the field. The finished system will be of quality and capability sufficient for operational evaluation in the field, and which can be used as the basis for a production prototype.

The ASLFS utilizes multiple molds and the compression molding technique for fabricating plastic lenses of thermoplastic polycarbonate resin. These lenses will subsequently be coated with an abrasion resistant material as part of the system operation.

The system will provide for $\pm$ 8D sphere as the final surface and for $\pm$ 5D cylinder in 1/2D steps. A standard +6D base curve on the rear surface will be used as a minimum. Correction for prism will be included if decentration permits.

Adjustable frames will be supplied separately or fabricated separately by the system. The finished lenses will be mounted in the frames by the operator. Frames and lenses will be marked so that assembly can be simply, easily, and rapidly accomplished.

The system will consist of a control subsystem, an electro-mechanical subsystem and a power supply as described later. The system will be activated by a keyboard on which the prescription for both the R and L lenses will be entered.

The basic construction of the system and equipment required for the ASLFS must be simple and compact in design. It shall be sufficiently rugged to withstand normal use in the field. The ASLFS and all subsystems including peripheral equipment will be mounted and housed in a standard Army half-ton truck and be capable of set up in a fixed installation.

The ASLFS must be capable of being set up for operation in a minimum time. Procedures for operating the ASLFS must be simple, quick and precise. It shall provide full coverage within the optical ranges established and agreed upon by the Army project office.

Lenses will be round. If another shape is required then it

shall be edged from an oversize round lens as a separate external operation.

The ASLFS will have a design goal meantime to failure of operational time of three years with the acceptable requirements of two years with minimum maintenance required. The design life of the ASLFS shall be three to five years.

An Engineering Test and Evaluation shall be conducted to yield information necessary to determine the final design feasibility, adequacy of the basic design approaches, functional parameters, thermal and structural data, packaging and fabrication techniques and environmental criteria limitations.

Qualification Testing shall be conducted to verify design adequacy and demonstrate minimum level of equipment capability. The test shall be performed at the subsystem level or component level as required to detect any defects due to workmanship or design of the equipment and permit time for corrections prior to end use of the equipment.

Reliability Testing of the Lens Fabricator shall be laboratory tested for fabrication of "X" number pair of lenses or "X" number of hours in accordance with the approved test procedures under actual operational conditions with all equipment including redundent operating features.

To the greatest extent practicable, equipment shall be maintained by technicians without special training. Critical parts or units shall be plug-in or other replaceable types to the greatest extent practicable. Critical parts and assemblies shall be readily accessible without removing other critical parts or assemblies. No special tool shall be required for servicing or maintenance within this system.

PRE-PROTOTYPE PRELIMINARY DESIGN

The pre-prototype ASLFS preliminary design is schematically illustrated in Figures 4, 5, and 6. The overall system, indicated by Figure 4, consists of three subsystems: control, electromechanical, and power. The system will use multiple molds and the compression molding technique for providing polycarbonated coated lenses according to the system specification. The control subsystem provides all operational control of the system including operator communication with the system, and consists of a keyboard, buffer unit, and computer. The electromechanical subsystem provides the machine fabrication processes, including: the molds, heating and cooling, dehumidification of the plastic material, and the servo operations. The power subsystem will provide all power needs for independent operation.

The control subsystem is illustrated in further detail in the schematic of Figure 5. Communication with the system is accomplished

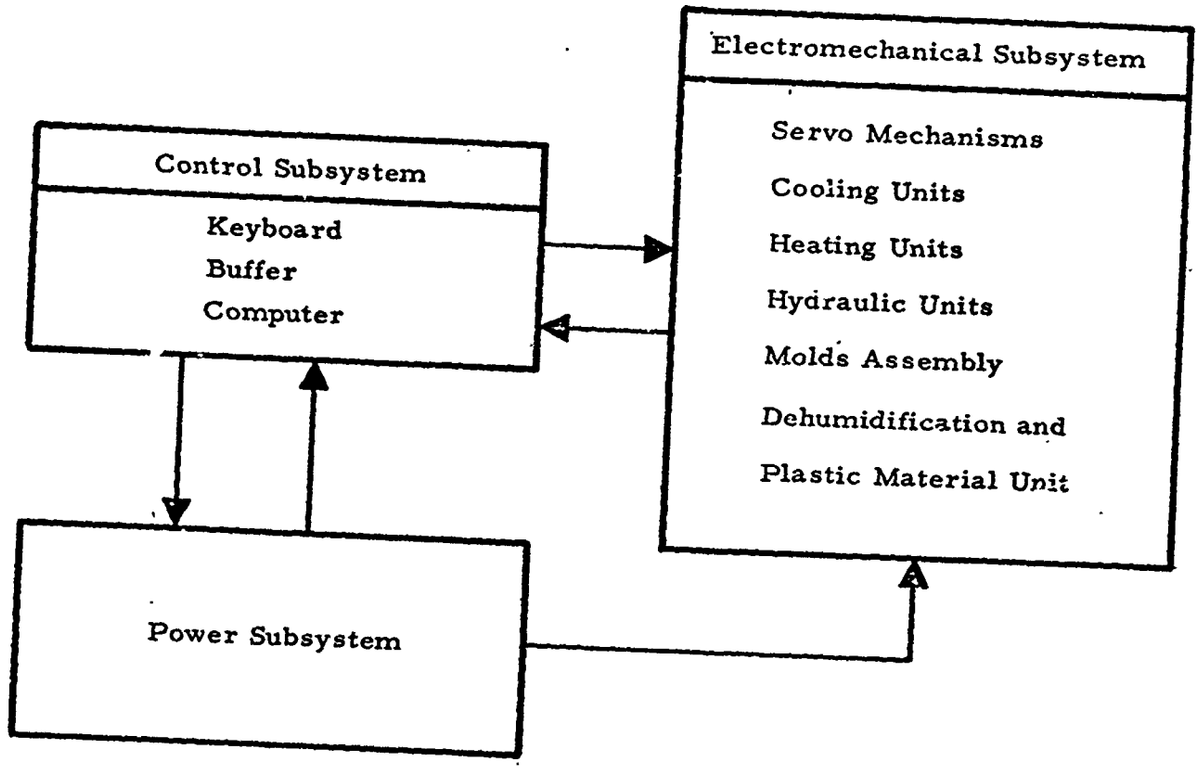

Figure 4. Major Subsystems Identification of Pre-Prototype Model

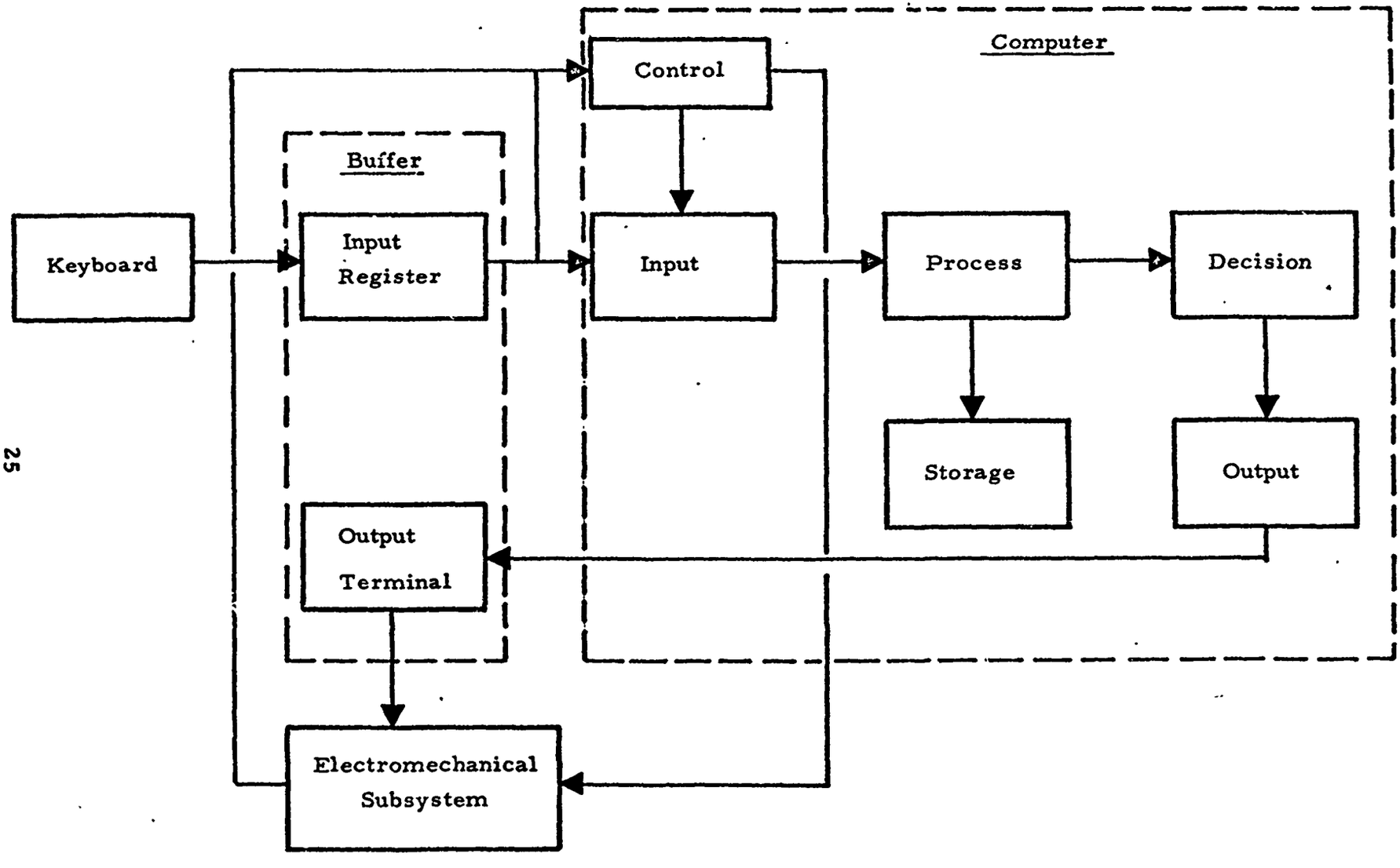

Figure 5. Control Subsystem Schematic of Pre-Prototype Model

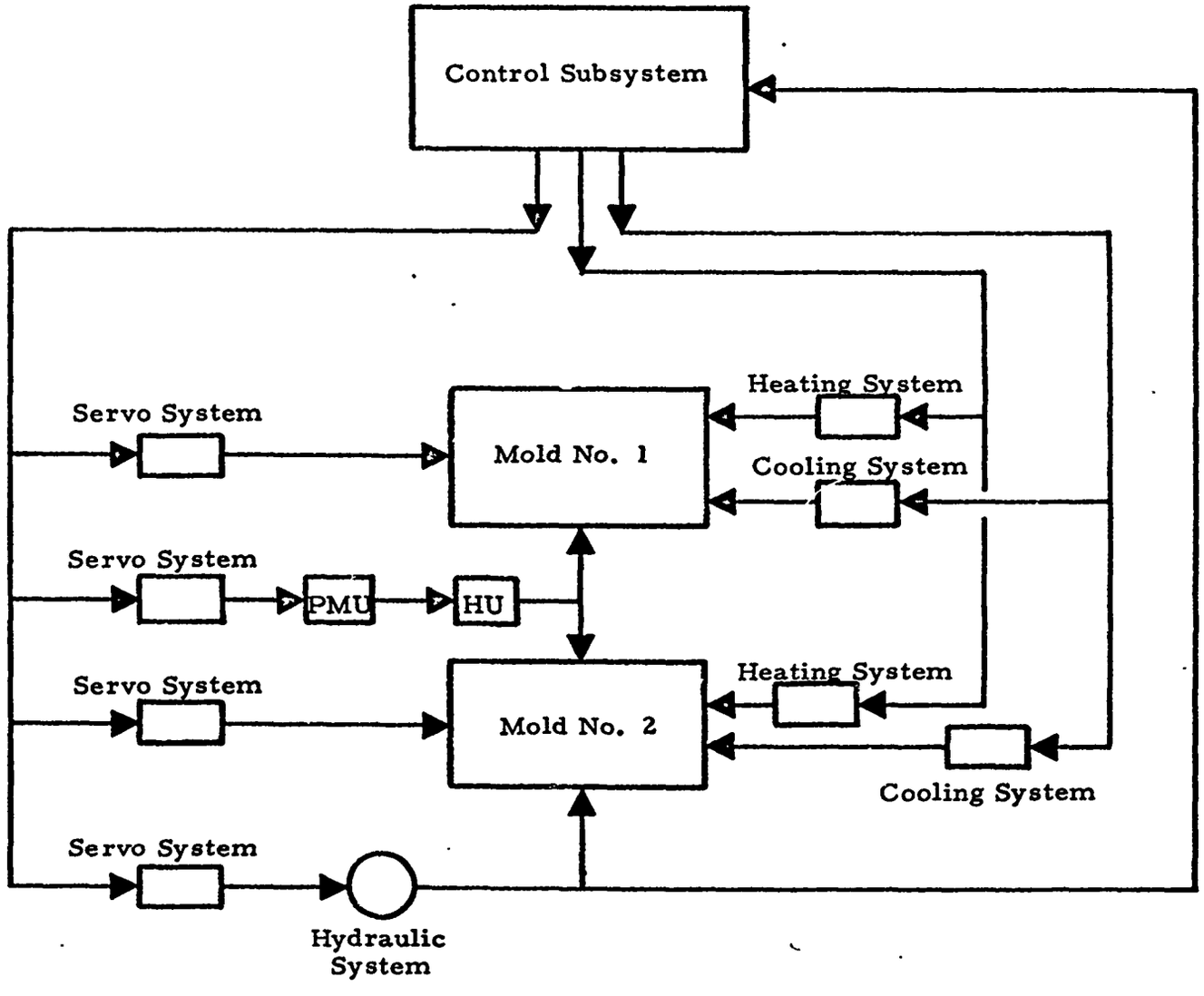

Figure 6. Electromechanical Subsystem Schematic of Pre-Prototype Model

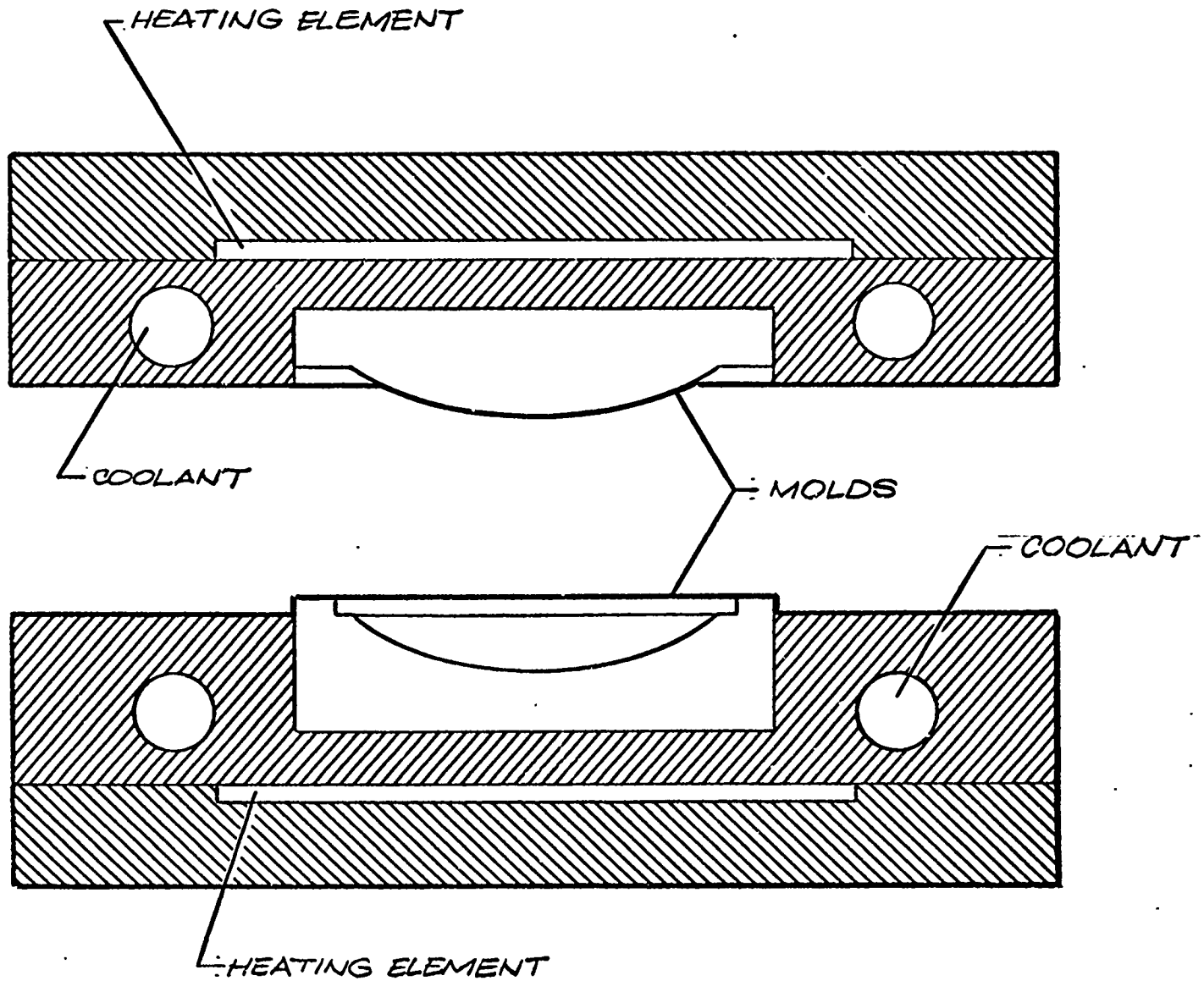

FIGURE 7. BASIC MOLD ASSEMBLY

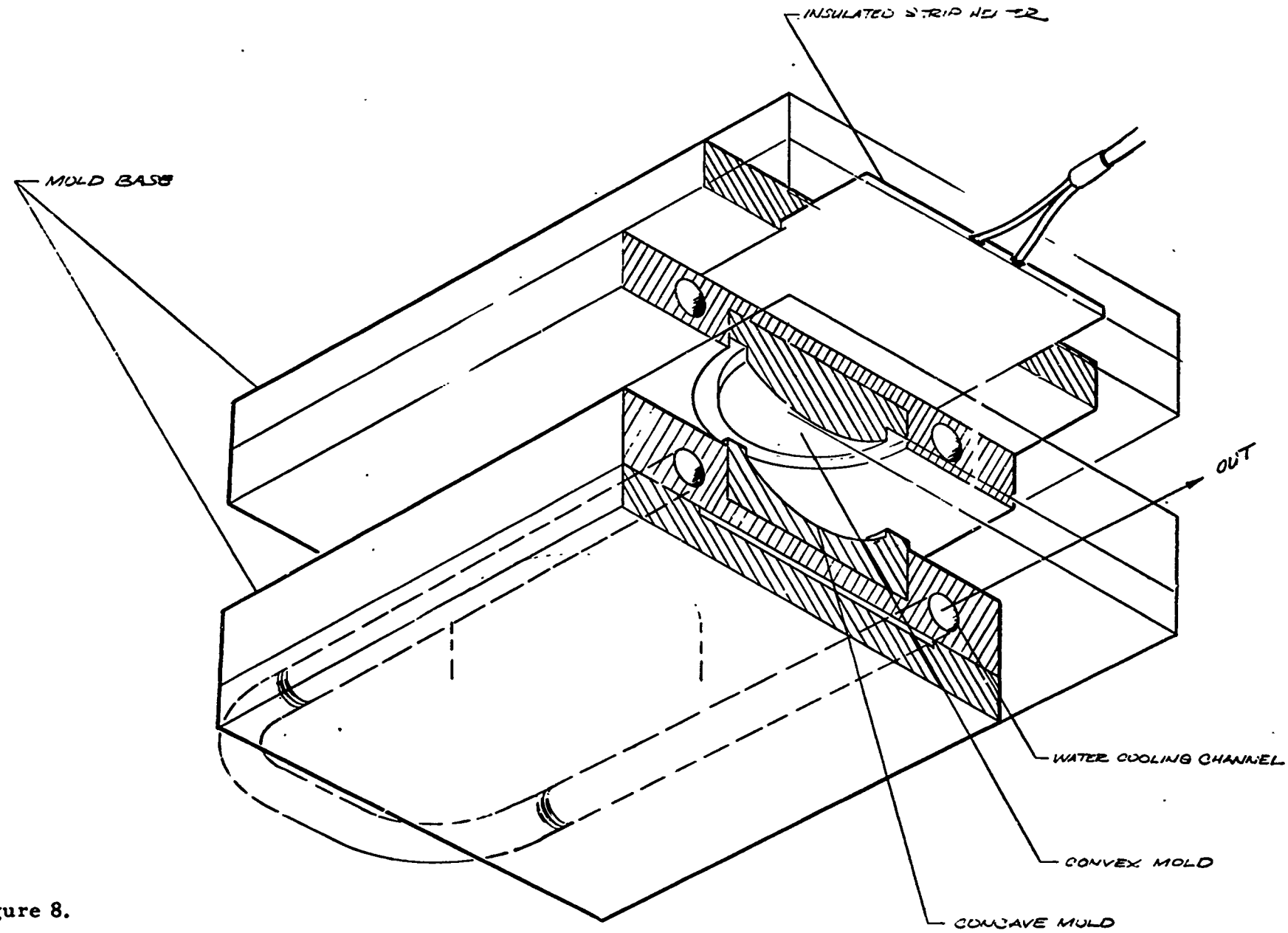

Figure 8.

BASIC COMPRESSION MOLD SYSTEM
LIFE SYSTEMS RESEARCH INST

through the keyboard. The operator will enter here the prescription for the right and left lenses. Other information entry and information display will be accomplished at the keyboard console also. The entered information will be stored in the input register of the buffer and held until the next prescription is entered. The buffer will also physically contain the output terminal to the electromechanical subsystem. The computer section of the control subsystem is the data processing function. It will be programmed to take the prescription information and cause the sequencing of operations within the electromechanical subsystem. It will have a memory unit as well as the logic and processing unit. In addition, overall control of system operation will occur here. There will be a self check program as well as feedback control.

The electromechanical subsystem is illustrated in Figure 6 schematic. A plastic material unit provides for material storage and replenishment. The unit charge of material is dehumidified prior to release for molding to assure accurate size and best result. All moving operations will be driven by servomechanisms as shown. The proper molds will be selected by the control subsystem and indexing will occur. The molds will be compressed hydraulically or mechanically. Only the molds fabricating the lens will be heated and cooled. Heating may be electrical, although other processes are being evaluated. Refrigeration cooling will be traded off against water cooling.

A cross-section of a functioning mold assembly is illustrated in Figure 7. This depicts the relative positions of the heating elements, coolant, and molds. When compressed the mold assembly provides a mechanical stop preventing mold faces from meeting. Pressure in the mold cavity is determined by the weight/density of the charge of plastic. The molds provide for a flange that will permit ease of further handling. A perspective cut-away of the mold assembly is depicted in Figure 8.

The power subsystem will be chosen that will most effectively provide the power to operate the system. Requirements for gasoline consumption and storage will enter into the trade-off. While a motor generator set would be the simplest off-the-shelf answer, a combination in which heating is supplied directly from a combustion chamber could be more efficient. If a motor-generator set is decided upon, then the make-or-buy decision will be governed by the uniqueness of the system requirements.

MOLD REQUIREMENTS

Mold Assemblies for Troops Supported

The following analysis is based upon service to a force of 10,000 men and assumes a high loss/damage rate of spectacles at one pair per two months per man wearing spectacles. On this basis three compression cycles are required simultaneously in an 8-hour day.

Obviously, lower loss rate or longer work day will change cycle needs. The analysis further is based upon 0.5D increments over the entire range of $\pm$ 8D sphere and +5 cylinder.

Input Source (Troop Population) = 10,000

Rate of Demand 35% x 10,000/60 days = 58.5/day

Rate of Demand/Hour 7.3 pair/hour (8-hour day) $\approx$ 15 lenses/hour (8-hr day)

Number of Units Required = 3 (Separate compression mold cycles)

Rate of Production of entire mold system 6 x 3 = 18 lenses/hour

$$\text{Average Utilization Ratio} = \frac{\text{Demand Rate}}{\text{Production Rate}} = \frac{15}{18} = \frac{5}{6}$$

Assume a "Poisson" arrival rate:

$$P(t) = e^{-\lambda t} = e^{-15t}$$

i.e., Probability of number Rx's required in a time of t hours = e^{-15t}

where 15 is the average demand/hour. Thus, the probability of the facility being idle because of random demand is nil.

Now assume a fairly constant press time of 1/6 hour per lens and also assume that each press can handle any Rx that comes in, then:

A. 90% of the lenses can be expected to be completed within one hour of receipt of order, i.e., 10% will take over one hour.

B. Divide the capability between all 3 presses in order to provide .25 diopter intervals, then the percent of Rx's that will take longer than time, t, is as follows:

%	t
36%	longer than 1 hour
13%	longer than 2 hours
5%	longer than 3 hours
2%	longer than 4 hours

Another possibility is to provide 1/4 Diopter steps in sphere and cylinder in areas of maximum demand and 1/2 Diopter elsewhere. Ninety-five percent of requirements would have 1/4 Diopter coverage

without increasing the total number of molds. The variety would be greater. The service time probability distribution would then correspond to B. above rather than A., i.e., instead of 10% of orders taking over 1 hour, 13% would take over 2 hours. However, while it might be thought that the versatility or margin of safety is reduced by having one press per Rx rather than 3 (so that if one mold is damaged there is another to replace it), actually the same safety factor does exist since a second Rx 1/4 Diopter different from the first is available on one of the other presses.

In any case, the choice is always available to make the system in either form: 3 identical units or 3 different ones covering the same range in finer subdivisions.

Molds To Meet Refraction Demands

This analysis is based upon covering ± 8 sphere and +5 cylinder in 0.5D increments. It is provided to indicate the requirements for numbers of molds and also the powers of the mold surfaces to approximate the best ocular curves. Table 7 shows a matrix of + spheres on the front surface vs. + cylinders on a -6D base on the ocular surface. Table 8 shows a matrix of - spheres on the ocular surface with + cylinders on a +6 and +3 base on the front surface.

A recap of these tables is provided in Table 9. For the best fit, three bases and a total of 59 different molds is required. This series provides good marginal astigmatic correction with a best fit curve for the ocular surface over the entire range.

If the +3 base is eliminated over the entire set, then five additional ocular molds are required while eliminating eleven front molds. This requires a total of 54 molds. A good ocular curve is lost; however, in these high - spheres and marginal correction is disturbed. This may be the best compromise, however.

If only a +6 base is used, then the minimum number of 44 molds is required. Here, however, poor marginal correction is in the higher powers and both + and - is the result. In addition, the series goes plano on the ocular side at + 6D sphere.

The 59 mold system is recommended if the trade-off of the increased number proves satisfactory.

If the extreme powers are reduced, then 0.25D increments could reasonably be provided without increasing the number of molds. This approach is not recommended at this time as the need for 0.25D increments has not been shown to be necessary.

Table 7. Mold Combinations for Prescribed Refractions

+ Sphere (Front Surface)		+ Cylinder (Back Surface With -6D Base Curve)												
		D	0	0.5	1.0	1.5	2.0	2.5	3.0	3.5	4.0	4.5	5.0	Total 11 Back Molds
D	Front Mold (D)	Back Mold (D)	-6	5.5/-6	5/-6	4.5/-6	4/-6	3.5/-6	3/-6	2.5/-6	2/-6	1.5/-6	1/-6	
0	+6.0	x	x	x	x	x	x	x	x	x	x	x	x	
+0.5	+6.5	x	x	x	x	x	x	x	x	x	x	x	x	
+1.0	+7.0	x	x	x	x	x	x	x	x	x	x	x	x	
+1.5	+7.5	x	x	x	x	x	x	x	x	x	x	x	x	
+2.0	+8.0	x	x	x	x	x	x	x	x	x	x	x	x	
+2.5	+8.5	x	x	x	x	x	x	x	x	x	x	x	x	
+3.0	+9.0	x	x	x	x	x	x	x	x	x	x	x	x	
+3.5	+9.5	x	x	x	x	x	x	x	x	x	x	x	x	
+4.0	+10.0	x	x	x	x	x	x	x	x	x	x	x	x	
+4.5	+10.5	x	x	x	x	x	x	x	x	x	x	x	x	
+5.0	+11.0	x	x	x	x	x	x	x	x	x	x	x	x	
+5.5	+11.5	x	x	x	x	x	x	x	x	x	x	x	x	
+6.0	+12.0	x	x	x	x	x	x	x	x	x	x	x	x	
+6.5	+12.5	x	x	x	x	x	x	x	x	x	x	x	x	
+7.0	+13.0	x	x	x	x	x	x	x	x	x	x	x	x	
+7.5	+13.0	x	x	x	x	x	x	x	x	x	x	x	x	
+8.0	+13.5	x	x	x	x	x	x	x	x	x	x	x	x	
Total 17 Front Molds														

Table 8. Mold Combinations for Prescribed Refractions (Cont.)

- Spheres (Back Surface)		+ Cylinder (Front Surface With +6 and +3 Base Curve)												
		D	0	0.5	1.0	1.5	2.0	2.5	3.0	3.5	4.0	4.5	5.0	
D	Back Mold (D)	Front Mold (D)	+6	$+\frac{6.5}{6}$	$+\frac{7}{6}$	$+\frac{7.5}{6}$	$+\frac{8}{6}$	$+\frac{8.5}{6}$	$+\frac{9}{6}$	$+\frac{9.5}{6}$	$+\frac{10}{6}$	$+\frac{10.5}{6}$	$+\frac{11}{6}$	10 Front Molds (+6 with + spheres)
0	-6.0	x	x	x	x	x	x	x	x	x	x	x	x	
-0.5	-6.5	x	x	x	x	x	x	x	x	x	x	x	x	
-1.0	-7.0	x	x	x	x	x	x	x	x	x	x	x	x	
-1.5	-7.5	x	x	x	x	x	x	x	x	x	x	x	x	
-2.0	-8.0	x	x	x	x	x	x	x	x	x	x	x	x	
-2.5	-8.5	x	x	x	x	x	x	x	x	x	x	x	x	
-3.0	-9.0	x	x	x	x	x	x	x	x	x	x	x	x	
-3.5	-9.5	x	x	x	x	x	x	x	x	x	x	x	x	
-4.0	-10.0	x	x	x	x	x	x	x	x	x	x	x	x	
-4.5	-10.5	x	x	x	x	x	x	x	x	x	x	x	x	
-5.0	-11.0	x	x	x	x	x	x	x	x	x	x	x	x	
			+3	$+\frac{3.5}{3}$	$+\frac{4}{3}$	$+\frac{4.5}{3}$	$+\frac{5}{3}$	$+\frac{5.5}{3}$	$+\frac{6}{3}$	$+\frac{6.5}{3}$	$+\frac{7}{3}$	$+\frac{7.5}{3}$	$+\frac{8}{3}$	11 Front Molds
-5.5	-8.5	x	x	x	x	x	x	x	x	x	x	x	x	Total 21 Front Molds
-6.0	-9.0	x	x	x	x	x	x	x	x	x	x	x	x	
-6.5	-9.5	x	x	x	x	x	x	x	x	x	x	x	x	
-7.0	-10.0	x	x	x	x	x	x	x	x	x	x	x	x	
-7.5	-10.5	x	x	x	x	x	x	x	x	x	x	x	x	
-8.0	-11.0	x	x	x	x	x	x	x	x	x	x	x	x	
10 Back Molds (-6 on + Sphere)														

Table 9

Recap of Mold Combinations
(374 Prescriptions in 0.5D Steps)

Recap for Good Fit (3 Bases: -6, +6, +3)

21 Back Molds
38 Front Molds
59 Total Molds

Recap for Fair Fit (2 Bases: -6, +6)

27 Back Molds
27 Front Molds
54 Total Molds

Recap for Minimum Fit (1 Base: +6)

33 Back Molds
11 Front Molds
44 Total Molds

Mold Materials

The material of the mold face must be capable of taking a high polish if an optical finish is to be obtained on the lens surface. Four categories of materials are being evaluated: stainless steel (e.g., 240T), aluminum (e.g., 7079), tool steel, and glass ceramic.

Stainless steel can be polished to a high degree, and it is hard, tending to retain its surface through long use. Tool steel is harder and obtains as good a finish. Both, however, have poor thermal conductivity, and as such are slower to heat and cool.

Glass ceramic, Cer-Vit of Owens-Illinois, Inc., can be polished to a degree consistent with telescope mirrors. It also has almost no expansion with heating. On the other hand, it does chip, especially around the edges, and conducts heat poorly.

Aluminum, although relatively soft, can be polished to a surface equal at least to stainless steel. It conducts heat well, the thermal conductivity being four times greater than stainless and tool steels and ten times greater than Cer-Vit.

Molds of all types are being evaluated in terms of the quality of lenses produced, cycle time, and durability. One other approach being evaluated is to provide a core of aluminum for a steel or glass ceramic mold.

Mold and Lens Configurations

The mold face must be shaped to the reverse of the lens surface. The front surface of the lens being convex, the mold face will be concave and the mirror image of the lens in power. The rear surface being concave, the mold face will be convex and the mirror image of the lens power. Since the lens surface is a segment of a sphere or cylinder or both the radii must be determined for mold manufacture. As the lens is made of polycarbonate, the index of refraction of polycarbonate must be used. The radii of Dioptric curves up to 8D for polycarbonate, "Lexan" of General Electric, is provided in Table 10.

Various lens configurations and shapes are schematically displayed in Figure 9. In this figure "S" is the depth of the lens from its center to the center of the plane forming its edge, that is the "Sagitta." One-half the length of this plane "A" is actually one-half the diameter of the lens shape.

In Figure 9A a convex lens shape with a plano back is shown. The formation of a bent convex lens by two intersecting spheres is shown in Figure 9B.

Cross-sections of bent convex and bent concave lenses are shown in Figure 9C and D. Here: "CT" is the center thickness of the lens,

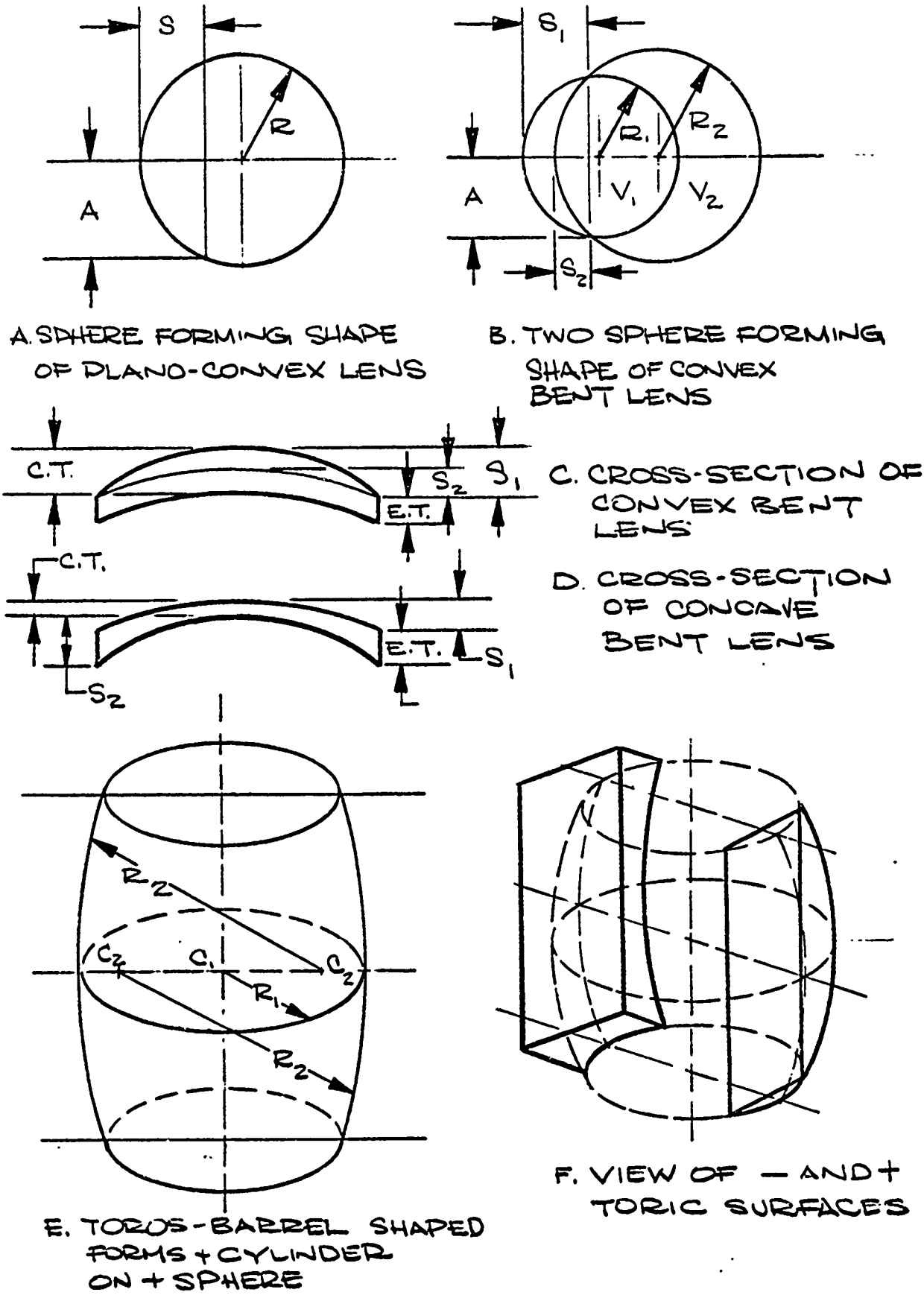

Figure 9. Lens Configurations and Shapes.

Table 10

Radii of Dioptric Curves
(1.586 Index of Refraction)

Diopters	Radius in MM	Radius in In.	Diopters	Radius in MM	Radius in In.
0.25	2344.000	92.2835	4.50	130.222	5.1269
0.50	1172.000	46.1417	4.75	123.368	4.8570
1.00	586.000	23.0709	5.00	117.200	4.6142
1.25	468.800	18.4567	5.25	111.619	4.3944
1.50	390.667	15.3806	5.50	106.545	4.1947
1.75	334.857	13.1833	5.75	101.913	4.0123
2.00	293.000	11.5354	6.00	97.667	3.8452
2.25	260.444	10.2537	6.25	93.760	3.6913
2.50	234.400	9.2283	6.50	90.154	3.5494
2.75	213.091	8.3894	6.75	86.815	3.4179
3.00	195.333	7.6903	7.00	83.714	3.2958
3.25	180.308	7.0987	7.25	80.828	3.1822
3.50	167.429	6.5917	7.50	78.133	3.0761
3.75	156.267	6.1522	7.75	75.613	2.9769
4.00	146.500	5.7677	8.00	73.250	2.8839
4.25	137.882	5.4284			

Based on the formula $r = \frac{n - 1}{D}$

where D = surface power in Diopters

n = index of refraction

r = radius of curvature in meters

Index of refraction is based on product data supplied by GE for LEXAN (Polycarbonate Resins) series 100 and series 140.

"E. T." is the edge thickness, "S_1" is the Sagitta of the front curve, and "S_2" is the Sagitta of the back curve.

The elements of the formation of a "toric" lens, that is, a cylinder on a sphere, is shown in Figure 9E. A perspective view of + and - toric surfaces formed from the "toric barrel" is shown in Figure 9F.

As a 60 mm round lens has been suggested for the basic configuration the thickness of the lens must be determined next. A minimum center thickness of 2 mm for the concave lens will provide excellent strength with light weight, and a minimum edge thickness of 0.5 mm will be necessary in the convex lens to provide a handling edge. The results of those calculations are listed in Table I.

Lens Volume/Weight Determinations

Since the mold faces do not meet in the molding process the weight/density of the charge of polycarbonate determines the pressure on the polycarbonate exerted by the mold faces. It is imperative, then, to know the weight of the charge required for each lens refraction. This is accomplished by computing the volume the finished lens should be.

Spherical lens charges are computed using the diagrams of Figure 9. Cylindrical lens charges and sphero-cylindrical lens charges are computed using the toric shapes in Figure 9. To exemplify this, the charge of a spherical lens will be computed. The symbols are consistent with Figure 9.

(1) Volume of a lens having sagitta "S" and diameter "2A" :

$V = 1/6\,\pi\, S(3A^2 + S^2)$, where V_F = volume of front surface, and V_B is volume of back surface.

(2) Volume of edge thickness of lens:

for convex lens, $V_{E.T.CV} = 2\pi\, R_2 S_2 (E.T.)$

for concave lens, $V_{E.T.CV} = 2\pi\, A^2 (E.T.)$

(3) Volume of convex bent lens:

$$V_{CVBL} = V_F - V_B + V_{E.T.CV}$$

Table 11

Various Lens Thicknesses for 60 mm
Round Polycarbonate Lenses

Sphere (D)	Front Surface (D)	Back Surface (D)	Edge Thickness (mm)	Center Thickness (mm)
+8	+14	-6	0.5	6.6
+7	+13	-6	0.5	5.9
+6	+12	-6	0.5	5.1
+5	+11	-6	1.0	4.8
+4	+10	-6	1.0	4.1
+3	+ 9	-6	1.0	3.3
+2	+ 8	-6	1.0	2.5
+1	+ 7	-6	2.2	2.0
+0	+ 6	-6	2.0	2.0
-1	+ 6	-7	2.8	2.0
-2	+ 6	-8	3.5	2.0
-3	+ 6	-9	4.3	2.0
-4	+ 6	-10	5.1	2.0
-5	+ 6	-11	5.8	2.0
-6	+ 3	-8	5.8	2.0
-7	+ 3	-9	6.6	2.0
-8	+ 3	-10	7.4	2.0

(4) Volume of a concave bent lens:

$$V_{CCBL} = V_F + V_{E.T.CC} - V_B$$

(5) Weight = V x S. G., where S. G. Lexan is 1.20.

(6) For example, a +2D sphere, convex,

60 mm round lens having a front surface of +8D,

rear surface of -6D, and edge thickness of 1 mm:

(a) $A = 30$ mm, $R_1 = 73.3$ mm, $R_2 = 97.7$ mm

(b) $S_1 = \frac{A^2}{2R_1} = 6.1$ mm, $S_2 = \frac{A^2}{2R_2} = 4.6$ mm

(c) $V_F = 1/6\,\pi\, S_1(3A^2 + S_1^2) = 8807.3$ cu mm

$V_B = 1/6\, S_2(3A^2 + S_2^2) = 6566.4$ cu mm

$V_{E.T.CV} = 2\pi\, R_2 S_2(E.T.) = 2827.8$ cu mm

(d) $V_{CVBL} = V_F - V_B + V_{E.T.CV} = 5068.7$ cu mm

(e) $W = V_{CVBL} = 5.6 = 6082.4$ gm

MATERIALS AND BREADBOARD STUDIES

MATERIALS DEVELOPMENT

The materials development effort has been primarily devoted to the further evaluation of coatings and the development of new formulations.

Summary of Results

Using CR-39 as a gauge there are only a few coatings that can impart that degree of abrasion resistance. Many epoxy-melamine formulations have been devised and at least one approaches CR-39.

"Abcite," DuPont, imparts abrasion resistance equal to CR-39 but the licensing agreement is prohibitive for an exploratory development: approximately $225,000 plus an indefinite royalty fee.

Owens-Illinois' glass resin polymer provides abrasion resistance equal to CR-39 also and requires a reasonable license agreement: $250 per year for exploratory work. Life Systems Research Institute has executed this agreement to be sure of this source.

Other coating methods have been evaluated such as: vacuum deposition and sputtering. None of these are practical for the ASLFS and also do not impart a surface as good as the other identified above.

Epoxy-Melamine Evaluation

Well over 50 epoxies, melamines and/or epoxy-melamine combinations have been tested and evaluated. The evaluation consisted of formulating the material into a coating, curing the coating on a strip of methyl methacrylate and evaluating the abrasion resistance of the coating as compared to the methyl methacrylate substrata. Tables 12 and 13 list many of the various materials evaluated and identifies those which showed the most promise and can expectedly be formulated into coatings of improved abrasion resistance. Table 12 lists epoxy coatings and Table 13 epoxy-melamines. A typical evaluation work sheet is defined in Table 14.

It was found that Marblette's epoxy #655 with melamine added, Marblette's epoxy #659 without melamine added, and Ciba's epoxy #6010 with and without melamine, had better abrasion resistance than methyl methacrylate. However, in further study, using an eraser scratch test, only Ciba's #6010 approached CR-39. This would seem to be the coating to pursue.

It should be noted that while formulating the coatings, there often resulted incompatabilities between the various materials and the solvents. This necessitated formulating some materials several times between a homogeneous coating could be achieved. The final epoxy-melamine coating formulation will be made during the current effort.

The effect of silicone leveling agents has been investigated. However, a complete evaluation can be made only when the final coating is evolved. The results to date indicate that they improve the surface properties of the coating; however, excess results in poor adhesion and pitting.

Glass Resin Polymer Coating

Owens-Illinois Glass Resin polymer, so named because of their glass-like appearance, is a new family of materials. When cured, they are thermoset silicones which will not soften when heated and are insoluble in all common organic solvents. Unlike most thermosets, Glass Resins have no exotherm and heat must be applied to cure the coating resins. Early developments of Glass Resin polymers were applied as thin films (less than 1 mil) for metal surfaces such as copper, aluminum, and stainless steel.

To date, two members of the Glass Resin polymer family have been released for evaluation as coating materials. For most applications Glass Resin Type 100 is recommended. Glass Resin Type 650, somewhat more reactive, has exceptional light transparency with an ultraviolet cutoff below 1900A. Coatings thicker than 1 mil are somewhat brittle and have limited flexibility; consequently, a coating thickness of 0.5 mil or less is recommended.

Glass Resin 100 coatings (.25 mil) over aluminum substrates were exposed for 1500 hours in salt spray chambers and for 500 hours in a 100 percent RH with little or no change in the coating or metal substrate. Glass Resin coatings are chemically resistant to concentrated and dilute acids and bases such as: hydrochloric acid, sulfuric acid and sodium hydroxide for 24 hours at room temperature. Solvents such as acetone or other ketones will soften or permeate the coating but when removed from the solvent, the coating becomes hard once again.

Zinc oxide pigmented Glass Resin Type 650 coatings on aluminum substrate have been found exceptionally stable in vacuo, after 2000 equivalent solar hours of radiation. Both types of Glass Resin have excellent stability to ultraviolet light from 3000A and through the visible spectrum. Samples of Glass Resin have been exposed to a 400 watt mercury arc ultraviolet source (3000-4000A) in air, eight inches from the ultraviolet source for 1000 hours without any changes in the transmission values. Copper and aluminum panels coated with Type 100 Resin have been exposed for 3700 hours in the Atlas Twin Arc 655 Weatherometer with little change in the metal and film appearance.

Table 12

Summary of Epoxies Tested

(Results are based on comparisons to methyl methacrylates)

Type	Better	Equal Results	Poor
Marblette #655			x
Stycast #1269		x	
Stycast #1266 (Test #1)		x	
Marblette #659 (Test #1)	x		
Ball Chem. Lexcote G3327		x	
Ciba #502 (Test #1)		x	
Ciba CY183 (Test #1)		x	
Ciba ECN1273			x
Ciba CY178		x*	
Ciba 6010	x		
Stycast 40A (Test #1)		x	
Stycast 40A (Test #2)			x
Ciba EPN1139		x*	
Eccogel 1265			x
Eccosil 2CN (no evaluation possible)			
Emerson & Cuming CPC16			x
Ciba CY183 (Test #2)			x
Stycast 1266 (Test #2)		x*	
Ciba 502 (Test #2)		x*	
Marblette #658			x
Marblette #659 (Test #2)	x*		
Marblette #658 & 659 combined		x	

*Indicates cloudiness and/or yellowing.

Table 13

Summary of Epoxy-Melamines Tested

(Results are based on comparisons to methyl methacrylate)

Type	Better	Equal Results	Poor
Marblette #655	x		
Marblette #6164		x*	
Marblette #602		x*	
Stycast #1269		x*	
Marblette #659 (Test #1)	x		
Stycast #1266 (Test #1)			x
Ball Chem. Lexcote G3327		x	
Ciba #502		x*	
Ciba CY183 (Test #1)		x*	
Ciba ECN1273		x*	
Ciba CY178			x
Ciba 6010	x		
Stycast 40A (Test #1)			x
Stycast 40A (Test #2)			x
Ciba EPN1139		x*	
Eccogel 1265			x
Eccosil 2CN (no evaluation possible)			
Emerson & Cuming CPC16			x
Ciba CY183 (Test #2)			x
Stycast 1266 (Test #2)		x*	
Marblette #658		x*	
Marblette #659 (Test #2)		x*	
Marblette #658 & 659 combined		x*	

*Indicates cloudiness and/or yellowing.

Table 14

Coating Tested

Epoxy-Melamine

5.3 grams #655 epoxy

10.0 grams Cymel 300

40.0 cc solvent

1.6 grams catalyst

20.0 drops Phosphoric Acid

Dip coated plastic lenses in coating and cured at 280°F for 55 minutes.

Remarks:

1. L-522 was omitted from formula.
2. In the absence of white room conditions, the coating showed dirt contamination.
3. Coating material was thin in consistency causing waves and bubbles.
4. Lenses were allowed to cool at room temperature before evaluation of abrasion resistance.
5. Abrasion resistance - better than methyl methacrylate.

Properly cured coatings are quite transparent or glass-like in appearance and are easily cleaned. Coatings 0.5 mil thick will have a sward hardness of 35-50 or a pencil hardness of the H scale of 7H and above. Both types of Glass Resins are rapidly cured in a short period of time.

Glass Resin Type 100 coatings 0.5 mil or less will withstand 180°C flexibility over a 1/8" mandrel and remains intact on metal elongations of 10 percent based on the General Electric drop test. Glass Resin 650 coatings will have similar flexibility if applied at a thickness of 0.2-0.3 mil.

The curing of the Glass Resin coating will be determined by the thickness of the coating and the nature of the substrate. The cure is a time, temperature relationship. The criteria for cure is insolubility as determined by wiping the coating with an acetone saturated cloth. The cure for metals and glass shows a sharp break at about 10 minutes and 200°C with prolonged cure time below that temperature. The cure cycle for plastic substrates is not given by the manufacturer. However, they indicate that most coatings on these substrates have been adequately cured at a temperature of 275°F for 16-24 hours. The experience of this project indicates a reasonably good cure can be achieved in 10-15 minutes at 250°F.

Literature Survey

The comprehensive literature search has been updated for the years 1969 and 1970, especially reviewing advertisements for new equipment, new materials and new products sections to learn of recent developments in which might be applicable to the current program. These periodicals were: Plastics Technology, Plastics World, Modern Plastics, Chemical and Engineering News, Chemical Engineering, Chemical Engineering Progress, and assorted electrical and electronic periodicals.

A few items of interest which resulted:

Source of water white epoxy-Epoxy Technology Corp., EpoTek 301.

Possible source of metal molds-Newark Die Hobbing & Casting Co., 20 Scott Street, Newark, N.J.

Source of water white epoxy-Emerson & Cuming, Inc., Canton, Mass.

Glass microballoons-Emerson & Cuming, Inc., Canton, Mass.

Source of water-based epoxy-General Mills Chemical Division, Minneapolis, Minn.

The patent search was updated through the review of over 700 patents in Classifications 260-29.1, 260-37, and 117-116. A number of interesting references were identified and copies requested. DuPont patents for 1968, 1969, and 1970 were also reviewed to obtain the latest information on "Abcite." Copies of these are also requested. Patents obtained:

Patent Number	Subject
U.S. 3525689	Thickening agent
3527655	Adhering silicone
3527929	Abrasive resist. coat
3446762	Abrasive resist. paint
3454513	Silicone coating of metal
3427270	Primers
3442824	Silica coating of metal
3421907	Stabilized silica compounds
3421908	"
3421909	"
3484157	Abrasion resist. coat
2921870	"
3160551	Protective coating
3451838	Owens-Illinois Glass Resin coating
3460980	"
3427187	Silicic hydrocarbon compounds
3492137	Silicious composition
3421928	Mar resist. plastic
3429846	DuPont "Abcite"
3429845	"
3476827	"
3514425	"
2404351	Abrasion resist. coating-early DuPont
2404426	"
2440711	"

BREADBOARD STUDIES

The breadboard studies during the first six-month period were devoted to three major areas of evaluation: mold design and manufacture; evaluation of polycarbonate grades; and molding cycles and characteristics.

Summary of Results

Mold materials have been intensely studied during this report period. Three have been specially evaluated: stainless steel (240T), aluminum (7079), and glass-ceramic (Cer-Vit). For ease of use and cycle speed aluminum is most attractive, but for quality of finish and resistance to scratching glass-ceramic appears to be far superior in most trials. This work is continuing.

Four grades of polycarbonate were evaluated: Lexan, General Electric, grades 101, 121, 141, and 145. Of these grades, 141 has performed best in all trials and will be used for the continuing effort.

The molding process represents the most critical aspect of the production of plastic lenses, at this time. Much of the effort has been concerned with cycle characteristics: time, temperature, and pressure relationships. In addition, such factors as pressure release or gassing, preheating, and weighing need to be specifically defined. Since the use of polycarbonate is primarily in injection molded products, compression molding characteristics are not well identified. In addition, the use of polycarbonate for lenses is an entirely new application. While the literature recommends temperatures to 500°F for the molding stage, it has been found that the optimal temperature for this application is 350°F. It has also been found that a preheating/drying cycle is necessary to produce bubble-free lenses.

As to the production of lenses, much of the reported results concern the production of unacceptable lenses and the reasons for this. However, at this time, lenses of both 56 and 68 mm diameter are being produced in a variety of spheres with good ophthalmic quality.

Mold Design and Manufacture

During this report period much effort has been spent investigating mold materials and working with various mold makers. Concerns contacted have included: Omnitech, Inc., Dudley, Mass.; Newark Die Hobbing and Casting Co., Newark, N. J.; University Ophthalmic Products, Houston, Tex.; Tinsley Laboratory, Oakland, Calif.; MacDonald Enterprises, Inc., Los Angeles, Calif.; and Lunarlite Optical Co., Glendale, Calif. Some of the effort has been done jointly with several precision tool and die companies in the fabrication of molds for the project.

A variety of materials have been evaluated, including: 7079 aluminum which does not require chromeplating, 240T stainless steel, and glass-ceramic Cer-Vit. Owens-Illinois personnel have been very cooperative with respect to this unique use of their Cer-Vit material. Of the three materials identified Cer-Vit is most attractive because of the finish and hardness that can be achieved and the ease of grinding and polishing. Next in order of preference is 240T stainless steel. This material is more difficult to work with due to its hardness but it is very stable. The 7079 aluminum is one of the hardest of the aluminum materials but grinding and polishing is more difficult and the finished mold scratches more easily.

Owens-Illinois' Cer-Vit material belongs to the family known as "glass-ceramics." Their principal uniqueness is their tailorability to yield specific properties and combinations of properties not previously available for specific end uses. In the process of manufacturing Cer-Vit material products, a special glass is first melted, then formed into

monolithic structures of the desired shape. Finally, a controlled heat treatment converts the glass to a nonporous, polycrystalline material exhibiting a high degree of isotropy in all its properties. Cer-Vit material C-101 was tailored to have near-absolute dimensional stability and resistance to chemical attack over a wide range of temperatures and long periods of time. This material has been available to the optical industry for the past several years as an ultra-stable reflective optics substrate where massive slabs are cast with remarkably homogeneous properties throughout. The coefficient of thermal expansion of Cer-Vit material C-101 is near zero over a wide temperature range. Cer-Vit material will withstand extreme thermal shocks without affecting its integrity, properties or dimensions. The material is resistant to chemical attack by all acids except HF, by solutions containing chlorides, and by alkaline solutions with a pH of less than 13. It is particularly suitable in hot, corrosive, abrasive environments. Visible, near-infrared and microwave radiation is transmitted by Cer-Vit material C-101 with good efficiency. It can be optically finished for reflective optic and window-type applications.

Several techniques are available to manufacture molds that will give optical quality results. Hobbing appeared to be the simplest technique. However, on further investigation, it was felt that the hardening process subsequently applied would cause objectionable distortion, and this approach should not be pursued. Electroforming, whereby metal molds are reproduced from easily obtained glass masters, has much merit and will be pursued. However, its stage of development is still experimental and development molds cannot be made by this technique without delaying the project. Working molds will be made by more conventional processes but at least one experimental electroformed mold will be obtained.

Grinding and polishing is still the old, dependable workhorse method and the one that will be used at this time.

Polycarbonate Evaluation

Four grades of General Electric Lexan polycarbonate were evaluated to arrive at the most desirable material. These included #101, 121, 141, which have varying viscosities, and 145 which is a powder rather than a pellet. All the materials were run on what was the best cycle identified at that time. The lenses produced were evaluated for defects. While hundreds of lenses were produced in this evaluation, Table 15 typifies the results achieved with each material.

Lexan polycarbonate resins are produced in low and medium melt viscosities. The physical properties for each group are identical. The only difference is in the molding characteristics. Lexan 140 resins are low viscosity materials for use in molding intricate hard-to-fill parts; Grade 141R has properties identical to 141 except for its improved mold release characteristics for close tolerance and minimum draft applications. 100- resins are medium viscosity materials most commonly used for injection molding. Lexan 121 resin is a low viscosity material

Table 15

Typical Results of Polycarbonate Evaluation

Cycle: No pressure thru melt
500 lbs pressure in heating at 350°F
1500 lbs pressure in cooling

Power	Charge	Remarks
Lexan 101		
+3	9 gms	Easy open, contaminated, slight bubble, no flash
+3	10 gms	Easy open, contaminated, slight bubbles, minimum flash, scratching
+3	10 gms	Easy open, contaminated, stretching on edges, slight bubbles
-3	9 gms	Easy open, contaminated, minimum flash
-3	10 gms	Easy open, slight scratching, minimum flash
-3	11 gms	Easy open, contaminated, slight bubble
Lexan 121		
+3	11 gms	Easy open, bubbles, stretching, no flash
+3	10 gms	Easy open, bubbles, stretching, minimum flash
+3	9 gms	Easy open, bubbles, no flash
-3	11 gms	Slightly difficult open, good lens, excess flash
-3	10 gms	Slightly difficult open, good lens, excess flash
-3	9 gms	Slightly difficult open, good lens, excess flash
Lexan 141		
+3	9 gms	Easy open, no bubbles, stretching
+3	10 gms	Easy open, slight bubbles, stretching
-3	9 gms	Easy open, good lens
-3	10 gms	Easy open, good lens
Lexan 145		
+3	9 gms	Small amount of unmelted charge, minimum flash
+3	10 gms	Small amount of unmelted charge, minimum flash
+3	11 gms	Small amount of unmelted charge, minimum flash
-3	9 gms	Unmelted charge, minimum flash
-3	10 gms	Unmelted charge, minimum flash
-3	11 gms	Unmelted charge, minimum flash

which provides maximum flow in thin section injection molded parts. Grade 121R has properties identical to 121 except for its improved mold release characteristics for close tolerance and minimum draft applications. These grades are available only in 112 natural tint and transparent custom colors. Lexan Resin 145 is a fine white powder. It will pass an 8 mesh screen and have an average particle size of about 40 mesh. Bulk density is in the 16-18 lbs/cu. ft. range. Lexan 145 is the basic resin on which the Lexan 140-series of molding products is based. White in powder form, Lexan 145 produces sparkling, water-clear transparent films and coatings.

General Compression Molding Technique

A description of the general method of compression molding is provided as a basis from which comments can be made about specific differences or unique techniques applied to the fabrication of lenses. This methodology especially relates to the breadboard studies and in particular to the development of specific processes for the pre-prototype ASLFS.

The first step is preheating the material to removed trapped moisture and allow accurate charge determination. The charge can either be weighed or determined volumetrically. For dry material weighing is far more accurate. Preforms are frequently used in industrial applications. This would be unsuitable for the ASLFS due to the variation in size of each different lens refraction and also because of the additional machine complexity required. Next the mold is loaded and the press is ready to be closed.

There are three distinct operations involved in closing the mold. Low pressure is applied which starts the ram slowly upward until finally it comes in contact with the upper half. Then high pressure is applied (about 1000-3000 psi) and then momentarily released to permit the escape of trapped gases and moisture. This occurs quickly so that the plasticized material does not become chilled. Finally the high pressure is applied for closing and subsequent cure.

This release of pressure after closing is called gassing, but the operation is not necessarily an essential part of the molding cycle. Gassing is resorted to chiefly in the molding of items with thick sections, and the correct moment for release of pressure has to be determined by trial and observation of the finished part. It is often found unnecessary since the items do not require such a release of volatile matter.

The cure time is the number of minutes employed in keeping the trapped material under combined heat and pressure. It varies anywhere from 45 seconds up to as much as 10 minutes. This is further governed by the size of the item being molded. Thick sections require a longer time than thin ones. The time required has to be determined by trial and error.

On a self-contained press the high and low pressure is regulated by the machine itself. In addition to this a cycle controller may be used which is adjustable to required curing conditions. The cycle time can be predetermined and set, and by use of cams the gassing can be made automatically; and the mold will close and reopen in a specific time. Release of the molded items from the cavities is the next consideration. The items will be found clinging to one of the mold faces. There are two methods for getting these parts released, the first and most general being by use of ejector pins, sometimes known as knockout pins. In less frequent instances the design of the item precludes the use of knockouts, and in such cases one has to resort to blowing the molded parts out with cold compressed air. This is normally used to clean the mold after the pieces have been ejected. As temperatures averaging 350°F are utilized during the molding process, when the material is exposed to room temperatures after the mold commences to open the drop in heat causes a shrinkage of about 0.006 in. per linear inch. As a result, the piece will either cling more closely to the top part of the die or tend to release itself from the cavity if it happens to remain there when the mold opens. The application of cold air blown on the item aids this shrinkage, and it is for this reason that parts can be released by such a method. The use of compressed air blowing is a much longer process, however, and is resorted to only when ejector pins are not applicable.

If the presses are rated by ram size, the total pressure available should be calculated, and if the machines have adjustable pressures the total required pressure should be ascertained. To determine these pressures, it is necessary to take the projected area of each cavity, which will give the total number of square inches and permit rapid calculation of the required pressure. For example, if, as in the case of a 60 mm lens, each mold face has an area of approximately 8.5 sq. in., then the total mold cavity would be 17 sq. in. If it is desired to apply 1500 psi, then the die should be placed in a press with a capacity of approximately 25,000 lbs, the equivalent of nearly 1 ton psi.

The heating of the mold is of next importance. Where steam is used, there is very little preliminary work possible, as the mold channels have all been bored and connections can be made only after the die has been mounted in the press. Electric heating, however, requires the use of cylindrical cartridges which must be carefully selected before receipt of the mold. The number of cartridges and the diameter of each must be incorporated in the mold layout and the wattage calculated to give the maximum heat required. The number of watts usually varies in each unit, the greater heat being necessary on the outer sides of the mold. The method employed in determining the total wattage utilizes two factors: the volume of mold and mold assembly to be heated, and the number of degrees by which the temperature of the molds has to be raised.

Regardless of the method utilized in heating the molds, there is great thermal loss through radiation and conduction. The molds are made of a steel or aluminum, the presses are solidly constructed of cast

iron or steel, and unless some provision is made for insulation the loss of heat by conduction will become too great for efficient operation. To partially offset this condition, bolsters and supports are interposed between the press and the molds. Instead of placing the mold assembly in direct contact with the press, these supports are set at intervals and act as a strong support for both the top and bottom of the mold. Thus air is permitted to circulate over and under the die while it is in operation. In spite of this precaution there is still a large heat loss by means of conduction.

The most practical means of preventing thermal loss is by use of insulation boards. These can be placed under the die proper or between the bolsters and the press, and sometime insulation is inserted at both places, for dual protection. The size and thickness of the boards are governed by the dimensions of the mold. Hard asbestos sheets cut to the required size are the most practical for this purpose, and these should be about 1/4 in. thick.

During the studies to develop an effective molding process many problems were encountered which are typical of compression molding. Some problems encountered are particularly unique to the compression molding technique of this project. A summary of these problems, with their causes and remedies, are listed in Table 16.

Molding Cycles and Characteristics

This portion of the studies accomplished concerns the identification of optimal machine processing cycles which will provide good quality ophthalmic lenses and lead to the design of the ASLFS. Two breadboard compression molding systems are in operation for these evaluations. One is a Carver Laboratory Press and is being used to study the actual molding process at the mold/plastic level. The other is an Enerpac, semi-automatic, short-stroke press and is used to study the cycling sequence and the automated electromechanical subsystems. Over six hundred tests have been accomplished.

A summary of the analyses of results is presented in what follows. A typical test run studying one cycle characteristic, pressure, is exemplified by Table 17. While many good lenses have been produced, failures are also important and lead the way to better technique. Failures are recorded and indexed as shown in Table 18. A typical data collection sheet is illustrated in Figure 10.

Temperature--In almost all cases, high temperatures (over 375°F) caused extreme sticking of the mold and excessive flash. Intermediate temperatures (350°F - 375°F) gave the best results, overall, in that there was minimum flash, and easy opening of the molds. Low temperatures (under 350°F) created problems with improper flow of material.

Table 16

Major Problems, Causes, and Remedies in Compression Molding

Condition of Molded Item	Causes	Remedies
Molded item blistered or has bubbles.	Molding cycle too short.	Increase time of cycle.
	Air or gases trapped in mold.	Close mold more slowly. Provide sprue grooves to allow escapement of gas. Preheat material.
	Material has absorbed water by exposure.	Preheat material.
	Mold too hot.	Reduce temperature.
	Insufficient pressure.	Increase pressure.
	Mold too cold.	Increase temperature.
	Mold charge too bulky, contains too much air.	Distribute material in most suitable manner to allow air to escape.
	Nonuniform heating.	Place mold in press in a way to promote uniformity of heating.
Molded item is flexible on discharge.	Piece is insufficiently cured.	Increase curing cycle. If temperature is too low, raise it.
	Material has absorbed water by exposure.	Preheat material.
Molded item sticks or adheres to mold.	Temperature too high and resin fails to come to surface and cover it.	Reduce temperature.
	Mold fouled by previous materials.	Clean surface of mold.
	Mold is undercut by scratches, dents, etc.	Repair mold.
	Mold is poorly polished.	Polish mold.
	Mold is irregularly heated, leaving cold spots.	Heat properly.
	Pieces are undercured: too short a cycle or too low a temperature.	Increase cycle, temperature.
	Charge has trapped gas or air pockets, distorting piece and binding it to mold.	Slower closing of mold. Breathe mold. Preheat. Provide vents.
Surface of item dull.	Mold too hot or too cold.	Correct temperature.
	Mold improperly polished.	Polish mold.
	Poor grade of steel used for mold.	Polish and chromium plate or replace with better mold.

Table 16 (Cont.)

Major Problems, Causes, and Remedies in Compression Molding

Conditions of Molded Item	Causes	Remedies
Surface of item orange-peeled.	Mold closed too fast under too high pressure.	Close mold more slowly.
	Material too coarse.	Preheat material and load hot. Use a finer material, or preheat and load hot.
	Material contains excessive moisture.	Preheat material.
Surface of item pitted or has small fissures.	Material contains foreign matter, particularly oil or grease.	Protect material against contamination.
Surface of item clouded and/or color segregated.	Mold too hot, causing precuring.	Reduce mold temperature.
	Material too hard and/or pressure too low.	Increase pressure and/or use softer material.
Surface of item has inverted blisters similar to dimples.	Mold closed too fast.	Close mold more slowly.
	Too little charge or too much leakage.	Increase charge. Slower closing of mold.
Items warped.	Mold heated nonuniformly.	Correct heating methods.
	Insufficient cure.	Increase cycle.
	Mold too hot, causing case-hardening of piece.	Decrease temperature.
	Charge left too long in mold before closing.	Faster closing. Provide means for uniform cooling.
	Molding placed where it cools very unevenly; e.g., on cold metal plate.	Provide shrink fixtures.
	Material has absorbed moisture due to exposure.	Preheat material and load hot or cold.
	Pieces cooled nonuniformly (one side cooling faster than the other after molding).	Cool uniformly.

Pressure--The optimal pressure is 1500 to 2000 lbs. Over that there is no increase in effectiveness. Cycle speed does not increase and at higher pressures the liquid plastic is forced out around the molds.

Weight of Charge--In a movable mold the weight of the charge determines the thickness of the molded part. With a fixed mold, the charge weight determines the pressure on the plastic.

Mold Sticking--The tests have shown that in almost all cases mold sticking was caused by high temperatures and pressures.

Broken Hose Lines--Broken hoses prevailed when compression molding cycles required high temperatures of 390°F and over. An onrush of cooling water in contact with the rubber hoses caused these hoses to become brittle, rendering them useless after only 4 to 6 runs. Now that lower temperatures have been found to be effective, this problem has been eliminated. Metal piping should be used in the pre-prototype system, however,

Stretching--This was a problem frequently encountered when cooling occurred rapidly. It was alleviated by slowly releasing the cooling water into the platens and again slowly regaining the desired pressure.

Unmelted Charge--This was a major problem with Lexan 145 although temperatures and pressures were altered on countless tests.

Lens Sticking--At one time a major problem and a most critical one; the use of an intermediate temperature has resolved this situation. Although an external mold release agent was tested, these same intermediate temperatures do not warrant the use of such an agent.

Bubbles--Once the biggest problem, this has been resolved by using the current cycle which, in turn, is compatible with the solutions for all previously stated problems.

Dirt and Dust Contamination of the Coated Lens--While considerable work has been done on this phase of the contract, no completely satisfactory solution has been achieved. It has been possible to achieve significant improvement in dirt removal; however, eliminating every last minute trace will require significantly more work. A dust-free chamber will have to be incorporated into the pre-prototype breadboard.

Molding Cycle--The cycle currently used is listed below:

Preheat Lexan 141 for 2 hours at 250°F (drying).

Preheat compression molding machine; bring up to 350°F having both plates together without pressure.

Insert concave mold into sleeve.

Fill mold cavity with preweighed material.

Insert convex mold into sleeve.

Secure mold assembly.

Close ram so that molds nearly compress, about 100 lbs, and heat about 5 minutes, 350°F. Temperature measured on sleeve assembly.

Apply 1500 lbs pressure for 1 minute.

Activate water cooling cycle slowly and stabilize pressure at 1500 lbs. Requires about 3 minute cool down to be able to handle.

Shut off water.

Withdraw ram and open mold assembly.

Remove lens.

Table 17

Typical Test Run of One Cycle Characteristic--Pressure

Mold Combo:	9.12 concave, 6.00 convex	+3D sphere
Heating Time:	1.5 minutes	
Cooling Time:	3 minutes or more	
Pressures:	See individual results	

Results on two lenses run at 2000 lbs pressure throughout cycle showed large amount of flash with difficulty in removal of lens. One lens had usual amount of bubbles for this power lens and the other had only a few bubbles.

Results on two lenses run at 1500 lbs pressure throughout cycle showed large amount of flash and difficulty in removing lens. Bubbles were again present.

Results on two lenses run at 500 lbs pressure until heating cycle almost complete and then raised to 1500 lbs pressure showed much flash requiring cutting away to remove lens. Bubbles again present.

Results on two lenses run at 500 lbs pressure until heating cycle almost complete and then raised to 1000 lbs pressure showed much flash and bubbles. Removal difficult.

Evaluation: Fewer bubbles, otherwise no change. Excessive flash.

Table 18.

Defective Lens or Process

Power	Pcs.	Trouble Encountered	Lab Book Location	
+2	1	Sticking and excessive flash	2.1, 2B,	p. 2
+1	1	"	"	p. 3
-1	6	"	"	p. 5
-2	4	"	"	p. 6
+3	3	Bubbles	"	p. 7
-3	3	Sticking, excessive flash	"	p. 8
+2	1	Sticking, excessive flash	2.1, c1a	p. 3
+1	1	"	"	p. 4
-1	6	"	"	p. 6
-2	4	"	"	p. 7
+3	3	Bubbles	"	p. 8
-3	3	Sticking, excessive flash	"	p. 9
+1	2	"	2.1, c1b	p. 1
-1	2	"	"	p. 2
+3	2	"	"	p. 3
+3	2	Bubbles	"	p. 3
-3	1	Sticking, excessive flash	"	p. 4
-3	1	Bubbles	"	p. 7
+3	2	"	"	p. 8
+3	2	"	"	p. 9
+3	2	Bubbles, sticking, excessive flash	2.1, b2a	p. 3
-3	2	Sticking, excessive flash	"	p. 4
+1	2	Excessive sticking and flash	"	p. 5
-1	2	"	"	p. 6
+1	8	Sticking, excessive flash	2.1, b2a	p. 7
+1	8	Sticking, excessive flash	2.1, c1d	p. 1
+1	8	"	2.1, c1e	p. 1

DATA SHEET

Time	Temp	Pressure	Cooling		
0:0	380°F	Jog ~400			
2:27	370/on				
3:0		2000.			
5:0	380	2000			
5:10	380	2100	ON		
5:32	280	1900	ON	off the step	
6:34	100	1550	ON	release pressure	
:					
:					
:					
:					
:					
:					
:					
:					
:					
:					
:					
:					
:					
:					
:					

Constants & Notes

Run # 20 Matl. Lexan 101 AMT 18.0 gy.
Dried 45 min
Mold SS -3 disp
Notes Same as #19
Set controller @ 380°; Manually keep temp in 370-380 range; Snug up molds @ 380; wait 3 min; Press up to 2000 psi by manually jogging in small increments; switch to automatic pressure after 2 min; switch to manual press; wait 10 sec start cooling; release pressure at 100°F.

RESULTS: Tiny surface ripples; one pin point bubble

page _____

Figure 10. Typical Process Data Sheet.

Reproduced from best available copy.