AD-755 939

DIGITAL MODULATION ENHANCEMENT STUDY

Herbert Gish

Signatron, Incorporated

Prepared for:

Rome Air Development Center

January 1973

DISTRIBUTED BY:

NTIS

National Technical Information Service
U. S. DEPARTMENT OF COMMERCE
5285 Port Royal Road, Springfield Va. 22151

UNCLASSIFIED

Security Classification

DOCUMENT CONTROL DATA - R & D

(Security classification of title, body of abstract and indexing annotation must be entered when the overall report is classified)

1. ORIGINATING ACTIVITY (Corporate author) Signatron, Inc. 27 Hartwell Avenue Lexington MA 02173	2a. REPORT SECURITY CLASSIFICATION UNCLASSIFIED 2b. GROUP N/A

3. REPORT TITLE

DIGITAL MODULATION ENHANCEMENT STUDY

4. DESCRIPTIVE NOTES (Type of report and inclusive dates)

Final report

5. AUTHOR(S) (First name, middle initial, last name)

Dr. Herbert Gish

6. REPORT DATE January 1973	7a. TOTAL NO. OF PAGES ~~90~~ 95	7b. NO. OF REFS 13
8a. CONTRACT OR GRANT NO. F30602-71-C-0178 b. PROJECT NO Job Order No.: 45191709 c. d.	9a. ORIGINATOR'S REPORT NUMBER(S) SIG A-121 9b. OTHER REPORT NO(S) (Any other numbers that may be assigned this report) RADC-TR-72-344	

10. DISTRIBUTION STATEMENT

Distribution unlimited. Approved for public release.

11. SUPPLEMENTARY NOTES Miles H. Bickelhaupt, Jr. (DCRS) RADC Effort Engineer	12. SPONSORING MILITARY ACTIVITY Rome Air Development Center (DCRS) Griffiss AFB, NY 13441

13. ABSTRACT

A new method of nonlinear modulation of analog information is described which gives a substantial improvement in performance over conventional modulation techniques, such as PCM. The modulation technique which we have called Multistream Modulation (MSMO) provides the capability of designing modulation performance characteristics which can be tailored to specific needs.

The theoretical concepts presented were verified by measurements made on a digital transceiver breadboard constructed during this program. The transceiver breadboard included both the MSM and PCM systems. This enabled ~~us to conduct~~ voice experiments with the transceiver which provided instantaneous switching from PCM to MSM. The informal voice tests which were carried out showed that the predicted and measured threshold extension over PCM was also obtained with voice communication.

DD FORM 1 NOV 65 1473

I-a

UNCLASSIFIED

Security Classification

UNCLASSIFIED
Security Classification

14. KEY WORDS	LINK A ROLE	LINK A WT	LINK B ROLE	LINK B WT	LINK C ROLE	LINK C WT
Nonlinear Processing						
Modulation						
Digital Equivalence						
Digital Transceivers						
Pulse Code Modulation						
Analog Modulation						
Threshold Extension						

I-b

UNCLASSIFIED
Security Classification

SAC--Griffiss AFB NY

DIGITAL MODULATION ENHANCEMENT STUDY

Dr. Herbert Gish

Signatron, Inc.

Approved for public release;
distribution unlimited.

D D C
1973
D.

Do not return this copy. Retain or destroy.

I-C

FOREWORD

This final report was prepared by Dr. Herbert Gish of SIGNATRON. The overall supervision of the program was provided by Dr. Julian J. Bussgang who contributed materially to the ideas which are presented in this report. The design of the equipment was carried out by Daniel Wardimon. Mr. Wardimon also helped in the preparation of Section 4.2.

The objective of the research and development program described by this report was the development of a nonlinear digital signal processing capability to increase the flexibility of digital transceivers.

The project monitor at RADC was Mr. Al Kobos whose interest in this work and encouragement are here gratefully acknowledged. His helpful suggestions led to several improvements in the technical approach adopted in this program.

The project was administered by the Signal Processing Section, DCRS, of Rome Air Development Center, under the direction of Mr. Miles Bickelhaupt.

This report, prepared by SIGNATRON, Incorporated, Lexington, Massachusetts, under Contract F30602-71-C-0178, Job Order No. 45191709, was reviewed by the Office of Information, RADC, and approved for release to the National Technical Information Service (NTIS).

This report has been reviewed and is approved.

Approved: Miles H. Bickelhaupt Jr.
MILES H. BICKELHAUPT, JR.
Effort Engineer

Approved: Joseph L. Ryerson
JOSEPH L. RYERSON, Technical Director
Communications and Navigation Division

FOR THE COMMANDER: Fred I. Diamond
FRED I. DIAMOND
Chief, Plans Office

TABLE OF CONTENTS

Section		Page
I	INTRODUCTION	1-1
II	BACKGROUND OF MODULATION THEORY	2-1
	2.1 Rate Distortion Theory	2-1
	2.2 Performance of Modulation Techniques and Comparison with Theoretical Bounds	2-7
	2.2.1 Frequency Modulation	2-8
	2.2.2 Pulse Code Modulation	2-11
	2.2.3 Pulse Amplitude Modulation/PCM	2-14
	2.2.4 Weighted PCM	2-24
III	MULTISTREAM MODULATION	3-1
	3.1 General Description of MSM	3-1
	3.2 MSM with Individual Stream Coding	3-3
	3.3 Design and Performance of MSM	3-7
	3.3.1 Systematization of Design	3-7
	3.3.2 Calculation Details	3-8
	3.4 Specific Designs	3-11
	3.4.1 Design for $\beta = 8$	3-11
	3.4.2 Design for $\beta = 4$	3-27
IV	DESCRIPTION OF BREADBOARD EQUIPMENT	4-1
	4.1 Design of Breadboard Model and Demonstration	4-1
	4.1.1 Format of the Demonstration Experiment	4-1
	4.1.2 Structure of the Demonstration Breadboard	4-4
	4.2 Functional Description of Multistream Modulation Breadboard	4-8
	4.2.1 Transmitter Description	4-8
	4.2.2 Receiver Description	4-12
	4.3 Instructions for Making Signal-to-Noise Measurements	4-16

Preceding page blank

TABLE OF CONTENTS (Continued)

Section		Page
	4.3.1 Introduction	4-16
	4.3.2 Measurement of ρ_i Input Signal-to-Noise Ratio	4-18
	4.3.3 Measuring the Output Signal-to-Noise Ratio ρ_o	4-19
	4.4 Experimental Results	4-20
V	SUMMARY AND CONCLUSIONS	5-1
	REFERENCES	

LIST OF ILLUSTRATIONS

Figure No.		Page
1.1	Model of a Communication System	1-2
2.1	Basic Elements in a Communication Link	2-2
2.2	Typical Rate Distortion Function	2-3
2.3	Block Diagram of the Principal Components of an FM System	2-9
2.4	Comparison of FM and AM with the Bound on Theoretical Performance for Various Expansions	2-10
2.5	Basic Elements of a PCM System	2-12
2.6	Comparison of PCM, FM and Rate Distortion Theory	2-15
2.7	Model of a PCM System for the Transmission of Analog Data	2-16
2.8	Performance of a PAM/PCM System with a Bandwidth Expansion of 2	2-21
2.9	Performance of a PAM/PCM System with a Bandwidth Expansion of 3	2-22
2.10	Performance of a PAM/PCM System with a Bandwidth Expansion of 4	2-23
2.11	Performance of Energy Coded and Uncoded PCM Systems — Six-Bit Quantization	2-25
3.1	Basic Structure of a Multistream Modulator	3-2
3.2	Multistream Modulator with Individual Encoders	3-4
3.3	Representation of Bit Streams from A/D	3-5
3.4	Example of Alternative Modulation Characteristics	3-9
3.5	Specific Design of a Multistream Modulator for Bandwidth Expansion of 8	3-12
3.6	Performance of Weighted Erasure Decoding of the (23,12) Golay Code for Various Degrees of Quantization	3-16
3.7	Comparative Performance of a Specific Design of Multistream Modulation	3-25

LIST OF ILLUSTRATIONS (Continued)

Figure No.		Page
3.8	Effect of Quantization in Decoding on MSM	3-26
3.9	Examples of MSM Designs for $\beta = 4$	3-28
4.1	Structure of the Proposed Experimental Breadboard	4-2
4.2	Functional Block Diagram of Transmitter	4-10
4.3	Functional Block Diagram of Receiver	4-14
4.4	Flow Diagram	4-17
4.5	Breadboard Equipment	4-21
4.6	Theoretical Performance of MSM and Measured Performance	4-22
4.7	Theoretical Performance of PCM and Measured Performance	4-23

LIST OF TABLES

Table No.		Page
1	Elements of a Performance Calculation	3-20
2	Elements of a Performance Calculation	3-21
3	Elements of a Performance Calculation	3-22
4	Elements of a Performance Calculation	3-23

Contract F30602-71-C-0178

EVALUATION

This report covers the study and experimental evaluation of a new method of nonlinear modulation of analog information to provide improvement in performance over conventional modulation techniques such as PCM. The work was done as a part of the Digital Processing portion of TPO Number 11, "Communication Signal Processing". In particular, the requirement is to study techniques complementing or providing cost effective technical improvement to digital equivalent signal processing undertaken within the aims of TPO Number 11. In light of the success of this effort as described in this report, in-house experimentation and possible contractual effort is planned to improve the power of the technique by parameter variation and to seek out appropriate analog signal inputs other than voice for analysis.

Miles H. Bickelhaupt Jr.

MILES H. BICKELHAUPT, JR.
Effort Engineer

SECTION I

INTRODUCTION

In this report we are concerned with modulation techniques for the efficient use of bandwidth in the transmission of analog information.

The use of bandwidth as a means for combating noise in the transmission of information has been known since the invention of FM, the first practical system which made effective use of bandwidth. Since then other modulation techniques, notably, Pulse Code Modulation, have been even more efficient in their bandwidth utilization.

FM and PCM both made good use of the then existing technology and knowledge of modulation theory. In the interim since the invention of these modulations we have had substantial changes in electronic technology and an enormous increase in our knowledge and understanding of modulation with developments in information theory. The question that we have addressed has been how to make use of the advances in digital technology and theoretical knowledge to develop new and more efficient modulation techniques for the transmission of analog data.

The type of system which we postulated has the general structure which is given in Fig. 1.1. The first step in the process is the digitization of the source followed by digital encoding. The encoded information is then used to generate waveforms for the channel. The digital structure permits the use of a highly nonlinear transformation with memory, which are essential elements for efficient use of available bandwidth. Note from the figure that we use the term "modulation" in a rather broad sense.

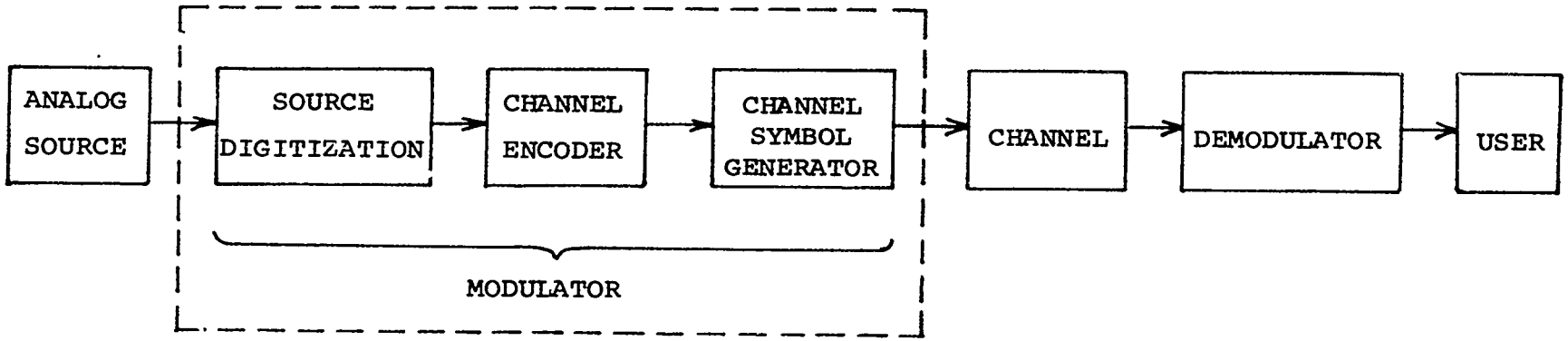

Fig. 1.1 Model of a Communication System

Our research has resulted in the construction of a breadboard of a nonlinear modulation technique which provides substantial improvement over FM and PCM systems. The breadboard represents the realization of a specific design of certain general modulator design principles discussed in this report. The new modulation has been called Multistream Modulation (MSM) for reasons which will become obvious when it is explained below in the text.

The basic notion behind the techniques discussed in this report is that after a signal is digitized, i.e. converted into bits, certain of the bits are more important in the representation of the signal than others. This notion is coupled with the concept of applying redundancy to the digital data in a selective manner. The methods of coding which are considered include error correcting codes, energy coding and the selection of waveforms for transmission over the communication channel. The use of error-correcting codes provides the nonlinear modulation technique with memory which is important for efficient utilization of bandwidth.

SECTION II

BACKGROUND ON MODULATION THEORY

In this section we will discuss the theoretical background which provides some of the basic motivation for undertaking this research program. This background includes the fundamental ideas of rate distortion theory and an explanation of the gap which exists between the performance of existing modulation techniques such as AM, FM, and PCM and what can theoretically be achieved by more advanced techniques.

2.1 Rate Distortion Theory

The elements of rate distortion theory are to be found in Shannon's original work [1] and in more detail in his later work [2]. This theory provides the means for calculating the best obtainable performance for the communication channel which is under consideration. In the following paragraphs we will present the elements of this theory and how it applies to our specific problem.

Consider the diagram of the essentials of a communication system shown in Fig. 2.1. The information process $x(t)$ $(0 \leq t \leq T)$ is encoded, transmitted over the noisy channel and decoded to yield the estimate $\hat{x}(t)$. The distortion measure which is of interest to us is the mean square error and is given by

$$D = \lim_{T \to \infty} E\left(\frac{1}{T} \int_0^T (x(t) - \hat{x}(t))^2 dt\right)$$

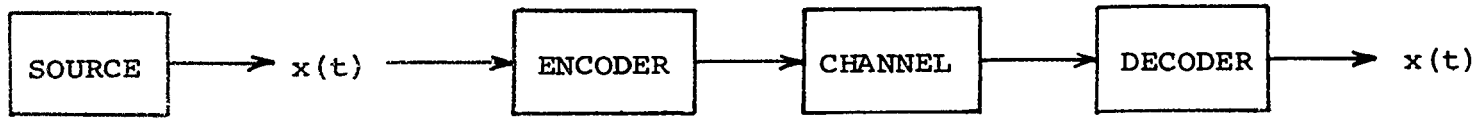

Fig. 2.1 Basic Elements in a Communication Link

If we are willing to tolerate a distortion D in the transmission of a process x(t) the minimum amount of channel capacity required for such transmission can be determined from the <u>rate distortion function</u> of the x(t) process, which we denote by R(D).

Before mathematically defining the rate distortion function for a process it is worthwhile to discuss its properties and how it is used. In Fig. 2.2 below we have what might be called a typical R(D) function. If we select the value of distortion D along the distortion axis the corresponding value of R is the minimum rate at which the information source under consideration can be transmitted and still achieve a distortion D. That is,

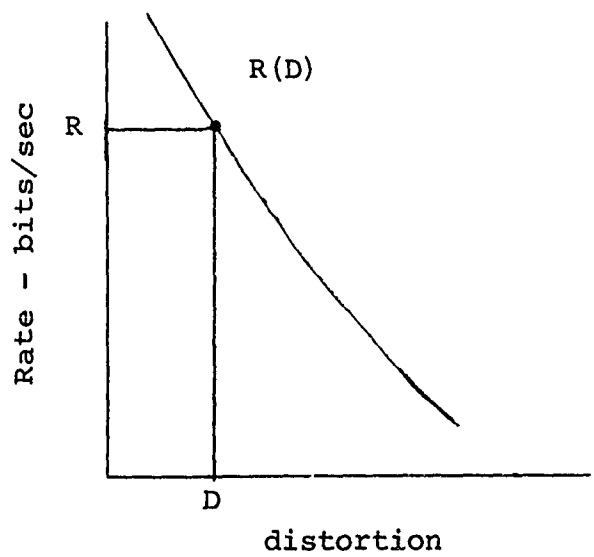

Fig. 2.2 Typical Rate Distortion Function

transmission of the source at any rate less than the amount R for a given D will result in a distortion greater than D regardless of the means used for transmission. Conversely, if we have available an amount of channel capacity, C, which is greater than the R for a given D then we know from rate distortion theory that there exists a means of encoding and transmitting the information source which can achieve a distortion equal to D.

In summary rate distortion theory is a theory which indicates what can and cannot be achieved in performance in transmitting a given source. The theory does not specify the means for achieving obtainable performance; however, by telling us what can be achieved in an absolute sense enables us to gauge whether there is enough of a reason to search for new techniques for the transmission of data.

If we are willing to tolerate a distortion D in the transmission of a process x(t) the rate distortion function for the minimum amount of channel capacity which is necessary to achieve this can be related to

$$R_T(D) = \inf \frac{1}{T} I(x(t), \hat{x}(t))$$

where $I(x(t), \hat{x}(t))$ is the mutual information between x (t) and $\hat{x}$ (t) $0 \leq t \leq T$ and the inf is taken over all communication links which will provide a distortion D. The rate distortion function is defined as

$$R(D) = \inf_T R_T(D)$$

It is immediate from the definition of the rate distortion function that if we wish to transmit the process x(t) with at most a distortion D we require a channel capacity of

$C > R(D)$. More importantly, it was shown by Shannon that the converse statement is also true. That is, if one has available a capacity $C > R(D)$ it is then possible to transmit with a distortion less than D.

In addition if we have available a channel capacity C for transmission the minimum achievable distortion D_{min} is obtained from the relationship

$$R(D_{min}) = C$$

or

$$D_{min} = R^{-1}(C) \ .$$

Of particular interest in this report is the case where the channel is bandlimited to a bandwidth W and has an additive white Gaussian noise with spectral density $N_o/2$. If the available average transmitting power is P, the capacity of this channel is given by the well known formula

$$C = W \log \left(1 + P/_{WN_o}\right) \qquad (1)$$

If our data source has a bandwidth of B and an average power S, Shannon [1] proved that the rate distortion function is bounded by

$$B \log Q/D \leq R(D) \leq B \log S/D \qquad (2)$$

where D is the mean square error and Q is the entropy power of the source. Entropy power is defined as the power of a

Gaussian source which has the same entropy as the message source, i.e.,

$$Q = \frac{e^{2H}}{2\pi e} \tag{3}$$

H being the entropy per unit time generated by the source.

If we let D_{min} denote the minimum distortion and

$$\rho_{max} = S/D \tag{4}$$

be the maximum output signal-to-noise ratio, and $\beta = W/B$ = <u>bandwidth expansion factor</u>, we can then obtain from (1) and (2) that

$$(1 + \frac{1}{\beta}\frac{P}{N_oB})^{\beta} \leq \rho_{max} \leq (\frac{S}{Q})\ (1 + \frac{1}{\beta}\frac{P}{N_oB})^{\beta} \tag{5}$$

The factor S/Q is always greater than or equal to unity since entropy power is always less than or equal to the actual power, with the equality holding when the source is Gaussian. The factor S/Q is in a sense a measure of the non-Gaussianity of the source.

For a Gaussian source, source power is equal to entropy power and the upper and lower bounds on ρ_{max} are equal giving

$$\rho_{max} = (1 + \frac{1}{\beta}\frac{P}{N_oB})^{\beta} \tag{6}$$

For the infinite bandwidth channel we have from (6) letting $\beta \to \infty$, that the maximum achievable signal-to-noise ratio is then

$$\rho_{max} = e^{P/N_o B} \tag{7}$$

Through this report we will be dealing with information sources which are assumed to have a uniform amplitude distribution.[1] In this case the upper and lower bounds on ρ_{max} differ by only 1.5 dB. In this report, where no confusion will arise, we will refer to the ρ_{max} function as the R(D) function indicating that it is the rate distortion bound on achievable performance.

For a more detailed discussion on the connection between analog modulation and rate distortion theory see the paper by Goblick [3].

2.2 Performance of Modulation Techniques and Comparison with Theoretical Bounds

In order to be able to fairly judge the performance of the MSM (Multi-Stream Modulation), discussed in Section 3 of this report we must compare MSM performance with the modulation techniques which are currently in use (FM, PCM and AM) and also compare MSM with theoretical bounds. A brief description and performance FM, PCM, and AM are given below.

Throughout this report the following definition will be used for input and output signal-to-noise ratios:

$$\rho_i = \text{Input (SNR)} = P/N_o B \tag{8}$$

[1] This is an idealized assumption which enables the theoretical calculations to be performed.

where P is the average power which is to be transmitted, $N_o/2$ is the noise power density of the channel noise and B is the bandwidth of the information process which is to be transmitted,

$$\rho_o = \text{Output (SNR)} = S/D \tag{9}$$

where S is the average power of the information process and D is the mean square error made in reconstruction of the information process by the receiver.

2.2.1 Frequency Modulation

Frequency modulation is historically the first practical modulation method devised which uses bandwidth instead of power for obtaining increased noise immunity. Figure 2.3 shows the basic elements of an FM system. The operation of the modulator is clear from the figure. In the demodulator the limiter is used for the suppression of noise peaks and the discriminator puts out the derivative of the phase of its input.

The performance curves for this FM system are given in Fig. 2.4. In calculating the performance we have assumed that the spectrum of the modulating signal is flat over its bandwidth and that the information is being transmitted over a band limited additive Gaussian noise channel. The factor β is the bandwidth expansion factor. Since the bandwidth of the frequency modulated signal has no finite limit its output bandwidth is taken to be that frequency band, centered about the carrier frequency, which contains 99 percent of the power of the output of the modulator.

In Fig. 2.4 can also be seen the difference in performance between the theoretically obtainable performance and FM performance for a variety of bandwidth expansions. Note the large gap between R(D) and the FM curves.

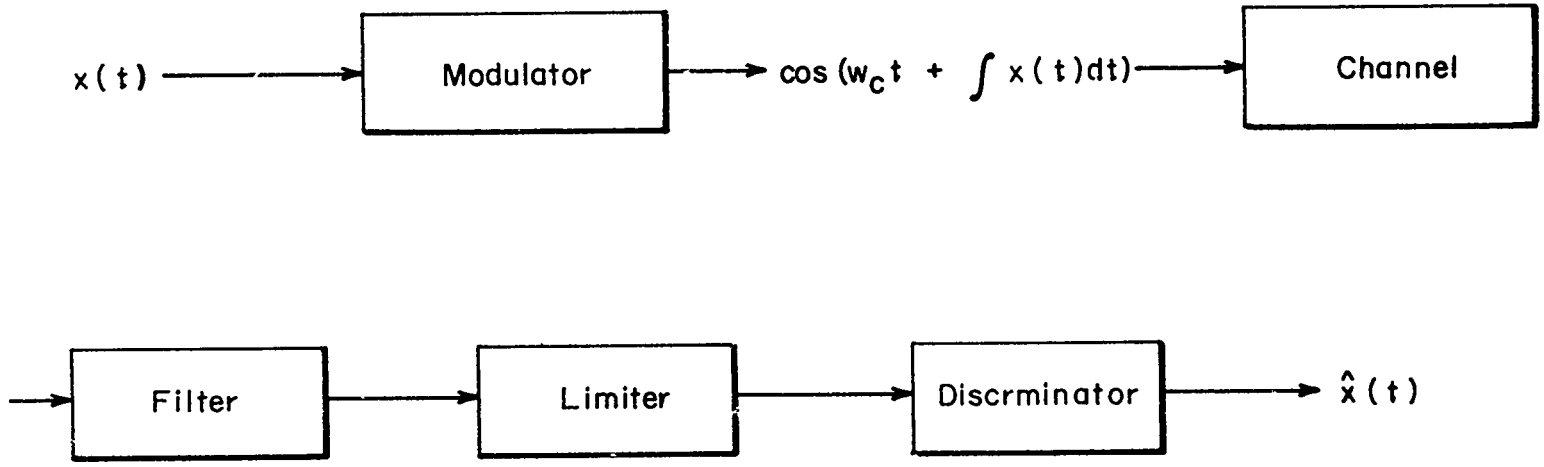

Fig. 2.3 Block Diagram of the Principal Components of an FM System

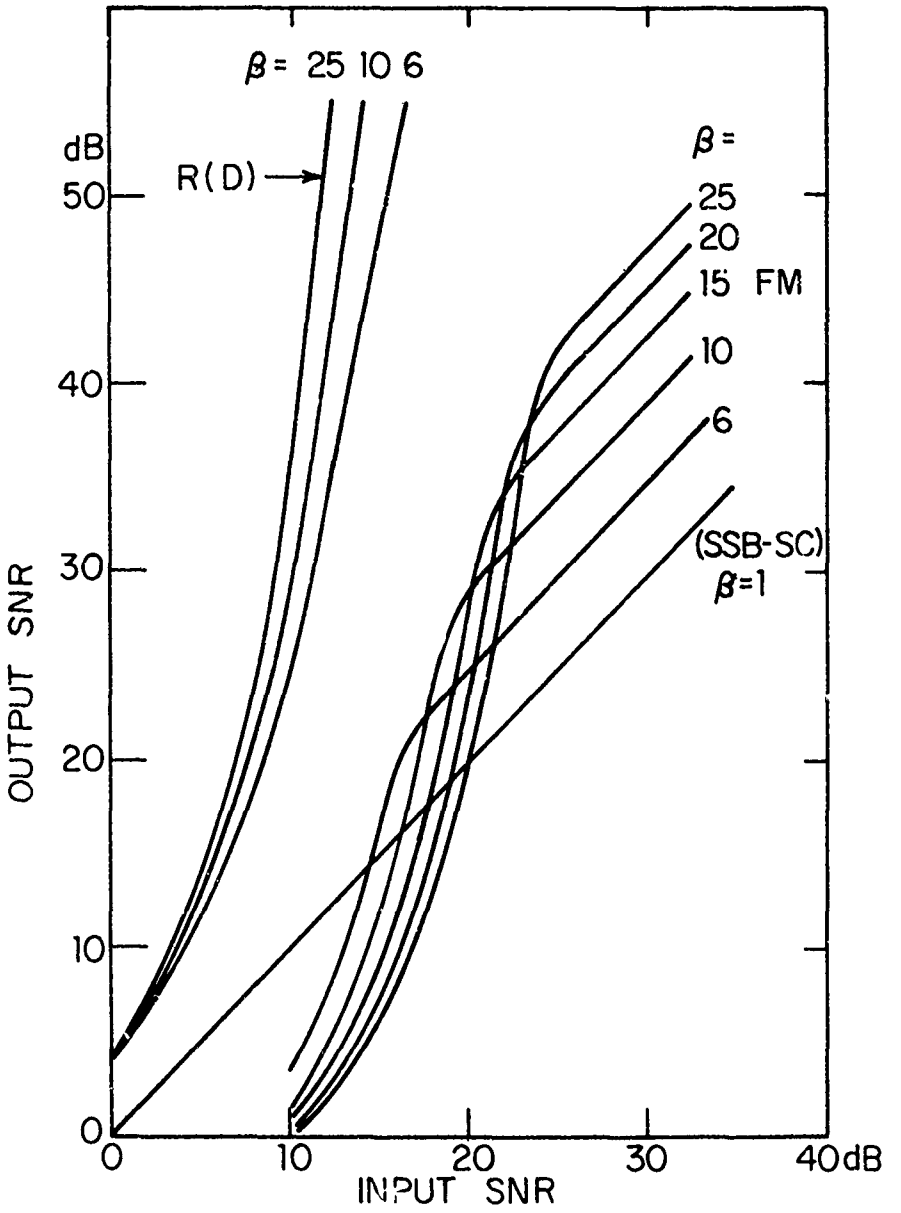

Fig. 2.4 Comparison of FM and AM with the Bound on Theoretical Performance for Various Expansions

The expression we have used for input versus output SNR is based on the work of Rice [4] and Bello [5] and is given by

$$\rho_o = \frac{1}{e^{-2\rho_i} + 72\beta^{-1} e^{-\rho_i}\sqrt{\frac{1/12 + \rho_i/18}{\pi\rho_i}} + 12\beta^{-3}\rho_i^{-1}}$$

A derivation of this expression is given in Bussgang and Gish [6].

2.2.2 Pulse Code Modulation

PCM was the first digital modulation method which made efficient use of bandwidth in the transmission of analog data. The basic elements of this system are shown in Fig. 2.5. The source waveform x(t), of bandwidth B, is sampled at the Nyquist rate of R = 2B samples/sec. Each of the samples is quantized into N bits. The bits are then transmitted over the channel, detected at the receiver, and then converted back into sample values by the A/D converter. The analog waveform is then recovered by feeding the sample values into a low pass filter. Performance of PCM was first analyzed in a paper by Oliver, Pierce and Shannon [7] and more recently in a paper by Viterbi [8]. It should be noted that two limiting properties of PCM systems are:

(1) The system has no memory, i.e., each input sample is processed independently.

(2) No cognizance is taken of the fact that certain parts of the message are more important than others.

The mean square error made in transmitting a signal by PCM consists of two terms

$$D = D_q + D_c$$

where D_q is the mean square error made in quantizing the input sample and D_c is the mean square distortion caused by effects

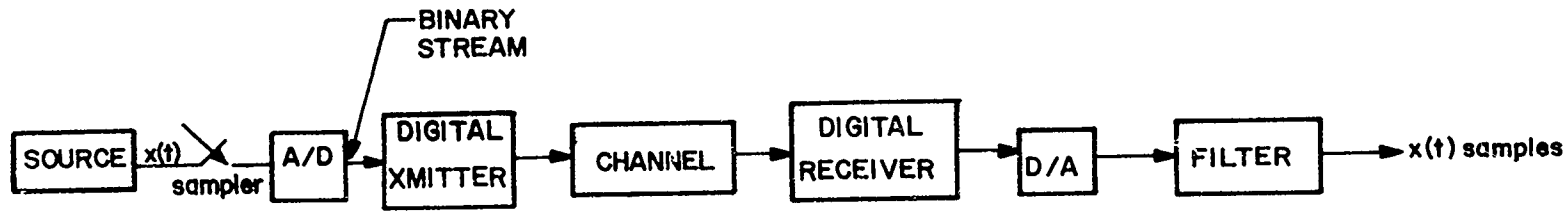

Fig. 2.5 BASIC ELEMENTS OF A PCM SYSTEM

of the channel. If we take the amplitude of the input process to be uniformly distributed over the interval [-A, + A] the quantization error is given by

$$D_q = \frac{A^2}{3 \cdot 2^{2N}}$$

After the process of A/D conversion, the input sample has the quantized representation which we denote by

$$x_q = A \sum_{i=1}^{N} a_i 2^{-i}$$

where the a_i take on the values $\pm$ 1. If a channel is memoryless, as is the case with the additive Gaussian noise channel, bit errors in the transmission of the a_i occur independently. If we let P denote the probability of a bit being in error we have

$$D_c = A^2 P \sum_{i=1}^{N} 4^{-i+1} = A^2 \cdot P \frac{4}{3} (1-(1/4)^N)$$

The output SNR is given by

$$\begin{aligned} \rho_o &= S/D \\ &= S/(D_q + D_c) \\ &= \frac{1}{4^{-N} + 4P(1 - 4^{-N})} \end{aligned}$$

The dependence of ρ_o on the input SNR ρ_i is a function of the means of transmission of the binary data and the dependence of the error probability of the binary transmission scheme on ρ_i. The bandwidth expansion for PCM also depends on the means used for binary transmission. We can however write

$$\beta_{PCM} = N \cdot k$$

where N is the number of bits used in quantization and k is the number of multiples of the bandwidth of the information process occupied by the binary transmission. If the binary information is transmitted by single sideband pulse then k = 1 and $\beta_{PCM} = N$.

In Fig. 2.6 which follows we have plotted PCM performance for N = 8 and k = 1, i.e., a bandwidth expansion of eight. The binary data transmission was taken to be coherent. We have also presented on this curve the FM performance and the rate distortion bound. The channel was taken to be additive Gaussian noise. This figure is particularly important in that it was for $\beta = 8$ for which the experimental breadboard was designed. The breadboard, in addition to having the MSM mode also has a PCM capability for $\beta = 8$. The curve SS-AM is for single side-band AM.

2.2.3 Pulse Amplitude Modulation/PCM

The term Pulse Code Modulation, usually refers to those transmission systems as shown in Fig. 2.3 where the data is carried by a binary stream. In general, the digitized data can be transmitted by pulses which carry several bits of information. One such method of transmission is where the binary information is encoded into the amplitude of the transmitted pulse. Such a system we refer to as Pulse Amplitude Modulation/PCM. The block diagram in Fig.2.7 shows the structure of a PAM/PCM system, the digital logic being required to use the bits to generate pulses of the required amplitude.

A basic analysis of PAM/PCM systems was given by Gish and Bussgang in RADC technical report [6].

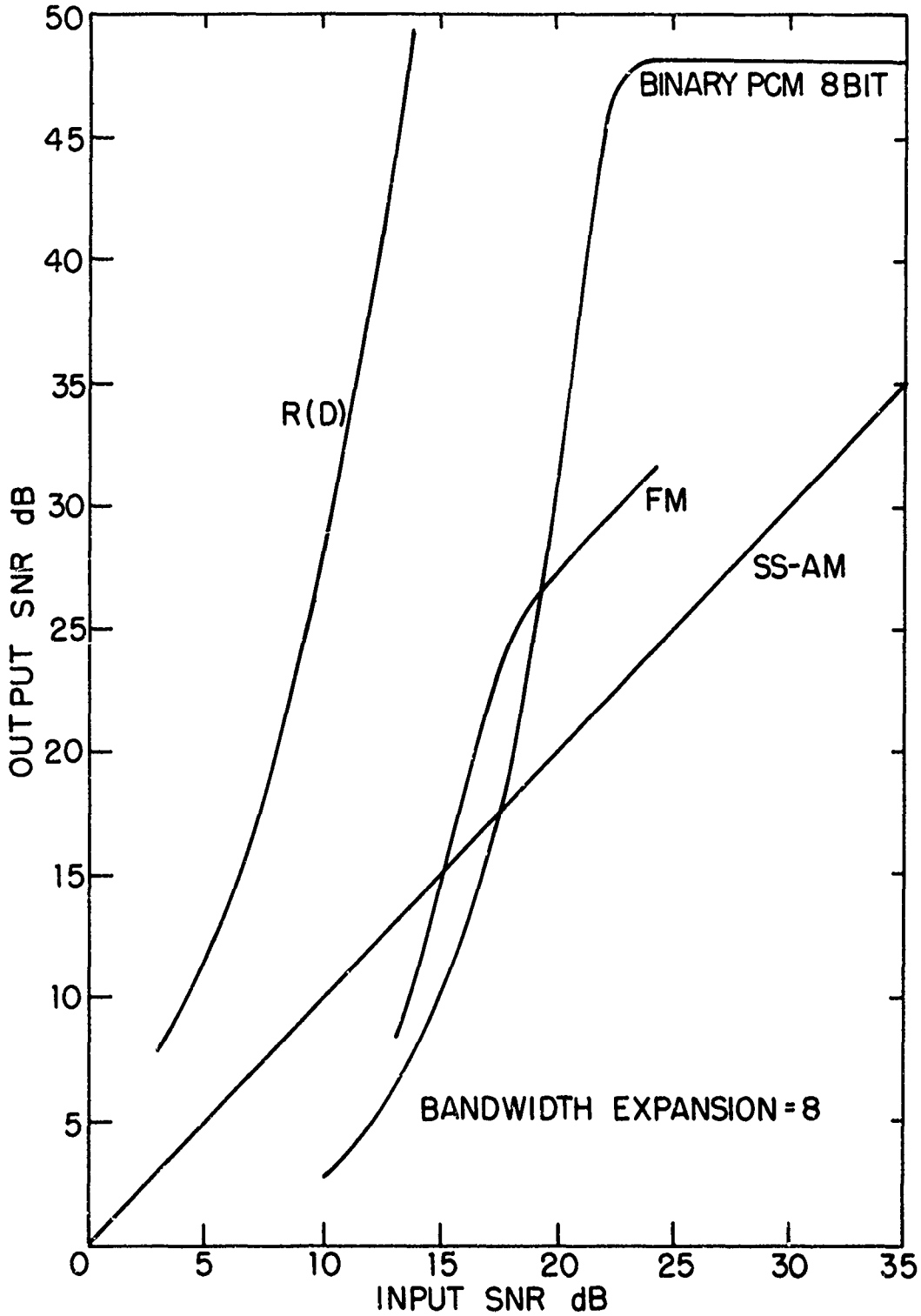

Fig. 2.6 COMPARISON OF PCM, FM AND RATE DISTORTION THEORY

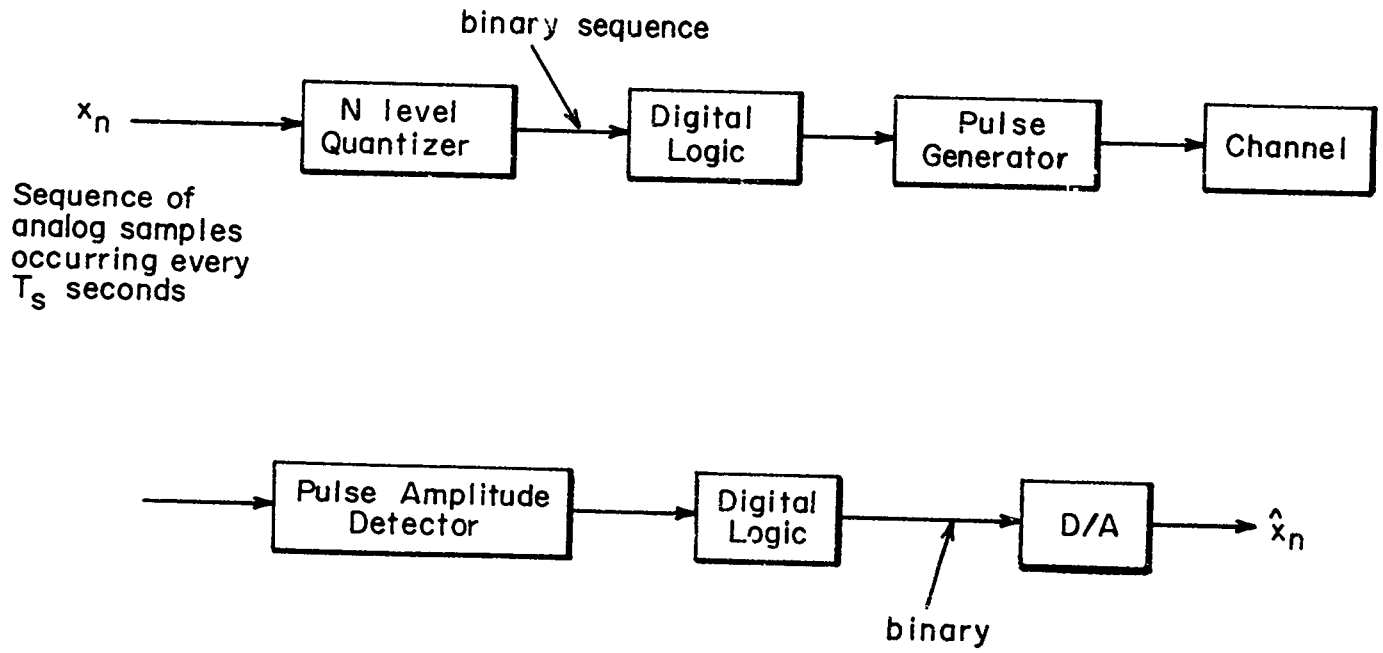

Fig. 2.7 Model of a PCM System for the Transmission of Analog Data

Referring to Fig. 2.7 we have a sequence of input samples. We assume them to be independent, uniformly distributed from (-1, +1), and quantized into $J = \log N$ bits, where N is the number of levels. The samples occur every T_s seconds. The M bits are grouped into β blocks of J/β bits. Each of these blocks is interpreted as a binary number whose value is used to modulate the amplitude of the pulse which is transmitted over the channel. Each of these pulses is transmitted in T_c seconds which gives

$$\beta = \text{bandwidth expansion}$$
$$= T_s/T_c$$

The receiver detects the pulse amplitudes and converts each received pulse into R/β bits. When R bits are accumulated the D/A converter puts out an analog value.

More specifically, consider the case where the input sample is quantized into N levels which implies that we have β pulses/sample being transmitted, each containing $\log N/\beta$ information encoded in its amplitude. The total error that the system makes in transmitting this analog value consists of two terms. The first term is due to the quantization error and the second is caused by channel noise. The mean square quantization error is given by

$$\ell_q^{\,2} = \frac{1}{3N^2}$$

In order to compute the effect of the channel noise on the analog error we first assume that the unmodulated pulse has spectrum

$$S(f) = \begin{cases} 1 & |f| \le W_c \\ 0 & \text{otherwise} \end{cases}$$

where $W_c = 1/2T_c$, being the channel bandwidth. Each pulse is modulated by one of $M = N\ 1/\beta$ values which we take as $\pm k$, $\pm 3k, \ldots$ With this system model, the average transmitted power is given by

$$P_S = E\left(\frac{1}{T_c} \int_{-\infty}^{\infty} (as(t))^2\, dt\right)$$

s(t) being the transmitted pulse and "a" the modulation E denotes the taking of the expectation. This gives

$$P_S = \frac{2W_c}{T_c} E(a^2)$$

$$= E(a^2)$$

$$= k^2 \left(\frac{M^2-1}{3}\right)$$

Now, in order to relate the channel noise we must compute the quantities

$P(i/j) =$ Probability that the ith level was received given that the jth level was transmitted

$i, j = 1, \ldots M$

The calculation of the above transition probabilities is relatively straightforward. If the noise power density is $N_o/2$ then

$$P(1/j) = Pr[n > 2k(2\,|\,1-j\,|\,-1]\quad j \neq 1$$

where n is a Gaussian random variable with variance

$$\sigma_n^2 = N_o W_c$$

Similarly,

$$P(M/j) = Pr[n > k(2|M-j| - 1] \quad j \neq M$$

and

$$P(i/j) = Pr[n > k(2|i-j| - 1)] - Pr[n > k(2|i-j| + 1)] \quad i \neq 1, M$$

The above probabilities are readily expressible in terms of error functions.

In order to use the above expression in the calculation of error performance we must condition our calculations as to which of the β pulses contained the error, since the actual pulse location will affect the analog error. To see this, consider the binary expansion of the quantized version of the input, i.e.,

$$x = \sum_{i=1}^{J} a_i 2^{-i}$$

where $a_i = \pm 1$ and $J = \log N$. In the AM/PCM system, which we are describing, it is these coefficients which we are transmitting. More specifically, the coefficients (a_i) are formed into β groups with each group determining the amplitude of one of the β pulses representing the sample. That is, if coefficients $a_j, \ldots a_{j+\ell}$ are in the kth group, the number

$$\sum_{i=1}^{\ell} a_{j+i-1} 2^{-i}$$

determines the j-th pulse amplitude. An error occurring in a pulse which represents the most significant bits will cause a larger analog error than if an error occurs in a pulse which represents less significant bits. Keeping this in mind, we are now in position to evaluate the effect of the channel on the analog error.

We have

$$D_c = \sum_{k=1}^{\beta} E(e_c^2 | k^{th} \text{ pulse transmitted}) \; PR(k^{th} \text{ pulse})$$

$$= 1/\beta \sum_{k=1}^{\beta} E(e_c^2 | k^{th} \text{ pulse transmitted})$$

where e_c denotes the error in transmission due to the channel. If we let $\ell = R/\beta$ (assumed to be an integer) it is not difficult to show that an error in the kth pulse must be weighted by a fact $2^{-2(k-1)}$. Taking this factor into account, we arrive at

$$D_c = \frac{1}{\beta} \frac{4}{3} (1-(\tfrac{1}{4})^{\beta}) \; E(e_c^2 | \text{first pulse transmitted})$$

with

$$E(e_c^2 | \text{first pulse transmitted})$$

$$= \frac{1}{M} \sum_{i=1}^{M} \sum_{j=1}^{M} (\ell_i - \ell_j)^2 P(i|j)$$

where

$$M = 2^{\ell}$$

and

$$\ell_i = \frac{1}{M} (2i-1) - 1.$$

The total mean square error is

$$D = D_q + D_c$$

It is this calculation which is used in the plotting of the curves given in Figs. 2.8, 2.9, and 2.10, which are for expansion ratios of 2, 3, and 4, respectively.

These curves show that PCM with a well-selected number of quantization levels outperforms straight SSB-AM over a limited region of signal-to-noise ratio. As any digital system, PAM/PCM does not improve with SNR beyond a certain point because of the quantization noise. Below an adequate channel SNR, PAM/PCM becomes comparable to SSB-AM in performance.

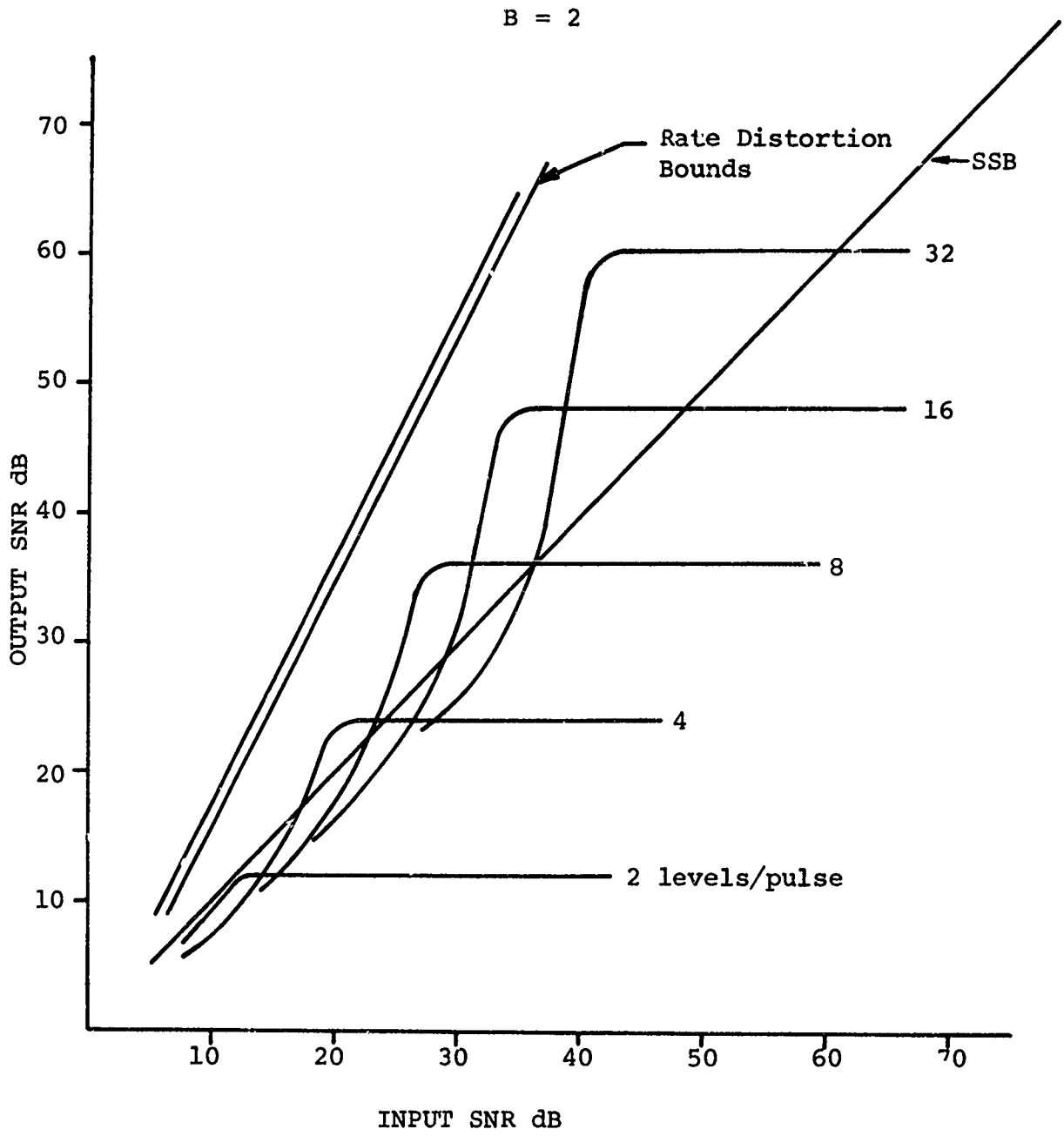

Fig. 2.8 Performance of a PAM/PCM System with a Bandwidth Expansion of 2

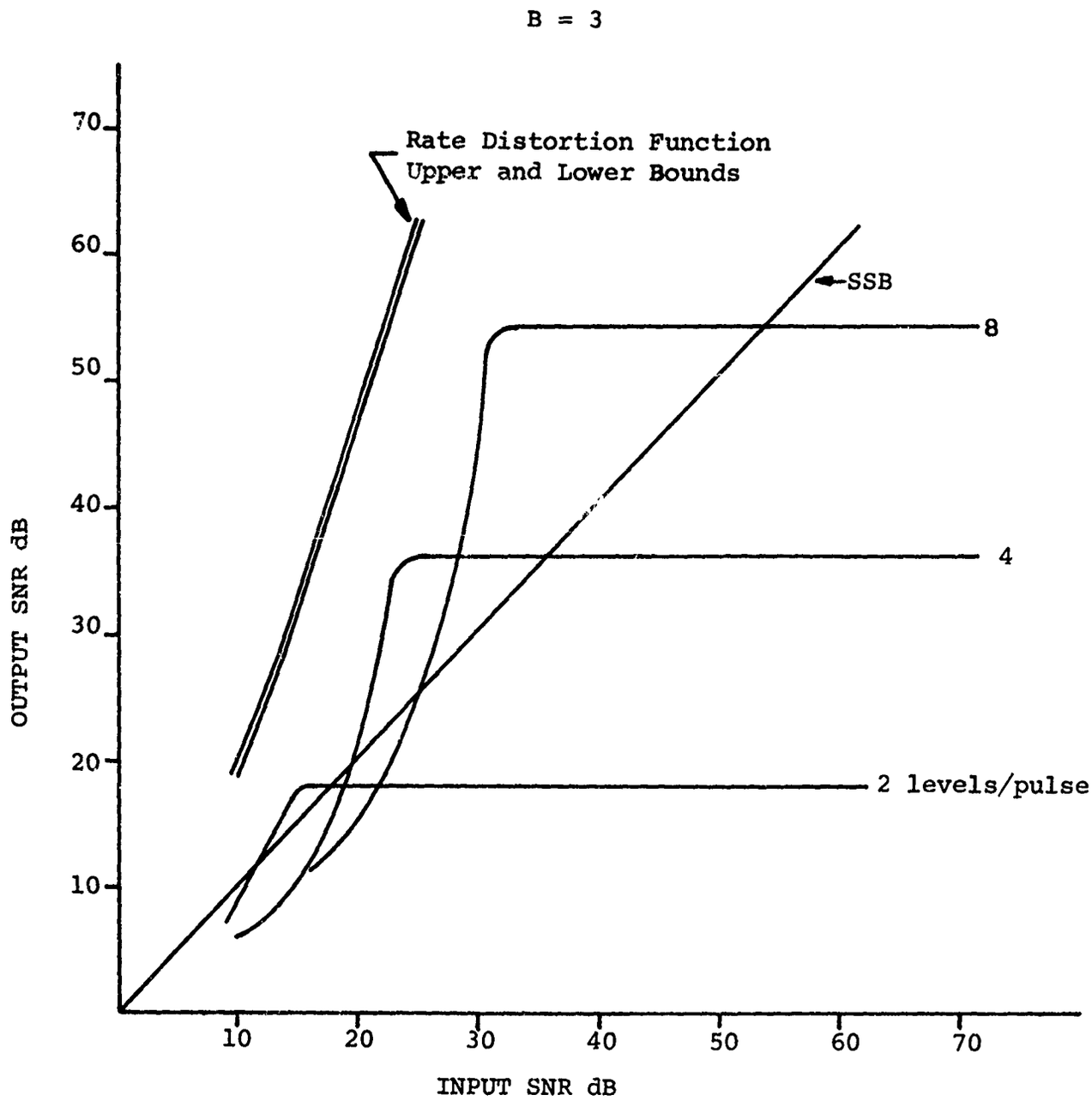

Fig. 2.9 Performance of a PAM/PCM System with a Bandwidth Expansion of 3

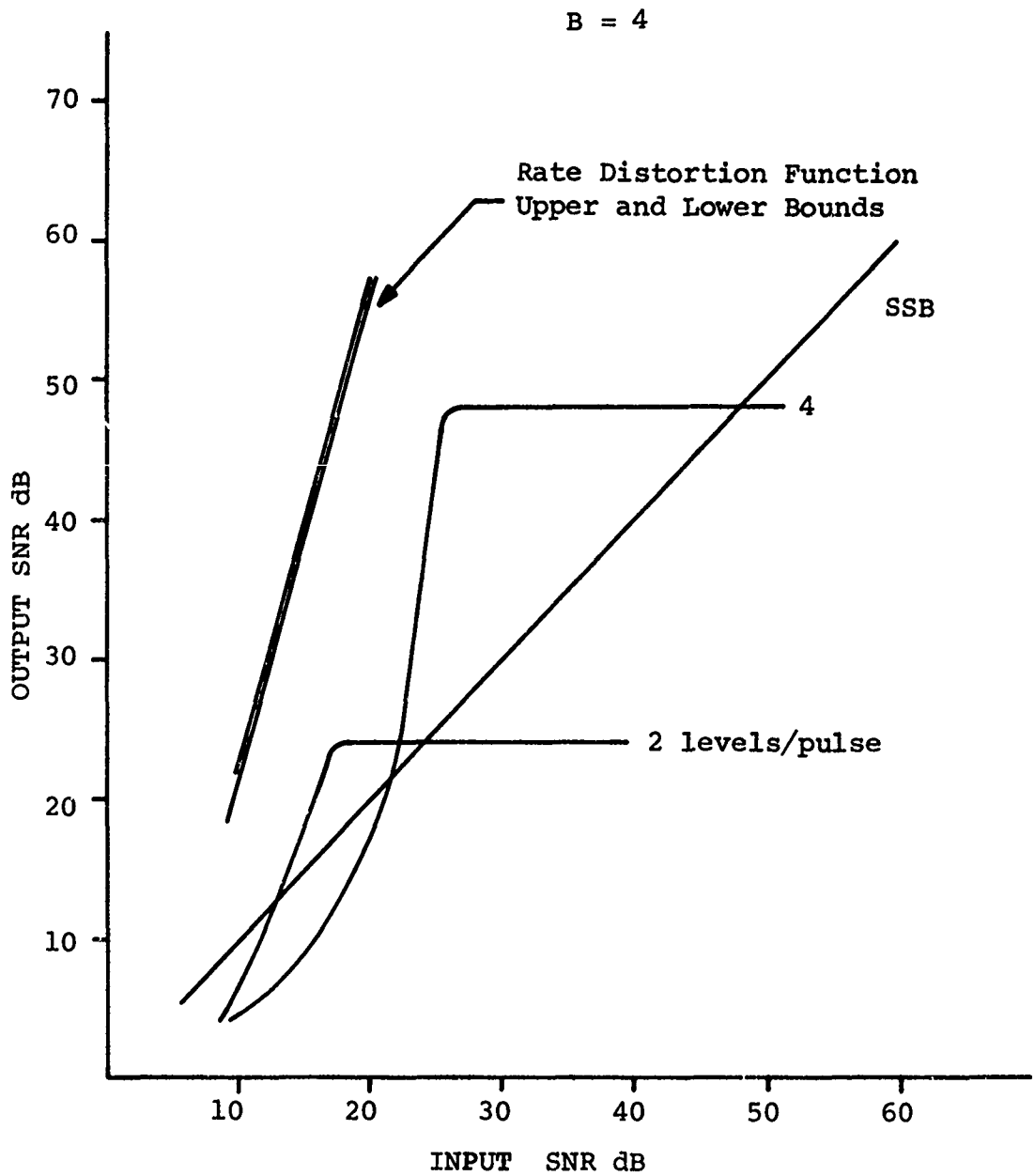

Fig. 2.10 Performance of a PAM/PCM System with a Bandwidth Expansion of 4

An alternate method of communication is a multiphase/PCM system in which the quantization levels are transmitted by one of several phases. The binary case, i.e., when only one of two phases are used will of course give the same performance as a PAM/PCM system. For higher order phase systems the same formulas will apply as in the PAM case except that the approxpriate values of P(i/j) be used. It should be noted that when phase modulation is used to transmit quantization levels rather than amplitude modulation an additional bandwidth expansion factor of two is required. This is due to the fact than an AM pulse can be transmitted single side band, while a constant amplitude phase modulated pulse will have double side bands.

2.2.4 Weighted PCM

In a weighted PCM transmission system the total available energy is distributed among the bits to be transmitted in a way as to reduce the distortion in the transmitted analog waveform. The notion of varying energy assignments was first analyzed by Bedrosian [9]. This procedure of allocation of energy can be viewed as an elementary form of coding without memory. An example illustrating this principle is given below.

Curve (1) in Fig. 2.11 shows the performance of a system in which each sample is quantized into six bits and the energy assignment to each bit is optimized to minimize the output SNR. The optimum energy assignement will be a function of the input SNR. Curve (3) gives the performance of a conventional binary PCM system with six bit quantization and the energy equally assigned to all the bits. Clearly the optimized system has uniformly greater performance than the conventional system. In particular we see that at an input SNR of 15 dB there is an 8.5 dB gap. This represents a substantial difference in performance. The bit energy assignments can be achieved by variation of the bit amplitudes.

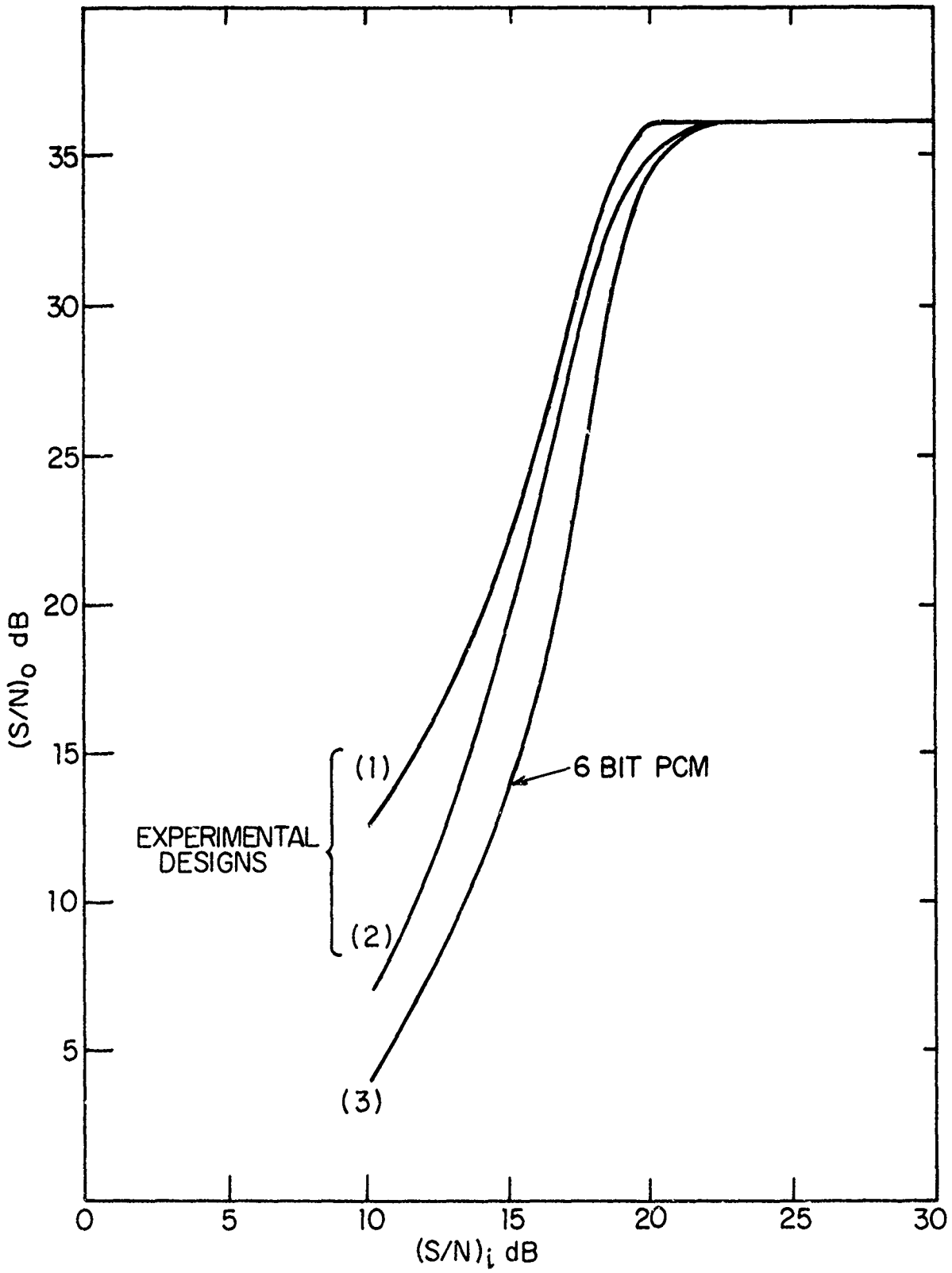

Fig. 2.11 Performance of Energy Coded and Uncoded PCM Systems - Six-Bit Quantization.

The system whose performance is given by curve (2) was permitted no variation in pulse amplitude and energy could be varied only by repeating bits for the channel. With these constraints we repeated the most significant bit three times, the second and third most significant bits twice, and the last three bits were transmitted uncoded. This simple scheme which we are using to illustrate energy coding has a bandwidth expansion of 10 and for

$$(S/N)_i = 15 \text{ dB}$$

$$(S/N)_o = 19.5 \text{ dB}$$

The curve shows an improvement of 6 dB over binary PCM with an expansion of 6 which is the optimum PCM system for the range of interest. This difference will only increase in favor of weighted PCM if we compare to PCM systems with other bandwidth expansion, e.g., bandwidth expansion also of 10.

SECTION III

MULTISTREAM MODULATION

3.1 General Description of MSM

Multistream Modulation is a digital method of analog modulation. In this method of modulation the analog signal is first sampled and quantized into a stream of binary digits each of different significance. Digital coding is then selectively applied to the digitized signal. The coding is applied so that the most important parts of the signal receive the most protection.

A block diagram of a MSM system is given in Fig. 3.1. We have the analog source being converted into streams of bits at the Nyquist rate of the source. The bit streams then enter a digital coding network which applies redundancy in a prescribed manner with the greater protection going to the more significant bits. The assignment of more protection to the more significant bits may mean a corresponding reduction in protection for the least significant bits. In addition, the assignment of redundancies by the coding network must take into account how the encoded data is assigned to channel symbols, since the assignment of bits to symbols can in itself provide a certain degree of coding. These ideas will become clearer as specific examples of MSM are considered.

It should be noted that by regarding the output of the A/D as streams of bits of different significance enables one to have a coding network which make efficient use of the time history of the process.

The concept of applying more protection to the more significant bits has appeared in other works. These works have been concerned with particular aspects of this concept and not with the development of a new approach to modulation. In the

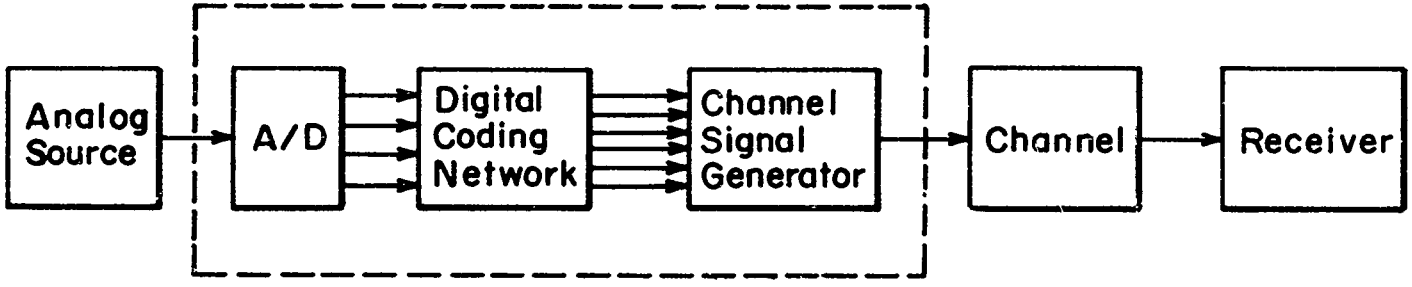

Fig. 3.1. BASIC STRUCTURE OF A MULTISTREAM MODULATOR

work of Bedrosian [9] different amounts of energy were assigned to different bits. This scheme is essentially a zero memory coding technique. Masnick & Wolf [10] considered the general properties of codes which gave unequal error protection. Apple & Wintz [11] have considered the application of codes to bits of different significance, however no attempt was made to constrain bandwidth and relate the coding to analog modulation.

3.2 MSM with Individual Stream Coding

MSM with coding applied to individual streams is an important special case of the coding network shown in Fig. 3.1. The reason for this being that most known codes are designed to operate on individual streams rather than on vectors (i.e., multiple streams). The structure of MSM with individual stream coding is shown in Fig. 3.2.

In the remainder of this report we will be concerned solely with this structure. It is a special case of this structure which we have implemented. In the following paragraphs we will examine what the important parameters of the system are and how the performance of such a system is designed and evaluated.

The output of our analog source is a message $x(t)$ of bandwidth B which we wish to transmit over a channel of bandwidth $W = \beta B$. The available average power for the transmission of the signal is P.

The message $x(t)$ is sampled at the Nyquist rate $R = 2B$ samples/sec. The samples are converted into N-bits by the A/D converter, and we can represent the output of the A/D in the form:

The data from the encoders goes to the channel signal generator which must put this data out on the channel, subject to the average power and bandwidth constraints. The nature of the signals which the signal generator can put out has a strong bearing on the nature of the system. In general terms the signal generator puts out a waveform which we will denote by $p(t,\underline{\alpha})$ where the parameter $\underline{\alpha}$ depends on the bit sequence and is used to modulate the waveform without changing its bandwidth. For example, the factor $\underline{\alpha}$ can be indicative of amplitude modulation or phase shift of the basic waveform put out by the signal generator.

The waveforms $p(t,\underline{\alpha})$ have a bandwidth βB and a duration T_c*. With T_c being pulse duration the number of pulses which can be put out by the channel signal is given by

$$\gamma = T_c/T_s \tag{10}$$

that is, for each input sample which enters the MSM γ samples are sent by the signal generator. This is a direct consequence of the bandwidth limitation and the nature of the waveform used by the signal generator. The output signal which is transmitted by the MSM operating over a period of time is given as

$$y(t) = \sum_n p(t - nT_c, \underline{\alpha}_n) \tag{11}$$

---

*Note that by time duration of the pulse is actually meant the minimum time separation between waveforms so that there is no intersymbol interference.

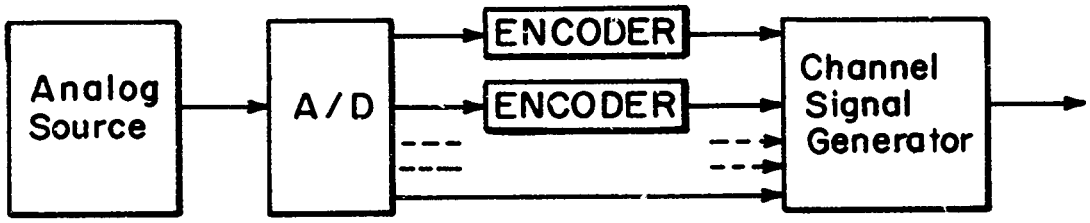

Fig. 3.2. MULTISTREAM MODULATOR WITH INDIVIDUAL ENCODERS

$$
\begin{matrix}
a_{11} & a_{12} & \cdots & a_{1j} & \cdots & a_{1k} \\
\vdots & & & & & \\
a_{i1} & \cdots & & a_{ij} & \cdots & a_{ik} \\
\vdots & & & & & \\
a_{N1} & \cdots & & a_{Nj} & \cdots & a_{Nk}
\end{matrix}
$$

Fig. 3.3. Representation of Bit Streams from A/D.

where the ith row of the matrix represents the ith most significant bit from k samples and the jth column represents the N bits from the A/D for the quantization of the jth sample.

Following the A/D conversion the bits from each of the streams enter the appropriate coding device for that stream. The encoder for the ith stream will require k_i information bits as input and put out a code word of N_i bits. The rate of the ith code is $r_i = k_i/N_i$.

Since the k_i can in general be arbitrary, a certain amount of buffering not shown in Fig. 3.2 will have to take place in order to implement the encoding.

Since samples are entering the A/D at a rate of 2B samples/sec., and since each sample is quantized into N bits, we have that in the sampling time interval $T_s = 1/2B$

$$M = \sum_{i=1}^{N} r_i^{-1}$$

bits being generated at the output of the coders. This corresponds to an average data rate of

$$R = M/T_s \text{ bits/s}$$

The data from the encoders goes to the channel signal generator which must put this data out on the channel, subject to the average power and bandwidth constraints. The nature of the signals which the signal generator can put out has a strong bearing on the nature of the system. In general terms the signal generator puts out a waveform which we will denote by $p(t,\underline{\alpha})$ where the parameter $\underline{\alpha}$ depends on the bit sequence and is used to modulate the waveform without changing its bandwidth. For example, the factor $\underline{\alpha}$ can be indicative of amplitude modulation or phase shift of the basic waveform put out by the signal generator.

The waveforms $p(t,\underline{\alpha})$ have a bandwidth βB and a duration T_c*. With T_c being pulse duration the number of pulses which can be put out by the channel signal is given by

$$\gamma = T_c/T_s \tag{10}$$

that is, for each input sample which enters the MSM γ samples are sent by the signal generator. This is a direct consequence of the bandwidth limitation and the nature of the waveform used by the signal generator. The output signal which is transmitted by the MSM operating over a period of time is given as

$$y(t) = \sum_n p(t - nT_c, \underline{\alpha}_n) \tag{11}$$

---

*Note that by time duration of the pulse is actually meant the minimum time separation between waveforms so that there is no intersymbol interference.

An important special case for MSM is when the waveform generator puts out signals of the form of the well known sinc function

$$p(t,\alpha) = \alpha \frac{\sin\ (2\pi\beta Bt)}{2\pi\beta Bt} \tag{12}$$

for which

$$T_c = \frac{1}{2\beta B} \tag{13}$$

The spectrum of the sinc function is that over a bandwidth βB. The output waveform is then

$$y(t) = \sum_n \alpha_n \frac{\sin\ 2\pi\beta B(t - nT_c)}{2\pi\beta B(t - nT_c)} \tag{14}$$

where α_n is an amplitude derived from the encoded bits. It is this model for the channel signal generator with the incorporation of bits into signal amplitudes, on which the designs for the experimental breadboard were made.

3.3 Design and Performance of MSM

3.3.1 Systematization of Design

In the previous subsection the various factors entering into the design of a MSM system were discussed. At present there exists no satisfactory systematic approach to the design for a MSM. The most effective approach is one based on the intuition of the designer coupled with a trial and error procedure.

There are several reasons for the difficulty in finding a systematic approach to MSM design, the first of which is the very large number of parameters involved. These parameters include the number of bits N in the initial A/D conversion, the amount of redundancy which should be assigned to each stream and the possible assignment of encoded bits to channel waveforms. Secondly, information needed for the calculation for performance is not available. That is, the bit error probability for codes is by and large unavailable, and in those cases where they do exist, they exist mainly for the binary symmetric channel.

Thirdly, the criteria for what makes one modulation system preferable to another will vary from user to user, A modulation system must work over a range of SNR's and it is the shape of the ρ_o vs ρ_i curve which is important to a user and not the value of the curve at a specific point. This is illustrated by Fig. 3.4 shown below. The preference may be for characteristic (1) if the region of operation is primarily high ρ_i or characteristic (2) if one is willing to trade performance at the high end for a shift in the threshold region.

3.3.2 Calculation Details

Before getting into specific system designs with their specific performance calculation, it will be worthwhile to examine in more general terms what is involved in a calculation.

As in the calculation of PCM performance we can decompose the error into two independent terms

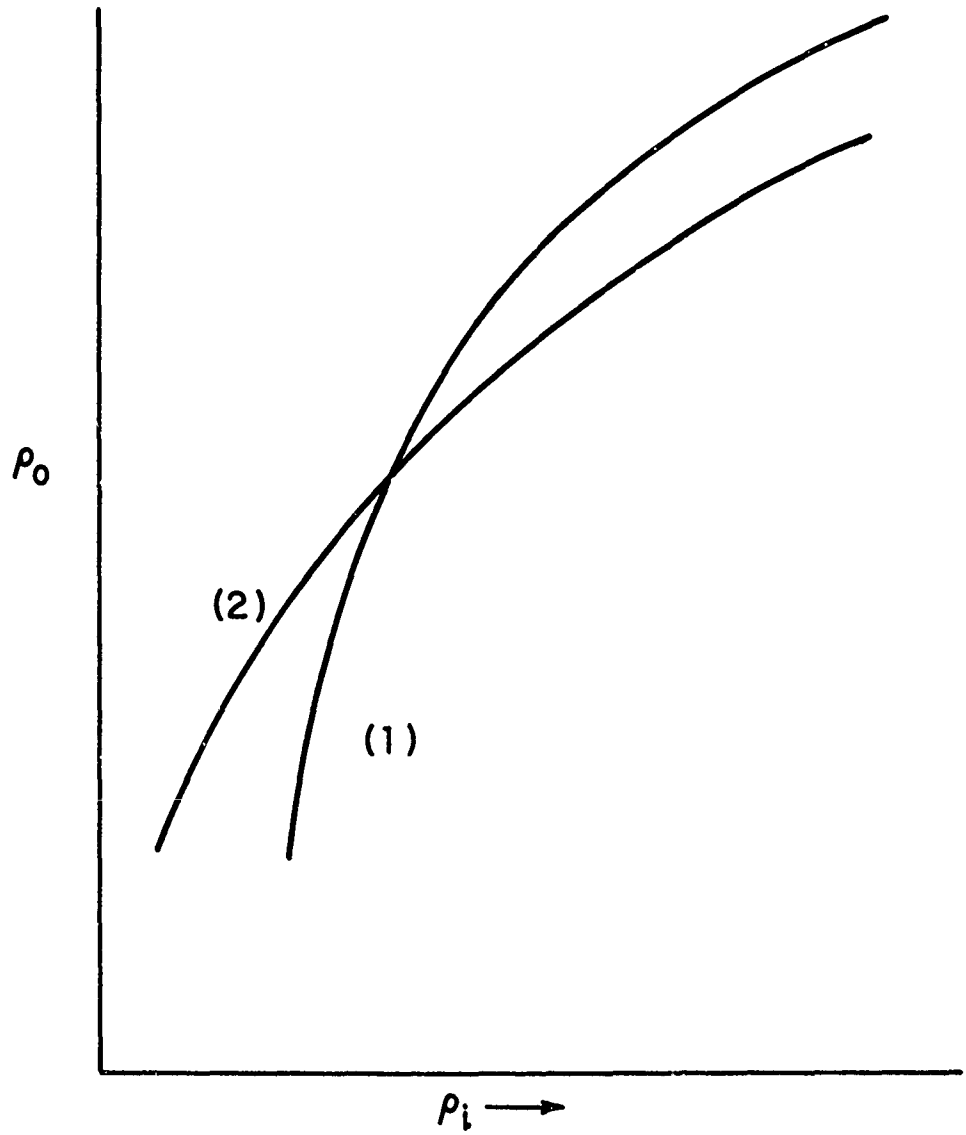

Fig. 3.4. EXAMPLE OF ALTERNATIVE MODULATION CHARACTERISTICS

$$D = D_q + D_c \tag{15}$$

where D_q is the mean square error due to quantization and D_c is the mean square error due to the effects of the channel. When the quantization by the A/D is into N bits

$$D_q = \frac{A^2}{3 \cdot 4^N} \tag{16}$$

where we have assumed, as before, that the input samples are uniformly distributed over the interval [-A,+A].

Let us represent a quantized sample as

$$x_q = A \sum_{i=1}^{N} a_i 2^{-i} \tag{17}$$

and

$$\hat{x}_q = A \sum_{i=1}^{N} \hat{a}_i 2^{-i}$$

as the value recovered by demodulating the MSM.

We then have

$$D_c = E\,(x_q - \hat{x}_q)^2$$

$$= A^2 \sum_{i=1}^{N} \sum_{i=1}^{N} E(a_i - \hat{a}_i)(a_j - \hat{a}_j) 2^{-(i+j)} \tag{18}$$

It is important to note that the bit errors in MSM will not, in general, all occur independently and the evaluation of (18) will require knowledge of the joint probability density of errors. This nonindependence of errors arises from the fact that the encoding process has given us a greater number of bits than we originally had and in order to meet the bandwidth constraint several bits will have to be carried by a single transmitted waveform.

The basic problem in evaluating performance is in the evalution of expression (18). With expression (18) calculated it then becomes possible to calculate a curve of ρ_o versus ρ_i.

3.4 Specific Designs

In choosing a design for illustrating the principles of MSM the first consideration was that it should be designed to operate for a bandwidth expansion which was commonly used for PCM and also for FM. The primary design was made for $\beta = 8$ since 8 bit PCM is fairly common and this is also a good bandwidth expansion for FM. A second design was made for $\beta = 4$. A fourfold bandwidth expansion is not enough for a meaningful PCM system and FM offers the only viable comparison for $\beta = 4$.

3.4.1 Design for $\beta = 8$

It should be realized that the design which is discussed below is the outcome of a trial and error procedure in which there were several false starts and a gradual evolution of the accepted. The basic elements in the design of the modulator that was built are shown in Fig. 3.5.

We have, as shown in the figure, the analog source which is sampled at the rate

$$R = \frac{1}{T_s} = 2B$$

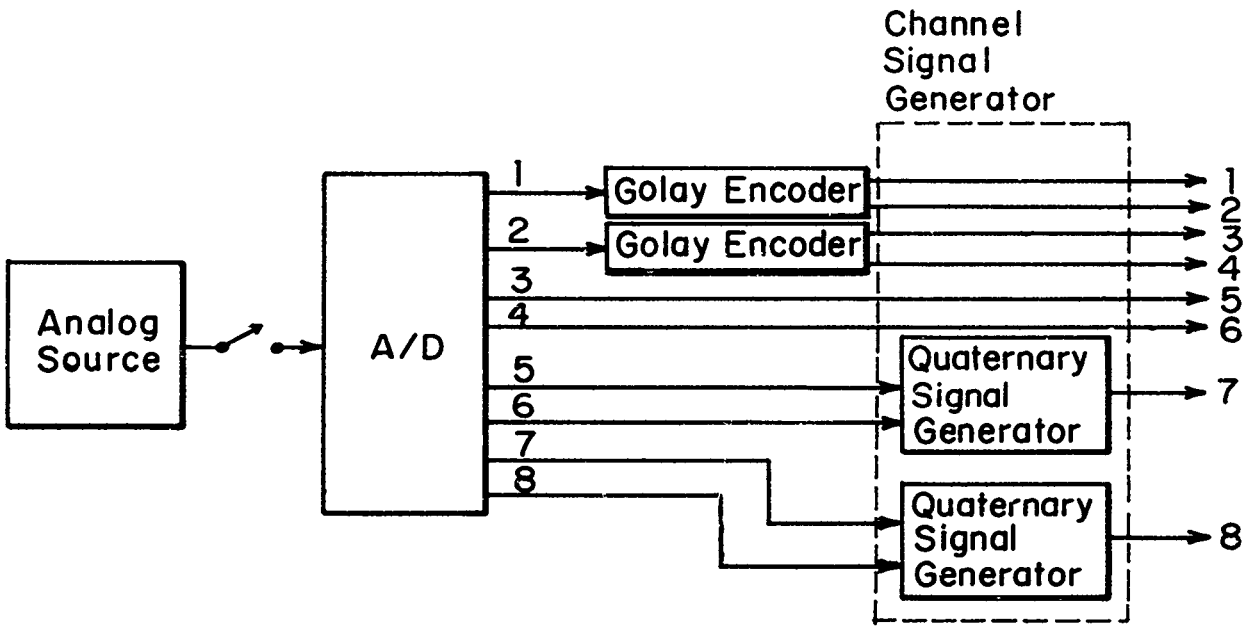

Fig.3.5 SPECIFIC DESIGN OF A MULTISTREAM MODULATOR FOR BANDWIDTH EXPANSION OF 8

In fact $B = 4$ kHz and $\beta B = 32$ kHz. The samples are quantized into $N = 8$ bits.

The first two bit streams, which are the streams of the two most significant bits, are encoded by Golay encoders. A Golay code takes 12 information bits and puts out a codeword of 23 bits. The Golay code has the property that it will correct all patterns of three or less errors which occur in the pattern of twenty three. The rate of the Golay code is slightly less than one half which for our purposes we will take as equal to 1/2. The figure indicates that for each bit entering the encoder two bits leave.

The remaining streams, that is streams 3-8, receive no separate encoding. Thus before the bits have entered the channel signal generator, we have the situation where 8 bits from the A/D have given rise to 10 bits from the coding network.

It is now the function of the channel signal generator to take these 10 bits and transmit them over that channel with the allotted power and bandwidth. This operation is nontrivial in that the means of transmission can drastically alter the protection provided by the encoding network. In fact, the coding network and channel signal generator must be designed jointly in order to arrive at an efficient design. This is in fact one of the causes of why a systematic design procedure is so difficult.

Taking

$$T_c = \frac{1}{2\beta B} \tag{19}$$

implies that the channel signal generator has 8 transmissions of its basic waveform to transmit 10 bits of information in the time interval T_s. This is accomplished by using binary transmission to transmit the bits from the Golay encoders and also using binary transmission for streams 3 and 4 with streams 5 through 8 being combined to give rise to transmission of two quaternary signals. Refer to Figure 3.5.

With this scheme the bit errors on streams 1 through 4 will occur independently from stream to stream while errors on streams 5 and 6 and 7 and 8 will be dependent.

The input SNR is defined as

$$\rho_i = \frac{P}{N_o B} \tag{20}$$

This can be rewritten in the form

$$\rho_i = \frac{E/T_s}{N_o B} = \frac{2E}{N_o} \tag{21}$$

where E is the total amount of energy available in the time interval T_s.

The design we are considering allows the same amount of average energy to each transmission on the channel. In general there are β transmissions in time interval T_s and this gives the following amount of energy per transmission

$$E_p = E/\beta = E/8 \tag{22}$$

In order to further evaluate the performance of the system design we are specifying, we must know more about the receiver of which little has been said thus far. The receiver, in terms of equipment, is more difficult to

implement, however in terms of calculating the performance we only have to know how the receiver is performing the processes of decoding and bit detection.

Ideally, for the decoding of the Golay code, maximum likelihood decoding would be optimal, however this is not a reasonable means in terms of hardware implementation. The simplest means of decoding* is to decode the received word bit by bit and then use a conventional method of decoding the Golay code such as the Kasami decoder [12] or a permutation type of decoder. The problem with this approach is that several dB in performance are being sacrificed as compared to optimal decoding.

As a compromise between maximum likelihood decoding which would require a bank of 1024 matched filters at the receiver and conventional bit by bit decoding we had decided upon implementing a technique called Weighted Erasure Decoding (WED) developed recently by Weldon [13]. This technique provides bit error performance between the extremes of optimum and bit by bit and only requires a moderate amount of complexity above what is required by the conventional decoding of the Golay code by a Kasami or permutation decoder.

The method used for its implementation is described in Section 4. For the purpose of calculating the performance of MSM we are primarily interested in how WED affects the probability of a bit being in error as a function of E_b/N_o, where E_b is the amount of energy expended per information bit transmitted. This information is shown in Fig. 3.6, which is taken from [13].

* This is referred to a decoding on the basis of hard decision.

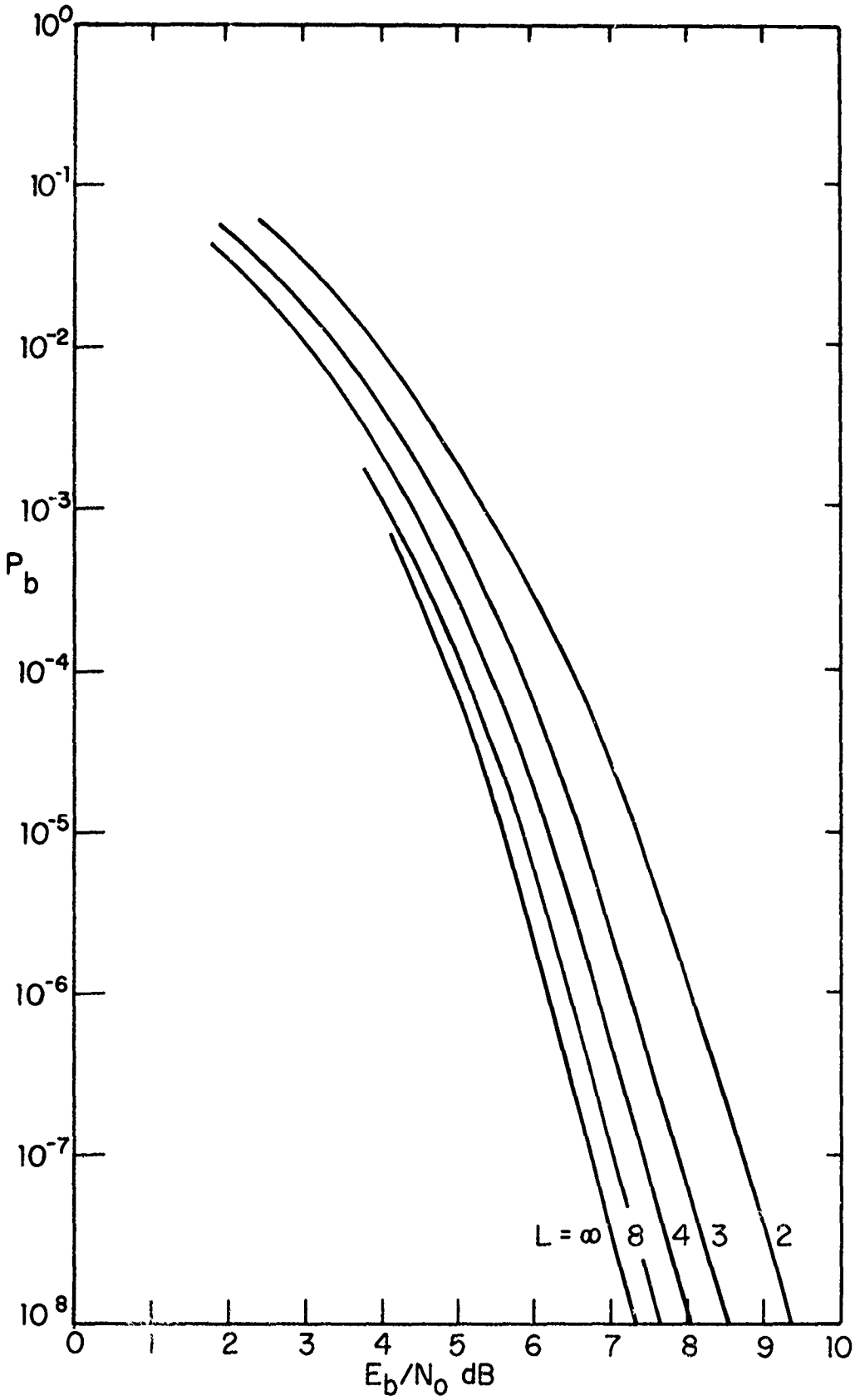

Fig. 3.6 Performance of Weighted Erasure Decoding of the (23,12) Golay Code for Various Degrees of Quantization, (from Weldon [13]).

The parameters associated with each of the curves in the figure denote the degree of quantization employed by the WED scheme. In WED the received binary transmission plus Gaussian noise is quantized into L levels. L = 2 denotes the performance of decoding on the basis of hard decisions.

The performance given by these curves can only be an approximation to the performance which we can expect from the equipment for several reasons. First, the curves in the figure are upper bounds on performance. Secondly, the method of decoding for which the curves were calculated are an approximation to the way the equipment performs the decoding. Thirdly, and perhaps most important, is that the curves are calculated on the basis of a quantization which can be adjusted of the basis of E_b/N_o, whereas in the equipment a single quantization rule must be used for all values of E_b/N_o. Notwithstanding these deviations between theory and practice, the L=8 and L=4 curves were used in the calculations of performance.

Streams 3 and 4 are transmitted straight binary and since the transmission is synchronous the probability of a binary error on streams 3 and 4 is given by the well known equation

$$P_i = Q\left(\sqrt{\frac{2E_i}{N_o}}\right) \quad i = 3,\ 4 \tag{23}$$

where

$$Q(x) = \frac{1}{\sqrt{2\pi}} \int_x^{\infty} e^{-u^2/2}\, du \tag{24}$$

The bits from streams 5 and 6 are combined and are used to determine the amplitude of a quaternary transmission. The bit pair (5,6) are looked on as representing a number from 0 to three with the (0,0) pattern giving rise to the lowest

transmitted level and (1,1) to the highest.

Having described how all the bits from the A/D are handled we are now in a position to evaluate performance. We can write

$$D_c = E\left(\sum_{l=1}^{8} (a_i - \hat{a}_i)\ 2^{-i}\right)^2 \qquad \text{where } a_i = \pm 1$$

$$= \sum_{i=1}^{8} \sum_{j=1}^{8} E(a_i - a_i)\ (a_j - a_j)\ 2^{-(i+j)}$$

$$= \sum_{i=1}^{4} E(a_i - \hat{a}_i)^2\ 2^{-2i} + \sum_{i=5}^{6} \sum_{j=5}^{6} E(a_i - \hat{a}_i)\ (a_j - \hat{a}_j)\ 2^{-(i+j)}$$

$$+ \sum_{i=7}^{8} \sum_{j=7}^{8} E(a_i - \hat{a}_i)\ (a_j - \hat{a}_j)\ 2^{-(i+j)} \qquad (25)$$

We are able to break down the error term into this last expression because the probability of error for the first four most significant bits are independent of each other whereas the errors made in the transmission of bits a_5, a_6, a_7 and a_8 are not. An error made in the transmission of a_5 is correlated with that of a_6 and similarly the error occuring in a_7 is correlated with a_8. This occurs because a_5 and a_6 (and also a_7 and a_8) are transmitted by a single quaternary pulse.

The expression for the error can be now written

$$D_c = 4 \sum_{i=1}^{4} 4^{-i} P_i + 1.5(4^{-5})\ P_{q1} + 1.5\ (4^{-7})\ P_{q2} \qquad (26)$$

where P_i i=1,4 is the probability of bits i=1,4 being in error, respectively P_{q1} and P_{q2} represent the probabilities of jumping

to an adjacent level in the two quaternary transmissions. Uniform level, pacing of the quaternary signal is assumed so that a single number characterizes level transitions. We have neglected the probabilities of other types of error occurring in quaternary transmission. This assumption is valid providing that SNR's are not too low.

In the particular case which we are considering, where each stream has the same average energy, we have

$P_1 = P_2$=Prob. of an error in the Golay encoded bits

$P_3 = P_4$ = Prob of a bit in error for straight binary trans.

$P_{q1} = P_{q2}$

In the following tables are presented, for a variety of ρ_i's, the bit error probability for each of the bits along with its contribution to D_c. For bit pairs (5,6) and (7,8) the number in the probability of error column is the probability that noise causes a jump to an adjacent level.

We see from the tables that at low SNR it is the errors in the most significant bits which contribute most to the channel distortion. We can also see that the Golay encoded bits are somewhat overprotected as compared to the bits in stream 3 and 4 and that an energy transfer from the Golay bits to 3 and 4 would improve the overall performance. Furthermore we see that we could achieve a further improvement in performance at low SNR's by shifting some of the energy in the quaternary streams to streams 3 and 4. However, this would have to be paid for by a sacrifice in performance at high ρ_i where the errors made in the quaternary streams dominate the performance. We can see that once a particular scheme has been evaluated the course one must take in achieving a more desirable characteristic becomes clearer.

Table 1

Elements of a Performance Calculation

	ρ_i = 13 dB	E/N_o = 10 dB	E_p/N_o = 1 dB
Bit Number	Probability of Error	Distortion Factor	Contribution to D_c
1	10^{-3}	1	10^{-3}
2	10^{-3}	2.5×10^{-1}	2.5×10^{-4}
3	5.6×10^{-2}	6.25×10^{-2}	3.5×10^{-3}
4	5.6×10^{-2}	1.56×10^{-2}	8.75×10^{-4}
5, 6	2.4×10^{-1}	1.43×10^{-3}	3.43×10^{-4}
7, 8	2.4×10^{-1}	9.14×10^{-5}	2.63×10^{-5}

Table 2

Elements of a Performance Calculation

Bit Number	ρ_i = 15 dB Probability of Error	E/N_o = 12 dB Distortion Factor	E_p/N_o = 2.96 dB Contribution to D_c
1	8×10^{-6}	1	8×10^{-6}
2	8×10^{-6}	2.5×10^{-1}	2×10^{-6}
3	2.29×10^{-2}	6.25×10^{-2}	1.43×10^{-3}
4	2.29×10^{-2}	1.56×10^{-3}	3.57×10^{-3}
5, 6	1.86×10^{-1}	1.43×10^{-3}	2.66×10^{-4}
7, 8	1.86×10^{-1}	9.14×10^{-5}	1.7×10^{-5}

Table 3

Elements of a Performance Calculation

	ρ_i = 20 dB	E/N_o = 17 dB	E_p/N_o = 7.96 dB
Bit Number	Probability of Error	Distortion Factor	Contribution to D_c
1	$<<10^{-8}$	1	
2	$<<10^{-8}$	2.5×10^{-1}	
3	1.92×10^{-4}	6.25×10^{-2}	1.2×10^{-5}
4	1.92×10^{-4}	1.56×10^{-2}	3×10^{-6}
5, 6	5.6×10^{-2}	1.43×10^{-3}	8×10^{-5}
7, 8	5.6×10^{-2}	9.14×10^{-5}	5.12×10^{-6}

Table 4

Elements of a Performance Calculation

	ρ_i = 23 dB	E/N_o = 20 dB	E_p/N_o = 11 dB
Bit Number	Probability of Error	Distortion Factor	Contribution to D_c
1	$<<<10^{-8}$	1	
2	$<<<10^{-8}$	2.5×10^{-1}	
3	2.98×10^{-6}	6.25×10^{-2}	1.86×10^{-7}
4	2.98×10^{-6}	1.56×10^{-2}	4.64×10^{-8}
5, 6	1.24×10^{-2}	1.43×10^{-3}	1.78×10^{-5}
7, 8	1.24×10^{-2}	9.14×10^{-5}	1.13×10^{-6}

The performance of the design for $\beta=8$, in terms of ρ_o vs ρ_i is shown in Fig. 3.7. We see that the performance of MSM is uniformly superior to FM over the range of input SNR's of interest. In addition we have that at low inputs SNR's the gain over FM and PCM in output SNR is in excess of 10 dB. Futhermore, we see that there is shifting of the threshold by 4.5 dB over PCM. The price paid for this gain in comparison to PCM is that at high input SNR's PCM performance is superior to MSM. However, the crossover occurs at such a high output SNR that the higher quality of PCM in this region is really not meaningful.

The MSM curve in Fig. 3.7 was derived using the L=8 curve in Fig. 3.6. The difference in performance that occurs when the L=4 curve is used in the calculation is shown in Fig. 3.8. We can see from the figure that the degradation in performance is negligible. This is due to the fact that at the energy levels being used to transmit the Golay bits they are overprotected as we had previously noted. That is, a good part of the error at the low SNR's comes from streams 3 and 4 and the increase in error from the Golay bits is only part of the distortion.

Finally in regard to the $\beta=8$ design we note that while we have pushed the modulation characteristics closer to the R(D) curve by a significant amount, as compared to existing techniques, the curves indicate that there are still important gains to be made. Based on our work to-date, we are convinced that we can achieve further gains in the design of MSM.

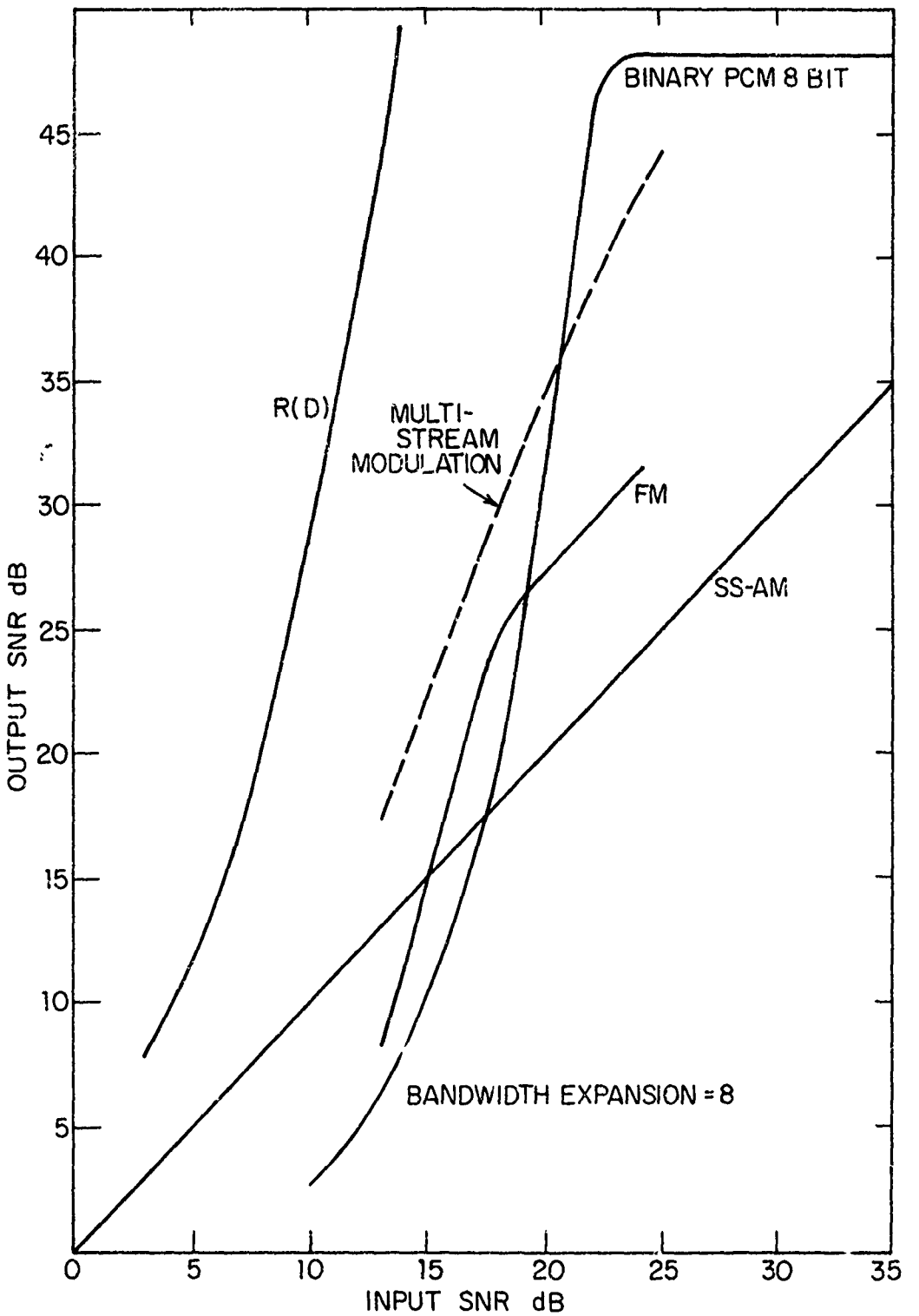

Fig. 3.7 Comparative Performance of a Specific Design of Multi-stream modulation

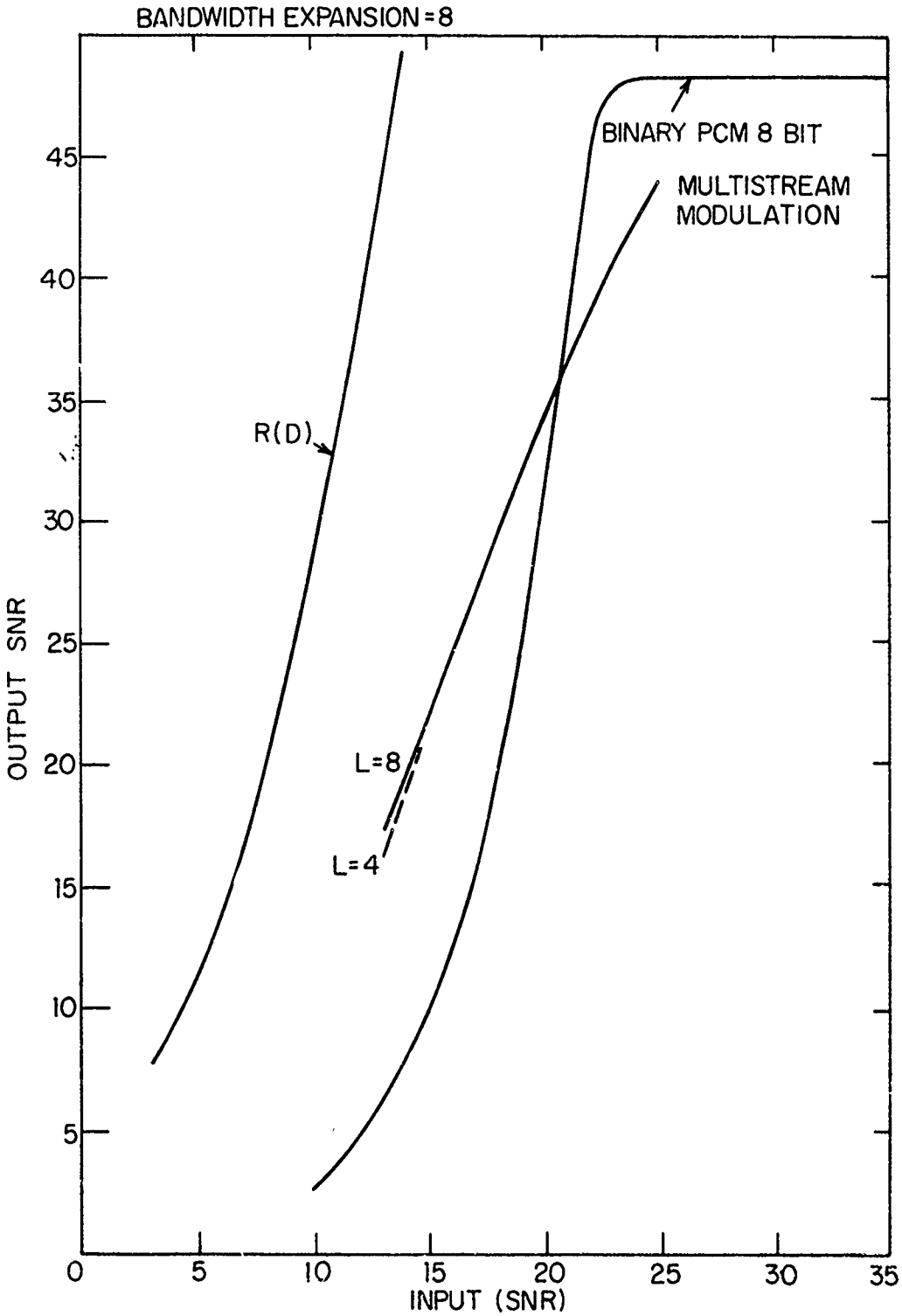

Fig. 3.8 Effect of Quantization in Decoding on MSM

3.4.2 Design for $\beta = 4$

The design methods for $\beta=4$ is the same as for $\beta=8$. The designs for $\beta=4$ were not implemented in the hardware and should be considered as being illustrative and not representing finalized designs.

In the $\beta=4$ case the data source was quantized into six bits. The methods of coding these bits have fallen into two categories: (1) codes with memory and (2) codes with no memory. The no memory codes just make use of an appropriate assignment of bits to channel symbols to provide protection to the bits.

When the various codes with memory were tried, it was found that the overall modulation characteristics which were obtained were not necessarily as desirable as those which could be obtained with no memory coding. The reason for this is that the redundancy introduced to protect the more important bits can readily result in underprotection of the least significant bits. For the case of small β, codes with memory should be useful but it appears that they have to be designed specifically for the application in mind, i.e., it is difficult to select an efficient code for this application from classical ones, such as the Golay.

In the following figure we have illustrated the performance of two MSM designs for $\beta = 4$ that were analyzed. For the sake of comparison an FM curve with $\beta = 4$ has also been compared. The curve labelled A gives the performance for a no memory coding technique. The curve B is for a coding technique which uses memory. While both B and A yield better performance than FM for the range of SNR's considered, we see that B is

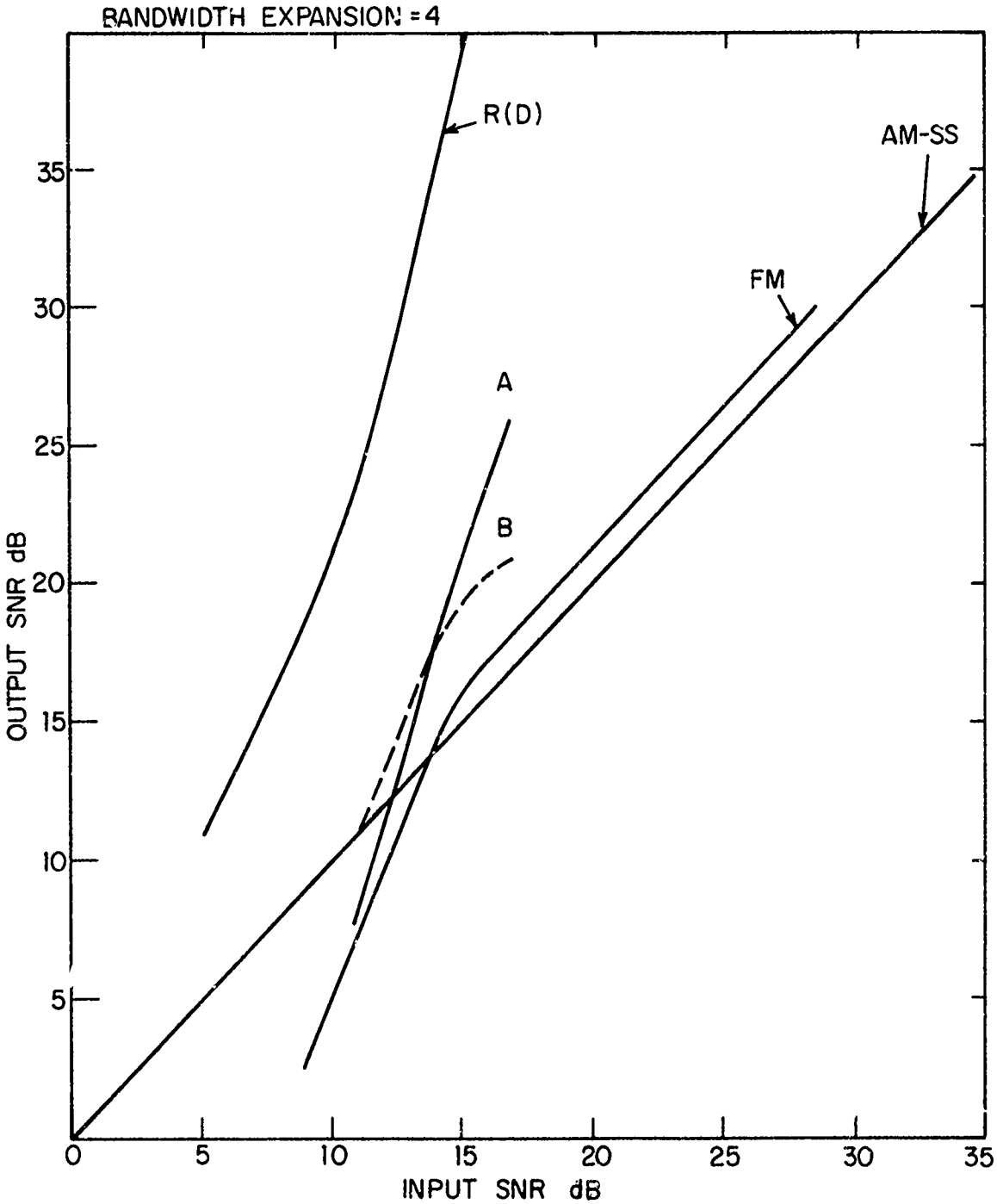

Fig. 3.9 Examples of MSM Designs for $\beta = 4$

better than A at the low end. However, the B curve saturates rather rapidly. This is due to the error probabilities of the lower bits being in a flat region.

The design which yielded the A curve in the accompanying figure has the six bits from the input samples assigned to two binary and two quaternary pulses. The two most significant bits were transmitted binary and the remaining four were quaternary. The quaternary pulses have nonuniformly spaced amplitudes in order to obtain a more desirable bit error assignment. Both the binary and quaternary pulses have the same average energy and the levels of the quaternary take on the values $\pm\ell$ and $\pm 1.6\ell$, where the parameter ℓ adjusts the energy.

The design which gave us curve B used a Golay code on the most significant bit. Thus for each six bits from the A/D seven bits were transmitted over the channel in four transmissions. The seven bits were transmitted by 3 quaternary and one binary transmission. The Golay bits were transmitted by quaternary signals, the second most significant bit was binary and the four remaining bits were quaternary. As in case A the quaternary signals had nonuniform spacing of its levels. Equal average energy was given to each transmission.

SECTION IV

DESCRIPTION OF BREADBOARD EQUIPMENT

4.1 Design of Breadboard Model and Demonstration

The purpose of designing and building a demonstration breadboard is to verify that the theoretical calculations which have indicated that Multistream Modulation will outperform conventional modulation techniques are correct. Thus, this demonstration breadboard will serve to show in a realistic and understandable way just how good and how worthwhile in terms of communication performance the new nonlinear modulation techniques are. In the demonstration breadboard described by us in this section, the demonstration can be run at a bandwidth expansions of 8. The described breadboard design accommodates both a conventional modulation technique (PCM) and the demonstration nonlinear modulation technique. The signal-to-noise ratio can be varied in the demonstration breadboard, and is the basic parameter under the experimenters control.

4.1.1 Format of the Demonstration Experiment

The demonstration experiment is a single voice link. This voice link is provided by either the nonlinear processing equipment* or by a comparison standard PCM modulation system. The structure of the experimental system is shown in Fig. 4.1. Looking at the figure, you see on the left a microphone which feeds a compander, which is a gain control device, which feeds an 8-bit A-to-D. The basic structure, underlying both the conventional PCM system, and the nonlinear system is 8-bit quantized speech.

First, consider how the standard PCM modulation technique is implemented in this experimental structure. The output of

* which embodies the MSM structure of Fig.3.5.

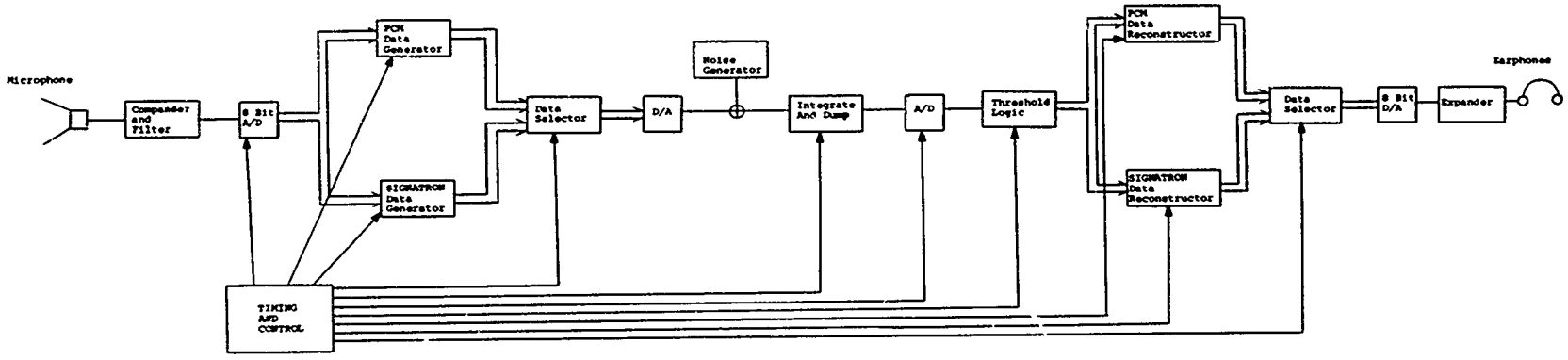

Fig. 4.1 Structure of the Proposed Experimental Breadboard

the A-to-D is fed into the box labelled PCM data generator. The PCM data generator feeds the reformatted data to a data selector. This data selector gates the data from the PCM data generator and directs it to a digital-to-analog converter. The output of the digital-to-analog converter is the baseband simulated channel, which is a PAM channel. Noise, from a noise generator, is added to the channel signal. The sum of noise plus signal is then fed into a detector which is composed of a sampler followed by an A-to-D converter. The output of the A-to-D converter goes to threshold logic which compares the A-to-D result with the thresholds for the channel symbols. The output of the threshold logic, which is the detector's estimate of the symbol that was transmitted over the channel, is then fed to the PCM data reconstructor which takes incoming symbols and reformats them into the binary words representing the digital samples of the voice channel. The output of the PCM reconstructor is gated by the data selector to the D-to-A. The D-to-A output goes through an expander, which reverses the effects of the input compander, and finally after a smoothing filter the signal goes to the earphones. In order for this system to work the signals from the timing and control unit must select the data and gate it properly into the D-to-A. The timing transmitted to the PCM encoders and decoders must correspond to the timing sent to the channel transmission and channel detection logic.

The experimental structure in Fig. 4.1 shows also an alternate data path. This path, rather than using the PCM data encoder, uses the data encoder, and rather than using the PCM data reconstructor, uses the data reconstructor. Now, the data generator takes as input the voice samples from the A-to-D and delivers as output, specifications of the

data symbols to be transmitted over the channel. Computations performed in the data generator effectively calculate the symbols of the nonlinear modulation scheme and report these outputs to the data selector, which then passes them on to the channel. At the output of the channel threshold logic, the received data symbols from the channel are transmitted to the data reconstructor. This data reconstructor looks at the received sequence from the channel and constructs an estimate of the voice data that were actually present at the transmission end. The output of the data reconstructor is fed to the data selector and from there can be gated to the D-to-A and finally to the expander and earphones.

We have not shown in Fig. 4.1 the error measuring circuit. This circuit performs a digital subtraction of the 8-bit output of the input A-to-D from the finally reconstructed 8-bits; that is the digital 8-bit word at point A is subtracted from the digital word at point B. The digital difference is then fed to a converter whose output is fed to an RMS module which contains a squarer, integrator and square router and yields the RMS value of the error as an output voltage.

4.1.2 Structure of the Demonstration Breadboard

The most important feature of the demonstration breadboard is the fact that basic subcomponents including the input compander and filtering, the input A-to-D converter, the output D-to-A converter, the output expander and the channel data transmitter are all the same whether a non-linear modulation scheme is being used, or whether the conventional PCM modulation is being used. The purpose of this great degree of commonality is to reduce the effect of uncontrolled variables so that the experiment will be valid and will compare the features of the non-linear modulation scheme with the features of a standard, well-understood and well-known modulation technique. A second factor in the experimental design structure is that such common use of components results in

reduced experimental expense, while at the same time providing a better experiment. The third point in the experimental structure is the absence of synchronization problems. The timing and control shown in Fig. 4.1 is uniform and comes from a central source for both the transmission and reception sections. This is a part of the true transceiver problem which is not being modelled. However, this is not a defect in the experimental structure, rather it is a simplification. The same effects apply to both the conventional modulation scheme as well as the experimental non-linear modulation scheme so that there is no unequal comparison in the experiment, but rather the effects of the experiment have been localized so that it is truly just signal-to-noise ratio that is important. Secondly, synchronization equipment would be expensive in material costs and in labor-time. Until the performance and design of nonlinear modulation were proven there was no point to add such complications to the experiment although future investigation of system trade-offs must include the synchronization problem.

Because of the considerations mentioned above, the timing and control logic for both the transmitter and receiver in the simulated data link system are unified to simplify the experiment and to save expenses.

PCM was chosen as the conventional modulation scheme to be incorporated in this system for several reasons. First, it is well-known, used extensively on many communication links, and is (as explained in another section of this report) a very good, effective system of bandwidth expansion. It would not be reasonable to compare a new nonlinear modulation technique with anything but a conventional modulation technique which itself is effective. Secondly, PCM allows us to have an easily structured experiment which will generate honest comparisons. The use of PAM on the channel was

selected because it has a simple implementation and can be readily analyzed and simulated during the design phase. Clearly the output from the data selector which selects the channel symbol could just as easily feed into a PSK modulator, or an FSK modulator. There is no particular restriction on channel modulation scheme except that in the laboratory it is very easy to model the PAM channel.

The input signal to the system comes either from a microphone or a tape recorder and is fed into the compander and filter. The filter limits the input to the A-to-D converter to frequencies below 4 KHz. The A-to-D converter is driven at 8 kilosamples per second, which is the Nyquist rate for the output of the filter. These data samples from the A-to-D go to both the PCM data generator and the data generator. These data generators prepare specifications of channel symbols from the input data words and transmit these specifications to the data selector. The data selector is controlled by the timing and control logic, and depending upon whether we are running in the PCM mode or the non-linear modulation load, selects the data from the PCM data generator, or selects the data from the data generator, and feeds this data (really, at this time a channel symbol specification) to the D-to-A converter where a channel symbol is created. One special feature of our design is that this D-to-A converter has a higher bit capacity than the symbols on which it operates in order to provide variable energy assignment to different bits.

The channel symbol is put on a simulated channel, noise is added to it, and it is fed to a sampler. The output of this sampler goes to an A-to-D converter which produces a digitized result. The digital result goes to a threshold logic box which compares the received channel level with the thresholds associated

with various channel symbols, and produces an estimate of the received channel symbol. This estimate is then fed into the PCM data reconstructor and the data reconstructor. These data reconstructors take as input the streams of received channel symbols and produce as output estimates of the digital words that were input to the data generators. The output of the data reconstructors is fed to a data selector which chooses the proper output depending upon the mode the breadboard is in. The output word is fed to a D-to-A converter which reconstructs an analog signal. This analog signal is then fed to an expander and then to the earphones.

Bandwidth expansion is defined by the mapping that the data generators create between their input symbols and their output symbols. For instance, if the PCM that is used is a straight 8-bit PCM, then for every digital sample, or 8-bit A-to-D output of the PCM, eight single pulses will be delivered to the data selector and eight single pulses will be transmitted over the channel. Thus a bandwidth expansion of eight is achieved. At the receiving end, for every eight pulses that are decoded by the threshold logic and fed to the PCM data reconstructor, one word of data will come out of the data reconstructor.

The detection logic is composed of a sampler followed by an A-to-D, followed by a digital thresholding operation. The purpose of using the digital thresholding operation together with an A-to-D converter was to simplify the variability of the threshold logic and to allow a variety of symbol detection options depending upon what encoding technique is being used at the output of the data generator.

The function of the data reconstruction has been mentioned several times before. Essentially the data reconstructors

translate from the received channel symbols back to the digitized voice samples. For instance, if the system is operating as straight PCM, then the PCM reconstructor takes in eight serial bits and produces as output an eight-bit sample which is then transmitted into the data selector. The data selector would transmit it on to the D-to-A converter if the breadboard were operating in the PCM mode. The function of the other components in the system, the data selector, the D-to-A and the expander have all been discussed above.

The timing and control box generates those clock and command signals necessary to make each of the described units function as desired. For many of the units, the timing and control is quite simple. For instance, for the A-to-D and D-to-A, these control signals are essentially pulses at the sampling rate. For some of the other equipment, the control is somewhat more complicated.

We have thus far presented the overall structure and concept of the breadboard design. In the following section we have presented a more detailed function description of the breadboard design.

4.2 Functional Description of Multistream Modulation Breadboard

4.2.1 Transmitter Description

Two modes of operation are available: A straight PCM and MULTISTREAM Modulation which will be designated as MSM. The data source can be either voice or a random signal which will be designated PRN (Pseudo Random Noise). The message unit is 8-bits of information(i.e., voice sample quantized into 8-bits).

For the PCM mode the transmission levels are a fixed analog level for a 1 and an opposite signed level of equal magnitude for a 0. For MSM bits 1 to 4 are transmitted in the same manner (including the Golay code check bits). For bit pairs (5,6) and (7,8) a four level analog signal (2 positive and 2 equal magnitute but negative values) is transmitted.

4.2.1.1 PCM Operation (Refer to Fig. 4-2)

The 8 bit message units are sent serially out via the 4 bit level selector and the output D-to-A. The 4 bit level selector selects the proper positive or negative 4 bit digital number (to be converted tc analog positive or negative levels), corresponding to the 1's or 0's in the message.

4.2.1.2 MSM Operation (Refer to Fig. 4-2)

The eight bit message is broken into the following parts: bits 1 and 2 (most significant bits) are sent to a Golay Encoder. Bits 3 and 4 are transmitted unmodified. Bits 5 and 6 are combined and the four different combinations resulting from these two bits (i.e.,00,01,10,11) are transmitted by four analog levels. Bits 7 and 8 are processed like bits 5 and 6.

The Golay code is a 23 bit code, the first twelve bits of which are the data followed by eleven check bits generated by the coder. Since only the first and second most significant bits of the message unit are to be encoded it takes six such messages in order to accumulate twelve data bits to fill the code.

Bits 3 and 4 of these six messages are meanwhile assembled into six-bit accumulators. Bits 5,6,7, and 8 are processed in the same manner. At the end of six such eight bit message units, the contents of the Golay encoder and the six above mentioned accumulators

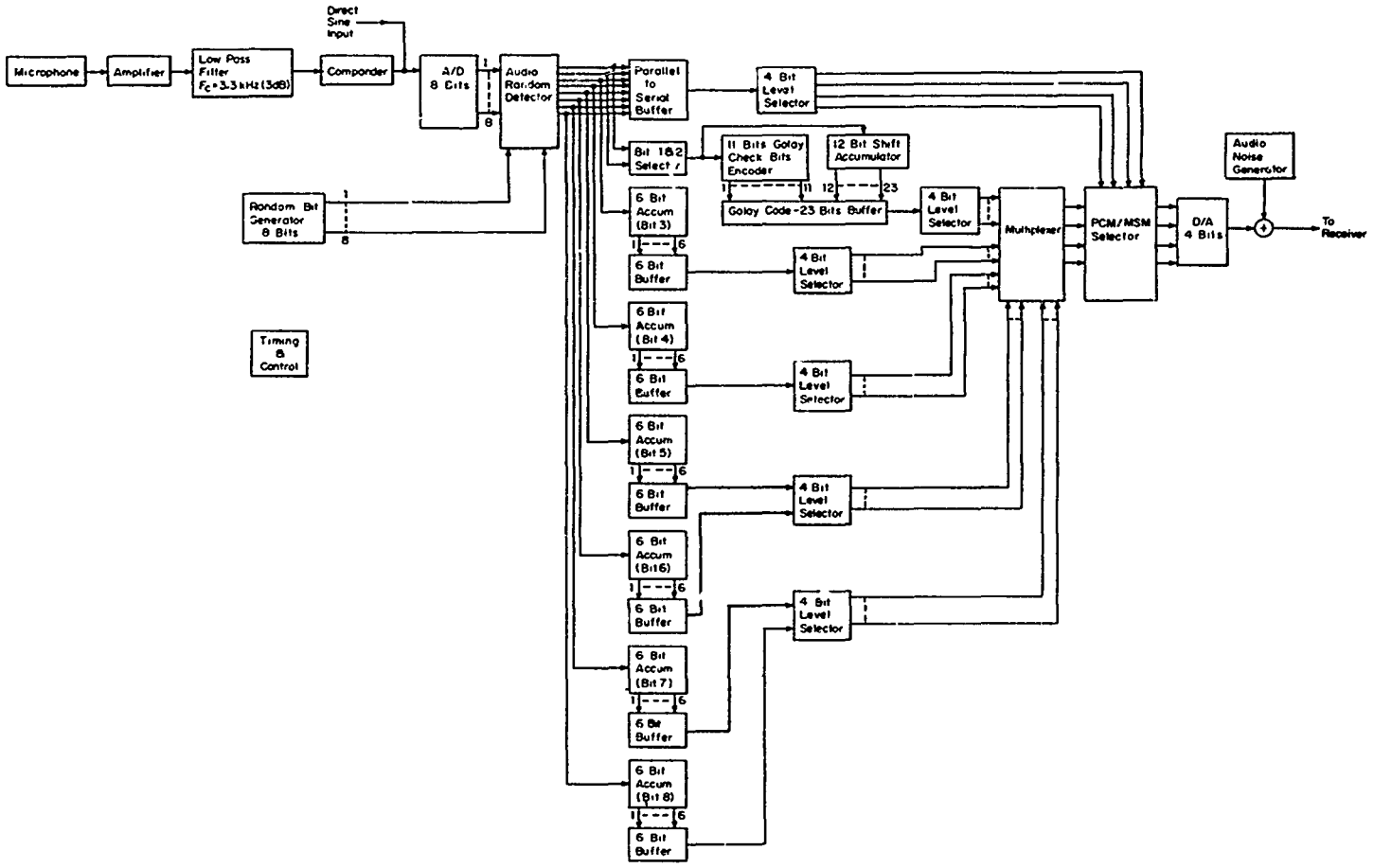

Fig. 4.2 Functional Block Diagram of Transmitter

are transferred to buffers and the cycle repeats. Meanwhile the data stored in these buffers are transmitted serially starting with the 23 Golay information followed by the six bits of bit stream number 3 etc.

The levels chosen for transmission are determined by the four bit level selectors shown in the block diagrams. These selectors convert a 1 or 0 level into a four bit digital number which serves as the input to the output D-to-A. The only exceptions are the four level selectors for bit numbers 5,6,7, and 8. In these selectors the conversion is from two input bits to a four bit output number. Thus the twelve bits in the bit number 5 and 6 buffers are combined to form six output bits which as mentioned above are transmitted as a four level signal (this will be designated from here on as a Multi Level Signal). The same process occurs in bits 7 and 8.

The transmitter is so designed that these level selectors are easily changeable (by means of wire jumping) so as to facilitate experimentation with different transmission power level assignments. The voltage range of the D-to-A output is about $\pm$ 4.5 volts and the level selector allow choosing eight positive and eight negative binary levels within this range. The D-to-A is of the 1's complement type.

The system samples the input wave form at a rate of 8 KHz. Since there are 8 bits per sample the output information rate is 8 x 8 = 64 KHz. The microphone input is amplified and is limited to 3.3 KHz 3dB bandwidth by the 6 pole low pass Butterworth filter. Therefore the sampling rate satisfies the Nyquist criterion. The filter output is then processed by a compander which amplifies low level signals more than higher level signals

which is a common practice in audio transmission systems. (In the receiver section the processed signal is expanded back to the original waveform). Means are also available to input an audio sine wave (9 Volts peak-to-peak) to the A-to-D thus by-passing the voice input circuitry. When operating in the random bit mode the input is taken from random bit generator (PRN) and the 8 bit samples are given directly in digital form by passing the input A-to-D.

Finally noise is added algebraically to the analog transmitted value from an audio random generator. The combined signal is then sent to the processing in the receiver.

4.2.2 Receiver Description

The receiver operates in two modes: PCM and MSM as described in the Transmitter section. The noisy input signal is processed and compared to the original undisturbed signal. When the signal is a random bit stream the difference between the signals is measured by an RMS instrument and indicates quantitatively the performance of the different modes of operation (i.e., MSM vs.PCM). An audio amplifier for driving earphones is supplied for listening to voice.

An interesting feature of the Golay decoder incorporated in the receiver is that it utilizes soft decision of the received noisy code bits to improve code performance. We use the algorithm given by Weldon, which increase theoretically the Golay decoder capability to correct bits. This scheme (Weldon algorithm) creates a 3 bit digital number out of every noisy Golay bit received to create three 23 bit registers. The Golay decoder decodes separately each one of these three 23 bit registers to give three 12 bits registers of decoded data. The Weldon algorithm generates the final 12 data bits from the content of these three registers.

4.2.2.1 PCM Operation (Refer to Fig. 4.3)

The PCM mode is straightforward. Since no coding is involved the input A-to-D MSB (Most Significant Bit) line serves as the input to an eight bit accumulator that assembles an eight bit message. When eight bits have been assembled they are transferred to a buffer, the output of which is fed to the voice D-to-A via the PCM/MSM selector.

Each 8 bit message unit processed by the receiver is compared to the original 8 bit message which is sent directly from the transmitter as a binary pulse stream over a noiseless link. This comparison is done in the Coincidence Detector which is an eight bit arithemetic subtractor. Eight bits of the original data are assembled serially and are subtracted from the eight bit message unit just processed by the receiver. The difference quantity is converted to an analog value and sent to the RMS module. The RMS module output is a DC voltage equal to the RMS value of the error signal. Note: Because of the characteristics of the RMS module the meter required for error measurements can be a simple DC meter. If the meter reading is zero it means that the received processed signal is identical to the original signal (this of course is the case when no noise is added to signal path between the transmitter and the receiver. The SNR meter serves to measure and thus compares the PCM and MSM performance. In the above two modes the test can be performed on data which is generated either by a sine wave or random bit generator.

In the present embodiment of the receiver the timing and synchronizing pulses are derived from those of the transmitter by means of direct wires connecting the two. A possible future version could be incorporating a sync bit in the transmission cycle by stuffing a sync bit into the Golay codeword. The Golay code take 12 bits into 23 bits. We can make it 24 bits by making the 24th bit a sync bit.

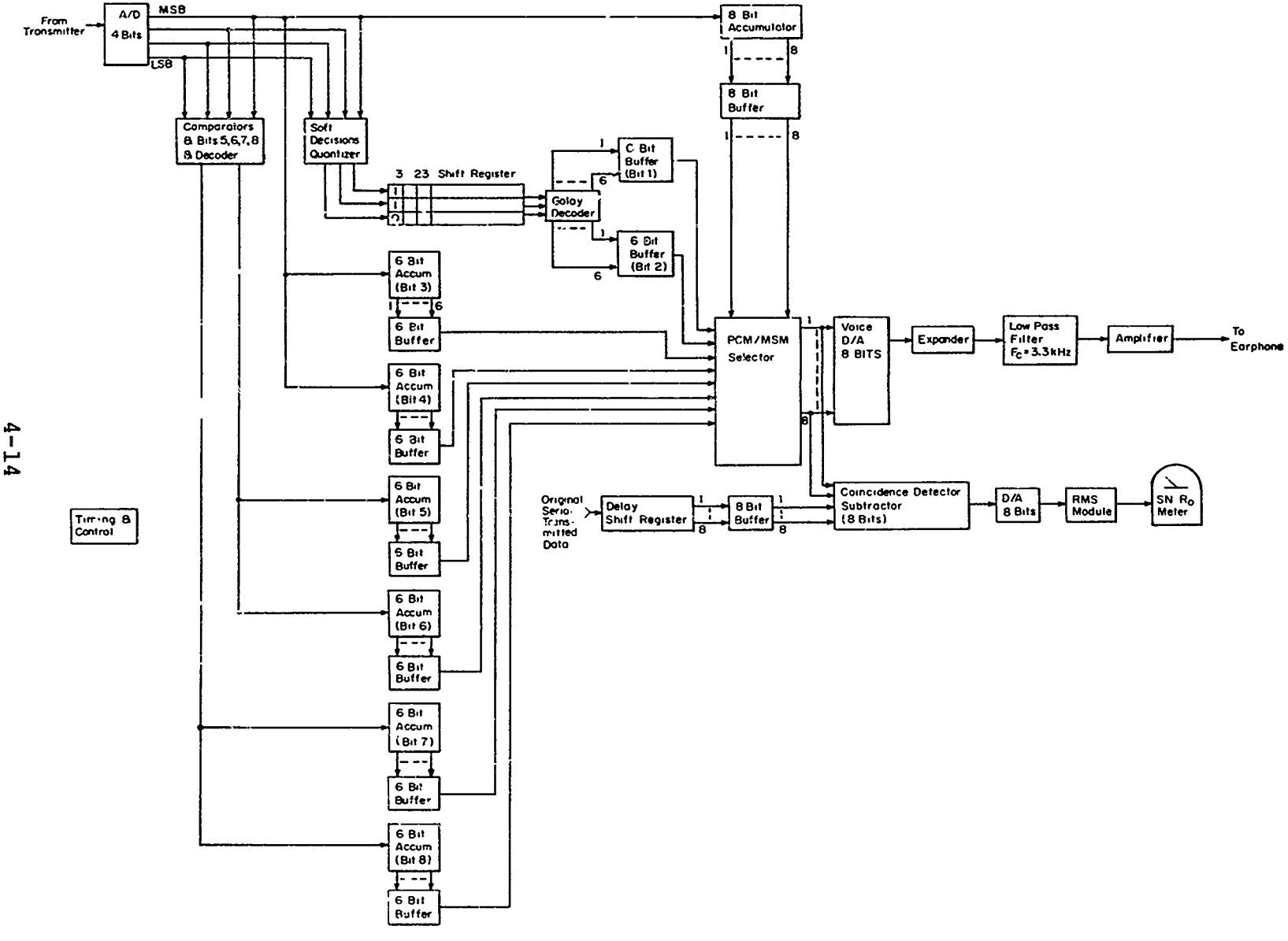

Fig. 4.3 Functional Block Diagram of Receiver

4.2.2.2 MSM Operation (Refer to Fig. 4.3)

The input signal is quantized in the input A-to-D into 2 four bit binary offset number. Every transmission cycle contains 47 bits, the first 23 of which are the Golay code bits.

A soft decision quantizer divides the 16 possible states of the 4 bit input number into 8 regions designated 000 to 111. This 3 bit number is stroked into the input of 3 shift registers, 23 bit long each. In the block diagram 110 number is shown as an example. This is the soft decision representation of the received 23 bit Golay code word. The above mentioned 8 regions are alterable so that the effect of different tests can be conducted. Thus the 8 regions represented by the 3 bit number are not necessarily equal and therefore the 8 states (i.e., -000 to 111) merely represent a region and not a numerical magnitude.

Bits 3 and 4 (referring to the transmitter eight bit unit message) of the transmission that occupy the next twelve bits in the 47 bit transmission cycle and are shifted serially into two six bit accumulators. Since bits 3 and 4 are not encoded in any manner in the transmitter there should be a one to one relationship between a transmitted bit and a bit stroked into these accumulators. For this reason it is the MSB bit of the receiver output A-to-D which serves as the input data line to these accumulators. (With the absence of noise the MSB state will be exactly the transmitted data).

The multi-level transmission of bit 5, 6, 7 and 8 (the next 12 bits of the 47 bit cycle) is decoded back via the comparators and bits 5, 6, 7, and 8 decoded and stroked into four six-bit accumulators that contain bit 5, 6, 7, and 8 chains respectively.

At the end of a 47 bit transmission cycle the contents of all these accumulators are transferred to six 6 bit buffers. However

the contents of the 3 x 23 registers containing the soft decision Golay bits are transferred to the Golay decoder right after they have been filled out. A new cycle repeats the above steps.

The time allotted for the decoding is the time of bits 13 through 47 of the transmission cycle. While the decoder ouput is read out, the contents of all the accumulators are transferred to the two 6 bit buffers that contain now the original bit 1 and 2 of six consecutive message units.

The result of all this is to have eight six bit buffers containing 48 bits of the six consecutive eight bit message units. To retrieve these six 8 bit samples, the first bit in line from each of these eight Register-Buffers is taken, in the appropriate order, and fed into D-to-A thus reconstructing the original waveform. The rest of the five groups in the buffers are shifted out and processed in the same way. The D-to-A conversions occur at a rate of 8 KHz which is the transmitted sampling rate. The D-to-A output is expanded (reversing the transmitter companding process) filtered and amplified so that the output can be listened to.

Golay Decoder Description

The Golay decoder, as we have preciously noted follows the algorithm of T-Kasami [12] along with soft decision technique of Weldon [13].

4.3 Instructions for Making Signal-to-Noise Measurements with Multistream Modulator

4.3.1 Introduction

In order to evaluate performance of the multistream modulator and also the PCM system, there are two basic signal-to-noise measurements which must be made. One is the ratio of the average

signal power to the average error power and the second is the ratio of the average transmitted power to the average channel noise power in the bandwidth of the modulating signal. The latter signal-to-noise ratio we designate as ρ_i or the input signal-to-noise ratio. The former we designate as ρ_o the output signal-to-noise ratio.

4.3.2 Measurement of ρ_i Input Signal-to-Noise Ratio

The first step in the measurement of ρ_i is the measurement of the received signal power. For this measurement we have

a. The noise input switch in the off position,

b. The performance measurement switch at the receiver input position,

c. A voltmeter is connected to the rms level connector.

The square of this rms voltage reading is proportional to the average transmitted power. This reading will remain the same with the modulation switches in the MSM or the PCM position.

The next step of the measurement procedure for ρ_i is the measurement of the noise power entering the receiver. In order to carry out this measurement, the following steps have to be taken.

a. The signal cable carrying the signal from the transmitter to the receiver must be disconnected.

b. The noise input switch should be put in the ON position.

c. The performance measurements switch remains at the receiver input position.

The voltmeter reading will now give the rms value of the noise entering the receiver. Let σ_s denote the rms signal voltage and σ_n denote the rms noise voltage. In terms of these two

quantities the input signal-to-noise ratio is given by the equation

$$\rho_i = \frac{8\sigma_s^2}{\sigma_n^2}$$

this equation follows from the fact that we can write

$$\rho_i = \frac{2E_s}{N_o}$$

we have from our measurements that $E_s - \sigma_s^2$ and that

$$\frac{N_o}{2} = \sigma_n^2.$$

4.3.3 Measuring the Output Signal-to-Noise Ratio ρ_o

Computation of ρ_o involves knowing the average power of the signal process x (t) and the average power of the error which we will denote by e (t). For the purpose of our measurements we consider only the input consisting of uniformly distributed random samples occurring at an 8 KHz rate. These samples are generated internally in the transmitter. They are uniformily distributed from -5 to +5 volts. The average power of the signal process we are considering is proportional to the variance of these samples. The variance of these samples is given by equation

$$\sigma_x^2 = \frac{100}{12} = 8.33$$

The second quantity which we need for our calculation ρ_o is equal to the variance of the error in the reconstruction of these samples. This variance quantity is obtained in the following manner.

a. Signal output of the transmitter is connected to the signal input terminal on the receiver.

b. The noise generator is connected to the noise generator input and the noise which is turned on.

c. The performance switch is turned to the position saying "error signal".

d. The input switch is put on random.

The rms voltage which is now read from the meter which we shall call σ_e is the rms error in reconstructing the transmitted samples. The output signal-to-noise ratio in dB is given by the equation

$$\rho_o = 20 \log \frac{\sigma_x}{\sigma_e}$$

A photograph of the breadboard of a MSM modem is shown in Fig. 4.5.

4.4 Experimental Results

The following figures show the results of the measurements made in accordance with the procedures described in the preceding section. The results of the measurements show a high [illegible] of agreement with the theoretical predictions. The vol measurements were made with a Simpson VOM, Model 260, Series [illegible].

In the MSM experimental results the major sources of error are: meter accuracy; the overly optimistic performance predictions of the Weldon curves; the suboptimality of soft decision levels. Due to the closeness of the measured data with the theoretical curves it is difficult to pinpoint which source of error was responsible for the small discrepancy.

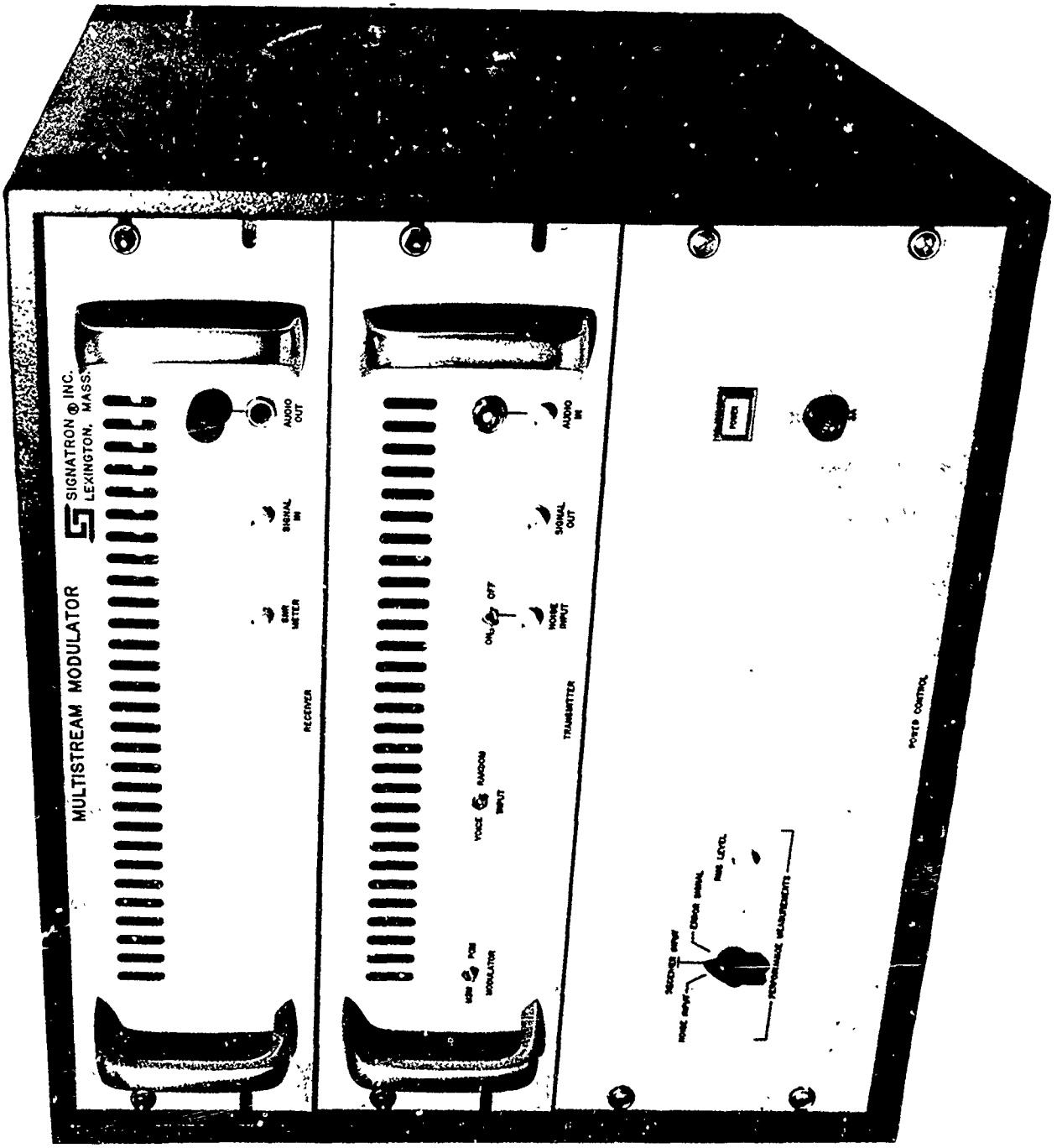

Fig. 4.5 Breadboard Equipment.

Reproduced from best available copy.

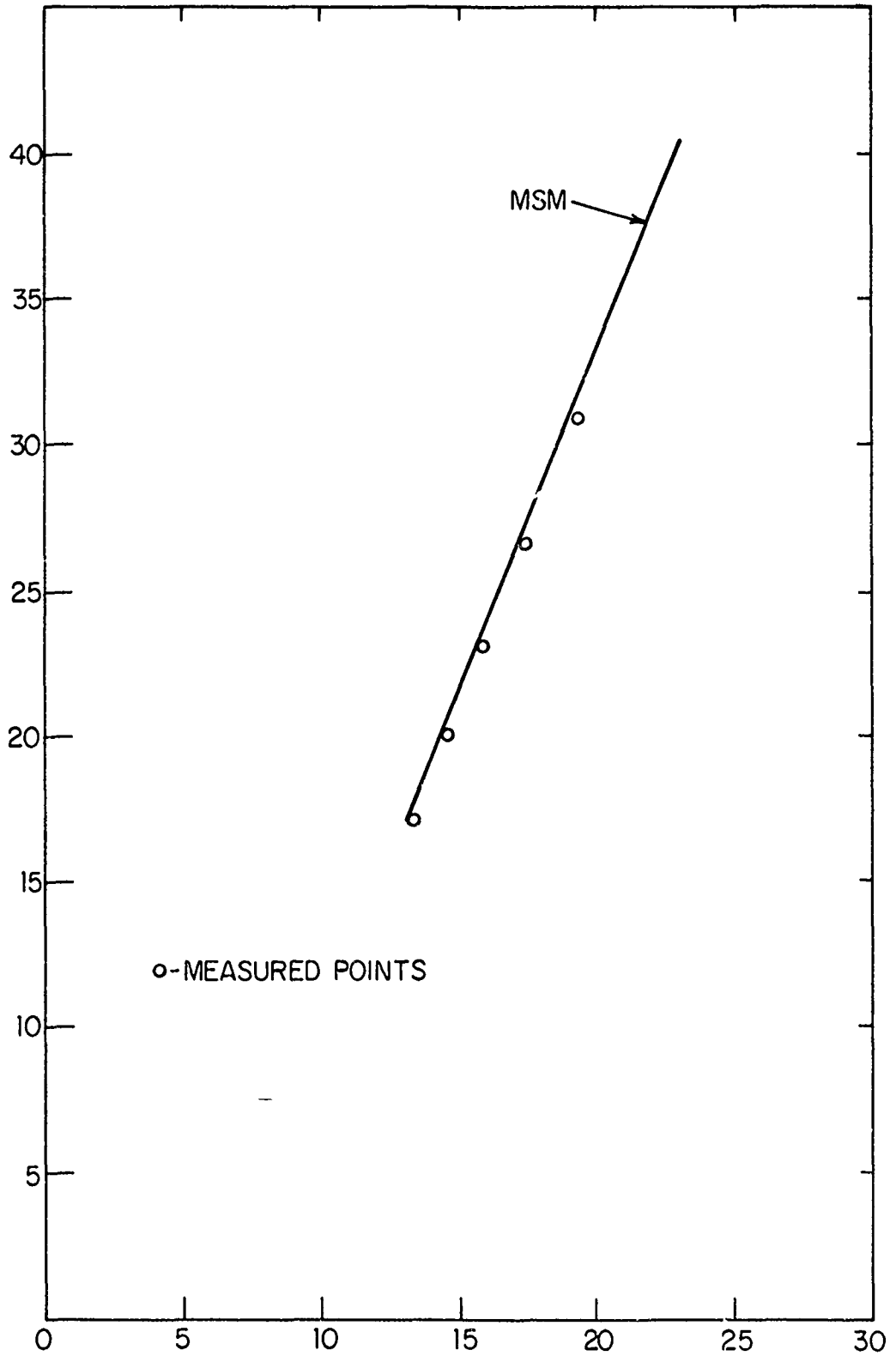

Fig. 4.6 Theoretical Performance of MSM and Measured Performance

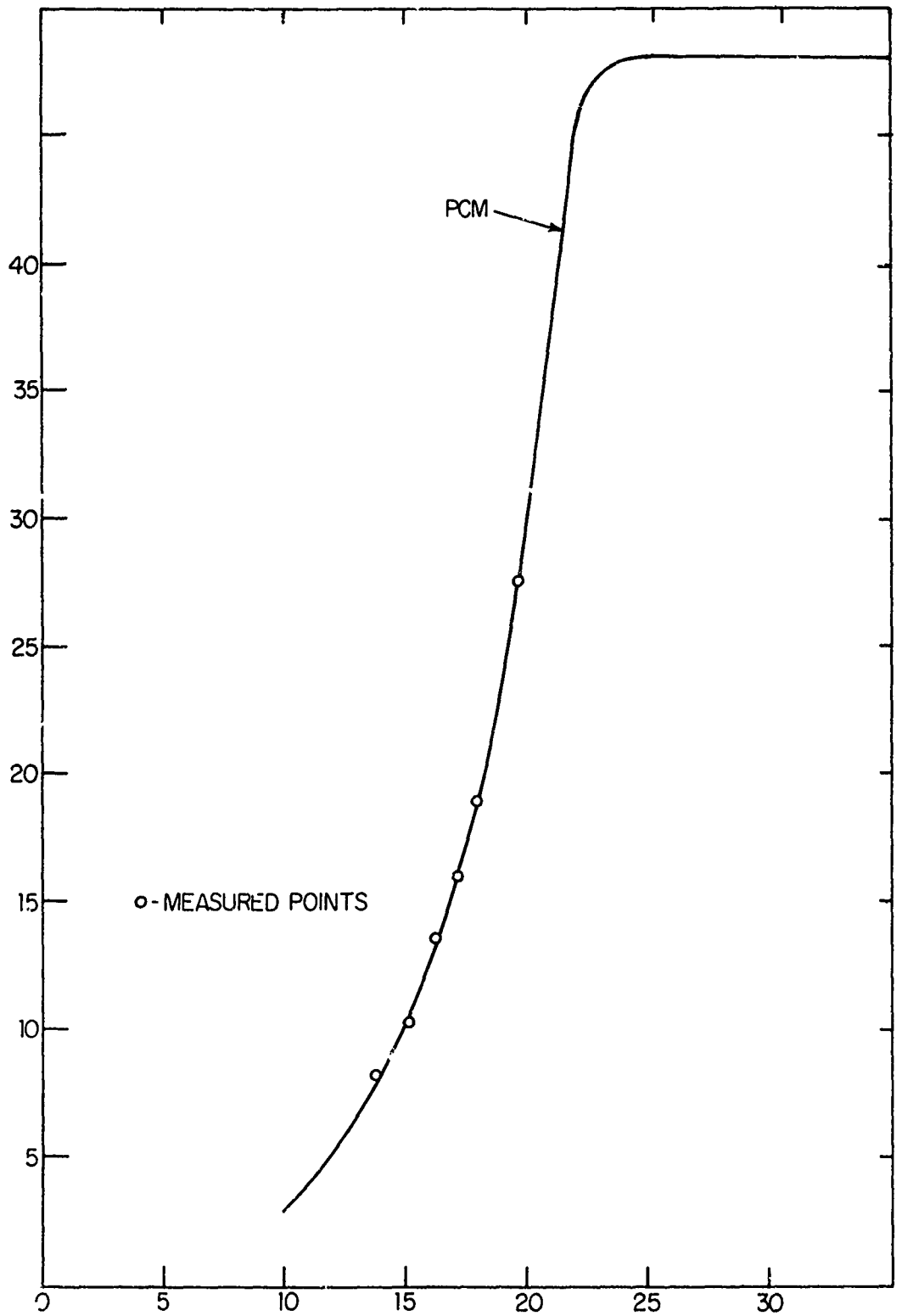

Fig. 4.7 Theoretical Performance of PCM and Measured Performance

In the PCM experiment the major source of error is meter accuracy. Again, experimental results confirm the theoretical predictions.

SECTION V

SUMMARY AND CONCLUSIONS

In this report we have demonstrated that there is much to be gained in the development of new nonlinear modulation techniques. The particular approach we have taken, which we have called Multistream Modulation (MSM) has shown itself to be a particularly useful and flexible technique.

Based upon the MSM approach we arrived at a design to be implemented which has a desirable performance characteristic at low signal-to-noise ratios, providing a 4.5 dB improvement in threshold performance over conventional PCM.

The MSM design was implemented together with a conventional PCM design on a single chassis using many parts in common. The resulting piece of equipment was essentially a prototype of a digital transceiver for implementing digital modulation techniques for analog data.

The incorporation of the PCM together with the MSM on a single chassis simplified many problems in the performing of experiments. The most notable advantage was the ability to switch from PCM to MSM instantaneously, while using a voice input. This permitted immediate side-by-side comparisons. As indicated in Section 4, the experimental results agreed quite well with predictions. The improvement exemplified by measurements was also true for voice as was indicated by the informal voice tests which were carried out.

An important result of this research effort lies in our uncovering a new direction which offers the potential for real gains in the performance of communication systems. Among the many

possible areas in which this research effort may be continued are:

(1) development of techniques for the systematic design of desired performance characteristics;

(2) development of specific modulator designs for different channels, different bandwidth expansions and different performance characteristics;

(3) the design of codes which account for channel characteristics and transmission waveforms;

(4) design of coding networks which operate efficiently on input bits of different significance.

83

END 3/2/73