AD-755 934

THERMODYNAMIC, ELECTROCHEMICAL AND SYNTHETIC STUDIES OF THE GRAPHITE-FLUORINE COMPOUNDS CF AND C_4F

James L. Wood, et al

Rice University

Prepared for:

Army Electronics Command

December 1972

DISTRIBUTED BY:

NTIS

National Technical Information Service
U. S. DEPARTMENT OF COMMERCE
5285 Port Royal Road, Springfield Va. 22151

AD

AD755934

RESEARCH AND DEVELOPMENT TECHNICAL REPORT

ECOM-0105-F

THERMODYNAMIC, ELECTROCHEMICAL AND SYNTHETIC STUDIES OF THE GRAPHITE-FLUORINE COMPOUNDS CF AND C_4F

FINAL REPORT

By

J. L. Wood, A. J. Valerga,
R. B. Badachhape, and J. L. Margrave

DECEMBER 1972

DISTRIBUTION STATEMENT:
Approved for public release;
distribution unlimited

Reproduced by
NATIONAL TECHNICAL
INFORMATION SERVICE
U S Department of Commerce
Springfield VA 22151

ECOM

UNITED STATES ARMY ELECTRONICS COMMAND · FORT MONMOUTH, N.J.

CONTRACT DAAB07-72-C-0105
Rice University
Houston, Texas 77001

DDC
FEB 13 1973
B

37

NOTICES

Disclaimers

The findings in this report are not to be construed as an official Department of the Army position, unless so designated by other authorized documents.

The citation of trade names and names of manufacturers in this report is not to be construed as official Government indorsement or approval of commercial products or services referenced herein.

Disposition

Destroy this report when it is no longer needed. Do not return it to the originator.

ACCESSION for
NTIS White Section
DDC Buff Section
UNANNOUNCED
JUSTIFICATION
BY
DISTRIBUTION/AVAILABILITY CODES
Dist. AVAIL. and/or SPECIAL
A

TR ECOM-0105-F
DECEMBER 1972

Reports Control Symbol
OSD-1366

THERMODYNAMIC, ELECTROCHEMICAL AND SYNTHETIC STUDIES OF THE GRAPHITE-FLUORINE COMPOUNDS CF AND C_4F

FINAL REPORT

CONTRACT NO. DAAB07-72-C-0105

DA Project No. C8-2-04132-01-C8-CA

DISTRIBUTION STATEMENT:
Approved for public release;
distribution unlimited

Prepared by

J. L. Wood, A. J. Valerga,
R. P. Badachhape, and J. L. Margrave

Rice University
Houston, Texas

For

U. S. ARMY ELECTRONICS COMMAND, FORT MONMOUTH, N. J.

I-C

UNCLASSIFIED
Security Classification

DOCUMENT CONTROL DATA - R & D

(Security classification of title, body of abstract and indexing annotation must be entered when the overall report is classified)

1. ORIGINATING ACTIVITY (Corporate author) Rice University Houston, Texas 77001	2a. REPORT SECURITY CLASSIFICATION UNCLASSIFIED 2b. GROUP

3. REPORT TITLE
Thermodynamic, Electrochemical and Synthetic Studies of the Graphite-Fluorine Compounds CF and C_4F

4. DESCRIPTIVE NOTES (Type of report and inclusive dates)
Final Report - November 17, 1972

5. AUTHOR(S) (First name, middle initial, last name)
James L. Wood, Antone J. Valerga, Ram B. Badachhape, John L. Margrave

6. REPORT DATE December, 1972	7a. TOTAL NO. OF PAGES ~~30~~ 37	7b. NO. OF REFS 20
8a. CONTRACT OR GRANT NO DAAB07-72-C-0105 b. PROJECT NO C8-2-04132-01-C8-CA c. d	9a. ORIGINATOR'S REPORT NUMBER(S) 4160031 9b. OTHER REPORT NO(S) (Any other numbers that may be assigned this report) ECOM-0105-F	

10. DISTRIBUTION STATEMENT
Approved for public release; distribution unlimited

11. SUPPLEMENTARY NOTES Details of illustrations in this document may be better studied on microfiche.	12. SPONSORING MILITARY ACTIVITY US Army Electronics Command Attn: AMSEL-TL-PR Fort Monmouth, New Jersey 07703

13. ABSTRACT

Samples of the solid fluorocarbons CF and C_4F have been prepared by direct fluorination of pure graphite. Low temperature heat capacity measurements have been made on both of these samples using a hydrogen cryostat calorimeter. For the compound $CF_{1.09}$, c_p has been measured over the temperature range 5-310 K. Values of S° and G° have been calculated over this range of temperature also. Using a previously determined value of $\Delta H^\circ_{f\ 298}$ ($CF_{1.12}$, s) it is possible to calculate the theoretical E° for an electrochemical cell utilizing the overall reaction

$$CF_{1.12}(s) + 1.12\ Li\ (s) \rightarrow 1.12\ LiF(s) + C\ (s)$$

The value of $\Delta H^\circ_{f\ 298}$ ($CF_{0.2369}$) has been derived from the energy of combustion in fluorine for the sample of C_4F. In addition, low temperature (15-57 K) c_p data have been gathered for this compound. Extending the c_p measurements to 300K will allow the calculation of a value of E° for the electrochemical process

$$CF_{0.2369}(s) + 0.2369\ Li\ (s) \rightarrow 0.2369\ LiF\ (s) + C\ (s)$$

DD FORM 1 NOV 65 1473 REPLACES DD FORM 1473, 1 JAN 64, WHICH IS OBSOLETE FOR ARMY USE.

I-a

UNCLASSIFIED
Security Classification

UNCLASSIFIED

Security Classification

14. KEY WORDS	LINK A ROLE	LINK A WT	LINK B ROLE	LINK B WT	LINK C ROLE	LINK C WT
Graphite-Fluorine Compounds						
Fluorocarbons						
Polycarbonmonofluoride						
Tetracarbon monofluoride						
Heat Capacities						
Heat of Formation						
Free Energy of Reaction						
Electromotive Force						

I-f

UNCLASSIFIED

Security Classification

CONTENTS

	Page
INTRODUCTION	1
Part I. PREPARATION OF SAMPLES	2
1. Preparation of Carbonmonofluoride, $CF_{1.09}$(CF)	2
2. Preparation of the Solid Fluorocarbon, $CF_{0.2369}$(C_4F)	3
a. High pressure method	3
b. Flow method	4
Part II. LOW TEMPERATURE CALORIMETRY OF THE SOLID FLUOROCARBONS, $CF_{1.09}$ (CF) AND $CF_{0.2369}$ (C_4F)	4
1. Apparatus	4
a. Cryostat	4
b. Sample container	5
c. Thermometer and temperature scale	5
d. Measurements	6
2. The Fluorocarbon $CF_{1.09}$ (CF)	6
a. Sample	6
b. Heat capacity and thermodynamic functions	6
3. The Fluorocarbon $CF_{0.2369}$ (C_4F)	8
a. Sample	8
b. Heat capacity	9
Part III. FLUORINE COMBUSTION CALORIMETRY OF $CF_{0.2369}$ (C_4F)	9
1. Experimental Apparatus	9
a. Fluorine system	9
b. Combustion bomb	15
c. Calorimeter	15
d. Thermometer	15
2. Combustion Techniques that Failed	17
3. The Successful Combustion Technique	17
4. Results of Combustion Runs	20
CONCLUSIONS AND RECOMMENDATIONS	20
1. Future Samples	20
2. Discussion of Heat Capacity Data	20
3. Calculation of Gibbs Free Energy for Cell Reaction	23
4. C_4F Data	25

Preceding page blank

CONTENTS

		Page
LITERATURE CITED		29

FIGURES

1.	Diagram of the bomb head and sample isolation chamber	16

TABLES

I.	Elemental Analysis of CF	7
II.	The Heat Capacity of CF	10
III.	The Thermodynamic Functions of CF at Rounded Temperatures	11
IV.	The Heat Capacity of C_4F	13
V.	The Heat Capacity and Entropy of C_4F at Rounded Temperatures	14
VI.	Erroneous $\Delta E/M$ Values of C_4F	18
VII.	Auxiliary Data (25 °C)	21
VIII.	Summary of Combustion Data on C_4F in Fluorine at 298.16 K	22
IX.	Relative Heat Capacities of Graphite, CF, and C_4F	24
X.	Changes in Certain Thermodynamic Quantities of CF_n for Various Values of n	27
XI.	Derived Data for C_4F at 298.16 K	28

INTRODUCTION

The purpose of the research reported herein has been to prepare pure samples of the solid fluorocarbons CF and C_4F and to measure their thermodynamic properties, C_p vs. temperature and $\Delta H^\circ_{c\ 298.16}$ with sufficient accuracy to allow the calculation of ΔG° for their reaction with lithium in an electrochemical cell. These reactions can be written as the idealized processes:

$$CF(s) + Li(s) \longrightarrow LiF(s) + C(\text{graphite})$$

and,

$$C_4F(s) + Li(s) \longrightarrow LiF(s) + 4\ C(\text{graphite})$$

In the discussion that follows, the CF compound was found by chemical analysis to be $CF_{1.09}$, while the C_4F compound was found to be $CF_{0.2369}$. The derived thermodynamic quantities S°, G°, and $\Delta H^\circ_{f\ 298.16}$ were based on these stoichiometries.

The description of the experimental work and the results has been divided into three parts. Part I describes the preparation and purification of the samples used. Part II describes the low temperature heat capacity measurements. Part III describes the fluorine bomb calorimetry methods used to arrive at the enthalpy of formation of C_4F.

Part I. PREPARATION OF SAMPLES

1. Preparation of Carbonmonofluoride, $CF_{1.09}$ (CF).

Spectroscopic grade graphite powder (Carbon Products Division, Union Carbide Corporation) (-325 mesh) was uniformily spread on prefluorinated nickel trays which were placed in a 3 inch i.d. nickel reactor. The reactor was kept at 635 ±2°C throughout the run after an initial drying period in which nitrogen was passed over the graphite while the reactor reached its operation temperature.

A fluorine-nitrogen mixture consisting of 25 cc/min fluorine and 50 cc/min nitrogen was passed through the reactor for 106-144 hours. After this time, the flow of fluorine was stopped and nitrogen was passed over the sample while the reactor cooled to room temperature. The sample trays were then removed and the white CF was separated from the gray CF and unreacted graphite. The white product was then sieved through a 140 mesh screen.

White CF prepared in this way always shows the presence of about 1% nickel fluoride (NiF_2). This NiF_2 presumably comes from the sample trays and from flaking of the inside of the nickel reactor tube. A number of methods were tried to remove this NiF_2 impurity. The wet methods tried included washing the product in solvents such as water, acetone, alcohol, methanol, carbontetrachloride, cyclohexane, dilute hydrochloric acid, dilute nitric acid, 10% methanol in water and 50-50 acetone-water mixture. None of these solvents completely separated the product from the NiF_2 impurity. In addition, it was found that washing the white CF produced a slightly off-color product. Because of these problems, several dry methods of separation were tried. These included centrifugation, a tangential air flow, and vertical and horizontal air flow. Here also, the impurity, NiF_2, could be decreased but not completely removed. Finally, a powder classifier which separates a mixture of two powders which differ in their densities was tried. (The density of NiF_2 is 4.63 g/cc where as that of CF is 2.58 g/cc.) The classifier used was a Bahco 600 micro-classifier. (H. W. Dietent Company, Detroit, Michigan) During the classification a very slow current of dry nitrogen was passed through the apparatus. It was found that this gas flow facilitates an even flow of

CF and resulted in an eventual separation of the desired white CF from the NiF_2. Classification of 10 g of CF required about half an hour.

The amount of NiF_2 present decreased considerably in the first classification (about 0.3-0.4%). A second classification further decreased the amount to less than 0.2%. After a third classification the amount of NiF_2 present was 0.1 ±0.02%.* Further classification apparently did not decrease the amount of NiF_2. Therefore all the remaining CF was classified successively three times before being finally analyzed prior to preparation for the low temperature heat capacity measurements.

2. Preparation of the Solid Fluorocarbon, $CF_{0.2369}$ (C_4F).

Two methods were used to prepare samples of a fluorocarbon approximating C_4F. These were a static, high pressure method and a flow method. The product of the static method was not judged of sufficient quality for use in the measurements when compared with properties of the product of the flow method.

a. High pressure method.

One gram of spectroscopic grade graphite (Carbon Products Division, Union Carbide Corp.) was placed in the bottom of a nickel bomb of 0.32 liter volume. The bomb was sealed, evacuated for one hour, and then filled with hydrogen fluoride to a pressure of one atmosphere. Then fluorine was allowed to very slowly enter the bomb. Uptake of fluorine and hydrogen fluoride was immediately evident by a pressure drop in the system. A minimum pressure of about 0.5 atmosphere was reached in the bomb at which point the pressure began to increase with continuing addition of fluorine. The addition of fluorine was continued until the pressure in the bomb was approximately 75 psi. At this stage the valve on the bomb was closed and allowed to stand for one hour. In order to remove the product, the fluorine was vented, the bomb was then evacuated and refilled with dry nitrogen to a pressure of one atmosphere before being opened.

Twelve batches of C_4F were prepared in this manner. The C_4F produced was pumped on for several days in a vacuum desiccator and then washed with

---

*These analytical results were based on Ni determinations preformed by various independent laboratories on samples taken at various stages of classification.

methanol, dried in an oven at 70-75 °C overnight and stored in a desiccator over calcium chloride. It was found that the product prepared in this way always contained higher percentages of fluorine than is called for in the formula C_4F. The reason for this behavior is not clear, and further work on this problem is being planned.

b. Flow method.

In a typical preparation approximately ten grams of spectroscopic grade graphite powder were uniformly spread out on a prefluorinated nickel boat. The reaction chamber was flushed with dry nitrogen for one hour to remove moisture from the sample. At the end of this time, hydrogen fluoride was passed through the system at about 2-6 cc/min. Then slowly, fluorine mixed with nitrogen (25 cc/min fluorine and 50 cc/min nitrogen) were added to the flow through the system. The fluorine-hydrogen fluoride flow was cut off after 24 hours, and the system purged with nitrogen for an hour after which the product was removed. The crude product was placed in an evacuated desiccator for one week and then washed in a methanol-water mixture (2:1). After drying in a oven at 70-75 °C overnight, the product was stored in a desiccator. The product prepared in this way seemed to be free of unwanted hydrogen fluoride and had the required amount of fluorine (see Part II, Table I.).

Fifteen preparations of C_4F with 10 g of graphite were carried out. Each was treated the same way. After about a week the weight loss in vacuum was negligible for each batch. From these fifteen batches, six which had reached constant weight were mixed together, and washed with a methanol-water mixture (2:1) until the filtrate was neutral on the pH scale. After filtering and drying at 70-75 °C for 24 hours, the sample was stored in vacuum until used.

Part II. LOW TEMPERATURE CALORIMETRY OF THE SOLID FLUOROCARBONS, $CF_{1.09}$(CF) AND $CF_{0.2369}$(C_4F).

1. Apparatus.

a. Cryostat.

The cryostat used in this research is of the Giauque-Sucken isothermal type. It carries the laboratory designation of Calorimeter B* and it has been previously described[1].

*We wish to gratefully acknowledge the loan of this calorimeter by Dr. John E. Kilpatrick of Rice University, Chemistry Department.

b. Sample container

Since all previous calorimetry in this laboratory had been done on materials which are liquids or gases at room temperature, the sample containers on hand were not suitable for loading with solids. It was necessary, therefore, to construct a new sample container for this research. The sample container that was constructed, consists of a copper cylinder, 7.3 cm long, 3.8 cm diameter, and 0.30 mm wall, closed at the top and bottom with end caps of 0.40 mm thickness.* Two wells, for the thermometer and heater, and a radial vane system run from the top of the body to within 4 mm of the bottom. The bottom cap has a 12 mm diameter hole in it for loading of the sample. A disc, 12 mm in diameter and 1.5 mm thick, with a coaxial tube, 2 mm in diameter, 6 mm long, and drilled out to 0.5 mm, was machined out of a single piece of copper. After the sample container is loaded with the material to be studied, the disc is flash soldered in place. The sample container is then placed in a bell jar and evacuated. After the bell jar and sample container are filled with helium at atmospherice pressure, the sample container is removed from the bell jar and a small brass cap is soldered over the end of the tube. The thermometer and heater are placed in their wells. Thermal contact with the walls of the wells is made with a fixed weight of Apiezon N grease.

The sample container has an internal volume of 75 cm^3 and weighs 81.9 gm complete with thermometer, heater, and leads. The heat capacity of the empty sample container was determined over the temperature range of 15 to 315 K.

c. Thermometer and temperature scale

The Meyer type platinum resistance thermometer used in this research was constructed in this laboratory[2] and carries the laboratory designation 100-4. It has been calibrated twice[2,3] and has shown good stability. It's ice point and hydrogen triple point resistance are 78.3 ohms and 0.11 ohms, respectively.

The thermometer is calibrated on the International Practical Temperature Scale of 1948 above 90 K and on the NBS - 55 Temperature Scale below 90 K. Since it is desirable to report new thermodynamic data on the

*The exterior surface is gold plated.

International Practical Temperature Scale of 1968, conversion of the results of this research to the new temperature was done by the method of Douglas[4]. The data for conversion of IPTS-48 results to IPTS-68 were taken from Douglas[4] while data for conversion of NBS-55 results to IPTS-68 were taken from Bedford, et al.[5]. All results reported herein are on the IPTS-68.

d. Measurements.

The apparatus used for making potential measurements has been described by Taylor[6], Putnam[7], and Johnson[8]. The temperature circuity and the method of taking temperature measurements have been described by McEachern[2], Taylor[6], and Johnson[8]. The power circuity and the method of taking power measurements have been described by Taylor[6] and Johnson[8]. The standardization of all e.m.f. and resistance standards is traceable back to the National Bureau of Standards.

2. The Fluorocarbon $CF_{1.09}$ (CF).

a. Sample.

Two preparations of CF were used in this research. They will be labeled CF-A and CF-B. Both materials are of the white grade. The elemental analysis of these compounds are summarized in Table I. The agreement between the two analytical laboratories and even between the same laboratory on different samples of the same material is poor for C, H, and F analysis. The indicated presence of H is bothersome. If this H is present as a low molecular weight species such as H_2O or HF, its contribution to the heat capacity of the CF would be significant. Personnel at commercial analytical laboratories have indicated in conversation that the reported levels of hydrogen are probably in error in the method. This is supported by an experiment in which pellitized CF* was placed in a vacuum line and was pumped on at a pressure of 2×10^{-5} mm of Hg for a period of 24 hours. The resulting weight loss was 0.003%.

b. Heat capacity and thermodynamic functions.

The sample container was initially loaded with [illegible]946 gm in vacuo of CF-A. Since liquid hydrogen was on hand, it was necessary to do the very low temperature measurements first. It was discovered that the thermal conductivity in the sample container was so low that it was impossible to

*This sample was comprised of CF-A and CF-B.

TABLE I.

Elemental Analysis of CF .

CF	Laboratory	%C	%F	%H	%Ni
A	G	35.55	64.02	0.09	0.04
		35.73	64.19	0.11	
A	E	35.91	64.31	0.03	0.05
B	G	36.28	63.62	0.14	0.11
		36.14	63.59	0.10	0.12
B	G	34.98	60.75	0.01	
B	E	35.48	63.26	0.00	0.10

Laboratory G: Galbraith Laboratories, Inc., Knoxville, Tennessee

Laboratory E: Elek Microanalytical Laboratories, Torrance, California

take meaningful measurements. This behavior continued to well above 120 K.

It was decided that compacting the material into pellets would probably improve the thermal conductivity. The CF was then compressed with a pellet press into pellets 3 mm in diameter by 3 mm long. The sample container was then loaded with a mixture of 28.5508 gm in vacuo of CF-A and 15.5564 gm in vacuo of CF-B.

The behavior with respect to thermal conductivity was satisfactory except at the very lowest temperatures in the liquid hydrogen region. At 15 K, the effect was large; it was smaller at 17 K and was not obvious at 19 K. The heat capacity data at temperatures below 30 K, however, were somewhat less precise than could normally be expected.

The experimental heat capacity points are presented in Table II in the order in which they were measured. They are corrected for the helium present in the sample container and for the presence of NiF_2. The NiF_2 heat capacity data of Catalano and Stout[9] were used to make the latter correction.

The precision is within 0.05% between 90 and 273 K, decreases slowly to 0.3% at 30 K, and then decreasing rapidly to 1% below 25. Above 273 K, the precision decreases slowly to 0.2% at 310 K.

The usual procedure of extrapolating the heat capacity data to 0 K using the Debye function was attempted. The data could not be fit with this type of function using an integer number of degrees of freedom. Graphite also exhibits this type of low temperature behavior[10,11].

The data was smoothed, extrapolated to 0 K, and used to generate the thermodynamic functions by means of the FITAB program[12]. The smoothed heat capacity and other thermodynamic functions at rounded temperatures are presented in Table III. The estimated uncertainity in the entropy at 298.15 K is 0.15%.

3. The Fluorocarbon $CF_{0.2369}$ (C_4F).

a) Sample.

The material used in this research was analyzed by Schwarzkopf Microanalytical Laboratory in Woodside, New York. The results are as follows:

% F :	27.24, 27.47
% C :	73.13, 72.85
% H :	0.00, 0.00

Since the material is prepared by fluorination at a relatively low temperature, contamination with NiF_2 is not a problem. The above analysis indicates a composition of $CF_{0.2369}$.

b. Heat capacity.

The sample container was loaded with 51.9712 gm *in vacuo* of C_4F. The material was loaded as a powder. Attempts had been made to compact the material into a solid pellet, but they were all unsuccessful. It was hoped that, since C_4F has a much greater electrical conductivity than CF and since materials with high electrical conductivity also have high thermal conductivity, the thermal conductivity of C_4F would be high enough that it could be studies as a powder. Experiments at 80 K showed no sign of inadequate thermal conductivity in the sample container. Since liquid hydrogen was on hand, the low temperature heat capacity was studied immediately. The experimental heat capacity points are presented in Table IV. They are corrected for the helium present in the sample container.

The precision at low temperatures is noticeably better than that of the CF results. It is better than 0.5% between 15 and 30 K and is better than 0.15% between 30 and 57 K.

As was the case with CF, the low temperature data could not be fitted with a Debye function. The FITAB program[12] was again used to extrapolate to 0 K and to generate smoothed heat capacities and entropies at rounded temperatures. The results are presented in Table V.

Part III. FLUORINE COMBUSTION CALORIMETRY OF $CF_{0.2369}$(C_4F).

1. Experimental Apparatus.

a. Fluorine system.

The fluorine used in the combustion experiments was transfered in a copper and stainless steel pressure/vacuum system of standard design[13]. At no time in any of the transfer operations did the fluorine pressure exceed 300 psi, although the system has been leak tested at over 600 psi

TABLE II.

The Heat Capacity of CF_4

T (K)	c_p (J/gm K)
Series A	
90.93	0.2168
99.12	0.2497
106.20	0.2775
113.99	0.3074
121.64	0.3359
129.13	0.3631
136.59	0.3888
144.78	0.4171
153.20	0.4447
161.47	0.4708
169.94	0.4967
178.88	0.5233
186.95	0.5463
195.70	0.5708
204.16	0.5936
211.98	0.6147
220.50	0.6373
228.99	0.6585
237.35	0.6799
245.50	0.6996
253.62	0.7185
261.25	0.7377
269.84	0.7573
277.49	0.7751
285.51	0.7918
293.07	0.8095

T (K)	c_p (J/gm K)
Series B	
57.54	0.09445
63.60	0.1145
69.05	0.1332
74.33	0.1526
79.78	0.1738
85.77	0.1974
91.53	0.2203
96.89	0.2415
103.34	0.2665
110.73	0.2953
117.31	0.3198
124.19	0.3453
131.54	0.3716
139.22	0.3984
147.22	0.4252
157.32	0.4582
165.77	0.4842
174.15	0.5098
182.16	0.5326
190.47	0.5569
199.35	0.5805
208.03	0.6043
216.81	0.6269
224.75	0.6475
233.39	0.6689
242.26	0.6910

T (K)	c_p (J/gm K)
Series B (cont.)	
251.08	0.7121
259.86	0.7330
270.84	0.7595
279.14	0.7797
287.29	0.7978
295.34	0.8171
303.42	0.8329
311.34	0.8492
Series C	
19.81	0.01492
21.86	0.01735
24.09	0.02095
26.45	0.02417
29.11	0.02875
31.99	0.03405
35.16	0.03995
38.80	0.04762
42.92	0.05650
47.58	0.06724
52.51	0.07993

TABLE III

The Thermodynamic Functions of CF at Rounded Temperatures.

T (K)	c_p (J/gm K)	s (J/gm K)	$(h-h_o)/T$ (J/gm K)	$-(g-h_o)/T$ (J/gm K)
0	0.0	0.0	0.0	0.0
5	0.00161	0.00089	0.00058	0.00031
10	0.00504	0.00299	0.00190	0.00109
15	0.00951	0.00585	0.00367	0.00218
20	0.01511	0.00932	0.00580	0.00352
25	0.02205	0.01341	0.00833	0.00508
30	0.03033	0.01814	0.01129	0.00685
35	0.03976	0.02351	0.01467	0.00884
40	0.05006	0.02949	0.01845	0.01104
45	0.06106	0.03601	0.02256	0.01345
50	0.07335	0.04306	0.02701	0.01605
55	0.08709	0.05069	0.03184	0.01885
60	0.1023	0.05891	0.03707	0.02184
65	0.1189	0.06775	0.04272	0.02503
70	0.1367	0.07720	0.04879	0.02841
75	0.1553	0.08726	0.05526	0.03200
80	0.1746	0.09790	0.06212	0.03578
85	0.1942	0.1091	0.06931	0.03976
90	0.2141	0.1207	0.07680	0.04394
95	0.2339	0.1328	0.08455	0.04829
100	0.2536	0.1453	0.09251	0.05283
110	0.2923	0.1713	0.1089	0.06241
120	0.3298	0.1984	0.1258	0.07261
130	0.3660	0.2262	0.1429	0.08335
140	0.4009	0.2546	0.1601	0.09457
150	0.4344	0.2834	0.1772	0.1062
160	0.4664	0.3125	0.1943	0.1182
170	0.4971	0.3417	0.2112	0.1305
180	0.5265	0.3710	0.2279	0.1430

(Table III cont.)

190	0.5550	0.4002	0.2444	0.1558
200	0.5826	0.4294	0.2606	0.1687
210	0.6094	0.4584	0.2766	0.1818
220	0.6355	0.4874	0.2923	0.1951
230	0.6609	0.5162	0.3078	0.2084
240	0.6856	0.5448	0.3230	0.2218
250	0.7098	0.5733	0.3380	0.2353
260	0.7337	0.6016	0.3528	0.2489
270	0.7573	0.6298	0.3673	0.2625
273.15	0.7647	0.6386	0.3719	0.2667
280	0.7807	0.6577	0.3817	0.2761
290	0.8036	0.6855	0.3958	0.2897
298.15	0.8218	0.7081	0.4072	0.3008
300	0.8258	0.7132	0.4098	0.3034
310	0.8466	0.7406	0.4236	0.3170

TABLE IV.

The Heat Capacity of C_4F.

T (K)	c_p (J/gm K)
Series A	
15.55	0.01649
17.19	0.01901
18.78	0.02159
20.70	0.02427
22.79	0.02750
25.34	0.03213
28.23	0.03752
31.32	0.04351
34.85	0.05074
38.63	0.05945
42.79	0.06949
47.43	0.08103
52.26	0.09364
57.58	0.1082

TABLE V.

The Heat Capacity and Entropy of C_4F at Rounded Temperatures.

T (K)	c_p (J/gm K)	s (J/gm K)
0	0.0	0.0
5	0.00289	0.00159
10	0.00882	0.00532
15	0.01575	0.01019
20	0.02324	0.01573
25	0.03149	0.02179
30	0.04079	0.02834
35	0.05123	0.03539
40	0.06269	0.04297
45	0.07491	0.05105
50	0.08770	0.05960
55	0.1010	0.06858

of helium. Pressure measurements were made with a Monel Bourdon tube gauge of sufficient accuracy for this work.

Commercially available (98% minimum purity) fluorine was used in all the combustion experiments. The major impurity was HF, which was removed by a sodium fluoride trap in the transfer line.

b. Combustion bomb.

The combustion bomb used in the experiment was fabricated of Monel (Parr Instrument Company, Moline, Illinois) with nickel fittings used inside where the sample was held in place prior to combustion. A modified two-chamber device which consisted of a nickel cup weighing approximately 58 grams, Figure 1. was used in the combustions.

In this device, the sample can be isolated from the fluorine within the bomb by means of a 0.001 inch tungsten foil held in place by a retaining ring and twelve metal screws. The support tube is made of nickel and can be screwed into the bomb head, seating into the connecting hole to a valve. Through this valve, helium can be added to pressurize the sample compartment sufficiently so that no fluorine can seep in and attach the sample prematurely. In practice, a helium pressure slightly greater than the fluorine pressure was employed.

c. Calorimeter.

The calorimeter used in the fluorine combustion experiments is a rotating bomb calorimeter built to Argonne National Laboratories design [illegible]-3986. The rotating feature was not used. A Bayley Instrument Company Model 123 proportional temperature controller was used to maintain the jacket temperature of the calorimeter isothermal at 26.5 °C to within ±0.002 °C. The ignition system used in the experiments was a condenser discharge design similar to that of Coughlin[14].

The energy equivalent of the calorimeter system, E°(calor), just as it was used to determine the reaction heats of $CF_{0.2369}$ with fluorine was found to be 3594.4 ±0.4 cal/deg. (four determinations, uncertainity is the standard deviation of the mean). In the calibration experiments, pure oxygen was used to burn a sample of National Bureau of Standards benzoic acid, sample 39i which has a heat of combustion of −6317.47 cal/g under the conditions supplied in a certificate by the NBS.

d. Thermometer.

Temperature changes in the calorimeter system were measured using a Dymec Model 2801 A quartz thermometer with a resolution of 0.0001 °.

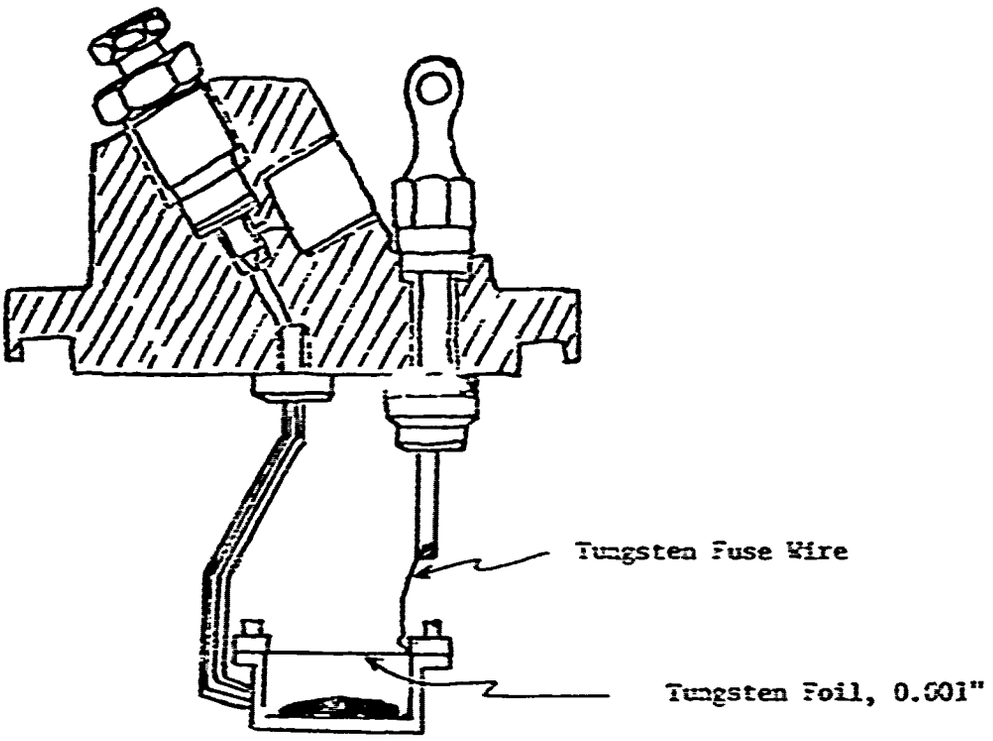

Figure 1. Diagram of the bomb head and sample isolation chamber. All internal fittings made of nickel. Sample is shown in the bottom of the cup.

Reproduced from best available copy.

The thermometer was used as a differential thermometer in comparisons of the calibration experiments to the combustion experiments on the compound of interest.

2. Combustion Techniques that Failed.

One of the major problems in fluorine calorimetry is sample preparation so that at the desired time the combustion reaction is initiated and proceeds to completion with few side reactions. The solid fluorocarbon, C_4F could be placed in an open nickel crucible inside the bomb filled with fluorine, and at the proper time ignited by some substance such as Teflon. This technique has been used with success in burning $CF_{1.12}$ in fluorine[15]. However, it was found that while the C_4F samples do not appear to react with high pressure fluorine prior to ignition, the material still is difficult to ignite completely due to the fact that it does not pelletize as $CF_{1.12}$ does and therefore is scattered in the turbulence of the fluorine flame.

Teflon powder and Teflon tape were used with some success to make mixtures of C_4F - Teflon which pelletized and could be placed in an open nickel crucible. Teflon tape ignited by a short 40-gauge nickel wire was used to ignite these pellets. Exceedingly large (~40 mg) residues were sometimes left in the crucible after combustion. These residues were gray-white in color. X-ray powder pattern data indicated the bulk of this solid to be CF. The stoichiometry of these residues was not determined since it was learned that powdered mixtures of C_4F and sulfur powder gave much more negative heats of combustion, Table VI.

Subsequent experiments on samples of C_4F with approximately 10% (by weight) powdered sulfur added indicated that complete combustion was not being achieved; again, see Table VI. The two-chamber technique was being used for these experiments since sulfur spontaneously ignites in fluorine.

3. The Successful Combustion Technique.

One other combustion technique which was tried was that of using powdered silicon sprinkled on the loose sample of C_4F. When fluorine comes in contact with silicon, immediate ignition takes place with a

TABLE VI.

Erroneous $\Delta E/M$ Values of C_4F.

Method	$\Delta E/M$ cal/g	ΔH_f° kcal/mole C_4F (derived)
C_4F-Teflon	-10,000	-58
C_4F-Sulfur	-11,002.7	-42

very high temperature produced. This method has been used to burn graphite satisfactorily[16].

The technique used initially consisted of weighing the powdered C_4F into a nickel cup of such dimensions so as to just fit into the larger nickel device (Figure 1). On top of this weighed sample was sprinkled powdered silicon (Electronic Space Products, Inc., Los Angeles, Stock No. K4695F, 99.999%) and the total sample reweighed. Next, the sample was placed in the nickel device which was then sealed with a 1 inch diameter 0.001 inch thick tungsten foil (A. D. Mackay Co., New York, 99.99%) by means of a retaining ring and twelve 4-40 screws. The nickel device was then screwed into the bomb head, the bomb was assembled, and connected to the (10^{-5}mm) pressure/vacuum line to be evacuated for two or three hours.

When the time came for the combustion experiment, helium was added to the nickel sample holder while fluorine was added to the bomb. By keeping a slightly greater helium pressure in the sample chamber, the possibility of fluorine leaking in to react with the sample was lessened. In all the experiments a final pressure of 220 psi helium and 200 psi fluorine at 25 °C was used.

Post-combustion analysis of the first four or five combustion experiments performed in the manner described above yielded results much more negative than the previous experiments using C_4F-Teflon and C_4F-sulfur. However, the scatter in the values was unacceptable. This scatter was found to be due to rather large amounts of graphite under the inner nickel sample cup. This material was presumably formed from C_4F which was blown around in the nickel crucible while helium was being added. It has been determined in this laboratory that at elevated temperatures C_4F decomposes to graphite and CF_4, so this would appear to be a logical explanation for the presence of the graphite.

In an effort to reduce the scatter in the results and at the same time reduce the size of the graphite residue, a new series of experiments was begun in which the smaller nickel sample cup was omitted. The C_4F-silicon mixture was weighed out into the more massive nickel crucible. The results of these experiments are reported in Table VIII.

4. Results of Combustion Runs.

Analysis of the combustion product gases was carried out by allowing a small portion of the gaseous contents of the bomb to fill an evacuated 10 cm gas IR cell fitted with CaF_2 windows. The only detectable gaseous products were CF_4 (g) and SiF_4 (g). The solid residues from each combustion experiment were weighed to ±0.02 mg after being carefully dusted from the bomb fittings. An X-ray powder pattern of this residue indicated it to be graphite.

Certain auxiliary data were employed in deriving the energy of combustion of the C_4F sample in fluorine. These data are given in Table VII. In the computation of the temperature changes, a computer program, CALOR[17], was used which utilizes a least aquares fit for the linear data in the initial and final periods of the combustion experiment, and a trapezoidal integration of the main period data immediately after ignition.

The combustion data have also been corrected to the standard states of 25°C, and 1 atmosphere pressure using the techniques described by Hubbard[13]. These small corrections appear as ΔE (contents) and ΔE (gas) in Table VIII.

All weights have been reduced to mass *in vacuo*[18].

CONCLUSIONS AND RECOMMENDATIONS

1. Future Samples.

There are a number of other solid fluorocarbons of the formula CF_n, where n = 0.4-0.9. Many of these compounds have already been tested and found to be useful cathodic depolarizers in conjunction with lithium in batteries[19]. A compound of this type, $CF_{0.7}$, has been prepared in this laboratory and is currently being purified. It is planned that c_p and heat of combustion measurements will be carried out in the near future.

Other carbon-containing compounds are planned for study as possible cathodic depolarizers after being fluorinated. If any of these compounds prove promising their thermochemical properties will also be studied.

2. Discussion of Heat Capacity Data.

The heat capacity curve of CF exhibits no unusual features except for its failure to follow a Debye function at low temperatures. This

TABLE VII.

Auxiliary Data (25 °C)

c_p (cal/deg. g.)		C_v (cal./deg. mole)	
Si	0.170[a]	F_2	5.49[a]
W	0.032[b]	SiF_4	15.61[a]
$CF_{0.2369}$	0.58[c]	WF_6	26.46[b]
		CF_4	12.61[a]

$\Delta E_c^\circ/M$ (cal/g)		$(\partial E/\partial P)_T$ (cal/atm. mole)	
C	-18,520.4[d]	F_2/CF_4 (mixture)	-2.058[d]
Si	-13,721.8[e]		
W	- 2,231.9[f]		

[a]National Bureau of Standards Technical Note No. 270-2, U.S. Government Printing Office, Washington, D. C. [b]JANAF Thermochemical Tables, Second Edition, NSRDS-NBS 37, U.S. Government Printing Office, Washington, D. C., 1971. [c]Estimated on the basis of c_p of graphite, CF and $CF_{0.24}$ at 50 K. [d]Reference 16. [e]S. S. Wise, J. L. Margrave, H. M. Feder, and W. N. Hubbard, J. Phys. Chem., 67, 815(1963). [f]P. A. G. O'Hara and W. N. Hubbard, J. Phys. Chem., 70, 3353(1966).

TABLE VIII.

Summary of Combustion Data on C_4F in Fluorine at 298.16 K.

	35-IV	40-IV	41-IV	42-IV	43-IV
m(compound), g	.30228	.30056	.30144	.30034	.30013
m(tungsten), g	.29304	.31849	.31546	.32350	.32115
m(silicon), g	.02926	.03178	.03055	.03429	.03121
m(residue), g	.00416	.00338	.00235	.00137	.00050
Δt_c, deg.	1.37471	1.39771	1.39934	1.42061	1.40897
E(calor)($-\Delta t_c$), cal	-4941.26	-5023.93	-5029.79	-5106.24	-5064.40
ΔE (contents), cal[a]	-1.73	-1.75	-1.76	-1.77	-1.76
ΔE (silicon), cal	401.50	436.08	419.20	470.52	428.26
ΔE (tungsten), cal	654.03	710.84	704.07	722.02	716.77
ΔE (gas), cal[b]	-0.07	-0.07	-0.07	-0.07	-0.07
ΔE(ign), cal	0.78	0.78	0.78	0.78	0.78
ΔE (residue), cal	-77.04	-62.57	-43.52	-25.37	-9.26
$\Delta E^\circ/M$ (compound), cal/g	-13,112.97	-13,115.65	-13,107.38	-13,113.00	-13,093.26

$$\Delta \overline{E}^\circ_c/M = -13{,}108.4 \pm 4.1^c \text{ cal/g}$$

[a] ΔE (contents) = E^i (cont)(t^i-25) + E^f (cont) (25-t^f + Δt corr); see Reference 13. [b] Sum of items 32 and 34 in Reference 13. [c] Standard deviation of the mean.

behavior is not suprising since graphite also behaves strangely at very low temperatures. Because of this behavior, more work will be done on the extrapolation to 0 K but it is not expected that there will be any significant changes in the thermodynamic functions at room temperature.

The heat capacity data for C_4F, although not complete up to room temperature, show a very surprising feature. This feature becomes obvious when comparing the heat capacities of one mole of graphite[10], one mole of CF, and one-fourth mole of C_4F given in Table IX. In each case the heat capacity is for an amount of material containing one mole of carbon. The fact that the addition of one fluorine atom to each carbon atom in forming CF raises the heat capacity of CF significantly above that of graphite is to be expected. The fact that adding one fluorine atom to every fourth carbon atom to form C_4F raises the heat capacity of C_4F almost to the level of that of CF is surprising. This disproportionally large heat capacity would indicate that the carbon-fluorine bonding in C_4F is quite different from that in CF.

3. Calculation of Gibbs Free Energy for Cell Reaction.

The heat of formation of CF_n with n = 1.12 was determined by Wood, et al.[15]. This was corrected for a new value of the heat of formation of CF_4[16] to give a value of -195.73 ± 0.96 kJ/mole for the heat of formation of CF_n with n = 1.12. Using this data and heat of formation data for other perfluorinated hydrocarbons[15], we can write for the heat of formation of CF_n

$$\Delta H^\circ_{f\ 298} = -258.0\ n + 93.3\ \text{kJ/mole}.$$

For the reaction

$$CF_n\ (s) + n\ Li\ (s) = n\ LiF\ (s) + C\ (s).$$

the enthalpy may be written as

$$\Delta H^\circ = n\ \Delta H_f\ (LiF) - \Delta H_f\ (CF_n)$$

Using the value for the heat of formation of LiF given in the JANAF Thermochemical Tables[20], we obtain

TABLE IX.

Relative Heat Capacities of Graphite, CF, and C_4F.

T (K)	Graphite c_p (J/mole K)	CF c_p (J/mole K)	C_4F c_p (J/½mole K)
15	0.043	0.311	0.260
25	0.126	0.721	0.520
50	0.507	2.399	1.448
150	3.232	14.21	
300	8.597	27.01	

$$\Delta H^\circ_{298} = -93.3 - 358.9\ n \qquad (\pm 1.3) \quad kJ/mole.$$

Using the entropy for CF_n with n = 1.09 as determined in this research, the entropy of graphite as given in JANAF Tables, and using the Kopp approximation we may write

$$S^\circ_{298}\ (CF_n) = 5.69 + 16.02\ n \qquad J/mole\ K$$

Using the JANAF entropy data for the entropies of lithium and lithium fluoride, we may write for the entropy change of the cell reaction

$$\Delta S^\circ_{298} = (-9.46 \pm 0.09)\ n \qquad J/mole\ K$$

The Gibbs free energy change for the cell reaction, then, is

$$\Delta G^c_{298} = -93.3 - 356.1\ n \qquad (\pm 1.3) \quad kJ/mole$$

Using the relationships,

$$E^\circ = -\frac{\Delta G^\circ}{nF}$$

and

$$\frac{dE^\circ}{dT} = \Delta S^\circ/nF$$

the standard potential and its temperature coefficient of the cell reaction may be calculated. These are tabulated as a function of n in Table X. Note that the equation for the temperature coefficient may be combined with the expression for ΔS°_{298} to give

$$\frac{dE^\circ}{dT} = \frac{-9.46}{F} = 0.0001 \quad v/K$$

and does not vary with n.

In the near future, we will generate a table of Gibbs free energy for the cell reaction as a function of temperature.

4. C_4F Data.

Using the energy of combustion of the sample $CF_{0.2359}$ in fluorine and the best available heat of formation value for CF_4 (gas)[16], it is possible to derive values for the enthalpy of combustion and enthalpy of

formation of $CF_{0.2369}$ at 298.15 K. These values are summarized in Table XI. When sufficient heat capacity data have been gathered for this compound (see 2, above) it will be possible to calculate ΔG° and E° for the electrochemical reaction

$$CF_{0.2369}(s) + 0.2369\ Li\ (s) \rightarrow 0.2369\ LiF(s) + C\ (s).$$

TABLE X

Changes in Certain Thermodynamic Quantities of CF_n for Various Values of n

n	$-\Delta S^\circ_{298}$ (J/mole K)	$-\Delta G^\circ_{298}$ (kJ/mole)	E° (volts)
0.7	6.62 ±0.06	342.6	5.07
0.8	7.57 ±0.07	378.2	4.90
0.9	8.51 ±0.08	413.8	4.76
1.0	9.46 ±0.09	449.4	4.66
1.1	10.41 ±0.10	485.0	4.57
1.12	10.59 ±0.10	492.1	4.55

TABLE XI.

Derived Data for C_4F at 298.16 K.

$$CF_{0.2369}(s) + 1.8815\ F_2\ (g) \rightarrow CF_4\ (g)$$

$$\Delta E_c^\circ = -905.58 \pm 0.28^a \quad kJ/mole^b$$
$$\Delta H_c^\circ = -907.76 \pm 0.28 \quad kJ/mole$$

$$C\ (graphite) + \frac{0.2369}{2} F_2\ (g) \rightarrow CF_{0.2369}\ (s)$$

$$\Delta H_f^\circ = -25.43 \pm 0.84 \quad kJ/mole^c$$

---

[a]Standard deviation of the mean. [b]Thermochemical calorie = 4.184 J.
[c]Referred to ΔH_f° (CF_4, g) = -933.20 ±.75 kJ/mole; Reference 16.

LITERATURE CITED

1. R. D. Taylor, B. H. Johnson, and J. E. Kilpatrick, J. Chem. Phys., 23, 1225 (1955).

2. D. M. McEachern, Jr., "The Entropy and Related Thermodynamic Properties of Dimethoxymethane," Ph.D. Dissertation, Rice University, 1961.

3. A. J. Valerga, "The Entropy and Related Thermodynamic Properties of Tetramethylgermane," Ph.D. Dissertation, Rice University, 1970.

4. T. B. Douglas, J. Research Natl. Bur. Std., 73A, 451 (1969).

5. R. E. Bedford, M. Durieux, R. Muijlwifk, and C. R. Barber, Metrologia, 5, 47 (1969).

6. R. D. Taylor, "The Heat Capacities, Heats and Temperatures of Transitions, and the Entropy of 1,2,3-Trimethylbenzene and of 1,3,5-Trimethylbenzene," Ph. D. Dissertation, Rice University, 1954.

7. W. E. Putman, "The Heat Capacities, Heats and Temperatures of Transitions, and the Entropy of 1,2,4-Trimethylbenzene and Acetonitrile," Ph.D. Dissertation, Rice University, 1955.

8. B. H. Johnson, "The Heat Capacities, Heats and Temperatures of Transition, and the Entropy of 1,2,3-Trimethylbenzene," Ph. D. Dissertation, Rice University, 1951.

9. E. Catalano and J. W. Stout, J. Chem. Phys., 23, 1284 (1955).

10. W. DeSorbo and W. W. Tyler, J. Chem. Phys., 21, 1660 (1953).

11. J. Krumhansl and H. Brooks, J. Chem. Phys., 21, 1663 (1953).

12. B. H. Hustice, "Thermal Data Fitting with Orthogonal Functions and Combined Table Generation. The FITAB Program," Atomic Energy Commission Cryogenic Project Report COO-1149-143, 1969.

13. W. N. Hubbard, "Experimental Thermochemistry," vol. 2, H. A. Skinner, editor, Interscience Publisher, New York, 1962, p. 95.

14. J. L. Laucina, A. J. Elzer, and J. P. Coughlin, 18th Calorimetry Conference, Bartlesville, Okla., October, 1963.

15. J. L. Wood, R. B. Badachhape, R. J. Lagow, and J. L. Margrave, J. Phys. Chem., 73, 3139 (1969).

16. E. Greenberg and W. N. Hubbard, J. Phys. Chem., 72, 222 (1968).

17. D. W. Bonnell, CALOR, Rice University, 1972.

18. J. E. Lewis and L. A. Woolf, J. Chem. Educ., 48, 639 (1971).

Literature Cited Cont.

(19) N. Watanabe, et al., U.S. Patent No. 3,536,532, October 27, 1970.

(20) JANAF Thermochemical Tables, NSRDS-NBS 37, U.S. Government Printing Office, Washington, D. C., 1971.