AD-755 683

MULTIPLE DOPED ERBIUM LASER MATERIALS

Richard F. Woodcock

American Optical Corporation

Prepared for:

Army Electronics Command
Advanced Research Projects Agency

January 1973

DISTRIBUTED BY:

NTIS

National Technical Information Service
U. S. DEPARTMENT OF COMMERCE
5285 Port Royal Road, Springfield Va. 22151

AD

AD755683

Research and Development Technical Report
ECOM-0053-1

MULTIPLE DOPED ERBIUM LASER MATERIALS

SEMIANNUAL REPORT
by
Richard F. Woodcock

January 1973

SPONSORED BY
ADVANCED RESEARCH PROJECTS AGENCY
ARPA ORDER NO. 1464

DISTRIBUTION STATEMENT
Approved for public release;
distribution unlimited.

D D C
RECEIVED
FEB 27 1973
B

ECOM

Reproduced by
NATIONAL TECHNICAL
INFORMATION SERVICE
U S Department of Commerce
Springfield VA 22151

UNITED STATES ARMY ELECTRONICS COMMAND · FORT MONMOUTH, N.J.

Contract DAAB07-72-C-0053
AMERICAN OPTICAL CORPORATION
Southbridge, Massachusetts, 01550

20

NOTICES

Disclaimers

The findings in this report are not to be construed as an official Department of the Army position, unless so designated by other authorized documents.

The citation of trade names and names of manufacturers in this report is not to be construed as official Government indorsement or approval of commercial products or services referenced herein.

Disposition

Destroy this report when it is no longer needed. Do not return it to the originator.

ACCESSION for
NTIS White Section
DDC Buff Section
UNANNOUNCED
JUSTIFICATION
BY
DISTRIBUTION/AVAILABILITY CODES
Dist. AVAIL. and/or SPECIAL
A

UNCLASSIFIED
Security Classification

DOCUMENT CONTROL DATA - R & D

(Security classification of title, body of abstract and indexing annotation must be entered when the overall report is classified)

1. ORIGINATING ACTIVITY (Corporate author) American Optical Corporation Research Division Southbridge, Massachusetts 01550	2a. REPORT SECURITY CLASSIFICATION Unclassified 2b. GROUP N/A

3. REPORT TITLE

MULTIPLE DOPED ERBIUM LASER MATERIALS

4. DESCRIPTIVE NOTES (Type of report and inclusive dates)

Semiannual Report (1 October 1971- 31 March 1972)

5. AUTHOR(S) (First name, middle initial, last name)

Woodcock, Richard F.

6. REPORT DATE January 1973	7a. TOTAL NO. OF PAGES 13	7b. NO. OF REFS 2
8a. CONTRACT OR GRANT NO. DAAB07-72-C-0053 b. PROJECT NO. 7910.21.702.55.01 c. d.	9a. ORIGINATOR'S REPORT NUMBER(S) TR-622-1 9b. OTHER REPORT NO(S) (Any other numbers that may be assigned this report) ECOM-0053-1	

10. DISTRIBUTION STATEMENT

11. SUPPLEMENTARY NOTES Sponsored by Advanced Research Projects Agency - ARPA Order No. 1464	12. SPONSORING MILITARY ACTIVITY U. S. Army Electronics Comman Fort Monmouth, N.J. 07703 Attn: AMSEL-TL-SM

13. ABSTRACT

The goal to be attained under this contract is to develop erbium doped laser glasses whose performance characteristics exceed those of previously developed erbium doped materials. One approach is to optimize the laser rod configuration. The effect of laser rod length on laser threshold and efficiency is reported. Consideration was given to the Double-U laser rod which should provide more efficient coupling; preliminary results are discussed.

A second approach is to develop high purity phosphated core and cladding glasses which combine the higher oscillator strength of the phosphate glasses with the improved sensitization technique of incorporating the sensitization agent in the cladding material. Efforts toward obtaining these high purity phosphate glasses, fabrication problems of clad rods, sensitization of the cladding and determination of core and cladding compatibility are discussed. Finally, conclusions are presented and the direction of the future efforts are given.

DD FORM 1 NOV 65 1473

I

UNCLASSIFIED
Security Classification

14 KEY WORDS	LINK A ROLE	LINK A WT	LINK B ROLE	LINK B WT	LINK C ROLE	LINK C WT
Lasers						
Glass lasers						
Erbium lasers						
Erbium doped glass						
Glass cladding						
Phosphate glasses						
Laser configurations						

Technical Report ECOM-0053-1
January 1973

Reports Control Symbol
OSD-1366

MULTIPLE DOPED ERBIUM LASER MATERIALS

SEMIANNUAL REPORT

1 October 1971 - 31 March 1972

Contract DAAB07-72-C-0053

DA Project No. 7910.21.702.55.01

Prepared by

Richard F. Woodcock
American Optical Corporation
Southbridge, Massachusetts 01550

For

United States Army Electronics Command
Fort Monmouth, New Jersey

DISTRIBUTION STATEMENT
Approved for public release;
distribution unlimited.

III

FOREWORD

The efforts reported herein were accomplished under Contract No. DAAB07-72-C-0053, Project No. 7910.21.702.55.01 for the Microwave and Quantum Electronics Branch of the Solid State and Frequency Control Division of the Electronics Components Laboratory, U.S. Army Electronics Command, Fort Monmouth, New Jersey. Contractors representatives were Dr. E. Schiel and Dr. H. Hieslmair.

The work was carried out by the Basic Materials Research Department of the Research Division of the American Optical Corporation in Southbridge, Massachusetts under the direction of Dr. Richard F. Woodcock who was project scientist and author of this report.

This research was supported by the Advanced Research Projects Agency of the Department of Defense and was monitored by the U.S. Army Electronics Command under Contract No. DAAB07-72-C-0053.

This report is unclassified.

TABLE OF CONTENTS

		PAGE
1.	INTRODUCTION	1
2.	TECHNICAL APPROACH	1
	2.1 OPTIMIZATION OF LASER ROD CONFIGURATION	1
	2.1.1 Cylindrical Rod Dimensions	1
	2.1.2 Double-U Laser Rod Configuration	5
	2.2 CLAD PHOSPHATE LASER RODS	7
	2.2.1 High Purity Phosphate Core and Cladding Glasses	7
	2.2.2 Fabrication of Clad Phosphate Rods.	8
	2.2.3 Sensitized Phosphate Cladding Glass	9
	2.2.4 Core and Cladding Glass Compatibility.	10
3.	CONCLUSIONS	11
	REFERENCES	13

Preceding page blank

MULTIPLE DOPED ERBIUM LASER MATERIALS

1. INTRODUCTION

This semiannual technical report covers work performed under Project DAAB07-72-C-0053 entitled "Multiple Doped Erbium Laser Materials" during the six month period ending 31 March 1972. The goal of this work is to develop erbium doped laser glasses whose performance characteristics exceed those of previously developed erbium doped materials. An attempt will be made to achieve a pulsed laser output of 50 mJ for an input of 50 J or less.

One phase of this investigation will be an attempt to optimize the laser rod configuration including length, diameter, number of active rare earth ions in the core glass and improved optical coupling between flashlamp and laser rod through the use of laser rods of the double-U configuration.

In addition to the above approach which will be carried out using silicate-based laser glass materials, an attempt will be made to develop clad erbium laser rods from phosphate-based laser materials. The goal in this case is to combine the higher oscillator strength of the phosphate glasses with the improved sensitization technique of incorporating the sensitizing agent in the cladding material. Information gained in the configuration studies will be applied to the phosphates in the final samples. During this period work has been performed in all of the above areas.

2. TECHNICAL APPROACH

2.1 OPTIMIZATION OF LASER ROD CONFIGURATION

2.1.1 Cylindrical Rod Dimensions

The effects of varying the concentration of active rare earth ions on laser properties such as laser threshold and laser efficiency have been previously reported.[1] In the present effort, an attempt is being made to isolate the effects of laser rod length and laser rod diameter on laser threshold and efficiency. The first phase of the program, to isolate the effects of laser rod length, has been completed. This study was carried out using silicate-based glasses because clad stock or laser rods were available in many cases and the silicate materials are, in general, much easier to make.

Results of this study are given in Table I. Glass compositions were chosen such that the total number of erbium ions in the core glass would be kept approximately constant for a series of laser rods in which the rod length was varied from 38 to 114 mm. Laser threshold and slope efficiency were determined in laser cavities with output reflectivities of 65, 80 and 90%. As indicated in Table I, the best results are obtained when the length of the laser rod is kept to a minimum. In all cases the core diameter of the rods was 4 mm and the cladding diameter was 6 mm. Power to the flashlamp is stored in the 760 μF storage capacitor and is discharged through a 4,460 μH inductance.

Difficulties were encountered in operating the longer flashlamps at low input energies without modifying the lamp circuitry and thus the pump pulse duration. The minimum firing voltage of these flashlamps is 600 volts or more which results in an input energy greater than 100 J. Since this input could result in output energies greater than the 50 mJ output energies of interest and in order to get accurate data in the region between laser threshold and 50 mJ of output energy, the electrical circuit for the flashlamps was modified as shown in Figure 1.

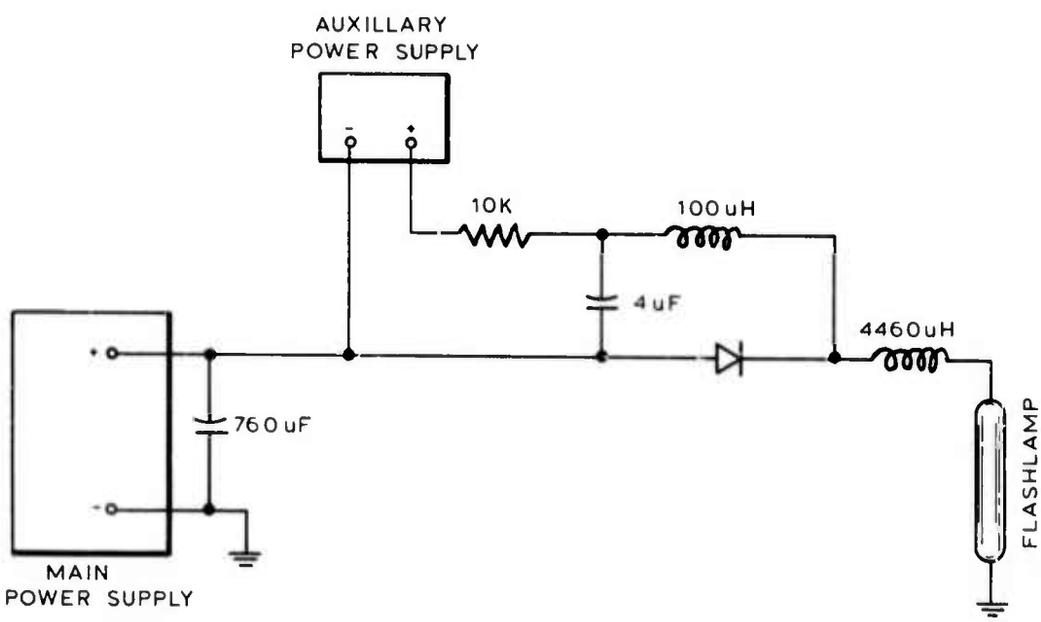

Figure 1. Modified flashlamp circuit

TABLE I. LASER ROD LENGTH VS LASER CHARACTERISTICS

Glass Composition		Nominal Er_2O_3 conc. (wt%)	Rod length[a] (mm)	Output Reflector (%)	Laser Threshold (J)	Slope Eff. (%)	Input Energy for 50 mJ output (J)
Core	Cladding						
2101	2400	0.3	38	65	77	0.22	98
				80	68	0.23	90
				90	80	0.09	137
2453	2400	0.25	50	65	92	0.26	106
				80	93	0.23	116
				90	90	0.11	136
2450	2400	0.20	67	65	92	0.35	104
				80	100	0.34	112
				90	100	0.17	124
2430	2400	0.15	76	65	100	0.15	130
				80	92	0.13	130
				90	148	0.08	148
2445	2400	0.10	114	65	100	0.06	173
				80	104	0.19	128
				90	150	0.06	232

[a]All laser rods have 4 mm core diameter and a 6 mm cladding diameter.

This modification consists of a small auxiliary condenser of 4 μF capacitance with its own power supply and appropriate diodes to prevent shunting. The storage condenser of the main power supply provides the major portion of the energy delivered to the flashlamp but at a voltage which may be below the firing voltage of the lamp. The auxiliary condenser supplies a small fraction of the total energy delivered to the lamp, 0.5 joules or less. The voltage on this condenser in combination with that of the main power supply must exceed the required minimum firing voltage of the lamp. When the lamp is triggered in the normal manner this combined voltage of 600 volts or more across the flashlamp creates a low resistance plasma in the lamp even though the major portion of this voltage may be supplied by a very low capacitance condenser. This allows the main power supply capacitor, which supplies the major portion of the energy for the flashlamp, to discharge across the tube even though its voltage may be well below the minimum firing voltage of the flashlamp. In this way, voltage on the main storage condenser for a flashlamp with a 76 mm arc length has been reduced from greater than 600 V to 200 V, which corresponds to input energies of 137 J and 15 J respectively.

One additional factor which has been taken into account is the residual energy left in the main storage condenser after the flashlamp has "turned off." Measurement of this residual energy was made for the various flashlamps used in these studies. This information has been plotted as the electrical energy input to the storage condenser vs electrical energy extracted from the storage condenser in Figure 2. As may be seen in these plots, the largest correction, percentage-wise, occurs for the longer flashlamps at the lower energies. For example, the lamp with a 114 mm arc length when pumped by the storage capacitors charged to 34 J would deliver only 17 J or half the stored energy to the flashlamp. For most of the measurements to date, this is a minor correction but may become significant if measurements on laser rods with thresholds of 50 J or less are to be made in the future.

The next step in the optimization of laser rod configuration will be an investigation of the effect of rod diameter on laser characteristics keeping the length and number of erbium ions in the core constant. Additional melts of silicate glass necessary for this investigation have been made. Fabrication of clad stock from these melts and existing materials is now in progress. Testing of laser rods from this stock will proceed as they become available.

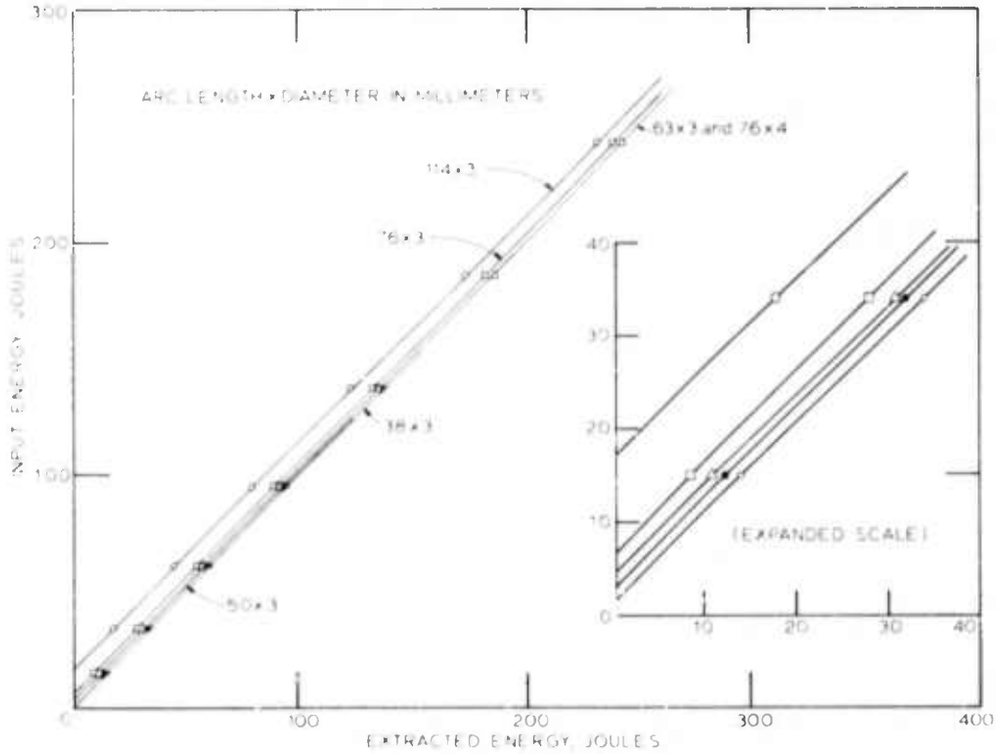

Figure 2. Stored vs extracted energy of main power supply condenser for various flashlamps. Flashlamps are designated by their arc length and bore diameter.

2.1.2 Double-U Laser Rod Configuration

In order to provide more efficient coupling between the flashlamps and the laser rod the "double-U" configuration has sometimes been used[2]. The double-U configuration used in the past is shown in Figure 3a. The core and cladding materials are the same as those used in sensitized cylindrical clad laser rods. There is some question whether the fluorescent light originating in the sharp corners of the cladding glass ever reaches the core glass. The cross section shown in Figure 3b, which contains just an annulus of the sensitized cladding glass in a clear outer cladding of double-U configuration to provide improved optical coupling, is an attempt to combine the advantages of the improved coupling provided by the double-U configuration and the improved pumping provided by a sensitized cladding.

In order to make a comparison between the previously used double-U laser rod configuration and the double-U laser rod with a clear outer cladding, it would be desirable to have the core glass and sensitized cladding glass of these two configurations

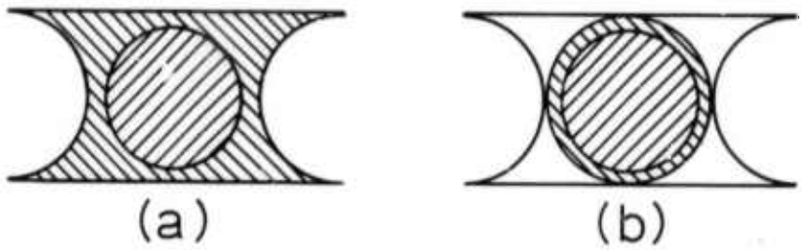

Figure 3. Cross Sections of Double-U Laser Rod Configurations

(a) Active cylindrical core with "double-U" cladding uniformly doped with Nd_2O_3 and Yb_2O_3 to provide both sensitizing cladding and optical coupling.

(b) Active cylindrical core with cylindrical cladding doped with Nd_2O_3 and Yb_2O_3 to provide sensitization and an undoped "double-U" cladding to provide optical coupling.

made from the same glass composition, preferably from the same melts of these compositions. Clad cylindrical rods fabricated from the same core and cladding glass melts as the previous double-U configurations have been located in existing stock. The sensitized cladding of this stock was ground down to the proper size ratio for fabrication of a double-U rod with a clear outer cladding.

A series of strain-fusion experiments was performed which suggests that a 1045 ophthalmic crown glass would be a very suitable material for the clear cladding component of this composite laser rod configuration. Preliminary laser tests were made on this material after it had been drawn to the proper core diameter, but with the clear outer cladding still in a rectangular cross-section prior to grinding to the double-U configuration. The results were not encouraging due in part to negative optical power in the core glass believed to have developed during the drawing process. Further work on this configuration will be of a low priority until the more important question of phosphate glass purity has been solved.

2.2 CLAD PHOSPHATE LASER RODS

This phase of the program may be subdivided into the following tasks: (1) development of high purity phosphated core and cladding glasses, (2) development of core and cladding compositions with thermal characteristics of sufficient compatibility to permit the fabrication of clad rods, (3) development of sensitized phosphate cladding glass compositions, and (4) development of techniques for drawing clad phosphate laser rods. The latter could require some modification in glass composition if devitrification during the drawing process becomes a problem.

2.2.1 High Purity Phosphate Core and Cladding Glasses

One of the primary goals of the program is the development of an ultrahigh purity, clad erbium phosphate laser rod. This requires a source of high purity raw ingredients from which the glass batch can be mixed and a crucible of high purity in which the glass can be melted. Locating a source of pure phosphate material (either the oxide or a phosphate compound, which will not alter the glass composition) has been of prime concern from the beginning of the program since P_2O_5 is the major constituent of the glass. Pure sources of this material have not proven to be readily available.

The purest source of P_2O_5 obtained to date is crystalline ammonium dihydrogen phosphate (ADP). Difficulties were encountered with crucible failure when attempts were made to melt glasses in high purity crucibles using this material. A variety of different alumina and mullite type crucibles were investigated in an attempt to solve the crucible problem. Unfortunately, as the purity of the crucible is increased the susceptibility to thermal shock becomes worse. Even impure crucibles, which are least susceptible to thermal shock, failed when ADP was used as a batch ingredient.

Attempts to make glass in high purity mullite crucibles using $Al(PO_3)_3$ as the source of P_2O_5 have been successful. This is an ideal material to work with but pure sources of $Al(PO_3)_3$ have not been located. These results however indicate that the crucible problem is probably associated with thermal shock due to the water vapor given off by the ADP. The temperatures at which the ADP melts, gives off ammonia and gives off water have been determined and with this in mind the glass melting procedures are now being investigated in an attempt to reduce shock to the crucible.

Efforts to produce high purity phosphate glasses will continue to receive highest priority. In addition, attempts

will be made to enhance the oxidizing conditions under which the glasses are melted in order to shift the valence of any iron contamination which may be present from Fe^{2+}-ions to Fe^{3+}-ions which adsorb in a less harmful region of the spectrum.

2.2.2 Fabrication of Clad Phosphate Rods

In the fabrication of clad rods, the core and cladding glasses are simultaneously fused and drawn to a predetermined diameter. In order to gain some knowledge of the drawing characteristics of phosphate glasses a study was initiated using phosphate glasses made from ingredients of questionable purity but which are easier to make. In this way, the problems encountered in melting high purity phosphate glasses do not hold up the whole program.

Initial drawing experiments were carried out with just the cladding glass, MG2416 containing 9 wt % Y_2O_3, the initial melts of which indicated some potential problems with devitrification (cf. Section 2.2.4). The drawing operation was performed over a range of furnace temperatures between 1540°F and 1400°F. The actual temperature of the glass moving through the furnaces is somewhat less than this but it is not easily monitored. The upper temperature is that at which the glass can be "baited," i.e. gripped with tongs and drawn manually. The lower temperature is that at which a rod about 2 mm in diameter, being machine drawn at a slow uniform rate, breaks under tension. Between these two limits rods were drawn successfully which showed only a few signs of surface devitrification.

This result was very encouraging since it indicates that it may be possible to draw phosphate rods without modifying the present glass compositions. Based on this experience, clad phosphate rods were drawn using the MG2416 glass as a cladding and MG2146 as the core material. The former is a zinc aluminophosphate containing 3 wt % Nd_2O_3, 3 wt % Yb_2O_3 and 9 wt % Y_2O_3 and the latter is a similar base glass containing 15 wt % Yb_2O_3 and 0.5 wt % Er_2O_3. Rods prepared from this clad stock were of very poor optical quality, but appeared to be free of devitrification or discoloration. The latter is sometimes observed in phosphate glasses which have been heated just enough to cause phase separation, a precursor to devitrification. This limited experience indicates that drawing conditions should be achievable which will permit the fabrication of the desired clad phosphate rods once the pure materials are available.

2.2.3 Sensitized Phosphate Cladding Glass

A series of small (50 gm) melts of zinc-aluminum-phosphate glasses was made which contained 4 wt % Yb_2O_3. In most cases, these glasses contain 4 wt % Nd_2O_3 as a sensitizing agent. An additional sensitizing agent candidate was also present in most of these glasses, namely 1-4 wt % CeO_2, 0.1-4 wt % MnO, 0.2-1.0 wt % Cr_2O_3, 0.2-1.0 wt % UO_2, 0.5-4.0 wt % MoO_3, PbO and Sb_2O_3 The CeO_2 was frequently added in combination with the latter oxides.

The cladding glass serves as a sensitizing agent by emitting Yb^{3+}-ion fluorescence which then excites the Yb^{3+}-ions in the core glass. Thus, a rough indication of the effectiveness of the various ions to serve as sensitizing agents in the cladding glass is obtained by monitoring the Yb^{3+}-ion fluorescence from these glasses which results from three types of irradiation: (1) illumination with a narrow band of light centered at 970 nm to excite just the Yb^{3+}-ions and thus serve as a reference for normalizing the fluorescence from a particular sample, (2) illumination with just visible light which excites only the sensitizer ions and not the Yb^{3+}-ions directly (excluding $Ce^{3+,4+}$ excitation which occurs in the uv), and (3) illumination with "white" light (no filters) to indicate the combined effects of sensitizer excitation and direct Yb^{3+}-ion excitation. In all cases the light source was a high pressure mercury lamp with quartz optics.

As expected, the most dramatic improvement in Yb^{3+} fluorescence is obtained by the addition of Nd^{3+}-ions to the glass. Preliminary results indicate that the addition of Ce^{3+}-ions or Pb^{2+}-ions, added singly to the Yb^{3+} glass, provides some sensitization but that Ce^{3+} or Pb^{2+} in combination with Nd^{3+} is about the same as Nd^{3+} alone.

Six compositions containing MnO were made with varying oxidation-reduction conditions. Only one of these, a composition containing 0.5 wt % MnO, produced absorption spectra which showed clear evidence of the manganese being present as the desired Mn^{2+} rather than Mn^{3+} or some other valence. This glass showed some increase in Yb^{3+} fluorescence which may be due in part at least to a slightly higher Yb^{3+} concentration as indicated both by absorption spectra and by the fluorescence intensities when just the Yb^{3+}-ions are excited directly.

The addition of Cr_2O_3 to the composition resulted in the formation of the desired Cr^{3+}-ions but produced very poor Yb^{3+} fluorescent intensities. The Cr^{3+} absorption bands were quite strong in all glasses and conceivably better results could be

obtained with lower Cr_2O_3 concentrations. Fluorescent lifetime of the Yb^{3+}-ion should be checked to see if quenching is taking place due to the presence of Cr^{3+}-ions.

Several melts were made with varying concentrations of UO_2 but absorption spectra indicate that the uranium is not present as the uranyl ion. Additional melts should be tried under more oxidizing conditions.

The glasses containing Sb_2O_3 were strongly absorbing throughout the visible indicating a far too strong reducing condition. Both glasses show considerable absorption at 1.06 μm and very little fluorescence.

Two valences of molybdenum were observed but neither gave encouraging results. Fluorescent lifetimes of emission from the Yb^{3+}-ions should be measured to check for quenching due to the "sensitizer ions."

2.2.4 Core and Cladding Glass Compatibility

One of the first steps in the development of a clad erbium laser rod made from a phosphate-based glass is the determination of the compatibility of the core and cladding materials. In the silicate studies on clad configurations, the difference between the 15 wt % concentration of rare earth in the core and the 5 to 8 wt % concentration of rare earth in the cladding was compensated for by the addition of Y_2O_3 to the cladding glass. A similar type of study has been carried out with the phosphate-based materials.

Compatibility is determined by fusing together, in sandwich fashion, a 10 mm x 10 mm x 30 mm bar of core material between two 3 mm thick plates of cladding material. The resulting strain-fusion sample is 1.6 mm high x 10 mm wide and 30 mm long. The long surfaces normal to the interfaces between the core and cladding glasses are polished so that the retardation resulting from the stress induced at the interface may be measured over a 1 cm long pathlength.

Measurements were made on a series of cladding glass containing varying amounts of Y_2O_3 fused to a core glass containing 15% Yb_2O_2 and 0.5% Er_2O_3. The best results in this series of phosphate glasses were obtained when 9 to 10 wt % Y_2O_3 was present in the cladding glass. The strain-fusion data indicated that both of these cladding glasses would be in tension and that additional Y_2O_3 would be required to reach the point where the cladding would no longer be in tension. In both of these compositions the initial melts indicated that there may be problems with devitrification of

these compositions containing high concentrations of Y_2O_3. This difficulty was not encountered in melts of lower Y_2O_3 concentration.

Additional strain-fusion measurements have been made between the cladding glasses containing 9 or 10 wt % Y_2O_3 and other phosphate compositions which contain 15 wt % Yb_2O_3 in addition to small amounts of other rare earth oxides. Variations in these core glass materials include the addition of B_2O_3 and SiO_2 to the composition, substitution of MgO for ZnO, partial substitution of Al_2O_3 by Y_2O_3 on a molar basis and variations in the concentrations of ZnO and Al_2O_3.

The core composition containing B_2O_3 and SiO_2 shifted the strain relationship between core and cladding in the proper direction but a larger shift in this same direction would be required to eliminate tensile strain in the cladding completely. Decreasing the Al_2O_3 concentration in the core glass also shifts the strain relationship in the proper direction and by a significant amount. Presumably, increasing the alumina content of the cladding glass would have the same effect. The core glasses containing B_2O_3 and SiO_2 are known to have good laser properties, but data do not exist on the lasing characteristics of the core glasses with decreased Al_2O_3 concentration.

3. CONCLUSIONS

Some progress has been made in the optimization of the laser rod configuration for maximum efficiency at 50 mJ output. The present study indicates that short (38 mm) rods in which the core diameter and number of active Er^{3+}-ions are kept constant are more efficient at this output than longer (up to 114 mm) rods. This work is continuing with an investigation of the effect of rod diameter on laser characteristics. This study is designed to tell us whether efficiency improves as the core diameter increases for the case in which rod length and the number of active Er^{3+}-ions is kept constant. Previous results indicated this was the case for rods in which the core material remained the same, i.e. the number of erbium ions is increased as the area of the core increased.

Results on the investigation of sensitizing agents in phosphate cladding glasses are in the preliminary stage. The initial Mn^{2+}-containing glasses are encouraging but higher concentrations appear to be required in order to obtain significant benefit from this material as a sensitizing agent. Further work is required to incorporate uranium in the glass as the uryanl ion. Lifetime measurements of the Yb^{3+} fluorescence of

these potential cladding glasses will be made to investigate the possibility of quenching by the sensitizing ion.

Manufacture of high-purity phosphate core and cladding glasses continues to be a problem. Recent studies appear to have identified the problem as one of thermal shock to the crucible as a result of the use of ADP, which gives off large volumes of ammonia and water vapor during the melting process, as the source of pure P_2O_5. With the cause identified, efforts are being made to adjust our melting procedures to solve the problem.

Compositional studies to develop compatible glasses for core and cladding material appear to be reasonably successful. One of the promising combinations utilizes a cladding glass containing a moderate amount of Y_2O_3 which shows some tendency toward devitrification. Investigation of the drawing characteristics of this material singly and as a clad laser rod, in combination with a phosphate core glass, indicates that devitrification may not be as serious a problem as originally feared. Furthermore, drawing conditions appear to be achievable which will permit the satisfactory production of clad phosphate laser rods from existing compositions as soon as high-purity material becomes available. The study on the compatibility of core and cladding glasses suggests additional compositions for core and cladding combinations which may show less tendency toward devitrification. A limited amount of additional effort will be expended in this direction. The prime emphasis of future effort will continue to be on the problem of melting high-purity phosphate glass materials.

REFERENCES

1. R. F. Woodcock, "Multiple Doped Erbium Laser Materials," Final Report, Contract DAAB07-70-C-0021, August 1970.

2. D. A. LaMarre and J. P. Segre, "Novel Erbium Q-Switched Laser," Proceedings of the Fourth DOD Conference on Laser Technology, p. 1221, 1970.