AD-755 541

AN INVESTIGATION OF SIGHT-LINE STABILIZATION

Edward J. Finck, et al

Iowa University

Prepared for:

Army Weapons Command

December 1972

DISTRIBUTED BY:

NTIS

National Technical Information Service
U. S. DEPARTMENT OF COMMERCE
5285 Port Royal Road, Springfield Va. 22151

AD755541

THE UNIVERSITY OF IOWA

Iowa City, Iowa

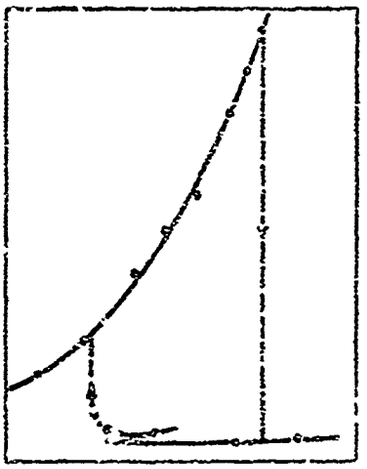

ADDC
FEB 16 1973
C

This document has been approved for public release and sale; its distribution is unlimited. The findings in this report are not to be construed as an official Department of the Army position, unless so designated by other authorized documents.

PROJECT THEMIS

Vibration and Stability of Military Vehicles

NATIONAL TECHNICAL
INFORMATION SERVICE

Report No. 45

AN INVESTIGATION OF SIGHT-LINE STABILIZATION

by

Edward J. Finck and George M. Lance

Department of Mechanical Engineering
The University of Iowa
Iowa City, Iowa

D D C
RECEIVED
FEB 16 1973
C

Project Themis - The University of Iowa
"Vibration and Stability of Military and
Other Complex Vehicular Systems"

Contract No. DAAF03-69-C-0014

December 1972

Unclassified
Security Classification

DOCUMENT CONTROL DATA - R & D

(Security classification of title, body of abstract and indexing annotation must be entered when the overall report is classified)

1. ORIGINATING ACTIVITY (Corporate author) University of Iowa	2a. REPORT SECURITY CLASSIFICATION Unclassified 2b. GROUP Na

3. REPORT TITLE

An Investigation of Sight-Line Stabilization

4. DESCRIPTIVE NOTES (Type of report and inclusive dates)

Technical Report

5. AUTHOR(S) (First name, middle initial, last name)

Edward J. Finck and George M. Lance

6. REPORT DATE December 1972	7a. TOTAL NO. OF PAGES ~~93~~ 95	7b. NO. OF REFS 10
8a. CONTRACT OR GRANT NO. b. PROJECT NO. DAAF03-69-C-~~1104~~ 0014 c. d.	9a. ORIGINATOR'S REPORT NUMBER(S) Report No. 45 9b. OTHER REPORT NO(S) (Any other numbers that may be assigned this report)	

10. DISTRIBUTION STATEMENT

Distribution of this report is unlimited.

11. SUPPLEMENTARY NOTES	12. SPONSORING MILITARY ACTIVITY U. S. Army Weapons Command

13. ABSTRACT

This paper presents the basic considerations behind sight-time stabilization. The equations of motion that relate the general pitch, toll and yaw motions of a vehicle hull to the traverse and elevation angles of a sight-line fixed to the hull are developed. A detailed mathematical model of a feedback control system that will accomplish sight-line stabilization is developed, and a numerical optimization is performed on a simplified version of this detailed model. The optimization routine used is described in reference [6].

DD FORM 1 NOV 65 1473 REPLACES DD FORM 1473, 1 JAN 64, WHICH IS OBSOLETE FOR ARMY USE.

Unclassified
Security Classification

14 KEY WORDS	LINK A ROLE	LINK A WT	LINK B ROLE	LINK B WT	LINK C ROLE	LINK C WT
feedback						
control						
system						
sight-line						
stabilization						
optimization						
model						
parameter						
numerical						

ib

ABSTRACT

This paper presents the basic considerations behind sight-time stabilization. The equations of motion that relate the general pitch, roll and yaw motions of a vehicle hull to the traverse and elevation angles of a sight-line fixed to the hull are developed. A detailed mathematical model of a feedback control system that will accomplish sight-line stabilization is developed, and a numerical optimization is performed on a simplified version of this detailed model. The optimization routine used is described in reference [6].

KEY WORDS

Feed back, control, system, sight-line, stabilization, optimization, model, parameter, numerical.

TABLE OF CONTENTS

	Page
List of Tables	iv
List of Figures	v - vi
List of Symbols	vii - viii
Chapters	
1. Introduction	1
2. Sight-Line Stabilization	4
3. System Concepts	12
4. Design	16
5. Simplified Version	41
6. Optimization	49
7. Discussion and Conclusions	59
Appendix	
A. System Output	62
Bibliography	84

LIST OF TABLES

Table	Page
1. List of Motor Variables	18
2. Definitions of Drive Variables	21
3. Load Variables	23
4. List of System Parameters	51
5. Initial Values of Parameters Used in Optimization	53
6. Optimal Parameters	53
7. Sensitivity Check	54-55
8. Output Variables	62

LIST OF FIGURES

Figure		Page
1.	Incorrect Gradient	2
2.	Stabilization Geometric Requirements	5
3.	Axes of Rotation	9
4.	Equivalent Base Motion Vectors	11
5.	Disturbed System	13
6.	Directed System	14
7.	Partial Block Diagram of Hydraulic Motor	17
8.	Drive Variables	20
9.	Motor and Load	24
10.	Block Diagram Manipulation to find ϕ/V_c	25
11.	Reduced Block Diagram for q Input Only	28
12.	Motor and Load for Inertial Inputs Only	31
13.	Velocity Loop	32
14.	Pole Zero Plot of Equation (33)	33
15.	Root Locus of Velocity Loop	34
16.	Position Loop	35
17.	Pole Zero Plot of ϕ/V_v	36
18.	Root Locus of Position Loop	38
19.	Final System	40
20.	Simplified Version of Motor Load Relation	44

Figure Page

21. Velocity Feedback 44

22. Position Feedback 45

23. Final Simplified Version of Figure 19 47

24. Frequency Response Magnitude Plot 56

25. Frequency Response Phase Plot 57

26. Transient Response 58

LIST OF SYMBOLS

Symbol

$\bar{e}_s$ --- sight-line unit vector

E --- elevation angle

T --- traverse angle

p --- pitch

r --- roll

q --- yaw

J_T --- traverse inertia

J_{EE} --- elevation inertia

J_{ET} --- component of elevation inertia in travse inertia

$\bar{\omega}$ --- base angular velocity

K_6 --- pressure feedback gain

G_6 --- pressure feedback transfer function

KP --- servo valve gain

GV --- servo valve transfer function

DM --- hydraulic motor average displacement

CP --- valve orfice damping coefficient

V_e --- effective volume of hydraulic under compression

β --- bulk modulus of hydraulic fluid

s --- Laplace transform variable

θ_m --- motor angle in radians (inertial component)

Symbol

τ_m --- motor torque

P_L --- pressure applied to motor input

Q_C --- compressibility flow

Q_D --- displacement flow through motor

Q_L --- total load flow through metering orfice

i --- input current to servo valve

V_c --- motor and valve configuration input current

M_T --- traverse drive motor

M_E --- elevation drive motor

R --- radius of J_T ring gear

r' --- radius of M_T pinion gear

θ_m' --- motor angle needed to compensate for q

ϕ --- inertial sight-line traverse angle

KL --- motor shaft compliance

J_m --- motor and gear inertia

N --- gear ratio

$\Delta\theta$ --- motor shaft twist angle

G_q --- q stabilizing transfer function

q_c --- input for q stabilization

θ_{ma} --- actual motor angle

CHAPTER 1

INTRODUCTION

The optimization of feedback control systems is a topic that has received much attention during recent years. Analytical techniques have been developed for a great variety of problems, but the application of these techniques to complex problems can become extremely difficult, if not impossible. This difficulty in applying analytical techniques has been one of the influential factors on the rise of numerical techniques for optimization.

Numerical techniques can be divided into two categories: direct search and indirect search. All indirect methods employ the use of the gradient of the performance surface in one manner or another. For systems with highly oscillatory or even discontinous performance surfaces, which are frequently encountered in the feedback control systems area, it is very easy to calculate an incorrect gradient, thus affecting the convergence of the optimization technique. An incorrect gradient is sh in fig. 1.

Because of the difficulty involved in calculating the gradient of the performance surface, direct methods are more suited to control optimization problems. There are many fine direct methods, among them are the method of Hook and Jeeves {4} and the method of Rosenbrock {9}. T. Lange-Nielsen {6} has modified Rosenbrock's

Figure 1

Incorrect Gradient

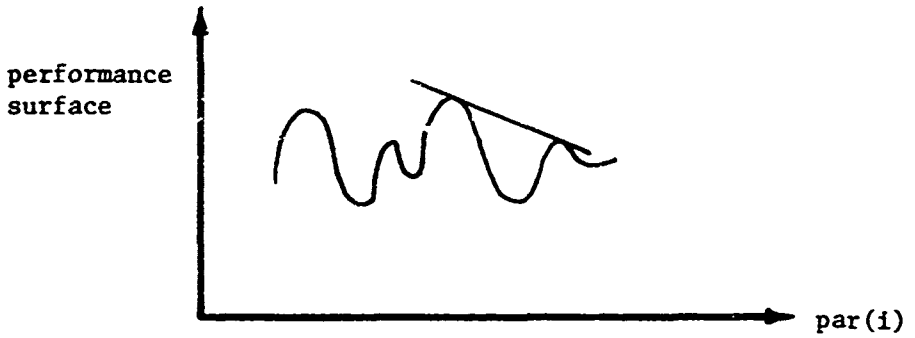

method and used it to develop an optimization algorithim using CSMP*.

Details of Rosenbrock's method and Lange'Nielsen's modifications can be found in reference [6].

When using a numerical optimization routine one must be careful to insure that the results are correct. In optimization the objective is to minimize a performance index while a system goes from one state to another. For a performance index such as the integral squared error (ISE) an analytical check can be made of the results by using tables {7} that express ISE in terms of known system quantities.

---

*Continuous Systems Modeling Program. An IBM analog simulation that uses digital methods. (see reference {5})

This is not to say that the system can be easily optimized by analytical methods if ISE is used. Another way to help guarantee that results are correct is to be familiar enough with the problem that is being optimized that you have some idea of what your results should be. It is for this reason that the material in chapters two, three and four is presented.

Care must be taken when synthesizing a mathematical model. An inaccurate model can cause all efforts to have been in vain, and the results will be useless. Automatic control problems include the dynamics of mechanical components as well as the characteristics of electrical and hydraulic components. Sight-line stabilization is a problem that requires some modeling in all three of these areas as well as a thorough understanding of kinematics, and of course control theory.

The problem of sight-line stabilization will be examined in chapters two, three and four; and a detailed mathematical model will be developed in chapter four. Sometimes concessions have to be made to factors over which there is no control. Computation time on a computer is one such factor. It is for this reason that a simplified version of the detailed model is used in the actual numerical optimization. This simplified model is developed in chapter five.

Chapter 2

SIGHT-LINE STABILIZATION

The concept behind sight-line stabilization is a simple one. Consider a sight-line unit vector, $\bar{e}_s$, (see fig. 2) directed from a point, O, to a point, P, with its base fixed at O. Point P is fixed in inertial space, and O is fixed to a base, B, as shown in fig. 2. The control variables are the traverse angle, T, and the elevation angle, E, defined as in fig. 2. The problem is to keep $\bar{e}_s$ oriented from O to P while the hull undergoes general pitch, roll, and yaw motion about the z, x, and y axes respectively. The notation will be to use p to denote pitch angle, r to denote roll angle, and q to denote yaw angle; with superscript dot denoting the familiar derivative with respect to time ($\dot{p}$, $\dot{r}$, and $\dot{q}$ are shown in fig. 2).

It is now desireable to derive an expression for T and E in terms of the known quantities. In the future it will be found that it is useful to do this in terms of the x-y-z reference frame previously defined. The sight-line unit vector, $\bar{e}_s$, can be written in terms of the x, y and z axis unit vectors; $\bar{i}$, $\bar{j}$, $\bar{k}$ respectively.

$$\bar{e}_s = \cos(E)\cos(T)\cdot\bar{i} + \sin(E)\cdot\bar{j} + \cos(E)\sin(T)\cdot\bar{k} \qquad (1)$$

The derivative of $\bar{e}_s$ in the inerti ˜ reference frame can be found by applying a general rule from vector calculus.

Figure 2

Stabilization Geometric Requirements

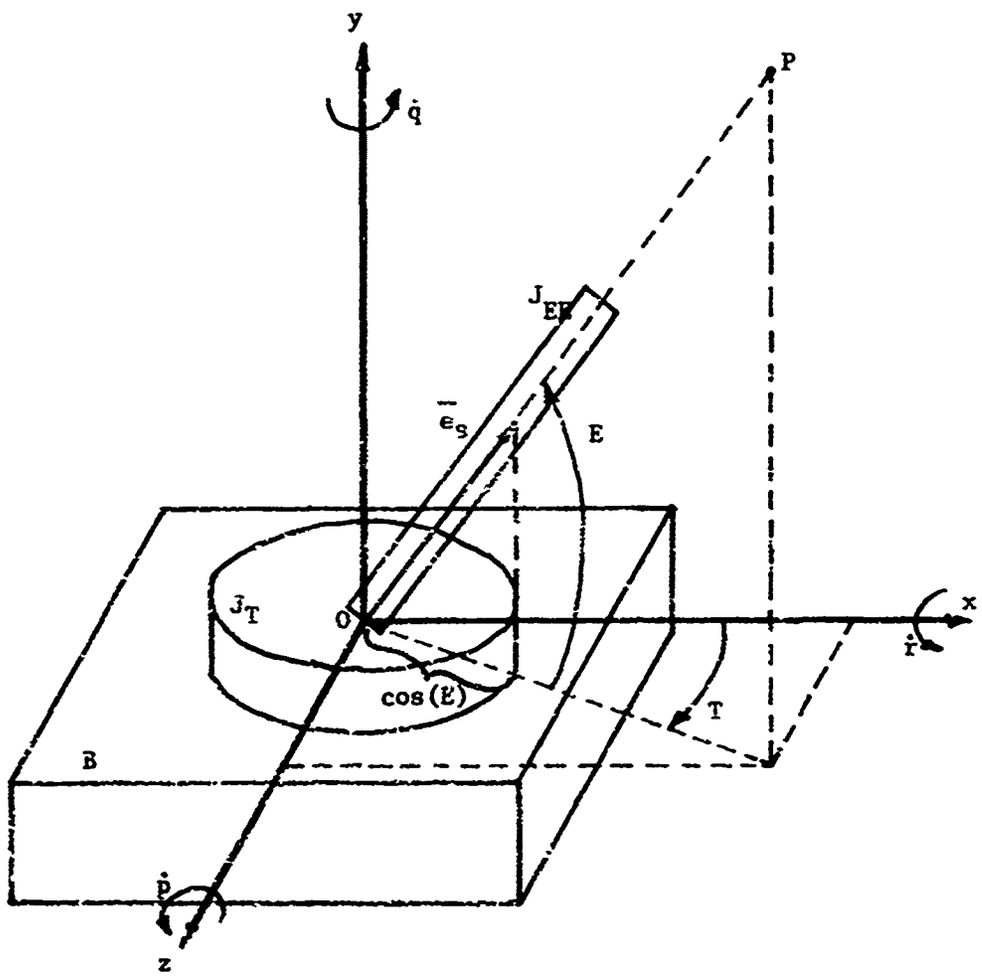

$$\frac{{}^{I}d}{dt}(\bar{e}_s) = \frac{{}^{B}d}{dt}(\bar{e}_s) + \bar{\omega} \times \bar{e}_s \tag{2}$$

The superscript I denotes the inertial reference frame, the superscript B denotes the base reference frame, and $\bar{\omega}$ is the general rotation vector for the base given by equation (3).

$$\bar{\omega} = \dot{r}\,\bar{i} + \dot{q}\,\bar{j} + \dot{p}\,\bar{k} \tag{3}$$

By expanding the expressions on the right of equation (2) equations (4) and (5) are obtained.

$$\begin{aligned}\bar{\omega} \times \bar{e}_s = {} & \{\ \dot{q}\cdot\cos(E)\sin(T) - \dot{p}\cdot\sin(E)\ \}\cdot\bar{i} + \\ & \{\ \dot{p}\cdot\cos(E)\cos(T) - \dot{r}\cdot\cos(E)\sin(T)\ \}\cdot\bar{j} + \\ & \{\ r\cdot\sin(E) - \dot{q}\cdot\cos(E)\cos(T)\ \}\cdot\bar{k}\end{aligned} \tag{4}$$

$$\begin{aligned}\frac{{}^{B}d}{dt}(\bar{e}_s) = {} & \{\ -\dot{T}\cdot\cos(E)\sin(T) - \dot{E}\cdot\sin(E)\cos(T)\ \}\cdot\bar{i} + \\ & \{\ \dot{E}\cdot\cos(E)\ \}\cdot\bar{j} + \\ & \{\ \dot{T}\cdot\cos(E)\cos(T) - \dot{E}\cdot\sin(E)\sin(T)\ \}\cdot\bar{k}\end{aligned} \tag{5}$$

The stabilization requirement is given by equation (6):

$$\frac{{}^{I}d}{dt}(\bar{e}_s) = 0 \tag{6}$$

Equation (2) therefore reduces to equation (7):

$$0 = \frac{{}^{B}d}{d\tau}(\bar{e}_s) + \bar{\omega} \times \bar{e}_s \tag{7}$$

By substituting equations (4) and (5) into equation (7) and noting that for a vector quantity to be zero each component must be zero, the following set of three scalar equations from the $\bar{i}$, $\bar{j}$ and $\bar{k}$ components respectively are obtained.

$$0 = -\dot{E}\cdot\cos(T)\sin(E) - \dot{T}\cdot\sin(T)\cos(E) - \dot{p}\cdot\sin(E) + \dot{q}\cdot\sin(T)\cos(E) \tag{8}$$

$$0 = \dot{E}\cdot\cos(E) + \dot{p}\cdot\cos(T)\cos(E) - \dot{r}\cdot\sin(T)\cos(E) \tag{9}$$

$$0 = -\dot{E}\cdot\sin(T)\sin(E) + \dot{T}\cdot\cos(T)\cos(E) + \dot{r}\cdot\sin(E) - \dot{q}\cdot\cos(T)\cos(E) \tag{10}$$

By solving equation (9) the expression for $\dot{E}$ is obtained.

$$\dot{E} = \dot{r}\cdot\sin(T) - \dot{p}\cdot\cos(T) \tag{11}$$

Substituting equation (11) into either equation (8) or equation (10) gives the expression for $\dot{T}$, equation (12):

$$\dot{T} = \dot{q} - \tan(E)\{\dot{r}\cdot\cos(T) + \dot{p}\cdot\sin(T)\} \tag{12}$$

Equations (11) and (12) are the governing equations of motion. Note that T and E are measured with respect to the base.

Now that the equations of motion for T and E are known it must be determined how T and E are to be controlled. Associated with the traverse axis there is an inertia, J_T, and with the elevation axis an inertia, J_{EE}. These are represented in fig. 3. J_T rotates with respect to the base around the previously defined y axis, and is thus measured with respect to the y axis. Define a new set of coordinates x_T, y_T, z_T, that are fixed to J_T such that y_T and z_T rotate with J_T. J_{EE} is confined to rotate about the z_T axis, and is thus measured with respect to the z_T axis. It is easy to see that part of J_{EE} will be included in J_T. This component is denoted by J_{ET}. J_{ET} is not fixed, but is a function of E. The movement of J_T through an angle T is accomplished by a motor, M_T, mounted on J_T parallel to the y axis as shown in fig. 3b. The torque is transferred through a gear ratio of N_T. Similarly J_E is driven by a motor, M_E, mounted on J_T parallel to the z_T axis with an associated gear ratio N_E.

It is desireable to return to the governing equations of motion and examine the significance of their terms more carefully. They are repeated below for convenience.

$$\dot{E} = \dot{r}\cdot\sin(T) - \dot{p}\cdot\cos(T) \tag{11}$$

Figure 3

Axes of Rotation

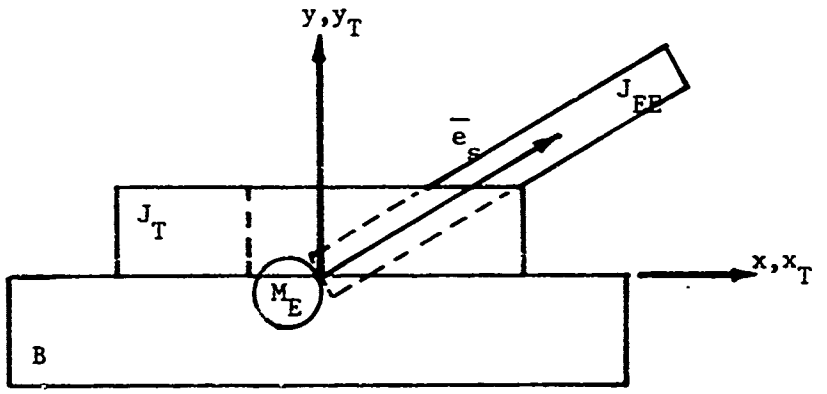

a) side view

b) top view

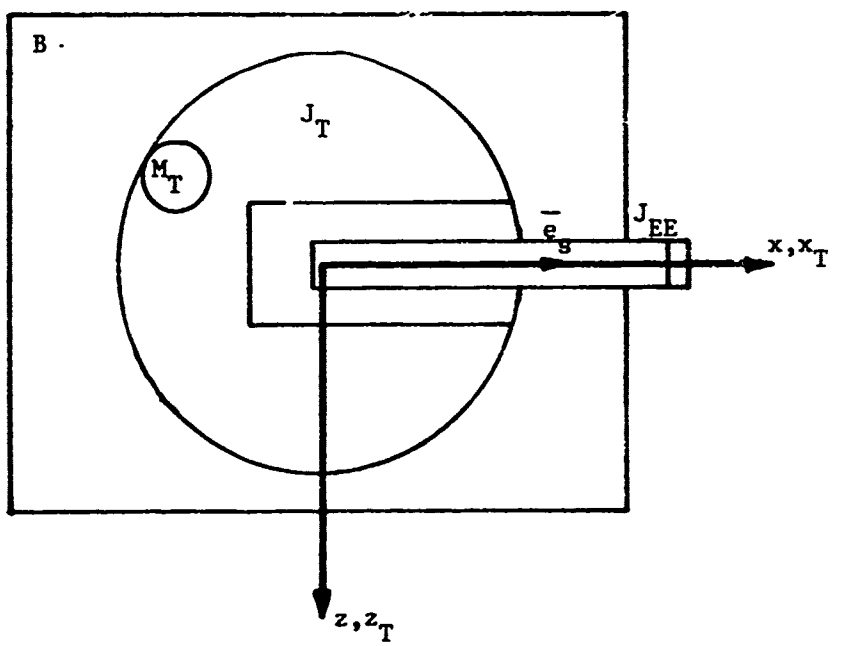

$$\dot{T} = \dot{q} - \tan(E)\{\dot{r}\cdot\cos(T) + \dot{p}\cdot\sin(T)\} \tag{12}$$

The pitch and roll velocity vectors can be resolved through the traverse angle T to form two new vectors, $\overline{\dot{r}\cdot\cos(T) + \dot{p}\cdot\sin(T)}$ and $\overline{\dot{p}\cdot\cos(T) - \dot{r}\cdot\sin(T)}$, which together with the original yaw vector, $\dot{q}$, form equivalent components of hull motion (see fig. 4). It is easy to see that $\overline{\dot{r}\cdot\cos(T) + \dot{p}\cdot\sin(T)}$ is in the previously defined x_T direction, and $\overline{\dot{p}\cdot\cos(T) - \dot{r}\cdot\sin(T)}$ is in the previously defined z_T direction. One of the stabilization requirements is to drive $\dot{E}$ about the z_T axis such that $\bar{e}_s$ remains oriented in inertial space. From equation (11) it is seen that $\dot{E}$ is simply the negative of the new equivalent vector, $\overline{\dot{p}\cdot\cos(T) - \dot{r}\cdot\sin(T)}$. Since this is always oriented parallel to the elevation drive axis there is no need to accelerate J_E inertially, but the only requirement is that $\dot{E}$ compensate for the hull motion. Torque is required only to accelerate motor and gear inertia and overcome friction. The traverse axis can be analyzed in a similar manner. The first term in equation (12) is $\dot{q}$. This is always oriented parallel to the traverse drive axis and thus requires no torque to accelerate J_T inertially. But the second term in equation (12), $\tan(E)\{\dot{r}\cdot\cos(T) - \dot{p}\cdot\sin(T)\}$, is oriented at a right angle to the traverse drive axis. This is the component of hull motion which requires torque to accelerate J_T inertially. It is extremely important that these torque requirements in terms of hull motion be clearly understood. For if they are not, one could end up designing a control system that would have the

Figure 4

Equivalent Base Motion Vectors

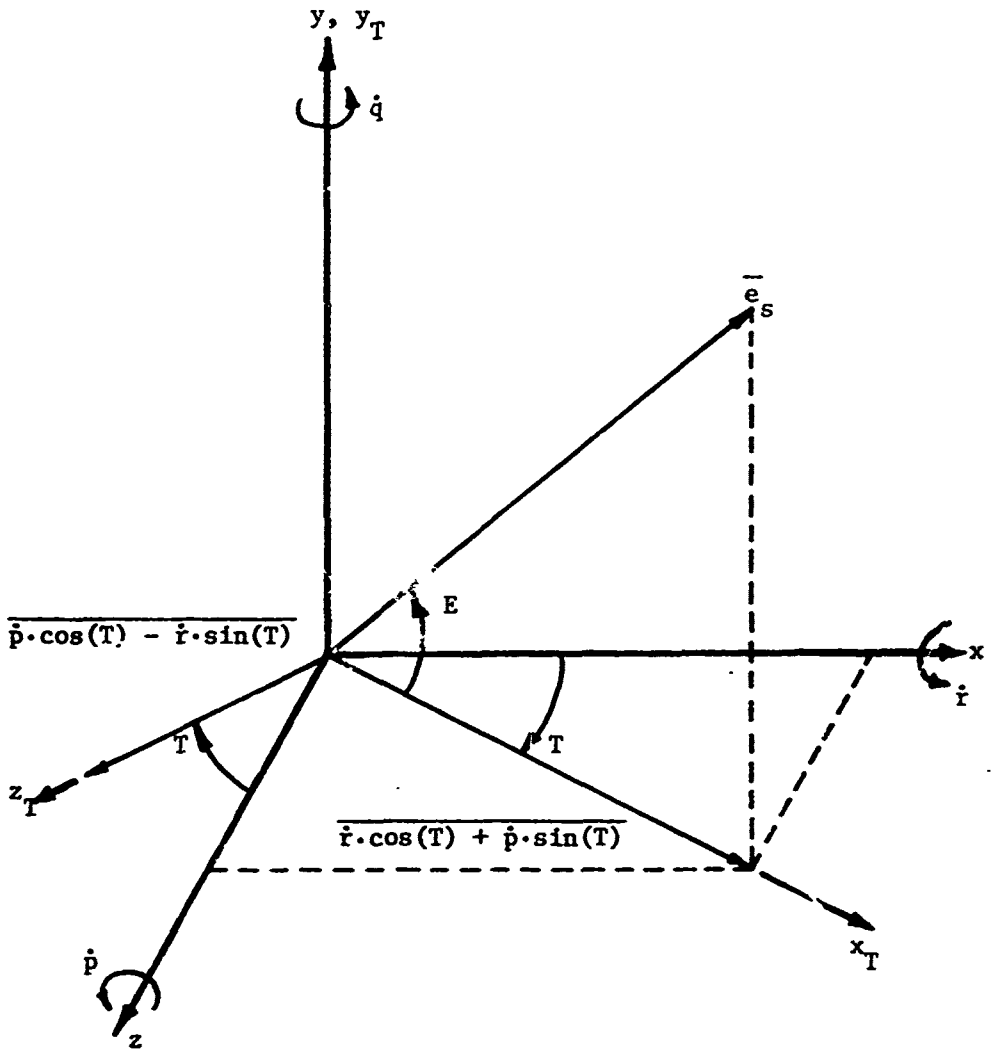

function of moving the hull with respect to the sight-line vector.

Let us now proceed to the considerations of the actual control system.

CHAPTER 3

SYSTEM CONCEPTS

The traverse axis only will be considered from here on. This can be done because the two axes are operated independently. All the assumptions and conclusions that follow can be easily extended to the elevation axis.

Because of space limitation and the extremely large traverse inertia, the size of the motor that can be used to drive the traverse inertia is very small, in a maximum torque output sense, in comparison to the size of the traverse inertia. This causes the system to be sluggish when compared to the high speed servo mechanisms that are familiar to control engineers. This inherent sluggishness is the biggest obstacle that must be overcome.

There are two basic approaches to sight-line stabilization. One method is the familiar matching of an output to a command input. The other method matches the output of an auxilliary high speed sight servo to the command input, and then uses the output of the sight servo as the input to the sight-line stabilization system. The reason for this will be explained later.

The familiar matching of input to output is known as the disturbed method. In this method the traverse component of the sight-line is fixed to the traverse inertia, J_T (see fig. 5).

Figure 5

Disturbed System

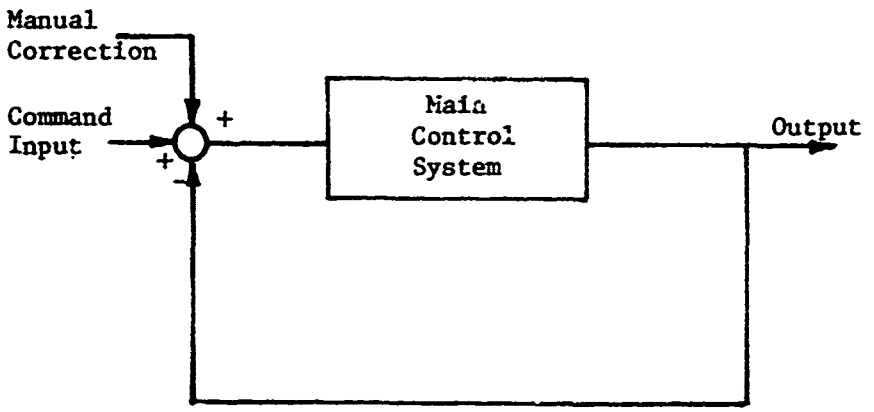

The main control system consists of the traverse load inertia, the traverse drive motor, the other related components and the necessary dynamic relationships. Because the main control system is inherently sluggish there is a tendency for the operator to apply manual correction to help speed up the system. This can have a very negative effect on the overall performance of the system.

The second method of sight-line stabilization is the directed-line method. In this method the sight-line is fixed to an auxiliary sight inertia which is very small when compared to J_T. Because the sight inertia is small it can be driven at relatively high speeds. The command input is applied to this high speed sight servo and matched to its output. The output of the sight servo is then used as the input to the main control system, and the output of the main

control system is matched to the output of the sight servo (see fig. 6).

Figure 6

Directed System

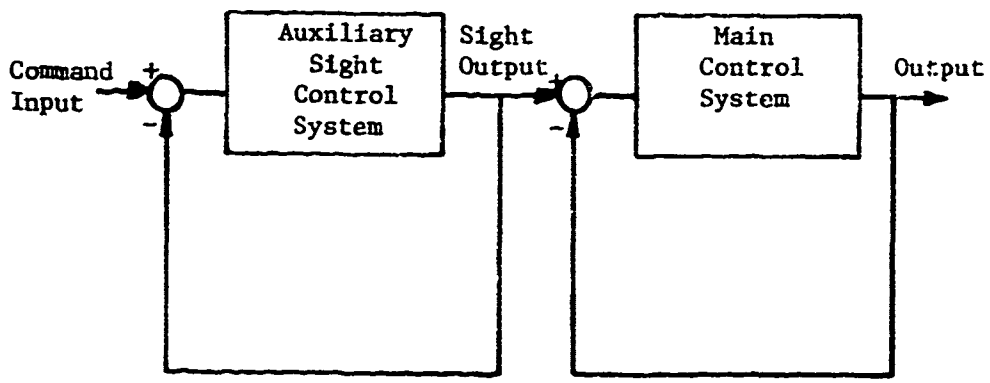

This has the effect of matching the command input to the main control system output, but it does so in two stages. Because the command input is matched to the output of a relatively high speed system, the tendency to apply manual correction is eliminated.

There is no conclusive evidence as to which of the two previously discussed methods is more effective, although the bulk of the work that has been done is on the directed method. The attention here will be focused on the disturbed method because it is the simpler of the two methods, and yet it still includes all the basic considerations of the dynamics necessary for a sight-line

stabilization system. The simplicity also cuts down on the computation time that is required for the numerical optimization which will be used later on.

CHAPTER 4

DESIGN

For a system that is to be optimized, the system need not be designed to meet certain performance specifications (i.e. rise time, overshoot, settling time, bandwidth) as is the usual case. This is possible because when the system is optimized all the parameters will be adjusted to satisfy the given performance index. This performance index may include the classic time response characteristics or may be completely void of them. Whatever the case, the time response will be shaped during the optimization along with the frequency response. The objective will therefore be to design a system that is a reasonable starting point for the optimization routine. A reasonable system for a starting point can be defined as a system that does not have anything critically wrong with it, such as being unstable. The root locus method of synthesis lends itself very well to the design of a system with such loose specifications, and is therefore what will be used. It causes very little difficulty to keep an approximate range for a bandwidth in mind when using the root locus technique. The objective will be to design the system for the optimization starting point to have a bandwidth of approximately 300 radians per second. This value was obtained as a typical one from the literature, however it is by no means a value that should be used for all stabilization systems.

A hydraulic motor is used to drive the traverse inertia because more torque can be obtained from a hydraulic motor than can be obtained from an electric motor of the same physical size A partial block diagram of a typical constant displacement piston type hydraulic motor and its control valve is shown in fig 7. A list of the variables and a set of numerical values (where applicable) is given in table 1.

Figure 7

Partial Block Diagram of Hydraulic Motor

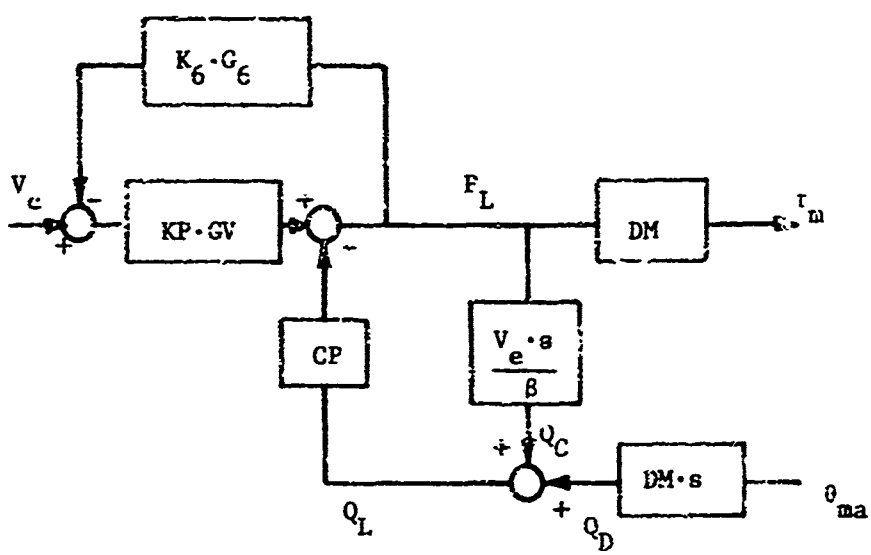

Table 1

List of Motor Variables

KP - servo valve gain	15,000 psi/ma
K_6 - pressure feedback gain	.002 ma/psi
GV - servo valve transfer function	$1/\{s^2/1200^2 + 1.4 \cdot s/1200 + 1\}$
G_6 - pressure feedback compensation	$s/\{(s/20 + 1) \cdot (s/.5 + 1)\}$
DM - motor displacement	0.016 in^3/rad
CP - valve orfice damping coefficient	6,200 lb/sec/in^5
β - bulk modulus of fluid	300,000 psi
V_e - effective volume of fluid under compression	1 in^3
θ_{ma} - actual motor angle in radians	
τ_m - motor torque in in-lbs	
P_L - pressure applied to motor in psi	
Q_c - compressibility flow in in^3/sec	
Q_D - displacement flow through motor in in^3/sec	
Q_L - total load flow through metering orfice in in^3/sec	
i - input current to servo valve in ma	
V_c - motor and valve configuration input current in ma	

CP is actually a nonlinear term which depends on the flow rate, Q_L. The value given for CP is for the small signal region. The valve input current will saturate at some value, typically 10 ma. The maximum supply pressure also has a limiting value with 3,000 psi being representative for the type of system being considered. The pressure saturation will be the limiting factor in the performance of the system. The maximum pressure of 3,000 psi and the motor displacement of .016 in^3/rad combine to provide a maximum torque of 48 in-lb (=3,000 psi x .016 in^3) which will be very small for the size of load inertia being dealt with. A detailed development of a block diagram similar to fig. 7 can be found in reference {8}.

To complete the block diagram of fig. 7 it must be determined in what manner the torque, τ_m, drives the load. Consider the expanded partial view of fig. 3b in fig. 8. The definitions of the variables shown in fig. 8 are given in table 2.

Figure 8

Drive Variables

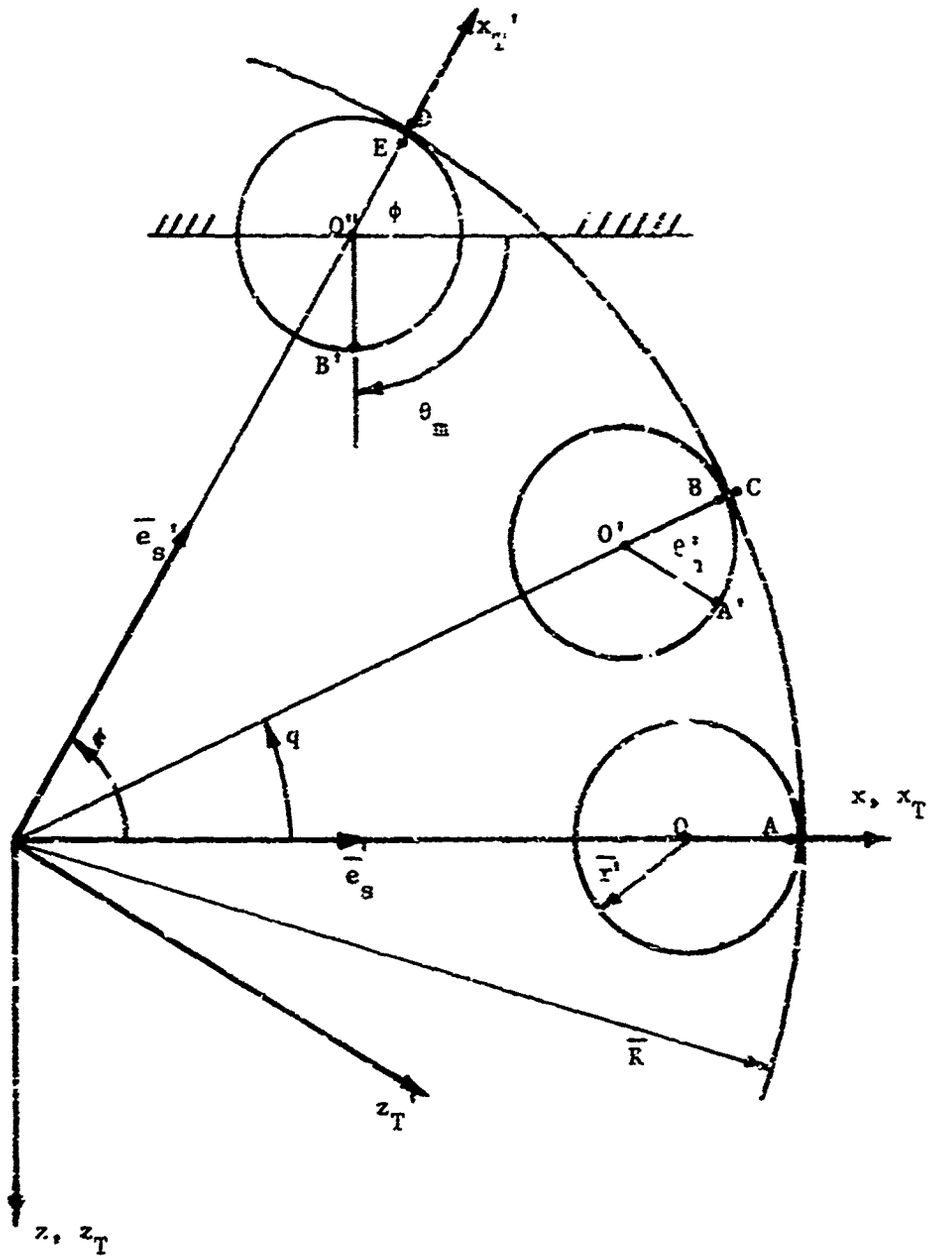

Table 2

Definitions of Drive Variables

q - previously defined base yaw angle

R - radius of J_T ring gear

r' - radius of M_T pinion gear

ϕ - inertial sight-line traverse angle

θ_m' - motor angle needed to compensate for q

θ_m - component of motor angle that is required to inertially drive sight-line through angle $(\phi-q)$

0 - original pinion center

$0'$ - pinion center position due to q input

$0''$ - final inertial pinion center

When the base undergoes a yaw angle of q the motor must accelerate the motor and gear inertias through an angle of θ_m', and overcome friction to keep $\bar{e}_s$ oriented along the x axis as is required for sight-line stabilization. Geometrically this means that points A and A' must remain coincident. The two variables, q and θ_m', are related by equation (13).

$$R \cdot q = r' \cdot \theta_m' \tag{13}$$

When it is required to move the sight-line from its initial orientation, $\bar{e}_s$, to another one, $\bar{e}_s'$, the motor must accelerate

J_T as well as the motor and gear inertias. J_T must traverse an angle ϕ while the pinion turns through an angle θ_m. ϕ and θ_m are related by equation (14). For this case points A and B coincide.

$$r' \cdot \theta_m = (R-r') \cdot \phi \tag{14}$$

When both q and ϕ occur simultaneously J_T need only be driven inertially through an angle that is the difference between ϕ and q. Roll without slip conditions require that the arc length from point C to point D be the same as the arc length from point E to point B', where B and B' are coincident initially. This relationship can be expressed by equation (15).

$$R \cdot (\phi - q) = r' \cdot (\phi + \theta_m) \tag{15}$$

Equation (15) can be rewritten in the form of equation (16).

$$r' \theta_m = (R-r') \cdot \phi - R \cdot q \tag{16}$$

It is worth noting that equation (16) becomes equation (14) when there is no q input. The gear ratio, N, is defined by equation (17).

$$N = R/r' \tag{17}$$

Using this relationship equation (16) can be rewritten as:

$$\theta_m = (N-1)\cdot\phi - N\cdot q = N\cdot\{(N-1)\cdot\phi/N - q\} \tag{18}$$

Associated with the motor shaft is a compliance, KL. If friction is neglected, the motor torque serves to accelerate the motor and gear inertia, J_m, and twist the shaft. The angle of twist is the difference between the actual motor shaft angle, θ_{ma}, and the angle that is predicted by equation (18). The motor torque is given by the following expression.

$$\tau_m = J_m\cdot s^2\cdot\theta_{ma} + KL\cdot\{\theta_{ma} - N\cdot(\{N-1\}\cdot\phi/N - q)\} \tag{19}$$

By using the relationship in equation (19) and the block diagram in fig. 7, the block diagram of fig. 9 can be obtained. Typical values of the quantities introduced in fig. 9 are given in table 3 below.

Table 3

Load Variables

KL - motor shaft compliance	600 in-lb/rad
J_m - motor and gear inertia	0.00158 in-lb-sec^2
J_T - traverse load inertia	1.44(10^4) in-lb-sec^2
N - gear ratio	1000
$\Delta\theta$ - motor shaft twist angle	

The compressibility flow, Q_C, is very small in comparison to the displacement flow through the motor, and can for all practical purposes be neglected.

Assuming q equal to zero, the transfer function from V_c to ϕ can be readily found following a series of block diagram manipulations (see fig. 10), and is given by equation (20).

Figure 9

Motor and Load

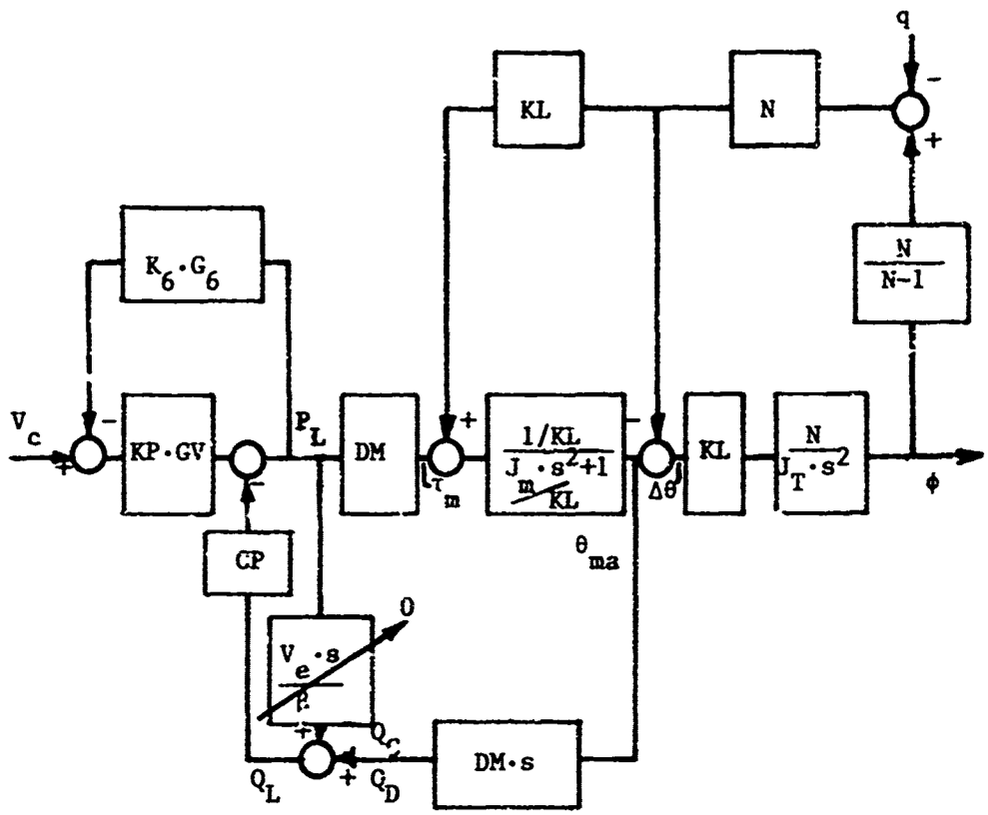

Figure 10

Block Diagram Manipulation to find ϕ/V_c

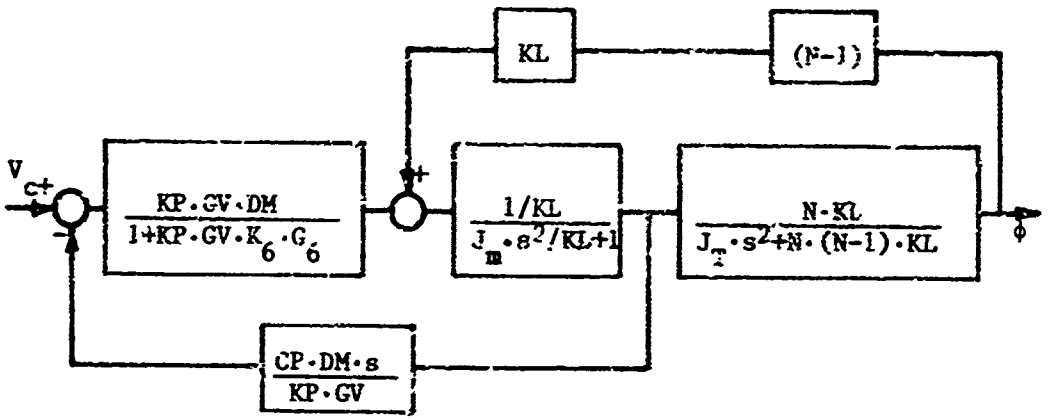

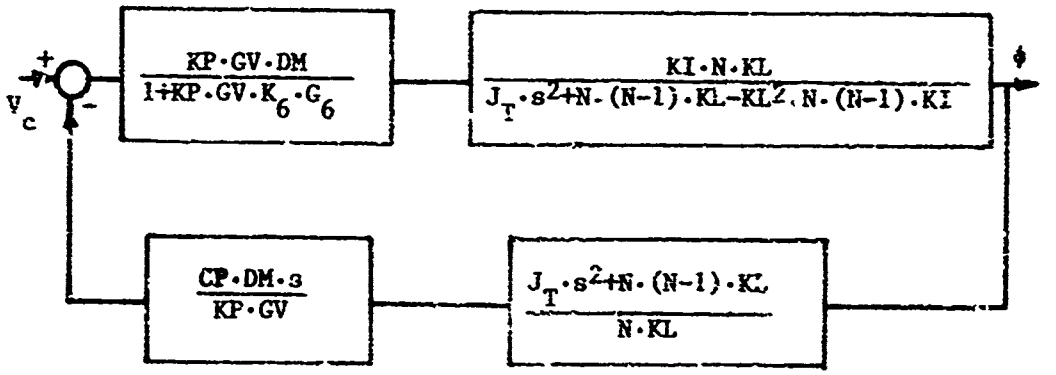

$$\frac{\phi}{V_c} = \frac{KP \cdot GV \cdot DM \cdot KI \cdot N \cdot KL}{\left[\begin{array}{l}(1+KP \cdot GV \cdot K_6 \cdot G_6) \cdot (J_T \cdot s^2 + N \cdot \{N-1\} \cdot KL - KL^2 \cdot N \cdot \{N-1\} \cdot KI) + \\ DM^2 \cdot KI \cdot CP \cdot s \cdot (J_T \cdot s^2 + N \cdot \{N-1\} \cdot KL)\end{array}\right]} \tag{20}$$

where:

$$KI = \frac{1/KL}{J_m \cdot s^2/KL + 1}. \tag{21}$$

By substituting the appropriate numerical values which were given previously, the transfer function of equation (22) is obtained.

$$\frac{\phi}{V_c} = \frac{9.12 \cdot (10^{12}) \cdot (s+20) \cdot (s+.5)}{\left[\begin{array}{l}s \cdot (s+.54) \cdot (s+4.37) \cdot (s+1284.58) \cdot (s^2+2\{.21\}370s+370^2) \cdot \\ (s^2+2 \cdot \{.52\} \cdot 1200 \cdot s+1200^2)\end{array}\right]} \tag{22}$$

The last term in the denominator of equation (22) will have a flat frequency response out to approximately 1200 rad/sec , and its time response is very fast when compared to the other terms. For all pratical purposes it can be normalized and set equal to unity since it will have little effect on either the frequency response or the time response. Dividing the numerator and denominator of equation (22) by 1200^2 and assuming that the dynamic effects of $(s^2/1200^2 + 2 \cdot \{.52\} \cdot s/1200 + 1)$ are negligible, equation (22) can be simplified to equation (23).

$$\frac{\phi}{V_c} = \frac{6.34\cdot(10^6)\cdot(s+20)\cdot(s+.5)}{s\cdot(s+.54)\cdot(s+4.37)\cdot(s+1284.58)\cdot(s^2+2\{.21\}370s+370^2)} \tag{23}$$

Consider the transfer function of the servo valve.

$$GV = \frac{1}{s^2/1200^2 + 2\cdot(.7)\cdot s/1200 + 1} \tag{24}$$

This resembles very closely the term that has just been neglected. If GV is set equal to unity when substituting the numerical values into equation (20), the following revised transfer function for ϕ/V_c is obtained.

$$\frac{\phi}{V_c} = \frac{6.34\cdot(10^6)\cdot(s+20)\cdot(s+.5)}{s\cdot(s+.55)\cdot(s+4.37)\cdot(s+1060.5)\cdot(s^2+2\{.31\}406s+406^2)} \tag{25}$$

This is in very good agreement with equation (23), and therefore GV will be assumed to be unity. There is no way to readily eliminate the term $1/(s + 1060.5)$ in equation (25) by a block diagram alteration. It must therefore be tolerated.

Since ϕ is defined to be the inertial component of traverse motion it should be zero for a yaw, q, input which is the non-inertial component of traverse motion. This is the same as requiring that $\Delta\theta$ be zero for a q input (see fig. 9). Assuming that ϕ does equal zero, and setting V_c equal to zero yields the simplified block diagram in fig. 11 for q inputs only. The validity of assuming that ϕ and V_c equal zero will be seen later on. G_q and

q_c will be determined.

Figure 11

Reduced Block Diagram for q Input Only

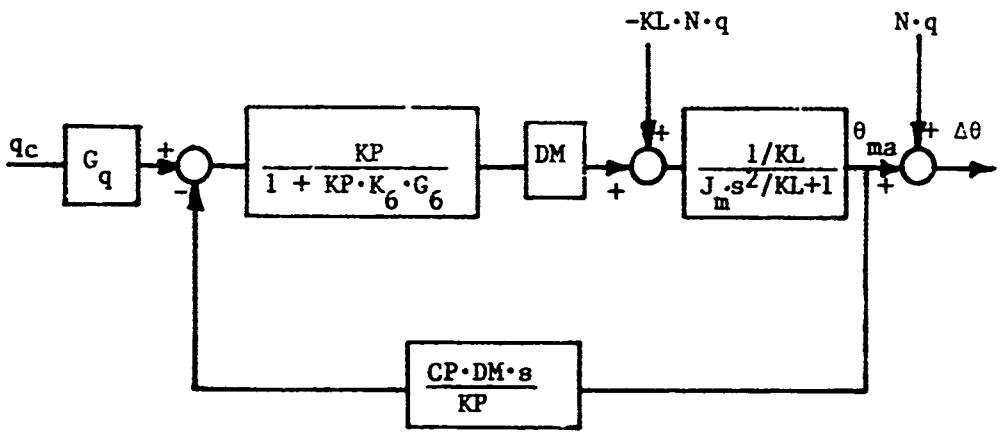

The requirement that $\Delta\theta$ equal zero implies that:

$$\theta_{ma} = -N \cdot q \tag{26}$$

Assuming that $q_c = 0$ the transfer function from $-KL \cdot N \cdot q$ to θ_{ma} is given by (27).

$$\frac{\theta_{ma}}{-KL \cdot N \cdot q} = \frac{1/KL \cdot (1 + KP \cdot K_6 \cdot G_6)}{(J_m \cdot s^2/KL + 1) \cdot (1 + KP \cdot K_6 \cdot C_6) + CP \cdot DM^2 \cdot s/KL} \tag{27}$$

Equation (27) can be rewritten as equation (28).

$$\frac{\theta_{ma}}{-N \cdot q} = T_1 = \frac{(1 + KP \cdot K_6 \cdot G_6)}{(J_m \cdot s^2/KL + 1) \cdot (1 + KP \cdot K_6 \cdot G_6) + CP \cdot DM^2 \cdot s/KL} \tag{28}$$

Assuming that $-KL \cdot N \cdot q$ is zero, the transfer function from $q_c \cdot G_q$ to θ_{ma} is given by (29).

$$\frac{\theta_{ma}}{q_c \cdot G_q} = T_2 = \frac{KP \cdot DM/KL}{(J_m \cdot s^2/KL + 1) \cdot (1 + KP \cdot K_6 \cdot G_6) + CP \cdot DM^2 \cdot s/KL} \tag{29}$$

By letting $q_c = -N \cdot q$, it is seen that for θ_{ma} to be equal to $-N \cdot q$ all that need be required is that:

$$T_1 + T_2 \cdot G_q = 1 \tag{30}$$

Substituting equations (28) and (29) into (30) yields the expression for G_q.

$$G_q = \frac{-J_m \cdot s^2 \cdot (1 + KP \cdot K_6 \cdot G_6) - CP \cdot DM^2 \cdot s}{KP \cdot DM} \tag{31}$$

Substituting the appropriate numerical values into (31) yields equation (32).

$$G_q = \frac{-60 \cdot s^2 \cdot (s/.031 + 1) \cdot (s/320.5 + 1)}{(s/20 + 1) \cdot (s/.5 + 1)} \tag{32}$$

Thus if an input, $- N \cdot q$, is applied through a transfer function, G_q, and the output is applied to the stabilization system as shown in fig. 11; there will be no motion of ϕ for a yaw input.

The design of the hardware to provide a transfer function for G_q is a difficult if not impossible task. The best that can be hoped for is a good approximation, but it is not the purpose of this writing to design hardware. The purpose is to show the necessary mathematical relationships for sight-line stabilization.

Yaw inputs have a negligible effect on the performance of a sight-line stabilization system when compared to the inertial inputs. Therefore further efforts will be concentrated on the inertial inputs only.

Consider again fig. 9 with the two q inputs and the compressibility term removed, and GV set equal to unity. It is repeated below as fig. 12 for convenience. The transfer function for fig. 12 was given by equation (25) which is also repeated below as equation (33).

$$\frac{\phi}{V_c} = \frac{6.34 \cdot (10^6) \cdot (s + 20) \cdot (s + .5)}{s(s + .55)(s + 4.37)(s + 1060.5)(s^2 + 2(.31)406 \cdot s + 406^2)} \tag{33}$$

Figure 12

Motor and Load for Inertial Inputs Only

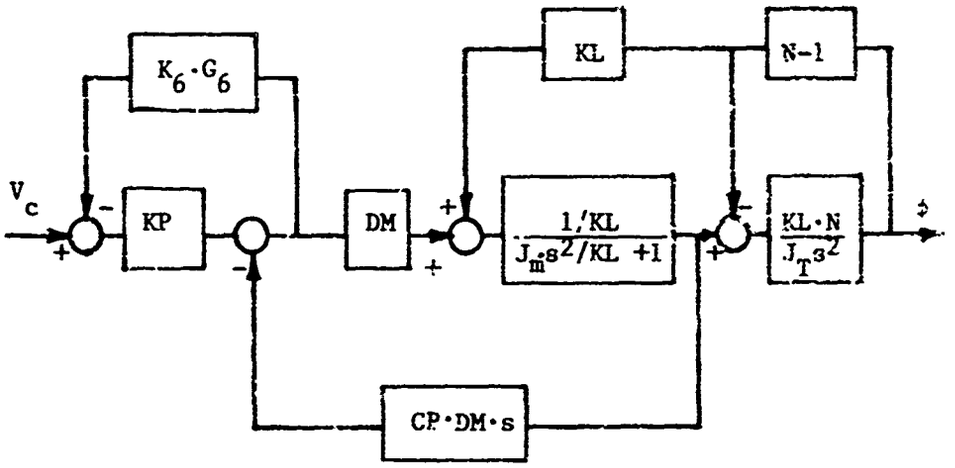

Velocity feedback will be seen to enhance the performance and stability of the system for reasons that will become obvious later. By placing a velocity loop around ϕ/V_c and adding series compensation, the block diagram of fig. 13 is obtained. Since ϕ is an inertial angle its time derivative must be measured by a rate gyroscope. The general form for the transfer function of a rate gyro is given by equation (34).

$$T_{RG} = \frac{K \cdot s}{s^2/\omega^2 + 2\zeta s/\omega + 1} \tag{34}$$

Figure 13

Velocity Loop

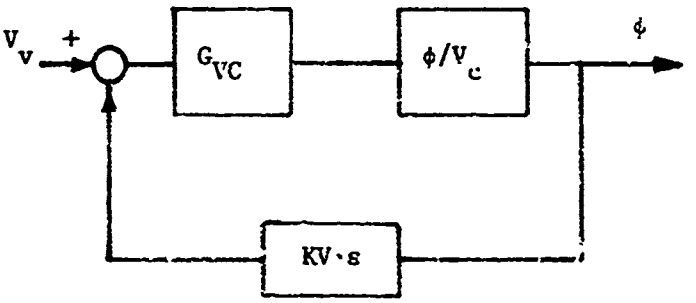

There are a number of rate gyros available that have a natural frequency much larger than 300 rad/sec. For a rate gyro of this type, the output will be approximately proportional to the rate only.

$$T_{RG} = K \cdot s \quad \text{ma-sec/rad} \tag{35}$$

Similarly for a position gyro with the same restrictions on natural frequency, its transfer function can be approximated by a simple gain.

$$T_{PG} = \frac{K}{s^2/\omega^2 + 2\zeta s/\omega + 1} = K \quad \text{ma/rad} \tag{36}$$

It must now be determined what KV and G_{VC} should be. A pole zero plot for equation (33) is given in fig. 14. The scale has been expanded in the region near the origin in order that the smaller terms

can be shown.

Figure 14

Pole Zero Plot of Equation (33)

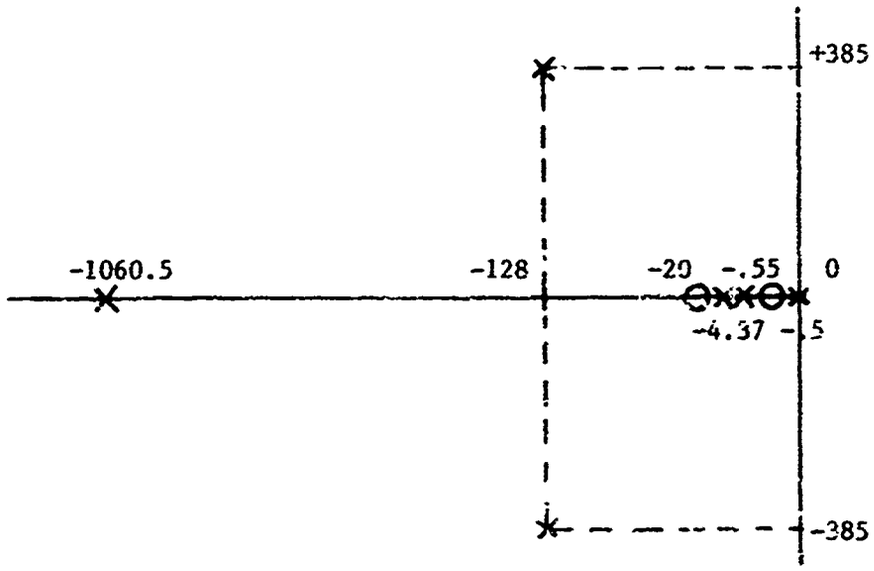

Somewhat arbitrarily it will be assumed that KV is unity. It should be remembered that this is only a starting value for optimization. It is easy to see from fig. 14 that the five poles and zeroes near the origin will dominate the time response. When plotting the root locus for fig. 13 the velocity feedback will cancel out the pole at the origin, and the pole at 0.55 can be assumed to cancel with the zero at 0.5. It is reasonable to assume that G_{VC} contain a term $(s + 4.37)/(s + 20)$ for cancellation. If this and a gain were all that were included in G_{VC}, then the root locus would tend

to the right half plane, and there would be little room for the bandwidth of the system to be increased without lowering the damping ratio of the complex pole pair. By introducing two lead networks of the form (s + 150)/(s + 2000) the root locus will take the form of fig. 15.

Figure 15

Root Locus of Velocity Loop

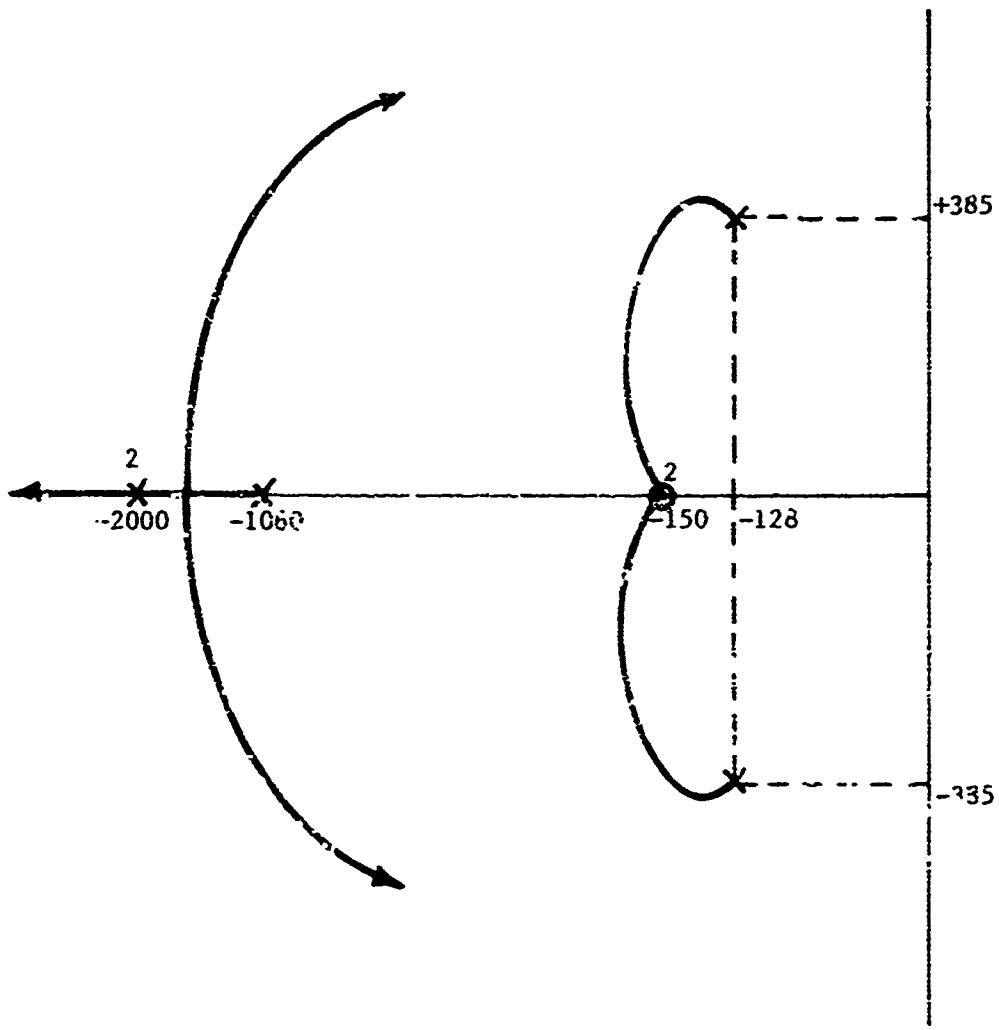

For a compensator gain, VK, of 800, ϕ/V_v will be given by equation (37).

$$\frac{\phi}{V_v} = \frac{5.2\cdot(10^9)\cdot(s + 150)^2}{\left[\begin{array}{l} s\cdot(s + 3453)\cdot(s + 181 + j\cdot 238)\cdot(s + 181 - j\cdot 238)\cdot \\ (s + 749 + j\cdot 1439)\cdot(s + 749 - j\cdot 1439) \end{array}\right]} \tag{37}$$

Therefore it is reasonable to let:

$$G_{VC} = 800\cdot \frac{(s + 4.37)\cdot(s + 150)^2}{(s + 20)\cdot(s + 2000)^2} \tag{38}$$

as a starting value.

The next step is to determine the series compensation for the position loop (see fig. 16).

Figure 16

Position Loop

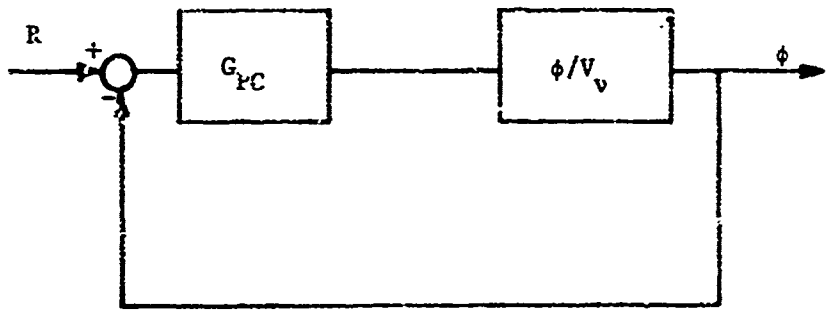

A pole zero plot of equation (37) is given in fig. 17.

Figure 17

Pole Zero Plot of ϕ/V_v

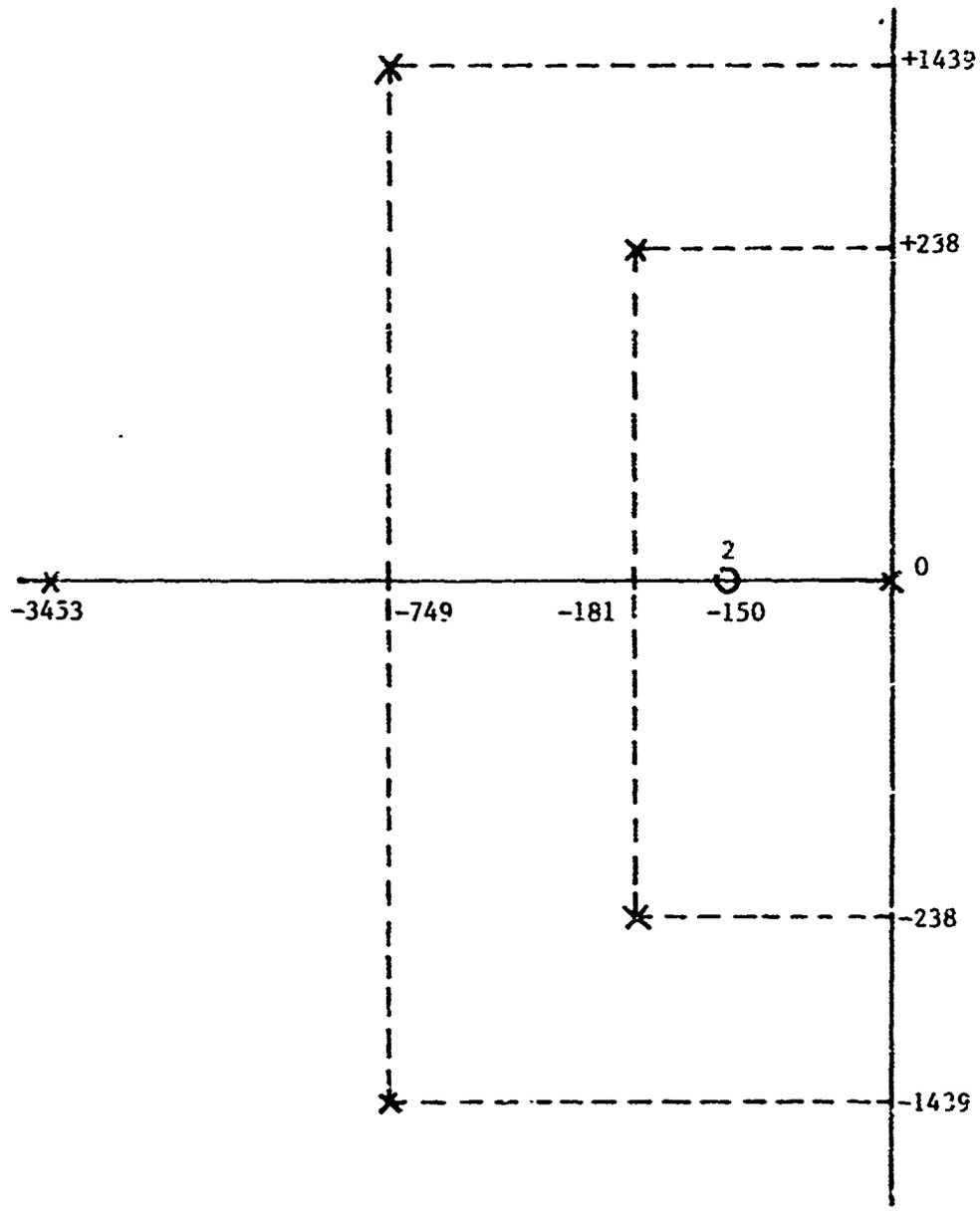

The first thing to note is that the two zeros at 150 are too small if the frequency response is to be flat out to approximately 300 rad/sec. Also a closed loop pole will fall someplace between 0 and 150. Therefore the two zeroes must be increased in magnitude to help draw the root locus to the left. After some trial and error, 700 was chosen to be a suitable value for the zeroes. Thus G_{PC} will contain two lag networks of the form $(s + 700)/(s + 150)$. If these two lag networks and a gain, PK, were all that were contained in G_{PC}, the root locus of fig. 16 would tend to the right half plane from the smaller complex pole pair, and there would be little room for the damping ratio to decrease during optimization, if desired. This can be averted by introducing a lead network such as $(s + 700)/(s + 3000)$ into G_{PC}. A root locus for the position loop with the previously discussed compensation is given in fig. 18. For a position compensator gain, PK, of 1200, ϕ/R will be given by equation (39).

$$\frac{\phi}{R} = \frac{6.23\cdot(10^{12})\cdot(s + 700)^3}{\left\{\begin{array}{l}(s + 297)\cdot(s + 145 + j\cdot 540)\cdot(s + 145 - j\cdot 540)\cdot \\ (s + 3303 + j\cdot 584)\cdot(s + 3303 - j\cdot 584)\cdot \\ (s + 559 + j\cdot 1314)\cdot(s + 559 - j\cdot 1314)\end{array}\right\}} \tag{39}$$

Therefore it can be assumed that a reasonable starting value of G_{PC} is given by equation (40).

$$G_{PC} = 1200\cdot\frac{(s + 700)^3}{(s + 150)^2\cdot(s + 3000)} \tag{40}$$

Figure 18

Root Locus of Position Loop

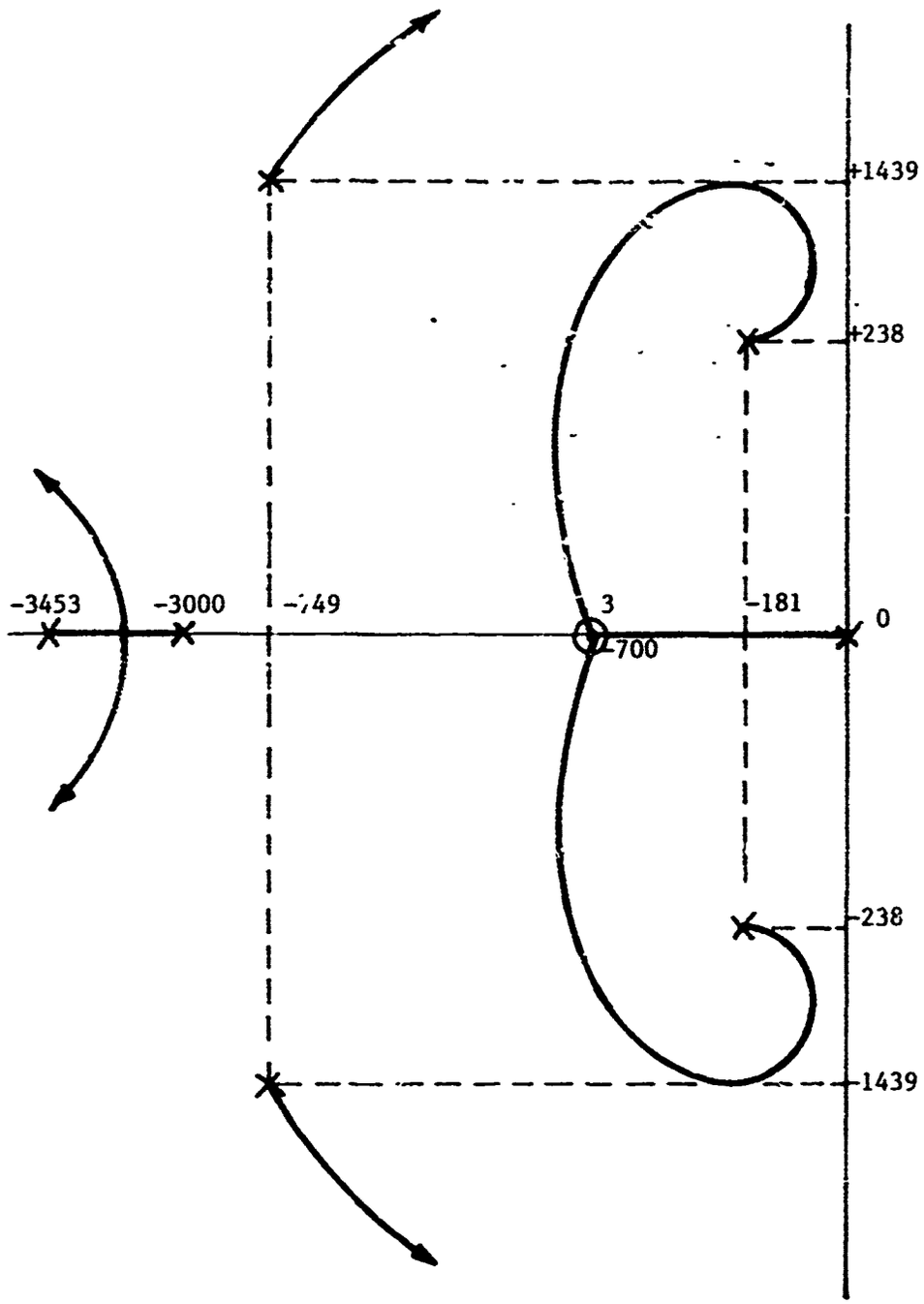

The transfer function ϕ/R satisfies the 300 rad/sec bandwidth requirement, and the smallest damping ratio present is the 0.26 associated with the complex pair $(s + 145 + j\cdot 540)\cdot(s + 145 - j\cdot 540)$. Although a damping ratio of 0.26 gives approximately 45% overshoot the system will have nowhere near this amount of overshoot due to the pressure saturation previously discussed, nor will the system be anywhere near as fast as the denominator of equation (39) might indicate. The whole sight-line stabilization system is shown in fig. 19. It includes inertial inputs, R, as well as the non-inertial input q. This is not the final system, but only a starting point for the optimization.

It can be seen that for a q input only, R will be equal to zero. ϕ depends only on what is between it and the input to the system, in this case the only input is q. Since G_q was designed to cause ϕ to be zero for q inputs, there will be no position feedback from ϕ. Therefore V_c will equal zero, and it is seen that the assumptions made earlier in regard to V_c and q, when designing G_q, were valid.

Although a strict linear analysis was used throughout this chapter, and there was no non-linear check on the stability of the system due to the pressure saturation; it is belived that there will be no problem with stability. This is because of the limiting value on the torque of the system.

Figure 19

Final System

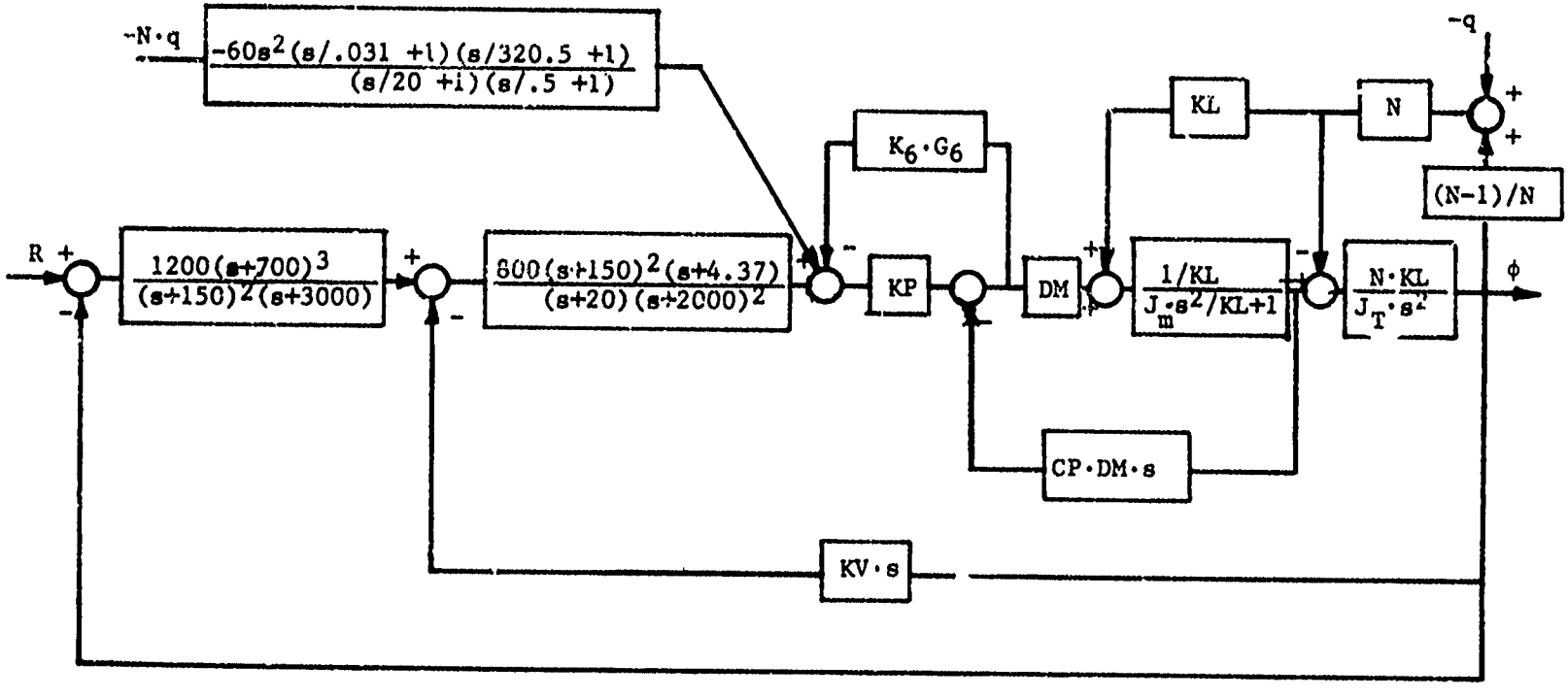

CHAPTER 5

SIMPLIFIED VERSION

Numerical computation time can be a prohibitive factor when optimizing a system, as is the case for the system of chapter 4. It is the objective of this chapter to develop a simplified model that will reduce the amount of computation time required for optimization.

An examination of fig. 19 reveals an undamped second order term in the expression for the motor load. This expression is given below.

$$\frac{1/KL}{J_m \cdot s^2/KL + 1} \tag{41}$$

Multiplying the numerator and denominator of this expression by KL/J_m, and substituting the numerical values given yields (42).

$$\frac{632.9}{s^2 + 616.2^2} \tag{42}$$

The numerical optimization routine that will be used later requires that the differential equations of the system be integrated repeatedly. When numerically integrating an expression with a natural frequency as high as the one in (42) a large amount of compute time is required because the integration interval has to be

made very small in order to achieve reasonable accuracy. For all practical purposes the term $J_m \cdot s^2/KL$ can be assumed to be negligible, and expression (41) can be approximated by 1/KL. This alleviates the need to integrate expression (41), however there are other expressions that also must be dealt with in order to reduce computation time for the whole system.

Again referring to fig. 19 if the loop containing the terms N, N-1 and $N \cdot KL/(J_T \cdot s^2)$ is collapsed, the following expression can be readily obtained:

$$\frac{N \cdot KL/J_T}{s^2 + N \cdot (N-1) \cdot KL/J_T} \tag{43}$$

By substituting the appropriate numerical values into (43), expression (44) is obtained.

$$\frac{41.66}{s^2 + 209^2} \tag{44}$$

This term also requires a very small integration interval in order to achieve reasonable accuracy.

Expression (43) arises out of the dynamical considerations for motor shaft compliance. If it is assumed that the motor shaft is rigid, then it is easy to see that:

$$\phi = \frac{\theta_m}{N-1} \tag{45}$$

Neglecting friction, the motor torque serves to accelerate the motor and gear inertia through the angle θ_m, and the traverse inertia (divided by the gear ratio) through an angle ϕ. This relation is expressed in equation (46).

$$\tau_m = J_m \cdot s^2 \cdot \theta_m + J_T \cdot s^2 \cdot \phi / N \tag{46}$$

If equation (45) is substituted into equation (46), and N-1 is assumed to be approximated by N, equation (47) is obtained.

$$\tau_m = (J_m + J_T/N^2) \cdot s^2 \cdot \theta_m \tag{47}$$

Combining equation (47) with the block diagram in fig. 7 and neglecting compressibility flow and GV as was done earlier, the block diagram in fig. 20 is obtained where:

$$J_L = J_T/N + J_m \cdot N \tag{48}$$

By using the block diagram in fig. 20 and substituting in the proper numerical values, the expression for ϕ/V_c is obtained.

$$\frac{\phi}{V_c} = \frac{15.02 \cdot (s + 20) \cdot (s + .5)}{s(s + .55) \cdot (s + 4.38) \cdot (s + 414.90)} \tag{49}$$

Figure 20

Simplified Version of Motor Load Relation

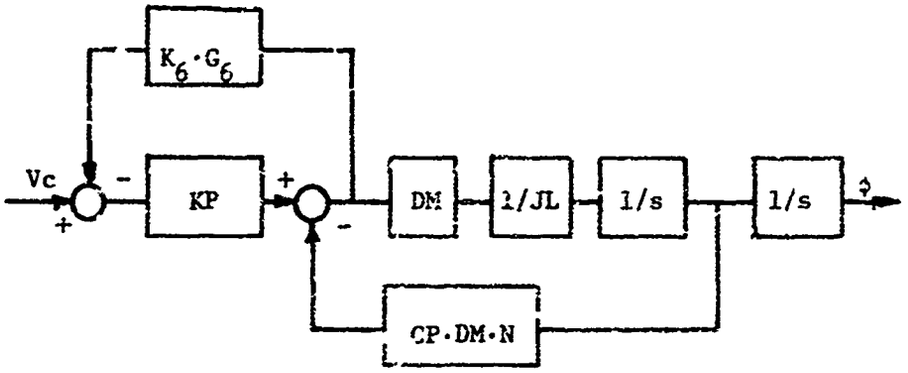

Following the same procedure as was used for the development of the model in chapter 4, the next step is to add velocity feedback. This is represented in fig. 21.

Figure 21

Velocity Feedback

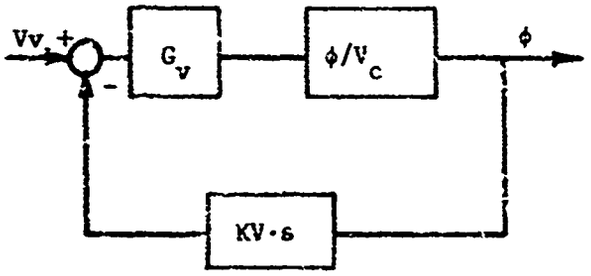

Let K_v be unity, and let G_v be used for the cancellation of the smaller terms in equation (49). G_V is then expressed as (50).

$$G_v = \frac{VK\cdot(s + .55)\cdot(s + 4.38)}{(s + .5)\cdot(s + 20)} \tag{50}$$

VK is a variable gain to be determined. The pole at .55 and the zero at .5 were assumed not to cancel because the pole at .55 was found to be somewhat sensitive to changes in the other parameters when some preliminary programs of the system were run. By using equation (50) the transfer function for ϕ/V_v is found to be:

$$\frac{\phi}{V_v} = \frac{VK\cdot 15.02}{s(s + 414.90 + VK\cdot 15.02)} \tag{51}$$

Consider ϕ/V_v with position feedback as is shown in fig. 22.

Figure 22

Position Feedback

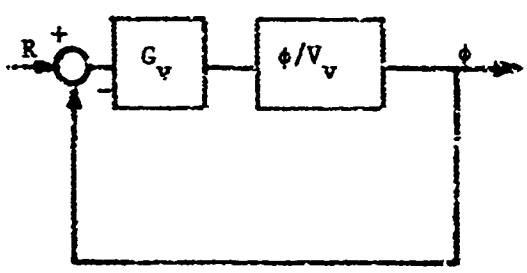

Let C_v be simply a gain, PK. Then the transfer function for fig.22 is given by equation (52).

$$\frac{\phi}{R} = \frac{PK \cdot VK \cdot 15.02}{s^2 + (414.90 + VK \cdot 15.02) \cdot s + PK \cdot VK \cdot 15.02} \tag{52}$$

The expression 414.9 + VK·15.02 will correspond to the $2\zeta\omega$ term of a quadratic. Remembering that a bandwidth of approximately 300 is desired, ω can be chosen so as to satisfy this requirement. Let ω be 315, also let ζ be unity for an initial value. By substituting these values in equation (52), VK is found to be 14.32 and PK is found to be 461.29.

Fig 23 is then the final simplified configuration for a system to be used as a starting point for optimization. This system is for inertial inputs only, i.e. R is the inertial component only. The yaw inputs, q, were ignored altogether because in this simplified version they are trivial.

Figure 23

Final Simplified Version of Figure 19

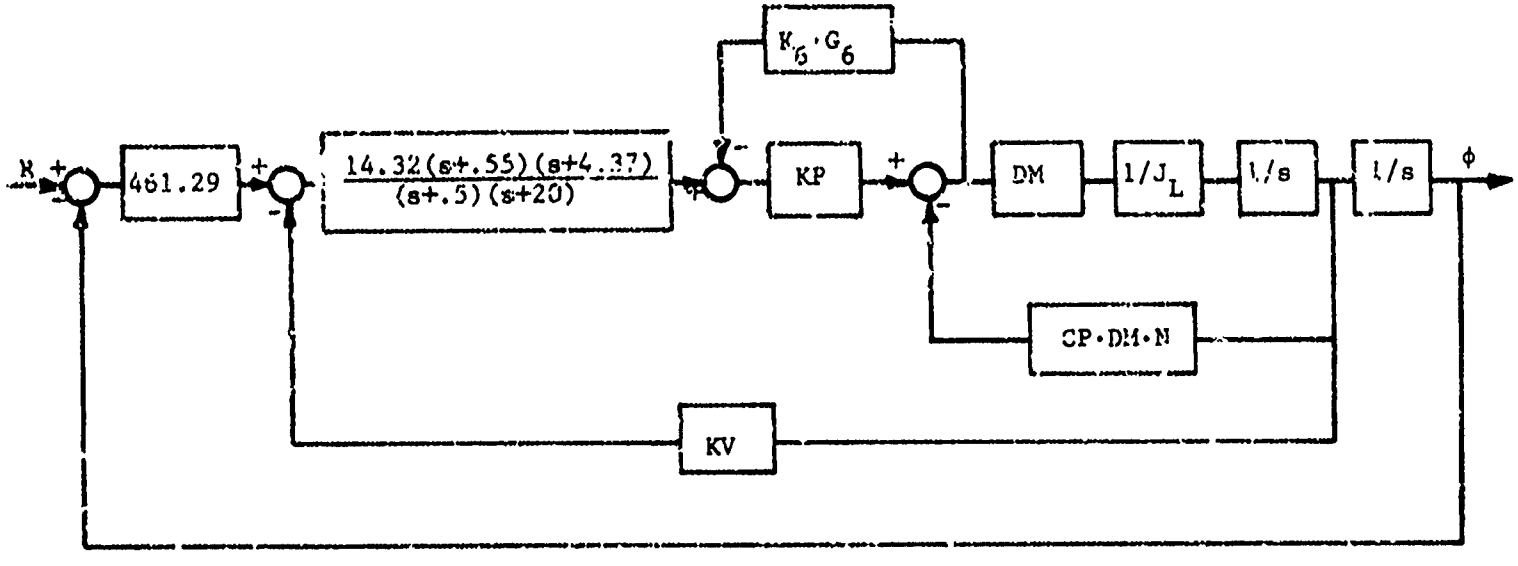

A reasonable question to ask is: How good is the approximation of the detailed model that is given by the simplified model in chapter 5? The answer to this question can be found by running the model of chapter 4 with a very large number inserted for KL. This approximates the case of a rigid motor shaft. However if equation (43) is considered it can be seen that as KL is increased so is the natural frequency of the undamped second order term, and this causes the computation time for the solution of the system equations to go up. An attempt was made to run the system with a very large value for KL(10^8), but the amount of computation time required for this was prohibitive. However, the simplified system is thought to give a good approximation to the detailed version because the transient response of the simplified system (see appendix A and Fig. 26) is on the order of the transient responses encountered in the literature.

CHAPTER 6

OPTIMIZATION

The term optimization is an abstract one to say the least. There are many different definitions of optimization. Basically to optimize a system means to minimize a performance index (cost index) while the system goes from one state to another. This performance index is a function of the parameters of the system. The system parameters include all the physical variables of the system (gains, compensator values, inertias, etc.); and, in the strictest sense, the input. The input will not be assumed to be a parameter here. This corresponds to an input over which there is no control, a case that is not uncommon in the control system area.

There are many forms for the performance index. Integral forms are a very popular type. Among the integral forms is the integral squared error (ISE). If a system goes from one state at time t_1 to another state at time t_2, then the ISE is given by equation (53), where R is the input to the system and C is the output of the system.

$$ISE = \int_{t_1}^{t_2} (R-C)^2 dt \tag{53}$$

With the use of Parceval's theorem {7} and tables {7}, the ISE can be computed with some ease when $t_1 = 0$ and $t_2 = \infty$. This is not to

say that a minimum ISE is easily obtained analytically.

Numerical optimization routines have gained in popularity because of the difficulty in applying analytical techniques in optimization. The key to a numerical technique is the method used to vary the system parameters in the search for the optimum solution. There are two classes of search techniques: indirect search and direct search. All indirect search methods employ the use of the gradient of the performance surface in one manner or another. Highly oscillatory or even discontinous performance surfaces are very common in the control system area. This highly oscillatory nature can cause a gradient to be calculated incorrectly, thus affecting the optimization. For this reason direct search methods are more suited to optimal control problems.

There are many fine direct search techniques. Among them are the methods of Hook and Jeeves {4} and the method of Rosenbrock {9}. Lange-Nielsen {6} has modified Rosenbrock's method and used it to develop an optimization program. A detailed description of Rosenbrock's method and Lange-Nielsen's modifications can be found in reference [6]. A step by step implementation of Lange-Nielsen's program can also be found in reference [6].

Lange-Nielsen's program will be used to optimize the sight-line stabilization system of chapter 5 using ISE as the performance index. In Lange-Nielsen's program the system parameters are perturbed using the modified version of Rosenbrock's method, and after each pertubation the system differential equations are solved using CSMP {5}.

The performance index is calculated, and the procedure is repeated until convergence is assured. The reader is referred to reference [10] for a verification of the accuracy of Lange-Nielsen's program.

Before the actual optimization can take place, the parameters that are to be varied must be decided upon. The procedure that will be used here will be one of elimination of inappropriate parameters.

Consider figure 23. Let the zeroes of the compensator be known as ZL1 and ZL2, and let the poles be known as PL1 and PL2. Also let the poles of G_6 be called P1 and P2. All the system parameters can now be listed in table 4.

Table 4

List of System Parameters

PK	PL2	DM
VK	KP	CP
ZL1	K6	N
ZL2	P1	J_T
PL1	P2	J_m

It is intuitively obvious that J_m and J_T will tend to their lower limits, and DM will tend to its upper limit. If the expression for J_L is considered, it can be seen that N will tend to a very large number in order to minimize J_L. It can therefore be assumed that the behavior of these four parameters during optimization is known, and that the values given have already been extended to their

limits. CP is a small signal value for a nonlinear term, and therefore to use it as a parameter would have little meaning. P1 and P2 are part of the pressure feedback transfer function, G_6. It is not always possible to order hardware that has the exact physical characteristics that are wanted. This may be the case with P1 and P2, therefore they will also be deleted as parameters. PL1 and PL2 are seen to cancel P1 and P2 directly, and since P1 and P2 are deleted as parameters, PL1 and PL2 will also be deleted. KP and K_6 are part of the servo valve pressure feedback configuration. But since they are gains it will be assumed that they can be altered without much trouble. Some preliminary runs of the program have shown that KV remains approximately equal to unity. KV will therefore be left fixed at one. There are no foreseen reasons for not using the remaining variables, therefore the variables to be used in the optimization are KP, PK, VK, K_6, ZL1 and ZL2. In order that the compensator be put in proper form for CSMP, VK must be modified as follows:

$$VK = 14.32 \cdot PL1 \cdot PL2/ZL1/ZL2 \tag{54}$$

The parameters are listed below in table 5 along with their starting numerical values for convenience.

Everything is now ready for the actual optimization, which is done with the use of the optimization program developed by T. Lange-Nielsen [10]as previously mentioned. The optimal parameters

are listed below in table 6 for several magnitudes of step inputs along with the percent overshoot of the system and the optimal value of ISE. The step magnitudes are representative of those encountered in pratice. The changes in percent overshoot are due to the non-linearity. A sensitivity check of the system with the 0.1 step is given in table 7.

Table 5

Initial Values of Parameters Used in Optimization

KP = 15000 psi/ma	K_6 = 0.002 ma/psi
PK = 461.29	ZL1 = 0.55
VK = 3.43	ZL2 = 4.36

Table 6

Optimal Parameters

Step Magnitude	0.05	0.10	0.15	0.20
KP	29231.1	22468.1	13355.1	29170.8
K_6	.0018154	.0025239	.0006002	.0033426
PK	540.687	463.931	435.085	400.212
VK	3.60303	4.14173	2.93995	2.97975
ZL1	.548911	.512743	.497890	.547466
ZL2	9.05973	6.06801	5.74567	4.39803
P.O.	28.2	5.87	5.63	-------
ISE	2.4763E-4	1.3941E-3	3.8416E-3	8.0115E-3

Table 7

Sensitivity Check

Parameter	% Perturbation	ISE	P.O.
KP	+10	1 3945E-3	7.41
	-10	1.3941E-3	5.59
	+20	1.3945E-3	7.48
	-20	1.3945E-3	4.22
K_6	+10	1.3941E-3	5.59
	-10	1.3945E-3	7.48
	+20	1.3946E-3	4.05
	-20	1.3945E-3	7.48
PK	+10	1.3945E-3	7.48
	-10	1.3948E-3	3.73
	+20	1.3945E-3	7.48
	-20	1.3948E-3	3.73
VK	+10	1.3945E-3	7.48
	-10	1.3945E-3	4.14
	+20	1.3945E-3	7.48
	-20	1.3948E-3	3.73
ZL1	+10	1.4043E-3	13.24
	-10	1.4041E-3	———
	+20	1.4285E-3	19.15
	-20	1.4314E-3	———

Table 7

(Continued)

Parameter	% Perturbation	ISE	P.O.
ZL2	+10	1.3950E-3	7.48
	-10	1.3951E-3	3.73
	+20	1.3957E-3	7.48
	-20	1.3959E-3	3.73

The frequency response of the system that had the 0.1 step as the system input is found in figures 24 and 25, and the transient response of the same system is found in figure 26 and appendix A. A discussion of all the results obtained in this chapter and the conclusions that can be drawn from these results is found in chapter 7.

Figure 24

Frequency Response Magnitude Plot

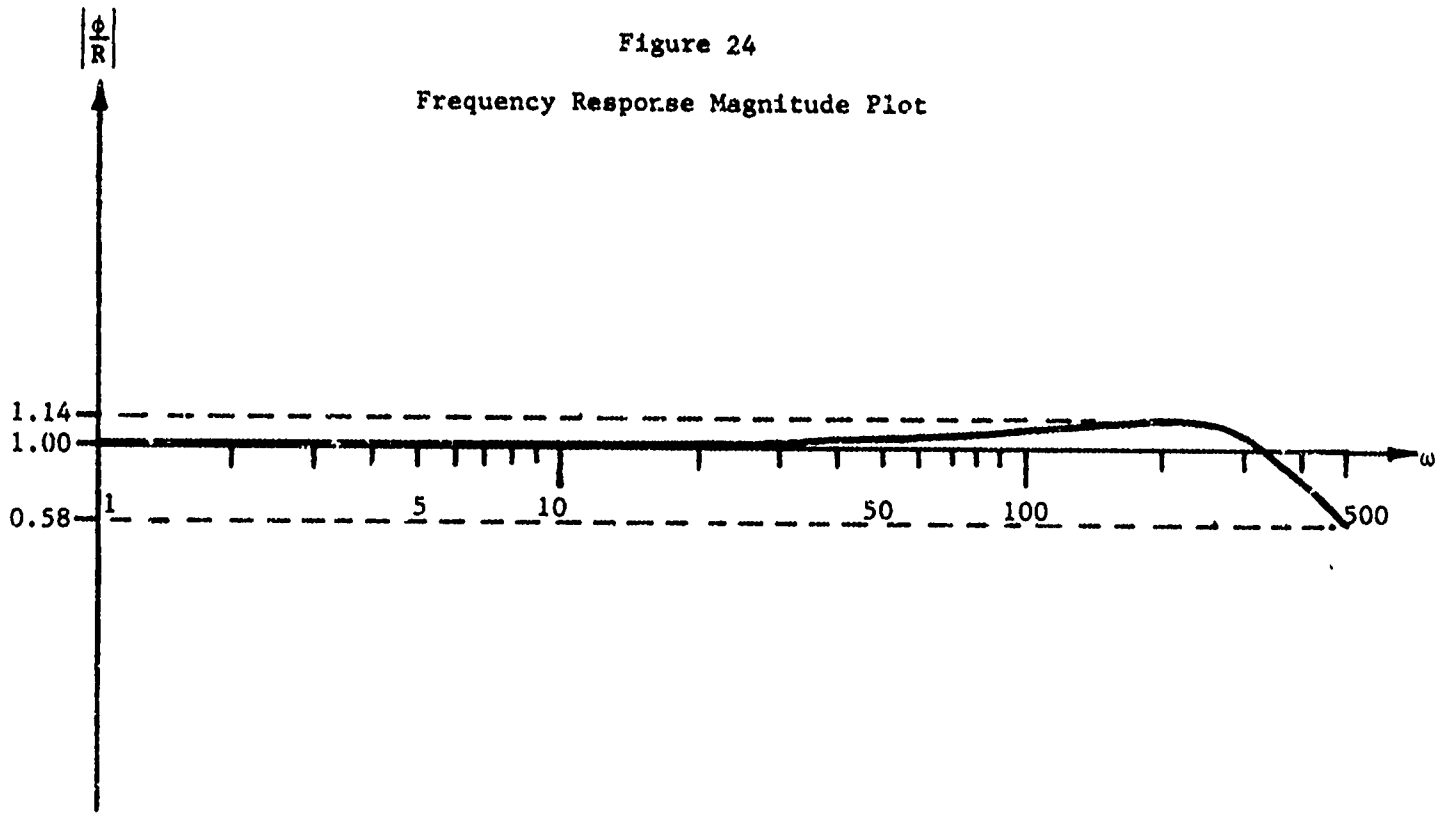

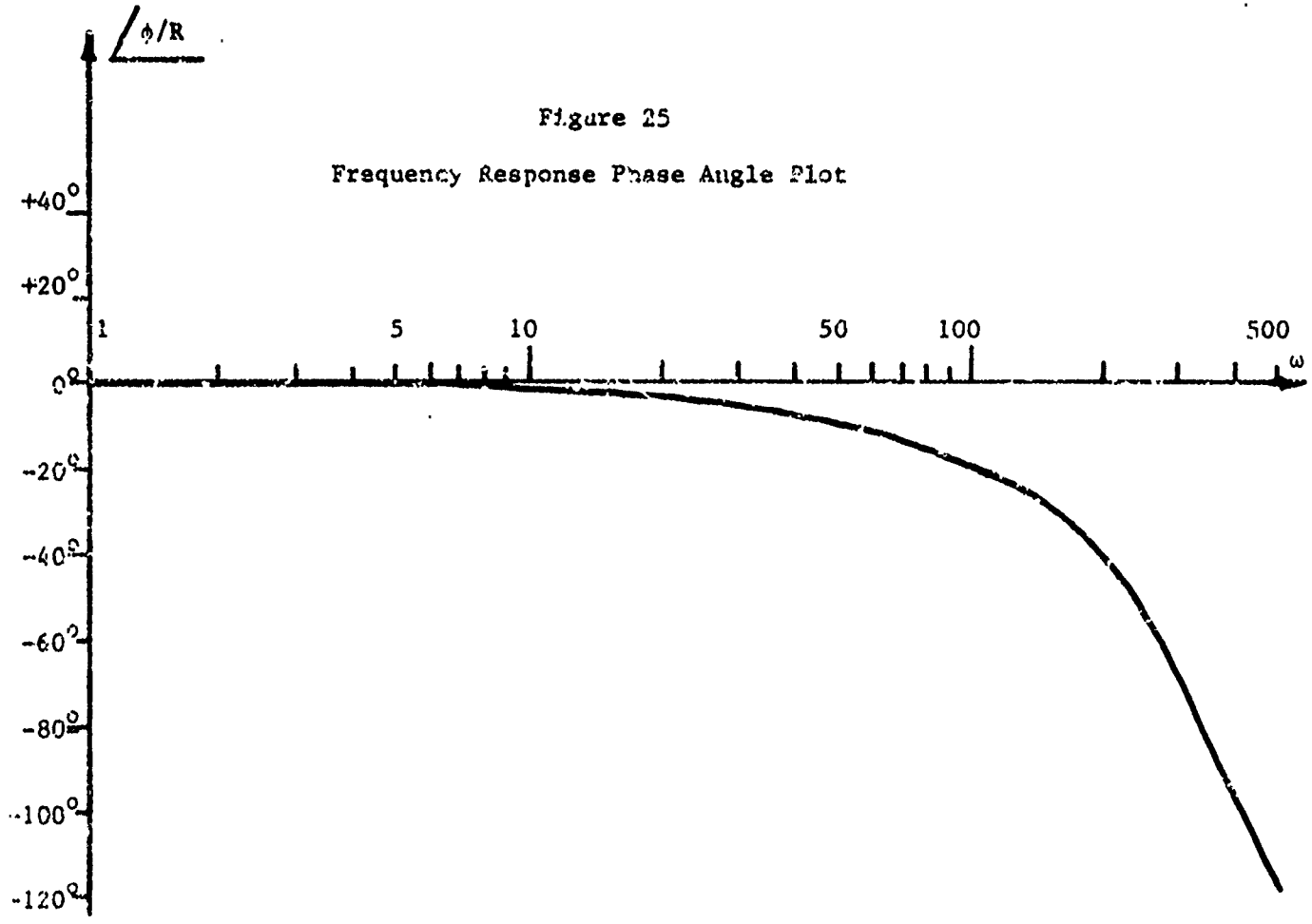

Figure 25

Frequency Response Phase Angle Plot

Figure 26

Transient Response

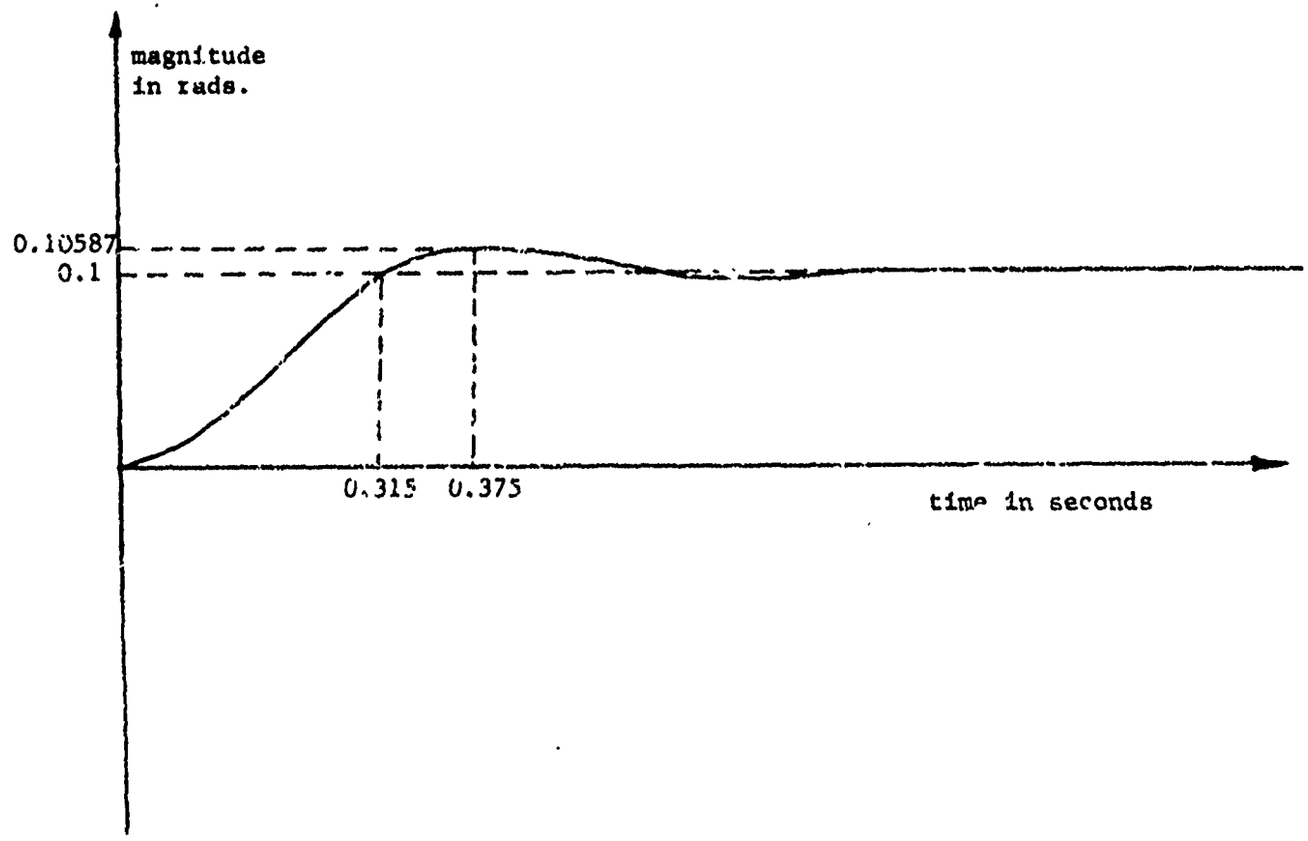

CHAPTER 7

DISCUSSION AND CONCLUSIONS

The performance of the system follows an expected trend when compared to the trend of the inputs. It can be seen from table 6 that as the magnitude of the step input decreases, the system overshoot increases. As the magnitude of the step decreases there is less torque required to drive the system; hence there is less saturation of the load pressure, and the system behaves more like a linear system.

The important question is: Which set of parameter values should be used for the final system? Since the physical inputs to the system will be of a random nature (pitch, roll and yaw), there will be a wide range of inputs to the system. The system will obviously not be able to perform in an optimal manner for all the inputs. One approach to determine the best set of parameters might be to use each step as the input to each optimal system and compare the results.

A consideration of the sensitivity check in table 7, and an overall view of the parameters in table 6 may serve just as well. If the change in the percent overshoot from the optimum value (optimum value is 5.87 %) is considered, then the system is somewhat insensitive to all the parameters except for ZL1. An examination of the values for ZL1 given in table 6 shows that the smallest value

for ZL1 is approximately 91 % of the largest value. If a value somewhere in between is chosen, the performance of the system for any of the inputs will not be affected greatly.

KF, K_6 and ZL2 all have wide variations in their parameter values as can be seen from table 6, however an examination of table 7 shows that these three parameters are all very insensitive with respect to the change in percent overshoot. PK and VK do not vary a great deal, nor are they very sensitive.

Considering the data in chapter 6, the final decision on the parameter values must be made only after considering all the available facts. Facts such as linearity of elements (amplifier gains, compensator poles, etc.), and the actual shape of the input distribution. Ideally, if the actual system input were available, the optimal parameters could be found. However the actual system input is not always available as is the case here. Therefore the optimal parameters of chapter 6 can only be used as one factor in the final choice for the final system.

The frequency response plots of figures 24 and 25 reveal that the 300 rad/sec bandwidth requirement has been satisfied for the optimal system with the 0.1 step input. They also reveal that there is no problem with stability as is sometimes encountered in systems with non-linear elements. The transient response in appendix A & Fig. 26 proves the dominance of the pressure saturation over the system performance as was expected. One final conclusion can be drawn by noting the small amount of overshoot for the systems with the three largest

inputs, and concluding that for systems with strict limitations on available drive torque the overshoot tends to be small.

Appendix A

System Output

A list of the print-plotted variables and their definitions are given in table 8.

Table 8

Output Variables

PHI	-	system output
X900	-	torque
ISE	-	integral squared error

MINIMUM 0.0 — PHI VERSUS T — MAXIMUM 1.0587E-01

T	PHI	I
0.0	0.0	+
5.0000E-03	3.7547E-05	+
1.0000E-02	1.5019E-04	+
1.5000E-02	3.3792E-04	+
2.0000E-02	6.0075E-04	+
2.5000E-02	9.3867E-04	+
3.0000E-02	1.3517E-03	+
3.5000E-02	1.8398E-03	+
4.0000E-02	2.4030E-03	-+
4.5000E-02	3.0413E-03	-+
5.0000E-02	3.7547E-03	-+
5.5000E-02	4.5432E-03	--+
6.0000E-02	5.4067E-03	--+
6.5000E-02	6.3454E-03	--+
7.0000E-02	7.3592E-03	---+
7.5000E-02	8.4480E-03	---+
8.0000E-02	9.6120E-03	----+
8.5000E-02	1.0851E-02	-----+
9.0000E-02	1.2165E-02	-----+
9.5000E-02	1.3554E-02	------+
1.0000E-01	1.5019E-02	-------+
1.0500E-01	1.6558E-02	-------+

Reproduced from best available copy.

1.1000E-01	1.8173E-02	---------+
1.1500E-01	1.9862E-02	----------+
1.2000E-01	2.1627E-02	-----------+
1.2500E-01	2.3467E-02	------------+
1.3000E-01	2.5382E-02	------------+
1.3500E-01	2.7372E-02	-------------+
1.4000E-01	2.9437E-02	--------------+
1.4500E-01	3.1577E-02	---------------+
1.5000E-01	3.3792E-02	----------------+
1.5500E-01	3.6083E-02	-----------------+
1.6000E-01	3.8448E-02	------------------+
1.6500E-01	4.0889E-02	-------------------+
1.7000E-01	4.3404E-02	--------------------+
1.7500E-01	4.5995E-02	---------------------+
1.8000E-01	4.8661E-02	----------------------+
1.8500E-01	5.1402E-02	-----------------------+
1.9000E-01	5.4196E-02	------------------------+
1.9500E-01	5.6945E-02	-------------------------+
2.0000E-01	5.9618E-02	--------------------------+
2.0500E-01	6.2216E-02	---------------------------+
2.1000E-01	6.4739E-02	----------------------------+
2.1500E-01	6.7187E-02	-----------------------------+
2.2000E-01	6.9560E-02	------------------------------+
2.2500E-01	7.1858E-02	-------------------------------+
2.3000E-01	7.4081E-02	--------------------------------+
2.3500E-01	7.6229E-02	---------------------------------+
2.4000E-01	7.8301E-02	----------------------------------+
2.4500E-01	8.0299E-02	-----------------------------------+
2.5000E-01	8.2221E-02	------------------------------------+

MINIMUM PHI VERSUS T MAXIMUM

0.0 1.0587E-01

T	PHI
2.5500E-01	8.4068E-02
2.6000E-01	8.5840E-02
2.6500E-01	8.7538E-02
2.7000E-01	8.9159E-02
2.7500E-01	9.0706E-02
2.8000E-01	9.2178E-02
2.8500E-01	9.3575E-02
2.9000E-01	9.4897E-02
2.9500E-01	9.6143E-02
3.0000E-01	9.7314E-02
3.0500E-01	9.8411E-02
3.1000E-01	9.9432E-02
3.1500E-01	1.0038E-01
3.2000E-01	1.0125E-01
3.2500E-01	1.0205E-01
3.3000E-01	1.0277E-01
3.3500E-01	1.0341E-01
3.4000E-01	1.0398E-01
3.4500E-01	1.0448E-01
3.5000E-01	1.0490E-01
3.5500E-01	1.0524E-01
3.6000E-01	1.0551E-01

3.6500E-01	1.0571E-01	----------
3.7000E-01	1.0583E-01	----------
3.7500E-01	1.0587E-01	----------
3.8000E-01	1.0584E-01	----------
3.8500E-01	1.0574E-01	----------
3.9000E-01	1.0556E-01	----------
3.9500E-01	1.0530E-01	----------
4.0000E-01	1.0497E-01	----------
4.0500E-01	1.0457E-01	----------
4.1000E-01	1.0409E-01	----------
4.1500E-01	1.0353E-01	----------
4.2000E-01	1.0290E-01	----------
4.2500E-01	1.0222E-01	----------
4.3000E-01	1.0160E-01	----------
4.3500E-01	1.0105E-01	----------
4.4000E-01	1.0057E-01	----------
4.4500E-01	1.0017E-01	----------
4.5000E-01	9.9848E-02	----------
4.5500E-01	9.9598E-02	----------
4.6000E-01	9.9424E-02	----------
4.6500E-01	9.9324E-02	----------
4.7000E-01	9.9300E-02	----------
4.7500E-01	9.9351E-02	----------
4.8000E-01	9.9476E-02	----------
4.8500E-01	9.9677E-02	----------
4.9000E-01	9.9953E-02	----------
4.9500E-01	1.0020E-01	----------
5.0000E-01	1.0038E-01	----------
5.0500E-01	1.0048E-01	----------

MINIMUM PHI VERSUS T MAXIMUM

0.0 1.0587E-01

T	PHI	I
5.1000E-01	1.0051E-01	----------
5.1500E-01	1.0046E-01	----------
5.2000E-01	1.0039E-01	----------
5.2500E-01	1.0036E-01	----------
5.3000E-01	1.0035E-01	----------
5.3500E-01	1.0034E-01	----------
5.4000E-01	1.0033E-01	----------
5.4500E-01	1.0033E-01	----------
5.5000E-01	1.0032E-01	----------
5.5500E-01	1.0032E-01	----------
5.6000E-01	1.0031E-01	----------
5.6500E-01	1.0031E-01	----------
5.7000E-01	1.0030E-01	----------
5.7500E-01	1.0029E-01	----------
5.8000E-01	1.0029E-01	----------
5.8500E-01	1.0029E-01	----------
5.9000E-01	1.0028E-01	----------
5.9500E-01	1.0028E-01	----------
6.0000E-01	1.0027E-01	----------
6.0500E-01	1.0027E-01	----------
6.1000E-01	1.0027E-01	----------
6.1500E-01	1.0026E-01	----------

Reproduced from best available copy.

6.2000E-01	1.0025E-01	----------+
6.2500E-01	1.0026E-01	----------+
6.3000E-01	1.0025E-01	----------+
6.3500E-01	1.0024E-01	----------+
6.4000E-01	1.0025E-01	----------+
6.4500E-01	1.0024E-01	----------+
6.5000E-01	1.0024E-01	----------+
6.5500E-01	1.0023E-01	----------+
6.6000E-01	1.0024E-01	----------+
6.6500E-01	1.0023E-01	----------+
6.7000E-01	1.0022E-01	----------+
6.7500E-01	1.0022E-01	----------+
6.8000E-01	1.0022E-01	----------+
6.8500E-01	1.0021E-01	----------+
6.9000E-01	1.0022E-01	----------+
6.9500E-01	1.0021E-01	----------+
7.0000E-01	1.0021E-01	----------+
7.0500E-01	1.0021E-01	----------+
7.1000E-01	1.0021E-01	----------+
7.1500E-01	1.0021E-01	----------+
7.2000E-01	1.0021E-01	----------+
7.2500E-01	1.0020E-01	----------+
7.3000E-01	1.0020E-01	----------+
7.3500E-01	1.0020E-01	----------+
7.4000E-01	1.0020E-01	----------+
7.4500E-01	1.0019E-01	----------+
7.5000E-01	1.0018E-01	----------+
7.5500E-01	1.0019E-01	----------+
7.6000E-01	1.0019E-01	----------+

MINIMUM PHI VERSUS T MAXIMUM

0.0 1.0587E-01

T	PHI	I ---------- I
7.6500E-01	1.0018E-01	----------
7.7000E-01	1.0019E-01	----------
7.7500E-01	1.0018E-01	----------
7.8000E-01	1.0018E-01	----------
7.8500E-01	1.0018E-01	----------
7.9000E-01	1.0018E-01	----------
7.9500E-01	1.0017E-01	----------
8.0000E-01	1.0018E-01	----------
8.0500E-01	1.0018E-01	----------
8.1000E-01	1.0018E-01	----------
8.1500E-01	1.0017E-01	----------
8.2000E-01	1.0017E-01	----------
8.2500E-01	1.0017E-01	----------
8.3000E-01	1.0016E-01	----------
8.3500E-01	1.0017E-01	----------
8.4000E-01	1.0017E-01	----------
8.4500E-01	1.0017E-01	----------
8.5000E-01	1.0016E-01	----------
8.5500E-01	1.0016E-01	----------
8.6000E-01	1.0016E-01	----------
8.6500E-01	1.0016E-01	----------
8.7000E-01	1.0016E-01	----------

8.7500E-01	1.0017E-01	----------+
8.8000E-01	1.0016E-01	----------+
8.8500E-01	1.0016E-01	----------+
8.9000E-01	1.0016E-01	----------+
8.9500E-01	1.0016E-01	----------+
9.0000E-01	1.0016E-01	----------+
9.0500E-01	1.0015E-01	----------+
9.1000E-01	1.0016E-01	----------+
9.1500E-01	1.0015E-01	----------+
9.2000E-01	1.0014E-01	----------+
9.2500E-01	1.0015E-01	----------+
9.3000E-01	1.0014E-01	----------+
9.3500E-01	1.0015E-01	----------+
9.4000E-01	1.0015E-01	----------+
9.4500E-01	1.0015E-01	----------+
9.5000E-01	1.0015E-01	----------+
9.5500E-01	1.0014E-01	----------+
9.6000E-01	1.0014E-01	----------+
9.6500E-01	1.0013E-01	----------+
9.7000E-01	1.0014E-01	----------+
9.7500E-01	1.0014E-01	----------+
9.8000E-01	1.0015E-01	----------+
9.8500E-01	1.0014E-01	----------+
9.9000E-01	1.0014E-01	----------+
9.9500E-01	1.0014E-01	----------+
1.0000E 00	1.0014E-01	----------+

MINIMUM -3.0000E 03 X900 VERSUS T MAXIMUM 3.0000E 03

T	X900
0.0	3.0000E 03
5.0000E-03	3.0000E 03
1.0000E-02	3.0000E 03
1.5000E-02	3.0000E 03
2.0000E-02	3.0000E 03
2.5000E-02	3.0000E 03
3.0000E-02	3.0000E 03
3.5000E-02	3.0000E 03
4.0000E-02	3.0000E 03
4.5000E-02	3.0000E 03
5.0000E-02	3.0000E 03
5.5000E-02	3.0000E 03
6.0000E-02	3.0000E 03
6.5000E-02	3.0000E 03
7.0000E-02	3.0000E 03
7.5000E-02	3.0000E 03
8.0000E-02	3.0000E 03
8.5000E-02	3.0000E 03
9.0000E-02	3.0000E 03
9.5000E-02	3.0000E 03
1.0000E-01	3.0000E 03
1.0500E-01	3.0000E 03

```
1.1000E-01    3.0000E 03   ----------------------------------------------+
1.1500E-01    3.0000E 03   ----------------------------------------------+
1.2000E-01    3.0000E 03   ----------------------------------------------+
1.2500E-01    3.0000E 03   ----------------------------------------------+
1.3000E-01    3.0000E 03   ----------------------------------------------+
1.3500E-01    3.0000E 03   ----------------------------------------------+
1.4000E-01    3.0000E 03   ----------------------------------------------+
1.4500E-01    3.0000E 03   ----------------------------------------------+
1.5000E-01    3.0000E 03   ----------------------------------------------+
1.5500E-01    3.0000E 03   ----------------------------------------------+
1.6000E-01    3.0000E 03   ----------------------------------------------+
1.6500E-01    3.0000E 03   ----------------------------------------------+
1.7000E-01    3.0000E 03   ----------------------------------------------+
1.7500E-01    3.0000E 03   ----------------------------------------------+
1.8000E-01    3.0000E 03   ----------------------------------------------+
1.8500E-01    3.0000E 03   ----------------------------------------------+
1.9000E-01   -3.0000E 03   +
1.9500E-01   -3.0000E 03   +
2.0000E-01   -3.0000E 03   +
2.0500E-01   -3.0000E 03   +
2.1000E-01   -3.0000E 03   +
2.1500E-01   -3.0000E 03   +
2.2000E-01   -3.0000E 03   +
2.2500E-01   -3.0000E 03   +
2.3000E-01   -3.0000E 03   +
2.3500E-01   -3.0000E 03   +
2.4000E-01   -3.0000E 03   +
2.4500E-01   -3.0000E 03   +
2.5000E-01   -3.0000E 03   +
```

X900 VERSUS T

MINIMUM -3.0000E 03 | MAXIMUM 3.0000E 03

T	X900	I
2.5500E-01	-3.0000E 03	+
2.6000E-01	-3.0000E 03	+
2.6500E-01	-3.0000E 03	+
2.7000E-01	-3.0000E 03	+
2.7500E-01	-3.0000E 03	+
2.8000E-01	-3.0000E 03	+
2.8500E-01	-3.0000E 03	+
2.9000E-01	-3.0000E 03	+
2.9500E-01	-3.0000E 03	+
3.0000E-01	-3.0000E 03	+
3.0500E-01	-3.0000E 03	+
3.1000E-01	-3.0000E 03	+
3.1500E-01	-3.0000E 03	+
3.2000E-01	-3.0000E 03	+
3.2500E-01	-3.0000E 03	+
3.3000E-01	-3.0000E 03	+
3.3500E-01	-3.0000E 03	+
3.4000E-01	-3.0000E 03	+
3.4500E-01	-3.0000E 03	+
3.5000E-01	-3.0000E 03	+
3.5500E-01	-3.0000E 03	+
3.6000E-01	-3.0000E 03	+

Reproduced from best available copy.

```
3.6500E-01   -3.0000E 03   +
3.7000E-01   -3.0000E 03   +
3.7500E-01   -3.0000E 03   +
3.8000E-01   -3.0000E 03   +
3.8500E-01   -3.0000E 03   +
3.9000E-01   -3.0000E 03   +
3.9500E-01   -3.0000E 03   +
4.0000E-01   -3.0000E 03   +
4.0500E-01   -3.0000E 03   +
4.1000E-01   -3.0000E 03   +
4.1500E-01   -3.0000E 03   +
4.2000E-01   -3.0000E 03   +
4.2500E-01    3.0000E 03   ----------------------------------------------+
4.3000E-01    3.0000E 03   ----------------------------------------------+
4.3500E-01    3.0000E 03   ----------------------------------------------+
4.4000E-01    3.0000E 03   ----------------------------------------------+
4.4500E-01    3.0000E 03   ----------------------------------------------+
4.5000E-01    3.0000E 03   ----------------------------------------------+
4.5500E-01    3.0000E 03   ----------------------------------------------+
4.6000E-01    3.0000E 03   ----------------------------------------------+
4.6500E-01    3.0000E 03   ----------------------------------------------+
4.7000E-01    3.0000E 03   ----------------------------------------------+
4.7500E-01    3.0000E 03   ----------------------------------------------+
4.8000E-01    3.0000E 03   ----------------------------------------------+
4.8500E-01    3.0000E 03   ----------------------------------------------+
4.9000E-01   -3.0000E 03   +
4.9500E-01   -3.0000E 03   +
5.0000E-01   -3.0000E 03   +
5.0500E-01   -3.0000E 03   +
```

```
                          MINIMUM                X900    VERSUS T                MAXIMUM
                        -3.0000E 03                                            3.0000E 03
 T                X900          I                                                  I
5.1000E-01   -3.0000E 03   +
5.1500E-01   -1.7515E 03   ----------+
5.2000E-01    3.0000E 03   ----------------------------------------------------+
5.2500E-01    1.4181E 03   ------------------------------------+
5.3000E-01   -3.1849E 02   ----------------------+
5.3500E-01    2.7886E 02   ---------------------------+
5.4000E-01    1.2834E 03   -----------------------------------+
5.4500E-01   -5.8900E 02   --------------------+
5.5000E-01    9.1605E 02   ---------------------------------+
5.5500E-01   -1.5188E 03   ------------+
5.6000E-01   -7.3749E 01   ------------------------+
5.6500E-01   -2.8056E 02   ----------------------+
5.7000E-01   -1.3561E 03   -------------+
5.7500E-01    4.2463E 02   ----------------------------+
5.8000E-01   -1.0272E 02   -------------------------+
5.8500E-01   -8.1606E 02   -----------------+
5.9000E-01    9.2852E 02   ---------------------------------+
5.9500E-01   -1.4724E 03   ------------+
6.0000E-01    6.2152E 01   -------------------------+
6.0500E-01    6.3152E 02   -----------------------------+
6.1000E-01   -1.9180E 02   ----------------------+
6.1500E-01   -9.8040E 02   ----------------+
```

6.2000E-01	1.3834E 03	----------+
6.2500E-01	-2.6596E 02	----------+
6.3000E-01	-1.1075E 03	----------+
6.3500E-01	1.0634E 03	----------+
6.4000E-01	-1.1117E 03	----------+
6.4500E-01	1.0079E 03	----------+
6.5000E-01	-1.2702E 03	----------+
6.5500E-01	5.7832E 02	----------+
6.6000E-01	-3.9860E 02	----------+
6.6500E-01	-2.4605E 02	----------+
6.7000E-01	-1.0849E 03	----------+
6.7500E-01	1.1248E 03	----------+
6.8000E-01	-9.4176E 02	----------+
6.8500E-01	1.4573E 03	----------+
6.9000E-01	-8.0895E 01	----------+
6.9500E-01	-6.8335E 02	----------+
7.0000E-01	4.0350E 02	----------+
7.0500E-01	8.2392E 01	----------+
7.1000E-01	1.7925E 02	----------+
7.1500E-01	8.3470E 02	----------+
7.2000E-01	-8.2762E 02	----------+
7.2500E-01	1.7260E 03	----------+
7.3000E-01	6.0195E 02	----------+
7.3500E-01	5.4073E 01	----------+
7.4000E-01	-3.5072E 02	----------+
7.4500E-01	-7.5666E 02	----------+
7.5000E-01	4.3462E 02	----------+
7.5500E-01	-2.0390E 02	----------+
7.6000E-01	-1.3125E 03	----------+

MINIMUM -3.0000E 03 X900 VERSUS T MAXIMUM 3.0000E 03

T	X900	I
7.6500E-01	5.1816E 02	----------+
7.7000E-01	-4.8637E 02	----------+
7.7500E-01	-4.8194E 01	----------+
7.8000E-01	1.5051E 02	----------+
7.8500E-01	1.0032E 03	----------+
7.9000E-01	-1.3259E 03	----------+
7.9500E-01	4.2096E 02	----------+
8.0000E-01	4.7346E 02	----------+
8.0500E-01	8.1546E 02	----------+
8.1000E-01	-3.8168E 02	----------+
8.1500E-01	1.1310E 02	----------+
8.2000E-01	7.9718E 02	----------+
8.2500E-01	-7.9556E 02	----------+
8.3000E-01	1.6710E 03	----------+
8.3500E-01	4.5564E 02	----------+
8.4000E-01	6.9409E 02	----------+
8.4500E-01	4.0418E 01	----------+
8.5000E-01	-6.0248E 02	----------+
8.5500E-01	3.1686E 02	----------+
8.6000E-01	5.5742E 02	----------+
8.6500E-01	2.9157E 02	----------+
8.7000E-01	9.9625E 02	----------+

8.7500E-01	-1.2906E 03	----------+
8.8000E-01	5.0564E 02	----------+
8.8500E-01	1.6488E 02	----------+
8.9000E-01	3.9824E 02	----------+
8.9500E-01	1.0370E 03	----------+
9.0000E-01	-1.2655E 03	----------+
9.0500E-01	5.6377E 02	----------+
9.1000E-01	-9.1509E 01	----------+
9.1500E-01	-1.0712E 03	----------+
9.2000E-01	1.1424E 03	----------+
9.2500E-01	-9.1107E 02	----------+
9.3000E-01	1.5461E 03	----------+
9.3500E-01	1.4294E 02	----------+
9.4000E-01	6.1709E 02	----------+
9.4500E-01	4.6746E 01	----------+
9.5000E-01	-4.1917E 02	----------+
9.5500E-01	-4.7942E 02	----------+
9.6000E-01	-7.8686E 02	----------+
9.6500E-01	2.7342E 02	----------+
9.7000E-01	3.8670E 02	----------+
9.7500E-01	8.6203E 02	----------+
9.8000E-01	-7.3671E 02	----------+
9.8500E-01	1.5907E 03	----------+
9.9000E-01	2.4961E 02	----------+
9.9500E-01	1.1258E 03	----------+
1.0000E 00	-1.0128E 03	----------+

MINIMUM 0.0 ISE VERSUS T MAXIMUM 1.3941E-03

T	ISE	I
0.0	0.0	+
5.0000E-03	4.9987E-05	-+
1.0000E-02	9.9900E-05	---+
1.5000E-02	1.4966E-04	-----+
2.0000E-02	1.9920E-04	-------+
2.5000E-02	2.4844E-04	--------+
3.0000E-02	2.9731E-04	----------+
3.5000E-02	3.4573E-04	----------+
4.0000E-02	3.9364E-04	----------+
4.5000E-02	4.4096E-04	----------+
5.0000E-02	4.8762E-04	----------+
5.5000E-02	5.3357E-04	----------+
6.0000E-02	5.7872E-04	----------+
6.5000E-02	6.2302E-04	----------+
7.0000E-02	6.6643E-04	----------+
7.5000E-02	7.0883E-04	----------+
8.0000E-02	7.5021E-04	----------+
8.5000E-02	7.9051E-04	----------+
9.0000E-02	8.2967E-04	----------+
9.5000E-02	8.6764E-04	----------+
1.0000E-01	9.0436E-04	----------+
1.0500E-01	9.3985E-04	----------+

1.1000E-01	9.7399E-04	----------+
1.1500E-01	1.0068E-03	----------+
1.2000E-01	1.0382E-03	----------+
1.2500E-01	1.0682E-03	----------+
1.3000E-01	1.0968E-03	----------+
1.3500E-01	1.1239E-03	----------+
1.4000E-01	1.1495E-03	----------+
1.4500E-01	1.1737E-03	----------+
1.5000E-01	1.1963E-03	----------+
1.5500E-01	1.2175E-03	----------+
1.6000E-01	1.2372E-03	----------+
1.6500E-01	1.2554E-03	----------+
1.7000E-01	1.2721E-03	----------+
1.7500E-01	1.2874E-03	----------+
1.8000E-01	1.3013E-03	----------+
1.8500E-01	1.3138E-03	----------+
1.9000E-01	1.3249E-03	----------+
1.9500E-01	1.3348E-03	----------+
2.0000E-01	1.3435E-03	----------+
2.0500E-01	1.3512E-03	----------+
2.1000E-01	1.3578E-03	----------+
2.1500E-01	1.3636E-03	----------+
2.2000E-01	1.3686E-03	----------+
2.2500E-01	1.3729E-03	----------+
2.3000E-01	1.3766E-03	----------+
2.3500E-01	1.3796E-03	----------+
2.4000E-01	1.3822E-03	----------+
2.4500E-01	1.3844E-03	----------+
2.5000E-01	1.3861E-03	----------+

MINIMUM ISE VERSUS T MAXIMUM

0.0 1.3941E-03

T	ISE	I
2.5500E-01	1.3876E-03	----------
2.6000E-01	1.3887E-03	----------
2.6500E-01	1.3896E-03	----------
2.7000E-01	1.3902E-03	----------
2.7500E-01	1.3908E-03	----------
2.8000E-01	1.3911E-03	----------
2.8500E-01	1.3914E-03	----------
2.9000E-01	1.3915E-03	----------
2.9500E-01	1.3916E-03	----------
3.0000E-01	1.3917E-03	----------
3.0500E-01	1.3917E-03	----------
3.1000E-01	1.3917E-03	----------
3.1500E-01	1.3917E-03	----------
3.2000E-01	1.3917E-03	----------
3.2500E-01	1.3917E-03	----------
3.3000E-01	1.3918E-03	----------
3.3500E-01	1.3918E-03	----------
3.4000E-01	1.3919E-03	----------
3.4500E-01	1.3920E-03	----------
3.5000E-01	1.3921E-03	----------
3.5500E-01	1.3922E-03	----------
3.6000E-01	1.3924E-03	----------

3.6500E-01	1.3925E-03	----------+
3.7000E-01	1.3927E-03	----------+
3.7500E-01	1.3929E-03	----------+
3.8000E-01	1.3930E-03	----------+
3.8500E-01	1.3932E-03	----------+
3.9000E-01	1.3934E-03	----------+
3.9500E-01	1.3935E-03	----------+
4.0000E-01	1.3936E-03	----------+
4.0500E-01	1.3938E-03	----------+
4.1000E-01	1.3938E-03	----------+
4.1500E-01	1.3939E-03	----------+
4.2000E-01	1.3940E-03	----------+
4.2500E-01	1.3940E-03	----------+
4.3000E-01	1.3940E-03	----------+
4.3500E-01	1.3940E-03	----------+
4.4000E-01	1.3940E-03	----------+
4.4500E-01	1.3940E-03	----------+
4.5000E-01	1.3940E-03	----------+
4.5500E-01	1.3940E-03	----------+
4.6000E-01	1.3940E-03	----------+
4.6500E-01	1.3940E-03	----------+
4.7000E-01	1.3940E-03	----------+
4.7500E-01	1.3940E-03	----------+
4.8000E-01	1.3940E-03	----------+
4.8500E-01	1.3940E-03	----------+
4.9000E-01	1.3940E-03	----------+
4.9500E-01	1.3940E-03	----------+
5.0000E-01	1.3940E-03	----------+
5.0500E-01	1.3940E-03	----------+

MINIMUM 0.0 ISE VERSUS T MAXIMUM 1.3941E-03

T	ISE
5.1000E-01	1.3940E-03
5.1500E-01	1.3940E-03
5.2000E-01	1.3940E-03
5.2500E-01	1.3940E-03
5.3000E-01	1.3940E-03
5.3500E-01	1.3941E-03
5.4000E-01	1.3941E-03
5.4500E-01	1.3941E-03
5.5000E-01	1.3941E-03
5.5500E-01	1.3941E-03
5.6000E-01	1.3941E-03
5.6500E-01	1.3941E-03
5.7000E-01	1.3941E-03
5.7500E-01	1.3941E-03
5.8000E-01	1.3941E-03
5.8500E-01	1.3941E-03
5.9000E-01	1.3941E-03
5.9500E-01	1.3941E-03
6.0000E-01	1.3941E-03
6.0500E-01	1.3941E-03
6.1000E-01	1.3941E-03
6.1500E-01	1.3941E-03

BIBLIOGRAPHY

1. Athans, M.; Falb, P. L., Optimal Control: An Introduction to the Theory and its Applications, New York: McGraw-Hill, 1966.

2. Dettman, John W., Mathematical Methods in Physics and Engineering, New York: McGraw-Hill, 1969.

3. Elgerd, Olle I., Controls Systems Theory, New York: McGraw-Hill, 1967.

4. Hooke, R.; Jeeves, T. A., Direct Search Solution of Numerical and Statistical Problems, J. Assoc. Computer Machines, 8:212-229, 1961.

5. IBM, System/360 Continuous System Modeling Program, (360A-CX-16X), Users Manual, No. H20-0367-2.

6. Lange-Nielsen, Truls and Lance, G. M., A Pattern Search Algorithm for Feedback Control System Parameter Optimization, Themis Report No. 32, AD726465.

7. Newton, G. C. Jr.; Gould, L. A.; Kaiser, James F., Analytical Design of Linear Feedback Controls, New York: John Wiley & Sons, Inc., 1957.

8. Philco-Ford Corp., Aeronutronic Div., Final Report: Concept Study of an Advanced Weapon Stabilization System for a Two-Man Cupola, Newport Beach, Calif., 1968.

9. Rosenbrock, H. H., An Automatic Method for Finding the Greatest or Least Value of a Function, Computer J., 3:175-184, 1960.

10. Lange-Nielsen, Truls, Parameter Optimization of Feedback Control Systems Using Pattern Search, University of Iowa Ph.D. Thesis, 1970.

END