AD-755 431

# ON THE APPLICATION OF HAAR FUNCTIONS

John E. Shore

Naval Research Laboratory
Washington, D. C.

4 January 1973

DISTRIBUTED BY:

NTIS

National Technical Information Service
U. S. DEPARTMENT OF COMMERCE
5285 Port Royal Road, Springfield Va 22151

NRL Report 7467

# On the Application of Haar Functions

JOHN E. SHORE

*Information Systems Group*

AD 755431

January 4, 1973

D D C
RECEIVED
FEB 14 1973

Reproduced by
NATIONAL TECHNICAL
INFORMATION SERVICE
U S Department of Commerce
Springfield VA 22151

NAVAL RESEARCH LABORATORY
Washington, D.C.

26

Approved for public release; distribution unlimited.

Security Classification

## DOCUMENT CONTROL DATA - R & D

(Security classification of title, body of abstract and indexing annotation must be entered when the overall report is classified)

| | |
|---|---|
| 1 ORIGINATING ACTIVITY (Corporate author)<br>Naval Research Laboratory<br>Washington, D.C. 20375 | 2a. REPORT SECURITY CLASSIFICATION<br>UNCLASSIFIED<br>2b GROUP |

3 REPORT TITLE

ON THE APPLICATION OF HAAR FUNCTIONS

4 DESCRIPTIVE NOTES (Type of report and inclusive dates)
Interim report on a continuing NRL Problem.

5 AUTHOR(S) (First name, middle initial, last name)

John E. Shore

| | | |
|---|---|---|
| 6 REPORT DATE<br>January 4, 1973 | 7a. TOTAL NO OF PAGES<br>26 | 7b. NO. OF REFS<br>11 |
| 8a. CONTRACT OR GRANT NO<br>NRL Problems B02-14.701 and B02-10<br>b. PROJECT NO<br>XF 53-241-003<br>c.<br>d. | 9a. ORIGINATOR'S REPORT NUMBER(S)<br>NRL Report 7467<br>9b OTHER REPORT NO(S) (Any other numbers that may be assigned this report) | |

10 DISTRIBUTION STATEMENT

Approved for public release; distribution unlimited.

| | |
|---|---|
| 11 SUPPLEMENTARY NOTES | 12 SPONSORING MILITARY ACTIVITY<br>Department of the Navy<br>Naval Electronic Systems Command<br>Washington, D.C. 20360 |

13 ABSTRACT

Recent interest in the application of Walsh functions suggests that Haar functions, close relatives of Walsh functions, may also be useful. In this primarily tutorial report, Haar functions are reviewed briefly, and the computational and memory requirements of the Haar transform are analyzed; applications are then discussed. It is concluded that whereas Haar functions are unlikely to be as useful in as many applications as Walsh functions may be, they seem especially well suited to data coding, pattern recognition, and, perhaps, multiplexing.

DD FORM 1 NOV 65 1473 (PAGE 1)

S/N 0101-807-6801



Security Classification

Security Classification

| 14 KEY WORDS | LINK A ROLE | LINK A WT | LINK B ROLE | LINK B WT | LINK C ROLE | LINK C WT |
|---|---|---|---|---|---|---|
| Haar functions | | | | | | |
| Walsh functions | | | | | | |
| Orthogonal functions | | | | | | |
| Series convergence | | | | | | |
| Multiplexing | | | | | | |
| Image coding | | | | | | |

DD FORM 1 NOV 65 1473 (BACK)
(PAGE 2)



Security Classification

CONTENTS

Abstract ..... ii
Problem Status ..... ii
Authorization ..... ii

1. INTRODUCTION ..... 1

2. RELEVANT PROPERTIES OF HAAR SERIES ..... 1

2.1 Haar Functions ..... 1
2.2 Haar Series Convergence ..... 2
2.3 Mean-Value Properties of Partial Sums and Coefficients ..... 4
2.4 Approximation Accuracy ..... 6

3. CALCULATION OF THE HAAR TRANSFORM ..... 6

3.1 Modified Haar Transform ..... 6
3.2 Complete Haar Transform ..... 9

4. IMPLICATIONS FOR APPLICATIONS ..... 10

4.1 General Remarks ..... 10
4.2 Data Coding ..... 10
4.3 Multiplexing ..... 11
4.4 Pattern Recognition; Edge Detection ..... 19
4.5 Information Theory ..... 20

5. CONCLUSION ..... 20

6. ACKNOWLEDGMENTS ..... 21

REFERENCES ..... 21

## ABSTRACT

Recent interest in the application of Walsh functions suggests that Haar functions, close relatives to Walsh functions, may also be useful. In this primarily tutorial report, Haar functions are reviewed briefly, and the computational and memory requirements of the Haar transform are analyzed; applications are then discussed. It is concluded that whereas Haar functions are unlikely to be as useful in as many applications as Walsh functions may be, they seem especially well suited to data coding, pattern recognition, and, perhaps, multiplexing.


## PROBLEM STATUS

Interim report on a continuing NRL Problem.

## AUTHORIZATION

NRL Problems B02-14.701 and B02-10
Project XF 53-241-003


Manuscript submitted July 19, 1972

# ON THE APPLICATION OF HAAR FUNCTIONS

## 1. INTRODUCTION

Interest in the applications of Walsh functions (1) has been increasing (2-4), suggesting that related functions may also be useful. One such set of functions was introduced in 1909 by the Hungarian mathematician Alfred Haar (5). Although some attention has been given to the possible application of Haar functions (6,7), the principal focus of discussion has been on Walsh functions.

The purpose of this report is to describe those properties of Haar functions that seem relevant, to discuss possible applications, and to draw conclusions as to their potential range of use. Basic properties of Haar series are given in Section 2. The material is abstracted from Ref. 8, wherein complete mathematical details may be found. Several aspects of the Haar transform, including computational and memory requirements, are discussed in Section 3. Applications of Haar functions are discussed in Section 4.

## 2. RELEVANT PROPERTIES OF HAAR SERIES

### 2.1 Haar Functions

The Haar orthonormal sequence is defined on the closed interval $[0, 1]$ and is composed of functions labeled by two indices:

$$\left\{\varphi_n^m\right\} = \varphi_0; \varphi_1^1 \; \varphi_2^1; \varphi_2^2; \ldots; \varphi_k^1, \ldots, \varphi_k^{2^{k-1}}; \ldots \tag{1}$$

The functions are defined as follows:

$$\varphi_0(x) = 1, \qquad \text{for } 0 \leqslant x \leqslant 1$$

$$\varphi_1^1(x) = \begin{cases} 1, & \text{for } 0 \leqslant x < 1/2 \\ -1, & \text{for } 1/2 < x \leqslant 1 \end{cases}$$

$$\varphi_2^1(x) = \begin{cases} \sqrt{2}, & \text{for } 0 \leqslant x < 1/4 \\ -\sqrt{2}, & \text{for } 1/4 < x < 1/2 \\ 0, & \text{for } 1/2 < x \leqslant 1 \end{cases} \tag{2}$$

(cont'd)

$$\varphi_2^2(x) = \begin{cases} 0, & \text{for } 0 \leqslant x < 1/2 \\ \sqrt{2}, & \text{for } 1/2 < x < 3/4 \\ -\sqrt{2}, & \text{for } 3/4 < x \leqslant 1 \end{cases}$$

$$\vdots$$

$$\varphi_n^m(x) = \begin{cases} 2^{(n-1)/2}, & \text{for } \dfrac{m-1}{2^{n-1}} < x < \dfrac{m-1/2}{2^{n-1}} \\ -2^{(n-1)/2}, & \text{for } \dfrac{m-1/2}{2^{n-1}} < x < \dfrac{m}{2^{n-1}} \\ 0, & \text{for } 0 < x < \dfrac{m-1}{2^{n-1}} \text{ and } \dfrac{m}{2^{n-1}} < x < 1 \end{cases} \tag{2}$$

At points of discontinuity, the Haar functions are defined to be the average of the limits approached on the two sides of the discontinuity. The first few Haar functions are shown in Fig. 1.

The Haar functions are a complete orthonormal basis of $L^2[0,1]$, the space of functions $f(x)$ that are defined over $[0,1]$ with $f^2(x)$ integrable in the Lebesgue sense. In this report, all functions are assumed to be in $L^2[0,1]$.

## 2.2 Haar Series Convergence

Any function can be expressed as an infinite series in terms of Haar functions:

$$f(x) = c_0 + \sum_{n=1}^{\infty} \sum_{m=1}^{2^{n-1}} c_n^m \varphi_n^m(x), \tag{3}$$

where

$$c_n^m = \int_0^1 f(x)\varphi_n^m(x)\,dx. \tag{4}$$

For the purposes of this report, convergence is best discussed by means of the partial sums

$$S_N(x) = c_0 + \sum_{n=1}^{N} \sum_{m=1}^{2^{n-1}} c_n^m \varphi_n^m(x), \tag{5}$$

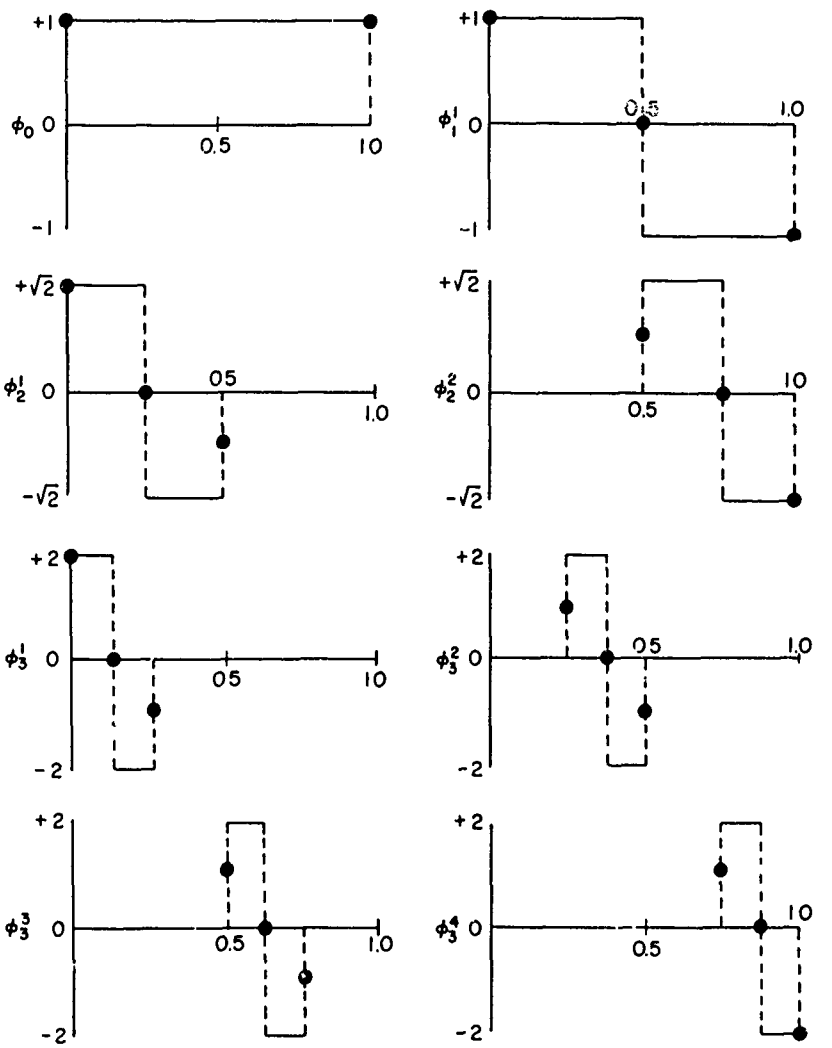


Fig. 1—The first eight Haar functions

which contain $2^N$ terms. The sum $S_{N+1}$ contains $2^N$ more terms than $S_N$, namely all Haar functions with the subscript $N + 1$. More general partial sums are discussed in Refs. 5 and 8.

For continuous functions, the sequence of partial sums $\{S_N\}$ is uniformly convergent to the given function. This means that, given a required accuracy of approximation $\epsilon$, there is a value $M$ such that for all $N \geqslant M$, we have $|S_N(x) - f(x)| < \epsilon$ for all $x$ in $[0, 1]$. For discontinuous functions, $\{S_N\}$ will still converge uniformly, provided all discontinuities are at so-called binary-rational points. A point $x$ is binary rational if integers $k$ and $P$ can be found that satisfy $x = k/2^P$, where $k = 0, 1, 2, \ldots, 2^P$. This convergence property for discontinuous functions derives from the fact that all Haar-function discontinuities are at binary-rational points.

We note that when discontinuous waveforms are associated with base 2 digital processing, an interval can usually be selected such that all discontinuities are at binary-rational points.

For functions with discontinuities at binary-irrational points, $S_N$, though no longer uniformly convergent, is still pointwise convergent everywhere except at the binary-irrational discontinuities. This means that given an approximation accuracy $\epsilon$ that must be satisfied at a particular point $x_1$, there is a value $M$ such that for all $N \geqslant M$ we have $|S_N(x_1) - f(x_1)| < \epsilon$. We cannot, however, guarantee that the required accuracy is obtained simultaneously at all points in [0,1].

## 2.3 Mean-Value Properties of Partial Sums and Coefficients

Several aspects of the potential utility of Haar functions derive from an important property of the partial sum. In the expansion of $f(x)$, the $N$th Haar partial sum $S_N(x)$ is a step function with $2^N$ equal-length steps. The value of $S_N(x)$ on each step is simply the mean value of $f(x)$ in the interval covered by the step. The value of $S_N(x)$ at a discontinuity between adjacent steps is halfway between the adjacent steps. Since the equation

$$\frac{d}{d\alpha}\left[\int_{x_1}^{x_2} |f(x) - \alpha|^2 \, dx\right] = 0$$

has the solution

$$\alpha = \frac{1}{x_2 - x_1} \int_{x_1}^{x_2} f(x) \, dx,$$

we see that $S_N$ is the step function of $2^N$ steps that is the best approximation to $f(x)$ in the mean-square-error sense. This mean-value property of $S_N$ is also true for the Walsh series expansion of $f(x)$ that has the same number of terms as $S_N$.

As an example, Fig. 2 shows six successive Haar approximations to the function

$$f(x) = 100x^2 e^{-10x},$$

each superimposed on the function itself. The effect of additional terms is simple, unlike the effect of additional terms when the function is expanded as a trigonometric Fourier series (or as a series in terms of other continuous bases of $L^2[0, 1]$). We note that it follows from this mean-value property that if $f(x)$ is constant in the interval covered by any step, then $S_N(x) = f(x)$ exactly on this step.

Now the coefficients in the Haar Series also have a simple relationship with the mean value of $f(x)$ over the subintervals of $[0, 1]$. This is easily seen as follows:

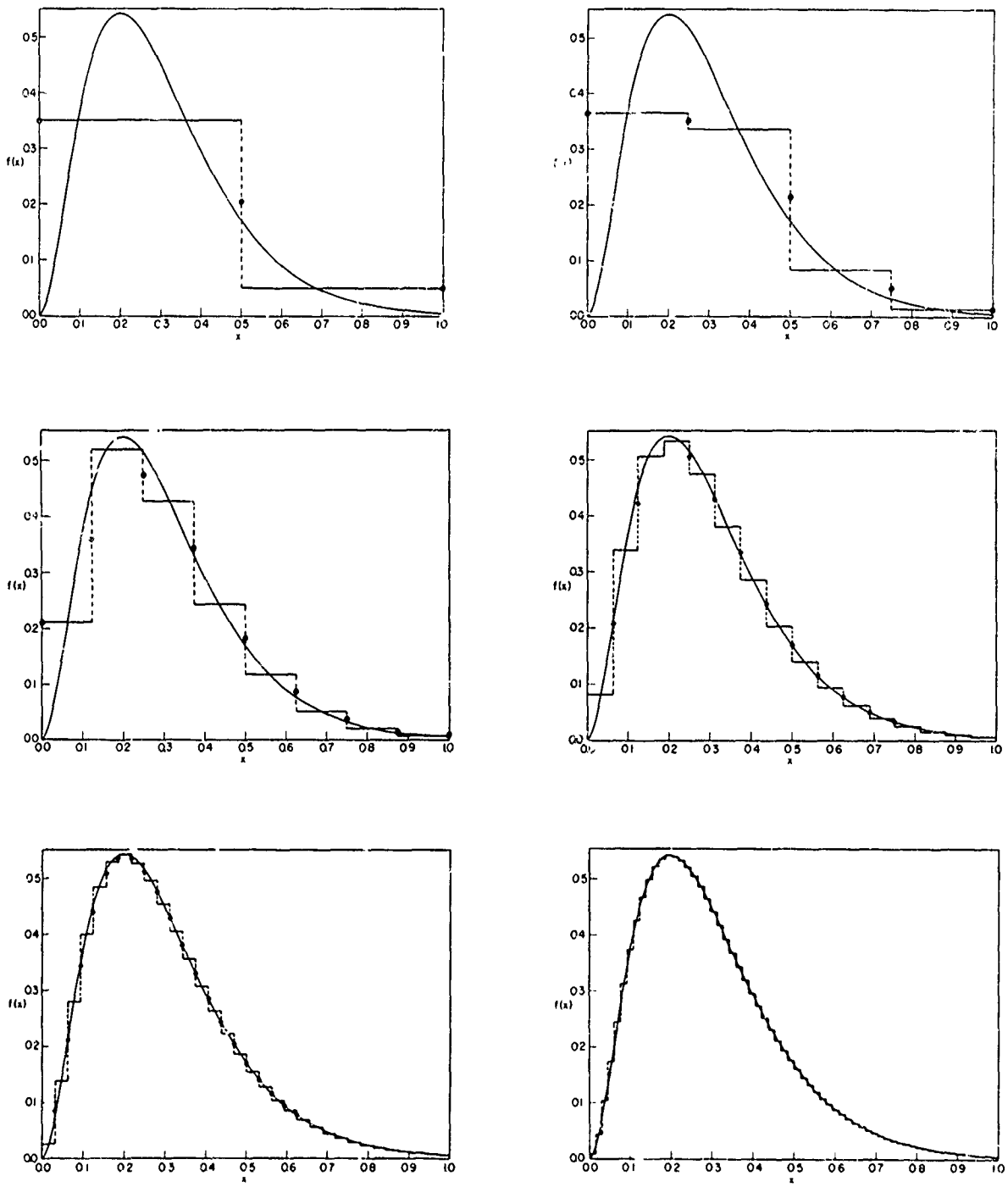


Fig. 2—Six Haar partial sums in the expansion of $f(x) = 100x^2e^{-10x}$

$$c_\ell^m = \int_0^1 f(x)\varphi_\ell^m(x)\,dx$$

$$= 2^{(\ell-1)/2}\left[\int_{(2m-2)/2^\ell}^{(2m-1)/2^\ell} f(x)\,dx - \int_{(2m-1)/2^\ell}^{2m/2^\ell} f(x)\,dx\right] \tag{6a}$$

$$= 2^{-(\ell+1)/2}\left[\bar{f}\left(\frac{2m-2}{2^\ell}, \frac{2m-1}{2^\ell}\right) - \bar{f}\left(\frac{2m-1}{2^\ell}, \frac{2m}{2^\ell}\right)\right], \tag{6b}$$

where $\bar{f}(a, b)$ is the mean value of $f(x)$ in the interval $(a, b)$. Thus $c_\ell^m$ is proportional to the difference in the mean value of $f(x)$ over adjacent subintervals of length $1/2^\ell$. Stated differently, $c_\ell^m$ is proportional to the difference of two adjacent steps of $S_\ell(x)$, namely the steps on either side of $x = (2m - 1)/2^\ell$.

### 2.4 Approximation Accuracy

For continuous functions with a bounded first derivative that exists everywhere, there is a simple estimate of the accuracy of any Haar partial sum. For any $x$ in the interval $[0, 1]$,

$$|S_N(x) - f(x)| \leqslant \frac{\max[f'(x)]}{2^N}, \tag{7}$$

where $\max[f'(x)]$ is the maximum absolute value of the first derivative of $f(x)$ in $[0, 1]$. If $x$ is restricted to any specific step of $S_N$, then Eq. (7) still holds, with $x$ restricted to the subinterval of the step. For large values of $N$, the following approximate estimate holds:

$$|S_N(x) - f(x)| < \frac{|f'(x)|}{2^{N+1}}, \tag{8}$$

## 3. CALCULATION OF THE HAAR TRANSFORM

### 3.1 Modified Haar Transform

Consider a waveform $f(t)$ in the interval $[0, T]$. We divide the interval into $n = 2^N$ equal parts and denote the average value of $f(t)$ in these subintervals by $x_1, x_2, \ldots, x_n$. The step function that has the value $x_k$ in the interval $\left((k - 1)T/2^N, kT/2^N\right)$ is the $N$th Haar partial-sum approximation to $f(t)$. It is the best step-function approximation of $f(t)$ in the mean-square-error sense.

This step function can be obtained as follows. The waveform $f(t)$ is passed through an integrator that resets to zero every $T/2^N$. The electrical parameters of the integrator are chosen so that the integral after a period $T/2^N$ is the mean value of $f(t)$ during that period. The output from the integrator is sampled and held for a period of $T/2^N$. The output of the sample and hold during every period $T$ is therefore the Haar-series partial sum $S_N$ delayed by $T/2^N$. The values $x_1, x_2, \ldots, x_n$ are then obtained for use in digital computations by means of an analog-to-digital converter.

The combination of integrator and sample and hold may be recognized as the low-pass sequency filter described by Harmuth in discussing applications of Walsh functions (9,10). Thus the output in one unit of time of a low-pass sequency filter with cutoff sequency $n = 2^N$ is the Haar-series partial sum $S_N$. This is an indication of the close relationship between Walsh functions and Haar functions. (Walsh functions may be written as simple linear combinations of Haar functions.)

Since our digital samples $x_i$ are average values of $f(t)$ in intervals of $T/2^N$, we see from Eqs. (6a) and (6b) that the $2^N$-point Haar transform is easily obtained from them. We note that the calculation of $c_\ell^m$ would be simplified if it did not involve multiplications by the variable factor $2^{(\ell-1)/2}$ or $2^{-(\ell+1)/2}$. Many applications can use a modified transform in which these factors are dropped or replaced by a constant. We therefore define the modified Haar transform as follows:

$$k_\ell^m = 2^{(2N-\ell+1)/2} c_\ell^m .$$

For $\ell = N$, this corresponds to dropping the leading factor in Eq. (6b). For $\ell < N$, it corresponds to replacing the leading factor in Eq. (6a) with the constant $2^N$, which is needed to compensate for the fact that the initial samples are averages over intervals of length $1/2^N$ (where $T = 1$).

To illustrate the modified Haar transform, we discuss the case of $2^3 = 8$ points. The brute-force calculation then proceeds as follows:

$$k_0 = x_1 + x_2 + x_3 + x_4 + x_5 + x_6 + x_7 + x_8$$

$$k_1^1 = x_1 + x_2 + x_3 + x_4 - x_5 - x_6 - x_7 - x_8$$

$$k_2^1 = x_1 + x_2 - x_3 - x_4$$

$$k_2^2 = x_5 + x_6 - x_7 - x_8$$

$$k_3^1 = x_1 - x_2$$

$$k_3^2 = x_3 - x_4$$

$$k_3^3 = x_5 - x_6$$

$$k_3^4 = x_7 - x_8$$

This requres 24 additions. In general, $n \log_2 n$ additions are required for an $n = 2^N$-point transform. By comparison, the brute-force Walsh transform requires $n(n - 1)$ additions, where we have counted subtractions as additions.

As in the Fourier and Walsh transforms, a fast transform results from the proper grouping of terms. In the case of the modified Haar transform, sums and differences are calculated at each stage:

$$k_3^1 = x_1 - x_2 \qquad a_1 = x_1 + x_2$$

$$k_3^2 = x_3 - x_4 \qquad a_2 = x_3 + x_4$$

$$k_3^3 = x_5 - x_6 \qquad a_3 = x_5 + x_6$$

$$k_3^4 = x_7 - x_8 \qquad a_4 = x_7 + x_8$$

$$k_2^1 = a_1 - a_2 \qquad b_1 = a_1 + a_2$$

$$k_2^2 = a_3 - a_4 \qquad b_2 = a_3 + a_4$$

$$k_1^1 = b_1 - b_2$$

$$k_0 = b_1 + b_2$$

This requires only 14 additions. The general requirement is $2(n - 1)$ additions. Use of an arithmetic element that produces both sum and difference reduces this to $n - 1$ operations. By comparison, the fast Walsh transform takes $n \log_2 n$ additions.

The modified Haar transform is sufficient for an application such as pattern recognition. No information is lost by modifying the leading factors in Eqs. (6a) and (6b), since the correct factor, which is given by the identity of the coefficient, can always be reinserted. Use of the modified transform in applications that involve operations on the coefficients themselves may lead to difficulties. However, in many cases we should be able to analyze the problem in terms of the unnormalized set of functions

$$f_0 = \varphi_0, f_\ell^m = 2^{(2N-\ell+1)/2}\varphi_\ell^m,$$

for which the modified Haar transform is correct.

We should be careful when using the modified Haar transform in applications that require its transmission over a noisy channel. Depending on the coding technique and on the nature of the channel, use of the modified transform can result in unequal errors for different coefficients. This is because unequal energy may be used to transmit different coefficients.

### 3.2 Complete Haar Transform

When required, the complete Haar transform can be obtained by multiplying the coefficients of the modified transform by the correct factor $c_u^v = 2^{-(2N-u+1)/2} k_u^v$. We note that if $u$ is odd, then $p = (2N - u + 1)/2$ is an integer. The multiplication by $1/2^p$ can therefore be accomplished by a $p$-bit right shift of $k_u^v$, assuming a binary representation. If $u$ is even, then $(2N - u + 1)/2 = q - (1/2)$, where $q = N - (u/2) + 1$ is an integer. In this case, multiplication by $\sqrt{2}/2^q$ can be accomplished with a $q$-bit right shift following a multiplication by $\sqrt{2}$.

A multibit shift is therefore required for every coefficient but $c_0$. Thus for a transform of $n = 2^N$ points, $n - 1$ multibit shifts are required. Multiplication by $\sqrt{2}$ is necessary only if $N \geqslant 2$. The number required depends on the parity of $N$. If $N$ is odd, $(n - 2)/3$ shifts are required. If $N$ is even, $2(n - 1)/3$ shifts are required.

We can take advantage of the fact that all multiplications involved in the transform are by a constant factor, namely $\sqrt{2}$. We note that

$$1 + \frac{1}{4} + \frac{1}{8} + \frac{1}{16} = 1.4375, \tag{9}$$

which is within about 2% of $\sqrt{2}$. Thus, $k\sqrt{2}$ can be approximated by $k + (k/4) + (k/8) + (k/16)$, which can be obtained with three additions and three shifts. The $2(n - 1)/3$ multiplications required for the even transform can therefore be accomplished with $2(n - 1)$ adds and $2(n - 1)$ shifts. The $(n - 2)/3$ multiplications required for the odd transform take $n - 2$ adds and shifts. The total computational requirements for the Walsh and Haar transforms are summarized in Table 1.

Table 1
Computational Requirements for $n = 2^N$-point
Walsh and Haar Transforms

| Transform | Adds | Multibit Shifts |
|---|---|---|
| Walsh | $n(n-1)$ | 0 |
| Fast Walsh | $n \log_2 n$ | 0 |
| Modified Haar | $n \log_2 n$ | 0 |
| Modified Fast Haar | $2(n-1)$ | 0 |
| Complete Fast Haar ($N$ even) | $4(n-1)$ | $3(n-1)$ |
| Complete Fast Haar ($N$ odd) | $3n-4$ | $2n-3$ |

It is important to note that in the fast Haar transforms, the average number of operations per point is independent of the transform size. For example, only two additions per

point are required in the modified fast transform. In both the fast Fourier and fast Walsh transforms, the average number of operations per point increases as $\log_2 n$. For these transforms, the speed required of the arithmetic unit is a function both of the data rate and of the transform size. For the fast Haar transform, on the other hand, the speed required of the arithmetic unit is determined by the data rate alone. The only limitation on transform size is that imposed by the amount of available storage. If the application is such that the $n = 2^N$ sample points are located in memory prior to the transform, then these $n$ locations are sufficient to complete the transform. If the samples are accepted one at a time from an external source and if the transformed coefficients can be put out immediately after calculation, then the memory requirement is reduced to $\log_2 n = N$. This is done by storing partial sums only as long as they are needed and by calculating each coefficient whenever sufficient data are present. For example, the order of calculation in the $2^3 = 8$-point example discussed earlier is as follows:

$$k_3^4, a_4, k_3^3, a_3, k_2^2, b_2, k_3^2, a_2, k_3^1, a_1, k_2^1, b_1, k_1^1, k_0$$

Here three storage locations are required, since at one stage of the calculation $b_2$, $a_2$, and $a_1$ must be retained. In general, a few locations in addition to $\log_2 n$ may be required, depending on the computer architecture.

## 4. IMPLICATIONS FOR APPLICATIONS

### 4.1 General Remarks

To a large extent, the utility of Walsh functions is based on the ease by which they can be generated digitally and on the ease of digitally performing operations that involve them. Mathematically, this comes from the fact that Walsh functions have a constant value of plus or minus one on each of $2^N$ equal subintervals and that the sequence of values may be derived from the character group of the dyadic group. Haar functions are also constant on each of $2^N$ equal subintervals. However, ignoring normalization constants, on each interval they may have one of three values, plus one, minus one, or zero. Thus binary representation of, generation of, and operations involving Haar functions are not likely to be as convenient as the same aspects of Walsh functions.

This indicates that Haar functions do not have as much potential for practical applications as do Walsh functions. Specifically, they are not likely to be convenient in applications requiring manipulation of the functions. Multiplexing may be an exception. Other possibilities are those applications that do not require direct manipulation but which allow us to exploit the simple properties of Haar partial sums and coefficients. This brings to mind data transmission, image processing, pattern recognition, and related fields.

### 4.2 Data Coding

One way of transmitting information contained in a time-domain waveform segment is to encode the coefficients of an expansion in terms of some set of basis functions. If convergence is rapid, many coefficients are small, and it may be possible to reduce the

transmission bandwidth from that required to send the time-domain signal itself. In addition, if each coefficient contains information on all points, as in the trigonometric Fourier series, then a certain immunity to channel errors results. This was pointed out by Pratt, et al. (11).

A given Haar-series coefficient $c_n^m$ contains information from the interval $\left((2m-2)/2^n, 2m/2^n\right)$. With respect to the partial sum $S_N(x)$, the full set of $2^N$ coefficients may be said to contain a mixture of local and global information. All points contribute to $c_0$ and $c_1^1$, half of the points contribute to $c_2^1$, etc. In general, each point in $[0, 1]$ contributes to between $N$ and $2N$ of the $2^N$ coefficients, depending on the point. As $n$ gets larger, $c_n^m$ depends on a smaller region of $f(x)$.

To see how bandwidth reduction can result, consider the example shown in Fig. 3. The function in Fig. 3a is constant everywhere except in the interval $\left((2m-2)/2^n, 2m/2^n\right)$. The $n$th partial Haar sum is shown in Fig. 3b. Of the $2^n$ coefficients in $S_n$, only two, $c_0$ and $c_n^m$, are nonzero. In general, assuming a $2^n$-point transform, if a function is constant throughout the interval $\left((k-1)/2^\ell, k/2^\ell\right)$, where $\ell \leqslant n-1$, then

$$\sum_{i=0}^{n-1-\ell} 2^i = 2^{n-\ell} - 1$$

coefficients are identically zero.

The potential of Haar functions for bandwidth reduction is summarized in a general way by Eqs. (6a) and (6b). The coefficients in $S_N$ are proportional to the difference in the mean value of $f(x)$ over adjacent subintervals of width $1/2^k$, $k = 0, 1, 2, \ldots, N$. Data transmission via the Haar transform may be particularly appropriate for pictorial images, which often have relatively large areas of constant or slowly changing tone. Another possibility is the transmission of radar data for remote processing.

### 4.3 Multiplexing

As mentioned in Section 4.1, multiplexing is an application in which the disadvantages of manipulating Haar functions may be outweighed. Irrespective of this, the study of Haar-function multiplexing gives insight into multiplexing in general and into the relationship between Haar functions and other orthonormal systems.

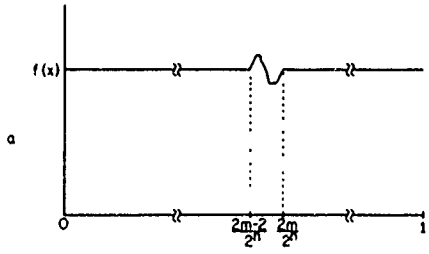


Fig. 3a—A function $f(x)$ that is constant everywhere except in one subinterval

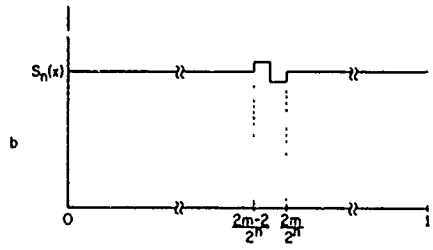


Fig. 3b—A Haar-function approximation to $f(x)$

A method for generating the first $2^N$ Haar functions is shown in Fig. 4. Each subsequence

$$\left\{\varphi_{k+1}^{1}, \varphi_{k+1}^{2}, \ldots, \varphi_{k+1}^{2k}\right\}$$

is generated in an individual stage. The clock rate, initially $2^N/T$, is divided by two between stages. At each stage the clock drives a modulus-$2^k$ counter at the rate $2^k/T$. The output of the counter is fully decoded into $2^k$ lines, each of which is connected to a conversion gate (CG). Each CG has a second input, a square wave of frequency $2^k/T$ which is obtained by toggling a flip-flop at a clock rate $2^{k+1}/T$; this clock rate is available in the previous stage. The CG acts as a logical AND gate, so that the combination of counter and decoder commutates one period of the square wave around $2^k$ output lines.

Conversion from a two-level to a three-level signal takes place in the CG. We assume that the two-level logic is at voltages $O$ and $V$. When the input from the decoder is a logical zero, the CG output is clamped to zero volts. When the input from the decoder is a logical one, the CG output follows the other, square-wave input but shifts the voltage levels from $(O, V)$ to $(-V', V')$. Desired normalization is obtained by adjusting the CG gain. A possible CG circuit is shown in Fig. 5.

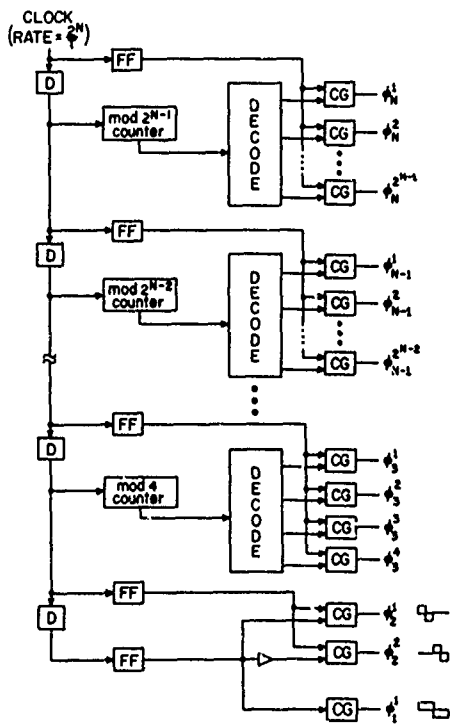


Fig. 4—A method of generating Haar functions. Blocks marked "D" halve the clock rate. Blocks marked "FF" are flip-flops whose outputs invert on receipt of a clock pulse. Blocks marked "DECODER" decode the $k$ outputs of a modulus-$2^k$ counter into $2^k$ output lines. Blocks marked "CG" are conversion gates (see text). An inverter precedes the $\varphi_2^2$ conversion gate.

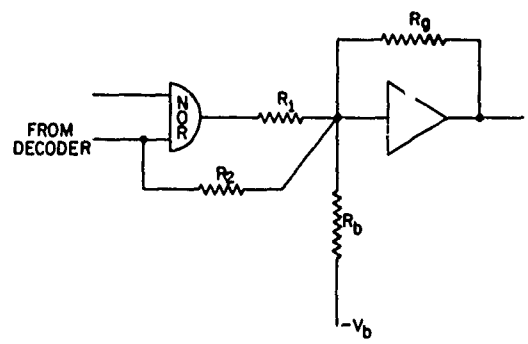


Fig. 5—A possible conversion-gate circuit. Here $R_2 = 2R_1$ and $V/R_2 = -V_b/R_b$. The resistor $R_g$ is adjusted to provide the desired gain. The use of this circuit requires that the decoder lines be inverted.

Multiplexing with Haar functions is conveniently discussed in terms of the technique shown in Fig. 6. Each of the $2^N$ input channels goes through a low-pass sequency filter of the type described in Section 3.1. The output of each filter is a piecewise-constant function with steps of width $T'$. This is multiplied by one of the $2^N$ functions $f_i$. The output from the multipliers are added to form the multiplexed signal. An alternative to using the low-pass sequency filters on each channel is to sample the input waveform directly. However, the output of each sequency filter is the best step-function approximation to the input waveform in the mean-square-error sense, whereas the step functions produced by direct sampling is not. Since the approximation will be corrupted by noise in the multiplex channel, it is better to start with the sequency-filter outputs. Furthermore, if the input to each channel is itself a signal plus zero mean noise, then the low-pass sequency filters will integrate the noise over intervals of length $T'$.

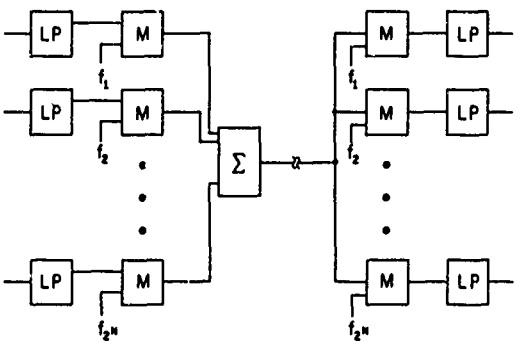


Fig. 6—A generic multiplexing and demultiplexing system with $2^N$ channels. Each channel goes through a low-pass sequency filter of the type described in Section 3. The output of each filter, a piecewise-constant function with steps of width $T'$, is multiplied by one of $2^N$ functions $f_i$ which are orthonormal and have period $T'$. The outputs of the multipliers are added to form the multiplexed signal. Demultiplexing is performed by reversing this multiplexing procedure. Clocking, not shown, is synchronous for all filters and multipliers.

The multiplexing functions $f_i$ are periodic in $T'$ are are orthonormal in a single frame

$$\int_0^{T'} f_i(t) f_j(t)\, dt = \delta_{ij}. \tag{10}$$

Orthogonality is required if the multiplexed signal is to be demultiplexed. Normalization results in the transmission of equal energy in all channels. given equal input signals. Defining a frame as any segment of time during which the filter outputs remain constant, the multiplexed signal is given in any frame by

$$g(t) = \sum_{i=1}^{2^N} c_i f_i(t), \tag{11}$$

where $t$ goes from 0 to $T'$ and is relative to the start of the frame. The coefficients $c_i$ are output values of the $2^N$ filters.

It is important to realize that time-division multiplexing (TDM) and sequency-division multiplexing (SDM) are the results of specific choices of the multiplexing functions $f_i$. In fact, we can choose functions that result in a combination of TDM and SDM. To see this, we consider the three sets of functions shown in Figs. 7-9. The block functions in Fig. 7 will result in pure TDM. The Walsh functions in Fig. 8 will result in pure SDM. The Haar functions in Fig. 9 will result in something between TDM and SDM. Most channels will be separated from some others in time and from still others in sequency. This is an example of the lesson, first learned in connection with pulse-compression radar, that the coding of information in the time or sequency (frequency) domain is not an either-or situation.

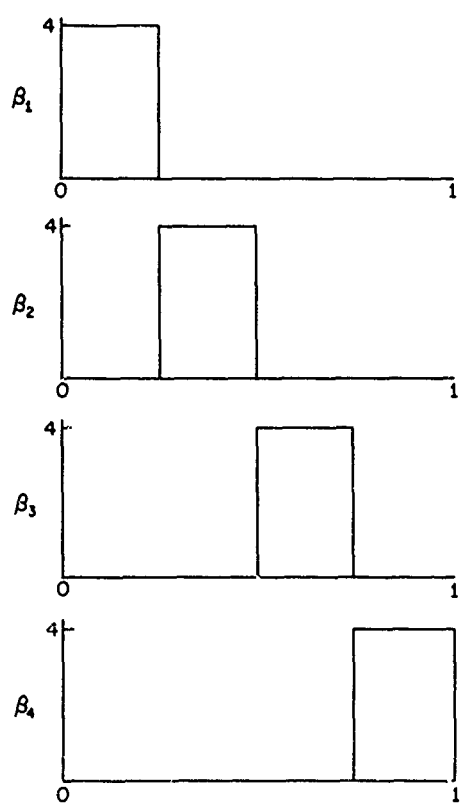


Fig. 7—Four block functions whose use as multiplexing function results in pure TDM

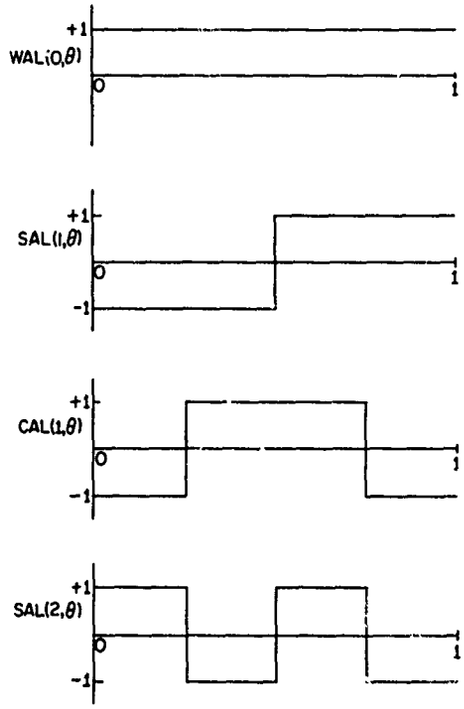


Fig. 8—The first four Walsh functions. Their use as multiplexing functions results in pure SDM.

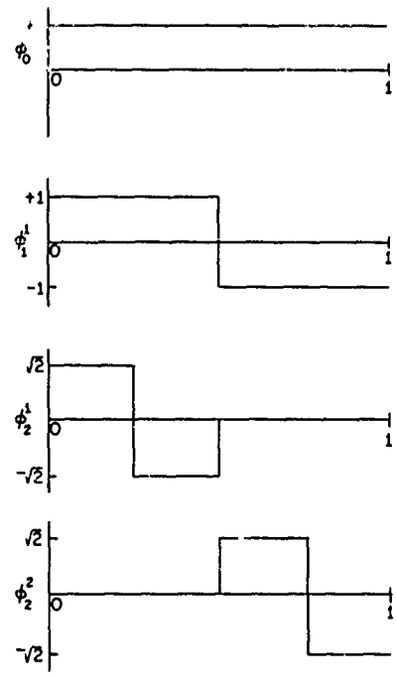


Fig. 9—The first four Haar functions. Their use as multiplexing functions results in a combination of TDM and SDM.

Many properties of Haar-function multiplexing lie between those of SDM and TDM. Whether we view this as combining the advantages of both or just their disadvantages depends on our view of nature. In any case, as an example we shall calculate the peak- to rms-voltage ratio and peak- to average-power ratio for SDM, TDM, and Haar multiplexing.

Beginning with Eq. (11), the instantaneous power is given by

$$g^2(t) = \sum_{ij} c_i c_j f_i(t) f_j(t). \tag{12}$$

If we restrict the choice of multiplexing functions to those which are piecewise constant in equal intervals, or slots, of width $T'/2^N$, the energy transmitted in one frame is

$$E = \sum_{k=1}^{2^N} \frac{T'}{2^N} g^2(t_k), \tag{13}$$

where we have defined $t_k = (k - (1/2))T'/2^N$. Thus

$$E = \frac{T'}{2^N} \sum_{kij} c_i c_j f_i(t_k) f_j(t_k)$$

$$= \sum_{ij} c_i c_j \frac{T'}{2^N} \sum_k f_i(k) f_j(t_k). \tag{14}$$

Now for piecewise-constant functions, the orthonormality relation, Eq. (10), becomes

$$\frac{T'}{2^N} \sum_{k=1}^{2^N} f_i(t_k) f_j(t_k) = \delta_{ij}. \tag{15}$$

Thus

$$E = \sum_{ij} c_i c_j \delta_{ij}$$

$$= \sum_i c_i^2. \tag{16}$$

The average power in the frame is

$$\overline{P} = \frac{E}{T'} = \frac{1}{T'} \sum_{i=1}^{2^N} c_i^2. \tag{17}$$

The power averaged over many frames depends on the statistics of the input channels $c_i$. However, whatever this average is, Eq. (17) shows that it is the same for all systems of orthonormal multiplexing functions. The rms voltage is also the same and is given by

$$V_{\text{rms}} = \left[ \frac{1}{T'} \sum_{i=1}^{2^N} c_i^2 \right]^{1/2}. \tag{18}$$

To compare the peak voltage and power, we must determine for each set of functions $f_i$ which of the $2^N$ values of

$$\xi(t_k) = \sum_i c_i f_i(t_k) \tag{19}$$

and

$$g^2(t_k) = \sum_{ij} c_i c_j f_i(t_k) f_j(t_k) \tag{20}$$

are the highest. For convenience, we set $T' = 1$.

The TDM orthonormal block functions satisfy

$$f_i(t_k) = 2^{N/2}\delta_{ik}\,. \tag{21}$$

Thus

$$\begin{aligned} g(t_k) &= 2^{N/2} \sum_i c_i \delta_{ik} \\ &= 2^{N/2} c_k\,, \end{aligned} \tag{22}$$

and

$$\begin{aligned} g^2(t_k) &= 2^N \sum_{ij} c_i c_j \delta_{ik} \delta_{jk} \\ &= 2^N c_k^2\,. \end{aligned} \tag{23}$$

The peak voltage in any frame is proportional to the highest signal level of all the channels; the peak power is proportional to the square. If we assume that the input channels have signal values ranging between 0 and 1 V, then the absolute peak voltage is

$$V_{\max}^{(\mathrm{TDM})} = 2^{N/2}, \tag{24}$$

and the absolute peak power is

$$P_{\max}^{(\mathrm{TDM})} = 2^N. \tag{25}$$

Turning to SDM, we note that if the $f_i$ are the first $2^N$ Walsh functions, then for $n = 2^{N-1} + 1$, $f_i(t_n) = 1$, where $i = 1, 2, 3, \ldots, 2^N$. The peak voltage and power in each frame occur in this slot and are given by

$$g(t_n) = \sum_i c_i \tag{26}$$

and

$$g^2(t_n) = \sum_{ij} c_i c_j = \left( \sum_i c_i \right)^2 . \tag{27}$$

The absolute peaks are reached when all channels are at their maximum signal level 1, so that

$$V_{\max}^{(\mathrm{SDM})} = 2^N \tag{28}$$

and

$$P_{\max}^{(\mathrm{SDM})} = 2^{2N}. \tag{29}$$

To consider the voltage and power peaks for Haar multiplexing, we rewrite Eq. (19) in the more natural form

$$g(t_k) = c_0 + \sum_{n=1}^{N} \sum_{m=1}^{2^{n-1}} c_n^m \varphi_n^m(t_k). \tag{30}$$

In any frame the peak is reached in the first slot where all functions that contribute to the sum have a positive sign. The peak voltage in any frame is therefore

$$\begin{aligned} g(t_i) &= c_0 + \sum_{n=1}^{N} c_n^1 \varphi_n^1(t_i) \\ &= c_0 + \sum_{n=1}^{N} 2^{(n-1)/2} c_n^1. \end{aligned} \tag{31}$$

The peak power is

$$g^2(t_1) = \left[ c_0 + \sum_{n=1}^{N} 2^{(n-1)/2} c_n^1 \right]^2 . \tag{32}$$

The absolute peaks will be reached when the $N + 1$ channels $c_0, c_1^1, c_2^1, \ldots, c_N^1$ are at their peak signal. In this case

$$V_{\max}^{(H)} = 1 + \sum_{n=1}^{N} 2^{(n-1)/2}$$

$$= 1 + \frac{2^{N/2} - 1}{\sqrt{2} - 1}, \tag{33}$$

and

$$P_{\max}^{(H)} = \left(1 + \frac{2^{N/2} - 1}{\sqrt{2} - 1}\right)^2. \tag{34}$$

Summarizing Eqs. (17), (18), (24), (25), (28), (29), (33), and (34), SDM has the highest peak- to rms-voltage ratio and peak- to average-power ratio; TDM has the lowest, and those for Haar multiplexing are in between. For large $N$

$$V_{\max}^{(H)} \approx 2.5\, V_{\max}^{(TDM)}. \tag{35}$$

This ordering is intuitively correct. For the TDM system to reach its peak, only one of the $2^N$ channels need be at its maximum. For the SDM, all $2^N$ channels must be at their maxima, which is not nearly as likely. As a result, in SDM the average value is further below its peak than in TDM. The Haar-function multiplexer will reach its peak if $N + 1$ particular channels are at their maxima. This is less likely than one channel reaching its maximum but more likely than all $2^N$ channels doing so.

One consequence of the preceding results is that for a given signal-to-noise ratio, multiplexing with Haar functions requires less dynamic range than with Walsh functions. In addition, crosstalk problems may be less severe.

As a final point, we note that demultiplexing is equivalent to recovering the coefficients in Eq. (19). Instead of using the analog technique shown in Fig. 6, this can be accomplished by taking the digital transform of the multiplexed signal in terms of the functions $f_i$. This is particularly easy with Haar functions, as discussed in Section 3. The result is more accurate and may even be cheaper. It is especially appropriate to take the digital transform if a computer is already available at the demultiplexing side; in modern communication systems this is often the case.

### 4.4 Pattern Recognition; Edge Detection

The property described by Eq. (6) also suggests that the Haar transform should be useful in edge detection, an important operation in certain pattern-recognition techniques. As a simple example, consider the function shown in Fig. 10, which has a single step at the point $x_1$. If $x_1$ is a binary-irrational point, then for any $n$, only one of the $2^{n-1}$ coefficients $c_n^m$ is nonzero. The identity of the coefficient $m$ locates the edge to within $1/2^{n-1}$. Taking the sign of the coefficient into account improves the resolution to $1/2^n$. If $x_1$ is the binary-rational point $x_1 = k/2^N$, then $S_N(x) = f(x)$, and all $c_n^m = 0$ for

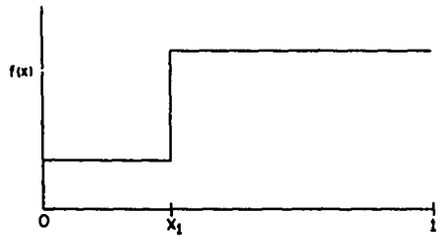


Fig. 10—A function with a single edge

$n > N$. For $n < N$, the previous remarks apply. When $n = N$, the identity of the nonzero coefficient $c_n^m$ locates the edge exactly.

### 4.5 Information Theory

The possibility that the Haar transform might be useful in information theory is suggested by the simplicity of the sampling theorem. We recall from Section 2.3 that $S_N$ contains $2^N$ terms and is a step function of $2^N$ equal-length steps. It follows that a function with a Haar "bandwidth" of $2^N$ must be sampled in intervals of $1/2^N$ if all information is to be recovered.

Again referring to Eq. (6), we note that the Haar transform may be of particular interest when the information content of a waveform is related to changes in the amplitude of the waveform rather than to the amplitude itself. In this connection, we rewrite Eq. (6) as follows:

$$c_n^m \propto \frac{1}{L}\int_a^b f(x)\,dx - \frac{1}{L}\int_b^c f(x)\,dx, \tag{36}$$

where $b - a = c - b = L = 1/2^N$ and $a$, $b$, and $c$ are functions of $m$. This in turn can be rewritten as

$$c_n^m \propto \frac{1}{L}\int_a^b [f(x) - f(x + L)]\,dx, \tag{37}$$

so that $c_n^m$ gives the average change in a function between adjacent intervals of width $L = 1/2^n$.

## 5. CONCLUSION

It is unlikely that Haar functions can be as useful in any many applications as Walsh functions appear to be. However, they seem particularly well-suited for applications such as data coding, pattern recognition, and perhaps, multiplexing.

## 6. ACKNOWLEDGMENTS

The author thanks W. Smith and B. Wald for helpful discussions relating to Section 4.3. The circuit in Fig. 5 is due to W. Smith, and the expansion in Eq. (9) was suggested by Y. S. Wu. The author is especially grateful to J. S. Lee for reviewing the manuscript and offering many valuable suggestions.

## REFERENCES

1. J.L. Walsh, "A Closed Set of Normal Orthogonal Functions," Amer. J. Math. 55, 5 (1923).
2. H.F. Harmuth, *Transmission of Information by Orthogonal Functions*, Springer-Verlag, New York, 1969.
3. *Proceedings of the Applications of Walsh Functions Symposium and Workshop, March 31-April 3, 1970*, AD-707 431, Naval Research Laboratory.
4. *Proceedings of the Applications of Walsh Functions Symposium, April 13-15, 1971*, AD-727 000, Washington, D.C.
5. A. Haar, "Zur Theorie der orthogonalen Funktionensysteme," *Mathematische Annalen* 69, 331 (1910)
6. H.C. Andrews and W.K. Pratt, "Digital Image Transform Processing," in *Proceedings of the Applications of Walsh Functions Symposium and Workshop*, Naval Research Laboratory, Washington, D.C., 1970, p. 183.
7. H.C. Andrews, "Walsh Functions in Image Processing, Feature Selection and Pattern Recognition," in *Proceedings of the Applications of Walsh Functions Symposium and Workshop*, Naval Research Laboratory, Washington, D.C., 1970, p. 26.
8. J.E. Shore & R.L. Berkowitz, "Convergence Properties of Haar Series," NRL Report 7470, Jan. 1973.
9. H. Harmuth, "Sequenz-Multiplexsysteme für Telephonie- und Datenübertragung. 1. Quadraturmodulation," Archiv der elektrischen Übertragung 22, No. 1, 27 (1968). (Available as Naval Research Laboratory Translation No. 1163.)
10. H. Harmuth, "Survey of Analog Filters Based on Walsh Functions," in *Proceedings of the Applications of Walsh Functions Symposium and Workshop*, Naval Research Laboratory, Washington, D.C., 1970, p. 208.
11. W.K. Pratt, et al., "Hadamard Transform Image Coding," Proc. IEEE 57, No. 1, 58 (1969).