AD-754 602

ADVANCED HYDROFLUIDIC STABILIZATION SYSTEM

Mark E. Ebsen, et al

Honeywell, Incorporated

Prepared for:

Army Air Mobility Research and Development Laboratory

October 1972

DISTRIBUTED BY:

NTIS

National Technical Information Service
U. S. DEPARTMENT OF COMMERCE
5285 Port Royal Road, Springfield Va. 22151

AD754602

AD

USAAMRDL TECHNICAL REPORT 72-46

ADVANCED HYDROFLUIDIC STABILIZATION SYSTEM

By

Mark E. Ebsen

James O. Hedeen

October 1972

EUSTIS DIRECTORATE
U. S. ARMY AIR MOBILITY RESEARCH AND DEVELOPMENT LABORATORY
FORT EUSTIS, VIRGINIA

CONTRACT DAAJ02-71-C-0040

HONEYWELL INC.

MINNEAPOLIS, MINNESOTA

Reproduced by
NATIONAL TECHNICAL
INFORMATION SERVICE
U S Department of Commerce
Springfield VA 22151

Approved for public release;
distribution unlimited.

U S ARMY MATERIEL COMMAND

DDC
RECEIVED
JAN 29 1973
B

149

DISCLAIMERS

The findings in this report are not to be construed as an official Department of the Army position unless so designated by other authorized documents.

When Government drawings, specifications, or other data are used for any purpose other than in connection with a definitely related Government procurement operation, the United States Government thereby incurs no responsibility nor any obligation whatsoever; and the fact that the Government may have formulated, furnished, or in any way supplied the said drawings, specifications, or other data is not to be regarded by implication or otherwise as in any manner licensing the holder or any other person or corporation, or conveying any rights or permission, to manufacture, use, or sell any patented invention that may in any way be related thereto.

Trade names cited in this report do not constitute an official endorsement or approval of the use of such commercial hardware or software.

DISPOSITION INSTRUCTIONS

Destroy this report when no longer needed. Do not return it to the originator.

ACCESSION for
NTIS White Section
DDC Buff Section
UNANNOUNCED
JUSTIFICATION
BY
DISTRIBUTION/AVAILABILITY CODES
Dist. AVAIL. and/or SPECIAL
A

Task 1F162204AA4404
Contract DAAJ02-71-C-0040
USAAMRDL Technical Report 72-46
October 1972

ADVANCED HYDROFLUIDIC STABILIZATION SYSTEM

Final Report

Honeywell Document W0502-FR

by

Mark E. Ebsen
James O. Hedeen

Prepared by

Honeywell Inc.
Government and Aeronautical Products Division
Minneapolis, Minnesota

for

EUSTIS DIRECTORATE
U.S. ARMY AIR MOBILITY RESEARCH AND DEVELOPMENT LABORATORY
FORT EUSTIS, VIRGINIA

Approved for public release; distribution unlimited.

Unclassified
Security Classification

DOCUMENT CONTROL DATA - R & D

(Security classification of title, body of abstract and indexing annotation must be entered when the overall report is classified)

1. ORIGINATING ACTIVITY *(Corporate author)* Honeywell Inc. 2600 Ridgway Parkway N. E. Minneapolis, Minnesota	2a. REPORT SECURITY CLASSIFICATION Unclassified 2b. GROUP -

3. REPORT TITLE

ADVANCED HYDROFLUIDIC STABILIZATION SYSTEM

4. DESCRIPTIVE NOTES *(Type of report and inclusive dates)*

Final Technical Report - 23 April 1971 through 23 April 1972

5. AUTHOR(S) *(First name, middle initial, last name)*

Mark E. Ebsen, James O. Hedeen

6. REPORT DATE October 1972	7a. TOTAL NO. OF PAGES ~~148~~ 149	7b. NO. OF REFS 7

8a. CONTRACT OR GRANT NO. DAAJ02-71-C-0040 b. PROJECT NO. c. Task 1F162204AA4404 d.	9a. ORIGINATOR'S REPORT NUMBER(S) USAAMRDL Technical Report 72-46 9b. OTHER REPORT NO(S) *(Any other numbers that may be assigned this report)* Honeywell Inc. Report W0502-FR

10. DISTRIBUTION STATEMENT

Approved for public release; distribution unlimited.

11. SUPPLEMENTARY NOTES	12. SPONSORING MILITARY ACTIVITY Eustis Directorate, U.S. Army Air Mobility Research and Development Laboratory, Fort Eustis, Virginia

13. ABSTRACT

The results of a design study to define and analyze a hydrofluidic flight control system for helicopters, incorporating pilot relief modes, are presented. The system defined provides the pilot with stability augmentation in three axes, over the total aircraft flight envelope, and with pitch and roll attitude hold, heading hold, and altitude hold over the normal range of cruise airspeeds. To obtain a relatively simple, low-cost system, control panel switching, electrical display gyros for attitude and heading signals, and series servoactuators for both stability augmentation and outer-loop modes are used. The study results indicate that a simple hydrofluidic flight control system which will provide significant relief for the pilot can be mechanized. The components of this system are within the present state of the art, and the mechanical and hydraulic installation is similar to that demonstrated during earlier flight tests.

DD FORM 1 NOV 65 1473 REPLACES DD FORM 1473, 1 JAN 64, WHICH IS OBSOLETE FOR ARMY USE.

Unclassified
Security Classification

Unclassified

Security Classification

14. KEY WORDS	LINK A ROLE	LINK A WT	LINK B ROLE	LINK B WT	LINK C ROLE	LINK C WT
Fluidics						
Aircraft handling qualities						
Analog computer simulation						
Pitch-axis controller						
Roll-axis controller						
Yaw-axis controller						
Flight control system						
Helicopter						

Unclassified

Security Classification

10167-72

DEPARTMENT OF THE ARMY
U. S. ARMY AIR MOBILITY RESEARCH & DEVELOPMENT LABORATORY
EUSTIS DIRECTORATE
FORT EUSTIS, VIRGINIA 23604

This report has been reviewed by the Eustis Directorate, U.S. Army Air Mobility Research and Development Laboratory and is considered to be technically sound.

The purpose of the program was to define and analyze the next-generation fluidic flight control system for helicopters. This involves the extension of the three-axis hydrofluidic stability augmentation system by incorporating pilot relief modes of pitch and roll attitude hold, heading hold, and altitude hold.

The report is published for the exchange of information and appropriate application. The technical monitor for this contract was Mr. George W. Fosdick, Aeromechanics Division.

FOREWORD

This study was conducted under Army Contract DAAJ02-71-C-0040, "Advanced Hydrofluidic Stabilization System," and was authorized by DA Task 1F162204AA4404. The work was administered under the direction of the Eustis Directorate, U.S. Army Air Mobility Research and Development Laboratory, Fort Eustis, Virginia. Mr. G.W. Fosdick was the project monitor. The work was conducted during the period 23 April 1971 through 23 April 1972.

This report was prepared by the AFS Fluidic Systems Group of the Government and Aeronautical Products Division, Honeywell Inc., Minneapolis, Minnesota.

TABLE OF CONTENTS

		Page
ABSTRACT		iii
FOREWORD		v
LIST OF ILLUSTRATIONS		x
LIST OF TABLES		xiii
LIST OF SYMBOLS		xiv
SECTION I	INTRODUCTION	1
SECTION II	SYSTEM CONCEPT	3
	Design Objective	3
	Modes of Operation	3
	Service Flight Envelope	4
	System Description	4
	Stability Augmentation System	7
	Attitude Hold Modes	7
	Heading Hold Mode	8
	Altitude Hold Mode	8
	System Components	8
	Control Panel	8
	Attitude References	9
	Electrical Interface Unit	9
	Fluidic Computer Assembly	9
	Altitude Error Sensor	9
	Series Servoactuators	10
SECTION III	SYSTEM DESIGN AND ANALYSIS	11
	FSAS Description	11
	Pilot Assist Modes	12
	Roll Attitude Hold	14
	Pitch Attitude Hold	19
	Heading Hold	28
	Heading Select	33
	Altitude Hold	38
	Series Servoactuator Displacement Limits	50
	Range Requirements	50
	Failure Effects	50
	Effects of Servoactuator Hitting Limits	52

Preceding page blank

Page

SECTION IV SYSTEM MECHANIZATION 54

Yaw Axis 54
Roll Axis 54
Pitch Axis 57
Function Selector 57
System Installation 61
Component Mechanization 61
Temperature Compensation 61

SECTION V PERFORMANCE, DESIGN, AND QUALIFICATION REQUIREMENTS FOR AN ADVANCED HYDROFLUIDIC STABILIZATION SYSTEM . . 63

1.0 Scope 63
2.0 Applicable Documents 63
3.0 Requirements 63
3.1 General 63
3.2 Environment 65
3.3 Power Supplies 66
3.4 Detailed Performance Requirements . 66
3.5 System Open-Loop Performance . . . 66
3.6 Component Performance 78
3.7 Performance Under Environmental Conditions 86
3.8 Product Configuration 86
4.0 Quality Assurance 86
4.1 Vibration 86
4.2 Open-Loop Tests 86
4.3 Verification 88

SECTION VI CONCLUSIONS 89

SECTION VII RECOMMENDATION 90

LITERATURE CITED 91

APPENDIXES

I. System Mode Requirements Based on Mission Profiles. 92

II. Mathematical Model -- UH-1C Analog Representation 95

Page

III. Design and Performance Goals for the Advanced Hydrofluidic Stabilization System 105

IV. Fluidic Component Studies 113

DISTRIBUTION 133

LIST OF ILLUSTRATIONS

Figure		Page
1	Lateral-Directional Axes Block Diagram	5
2	Longitudinal-Vertical Axes Block Diagram	6
3	Roll-Axis Pilot Assist Functions	13
4	Pitch-Axis Pilot Assist Functions	13
5	Roll Attitude Hold for 10-Degree Roll Attitude Step Command	16
6	Roll-Axis Engage Transient, 80 Knots	18
7	Pitch Attitude Hold, Pitch Command (θ_c) = 2 Degrees . .	22
8	Pitch Attitude Hold, Vertical Gust = 10 Feet/Second . . .	24
9	Pitch-Axis Engage Transients, 60 Knots	26
10	Pitch-Axis Engage Transients, 80 Knots	27
11	Roll Attitude Hold and Heading Hold, Vertical Gust = 10 Feet/Second	31
12	Heading Hold; Heading Select Maneuver and Lateral Velocity/Initial Condition	32
13	Heading Hold for Heading Select Command to 10 Degrees	35
14	Heading Select Mode Performance	37
15	Altitude Hold, Altitude Command = 50 Feet.	40
16	Altitude Hold, Vertical Gust = 10 Feet/Second	42
17	Roll Attitude Hold and Altitude Hold; Roll Angle Command to +10 Degrees and Then to -10 Degrees	44
18	Heading Hold and Altitude Hold; Heading Select Command to 57.3 Degrees and Then to Zero Degrees	45

Figure		Page
19	Heading Hold and Altitude Hold; Heading Select Command to ±57.3 Degrees	46
20	Yaw-Axis Schematic	55
21	Roll-Axis Schematic	56
22	Pitch-Axis Schematic	58
23	System Electrical Interconnection Diagram	59
24	Yaw-Axis Schematic	69
25	Roll-Axis Schematic	70
26	Yaw-Axis Requirements	71
27	Roll-Axis Pilot Assist Functions	73
28	Pitch-Axis Schematic	76
29	Pitch-Axis Requirements	77
30	System Hydraulic Interconnection Diagram	79
31	System Electrical Interconnection Diagram	80
32	Interface Electronic Circuit Schematic	83
33	UH-1C Moment Equations Simulation	96
34	UH-1C Force Equations Simulation	97
35	Altitude Generator Simulation	98
36	Roll-Axis Controller Simulation	99
37	Pitch-Axis Controller Simulation	100
38	Yaw-Axis Controller Simulation	101
39	Altitude Error Sensor Schematic	114
40	Altitude Error Sensor	114

Figure		Page
41	Altitude Error Sensor Performance	115
42	Fluidic Signal Limiter	118
43	Differential Pressure Gauge.	119
44	Trim Indicator Characteristics	120
45	Trim Actuator Mechanizations	122
46	Series Trim Actuator	124
47	Parallel Trim System	125
48	Negative Feedback Approach to Temperature Compensation	127
49	Temperature-Scheduled Flow Control Valve Schematic	129
50	Temperature-Scheduled Flow Control Valve	130
51	Reduced-Size Amplifier and Rate Sensor Pickoff	132

LIST OF TABLES

Table		Page
I	FSAS Control Laws	12
II	Roll Attitude Hold Performance for 10-Degree Step Command	15
III	Pitch Attitude Hold Performance for 2-Degree Step Command, With Airspeed Compensation	21
IV	Heading Hold Performance Response to 10-Feet/Second Lateral Wind Step Inputs	30
V	Maximum Roll-In and Roll-Out Rates for 57.3-Degree Heading Select Commands	34
VI	Altitude Hold Performance Response to 10-Feet/Second Vertical Wind Step Input	41
VII	Transient and Steady-State Altitude Loss During Turn Maneuvers	47
VIII	Turn Coordination Performance	49
IX	Series Servoactuator Range Requirements	51
X	Angular Rates for Series Servoactuator Failure	52
XI	Component Mechanizations	62
XII	Detailed Performance Requirements	67
XIII	Summary of AFCS Mode Requirements for Three Models	93
XIV	AFCS Control Modes Dictated by Mission Tasks and Free-Vehicle Handling Qualities -- UTTAS/UH-1D	94
XV	Analog Computer Potentiometer Settings	102

LIST OF SYMBOLS

AFCS	automatic flight control system
A_{is}	roll cyclic ram displacement, deg
a_y	lateral acceleration, ft/sec^2
a_z	normal acceleration, ft/sec^2
B_{is}	pitch cyclic ram displacement, deg
d	characteristic amplifier dimension (usually nozzle equivalent diameter), in.
db	decibels
e	2.7314
FSAS	fluidic stability augmentation system
g	acceleration due to gravity, ft/sec^2
gpm	gallons per minute
h	altitude, ft
h_e	altitude error, ft
$\dot{h}$	altitude rate, ft/sec
IAS	indicated airspeed, knots
K	gain, variety of units depending on use in Table XI
K_ϕ	roll attitude gain, rad/rad
$K_{\phi\psi}$	bank to heading gain, rad/rad
m	airplane mass, slugs
N_R	Reynolds number
N_Y	lateral acceleration, g
N_Z	normal acceleration, g

o	used as subscript means initial steady-state conditions
psi	pounds per square inch
q	pitch angular velocity, deg/sec
r	yaw angular velocity, deg/sec
S	Laplace operator
t_{90}	time to reach 90 percent of final value, sec
T	time constant, sec
t_s	solution time, sec
T_ϕ	roll attitude lag time constant, sec
u	X-body-axis perturbation velocity, ft/sec
U	forward velocity, ft/sec
v	Y-body-axis perturbation velocity, ft/sec
V	average supply nozzle velocity, in./sec
w	Z-body-axis perturbation velocity, ft/sec
W	maximum overload gross weight of helicopter, lb
X_{cs}	pitch-axis mechanical cyclic displacement, in.
X_p	yaw-axis mechanical pedal displacement, in.
Y_{cs}	roll-axis mechanical cyclic displacement, in.
ν	kinematic viscosity of fluid, in.^{2}/sec
β	sideslip angle, deg
β_p	peak sideslip angle, deg
β_{ss}	steady-state sideslip angle, deg
$\dot{\beta}$	sideslip rate, deg/sec
ζ_B	boost actuator damping ratio
ζ_s	series servoactuator damping ratio

θ	pitch angle, deg
$\dot{\theta}$	pitch angular rate, deg/sec
θ_{TR}	tail rotor ram displacement, deg
τ	vortex rate sensor transport delay, sec
ϕ	roll angle, deg
ϕ_c	commanded roll angle, deg
ϕ_e	roll angle error, deg
$\dot{\phi}$	roll angular rate, deg/sec
ψ	yaw angle, deg
ψ_c	commanded yaw angle, deg
ψ_e	yaw angle error, deg
$\dot{\psi}$	yaw-axis angular rate, deg/sec
ω_B	boost actuator natural frequency, rad/sec
ω_s	series servoactuator natural frequency, rad/sec

SECTION I
INTRODUCTION

The feasibility of using a hydraulic fluidic control system to provide short-period stability augmentation for the UH-1 class single-rotor helicopter was initially demonstrated in 1968 by actual flight tests of a yaw axis hydrofluidic stability augmentation system (SAS). A three-axis hydrofluidic SAS was subsequently designed and bench tested under Contract DAAJ02-69-C-0036, and the system was installed and flight tested in a UH-1C helicopter under Contract DAAJ02-70-C-0017 in 1970. The results of these programs were sufficiently encouraging to warrant continued development of more advanced fluidic flight control systems, with the objective for the next-generation system being the addition of pilot relief modes to the basic SAS.

The ultimate goal of the present program is to obtain a highly reliable, low-cost flight control system. The objective of this phase is to define and analyze this next-generation fluidic flight control system for helicopters. To do this, a detailed analysis of the vehicle, including a computer simulation, was completed; and a limited amount of development of critical components was performed. The end result of this work is the detailed system specification presented in Section V of this report.

The flight control system defined provides the pilot with stability augmentation in three axes over the total flight envelope, and with pitch and roll attitude hold, heading hold,and altitude hold over the normal range of cruise airspeeds. The defined system design and mechanization are the result of a tradeoff between increased pilot relief and system flexibility and the desire to obtain a simple, low-cost system. The major characteristics of the proposed design and hardware mechanization are:

- Use of control panel switching for system engage/disengage, mode selection,and simple maneuver commands
- Use of the electrical display gyros and electric-to-fluidic transducers to obtain attitude and heading signals
- A hydrofluidic altitude sensor which was designed and tested on this program
- Series servoactuators with the same design, authority, and installation as demonstrated in the earlier three-axis SAS flight test

- Smaller, lower flow fluidic components to reduce system size and flow requirements
- Temperature scheduling of system flow to reduce the variation in system performance with oil temperature change

SECTION II
SYSTEM CONCEPT

DESIGN OBJECTIVE

The proposed system design is the result of considering a number of factors to define a design approach which would best meet the objective of providing a highly reliable, low-cost automatic flight control system (AFCS) incorporating pilot relief modes.

AFCS modes provide pilot assistance in four ways:

1) The AFCS can assist the pilot in the task of precise aircraft control. Stability augmentation, and attitude hold during reconnaissance and armament firing missions, would provide this type of assistance.

2) The AFCS can relieve the pilot of the routine task of maintaining a given flight path so that he can concentrate on the overall mission task. Attitude hold and heading hold modes are typical examples.

3) The AFCS can relieve pilot fatigue by providing such modes as altitude hold.

4) The AFCS can perform certain tasks significantly better than the pilot can.

As increasing the degree of pilot relief and system flexibility provided is generally in contrast to keeping the system simple and low cost, a tradeoff has to be made between the two. The AFCS control modes and features that are considered are those that would be a major benefit to the pilot for the typical observation and transportation missions performed by the UH-1 helicopter. The final selection of the system design is based on the utility of the mode or feature, the frequency of use, and the functional and performance limitations of a hydrofluidic mechanization.

MODES OF OPERATION

Selection of the modes of operation for the system was based on an analysis of mission tasks and the free-vehicle handling qualities of the UH-1 type helicopter, along with the guidelines of keeping the system simple and low cost. A summary of the analysis relating mode

requirements to mission tasks and free-vehicle handling qualities is presented in Appendix I. The hydrofluidic flight control system will be capable of controlling the helicopter in the following modes:

- Stability augmentation (three axis)
- Attitude hold (pitch and roll)
- Heading hold
- Altitude hold

SERVICE FLIGHT ENVELOPE

The flight envelope for operation of the various system modes is based on the flight envelope encompassed by the UH-1 during typical observation and transportation missions and the desired utilization of the modes during the various segments of the mission profile. In general, the baseline system is intended for operation over the range of airpseeds and altitudes at which the UH-1 is flown the majority of the time. Information on the typical flight profiles for the UH-1 type helicopter was obtained from Reference 1. This information indicated that, for the UH-1 type helicopter, over 90 percent of the flying was done at airspeeds above 50 knots and at less than 6000 feet density altitude. Therefore, the following service flight envelope was defined for the system:

- Airspeed: Stability augmentation - Hover to maximum cruise

  Attitude hold - 50 knots to maximum cruise

  Heading and altitude hold - 50 knots to maximum cruise

- Altitude: All modes - 0 to 6000 feet

SYSTEM DESCRIPTION

The system consists of four modes of operation: SAS, attitude hold, heading hold, and altitude hold. Block diagrams of the system are shown in Figures 1 and 2. There are various interlocks between each of these modes. The SAS mode becomes operable when the system is engaged. This is done by energizing the three series servoactuators with aircraft hydraulic power. The other individual modes, or combinations of modes, can then be selected. These modes operate through the same series servoactuators as the SAS.

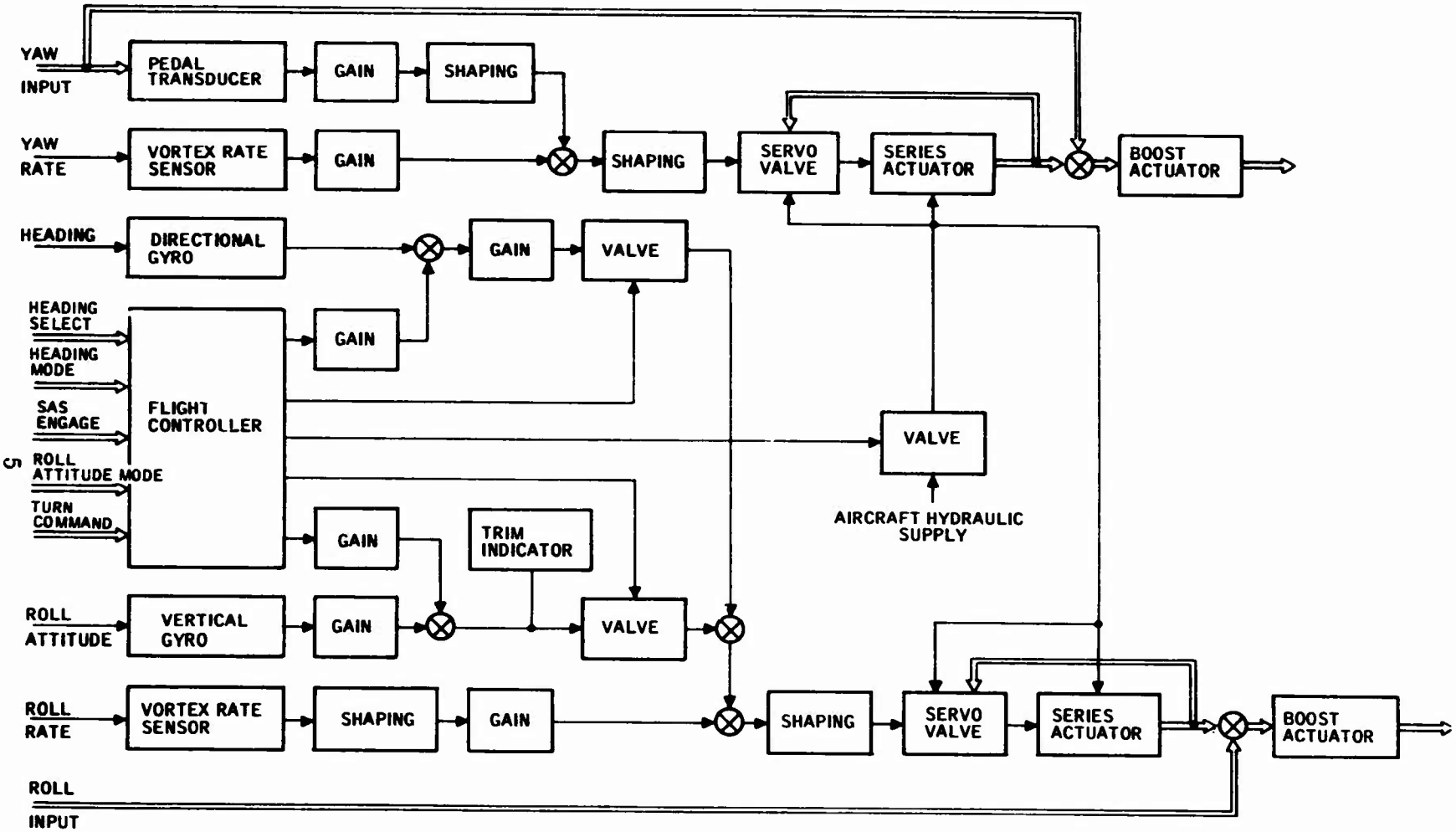

Figure 1. Lateral-Directional Axes Block Diagram.

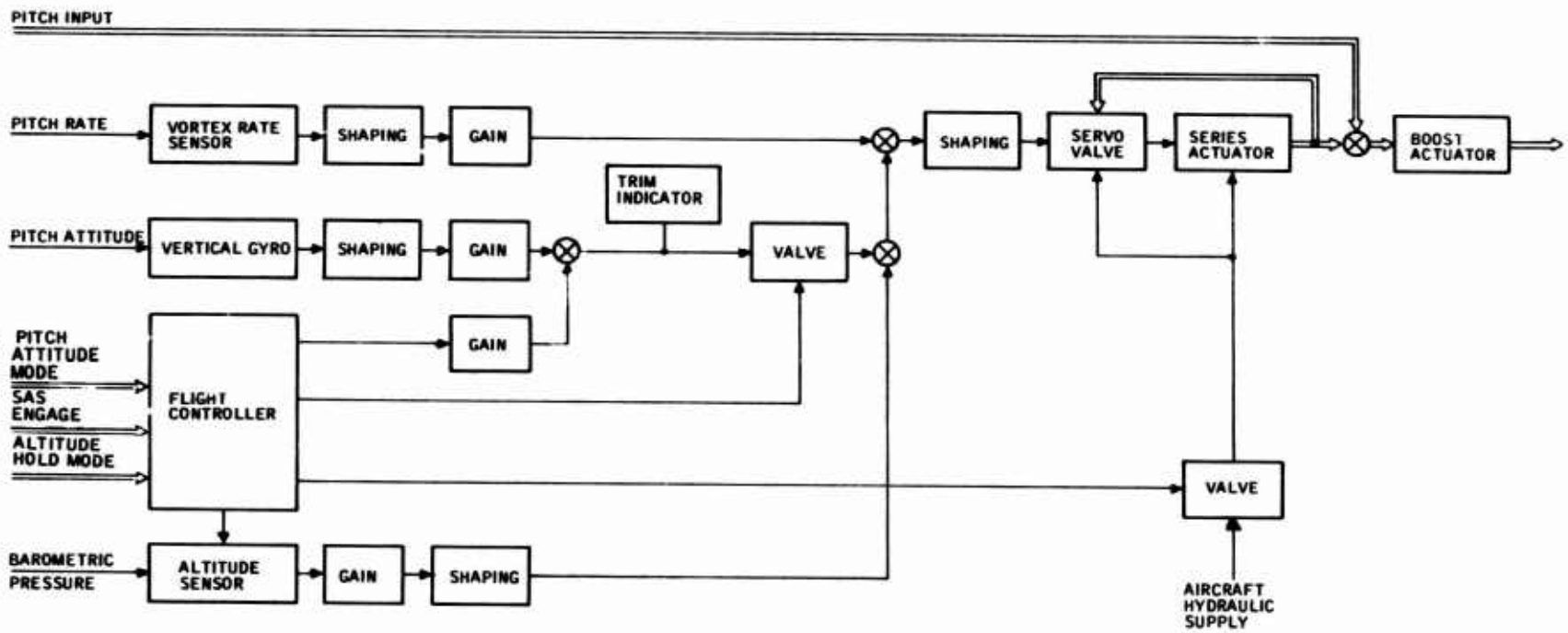

Figure 2. Longitudinal-Vertical Axes Block Diagram.

Normal operation is to energize the system, which engages the SAS. Next, if desired by the pilot, the attitude hold modes (pitch and roll) can be engaged, thus controlling the aircraft to local vertical. Altitude and heading hold can be selected separately or together. This allows the pilot to (1) fly at a fixed altitude while maneuvering the aircraft, such as in holding over a fixed ground location; (2) fly in a fixed direction while varying altitude, such as in making approaches; or (3) use both heading and altitude together to provide pilot relief for long flights from point to point. The following is a description of the individual modes of the system.

Stability Augmentation System

The SAS consists of a vortex rate sensor in each axis, the necessary gain and shaping networks, an engage switch in the flight controller, and a solenoid valve and a series servoactuator in each axis. The servo actuators are mounted directly into the aircraft flight control linkage. In the yaw axis, to give the pilot complete authority at all times, a flight control pedal transducer signal with the proper gain and shaping is summed with the rate sensor signal. This in essence cancels out the rate feedback resulting from aircraft motion due to the pilot's input command. Damping of external inputs is still available at all times. The SAS mode is energized by a switch on the console-mounted flight controller which opens the solenoid valve supplying power to the series servoactuators.

Attitude Hold Modes

The attitude hold modes consist of a vertical gyro, gain and shaping networks, trim indicators, roll and pitch trim controls, a turn command control, engage valves,and an engage switch. The output of the roll attitude channel is summed with the roll SAS channel through a shaping network into the roll series servoactuator. The output of the pitch channel is summed with the pitch SAS channel in a similar manner. In operation, the pilot comes to the desired attitude, trims the aircraft through the cyclic stick,and engages the stick force trim. He then checks and nulls, if necessary, the pitch and/or roll attitude control loops by monitoring the trim indicators while operating the pitch and/or roll trim controls. He then engages the attitude hold modes with the mode select switches. If a turn is desired, it can either be commanded with the stick or through the turn control knob on the function selector,which commands roll attitudes up to approximately 15 degrees. If a trim attitude change is required, due to a change in flight conditions, the pilot disengages the attitude hold modes, retrims the aircraft, checks the attitude control loop nulls, and reengages the modes.

Heading Hold Mode

The heading hold mode consists of a heading gyro, gain networks, a heading select control, an engage valve,and a mode select switch. The heading channel is summed with the attitude channel and the SAS channel of the roll axis. This limits the heading hold mode to airspeeds of approximately 50 KIAS and above, due to the inability to hold heading through the roll axis at low airspeeds.

To use the heading hold mode, the pilot either flies to the desired heading, adjusts the heading select knob to the existing heading,and engages the mode, or simply turns the heading select knob to the desired heading, engages the mode, and allows the control system to fly the aircraft to the selected heading. The mode will then control the aircraft to the selected heading until the mode is disengaged or a new heading is commanded.

Altitude Hold Mode

The altitude hold mode consists of an altitude error sensor, gain and shaping networks and a mode select switch. The altitude error channel is summed with the attitude and SAS channels of the pitch axis. As in the case of heading hold, this mechanization of altitude through the pitch axis only limits the effective use of this mode to airspeeds above approximately 50 KIAS.

To use the altitude hold mode, the pilot flies to the desired altitude, trims the aircraft,and engages the mode. If an altitude change is desired, the pilot disengages the mode, flies to the new altitude, and reengages the mode.

SYSTEM COMPONENTS

The major system subassemblies are listed below. A more detailed description of the system mechanization is presented in Section IV.

Control Panel

The console-mounted control panel provides the controls required to engage and operate the system modes. Basic mode control circuits are mechanized electrically to simplify the interlock and control functions. The panel contains the following pilot-operated switches:

- Power switch which controls 28-vdc power to the engage circuits
- Pitch SAS engage switch

- Roll SAS engage switch
- Yaw SAS engage switch
- Master engage switch
- Pitch attitude engage switch
- Altitude hold engage switch
- Roll attitude engage switch
- Heading hold engage switch

Three indicator lights on the control panel indicate which axes are engaged. Additional functions on the panel are the turn control, the roll trim control, the pitch trim control, and the roll and pitch trim indicators.

Attitude References

Attitude reference signals for the roll and pitch attitude hold modes and the heading hold mode are obtained from the instrument or display gyros already on the helicopter. The electrical interface unit is used to couple the instrument gyro signals with the fluidic computer assembly. On the UH-1C helicopter, these attitude references are the Type MD-1 roll and pitch gyro (vertical gyro) and the J-2 type gyro magnetic compass.

Electrical Interface Unit

In the electrical interface unit, inputs from the roll and pitch attitude references, from the heading select, and from the turn command are converted from electrical to hydrofluidic signals. The basic functions included are demodulation, signal summing, and the electric-to-fluidic transducers.

Fluidic Computer Assembly

The fluidic computer assembly contains the three channels of control mechanized with hydrofluidic amplifiers, filters, and summing circuits. The fluidic rate sensors and the rudder pedal displacement sensor for stabilization are also mechanized in this same assembly. The power for operating these functions is 1500-psi hydraulic oil supplied from the aircraft hydraulic system.

Altitude Error Sensor

The altitude sensor is a double bellows-type sensor which converts differential air pressure into hydrofluidic pressures proportional to altitude deviations. One bellows can be closed at the reference altitude when altitude hold is engaged. The variation in altitude with respect to the reference produces control signals for holding the engaged altitude.

Series Servoactuators

The three series servoactuators, which are part of the system, control the pitch, roll, and yaw axes of the helicopter through the cyclic pitch and tail rotor controls of the aircraft. Servoactuator authority is limited as indicated below:

- Pitch - 18.2 percent of full authority
- Roll - 25 percent of full authority
- Yaw - 19.3 percent of full authority

SECTION III
SYSTEM DESIGN AND ANALYSIS

The first step in the system analysis was to define the design base for subsequent studies. This design base consisted of: (1) UH-1C helicopter math model (Appendix II), (2) system performance goals and operational flight envelope (Appendix III), and (3) general fluidic component transfer functions. Using this design base, a number of alternative mechanizations of varying complexity and performance were investigated. Based on mechanization complexity and hydrofluidic capability, a comparison investigation was made of the alternative systems; a baseline system concept was selected, defined, and analyzed. The system analysis included static accuracy, dynamic accuracy, and dynamic tolerance analysis.

Nominal system performance was evaluated in light of the design goals; and the time histories and data show that the requirements of the design were, in general, satisfied. A gain margin stability check was made, and the computer simulation results showed that at least 6 db of gain margin existed for all system gains and time constants. In some cases, parameters such as high-pass time constants, pedal position feedback gain, etc., are considered least-critical from the stability standpoint; however, large tolerance variations from their nominal values will have a direct effect on system performance characteristics. All system gains should be mechanized to within 10 percent of their nominal value and time constants to within 20 percent of their nominal value.

The analysis results presented in the following sections show that a fixed-gain, control panel-switched series servoactuator system will adquately demonstrate the feasibility of using an advanced hydrofluidic stabilization system to provide pilot relief modes for the UH-1C helicopter.

FSAS DESCRIPTION

The three-axis fluidic stability augmentation system (FSAS) was developed by Honeywell to augment the stability of the UH-1C helicopter in a manner presently accomplished by the mechanical stabilizer bar. For a detailed description of the FSAS, refer to the analysis and flight test results of References 2 and 3.

The control laws for the pitch, roll and yaw axes of the FSAS are presented in Table I. Each axis consists of a hydraulic rate sensor with the fluid output amplified, shaped, and fed directly to the series servo-

TABLE I. FSAS CONTROL LAWS

PITCH SAS

$$B_{1S} = \left(\frac{10,000}{S^2 + 140S + 10,000}\right)\left[0.0378\,X_{cs} - 0.173\left(\frac{1200}{S^2 + 22.1S + 1200}\right)\left(\frac{1}{0.03S+1}\right)\left(\frac{0.04S+1}{0.1S+1}\right)\left(\frac{2.5S}{2.5S+1}\right)\left(e^{-0.02S}\right)\dot{\theta}\right]$$

ROLL SAS

$$A_{1S} = \left(\frac{10,000}{S^2 + 140S + 10,000}\right)\left[0.0282\,Y_{cs} - 0.083\left(\frac{1200}{S^2 + 22.1S + 1200}\right)\left(\frac{1}{0.03S+1}\right)\left(\frac{1}{0.16S+1}\right)\left(\frac{10S}{10S+1}\right)\left(e^{-0.02S}\right)\dot{\phi}\right]$$

YAW SAS

$$\theta_{TR} = \left(\frac{10,000}{S^2 + 140S + 10,000}\right)\left\{0.065X_p - \left(\frac{1200}{S^2 + 22.1S + 1200}\right)\left(\frac{1}{0.03S+1}\right)\left(\frac{2.5S}{2.5S+1}\right)\left[0.15\left(e^{-0.02S}\right)\dot{\psi} - 1.5\left(\frac{1}{S+1}\right)0.065X_p\right]\right\}$$

actuator. The feedback signal paths are high-passed to eliminate damper opposition to pilot input commands and also to minimize the effects of fluidic component drift. A low-pass filter was added to the roll SAS to decrease the high-frequency gain bandwidth. The low damping characteristics of the series servoactuator cause gain bandwidth peaking at 5.5 cps. A high-gain bandwidth at these frequencies will excite the main rotor vibration modes of 0.5 and 1.0 per revolution. The inclusion of the low-pass filter in the roll SAS will have an insignificant effect on pilot input command transient response characteristics; however, the high-frequency damping characteristics of the roll SAS will be less effective from the control theory point of view. In an actual hardware application, a system designed to achieve the same relative damping characteristics for both high- and low-frequency disturbance inputs is guaranteed to excite the high-frequency bending and vibration modes of the aircraft. Complex notch filtering will be required to alleviate this problem. In addition, if one considers that the aircraft will respond to the envelope of a disturbance input rather than the peaks and valleys, the aircraft itself filters the high-frequency components of the disturbance. It can therefore be concluded that system capability to damp the high-frequency components of a disturbance is not needed except in special applications.

PILOT ASSIST MODES

This section contains analytical block diagrams of the various lateral and longitudinal pilot assist modes, discussions of the functions of the elements in the block diagrams, and a summary of the analysis results. Block diagrams of the complete roll and pitch axes mechanizations are shown in Figures 3 and 4, respectively.

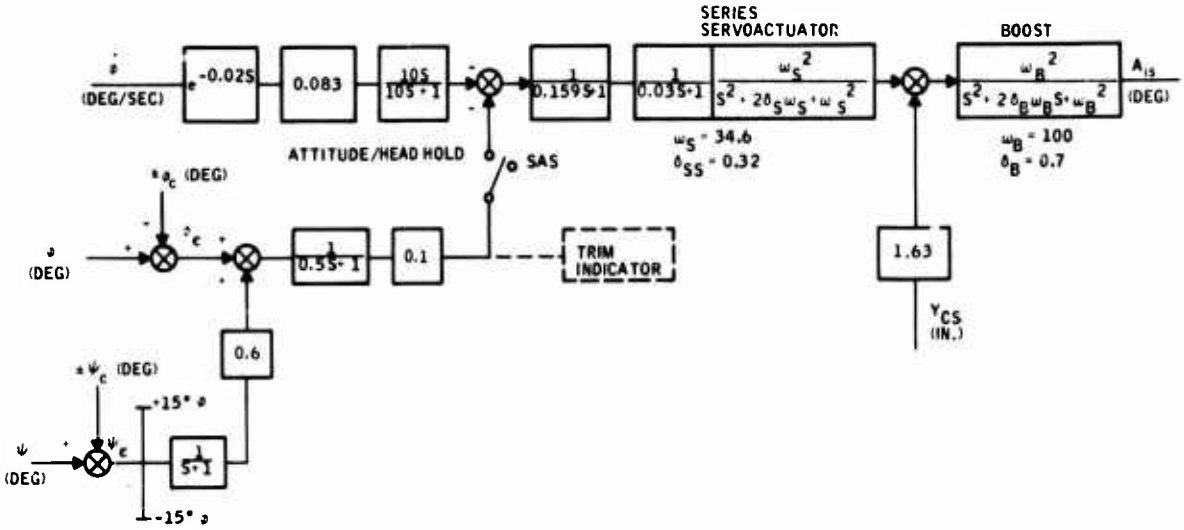

Figure 3. Roll-Axis Pilot Assist Functions.

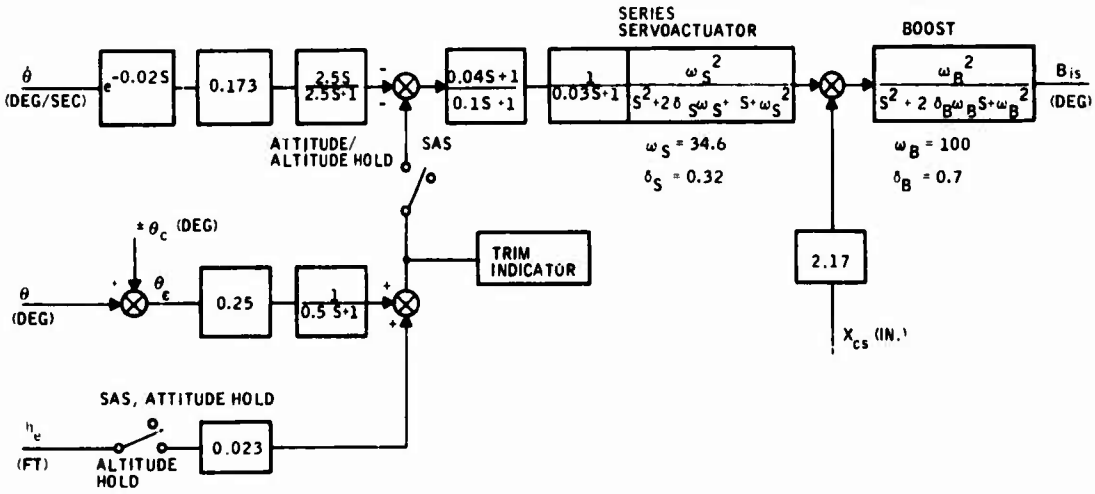

Figure 4. Pitch-Axis Pilot Assist Functions.

Roll Attitude Hold

Mode Description

The roll attitude hold mode utilizes a roll attitude error signal with a fixed gain and lag shaping driving the proportional series servoactuator. Manual trim of the roll axis feedback loop is provided to minimize engage and disengage transients. Once the mode is engaged, the manual turn control may be used as a bank angle select function to command bank angles up to 30 degrees. A block diagram of the roll attitude hold mechanization is shown in Figure 3.

Roll attitude error is generated as the difference between a roll attitude signal referenced to wings-level attitude and the output of the manual trim control:

$$\phi_e = \phi - \phi_c$$

The roll attitude signal may be supplied by the vertical gyro and attitude indicator display already installed in the UH-1C cockpit.

The gain between attitude error and cyclic ram position is fixed. The system was mechanized in this manner to provide a roll attitude hold pilot assist function at the high-speed portion of the UH-1C's flight envelope (approximately 50 knots and above).

Roll attitude hold loop gain was minimized to a value of 0.1 rad A_{is}/rad ϕ_e to minimize servoactuator travel for roll attitude command maneuvers to provide adequate gain stability margin and to provide adequate system damping. Decreasing roll attitude loop gain also had the undesirable effect of increasing the roll attitude response time constant. A comparison of attitude gain (K_ϕ), transient servoactuator displacement, and system response time for a 10-degree roll attitude command at 100 knots airspeed is presented below. System response time (t_{90}) is defined as the time to reach 90 percent of the commanded roll attitude. Placing a lag on the attitude feedback actually causes a lead on the transient response characteristics, which reduces system response time and reduces the required servoactuator travel by 50 percent.

K_ϕ (rad A_{is}/rad ϕ_e)	T_ϕ (sec)	A_{is} SERVOACTUATOR (deg)	t_{90} (sec)
0.2	0	2.2	1.4
0.1	0	1.1	2.8
0.1	0.5	0.5	2.2

Increasing the lag time constant above 0.5 second causes the system to become underdamped and does not allow attitude gain to be increased significantly because of the loss of gain stability margin. It is desirable to increase attitude gain as high as possible, consistent with good system performance, to reduce steady-state errors. However, increasing gain also requires higher servo-actuator travels.

Mode Performance

Roll attitude hold performance was evaluated for several inputs, including roll attitude step commands of 10 degrees and lateral wind velocity step changes of 10 ft/sec.

Time responses showing vehicle motions for roll attitude step commands of 10 degrees are presented in Figure 5. Performance requirements related to these responses are as follows:

- Response to an attitude command shall be smooth and rapid with less than 20 percent overshoot.
- Response time (t_{90}) will be less than 2 seconds.
- Solution time (settling time) will be less than 5 seconds. Solution time (t_s) is defined as the time required to reduce the error to less than 10 percent and maintain it at less than 10 percent.

The performance parameters t_{90}, t_s, and overshoot from Figure 5 are supplied in Table II for 10-degree commands.

TABLE II. ROLL ATTITUDE HOLD PERFORMANCE FOR 10-DEGREE STEP COMMAND

Airspeed (kn)	Response Time t_{90} (sec)	Percent Overshoot	Peak Sideslip β_p (deg)	Steady-State Sideslip β_{ss} (deg)
60	2.8	3.0	2.30	1.10
80	2.4	6.0	1.30	0.64
100	2.2	12.0	0.74	0.36

NOTE: A_{is} roll cyclic ram displacement is approximately 0.5 degree at these flight conditions.

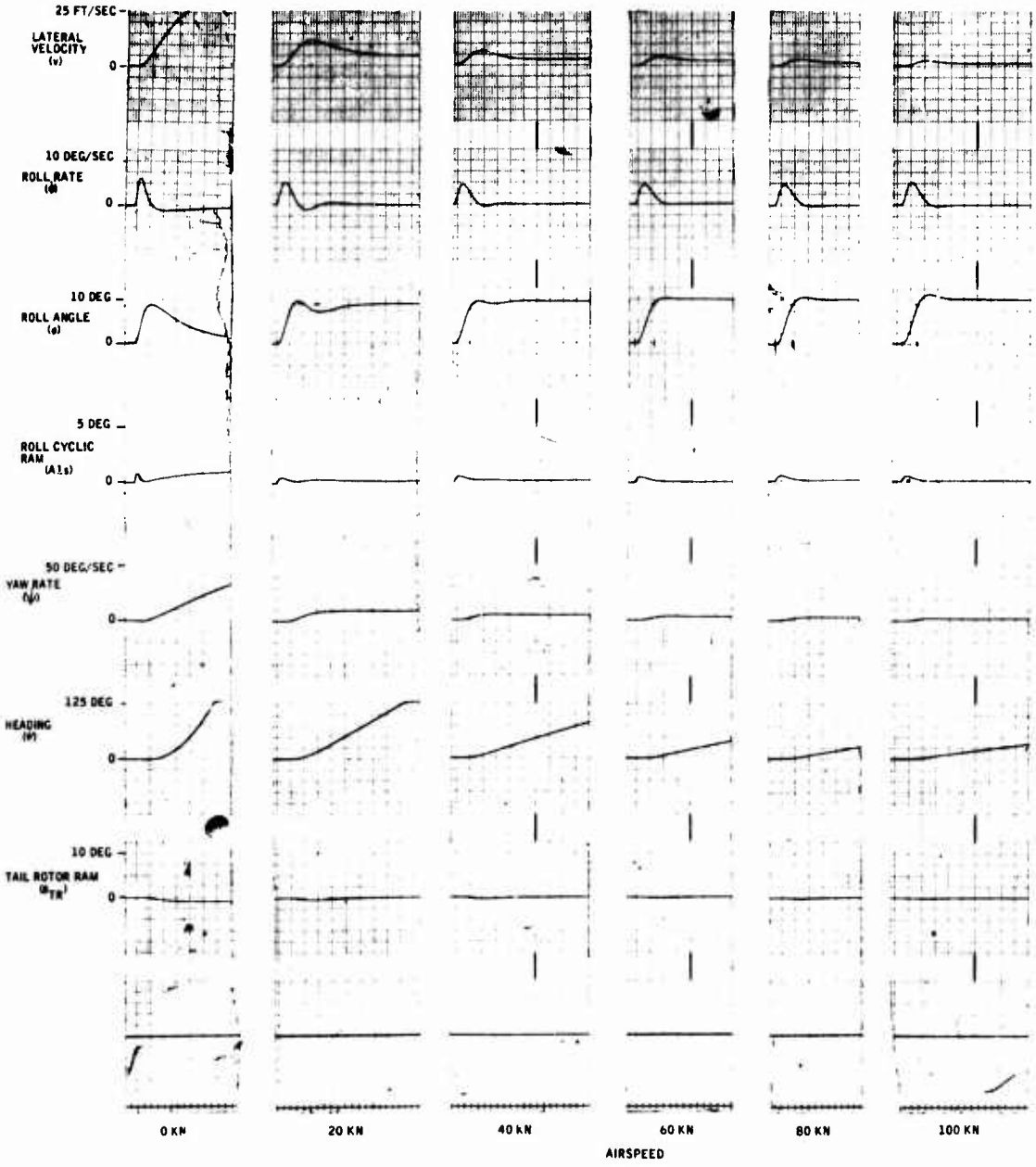

Figure 5. Roll Attitude Hold for 10-Degree Roll Attitude Step Command.

The tabulated data show that the response times range from 2.2 to 2.8 seconds and exceed the design goal. During the analysis, emphasis shifted from a rapid response time to a smooth response time with minimum servoactuator travel, thus keeping the servoactuator authority limits as small as possible. In addition, the roll attitude commands will be initiated from a control panel rather than from the cyclic control stick, and a slightly longer response time may be more comfortable to the pilots.

Overshoot performance ranges from 3 to 12 percent and is within the design goal.

Solution time is equivalent to response time, except for cases which have been minimized to less than 0.2 degree. The ultimate static error is dependent also on nulls within the system. These errors must be determined from detailed consideration of system hardware.

At this point in system development,no small-amplitude nonlinearities of sufficient magnitude to cause a residual oscillation problem are known to exist.

Engage/Disengage Transients

A definitive requirement covering roll attitude hold engage and disengage transients was not included in the design goals. The following guideline was adopted as a basis for evaluating system performance:

- The rate of servoactuator ram displacement or centering will be such that no undesirable transients will be introduced.

- Engagement/disengagement of roll attitude hold under steady-state conditions will not result in transients in excess of ±0.05 g and ±1 degree in roll attitude.

Time responses showing vehicle motions for three types of engage/disengage tests at the 80-knot airspeed are presented in Figure 6. It is necessary to show results at only the 80-knot airspeed because the vehicle transient response characteristics are similar at the other airspeeds of interest and comparable engage/disengage test results would be obtained.

The three engage/disengage tests investigated are as follows:

Type 1 -- Mistrim roll attitude hold feedback loop such that calibration errors and nulls appear as 1.5 degrees roll angle when referenced to the engage switch. Close switch at input to low-pass filter.

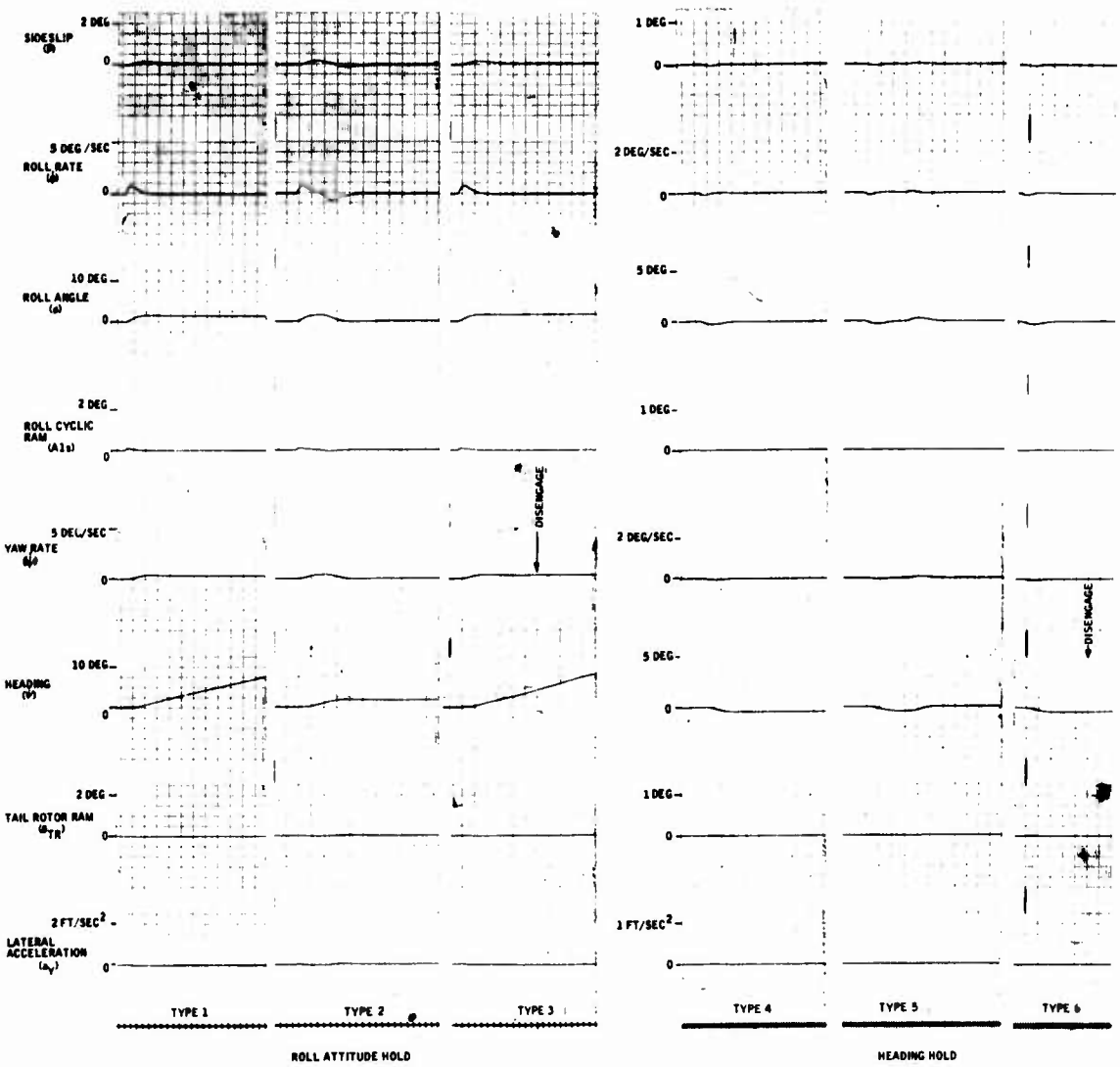

Figure 6. Roll-Axis Engage Transient, 80 Knots.

Type 2 -- Same as Type 1, but adjust roll trim control until constant heading is achieved.

Type 3 -- Same as Type 1; when steady-state roll angle is reached, open switch at input to low-pass filter.

The 1.5-degree roll attitude mistrim is the estimated value for loop calibration and bias errors reflected at the vertical gyro.

A 1.5-degree attitude mistrim reflected at the gyro acts as a 1.5-degree roll attitude command upon engagement. To satisfy the ±1-degree attitude transient design goal,the combination of calibration accuracy and system nulls must be less than 1 degree when reflected at the gyro.

The time response for the Type 1 test of Figure 6 shows that upon engagement,the aircraft banks 1.5 degrees in response to the mistrim command. The servoactuator ram moves to 0.1 degree at a rate of 0.125 deg/sec and then decays to 0 degree at the rate of 0.025 deg/sec. The maximum lateral acceleration was 0.002 g. In light of the small lateral acceleration and ram travel rates,it is felt that system engagement under the conditions of the Type 1 test will provide adequate system performance.

The time response for the Type 2 test shows that once roll attitude hold is engaged,the pilot may retrim attitude through the manual trim control.

Disengage response characteristics are shown in Figure 6, test Type 3. The time response shows that under the steady-state flight conditions, the roll cyclic servoactuator ram returns to center; and upon disengagement, no detectable transients exist.

Pitch Attitude Hold

Mode Description

This mode relieves the pilot workload by automatically maintaining the pitch attitude at the reference attitude which exists at mode engagement.

Pitch attitude hold mode utilizes a pitch attitude error signal with a fixed gain and lag shaping driving the proportional series-servoactuator. Manual trim of the pitch attitude feedback loop is provided to minimize engage and disengage transients. Once the mode is engaged, the manual trim control may be used as a pitch attitude command function to command pitch angle changes up to 10 degrees. A block diagram of the pitch attitude hold mechanization is shown in Figure 4.

Pitch attitude error is generated as the difference between a pitch attitude signal referenced to the vehicle's trim attitude and the output of the manual trim control:

$$\theta_e = \theta - \theta_c$$

To minimize servoactuator engage and disengage transients caused by the helicopter being trimmed to an attitude other than zero degrees pitch attitude or due to biases in the attitude hold loop, an electric trim potentiometer (θ_c) and trim indicator have been included in the pitch axis mechanization. Prior to engaging and disengaging the pitch attitude hold mode, the pilot will adjust the trim potentiometer to null the trim indicator, which will essentially null any commands to the servoactuator. Upon engagement of pitch attitude hold, the helicopter will hold, within the attitude loop's calibration accuracy, the reference attitude.

The pitch attitude hold mode was mechanized with a fixed gain to provide a simple hold function at the high-speed portion of the UH-1C's flight envelope (approximately 50 knots and above). To extend this function to the hover and low-speed portions of the flight envelope,additional aircraft control parameters and switching logic would be required along with gain scheduling.

Pitch attitude gain was minimized to a value of 0.25 rad B_{is}/rad θ_e to minimize servoactuator travel for pitch attitude command maneuvers, to provide adequate gain stability margin, and to provide adequate system damping.

At the cruise and high-speed portions of the flight envelope,small single-main-rotor helicopters have significant roll-to-pitch cross coupling. If the general θ/X_{cs} transfer function is derived,it can be seen that the dominant roots are of the form

$$\frac{\dot{\theta}}{X_{cs}} = - \frac{(S-A)\,(S+B)\,(S+C\pm jD)}{(S+E)\,(S+F\pm jG)\,(S+H\pm jI)}$$

This function shows a second-order pair in the numerator and denominator which did not quite cancel out. These second-order roots are caused by pitch-roll coupling and occur at a frequency higher than the normal pitch roots. As a result, increasing the loop gain tends to drive the higher-frequency poles unstable and the lower-frequency pair of poles moves toward the complex zeros. A gain increase beyond certain limits will deteriorate stability margins at a frequency higher than the pitch axis natural frequency. The real zero in the left half plane, (S+B), has a time constant between 0.5 and 3 seconds. The 0.5-second lag on attitude provides a reasonable cancellation of this root at most speeds.

Mode Performance

Pitch attitude hold performance was evaluated for pitch attitude commands and vertical wind velocity step changes of 10 ft/sec.

Time responses showing vehicle motions for pitch attitude step commands of 2 degrees are presented in Figure 7. Performance requirements related to these responses are as follows:

- Smooth and rapid transient response with no more than one overshoot, which will be limited to 20 percent
- Pitch attitude response time (t_{90}) between 1.0 and 3.0 seconds

The performance parameters t_{90} and percent overshoot from Figure 7 are listed in Table III for 2-degree commands.

TABLE III. PITCH ATTITUDE HOLD PERFORMANCE FOR 2-DEGREE STEP COMMAND, WITH AIRSPEED COMPENSATION

Airspeed (kn)	Response Time t_{90} (sec)	Percent Overshoot
60	2.2	16.0
80	3.0	8.0
100	4.0	0.0

The tabulated data show that the response times range from 2.2 to 4.0 seconds and exceed the design goal at 100 knots. During this analysis, emphasis shifted from a rapid response time to a smooth vehicle response with minimum servoactuator travel, thus keeping the servoactuator authority limits as small as possible. In addition, the pitch attitude commands will be initiated from a control panel rather than from the cyclic stick, and a slightly longer response time may be more comfortable to the pilots.

To obtain uniform system performance over the airspeed range, gain scheduling and increased system complexity would be required. Overshoot performance ranges from 0 to 16 percent and is within the design goal.

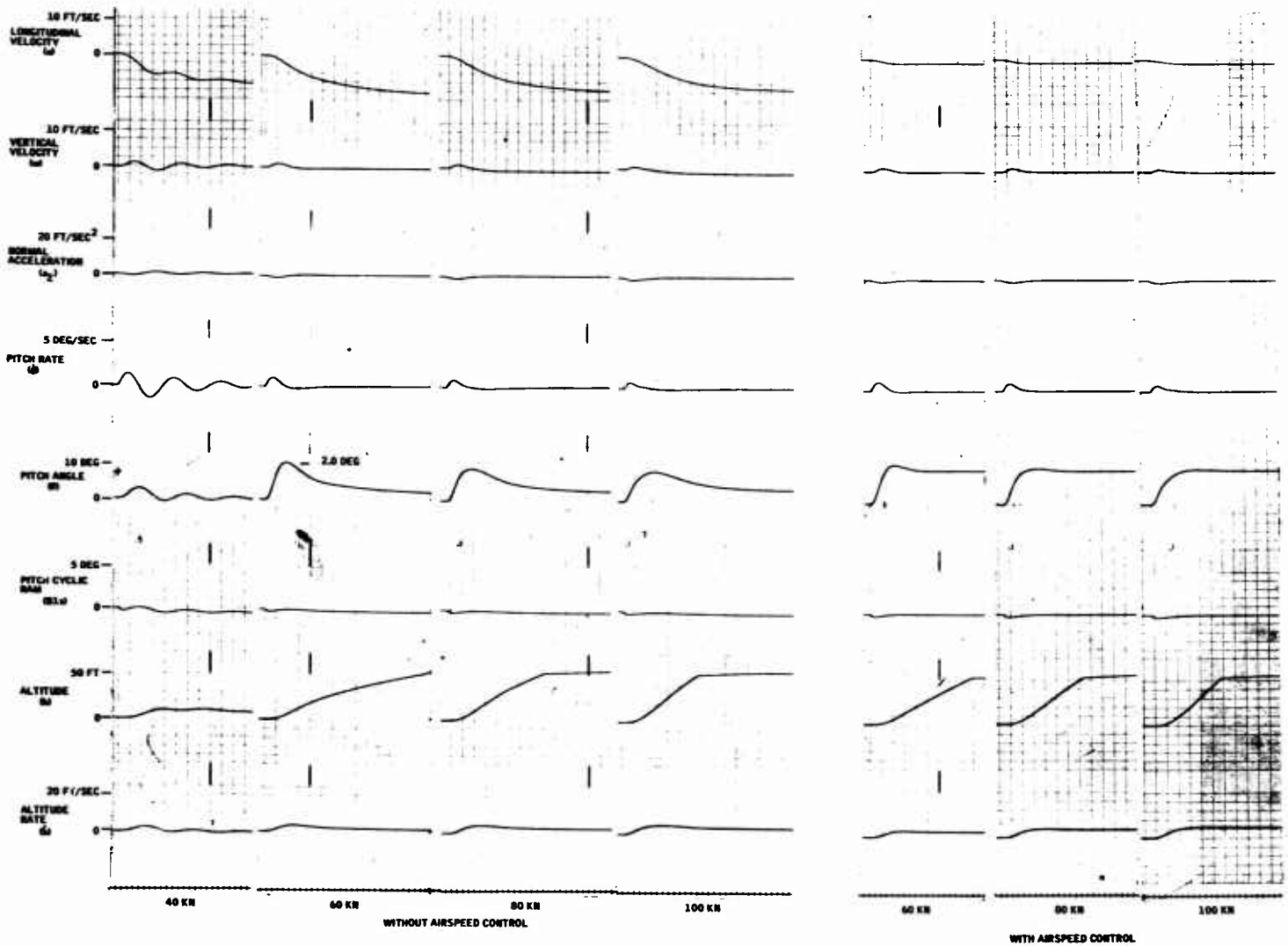

Figure 7. Pitch Attitude Hold, Pitch Command (θ_c) = 2 Degrees.

The time responses of Figure 7 were recorded both with and without airspeed compensation. For the responses shown in the figure, if the pilot commands a change in pitch attitude without changing power, the vehicle will attempt to reach the desired pitch attitude at the expense of airspeed. As airspeed changes, the vehicle will settle in at an attitude other than the commanded value. However, if the pilot changes vehicle power to achieve constant airspeed, the desired pitch attitude will be maintained.

For an autopilot to have attitude hold damping that is uniform in response and meet stringent specifications such as damping equal to 0.7 over the flight envelope, rate feedback in addition to the high-passed rate signal used in the SAS mode is required. This feedback would require mode switching logic to switch out the rate feedback during maneuvering. This additional damping signal is usually obtained by high-passing pitch attitude. The use of body axis pitch rate instead of high-passed pitch attitude for damping results in a slight pitch down from reference attitude during maneuvers. This is caused by the steady-state body axis pitch rate induced in a rolling turn while holding a constant Euler pitch angle. The disadvantage of using high-passed pitch attitude is a degradation in pitch damping during rolling maneuvers. This is because Euler pitch rate is a function of bank angle. These effects can be clearly seen in the Euler pitch rate expression

$$\dot{\theta} = q \cos \phi - r \sin \phi$$

In turn, where r has a steady value, q must also have a steady value for θ to be constant ($\dot{\theta} = 0$). The degraded damping in turns results from the reduced rate gain caused by the $\cos \phi$ term. During attitude hold, the use of body pitch rate, q, would mean a steady-state attitude error during rolling turns. This would also show up as a steady-state altitude error during turns in the altitude hold mode.

This area was investigated during the system analysis; and because pitch damping was within the design goal, the increase in system complexity to achieve a faster response time is felt to be unwarranted. This is based on the program objective to design pilot assist functions for cruise flight condition using the simplest mechanization to achieve the desired results.

Time responses showing vehicle motion for vertical wind velocity step changes are presented in Figure 8. A definitive requirement covering this test input was not included in the system design goals, so the following guideline was adopted for evaluating system performance.

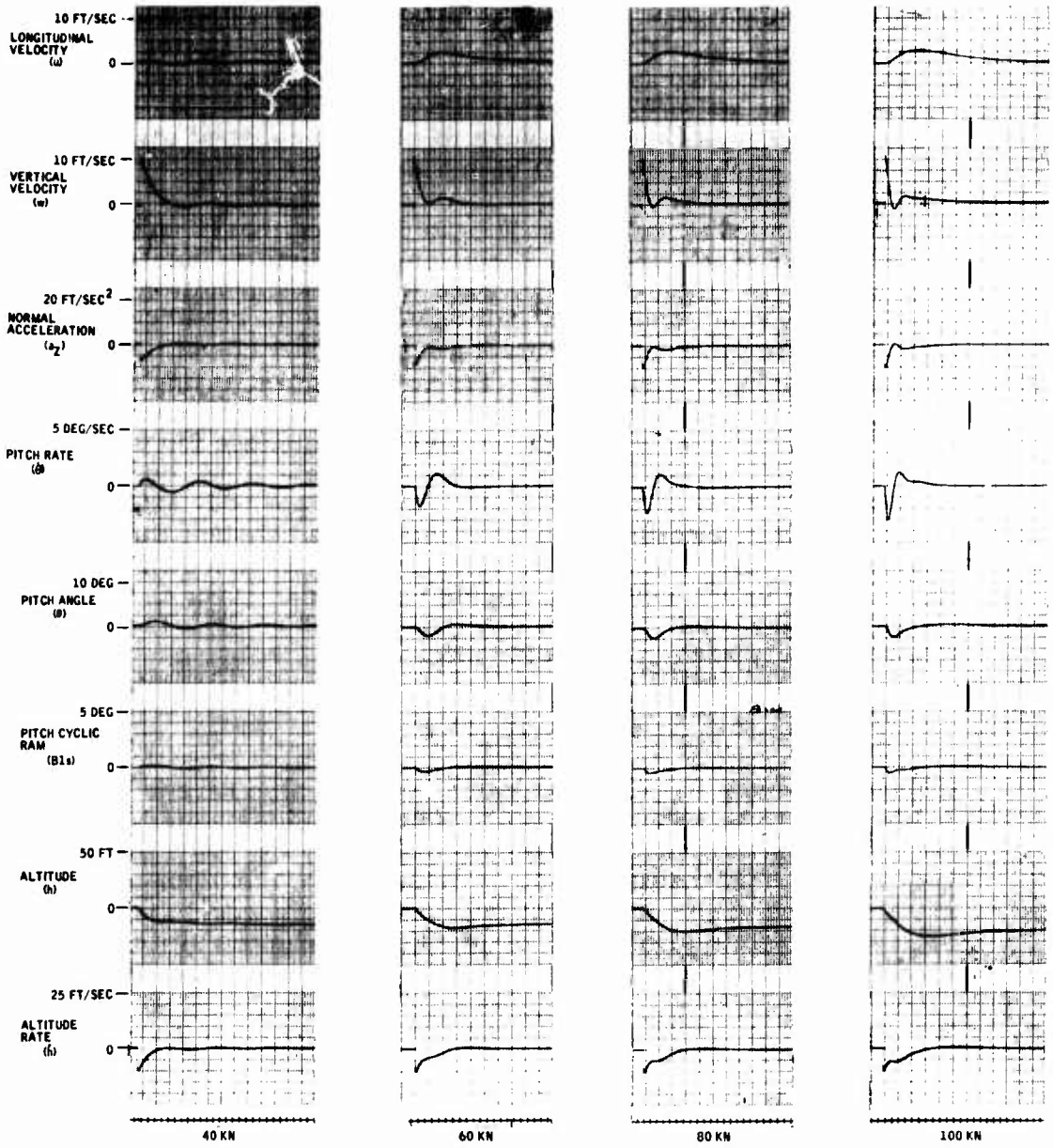

Figure 8. Pitch Attitude Hold, Vertical Gust = 10 Feet/Second.

For a sharp-edged vertical gust of 10 ft/sec, the peak attitude error will be less than 3 degrees and the gust will be damped 90 percent within 6 seconds.

In the 60- to 100-knot airspeed range, the maximum attitude error was 2 degrees and was damped to within 90 percent in less than 6 seconds.

At this point in system development, no small-amplitude nonlinearities of sufficient magnitude to cause a residual oscillation problem are known to exist.

Static inaccuracies in pitch attitude due to analytical considerations have been minimized to 0.075 θ_c. For a 10-degree pitch attitude command, the steady-state pitch attitude will be in error by 0.75 degree. Static inaccuracies in the pitch axis could be eliminated by using error integration in the mechanization. The level of static inaccuracy mentioned above occurred at 80 knots. Accuracy terms at 60 and 100 knots are 0.05 θ_c.

The ultimate static error is also dependent upon nulls within the system. These errors must be determined from detailed consideration of system hardware.

Engage/Disengage Transients

A definitive requirement covering pitch attitude hold engage and disengage transients was not included in the design goals. The following guideline was adopted as a basis for evaluating system performance:

- The rate of servoactuator ram displacement or centering will be such that no undesirable transients will be introduced.

- Engagement/disengagement of pitch attitude hold under steady-state conditions will not result in transients in excess of ±1 degree in pitch attitude or ±0.05 g.

Time responses showing vehicle motions for two types of engage/disengage tests at 60 and 80 knots are presented in Figures 9 and 10. The two engage/disengage tests investigated are as follows:

Type 1 -- Mistrim pitch attitude hold feedback such that calibration errors and nulls appear as 1-degree pitch attitude when referenced to the engage switch. Close switch at input to low-pass filter.

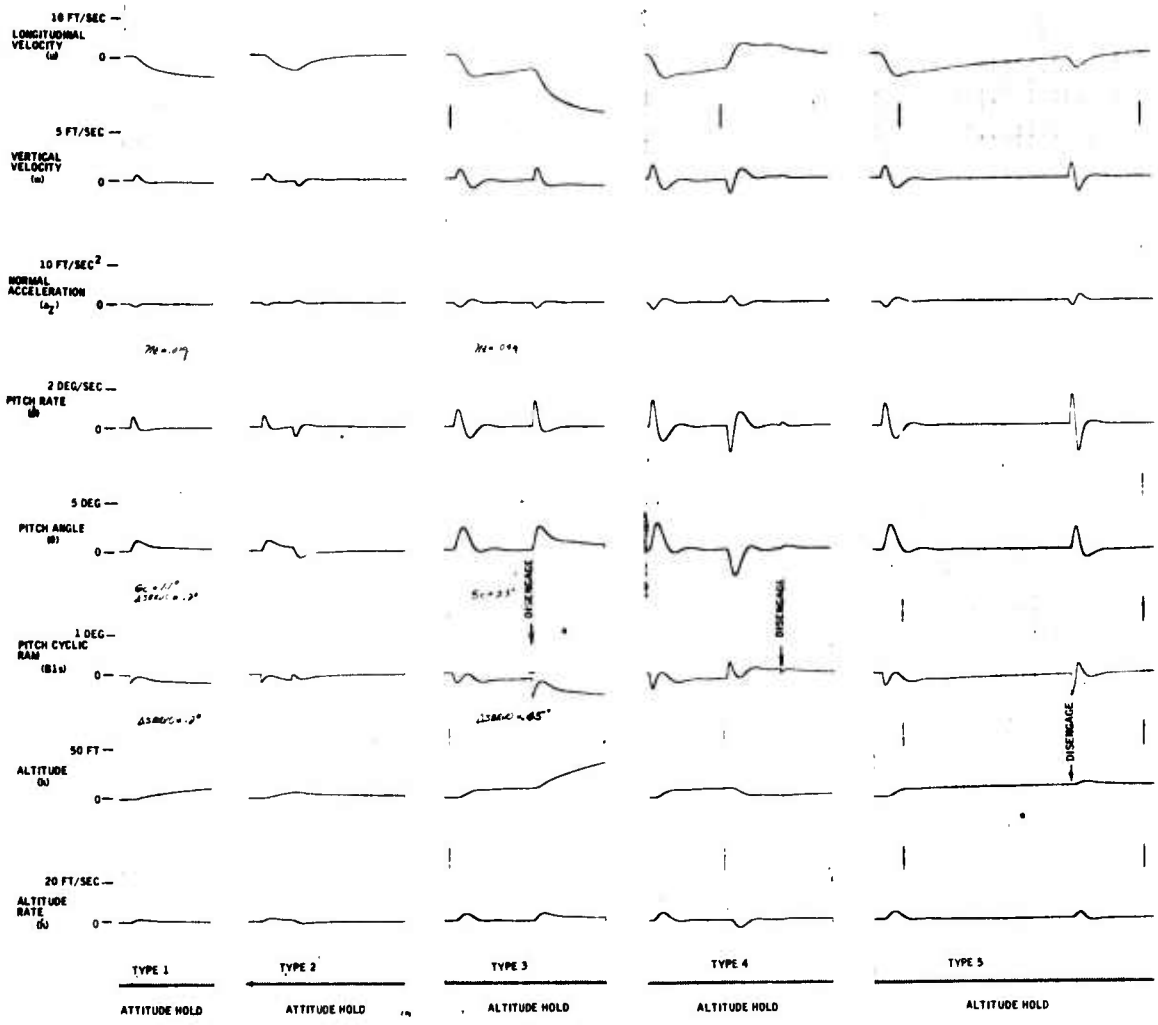

Figure 9. Pitch-Axis Engage Transients, 60 Knots.

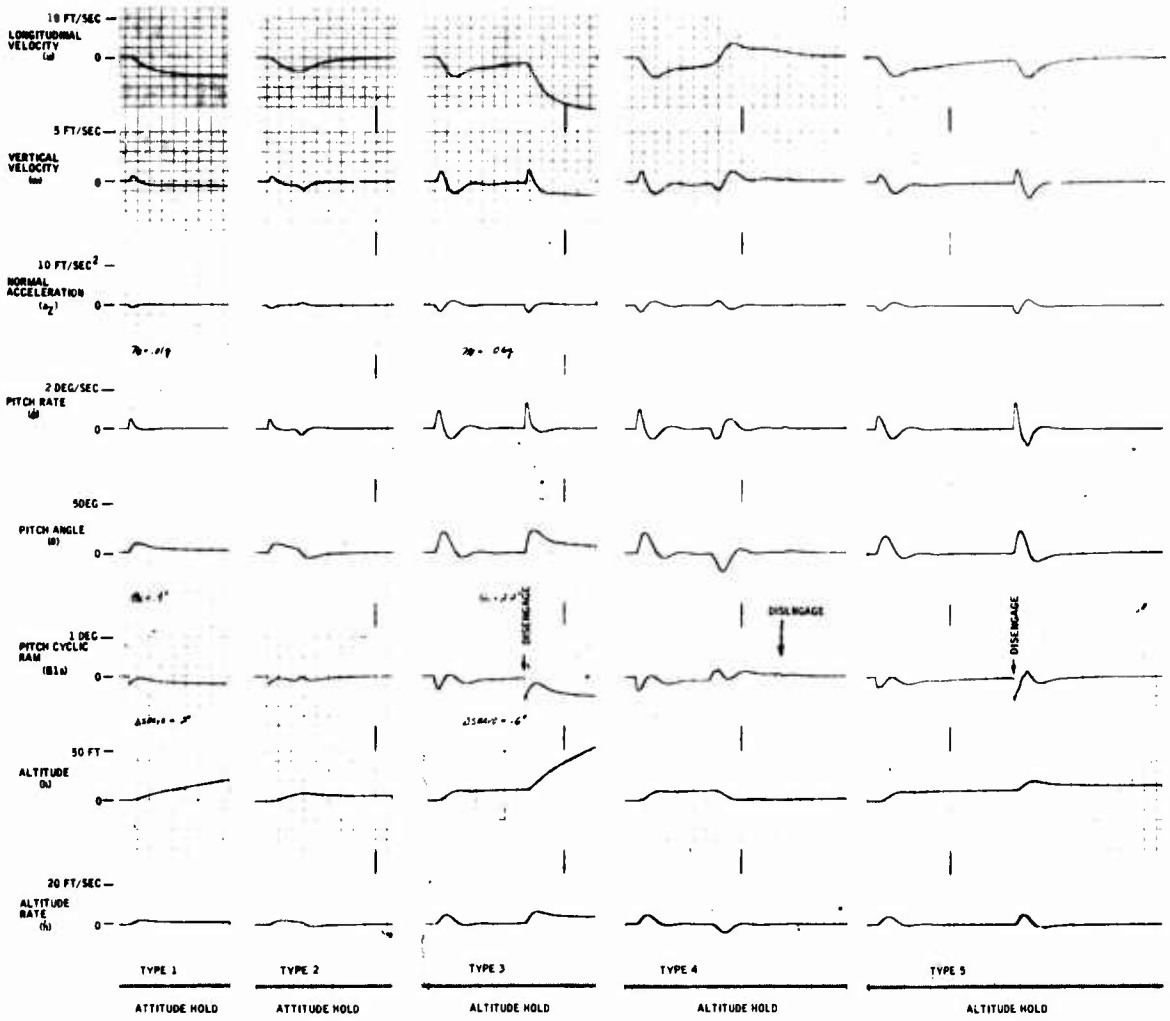

Figure 10. Pitch-Axis Engage Transients, 80 Knots.

Type 2 -- Same as Type 1, but adjust pitch trim control until constant altitude is achieved.

The 1.0-degree pitch attitude mistrim is the estimated value for loop calibration and bias errors reflected at the vertical gyro.

The time responses for the Type 1 test of Figures 9 and 10 show that upon engagement, the aircraft momentarily will pitch 1 degree in response to the mistrim command. The servoactuator moves abruptly 0.2 degree. This servoactuator motion will reflect back through the linkage and cause the pilot to feel a slight kick in the control stick. The maximum acceleration was 0.01 g and took 2.5 seconds to reach maximum. In light of the small acceleration, it is felt that system engagement under the Type 1 test conditions will provide adequate system performance.

The time responses for the Type 2 test show that once pitch attitude hold is engaged, the pilot may retrim pitch attitude to recenter the servoactuator and establish a constant altitude. The Type 2 tests also show that once the pilot has trimmed attitude, the mode may be disengaged with no discernible transients.

Heading Hold

Mode Description

Heading hold at speeds above 50 knots is provided by using heading error to command bank angles through the roll cyclic axis. The bank angle to heading gain is fixed and has a value of 0.6 rad ϕ/rad ψ. Heading error is currently limited to ± 0.437 rad to prevent roll angles in excess of 15 degrees from developing when large preselected heading changes are commanded. The 15-degree bank angle limit was selected as an optimum tradeoff between turn rate capability, turn coordination, and altitude loss in a rolling turn. Turn coordination and altitude loss in rolling turns will be covered in a later section.

The heading hold mode will also include a heading select maneuvering capability which will allow pilot-selectable heading maneuvers of up to ± 180 degrees. A block diagram of the heading hold function is shown in Figure 3. Heading hold is normally activated on selecting the desired heading on the heading selector and engaging a heading command switch.

The basis for heading hold through the roll axis lies in the vehicle's lateral force equation:

$$m\,U_o\,(\dot{\beta}+\dot{\psi}) = m\,a_y + m\,g\,\sin\phi$$

or

$$\dot{\psi} = \frac{g}{U_o}\sin\phi + \frac{a_y}{U_o} - \dot{\beta}$$

where U_o = true airspeed

a_y = lateral acceleration

$\dot{\beta}$ = sideslip rate

If a_y and $\dot{\beta}$ can be held very small or near zero, through coordination of the yaw axis, then yaw rate is proportional to $\sin\phi = \phi$.

$$\dot{\psi} = \frac{g}{U_o}\,\phi$$

Using this relationship, the following simplified heading hold block diagram can be formulated:

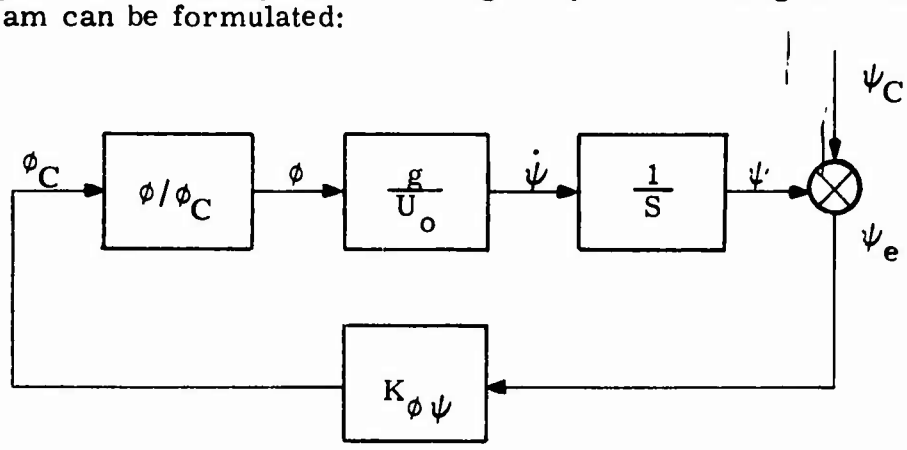

where ϕ/ϕ_c is the roll attitude hold mode response to a command, ϕ_c. To maintain uniform heading hold performance over a range of true airspeeds, it would be desirable to schedule the bank-to-heading gain $K_{\phi/\psi}$ to compensate for the airspeed factor in the $\dot{\psi}/\phi$ transfer function. In the system, acceptable heading hold performance was obtained over the relatively small design base air-

speed range, and it was decided that to keep the mechanization simple, gain scheduling would not be used.

Mode Performance

Stability and speed of response were evaluated using 10-ft/sec lateral wind step inputs and 10-ft/sec lateral wind initial conditions. The design goals referred to a tail rotor overpower as an input. Because of the high-speed aerodynamic effects acting on the aircraft for pedal inputs, the wind-disturbance inputs were felt to be more appropriate.

Heading responses to 10 ft/sec lateral wind disturbances are shown in Figures 11 and 12. Performance goals related to these responses are as follows:

- Response will be smooth and rapid. The vehicle will return to the reference heading with one overshoot, which will not exceed 20 percent of the initial deviation.

- The response time will be between 5 and 20 seconds (measured from the peak error).

A wind step input causes heading error to reach a peak value and then return to zero. Overshoot in this case is measured as a percentage of the peak value.

The performance parameters, t_{90} and overshoot from Figures 11 and 12, are contained in Table IV for 10-ft/sec lateral wind disturbances.

TABLE IV. HEADING HOLD PERFORMANCE RESPONSE TO 10-FEET/SECOND LATERAL WIND STEP INPUTS

Airspeed (kn)	Response Time t_{90} (sec)	Percent Overshoot
60	6.5	18.0
80	8.5	0
100	13.0	0

Response time varied from 6.5 to 13 seconds and the maximum overshoot was 18 percent. This data shows acceptable performance within the design goals in the speed range from 50 to 100 knots.

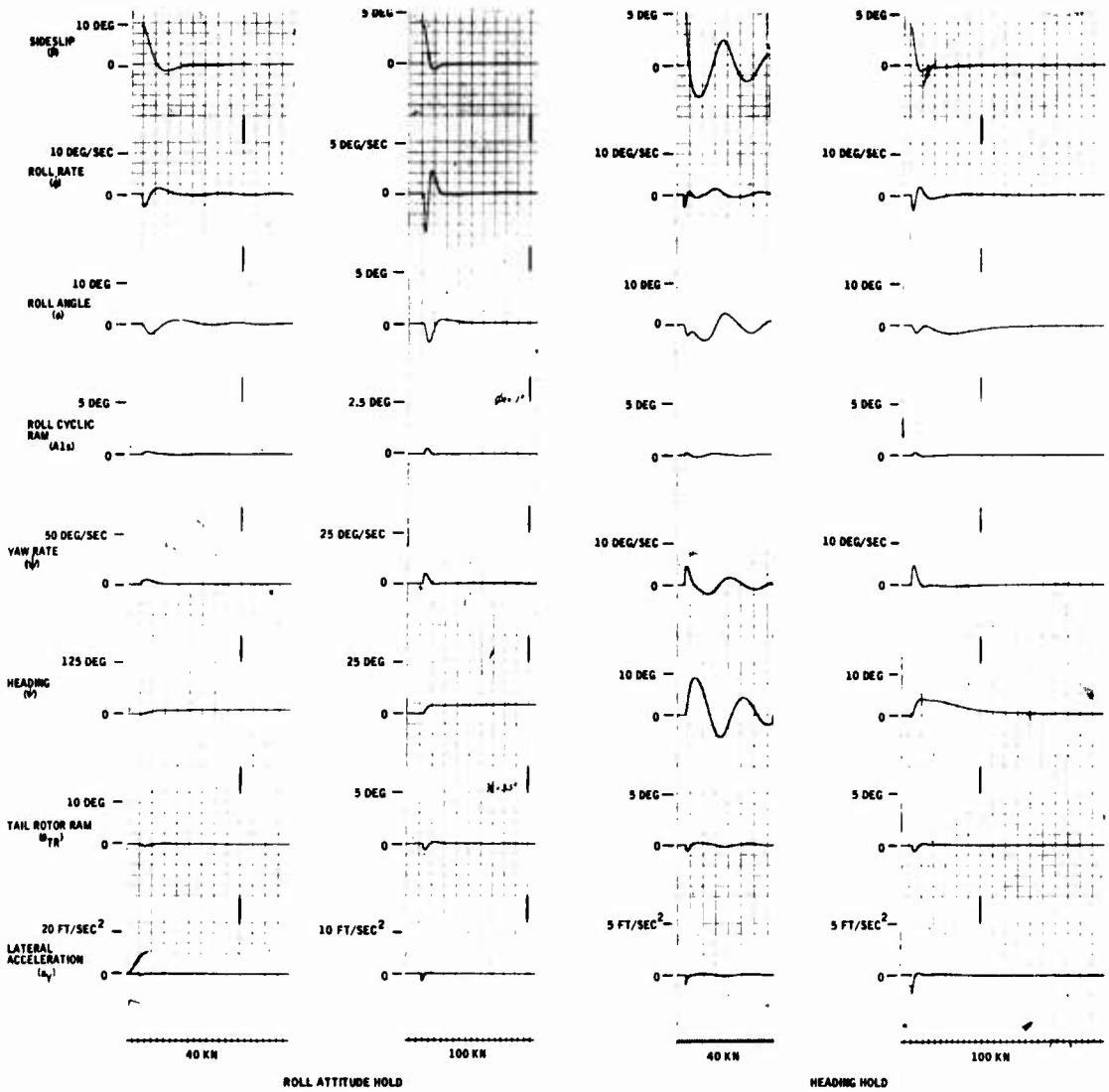

Figure 11. Roll Attitude Hold and Heading Hold, Vertical Gust = 10 Feet/Second.

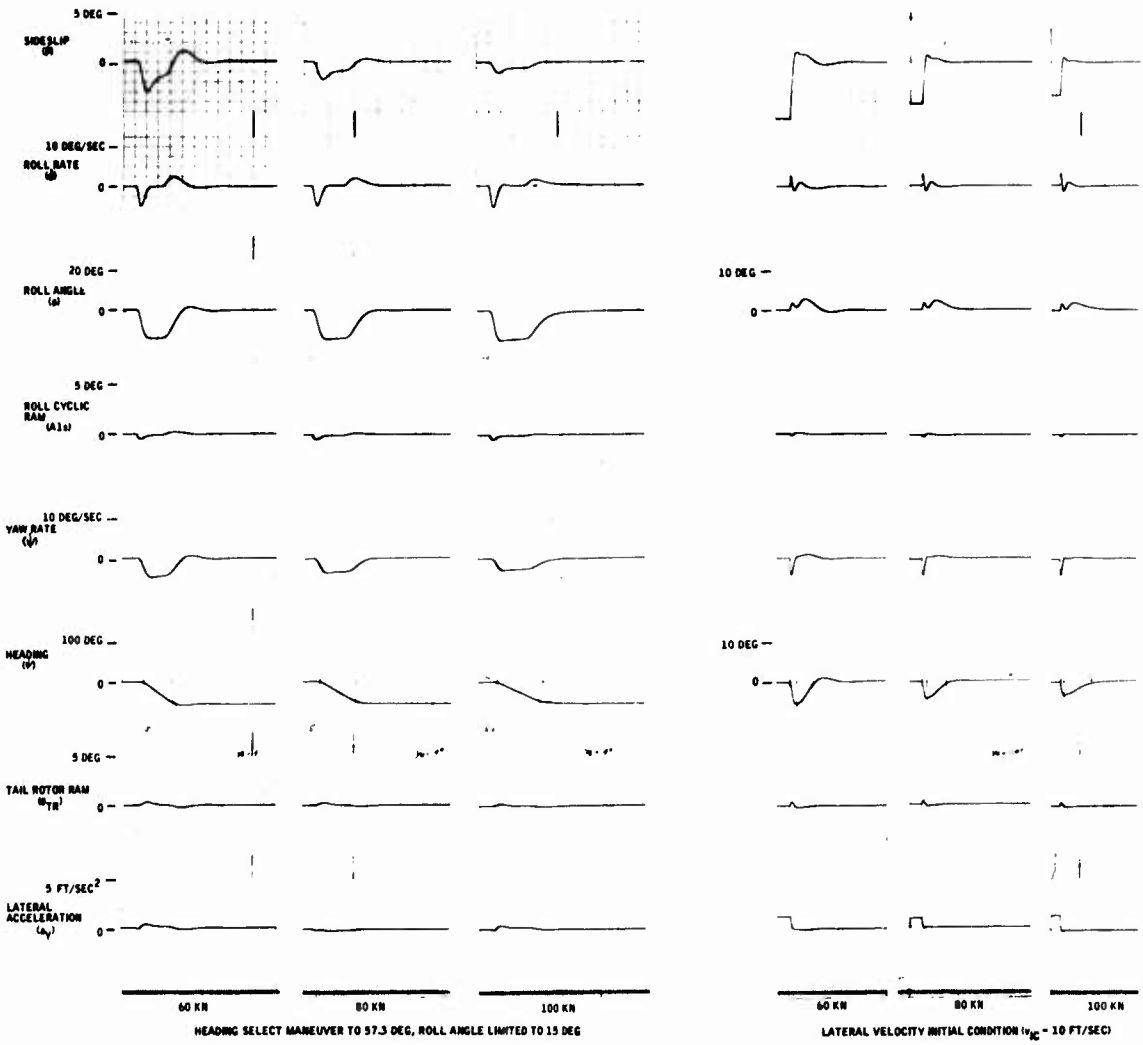

Figure 12. Heading Hold; Heading Select Maneuver and Lateral Velocity/Initial Condition.

Below approximately 50 knots,heading hold performance deteriorates significantly with a 60-percent overshoot in heading. The primary source of the problem of achieving good heading hold performance through the roll axis at low speeds is the lack of static yaw-axis stability and using a fixed-gain system. The gust input used in this test disturbs the yaw axis, which heavily influences the heading transient. By using gain scheduling, heading hold could be effective down to around 35 knots.

In recovering from a lateral wind disturbance of 10 ft/sec, the vehicle will return to the reference heading to within ±0.3 degree. This is due to the poor static characteristics of the helicopter and could be eliminated by adding integral control to the system.

Static inaccuracies in heading hold due to analytical considerations have been minimized to less than 0.3 degree. The ultimate static error is dependent also on nulls within the system. These errors must be determined from detailed consideration of system hardware.

At this point in system development,no small-amplitude nonlinearities of sufficient magnitude to cause a residual oscillation problem are known to exist.

Heading Select

Mode Description

The heading select mode for speeds above 50 knots is designed to allow the pilot to steer a new heading automatically after first dialing in the new heading on the heading selector and then engaging the heading select engage switch. The error between the new selected heading, ψ_c, and the existing vehicle, ψ, is transmitted through the heading loop to command the appropriate bank angle. The heading select error input has the following transfer function:

$$\psi/\psi_c = 1/(1+TS)$$

The time constant is not critical,but the time required to achieve the desired heading is proportional to the magnitude of the time constant, which in turn affects the turn rate capability. During the computer performance evaluation,the time constant was assumed to be zero.

Mode Performance

Heading select performance was evaluated for two inputs: 10- and 57.3-degree heading select commands.

Time responses showing vehicle motions for heading select commands are presented in Figures 12 and 13. Performance goals related to these responses are as follows:

- The roll-in and roll-out shall be accomplished smoothly with no noticeable variations in roll rate.
- The aircraft will not overshoot the selected heading by more than 10 percent.

The best measure of "smoothness" of roll-in and roll-out is the maximum roll rates reached in each case. Roll rates from the 57.3-degree commands of Figure 12 are listed in Table V. The roll-in rates are approximately 5 deg/sec. These rates are felt to be acceptable in view of the fact that roll-in is initiated by the pilot and he therefore fully anticipates the rates. The peak roll-out rates, on the other hand, range from 1.5 to 2.3 deg/sec and build up over a period of about 4 seconds. These rates are low enough and build up and decay over a period of about 8 to 10 seconds, and they can be considered "smooth" even though they will be unanticipated by the pilot.

TABLE V. MAXIMUM ROLL-IN AND ROLL-OUT RATES FOR 57.3-DEGREE HEADING SELECT COMMANDS

Airspeed (kn)	Roll-in Rates (deg/sec)	Roll-out Rates (deg/sec)
60	4.9	2.3
80	5.0	2.0
100	5.5	1.5

The "with no noticeable variation in roll rate" phrase is written in many design specifications. The reason is not obvious, either from a system performance or a pilot comfort point of view. To make them equal would require extensive system complexity which seems unwarranted, and because the pilot may not always anticipate the roll-out rates, an abrupt change may cause pilot discomfort.

An examination of the time response shows that the turns are made with smooth, positive control of roll attitude and without any spurious or oscillatory motions.

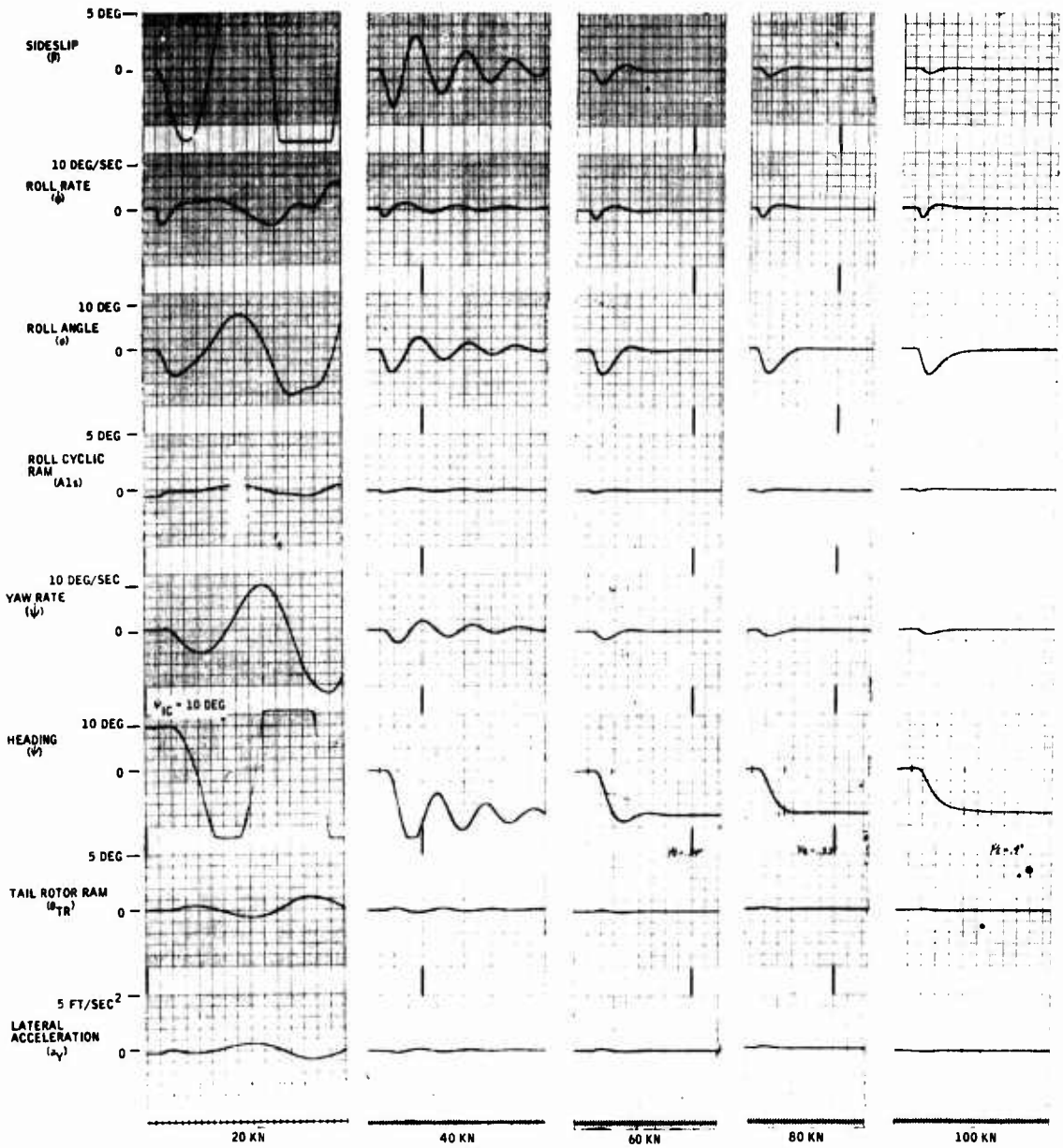

Figure 13. Heading Hold for Heading Select Command to 10 Degrees.

In response to a heading command, the time responses shown in Figure 12 show that the worst-case overshoot occurred at 60 knots and was 5 percent. This level of overshoot is within the limits of the design goals.

Another performance parameter of interest is the turn rate ($\dot{\psi}$) capability of the heading select mode. Turn rate data taken from Figure 12 is plotted in Figure 14. The plot shows that for a bank angle limit of 15 degrees, turn rate ranges from 2.6 deg/sec at 100 knots to 4.6 deg/sec at 60 knots. At 90 knots the turn rate is 3.0 deg/sec, which is a standard rate turn. Turn rate may be calculated for any desired bank angle by using the following expression:

$$\dot{\psi} = \frac{57.3\ g}{U_o} \tan \phi$$

where $\dot{\psi}$ = turn rate in deg/sec

ϕ = bank angle in deg

U_o = true airspeed in ft/sec

g = 32.2 ft/sec^2

Heading responses for a 10-degree heading select command are shown in Figure 13. Performance parameters, system response time, t_{90}, and percent overshoot are plotted in Figure 14. Response time varies from 8 to 18 seconds and percent overshoot varies from 0 to 12 percent for airspeeds above 60 knots. These performance parameters are within the limits of the design goals.

Engage/Disengage Transients

A definitive requirement covering heading hold engage and disengage transients was not included in the design goals. The guideline specified for roll attitude hold will be used for evaluating heading engage and disengage transient performance.

Time responses showing vehicle motions for three types of engage/disengage tests are presented in Figure 6. The three tests investigated are as follows:

Type 1 -- Mistrim heading hold loop such that calibration errors and nulls appear as 0.5-degree heading when referenced to the engage switch. Close switch at directional gyro.

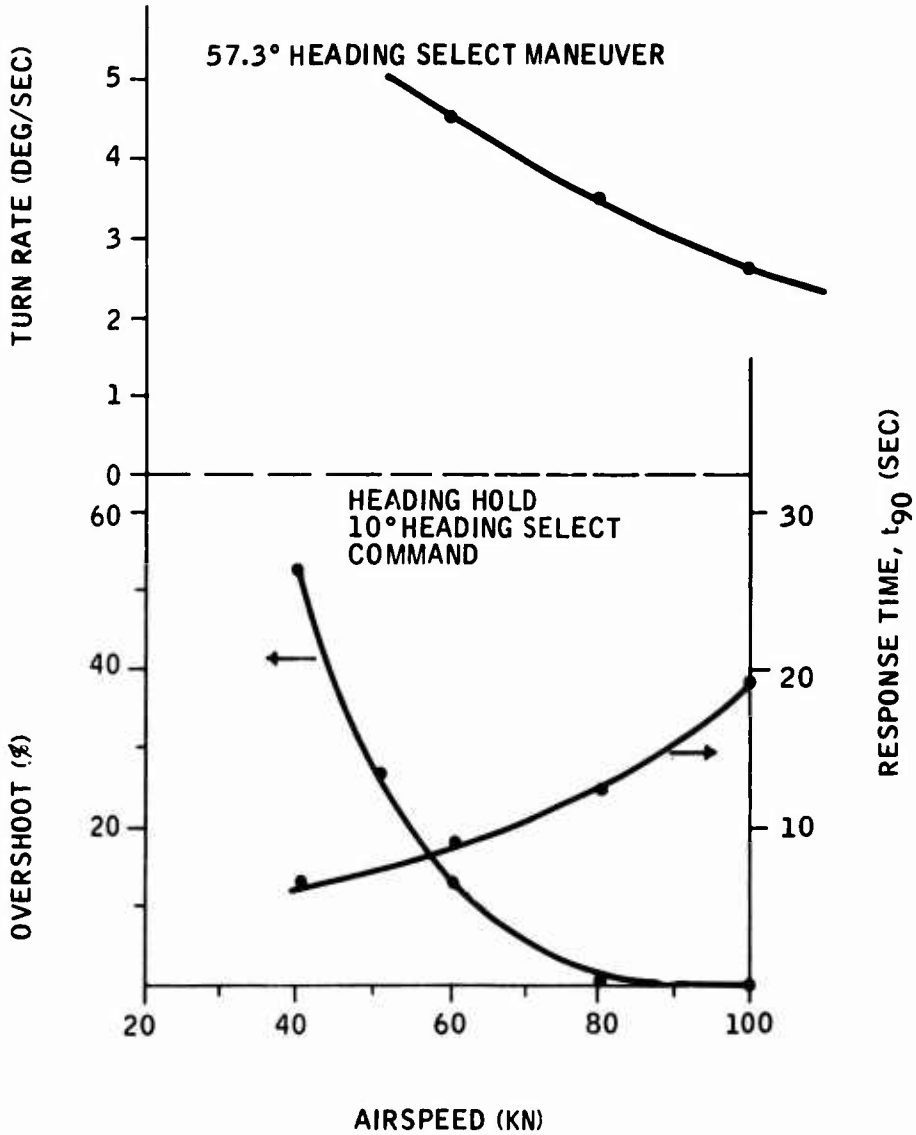

Figure 14. Heading Select Mode Performance.

Type 2 -- Same as Type 1, but adjust heading command to reference heading.

Type 3 -- Same as Type 1; when steady-state heading is reached, open switch at directional gyro.

The 0.5-degree heading mistrim is the estimated value for loop calibration and bias errors reflected at the directional gyro.

A heading mistrim of 0.5 degree reflected at the gyro acts as a heading command on engagement. Test Type 1 of Figure 6 shows vehicle transient motion under these conditions. As shown, the roll cyclic servo ram travels an insignificant amount,and the change in lateral acceleration is almost undetectable. System engagement for this test condition is well within the limits of the design guidelines.

Test Type 2 shows that once heading hold is engaged, the pilot may retrim heading through the heading select control.

Test Type 3 shows that once steady-state conditions are reached, the roll cyclic servo ram returns to center, and disengaging heading hold results in insignificant transient characteristics.

Altitude Hold

Mode Description

This mode provides automatic control of the vehicle to maintain a reference barometric altitude. The mode was designed on the premise that the pilot would fly to the given altitude, trim the system, and engage pitch attitude hold and then altitude hold. A pitch attitude error mistrim will cause the vehicle to fly to an altitude other than the reference. The altitude error due to attitude mistrim is a function of vehicle dynamics and the amount of mistrim. Computer simulation results showed that the altitude error in feet would be approximately 4 times the amount of pitch error mistrim in degrees.

In the linear range of the system, mode engagement at moderate climb and descent rates is possible. These rates are estimated to be in the range of 300 to 400 ft/min.

At speeds above 50 knots, pitch attitude is used to control altitude, and the rotor collective pitch position will be controlled manually by the pilot. The altitude signal from the barometric sensor is compared with the reference to develop an error signal which is transmitted to the pitch-axis cyclic servoactuator. The altitude hold mechanization is shown in Figure 4.

An alternate altitude hold mode was investigated to provide pilot-selectable altitude change maneuvering capability. It incorporated a large time constant high-pass on pitch attitude to provide proportional-plus-integral control of altitude error, altitude rate blended with altitude, and a forward-loop integration with a small gain. The mode was designed in this manner to meet the altitude rate engagement, altitude command, and static accuracy design goals. Upon associating this mode configuration to fluidic hardware, several problems arose. The forward-loop integration would not be an available hardware component.

The high-passed attitude, which is usually provided by a synchronizer, would cause mechanization complication in handling the energy stored in the high-pass during mode switching. It was then decided that the altitude hold mode would be used principally during straight-and-level flight operations, and its function would be to maintain the altitude at the time of mode engagement. To provide this basic function, the mode configuration was simplified to the configuration shown in Figure 4.

Mode Performance

Altitude hold performance was evaluated for two inputs -- altitude command of 50 feet and a vertical wind velocity step change of 10 ft/sec.

Time responses showing vehicle motion for altitude step commands of 50 feet are presented in Figure 15. Performance requirements related to these responses are as follows:

- In response to an altitude step command of 100 feet the first overshoot will not exceed 20 percent.
- Response time (t_{90}) will be 5 to 20 seconds.

Altitude hold performance was not evaluated for compliance with these design goals. The system will not be mechanized with the capability to allow the pilot to command altitude changes with the altitude hold mode engaged. These responses were recorded to investigate system stability and to ensure that adequate gain margin exists for the system gains and time constants as shown in Figure 4.

An apparent altitude command could be imposed on the system by external disturbances. If the helicopter flew through air turbulence and abruptly lost altitude, the altitude error signal would appear as a sharp-edge altitude command. In recovering the lost altitude,

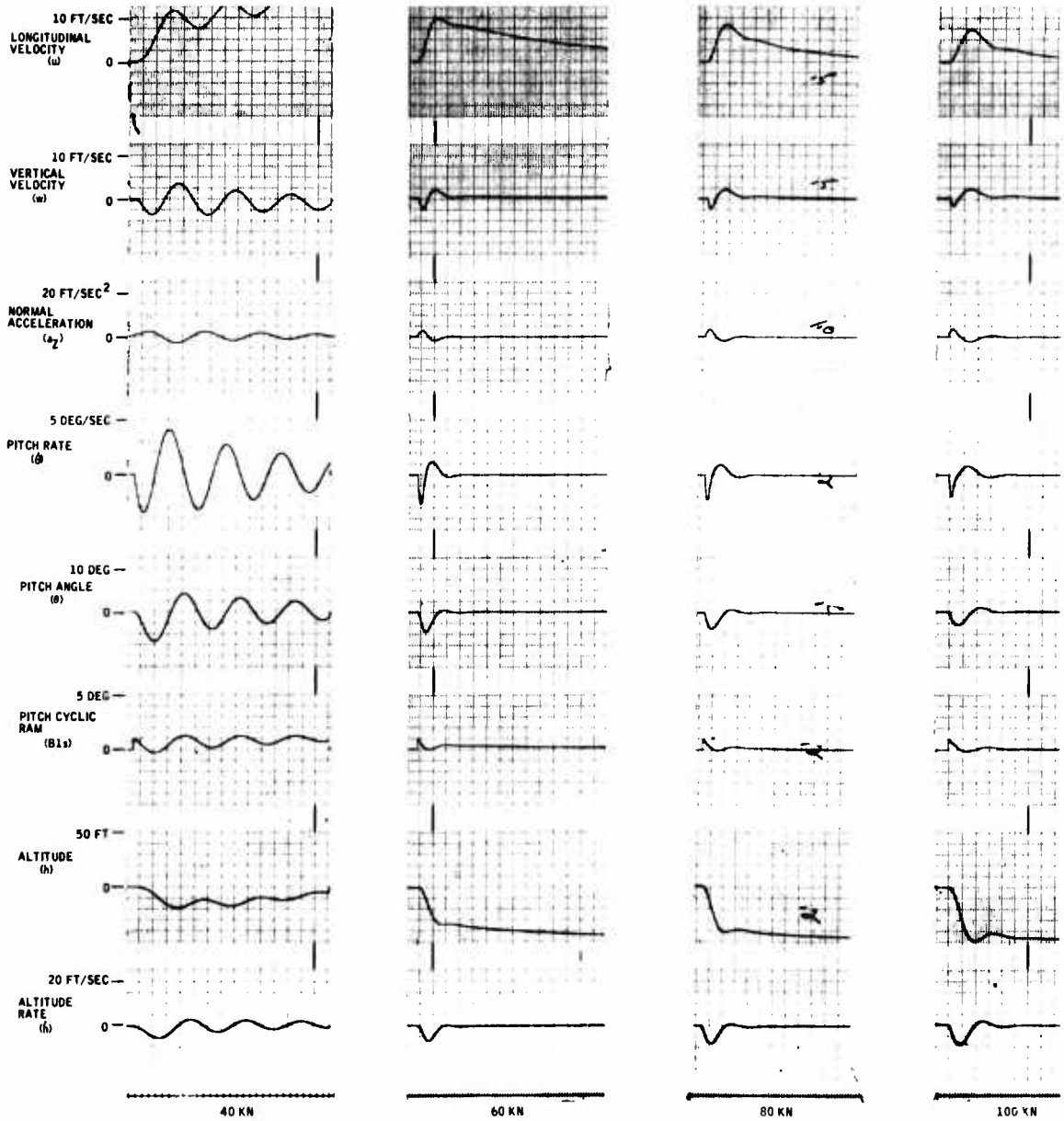

Figure 15. Altitude Hold, Altitude Command = 50 Feet.

the response would be similar to those shown in Figure 15. There would be a fairly rapid initial recovery and a long-term drool to the reference altitude.

Altitude hold response to 10 ft/sec vertical wind disturbances is shown in Figure 16.

A wind step input causes the altitude error to reach a peak value and then return to reference. Overshoot in this case is measured as a percentage of the peak value. System response time will be measured from the peak altitude error.

Performance parameters, t_{90} and overshoot from Figure 15, are supplied in Table VI.

TABLE VI. ALTITUDE HOLD PERFORMANCE RESPONSE TO 10 FEET/SECOND VERTICAL WIND STEP INPUT

Airspeed (kn)	Response Time t_{90} (sec)	Percent Overshoot
60	*	0
80	6.4	0
100	6.0	11

*Long-term drool-altitude error is reduced to within 4 feet of reference within 6 seconds.

Response time is generally less than 6.5 seconds, and the overshoot is less than 11 percent. The time response of Figure 16 and data of Table VI show that the system will minimize altitude disturbances in a fairly smooth manner. The design goals for altitude step commands generally apply to these disturbance inputs, and system performance is within the limits of the design goals with the exception of the 60-knot case. Here the long-term drool caused by vehicle/system overdamping causes the response time goal to be exceeded.

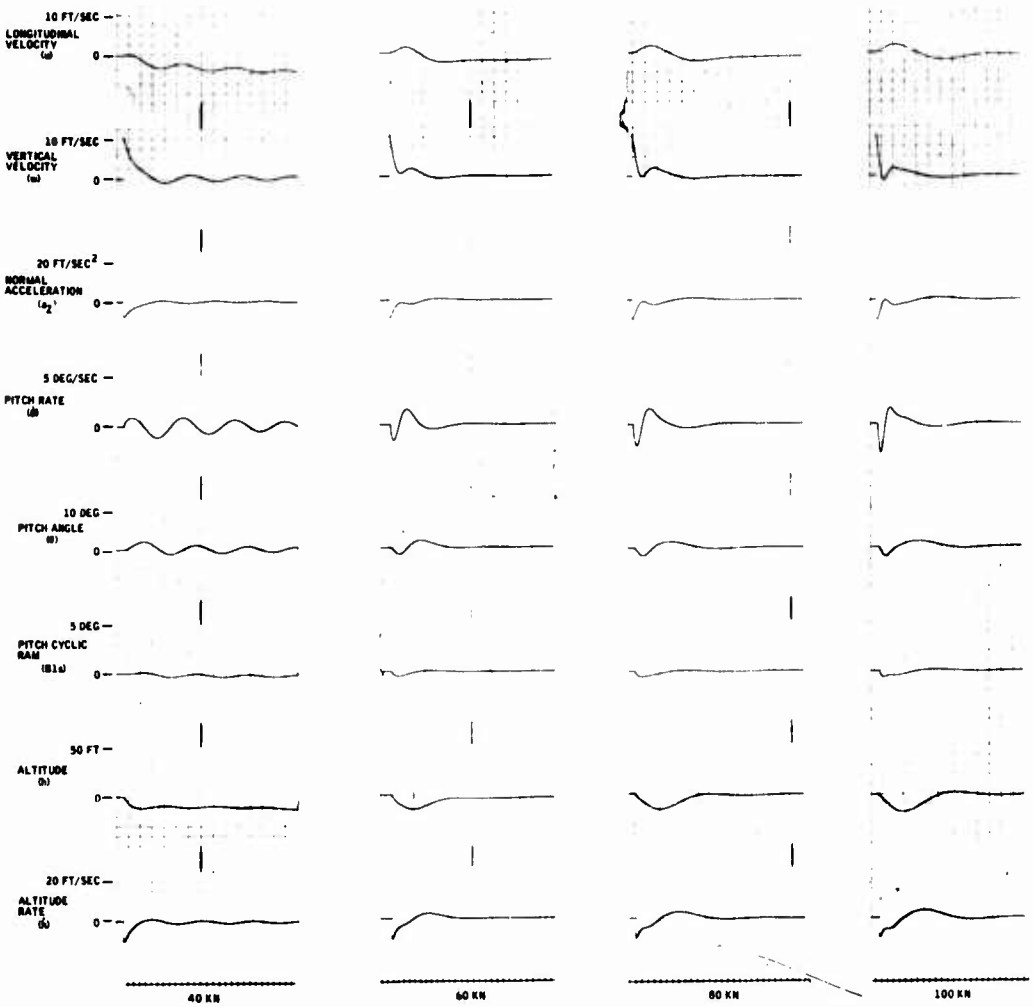

Figure 16. Altitude Hold, Vertical Gust = 10 Feet/Second.

Static inaccuracies in altitude hold due to analytical considerations have been minimized as follows:

Airspeed (kn)	Static Error Relation
60	$h_{ES} = 0.12\ h_{DIST}$
80	$h_{ES} = 0.08\ h_{DIST}$
100	$h_{ES} = 0.04\ h_{DIST}$

where h_{ES} is the magnitude of altitude error one minute after the disturbance has occurred, and h_{DIST} is the magnitude of the external disturbance command.

The ultimate static error is dependent also upon nulls within the system. These errors must be determined from detailed consideration of system hardware.

Altitude Loss in Turns

Altitude loss in turn maneuvers was evaluated for 10-degree bank angle commands and 57.3-degree heading select commands. Time responses showing vehicle motions for these commands are presented in Figures 17 through 19. No definitive design goal was specified for these maneuvers, so the following was adopted for evaluating system performance.

Reference altitude will be maintained to within 0.15 percent or ±20 feet, whichever is larger, for bank angles up to 15 degrees.

Transient and steady-state altitude losses taken from Figures 17 through 19 are listed in Table VII. The figures show that once the desired heading is reached and a maneuver is initiated in the other direction, the altitude error is of opposite sign. This is because the aircraft equations are basically linear; the shape and magnitude of the responses are indicative of aircraft motion, but the responses showing an initial increase in altitude at the start of a new maneuver should actually be interpreted as a loss of altitude.

The tabulated data and time responses show that altitude loss during turn maneuvers is minimal and well within the limits of the guideline. It is felt that because of the demonstrated altitude hold performance during turns, an increase in system complexity to further minimize the transient altitude loss is not needed.

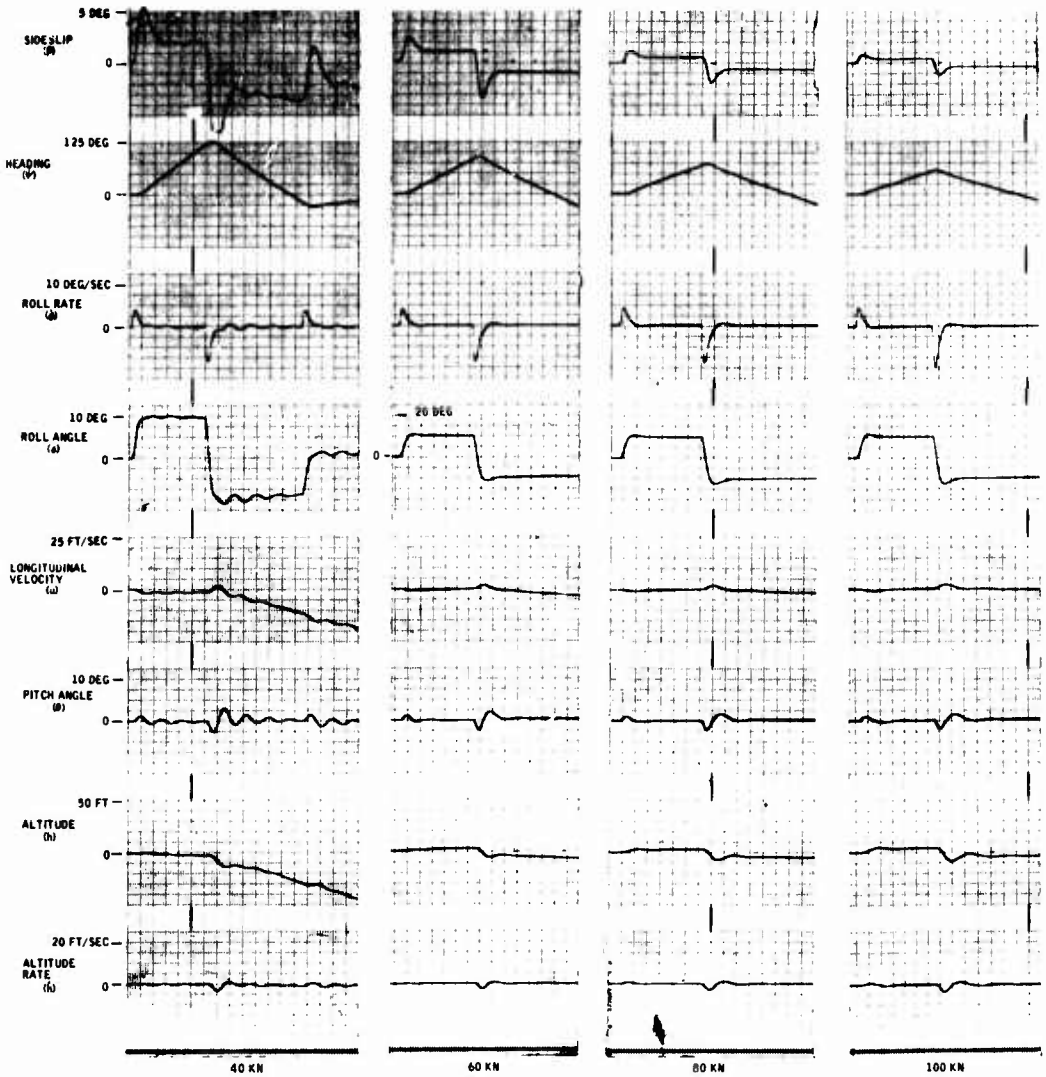

Figure 17. Roll Attitude Hold and Altitude Hold; Roll Angle Command to +10 Degrees and Then to -10 Degrees.

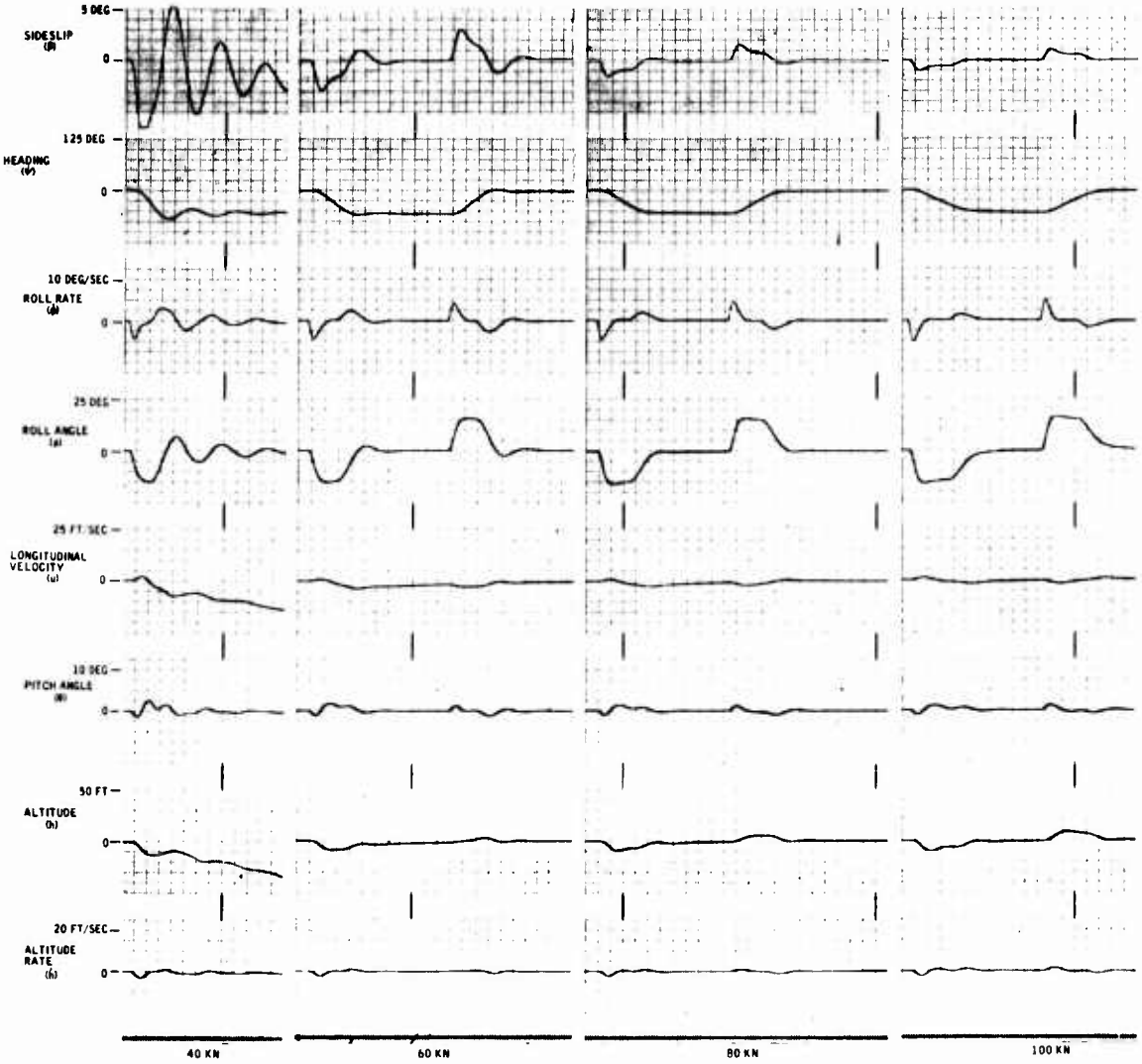

Figure 18. Heading Hold and Altitude Hold; Heading Select Command to 57.3 Degrees and Then to Zero Degrees.

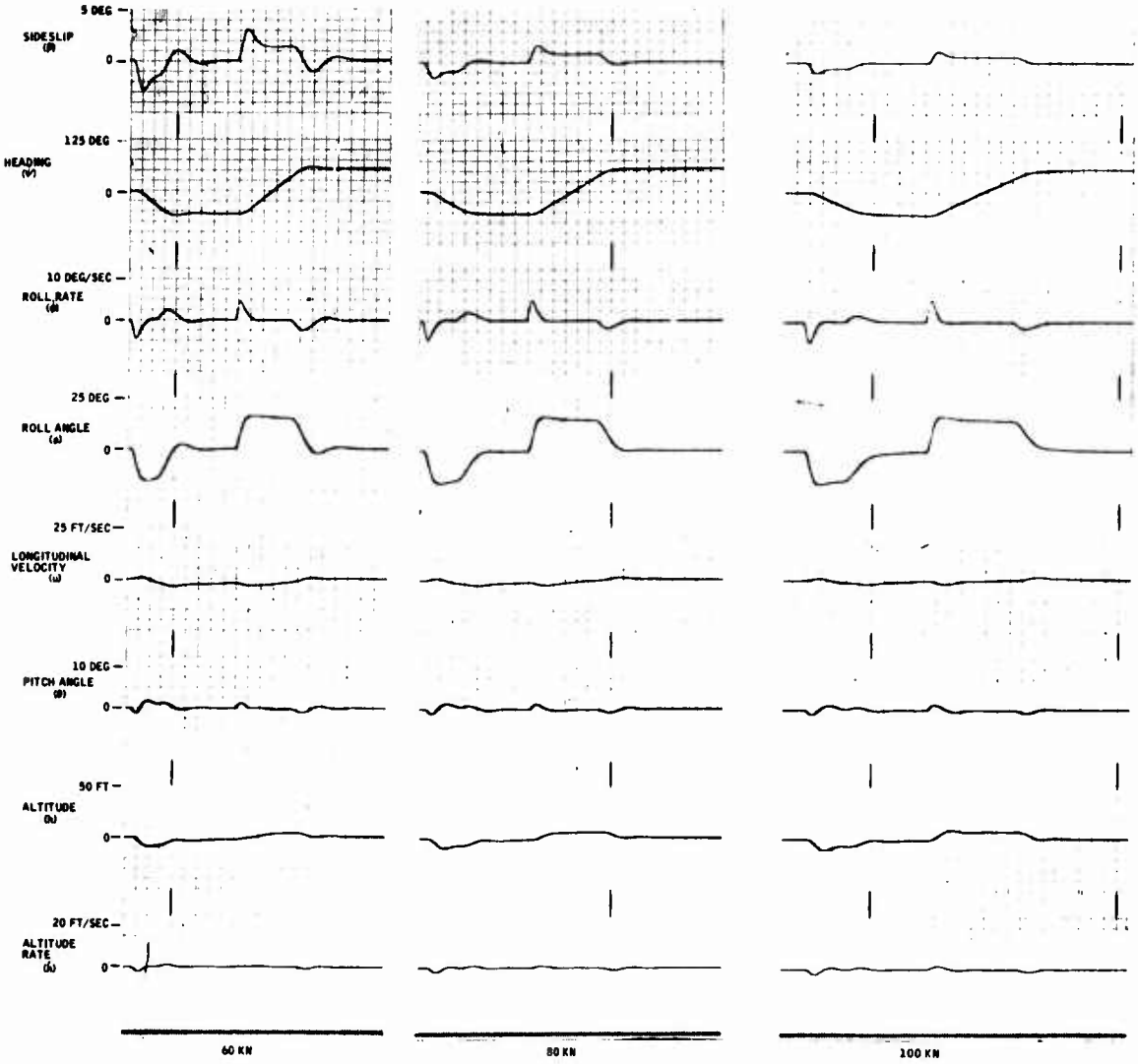

Figure 19. Heading Hold and Altitude Hold; Heading Select Command to ±57.3 Degrees.

TABLE VII. TRANSIENT AND STEADY-STATE ALTITUDE LOSS DURING TURN MANEUVERS		
Airspeed (kn)	Altitude Loss Steady-State (ft)	Altitude Loss Transient (ft)
Roll Angle Command of 10 Degrees		
60	3.0	3.0
80	3.0	3.0
100	4.0	5.0
Heading Command of 57.3 Degrees		
60	8.0	9.0
80	7.0	9.0
100	6.0	10.0

Engage/Disengage Transients

Time responses showing vehicle motions for three types of altitude hold engage/disengage tests are presented in Figures 9 and 10. The tests investigated are as follows:

Type 1 -- Mistrim pitch attitude hold feedback loop to simulate a 2.7-degree change in vehicle trim. Disengage altitude hold.

Type 2 -- Same as Type 1, but adjust pitch trim control until altitude lost due to pitch mistrim is near original reference altitude; then disengage altitude hold.

Type 3 -- Same as Type 1, but adjust pitch trim control to achieve constant altitude.

The 2.7-degree pitch attitude mistrim is the estimated value for vehicle trim change due to cg shifts, calibration accuracy, and bias errors reflected at the vertical gyro.

The Type 1 tests show that as a pitch attitude mistrim develops, and if uncorrected by the pilot, the vehicle will fly to a new altitude because of the action of the attitude feedback to maintain the original trim attitude. The resulting error signal acts as a servoactuator command to maintain the change in vehicle trim. Disengaging altitude hold under these conditions will result in a 2.7-degree command into the system, and the servoactuator will abruptly move 0.5 to 0.6 degree. This servoactuator motion will cause a slight kick in the control stick.

The maximum acceleration was between 0.04 g and 0.06 g and took 2.0 seconds to reach maximum. This level of acceleration is approximately the limit specified in accepted aircraft specifications.

Test Type 2 shows that if the pilot monitors aircraft trim status (attitude and altitude) and trims the system prior to disengagement, the transients will be negligible.

Test Type 3 shows that if disengage is performed under the conditions of Test Type 1, the pilot can readily retrim attitude to maintain constant altitude.

Turn Coordination

Miscoordination in a rolling maneuver can be caused by the natural yaw-axis aerodynamic damping, or action of the yaw damper. The yaw rate which exists in a steady turn creates a yawing moment via the natural yaw-axis aerodynamic damping derivative. If uncontrolled, the vehicle will generate a sideslip angle to balance the yawing moment via the weathercock stability derivative. The result is a static miscoordination.

Turn coordination performance was evaluated for the following inputs: 10-degree heading command, Figure 12; ±10-degree roll attitude command, Figure 17; and 57.3-degree heading commands, Figures 18 and 19.

The performance parameters, β_p and β_{ss}, from these figures are provided in Table VIII.

A general review of Figures 12, 17, 18, and 19 at speeds above 60 knots shows that the transient peak sideslips are relatively short-lived and last for a period of approximately 10 seconds or less, at which time they decay toward zero in the case of a heading command or settle at a steady-state level in the case of the bank commands. The data of Table VIII show that the steady-state levels are all generally less than 1.0 degree.

It is felt that the turn coordination performance exhibited by the time responses and tabulated data will be acceptable to the pilots and that an increase in system complexity to further improve turn coordination is unwarranted.

TABLE VIII. TURN COORDINATION PERFORMANCE

Airspeed (kn)	Peak Sideslip β_p (deg)	Steady-State Sideslip β_{ss} (deg)
Heading Command of 10 Degrees		
60	1.2	0
80	0.7	0
100	0.4	0
Roll Attitude Command of 10 Degrees		
60	2.2	1.0
80	1.2	0.5
100	0.8	0.4
Roll Attitude Command of ±10 Degrees Data Referenced to Straight-and-Level Flight		
60	3.4	1.1
80	1.8	0.6
100	1.2	0.4
Heading Command of 57.3 Degrees		
60	2.8	0
80	1.5	0
100	1.0	0
Heading Command of ±57.3 Degrees		
60	3.0	1.4*
80	1.6	0.8*
100	1.1	0.6*

*These sideslips exist as long as aircraft is banked. When the maneuver is complete, the aircraft rolls to wings level and the sideslips go to zero.

SERIES SERVOACTUATOR DISPLACEMENT LIMITS

Three factors were taken into account in selecting the desired servoactuator displacement limits: (1) series servoactuator range requirements for normal operation, (2) aircraft angular rates resulting from a servoactuator hardover failure, and (3) the effects of the series servoactuator hitting the limit during severe maneuvers or disturbances. The following is a summary of these results.

Range Requirements

The main rotor swashplate and tail rotor control limits used are listed below. These were obtained from Reference 4:

Roll axis = ±10.0 degrees

Pitch axis = ±13.75 degrees

Yaw axis = ±13.0 degrees

The range requirements for the roll, pitch, and yaw series servoactuators are shown in Table IX. These values are calculated by combining the displacements resulting from maneuvers, wind gusts, engage transients, trim changes and component tolerances. Maneuver, wind gust, and engage transient displacements were obtained from the computer simulation of system operation, and displacements from trim changes and component tolerances were calculated based on aircraft data and component null shift data. The displacements were separated into transient and steady-state displacements, with all transient values RSSed and all steady-state values added. The total displacement required was then obtained by adding the transient and steady-state totals. All displacements are shown in terms of degrees of swashplate/control. The total displacements for the three axes are then divided by their respective swashplate/control limits to obtain servoactuator authority required in terms of percentage of control surface motion. As shown in Table IX, the required authorities for the three axes are:

Roll servoactuator = 13.4 percent

Pitch servoactuator = 13.8 percent

Yaw servoactuator = 11.2 percent

Failure Effects

Servoactuator failures were simulated on the computer to determine the resulting helicopter angular rates. Servoactuator failures were assumed to be ramp control linkage displacements at a maximum servoactuator slew rate of 10 inches/second. The simulation results are

TABLE IX. SERIES SERVOACTUATOR RANGE REQUIREMENTS

Cause of Displacement	Displacement (deg swash-plate/control)	
	Transient	Steady-State
Roll Servoactuator		
1. Turn maneuver (15-deg roll angle)	0.75	0
2. Lateral gust (20 ft/sec)	0.80	0
3. Engage transient	0.10	0
4. Trim changes	0	0
5. Component tolerances	0	0.24
	1.10 (RSS)	0.24
	1.34 deg = 13.4% total	
Pitch Servoactuator		
1. Turn maneuver (15-deg roll angle)	0.20	0
2. Lateral gust (20 ft/sec)	0.40	0
3. Vertical gust (10 ft/sec)	0.65	0
4. Engage transient	0.30	0
5. Trim changes (2 hours fuel consumption and ±20 knots airspeed change)	0	0.52
6. Component tolerances	0	0.54
	0.84 (RSS)	1.06
	1.90 deg = 13.8% total	
Tail Rotor (Yaw) Servoactuator		
1. Turn maneuver (15-deg roll angle)	0.15	0
2. Lateral gust (20 ft/sec)	1.20	0
3. Component tolerances	0	0.24
	1.21 (RSS)	0.24
	1.45 deg = 11.2% total	

presented in Table X for both 15-percent series servoactuator authority and for the authority used in the three-axis FSAS. The simulation results were compared with flight test results obtained for the UH-1C without the stabilizer bar and without the FSAS operating, when a step stick input of equivalent swashplate angle was applied. This information was taken from the Final Report for Contract DAAJ02-70-C-0017 (Ref. 3). In general, the flight test results compared relatively well with the simulation results. Where differences occurred, the flight test results showed generally lower angular rates. This is attributed to other factors, such as wind, which were present during the flight test.

TABLE X. ANGULAR RATES FOR SERIES SERVOACTUATOR FAILURE (DEGREES/SECOND)

Airspeed	Servo-actuator Authority	Pitch		Roll		Yaw	
		At 1.0 sec	Peak	At 1.0 sec	Peak	At 1.0 sec	Peak
Hover	15%	10.7	20.7	18.0	18.7	17.0	30.7
	FSAS	13.0	25.1	30.0	31.2	21.9	39.6
80 knots	15%	6.0	6.0	13.5	14.6	7.0	7.3
	FSAS	7.4	7.4	22.5	24.4	9.0	9.4

Series servoactuator authorities for the FSAS were: Pitch - 18.2 percent, roll - 25.0 percent, and yaw - 19.3 percent.

Effects of Servoactuator Hitting Limits

A computer simulation study was made to investigate aircraft motions for commands and disturbances that saturate the series servoactuators. Time responses were recorded for the various flight control modes with servoactuator authority limits set at 10 percent of full swashplate/control travel. In general, relatively large disturbances were required to saturate the servoactuators; and when a servoactuator did saturate, the response became that of the free aircraft, except that the peak rate was reduced by the limited action of the saturated servoactuator. These results indicate that no serious performance degradation occurs for transient saturation of the series servoactuators as a result of severe disturbances and commands.

Based on this analysis, an authority of at least 15 percent is recommended for the roll, pitch and yaw series servoactuators. As servoactuators from the earlier three-axis FSAS program are available for

use in future hardware development of the advanced SAS, it is also recommended that the authority of these servoactuators be approved for use with the advanced SAS. The authorities of these servoactuators are: pitch - 18.2 percent, roll - 25.0 percent, and yaw - 19.3 percent.

SECTION IV
SYSTEM MECHANIZATION

YAW AXIS

A schematic of the yaw axis control is shown in Figure 20. The only mode operating through the yaw axis is the yaw SAS, and its mechanization is the same as used in the earlier three-axis hydrofluidic SAS program (Reference 2). The yaw axis SAS consists of a vortex rate sensor, a pedal displacement transducer, a fluidic amplifier circuit, and the yaw (tail rotor) series servoactuator. Approximate component gains and transfer functions are shown in the schematic of Figure 20.

ROLL AXIS

A schematic of the roll axis control is shown in Figure 21. The roll SAS, roll attitude hold, and heading hold modes operate through the roll axis. The roll SAS mechanization is the same as used in the earlier three-axis hydrofluidic SAS program, except that a low-pass filter has been added to compensate for the low damping in the series servoactuator.

The aircraft instrument gyros are used to provide the roll attitude and heading references for the roll attitude hold and heading hold modes. Loading the MD-1 type vertical gyro used on the UH-1C helicopter with the electrical interface circuit should not present a problem. The electrical interface provides demodulation of the gyro signal and summing of the pitch trim and turn command signals.

The heading signal is actually heading error from a selected heading. The ID-998/ASN radio magnetic indicator, which is used on the UH-1C helicopter, has a heading select function which permits the pilot to set a desired heading and gives a three-wire syncro output proportional to the difference between actual and commanded headings. This signal is demodulated and transduced to fluidic form and then limited in the fluidic circuit. The limit is provided by the saturation of a hydrofluidic amplifier.

The roll attitude hold mode is engaged by closing a solenoid valve in the amplifier circuit. A trim indicator, which is a differential pressure gauge, is included upstream of the solenoid valve to provide a monitor on the circuit null. An electrical switch is used to engage the heading hold mode.

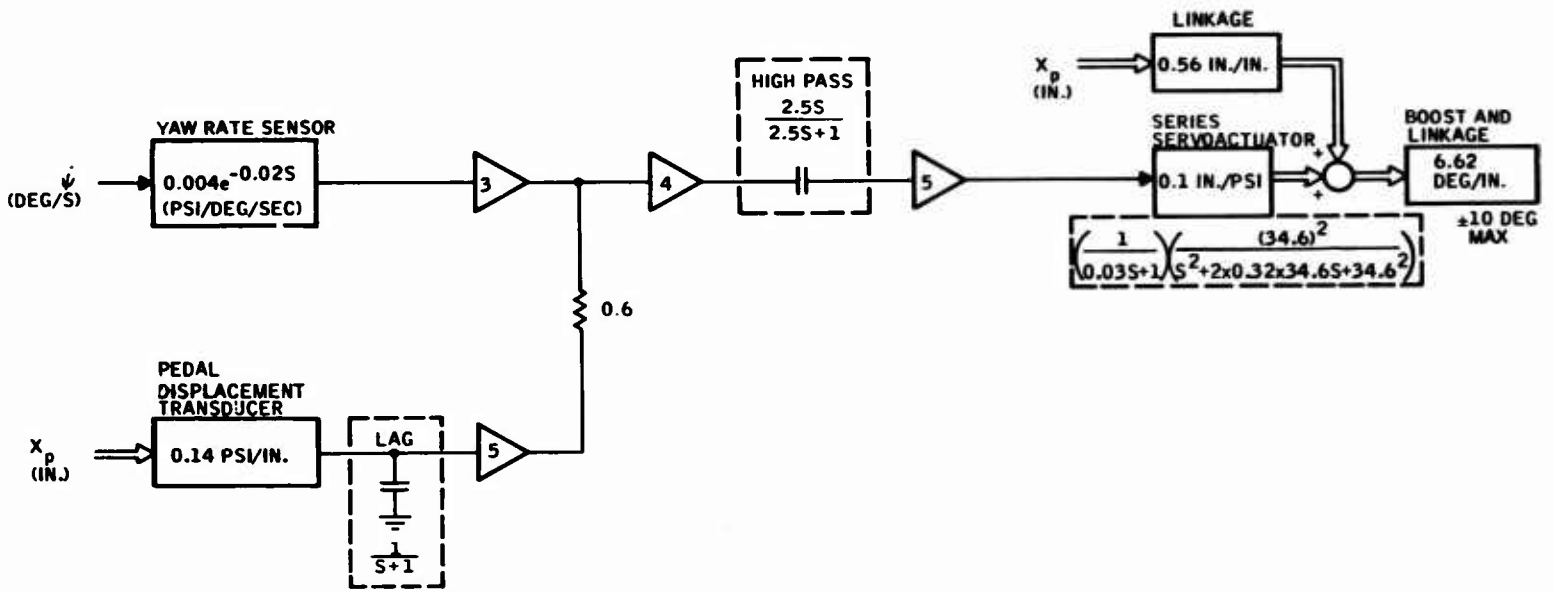

Figure 20. Yaw-Axis Schematic.

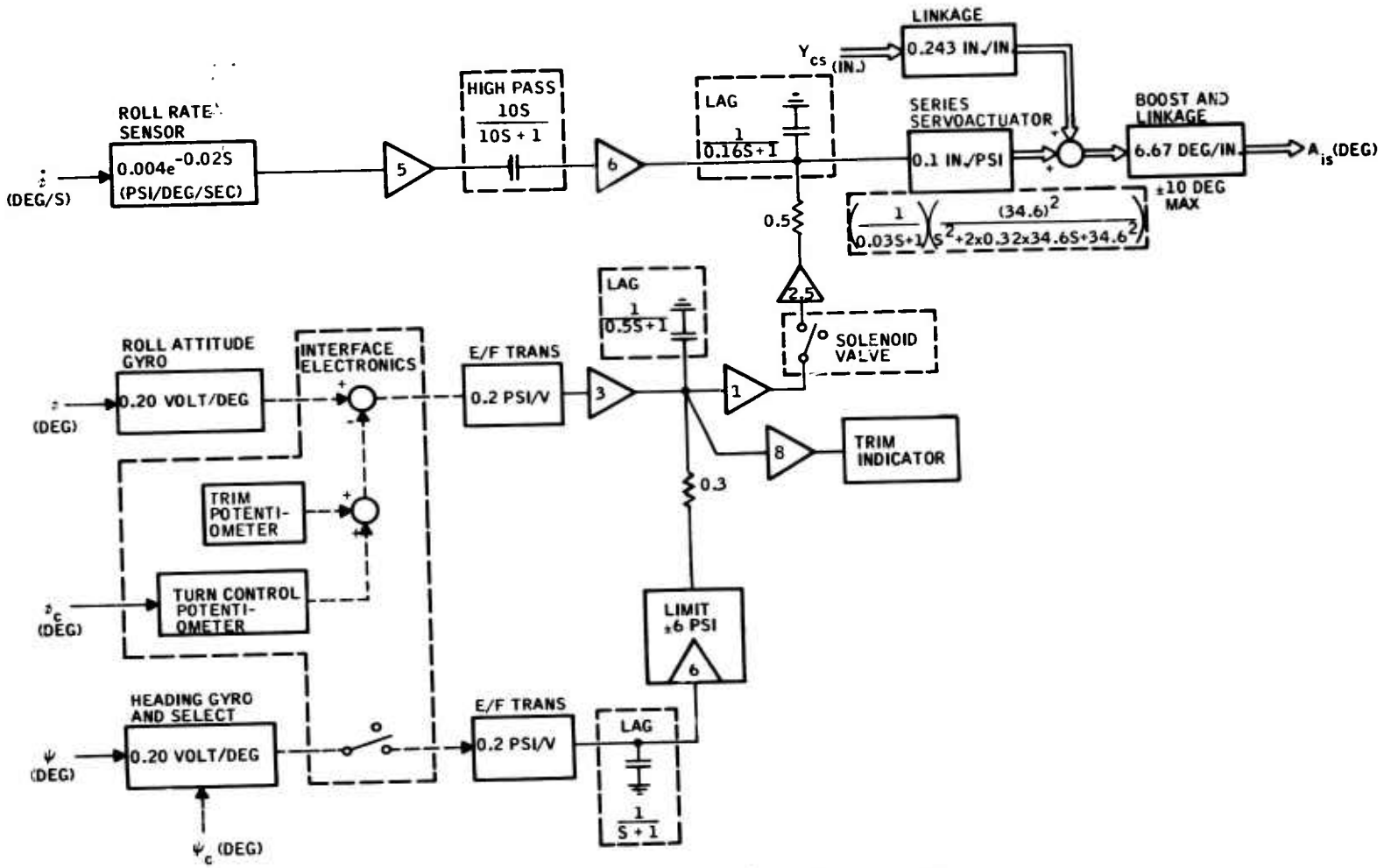

Figure 21. Roll-Axis Schematic.

Approximate component gains and transfer functions are shown in the schematic of Figure 21.

PITCH AXIS

A schematic of the pitch-axis control is shown in Figure 22. The pitch SAS, pitch attitude hold, and altitude hold modes operate through the pitch axis. The pitch SAS is the same as used in the earlier three-axis hydrofluidic SAS program (Reference 2). The pitch attitude hold mechanization is very similar to that of the roll attitude hold.

The pitch attitude reference signal is obtained from the MD-1 type vertical gyro presently used on the helicopter. The altitude error sensor is a fluidic sensor which provides an output signal proportional to the difference between the reference altitude and actual altitude. A double bellows is used to convert differential air pressure into a hydrofluidic pressure signal.

The altitude hold mode is engaged by closing a solenoid valve in the sensor, which traps the reference pressure. The pitch attitude mode is engaged by closing a solenoid valve in the fluidic circuit. A trim potentiometer and a trim indicator are provided to minimize circuit null offsets prior to engaging these modes.

Approximate component gains and transfer functions for the pitch axis are shown in the schematic of Figure 22.

FUNCTION SELECTOR

Operation of the advanced hydrofluidic stabilization system is accomplished through a cockpit panel-mounted flight controller. The basic mode control circuits are mechanized electrically as shown in Figure 23. The following is a short description of how the pilot interfaces with the system during operation.

The power switch on the system control panel must first be placed in the ON position when aircraft electrical and hydraulic power becomes available. The channel engage switches must be placed in the ON position prior to operation of the master engage switch. With the master engage switch ON, the system will engage in the stability augmentation mode.

The individual axes can then be disengaged without causing the master switch to go OFF. Operation of the emergency disengage, or moving the master engage switch to the OFF position, will disengage the system.

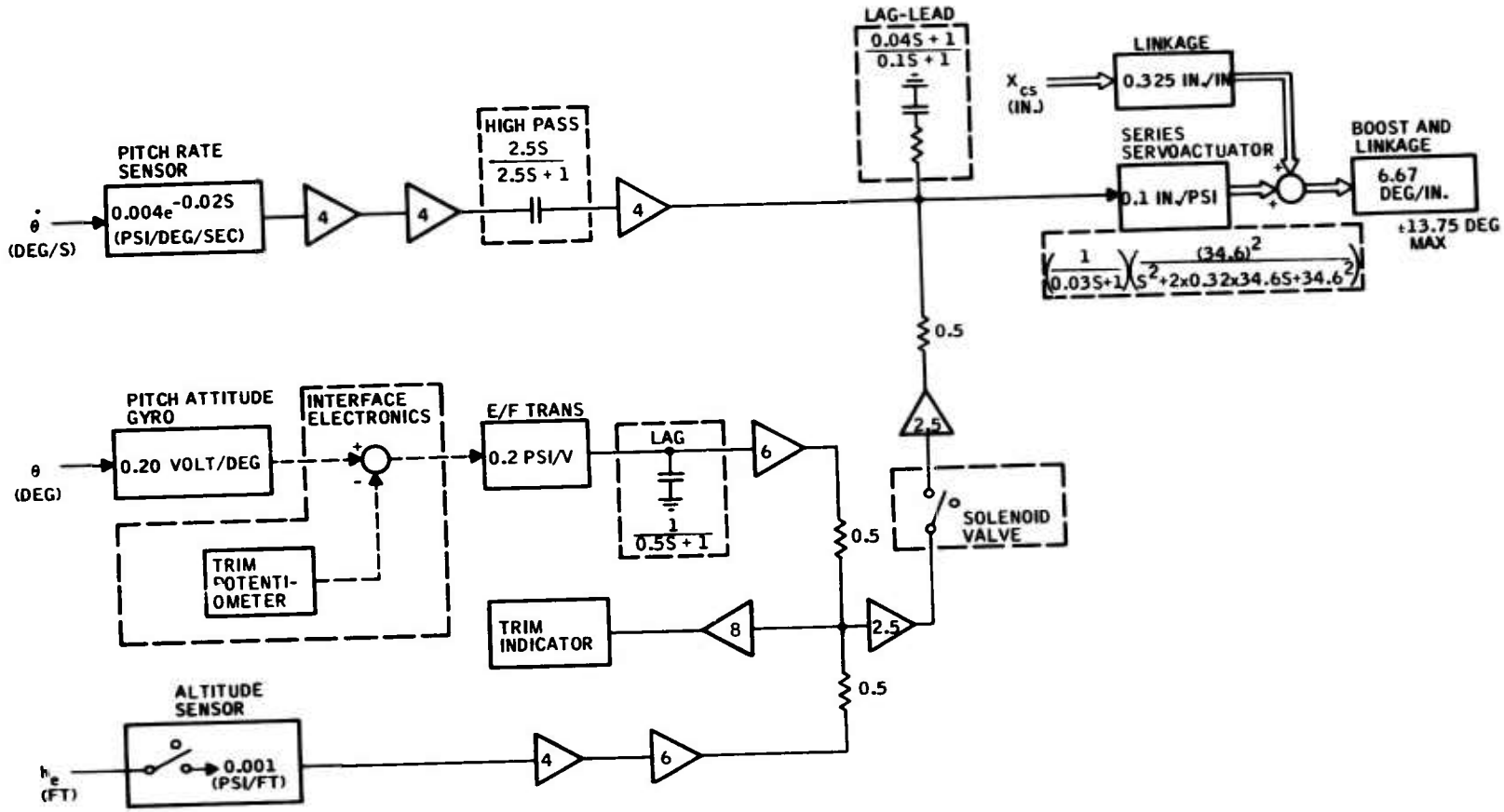

Figure 22. Pitch-Axis Schematic.

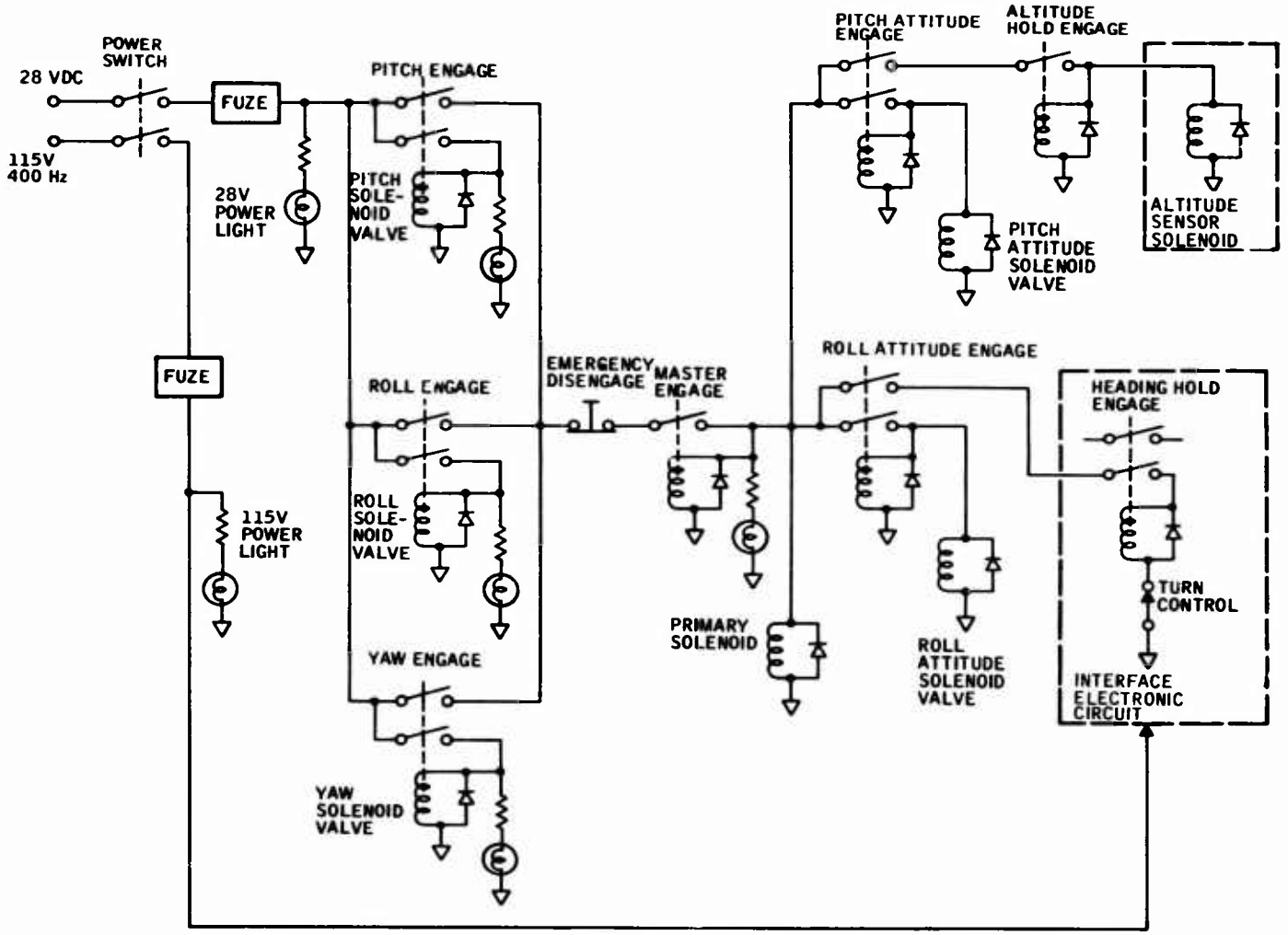

Figure 23. System Electrical Interconnection Diagram.

After the system is engaged in the stability augmentation mode, engagement of outer loop modes becomes possible. Before engaging the outer loop modes, the pitch and roll trim should be manually adjusted with the pitch and roll trim knobs to minimize engage transients. Placing the pitch and roll attitude engage switches in the ON position closes solenoid valves in the fluidic amplifier circuit, and attitude will remain at the engage value.

The turn control is used to command bank angles. Once the roll attitude hold mode is engaged, the turn control can command bank angles between ± 15 degrees. Bank angles are limited to ± 15 degrees since at higher bank angles the loss of lift will result in loss of altitude in the turn.

When the pitch and roll attitude hold modes are engaged, altitude and heading modes can be engaged. The recommended conditions for engagement of altitude hold are at rates of climb/dive less than 100 ft/min and at speeds greater than 50 knots IAS. This mode is designed for relatively constant-speed operation. Engaging the altitude hold switch closes the reference bellows on the altitude control. Deviations from this altitude provide error signals to command the aircraft back to the reference altitude. Speed changes during altitude hold mode will result in altitude changes to compensate for the aircraft trim attitude change. The altitude hold mode will disengage when the pitch attitude hold mode is disengaged or when the altitude hold switch is turned off.

If the pilot wishes to engage heading hold to the heading existing at the time of engagement, he must set the heading select indicator to that heading. Placing the heading hold switch to the ON position will engage the heading hold mode, providing that the turn control switch is in detent. Changes in heading can be commanded by moving the heading select knob to the new heading while the mode is engaged; or the heading switch can be disengaged, the new heading selected, and the heading mode reengaged. The aircraft will then fly the shortest turn to the selected heading. The bank angle is limited during heading select maneuvers to ± 15 degrees.

Heading hold will automatically disengage when the turn control is moved out of detent or the roll attitude hold mode is disengaged. Moving the heading engage switch to the OFF position will also disengage the mode.

SYSTEM INSTALLATION

The mechanical, hydraulic, and electrical installation of the advanced SAS would be similar to that described in Reference 3 for the three-axis FSAS flight test, with the addition of the electrical connections to the aircraft instrument pitch and roll gyro and to the course indicator.

The mechanical stabilizer bar would be removed and replaced with fixed brackets that connect the control tubes directly to the main rotor blades. The servoactuators would be located below the floor in series with the control tubes of the vehicle. The fluidic computer assembly, including the rate sensors and the altitude sensor, would be mounted to the floor of the aircraft, and hydraulic connection to the servoactuators would be made with flexible hoses.

Hydraulic power for the system would be obtained from the aircraft's No. 2 boost hydraulic system.

The function selector would be mounted on the pilot's console, and an emergency disengage switch would be provided for the pilot on his cyclic control stick.

COMPONENT MECHANIZATION

The mechanizations selected for the components of the advanced hydrofluidic stabilization system are summarized in Table XI, along with their general transfer function forms. More specific performance information is included in the System Specification in Section V of this report. The component studies performed during this program are described in Appendix IV of this report.

TEMPERATURE COMPENSATION

During the program, several approaches to reducing system gain variation with change in oil temperature were investigated. Most of the gain change comes from the amplifier elements, although the rate sensor also contributes to the overall variation.

The approach finally selected for temperature compensation of the system is to schedule system supply flow as a function of oil temperature. Tests have shown that an increase in oil viscosity (decrease in oil temperature) and a decrease in supply flow have essentially the same effect of reducing the gain of the hydrofluidic components. Therefore, if supply flow could be increased when oil temperature is low, the resultant gain should remain relatively constant.

TABLE XI. COMPONENT MECHANIZATIONS

Control Element	System Function (possible)	Type Mechanization	Transfer Function Form
Rate Sensor	SAS feedback for pitch, roll, and yaw axes	Vortex rate sensor	Ke^{-TS}
Attitude Sensor	Pitch and roll attitude	Electrical display VG and E/F transducers	$\frac{K}{TS+1}$ $T < 0.01$
	Heading reference	Electrical display DG and E/F Transducer	$\frac{K}{TS+1}$ $T < 0.01$
Altitude Sensor	Altitude hold mode reference (altitude error)	Barometric - Aneroid bellow system linked to fluidic pickoff	$\frac{K}{TS+1}$
Amplification and Summing Circuit	Combine and amplify all pitch, roll, and yaw inputs	Hydrofluidic amplifiers and orifice resistor networks	K
Dynamic Shaping Network	Shaping and filtering of system signals	Resistor (orifice) - capacitor (bellows) circuit	$\left(\frac{1}{TS+1}\right)$, $\left(\frac{TS}{TS+1}\right)$ $\left(\frac{T_1S+1}{T_2S+1}\right)$
Limit	Limiting for attitude and heading control	Hydrofluidic amplifier	
Switch	Engage and mode switching	Solenoid valve/(electrically operated)	
Position Transducer	Rudder pedal position	Mechanical-to-fluidic potentiometer	K
Servoactuator (Series)	Pitch, roll, and yaw axes	Hydraulic with mechanical feedback (proportional) and fluidic input	$\frac{W^2}{S^2+2\zeta WS+W^2}$
Trim Indicator	Pitch and roll trim indication (pre-engage)	Differential pressure gauge	

To accomplish this increase in supply flow at low oil temperature, a temperature scheduled flow control valve was developed. A description of the design and performance of this device is included in Appendix IV of this report.

As this approach requires higher than normal system flow consumption at low oil temperature, a parallel effort was made to reduce the nominal flow consumption of the individual components. Both a smaller rate sensor pickoff and a smaller individual amplifier element were fabricated and tested on this program with good results. These smaller components will make it possible to operate at approximately 60 percent of the system supply flow that would be required with the larger components previously used. This should make it possible to schedule system supply flow without requiring more flow at low temperature than the aircraft's No. 2 boost hydraulic system can supply.

SECTION V
PERFORMANCE, DESIGN, AND QUALIFICATION REQUIREMENTS FOR AN ADVANCED HYDROFLUIDIC STABILIZATION SYSTEM

1.0 SCOPE

This specification defines the preliminary design requirements for the Advanced Hydrofluidic Stabilization System, hereafter referred to as the "system." The objective of this system is to provide a reliable, low-cost automatic flight control system incorporating pilot relief modes.

2.0 APPLICABLE DOCUMENTS

The following documents and the applicable specifications referenced therein shall apply to the extent specified herein:

a. MIL-H-8501A, Helicopter Flying and Ground Handling Qualities, General Requirements for.

b. MIL-H-5606, Hydraulic Fluid, Petroleum Base, Aircraft, Missile and Ordnance.

c. MIL-STD-810B, Military Standard Environmental Test Methods for Aerospace and Ground Equipment.

3.0 REQUIREMENTS

3.1 General

3.1.1 Modes of Operation

The system shall be capable of controlling the helicopter in the following modes:

a. Stability augmentation (three axes)

b. Attitude hold (pitch and roll)

c. Heading hold and select

d. Altitude hold

3.1.2 Service Flight Envelope

The flight envelope for operation of the various system modes shall be as defined below.

a. Airspeed:

- Stability augmentation -- Hover to maximum cruise
- Attitude hold -- 50 knots to maximum cruise
- Heading and altitude hold -- 50 knots to maximum cruise

b. Altitude: All modes -- 0 to 6000 feet

3.1.3 Functional Components

The system shall consist of the following functional units:

a. Attitude Sensor -- The system shall have two attitude sensors, one for sensing aircraft yaw attitude (heading) and a second vertical attitude reference for sensing aircraft pitch and roll attitude. These sensors will also be used for display of aircraft attitude.

b. Rate Sensor -- Each axis shall have a vortex rate sensor, which provides a signal that is proportional to the aircraft angular rate in the specific axis.

c. Altitude Error Sensor -- The system shall have an altitude sensor which provides a signal proportional to the difference between aircraft actual altitude and a particular reference altitude (altitude existing at time of engaging).

d. Rudder Input Device -- This device provides a signal which is a function of rudder pedal displacement. This signal reduces the tendency of the rate damper to "fight" pilot inputs in the yaw axis.

e. Interface Electronic Circuit -- An electrical circuit shall be provided to process the outputs of the panel display attitude sensors, so as to transform them to a form compatible with the electrical-to-fluidic transducers.

f. Electric-to-Fluidic Transducer -- E/F transducers shall be used to transform the electrical attitude signals to fluidic signals.

g. Amplifier Circuits -- Fluidic amplifier circuits shall be used to sum, amplify, and limit differential pressure signals in the system.

h. Shaping Networks -- A combination of resistors (orifices) and capacitors (bellows) shall be used to provide the following functions:

   1. Lag -- With a characteristic of $1/(TS + 1)$

   2. High-pass -- With a characteristic of $TS/(TS + 1)$

   3. Lag-lead -- With a characteristic of $(TS+1)/(NTS+1)$ where T is time constant and N is greater than 1.0.

i. Servoactuator -- The servoactuator, mounted in series with the aircraft power boost servoactuators, accepts differential pressure signals and converts them to displacements of the power boost servoactuator pilot valve.

j. Trim Indicator -- Trim indicators shall be provided in the system outer loops to monitor signal nulls prior to engagement of these modes.

k. Engage Valve -- Solenoid-operated hydraulic valves will be remotely controlled from the cockpit to engage all or part of the system.

l. Flow Control Valve -- This device shall maintain a constant flow to the fluidic system.

m. Back Pressure Regulator -- This device shall isolate servoactuator induced return pressure surges from the fluidic system.

n. Flight Controller -- This component provides the controls needed to engage and operate the system modes. It contains a turn control knob; switches to engage or disengage the SAS, pitch attitude hold, roll attitude hold, heading hold and altitude hold modes; pitch and roll trim knobs; and pitch and roll trim indicators.

3.2 Environment

The system shall perform satisfactorily when exposed to the following environmental conditions:

a. Vibration -- MIL-STD-810B, Figure 514-1, Curve B.

b. Temperature -- The system shall be able to start at -25°F ambient temperature with the fluid at -25°F and then operate satisfactorily with an ambient temperature of -25°F with the fluid temperature at +40°F up to an ambient temperature of +100°F with the fluid temperature at +185°F.

c. Supply Flow and Pressure Variations -- The system shall be able to withstand the supply flow and pressure variations determined from previous programs to be normally occurring in the selected aircraft hydraulic supply system.

3.3 Power Supplies

Input power to the system shall be hydraulic fluid per Specification MIL-H-5606 at a pressure of 1500 psig (nominal), which is obtained from the aircraft No. 2 hydraulic power system. The system (except augmentation servoactuators) shall not require more than 3.0 gpm.

Electrical power for relays and solenoids will be 28 vdc. Power for the electrical interface circuit will be 115 volts, 400 Hz.

3.4 Detailed Performance Requirements

The performance requirements for the system are defined in Table XII. These requirements are applicable to the UH-1C helicopter operating within the flight envelope as specified in 3.1.2.

3.5 System Open-Loop Performance

All performance requirements in this section pertain to normal operating conditions. Normal operating conditions are defined as: ambient temperature, 70° ±10°F; hydraulic fluid temperature, 120° ± 10°F; hydraulic fluid pressure, 1000 to 1500 psig ahead of flow regulator, with a maximum of 20 psig return pressure.

3.5.1 Lateral-Directional Axes

The hardware schematic of this part of the system is shown in Figures 24 and 25. The performance requirements for the individual modes are summarized below.

3.5.1.1 Yaw Axis SAS -- Yaw axis SAS requirements are summarized in the block diagram of Figure 26. The hardware schematic is shown in Figure 24. Additional performance requirements are listed below.

TABLE XII. DETAILED PERFORMANCE REQUIREMENTS

System Mode or Function	Characteristic	Requirements
3.4.1 Pitch Stability Augmentation	Dynamic stability	The helicopter shall exhibit satisfactory dynamic stability characteristics following longitudinal disturbances in forward flight. Specifically, the stability characteristics shall be unacceptable if the following are not met for a single disturbance in smooth air: a) Any oscillation having a period of less than 5 seconds shall damp to one-half amplitude in not more than 2 cycles, and there shall be no tendency for undamped small-amplitude oscillations to persist. b) Any oscillation having a period greater than 5 seconds but less than 10 seconds shall be at least lightly damped. c) Any oscillation having a period greater than 10 seconds but less than 20 seconds shall not achieve double amplitude in less than 10 seconds.
	Control power	Longitudinal control power shall be such that when the helicopter is hovering in still air at the maximum overload gross weight or at the rated power, a rapid 1.0-inch step displacement from trim of the longitudinal control shall produce an angular displacement at the end of 1.0 second, which is at least 2.0 degrees.
	Damping	The pitch axis damping ratio of the UH-1 helicopter shall be increased from approximately 0.3 to approximately 0.5 or greater at or near the 100-knot flight condition. This value may be demonstrated by a simulated vertical gust input and measuring the aircraft performance in damping the gust. The vertical gust input shall be damped to within 20 percent of its maximum value within 1.5 seconds following the gust. At the hover flight condition, the time to damp the gust may be significantly longer to account for the free vehicle damping characteristics.
3.4.2 Roll Stability Augmentation	Response	The response of the helicopter to lateral control deflection, as indicated by the maximum rate of roll per inch of sudden control deflection from the trim setting, shall not be so high as to cause a tendency for the pilot to overcontrol unintentionally. In any case, at all levels of flight speeds, including hovering, the control effectiveness shall be considered excessive if the maximum rate of roll per inch of stick displacement is greater than 20 degrees per second.
	Control power	Lateral control power shall be such that when the helicopter is hovering in still air at the maximum overload gross weight or at the rated power, a rapid 1-inch step displacement from trim of the lateral control shall produce an angular displacement at the end of one-half second (0.5) of at least 1.2 degrees.
3.4.3 Yaw Stability Augmentation	Response	The response of the helicopter to directional control deflection, as indicated by the maximum rate of yaw per inch of sudden pedal displacement from trim while hovering, shall not be so high as to cause a tendency for the pilot to overcontrol unintentionally. In any case, the sensitivity shall be considered excessive if the yaw displacement is greater than 50 degrees in the first second following a sudden displacement of 1.0 inch from trim while hovering at the lightest normal service loading.
	Control power	Directional control power shall be such that when the helicopter is hovering in still air at the maximum overload gross weight or at rated takeoff power, a rapid 1.0-inch step displacement from the trim of the directional control shall produce a yaw displacement at the end of 1.0 second which is at least 5.0 degrees.
	Damping	The directional axis damping ratio of the UH-1 helicopter shall be increased from approximately 0.3 to approximately 0.6 or greater at the high-speed flight conditions. This value may be demonstrated by a simulated lateral gust input and measuring the aircraft performance in damping the gust.

TABLE XII - Continued

System Mode or Function	Characteristic	Requirements
3.4.4 Roll Attitude Hold	Accuracy (steady state)	The referenced roll attitude shall be maintained within ±1.0 degree.
	Response	Response to an attitude command shall be smooth and rapid with less than 20 percent overshoot. Response time shall be less than 3 seconds.
	Solution time	Solution time shall be less than 5 seconds.
	Command maneuver limit	±30 degrees (using flight controller).
3.4.5 Heading Hold and Select	Accuracy (steady state)	The reference heading shall be maintained to within ±1.0 degree
	Response	Response to a heading error shall be smooth and rapid with one overshoot which shall not exceed 20 percent or 5 degrees, whichever is smaller. Response time shall be between 5 and 20 seconds.
	Heading select range	Existing heading ±180 degrees.
	Maximum bank angle limit	±15 degrees.
3.4.6 Pitch Attitude Hold	Accuracy (steady state)	The referenced pitch attitude shall be maintained within ±0.5 degree.
	Response	Response to an attitude command shall be smooth and rapid with less than 20 percent overshoot. Response time shall be less than 4 seconds.
	Command maneuver limit	No provisions for maneuvering in pitch are provided in the flight controller.
3.4.7 Altitude Hold	Accuracy (steady state), straight and level and in turns within roll limits of ±15 degrees	Referenced altitude shall be maintained within ±20 feet. (±50 feet for ±30 degrees roll attitude)
	Response	Response to an altitude step shall be smooth with less than 20 percent overshoot.
3.4.8 Turn Coordination	Steady-state sideslip during turns within roll limits of ±15 degrees	Steady-state sideslip angle shall be less than 2.0 degrees.
3.4.9 System Authority	Series servoactuator displacement limits	Series servoactuator displacement limits shall be limited to the following values expressed in percent of total surface limits. • Pitch - 20 percent • Roll - 25 percent • Yaw - 20 percent
3.4.10 Engagement/ Disengagement	Switching transients	Engagement/disengagement of any of the system modes at steady-state conditions shall not result in helicopter transients in excess of 0.05 g.

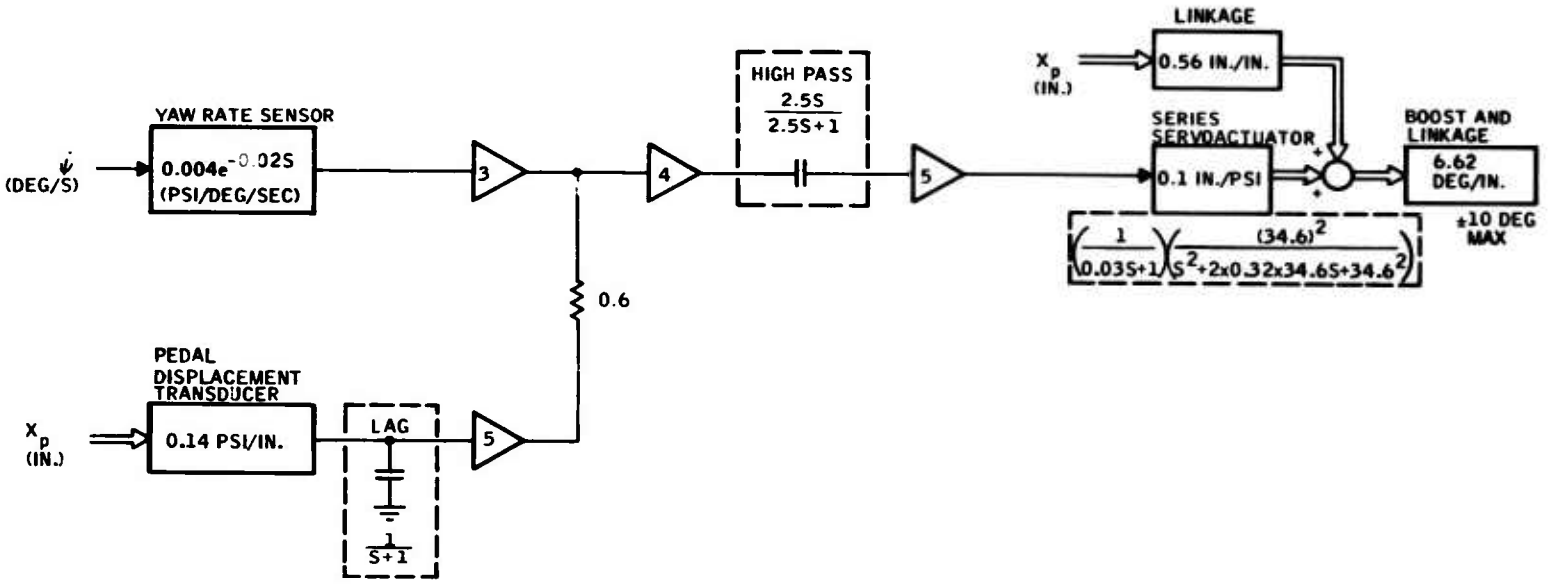

Figure 24. Yaw-Axis Schematic.

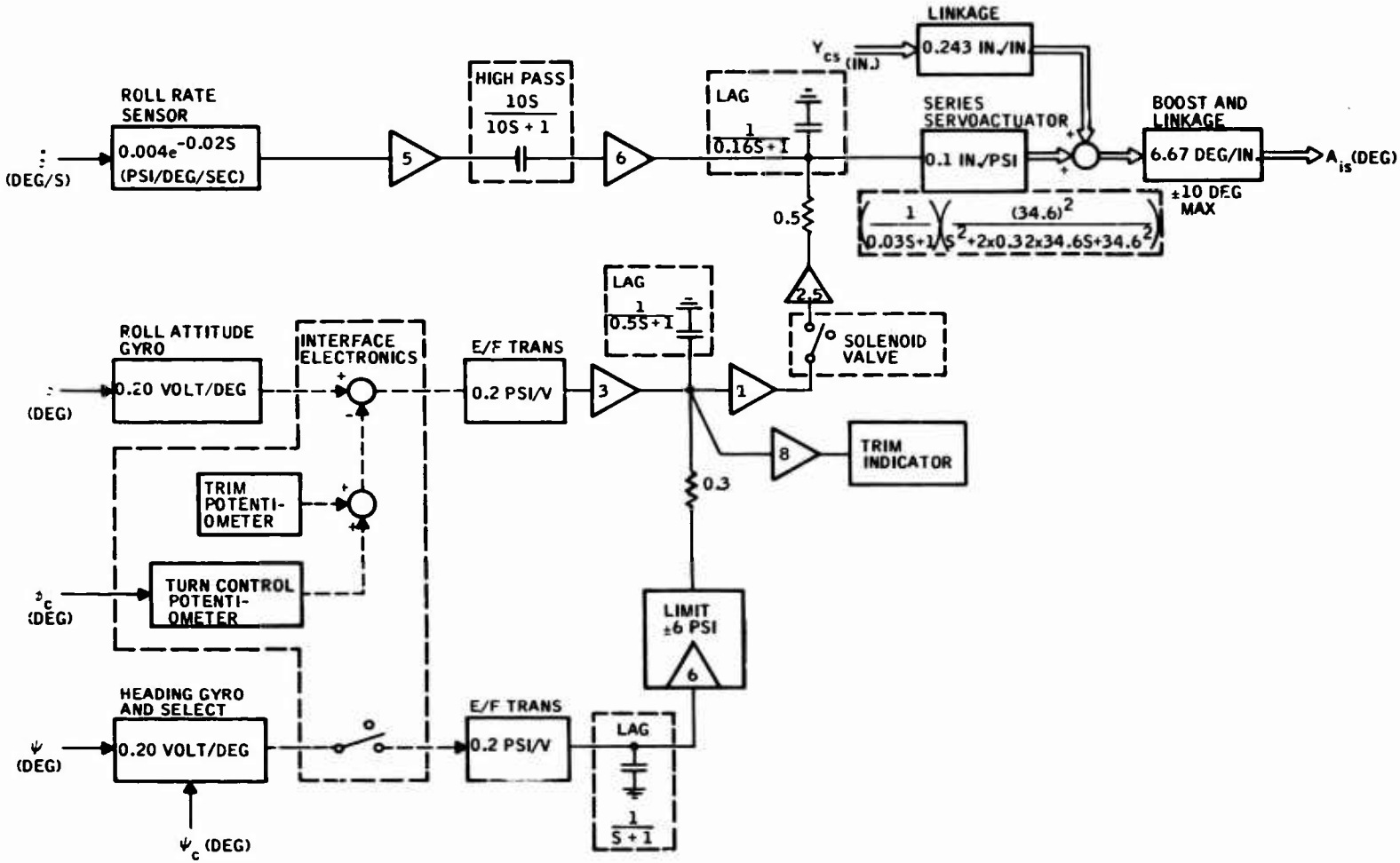

Figure 25. Roll-Axis Schematic.

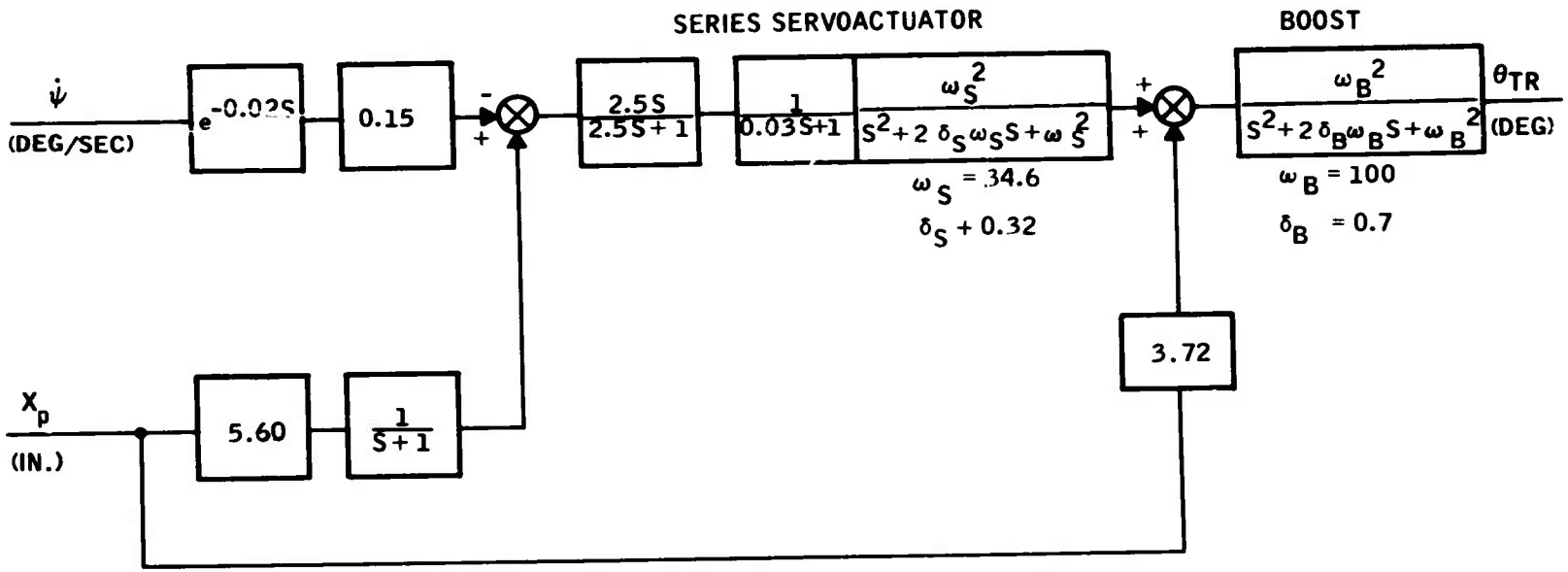

Figure 26. Yaw-Axis Requirements.

a. Transfer Functions: The nominal transfer functions for the yaw rate feedback loop (yaw rate to series servoactuator displacement) and rudder pedal position input loop (pedal position to series servoactuator displacement) shall be the form shown below.

$$\frac{\text{Servoactuator Displacement}}{\text{Yaw Rate}} = 0.023\, e^{-0.02S} \left(\frac{2.5S}{2.5S+1}\right) \left[\frac{1200}{(0.03S+1)(S^2+22S+1200)}\right] \frac{\text{in.}}{\text{deg/sec}}$$

$$\frac{\text{Servoactuator Displacement}}{\text{Pedal Displacement}} = 0.84 \left(\frac{1}{S+1}\right) \left(\frac{2.5S}{2.5S+1}\right) \left[\frac{1200}{(0.03S+1)(S^2+22S+1200)}\right] \frac{\text{in.}}{\text{in.}}$$

b. Range: The range shall be at least ±40 deg/sec ahead of the high-pass and ±100 percent actuator stroke downstream of the high-pass.

c. Noise: Peak-to-peak noise at the actuator shall not exceed an equivalent of ±0.5 deg/sec yaw rate at maximum dynamic gain.

d. Accuracy: Gain and time constants shall be maintained within ±20 percent of the nominal requirements.

3.5.1.2 Roll Axis SAS -- Roll axis SAS requirements are summarized in the block diagram of Figure 27. The hardware schematic is shown in Figure 25. Additional performance requirements are listed below.

a. Transfer Function: The nominal transfer function for the roll rate feedback loop (roll rate to series servoactuator displacement) shall be the form shown below.

$$\frac{\text{Servoactuator Displacement}}{\text{Roll Rate}} = 0.012\, e^{-0.02S} \left(\frac{10S}{10S+1}\right) \left(\frac{1}{0.16S+1}\right) \left[\frac{1200}{(0.03S+1)(S^2+22S+1200)}\right] \frac{\text{in.}}{\text{deg/sec}}$$

b. Range: The range shall be at least ±40 deg/sec ahead of the high-pass and ±100 percent actuator stroke downstream of the high-pass.

c. Noise: Peak-to-peak noise at the actuator shall not exceed an equivalent of ±0.5 deg/sec roll rate at maximum dynamic gain.

d. Accuracy: Gain and time constants shall be maintained within ±20 percent of the nominal requirements.

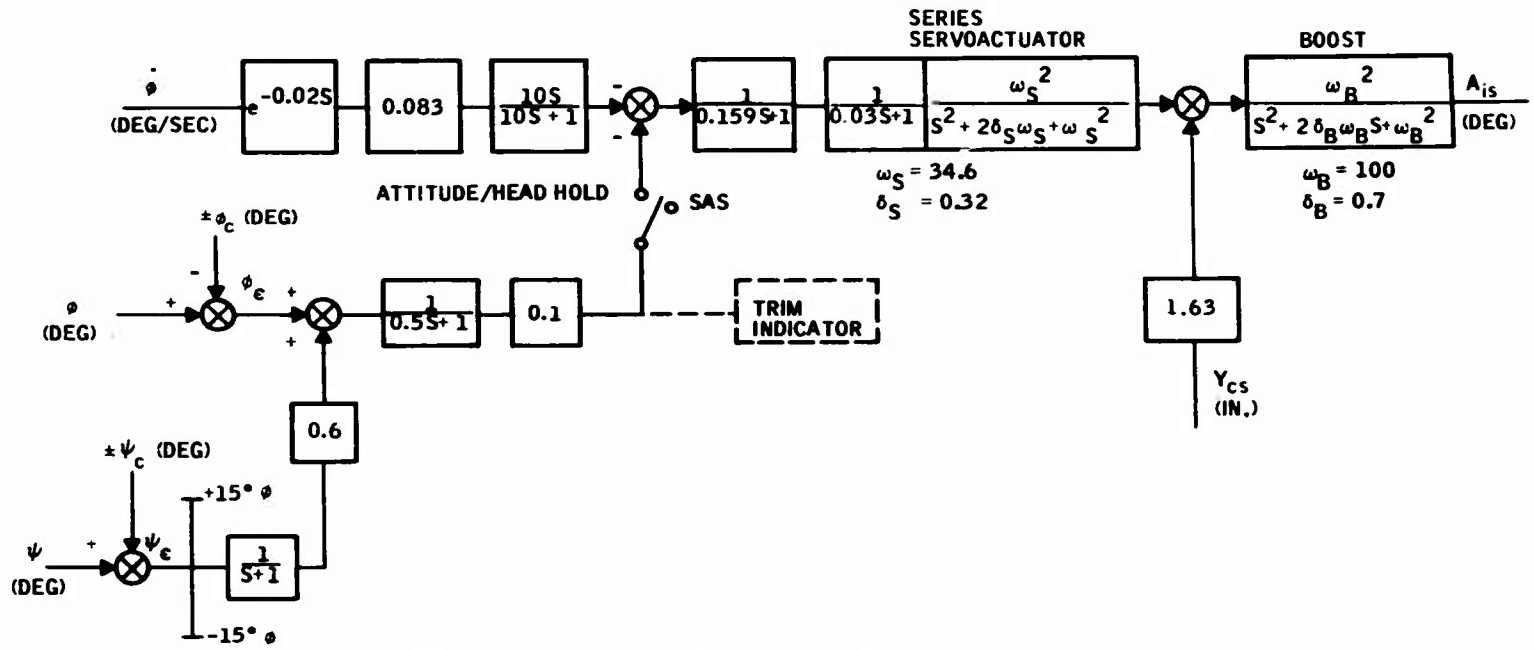

Figure 27. Roll-Axis Pilot Assist Functions.

3.5.1.3 Roll Attitude Hold -- Roll attitude hold requirements are summarized in the block diagram of Figure 27. The hardware schematic is shown in Figure 25. Additional performance requirements are listed below.

a. Transfer Function: The nominal transfer function for the roll attitude feedback loop (roll attitude to series servoactuator displacement) shall be the form shown below.

$$\frac{\text{Servoactuator Displacement}}{\text{Roll Attitude}} = 0.015 \left(\frac{1}{0.5S+1}\right)\left(\frac{1}{0.16S+1}\right)\left[\frac{1200}{(0.03S+1)(S^2+22S+1200)}\right]\frac{\text{in.}}{\text{deg}}$$

b. Range: The range shall be at least ±100 percent actuator stroke (25 degrees equivalent roll attitude) through the roll attitude loop.

c. Noise: Peak-to-peak noise at the actuator shall not exceed an equivalent of ±0.5 degree roll attitude.

d. Accuracy: Gain and time constants shall be maintained within ±20 percent of the nominal requirements.

3.5.1.4 Heading Hold -- Heading hold requirements are summarized in the block diagram of Figure 27. The hardware schematic is shown in Figure 25. Additional performance requirements are listed below.

a. Transfer Function: The nominal transfer function for the heading loop (heading error to series servoactuator displacement) shall be the form shown below.

$$\frac{\text{Servoactuator Displacement}}{\text{Heading Error}} = 0.009 \left(\frac{1}{S+1}\right)\left(\frac{1}{0.5S+1}\right)\left(\frac{1}{0.16S+1}\right)\left[\frac{1200}{(0.03S+1)(S^2+22S+1200)}\right]\frac{\text{in.}}{\text{deg}}$$

b. Range: The range of the heading loop shall be limited to an equivalent of ±15 degrees roll attitude ahead of the point where the heading and roll attitude signals are summed.

c. Noise: Peak-to-peak noise at the actuator shall not exceed an equivalent of ±1.0 degree heading error.

d. Accuracy: Gain and time constants shall be maintained within ±20 percent of the nominal requirements.

3.5.2 Longitudinal-Vertical Axes

The hardware schematic of this part of the system is shown in Figure 28. The performance requirements for the individual modes are summarized below.

3.5.2.1 Pitch Axis SAS -- Pitch axis SAS requirements are summarized in the block diagram of Figure 29. The hardware schematic is shown in Figure 28. Additional performance requirements are listed below.

a. Transfer Function: The nominal transfer function for the pitch rate feedback loop (pitch rate to series servoactuator displacement) shall be the form shown below.

$$\frac{\text{Servoactuator Displacement}}{\text{Pitch Rate}} = 0.026\, e^{-0.02S} \left(\frac{2.5S}{2.5S+1}\right) \left(\frac{0.04S+1}{0.1S+1}\right) \left[\frac{1200}{(0.03S+1)(S^2+22S+1200)}\right] \frac{\text{in.}}{\text{deg/sec}}$$

b. Range: The range shall be at least ±40 deg/sec ahead of the high-pass and ±100 percent actuator stroke downstream of the high-pass.

c. Noise: Peak-to-peak noise at the actuator shall not exceed an equivalent of ±0.5 deg/sec pitch rate at maximum dynamic gain.

d. Accuracy: Gain and time constants shall be maintained within ±20 percent of the nominal requirements.

3.5.2.2 Pitch Attitude Hold -- Pitch attitude hold requirements are summarized in the block diagram of Figure 29. The hardware schematic is shown in Figure 28. Additional performance requirements are listed below.

a. Transfer Function: The nominal transfer function for the pitch attitude feedback loop (pitch attitude to series servoactuator displacement) shall be the form shown below.

$$\frac{\text{Servoactuator Displacement}}{\text{Pitch Attitude}} = 0.038 \left(\frac{1}{0.5S+1}\right) \left(\frac{0.04S+1}{0.1S+1}\right) \left[\frac{1200}{(0.03S+1)(S^2+22S+1200)}\right] \frac{\text{in.}}{\text{deg}}$$

b. Range: The range shall be at least 100 percent actuator stroke (10 degrees equivalent pitch attitude) through the pitch attitude loop.

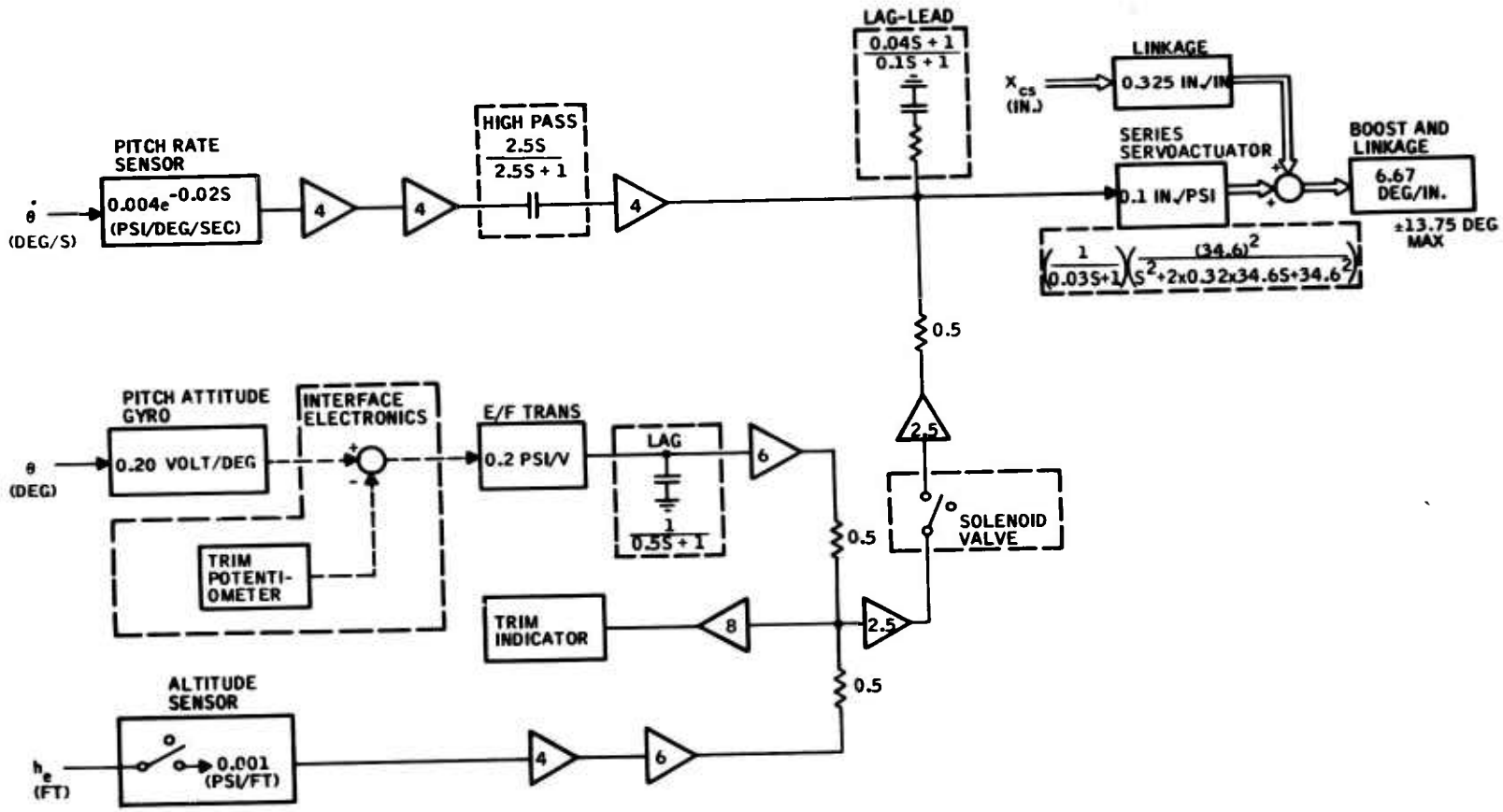

Figure 28. Pitch-Axis Schematic.

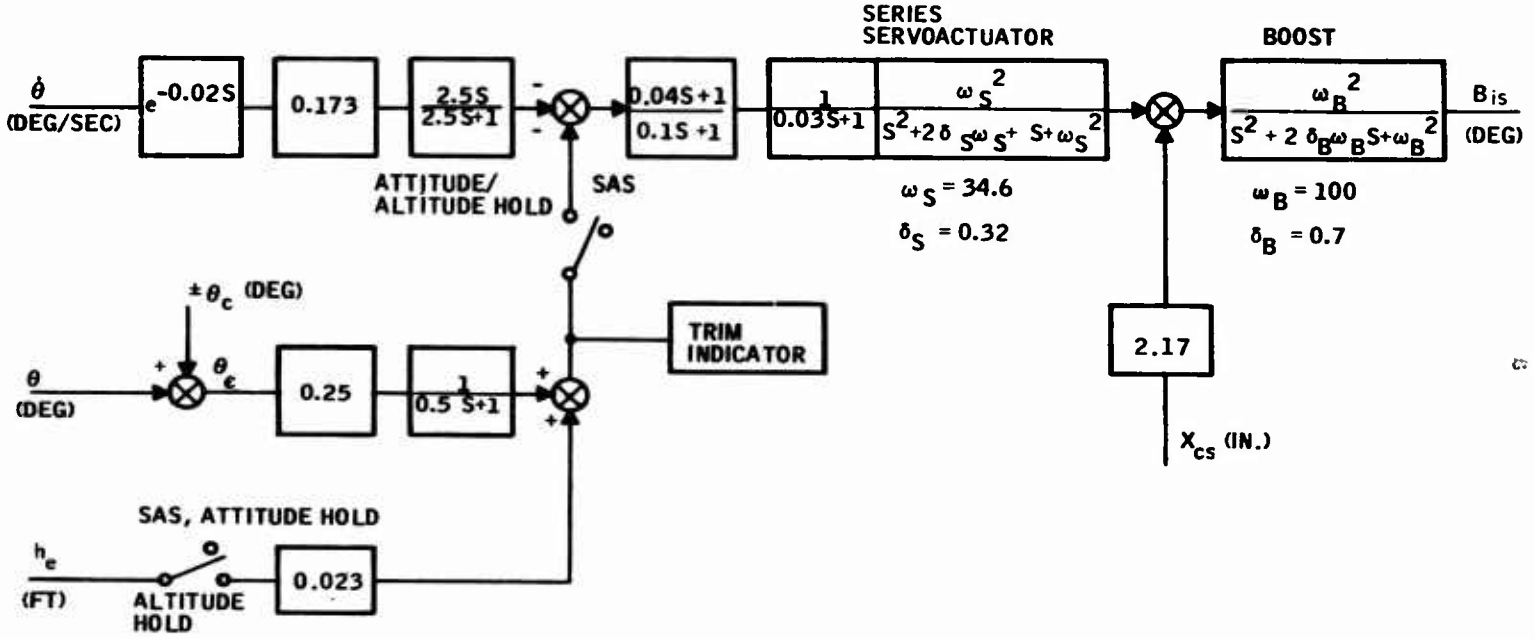

Figure 29. Pitch-Axis Requirements.

c. Noise: Peak-to-peak noise at the actuator shall not exceed an equivalent of ±0.5 degree pitch attitude.

d. Accuracy: Gain and time constants shall be maintained within ±20 percent of the nominal requirements.

3.5.2.3 Altitude Hold -- Altitude hold requirements are summarized in the block diagram of Figure 29. The hardware schematic is shown in Figure 28. Additional performance requirements are listed below.

a. Transfer Function: The nominal transfer function for the altitude loop (altitude error to series servoactuator displacement) shall be in the form shown below.

$$\frac{\text{Servoactuator Displacement}}{\text{Altitude Error}} = 0.0035 \left(\frac{0.04S+1}{0.1S+1}\right) \left[\frac{1200}{(0.03S+1)(S^2+22S+1200)}\right] \frac{\text{in.}}{\text{ft}}$$

b. Range: The range shall be at least 100 percent actuator stroke (100 feet equivalent altitude error) through the altitude error loop.

c. Noise: Peak-to-peak noise at the actuator shall not exceed an equivalent of ±10 feet altitude error.

d. Accuracy: Gain and time constants shall be maintained within ±20 percent of the nominal requirements.

3.5.3 System Interconnection

The system hydraulic interconnection is defined in Figure 30. The system electrical circuit interconnection is defined in Figure 31.

3.6 Component Performance

Performance as specified in this section shall be determined at room temperature ambient, with hydraulic fluid at 120° ±10°F, unless otherwise specified.

3.6.1 Attitude Sensors

The system attitude sensors shall be either the existing or suitable substitutes for the electrical display gyros presently used for vertical attitude reference and aircraft heading reference information on the UH-1C helicopter. These attitude sensors shall meet the following requirements:

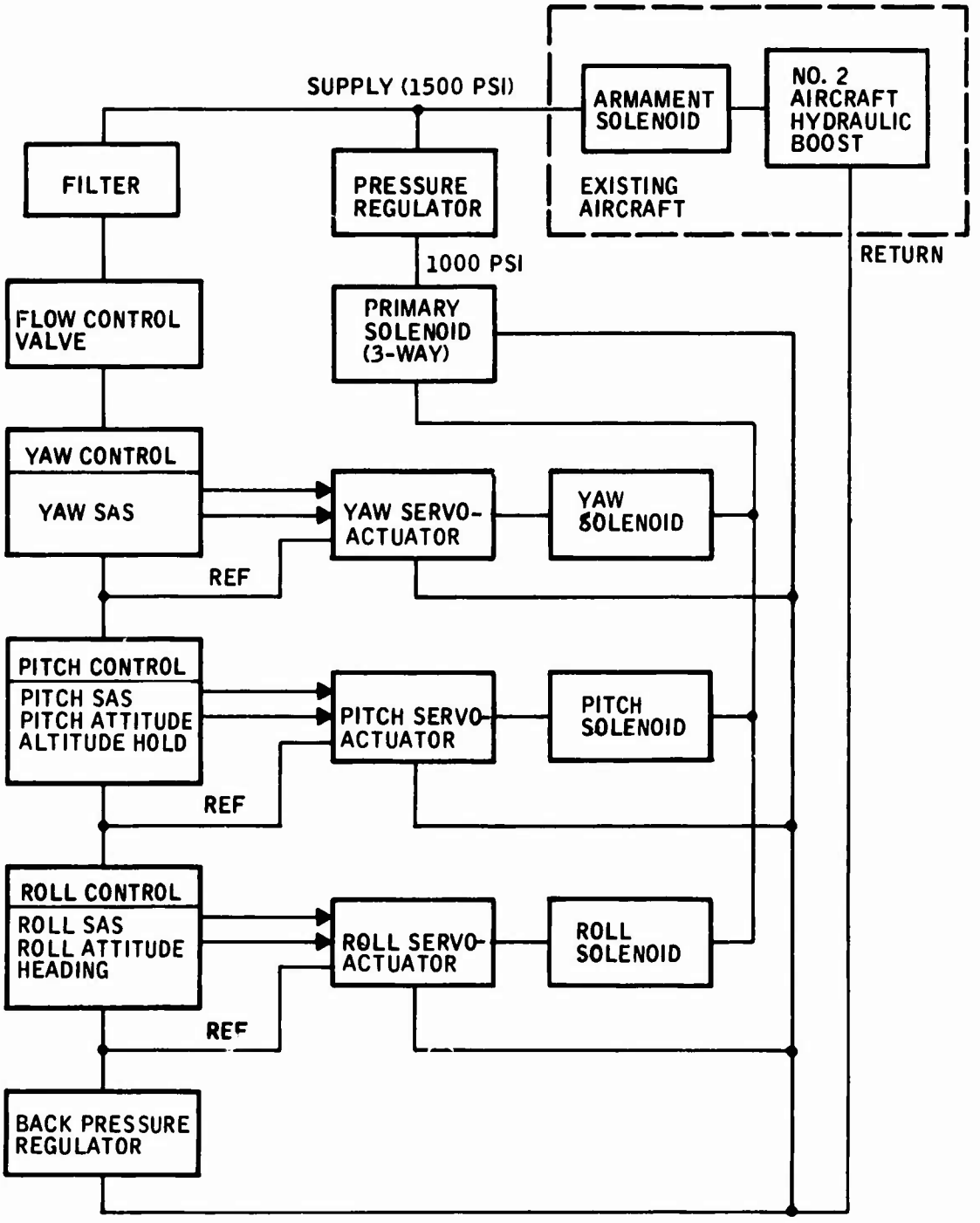

Figure 30. System Hydraulic Interconnection Diagram.

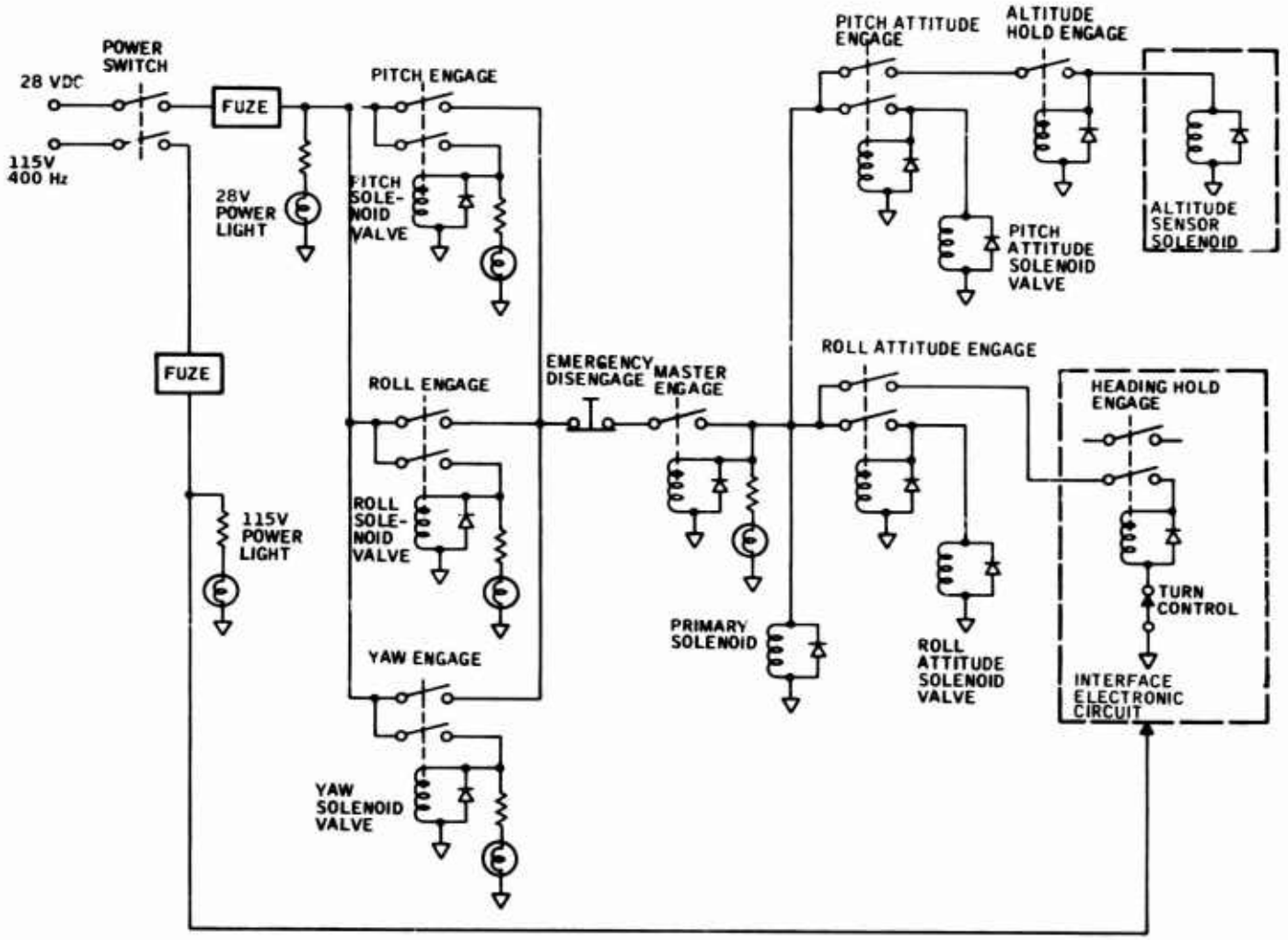

Figure 31. System Electrical Interconnection Diagram.

a. Scale Factor: Roll, pitch, and heading attitude signals shall have a scale factor of at least 0.1 volt/deg at the output of the interface electronic circuit.

b. Range: ±30 degrees minimum in roll and pitch; 360 degrees in heading.

c. Linearity: 10 percent over a range of ±10 degrees.

d. Accuracy: ±1.0 degree.

3.6.2 Vortex Rate Sensors

a. Scale Factor: 0.004 psid/(deg/sec), when loaded with an amplifier.

b. Range: ±40 deg/sec minimum.

c. Linearity: 5 percent of full scale.

d. Time Delay: 0.020 second or less.

e. Noise: ±0.5 deg/sec maximum.

3.6.3 Altitude Error Sensor

a. Scale Factor: 0.001 psid/ft, when loaded with an amplifier.

b. Range: ±500-foot error minimum from altitude at time of engagement.

c. Threshold: 10 feet at 2000 feet reference altitude.

d. Drift: 20 feet maximum per hour at a reference altitude of 2000 feet.

3.6.4 Rudder Input Device

a. Scale Factor: 0.14 psid/in. pedal when loaded with an amplifier.

b. Range: ±3.25 inches pedal.

c. Linearity: 10 percent of range.

d. Threshold: ±0.05 inch pedal.

3.6.5 Interface Electronic Circuit

A schematic of the electronic circuit used to provide an interface between the aircraft display gyros and the fluidic system electric-to-fluidic transducers is shown in Figure 32. This circuit provides demodulation of the gyro output signals, summing of the pitch and roll trim signals and the turn control signal, and impedance matching with the electric-to-fluidic transducers. An electrical power supply is also included for the circuit.

a. Gain: Sufficient gain to obtain approximately 0.1 volt/deg at the output of the interface electronic circuit.

b. Range: ±30 degrees equivalent.

c. Trim Range: ±12 degrees equivalent in pitch; ±5 degrees equivalent in roll.

d. Turn Control: The turn control knob shall allow the pilot to establish bank angles up to 25 degrees as a function of displacement from a center detent position. The knob shall also operate a switch which disengages the heading hold mode when the turn knob is out of detent.

3.6.6 Electric-to-Fluidic Transducer

a. Scale Factor: 0.2 psid/volt when loaded with an amplifier.

b. Range: ±1.0 psid minimum.

c. Linearity: 10 percent of range.

d. Threshold: 0.01 psid.

3.6.7 Amplifiers

a. Gain and Loading: Requirements for each application are described in Figures 24, 25, and 28.

b. Range: The range of an individual amplifier shall be at least 1.5 times the minimum range requirements for the control channel it is in.

c. Linearity: 5 percent of range.

d. Noise: ±0.01 psid maximum.

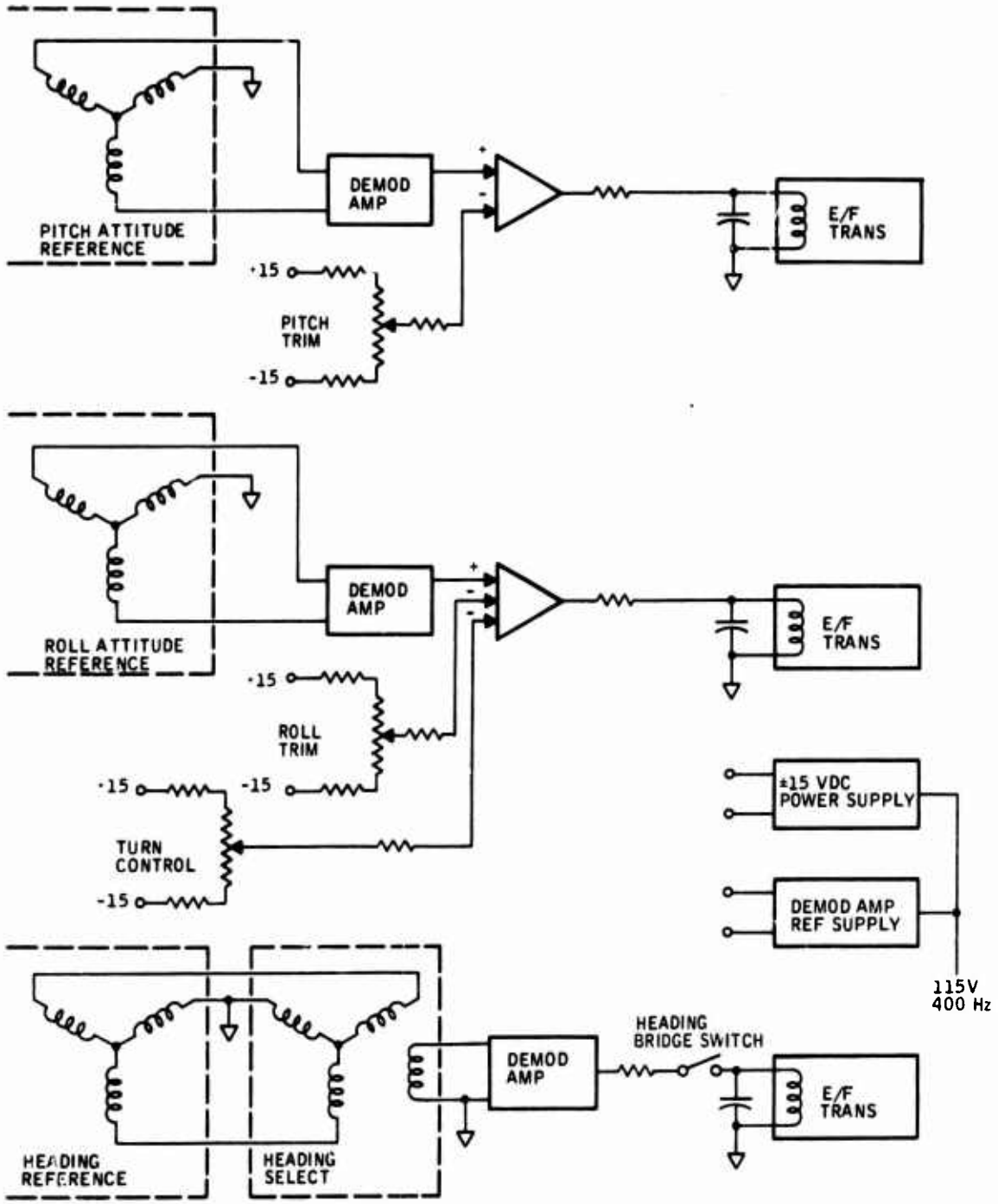

Figure 32. Interface Electronic Circuit Schematic.

3.6.8 Servoactuator

The servoactuator for the system shall be the same units used for the flight test of a three-axis hydrofluidic stability augmentation system on Contract DAAJ02-70-C-0017. The performance requirements for these units are listed below.

a. Scale Factor: 0.09 in./psid.

b. Stroke: ±0.38 inch.

c. Supply Pressure: 1000 psi.

d. Output Force: 160 pounds (maximum).

e. Centering Force: 50 pounds.

f. Threshold: 1.0 percent (maximum).

g. Rated Velocity: 10 in./sec, no load.

h. Dynamic Response: 90 degrees phase lag at 5 Hz (minimum) at 25 percent rated input.

i. Hysteresis: 2 percent of full stroke.

j. Effective Input Capacitance: 5×10^{-4} in.^{3}/psi.

3.6.9 Trim Indicator

a. Range: ±5 psid minimum.

b. Resolution: 1 psid maximum.

3.6.10 Flight Controller

The flight controller shall provide the controls necessary for system engagement, selection of mode of operation, and introduction of pilot trim and turn commands. The functions of the controller switches and knobs are shown in Figure 31 and are further defined below.

a. Power Switch: Controls 28-volt d-c power to the flight controller and 115-volt, 400 Hz power to the interface electronic circuit.

b. Master Engage Switch: Activates the system primary solenoid valve and provides 28-volt d-c power to the

outer-loop mode switches. For the switch to remain engaged, at least one of three axis engage switches (pitch, roll, or yaw) must be engaged.

c. Emergency Disengage Switches: Deactivates the primary solenoid valve by opening the master engage switch. An emergency disengage switch shall be located on the pilot's control stick, on the copilot's control stick, and on the flight control panel.

d. Axis Engage Switches: Activates the individual axis solenoid valve, thereby engaging the series servoactuator and therefore the SAS mode in that axis. Separate switches shall be provided for the pitch, roll, and yaw axes.

e. Attitude Hold Switches: Activates the solenoid valve in the fluidic attitude loop, thereby engaging the attitude hold mode. Separate switches shall be provided for pitch attitude and roll attitude. These switches shall be the latching type which disengage the mode when the master engage switch is opened.

f. Heading Hold Switch: Activates the electrical heading bridge switch in the interface electronic circuit, thereby engaging the heading hold mode. For the switch to remain engaged, the roll attitude hold switch must be closed and the turn control knob must be in its center detent position.

g. Altitude Hold Switch: Activates the solenoid valve in the altitude error sensor, thereby engaging the altitude hold mode. For the switch to remain engaged, the pitch attitude hold switch must be closed.

h. Turn Command Knob: Allows the pilot to establish bank angles up to 15 degrees as a function of displacement from a center detent position. The knob also operates a switch which disengages the heading hold mode when the knob is out of the detent position.

i. Trim Knobs and Indicators: Trim knobs and indicators shall be provided in the roll and pitch attitude loops to provide the pilot with a trim indication and manual trim capability prior to and after engagement of the outer loop modes.

j. Indicator Lights: Provides an indication of the status of the following switches:

- Power switch
- Master engage switch
- Axis engage switches (each axis)

3.7 Performance Under Environmental Conditions

The system shall be compensated to minimize changes in performance with changes in environment over the range of conditions specified in 3.2. The following tolerance values shall be maintained:

a. System gains: ±20 percent.

b. System time constants: ±20 percent.

3.8 Product Configuration

Figures 30 and 31 define the overall interconnection of the system. Servoactuator design and installation shall be the same as utilized in the flight test of a three-axis fluidic stability augmentation system under Contract DAAJ02-70-C-0017.

4.0 QUALITY ASSURANCE

Conformance of the hardware to the program objective shall be evaluated with the following tests. Vibration tests should be completed before performance tests are conducted.

4.1 Vibration

A vibration scan with the system energized and operating shall be conducted at the amplitudes and frequencies of Figure 514-1, Curve B, of MIL-STD-810B. A sinusoidal vibration cycling, per the test envelope, shall be conducted at a rate sufficiently slow to allow adequate identification and evaluation of the resonant frequencies or functional phenomena that may occur. Sinusoidal vibration cycle times shall be not less than 15 minutes per each of the three axes. System vibration testing shall be conducted with the hydraulic supply and connections simulating the actual aircraft installation as nearly as practicable.

4.2 Open-Loop Tests

4.2.1 Yaw Axis SAS

Yaw SAS gain and response shall be determined by measuring channel output versus frequency at two input amplitudes. Response

shall be measured with fluid temperatures of 40°F, 120°F, and 185°F. Results are to be compared with the requirements of Paragraphs 3.5.1.1 and 3.7.

4.2.2 Roll Axis SAS

Roll SAS gain and response shall be determined by measuring channel output versus frequency at two input amplitudes. Response shall be measured with fluid temperatures of 40°F, 120°F, and 185°F. Results are to be compared with the requirements of Paragraphs 3.5.1.2 and 3.7.

4.2.3 Roll Attitude Hold

Roll attitude hold gain shall be determined by measuring channel output versus gyro roll angular displacement from vertical. Response shall be determined by measuring output versus frequency for simulated (electrical) input angular displacement signals. Gain and response shall be measured with fluid temperatures of 40°F, 120°F, and 185°F. Results are to be compared with the requirements of Paragraphs 3.5.1.3 and 3.7.

4.2.4 Heading Hold

Heading hold gain shall be determined by measuring channel output versus heading error. Response shall be determined by measuring output versus frequency for simulated (electrical) heading error signals. Gain and response shall be measured with fluid temperatures of 40°F, 120°F, and 185°F. Results are to be compared with the requirements of Paragraphs 3.5.1.4 and 3.7.

4.2.5 Pitch Axis SAS

Pitch SAS gain and response shall be determined by measuring channel output versus frequency at two input amplitudes. Response shall be measured with fluid temperatures of 40°F, 120°F and 185°F. Results are to be compared with the requirements of Paragraphs 3.5.2.1 and 3.7.

4.2.6 Pitch Attitude Hold

Pitch attitude hold gain shall be determined by measuring channel output versus gyro pitch angular displacement from vertical. Response shall be determined by measuring output versus frequency for simulated (electrical) input angular displacement signals. Gain and response shall be measured with fluid temperatures of 40°F, 120°F, and 185°F. Results are to be compared with the requirements of Paragraphs 3.5.2.2 and 3.7.

4.2.7 Altitude Hold

Altitude hold gain shall be determined by measuring channel output versus pneumatic pressure differential to the altitude sensor. Response shall be determined by measuring output versus frequency for simulated (fluidic) altitude error signals. Gain and response shall be measured with fluid temperatures of 40°F, 120°F, and 185°F. Results are to be compared with the requirements of Paragraphs 3.5.2.3 and 3.7.

4.3 Verification

1. Inspect system for quality of workmanship and conformance to installation drawings.

2. Determine that system contains all features described in Paragraph 3.8.

3. Establish that power required does not exceed amount specified in Paragraph 3.3.

SECTION VI
CONCLUSIONS

As a result of the system design and analysis tasks, the following conclusions were reached:

- A relatively simple hydrofluidic flight control system can be mechanized which will provide significant relief for the pilot in terms of relieving pilot fatigue, relieving the pilot of routine tasks, and assisting the pilot in the precise control of the aircraft.

- The defined hydrofluidic flight control system will control the transient response of the UH-1C helicopter in a manner that generally satisfies the requirements of the system design goals.

- The tradeoff between providing increased pilot relief and keeping the automatic flight control simple and low cost resulted in:

  1. Limiting the attitude hold, heading hold, and altitude hold modes to airspeeds above 50 knots and limiting maneuvering capability when in these modes. However, these modes will still be operational for over 90 percent of normal mission flight time.

  2. The use of control panel switching for system engage/disengage and mode selection.

  3. The use of the existing display gyros to obtain attitude and heading reference signals. This is consistent with general practice of not duplicating these functions on the aircraft.

  4. The use of series servoactuators for both SAS and outer loop modes. This permits ease of installation and does not seriously limit pilot maneuvering capability for the type aircraft and missions considered.

- The components of the system defined are within the present state of the art, and the mechanical and hydraulic installation in the helicopter is essentially the same as that demonstrated during the earlier flight test of a three-axis stability augmentation system.

SECTION VII
RECOMMENDATION

It is recommended that the defined advanced hydrofluidic stabilization system be built and flight tested to demonstrate the predicted performance and to obtain pilots' evaluation of system utility and performance.

LITERATURE CITED

1. Graham, G. L., COMBAT OPERATIONAL FLIGHT PROFILES ON UH-1C, AH-1G, AND UH-1H HELICOPTERS, 26th Annual National Forum of the American Helicopter Society, Bell Helicopter Company, June 1970.

2. Ogren, Harvey, A THREE-AXIS FLUIDIC STABILITY AUGMENTATION SYSTEM, Honeywell Inc.; U.S. Army Air Mobility Research and Development Laboratory Technical Report 71-30, U.S. Army Air Mobility Research and Development Laboratory, Fort Eustis, Virginia, October 1971, AD 739559.

3. Ebsen, Mark E.; Ogren, Harvey; and Sotanski, Donald, THREE-AXIS FLUIDIC STABILITY AUGMENTATION SYSTEM FLIGHT TEST REPORT, Honeywell Inc.; U.S. Army Air Mobility Research and Development Laboratory Technical Report 71-34, U.S. Army Air Mobility Research and Development Laboratory, Fort Eustis, Virginia, September 1971, AD 734343.

4. Sonneborn, W., and Torres, I., UH-1C DATA FOR HYBRID COMPUTER SIMULATION, Bell Helicopter Report No. 204-099-892, Bell Helicopter Company, 1 April 1968.

5. Hoffman, John A., A DESCRIPTION OF THE MOSTAB COMPUTER PROGRAM OUTPUT DATA FORMAT, Mechanics Research, Inc., Mechanics Research, Inc. Report 2414-1, July 1970.

6. Hoffman, John A., and Wolkovitch, Julian, EQUATIONS BY HELICOPTER SIMULATION, Mechanics Research, Inc., Mechanics Research, Inc. Report R2383-1, 23 December 1969

7. Hoffman, John A., STABILITY DERIVATIVES AND OTHER DATA REQUIRED FOR SIMULATION OF THE BELL UH-1C HELICOPTER, Mechanics Research, Inc., Mechanics Research, Inc. Report 2383-2, 4 February 1970.

APPENDIX I
SYSTEM MODE REQUIREMENTS BASED ON MISSION PROFILES

Included in this appendix is a summary of automatic flight control system (AFCS) mode requirements dictated by mission task analysis and free-vehicle handling qualities. Three types of mission tasks are included:

- Light observation aircraft system (LOAS)
- Advanced aerial fire support system (AAFSS)
- Utility tactical transport aircraft system (UTTAS)

The mode requirements/mission task analyses were obtained from the Army Advanced AFCS Study, Final Report, 20221-FR4, May 1967, performed by Honeywell Inc. for the United States Army Electronics Command under Contract DA-28-043AMC-01216(E). Table XIII presents a summary of AFCS mode requirements for three aircraft missions. Table XIV summarizes the AFCS control modes dictated by mission tasks for the UH-1 helicopter performing the utility tactical transport mission.

Based on the combination of missions presently performed by the UH-1-type helicopter and the control mode requirements indicated for these missions, the control modes for the advanced hydrofluidic stabilization system were selected.

TABLE XIII. SUMMARY OF AFCS MODE REQUIREMENTS FOR THREE MODELS

Mode Requirement	Army Aircraft Systems and Model Vehicles		
	LOAS OH-5	AAFSS AH-56A	UTTAS UH-1
Stability Augmentation System			
Pitch and Roll	X	-	X
Yaw	X	X	X
Vertical	-	-	-
Pitch and Roll Attitude Hold	X	X	X
Heading Hold			
Roll	X	X	X
Yaw	-	X	-
Altitude Hold			
Pitch	-	X	X
Vertical	-	Δ	Δ
Control Stick Steering	X	X	X
Automatic Navigation			
VOR	Δ	X	X
Ground Track Hold	-	-	-
Ground Track Angle Hold	-	-	-
Check Point Navigation	-	-	-
Automatic Approach			
Localizer	Δ	X	X
Glideslope	Δ	X	X
Automatic Landing			
STOL Aircraft	-	-	-
VTOL Aircraft	-	-	-
Automatic Terrain Following	-	-	-
Automatic Stationkeeping	-	-	-
Automatic Target Homing	-	X	-

Note: X Denotes number of AFCS channels required to satisfy mission or handling quality requirements.

Δ May be required.

TABLE XIV. AFCS CONTROL MODES DICTATED BY MISSION TASKS AND FREE-VEHICLE HANDLING QUALITIES -- UTTAS/UH-1D

AFCS Control Mode	Applicable to Following Tasks	Frequency of Use (%)	Relative Importance of This AFCS Control Mode
Longitudinal Stabilization	- Air assault transport - General transport - Cargo transport	100	"Definitely required" for air assault troop landing. "Required" otherwise
Lateral Stabilization	All	100	"Definitely required" for air assault troop landing. "Required" otherwise
Directional Stabilization	All	100	"Required" for good directional handling qualities
Pitch Attitude Hold	All	70	"Required" for short-term flight path control during climbs, descents and level flight
Roll Attitude Hold	All	20	"Required" for low speeds and turns
Heading Hold	All	60	"Required" for dead-reckoning navigation
Control Stick Steering (CSS)	All	10	"Required" to provide the pilot with a convenient means of changing flight path
Altitude Hold (Longitudinal Axis)	All	20	"Required" for long-term longitudinal flight path control and IFR terrain clearance
Automatic Omni, ADF Type Navigation	All	10	"Required" for IFR navigation
Automatic Approach	All	5	"Required" for IFR approach where minimums exceed 100 feet
Altitude Hold (Vertical Axis)	- Air assault transport	5	"Optional" for station-keeping during formation flight
Automatic Landing	All	2	"Optional" for all-weather transportation capability
Automatic Station-keeping	- Air assault transport	5	"Required" for night, marginal weather capability

APPENDIX II
MATHEMATICAL MODEL -- UH-1C ANALOG REPRESENTATION

Six-degree-of-freedom perturbation equations of motion were used during the analysis to mathematically represent the UH-1C helicopter. These equations and aerodynamic data were received from Mechanics Research Inc. and are detailed in References 5, 6, and 7. Primary control interface data was taken from Reference 4. An analog computer simulation of the UH-1C helicopter, without the mechanical stabilizer bar, is presented in Figures 33 through 38 and Table XV. The aerodynamic data presented are for sea level altitude and 0, 20, 40, 60, 80 and 100 knots airspeed.

Tail boom bending, vibration modes, small-amplitude linkage nonlinearities, etc., were not analyzed. Insufficient data exists to perform a detailed analysis of these higher-order characteristics. However, during this analysis, gains and time constants of the system were defined to minimize the possibility of exciting these undesired modes.

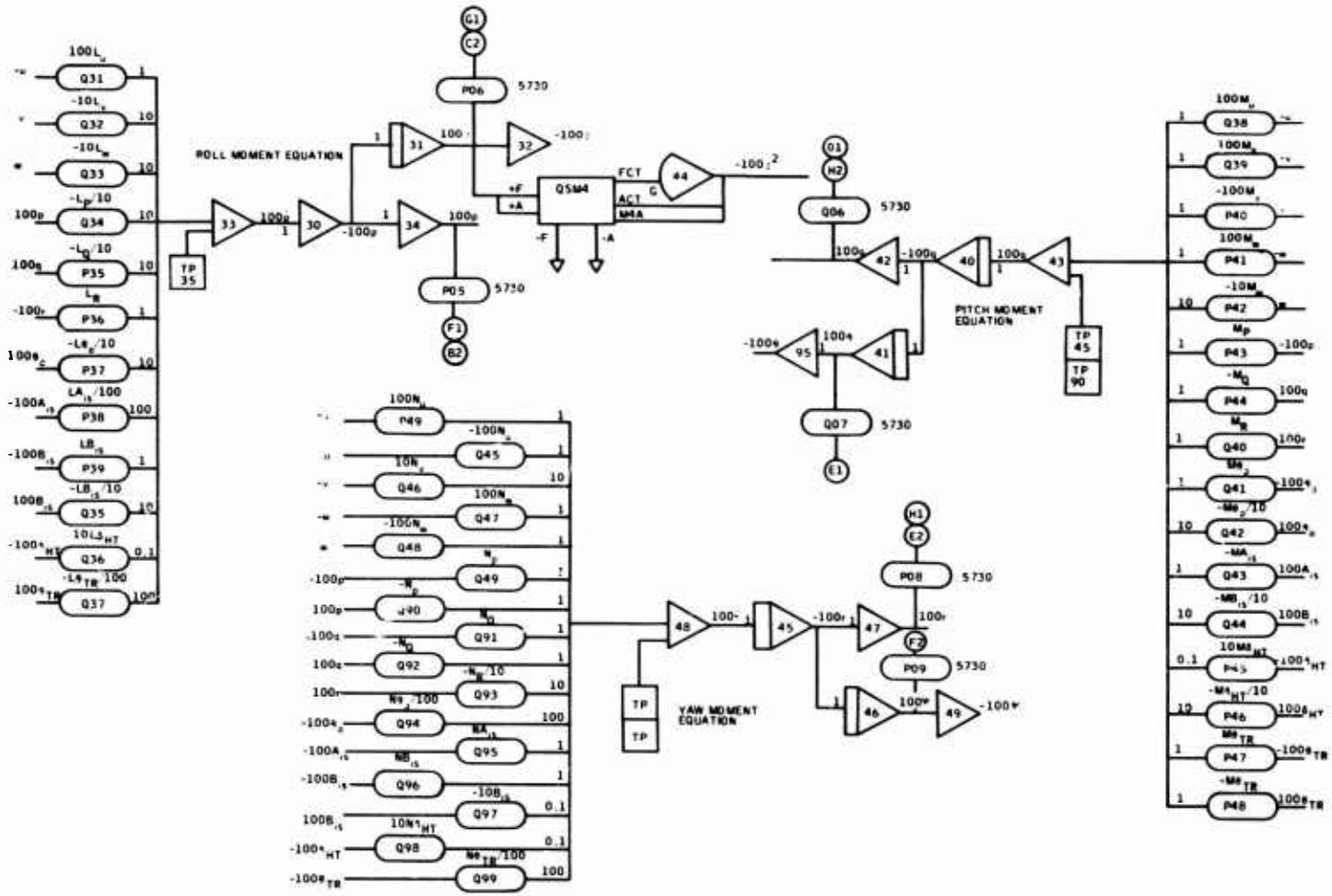

Figure 33. UH-1C Moment Equations Simulation.

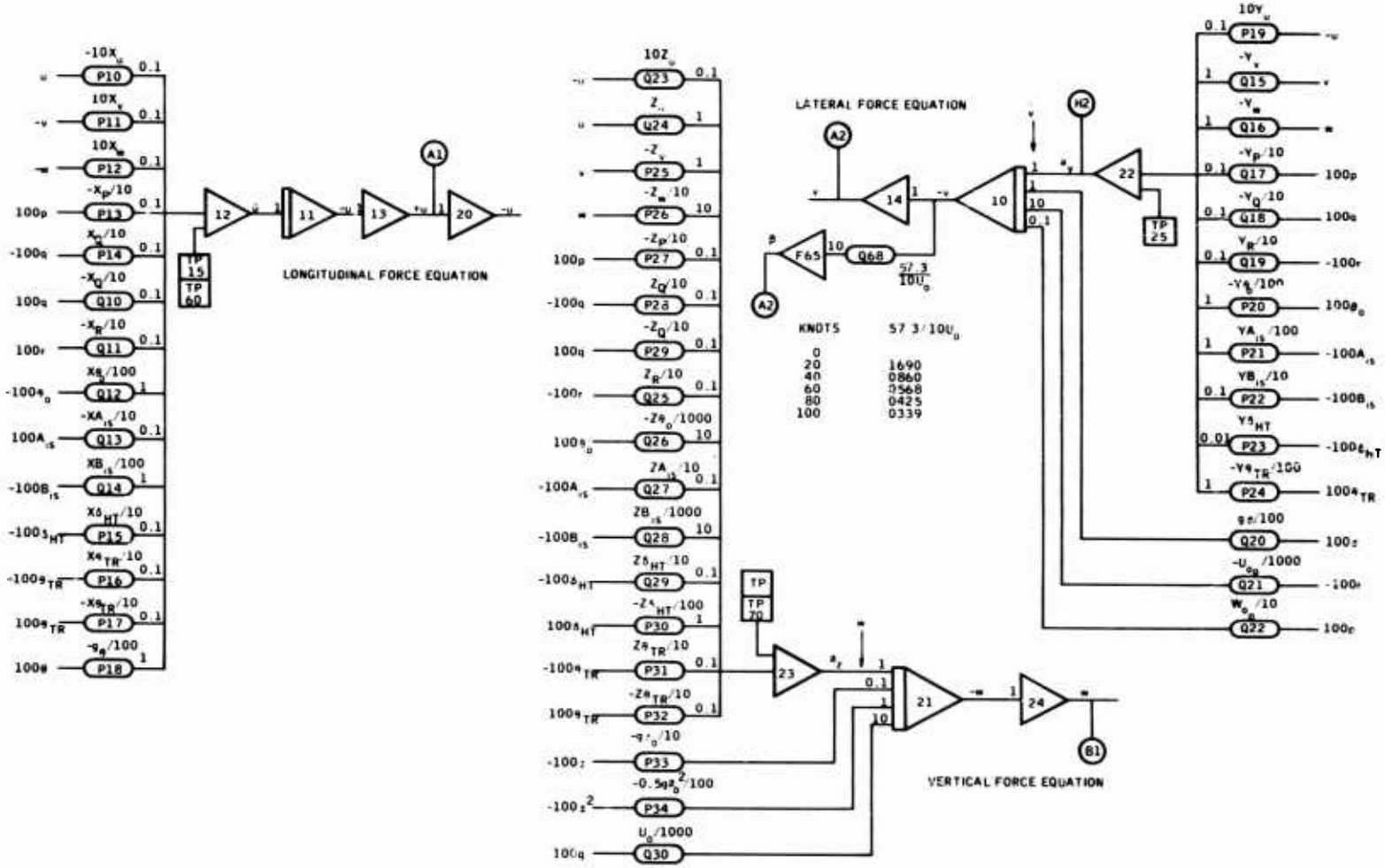

Figure 34. UH-1C Force Equations Simulation.

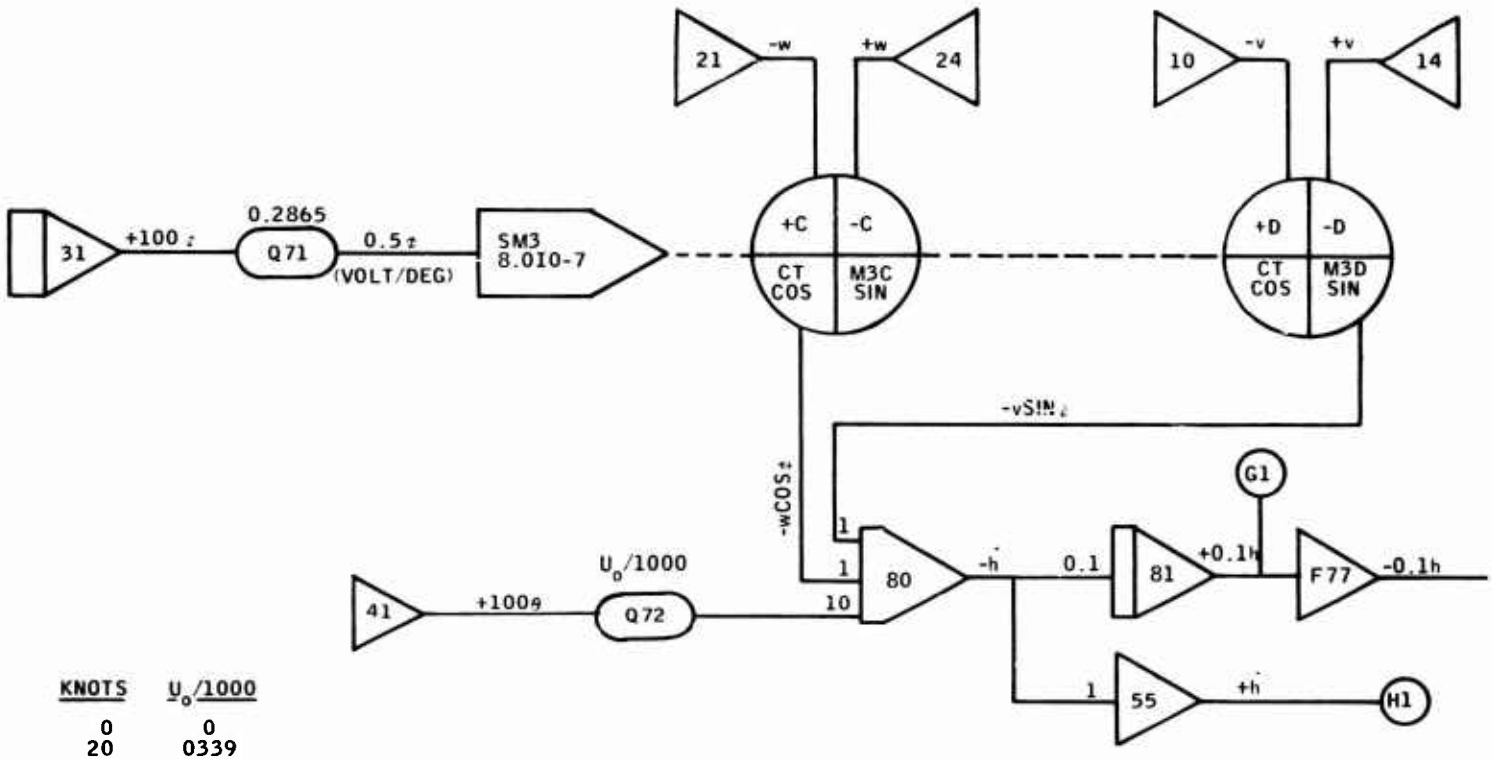

KNOTS	$U_o/1000$
0	0
20	0339
40	0675
60	1017
80	1350
100	1690

$\dot{h} = -v\mathrm{SIN}\phi - w\mathrm{COS}\phi + U_o\theta$

Figure 35. Altitude Generator Simulation.

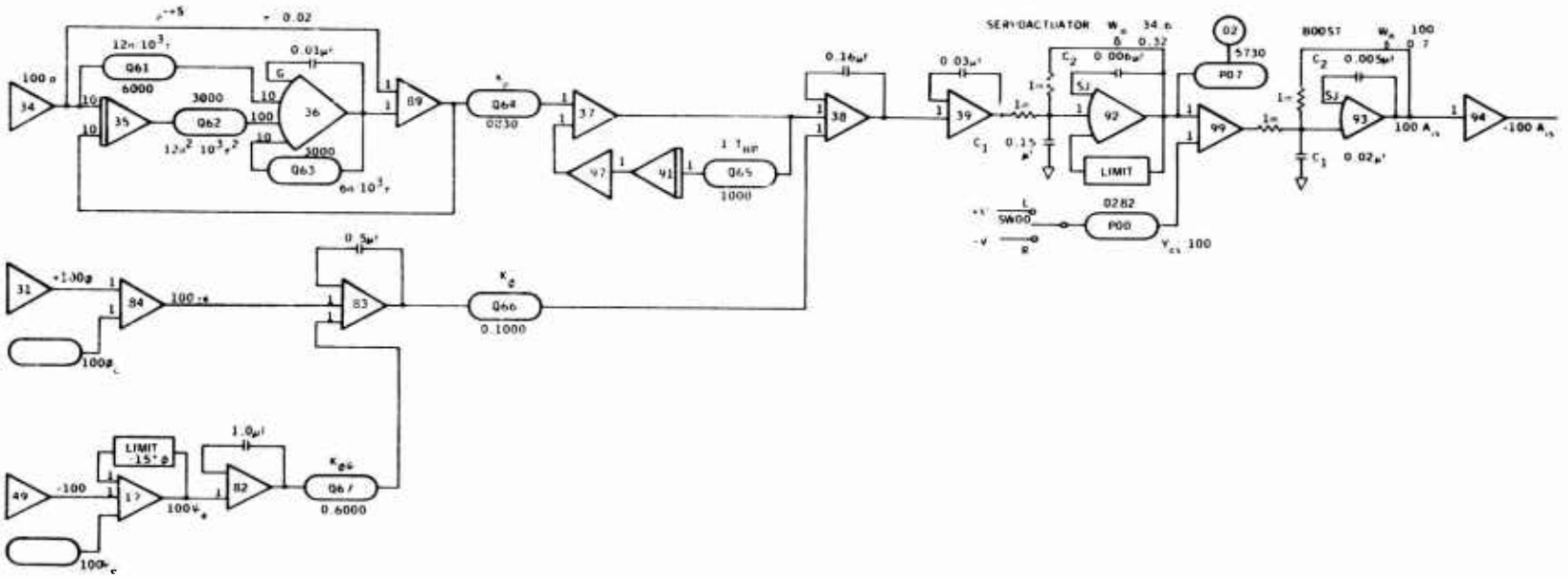

Figure 36. Roll-Axis Controller Simulation.

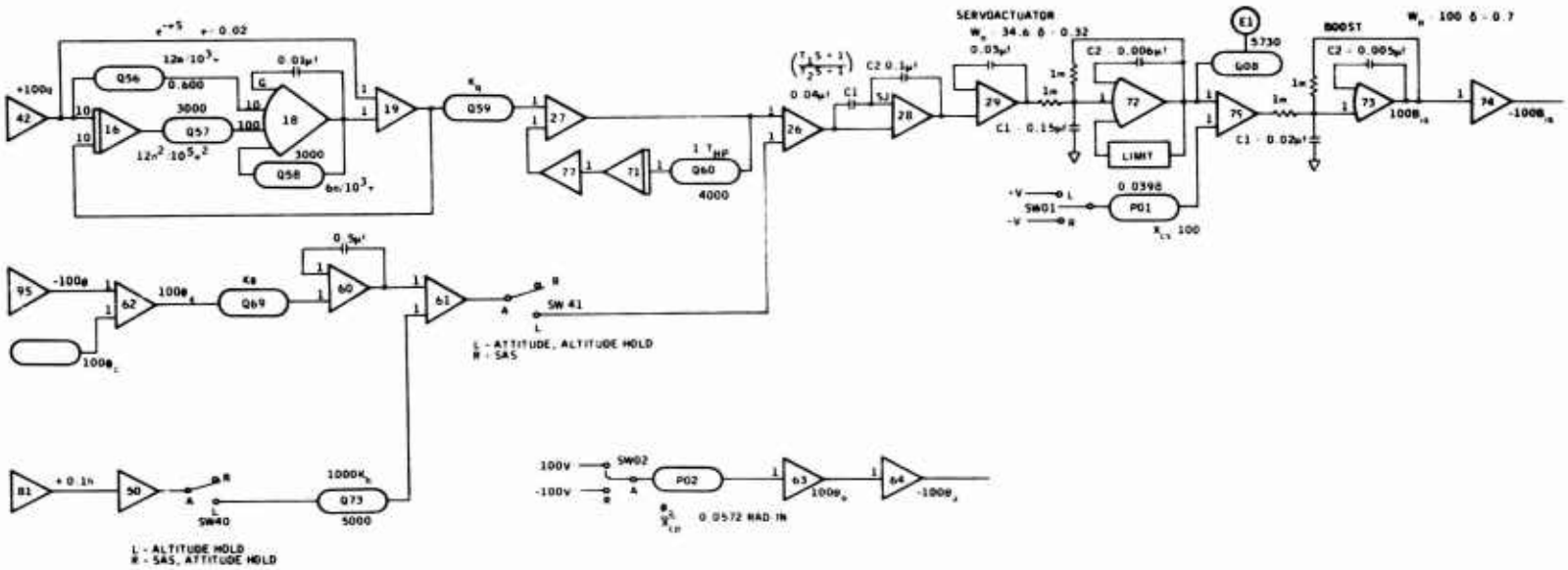

Figure 37. Pitch-Axis Controller Simulation.

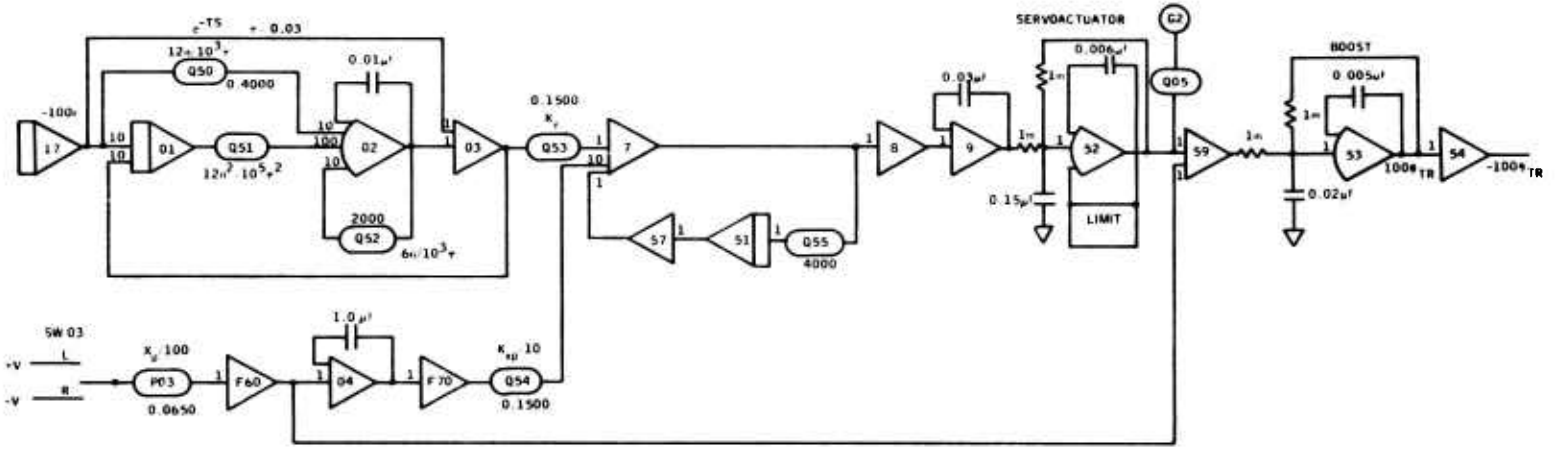

Figure 38. Yaw-Axis Controller Simulation.

TABLE XV. ANALOG COMPUTER POTENTIOMETER SETTINGS

NAME ERSEN DATE 7/13/71 PROBLEM GLH-1C SHEET 1 OF 9 BOARD NO. 41

POT. NO.	PARAMETER DESCRIPTION	COND. 0		COND. 20		COND. 40		COND. 60		COND. 80		COND. 100	
		GN	SET	GN	SET	GN	SET	GN	SET	GN	SET	GN	SET
P10	$-10X_u$	.1	0904		1546		1374		3377		4424		5607
P11	$10X_v$	.1	0047		0132		0069		0433		0449		0513
P12	$10X_w$	.1	1135		1578		3234		4397		5812		7455
P13	$-X_p/10$	.1	1414		1383		1323		1237		1167		1072
P14	$X_Q/10$	.1	1514		0903		0012		0		0		1431
Q10	$-X_Q/10$	.1	0		0		0		1185		0645		0
Q11	$-X_R/10$	.1	0178		0180		0172		0306		0354		0427
Q12	$X_{\theta_0}/100$	1	1177		0859		1015		2038		2521		3230
Q13	$-X_{AIS}/10$	.1	0525		0625		0754		0791		0768		0716
Q14	$X_{BIS}/100$	1	3295		3177		2996		2577		2151		1568
P15	$X_{SHT}/10$	.1	0519		0216		1146		0031		0153		0201
P16	$X_{\theta TR}/10$	.1	0020		0		0928		0		0253		0536
P17	$-X_{\theta TR}/10$	.1	0		0021		0		0124		0		0
P18	$-q_0/100$	1	3222		3222		3222		3222		3222		3222
P19	$10Y_u$	.1	0059		0614		0402		0611		0714		0900
Q15	$-Y_v$	1	0372		0587		0865		1204		1483		1768
Q16	$-Y_w$	1	0107		0130		0115		0149		0178		0225
Q17	$-Y_p/10$	.1	1639		2100		2715		2925		2850		2555
Q18	$-Y_Q/10$	.1	1532		1492		1381		1425		1417		1417
Q19	$Y_R/10$	.1	0613		.0768		1097		1550		1891		2235
P20	$-Y_{\theta_0}/100$	1	1113		0824		0606		0550		0606		0770
P21	$Y_{AIS}/100$	1	3316		3302		3306		3313		3323		3361
P22	$Y_{BIS}/10$	.1	0244		0718		1224		1744		2491		3691
P23	Y_{SHT}	.01	0		0014		0003		0620		1000		1267
P24	$-Y_{\theta TR}/100$	1	2106		1871		2030		2114		2298		2414
Q20	$+q_0/100$	1	3219		3219		3219		3219		3219		3219
Q21	$-\alpha_0/1000$	10	0		0339		0675		1017		1350		1690
Q22	$W_h/10$	.1	0		0986		2460		3582		2909		0433

TABLE XV - Continued

NAME EASEN DATE 7/13/71 PROBLEM LM-1C SHEET 2 OF 9 BOARD NO. 41

POT. NO.	PARAMETER DESCRIPTION	COND. 0		COND. 20		COND. 40		COND. 60		COND. 80		COND. 100	
		GN	SET	GN	SET	GN	SET	GN	SET	GN	SET	GN	SET
Q23	10ZU	.1	0885		0		0		0		3251		6470
Q24	- ZU	1	0		2287		0948		0134		0		0
P25	- ZV	1	0117		0144		0131		0159		0174		0214
P26	- ZW/10	10	0372		0565		0782		0923		0999		1055
P27	- ZP/10	.1	0254		0360		1020		1621		2208		2819
P28	ZQ/10	.1	0		1141		0664		0		0		0
P29	-ZQ/10	.1	0108		0		0		0727		1350		1950
Q25	ZR/10	.1	2041		1776		1692		1799		1906		2086
Q26	-ZΘ₀/1000	10	3554		3381		3795		4180		4522		4823
Q27	ZAIS/10	.1	0300		0218		0091		0079		0161		0383
Q28	ZBIS/1000	10	0018		0200		0527		0875		1227		1585
Q29	ZSNT/10	.1	0009		0		0		0		0		0
P30	-ZSNT/100	1	0		0013		0		0446		0784		1234
P31	ZOTR/10	.1	0171		0429		0		0965		0819		0929
P32	-ZOTR/10	.1	0		0		0427		0		0		0
P33	-gΦ₀/10	.1	0641		0531		0458		0540		0718		1016
P34	-.5gφ₀/100	1	1610		1610		1610		1610		1610		1610
Q30	V_g/1000	10	0		0339		0675		1017		1350		1690
Q31	100LU	1	1061		1825		1723		1918		2098		2794
Q32	- 10LV	10	1682		1838		2269		2792		3178		3573
Q33	- 10LW	10	0674		0803		0683		0648		0747		1016
Q34	- LP/10	10	0867		1123		1427		1522		1449		1249
P35	- LQ/10	10	1070		1010		0913		0882		0876		0891
P36	LR	1	2490		3070		4389		5953		7269		8634
P37	- LΘ₀/10	10	8613		6388		4671		4142		4410		5573
P38	LAIS/100	100	1871		1853		1842		1843		1850		1876
P39	LBIS		0		0		0		0		0		3609
Q35	- LBIS/10	10	1493		0932		0416		0205		0012		0
Q36	10LSNT	.1	0		0080		0016		3414		5461		6807
Q37	- LOTR/100	100	0871		0780		0828		0908		0989		1042

TABLE XV - Continued

NAME EBSEN DATE 7/13/71 PROBLEM UH-1C SHEET 3 OF 9 BOARD NO. 41

POT. NO.	PARAMETER DESCRIPTION	COND. 0		COND. 20		COND. 40		COND. 60		COND. 80		COND. 100	
		GN	SET	GN	SET	GN	SET	GN	SET	GN	SET	GN	SET
Q38	100MU	1	1087		2597		6067		3894		4655		5513
Q39	100MV	1	0130		0		0713		0		0		0
P40	-100MV	1	0		0123		0		1200		0882		0657
P41	100MW	1	0		01284		3294		0		0		0
P42	-10MW	10	0093		0		0		0855		1279		1801
P43	MP	1	3142		2937		2528		2506		2533		2629
P44	-MQ	1	3257		3594		3842		7297		8017		8959
Q40	MR	1	0639		0586		0903		0761		0784		0881
Q41	MQ0	1	1082		6291		0		4119		0		0
Q42	-MQ0/10	10	0		0		1163		0		0335		1449
Q43	-MAIS	1	3914		2911		1812		1590		1963		2775
Q44	-MAIS/10	10	5518		5446		5001		5051		4605		3919
P45	10MSNT	.1	0047		0		0		0		0		0
P46	-MSNT/10	10	0		0049		0008		1671		2940		4624
P47	MQTR	1	0		1135		0		4626		3590		4087
P48	-MQTR	1	09547		0		4111		0		0		0
P49	100NU	1	0044		0		0		0		0		0
Q45	-100NU	1	0		6518		3803		2883		2372		2685
Q46	10NV	10	1224		1404		1925		2647		3072		3450
Q47	100NW	1	0961		0		0		0		0		0
Q48	-100NW	1	0		1294		6850		6998		5678		1745
Q49	NP	1	0		0		0		0		0082		0311
Q90	-NP	1	.2926		2242		1083		0325		0		0
Q91	NQ	1	0801		1276		0		0		0		0
Q92	-NQ	1	0		0		0146		1229		2213		3609
Q93	-NR/10	10	0390		0488		0676		0912		1089		1262
Q94	NQ0/100	100	1073		0901		0680		0577		0593		0738
Q95	NAIS	1	0920		0930		1322		1730		1990		2324
Q96	NBIS	1	0		0		3286		6816		7646		3387
Q97	-10NBIS	.1	3920		0027		0		0		0		0
Q98	10NSNT	.1	0		0018		0002		0416		0782		1446
Q99	NQTR/100	100	1116		0992		1072		1127		1225		1286

APPENDIX III
DESIGN AND PERFORMANCE GOALS FOR THE ADVANCED HYDROFLUIDIC STABILIZATION SYSTEM

Detailed herein are the design and performance goals used as guidelines during the analysis and development of the hydrofluidic autopilot. These design goals were generated to be in general agreement with the helicopter flying and ground handling quality requirements detailed in Military Specifications MIL-H-8501A and MIL-F-8785. These goals are applicable to the hover, transition, and forward-flight regions as appropriate.

The design goals detailed herein define performance criteria for pilot relief autopilot to augment and control the pitch, roll, yaw, and collective axes of the UH-1C helicopter using hydrofluidics as the principal control medium. In the Statement of Work, no performance requirements were specified other than that the autopilot should provide a pilot relief function. With these general requirements in mind, a set of detailed design goals was generated that permits pilot relief autopilot performance evaluation in light of these self-imposed system requirements.

These design goals are general in that they are written to cover the complete airspeed flight envelope of the UH-1C and various mode configurations. If during the analysis phase of the program a particular mode was not incorporated into the selected baseline system configuration or was incorporated for a restricted flight envelope, then the particular design goals for that mode either do not apply or apply only for the specified flight envelope.

The maneuvering performance specifications were written for a moderate maneuvering autopilot. The actual maneuvering performance flight envelope of the pilot relief autopilot/UH-1C combination will be directly dependent on the feedback parameters and mechanization complexity of the selected baseline system configuration. The autopilot analysis studies were directed at achieving the maneuvering performance specified herein; however, some maneuvering specifications required redefinition at the completion of the autopilot analysis phase of the program to be in agreement with the selected baseline system complexity and configuration.

LONGITUDINAL AXIS DESIGN GOALS

The controls shall be free from objectionable transient forces in any direction following rapid longitudinal stick deflections.

There shall be no objectionable or excessive delay in the development of angular velocity in response to control displacement. The angular acceleration shall be in the proper direction within 0.2 second after longitudinal control displacement.

The helicopter shall exhibit satisfactory dynamic stability characteristics following longitudinal disturbances in forward flight. Specifically, the stability characteristics shall be unacceptable if the following are not met for a single disturbance in smooth air:

a) Any oscillation having a period of less than 5 seconds shall damp to one-half amplitude in not more than 2 cycles, and there shall be no tendency for undamped small-amplitude oscillations to persist.

b) Any oscillation having a period greater than 5 seconds but less than 10 seconds shall be at least lightly damped.

c) Any oscillation having a period greater than 10 seconds but less than 20 seconds shall not achieve double amplitude in less than 10 seconds.

Longitudinal control power shall be such that when the helicopter is hovering in still air at the maximum overload gross weight or at the rated power, a rapid 1.0-inch step displacement from trim of the longitudinal control shall produce an angular displacement at the end of 1.0 second which is at least $45/(W + 1000)^{1/3}$ degrees. W represents the maximum overload gross weight of the helicopter in pounds.

The typical normal gross weight of the UH-1 helicopter was taken to be 9500 pounds. This is the value recommended by the aircraft manufacturer, Bell Helicopter Company.

Therefore,

$$\theta = 45/\sqrt[3]{10,500} = 2.05 \text{ degrees}$$

The gross weight used during this analysis is 6800 pounds. This decreased weight over that of the recommended normal gross weight actually presents a more severe performance design goal. The resulting angular displacement using this value of gross weight is as follows:

$$\theta = 45/\sqrt[3]{7800} = 2.26 \text{ degrees}$$

The pitch axis damping ratio of the UH-1 helicopter shall be increased from approximately 0.3 to approximately 0.5 or greater at or near the 100-knot flight condition. This design goal may be demonstrated by a

simulated vertical gust input and measuring the aircraft performance in damping the gust.

At the hover flight condition, the time to damp the gust may be significantly longer to account for the free-vehicle damping characteristics.

DIRECTIONAL AND LATERAL AXES DESIGN GOALS

Directional control power shall be such that when the helicopter is hovering in still air at the maximum overload gross weight or at rated takeoff power, a rapid 1.0-inch step displacement from the trim of the directional control shall produce a yaw displacement at the end of 1.0 second which is at least $110/\sqrt[3]{W + 1000}$ degrees. W represents the maximum overload gross weight of the helicopter in pounds.

Again, the typical normal gross weight of 9500 pounds was used.

Therefore,

$$\psi = 110/\sqrt[3]{W + 1000} = 5.03 \text{ degrees}$$

The resulting angular displacement using the 6800 value of gross weight is

$$\psi = 110/\sqrt[3]{7800} = 5.55 \text{ degrees}$$

The response of the helicopter to directional control deflection, as indicated by the maximum rate of yaw per inch of sudden pedal displacement from trim while hovering, shall not be so high as to cause a tendency for the pilot to overcontrol unintentionally. In any case, the sensitivity shall be considered excessive if the yaw displacement is greater than 50 degrees in the first second following a sudden displacement of 1.0 inch from trim while hovering at the lightest normal service loading.

The controls shall be free from objectionable transient forces in any direction following rapid lateral stick or pedal deflections. The response of the helicopter to lateral control deflection, as indicated by the maximum rate of roll per inch of sudden control deflection from the trim setting, shall not be so high as to cause a tendency for the pilot to overcontrol unintentionally. In any case, at all levels of flight speeds, including hovering, the control effectiveness shall be considered excessive if the maximum rate of roll per inch of stick displacement is greater than 20 degrees per second.

There shall be no objectionable or excessive delay in the development of angular velocity in response to lateral or directional control displacement. The angular acceleration shall be in the proper direction within 0.25 second after the control displacement.

Lateral control power shall be such that when the helicopter is hovering in still air at the maximum overload gross weight or at the rated power, a rapid 1-inch step displacement from trim of the lateral control shall produce an angular displacement at the end of one-half second (0.5) of at least $27/\sqrt[3]{W + 1000}$ degrees. W represents the maximum overload gross weight of the helicopter in pounds.

Again, assuming the typical normal gross weight of the UH-1 helicopter of 9500 pounds,

$$\phi = 1.23 \text{ degrees}$$

Using the gross weight of 6800 pounds, the resulting angular displacement is

$$\phi = 1.36 \text{ degrees}$$

The directional axis damping ratio of the UH-1 helicopter shall be increased from approximately 0.3 to approximately 0.6 or greater at the high-speed flight conditions. This design goal may be demonstrated by a simulated lateral gust input and measuring the aircraft performance in damping the gust.

The lateral gust input shall be damped to within 10 percent of its maximum value within 1.0 to 1.5 seconds following the gust.

This design goal does not apply to the hover flight condition.

STABILITY AUGMENTATION SYSTEM

The design of the stability augmentation system will be directed at optimizing the damping versus control response performance of the UH-1 helicopter. Control concepts will be evaluated from the viewpoint of increasing vehicle damping and augmenting the free vehicle's short-term response characteristics to provide a rate response proportional to control stick inputs. The developed stability augmentation system will generally augment the UH-1 helicopter in a manner presently accomplished by the mechanical stabilizer bar. This goal is imposed on the design of the pilot relief autopilot plus SAS to utilize, where possible, FSAS hardware (developed under Contract DAAJ02-69-C-0036) which was designed to provide this augmentation function.

ATTITUDE HOLD - ROLL

The autopilot shall be capable of maintaining the helicopter at its existing roll attitude to within ±1.0 degree for a period not less than 15 minutes, if this attitude is less than ±30.0 degrees of bank angle.

When the aircraft is maneuvered to an attitude beyond the attitude hold bank limit (±30.0 deg), the attitude hold function shall be inoperative and the system shall be in a rate-stabilized configuration.

Residual Oscillations -- Residual oscillations caused by system nonlinearities will be less than ±0.5-degree roll attitude (ϕ) or less than ±0.05-g lateral acceleration (N_Y).

Attitude Command -- Smooth and rapid with less than 20 percent overshoot. Roll attitude solution time will be less than 5 seconds, and roll attitude response time will be less than 2 seconds.

With the exception of residual oscillations, these design goals will be applied to demonstrate system performance for airspeed generally greater than 60 knots. Roll attitude hold performance will also be evaluated in light of the above design goals at airspeeds less than 60 knots; however, the numerical values for static accuracy, attitude, and command and transient response design goals may require relaxation.

ATTITUDE HOLD - PITCH

The autopilot will be capable of maintaining the helicopter at its existing pitch attitude to within ±1.0 degree for a period not less than 15 minutes, if this attitude is within ±20.0 degrees of pitch angle.

When the aircraft is maneuvered to a pitch attitude beyond the attitude hold limit (±20.0 degrees), both the pitch and roll attitude hold functions shall be inoperative.

Residual Oscillations -- Residual oscillations caused by system nonlinearities will be less than ±0.5 degree pitch attitude (θ) or less than ±0.05 g normal acceleration (N_Z).

Attitude Command -- Smooth and rapid transient response with no more than one overshoot, which will be limited to 20 percent. Pitch attitude response time will be between 1.0 and 3.0 seconds.

With the exception of residual oscillations, these design goals will be applied to demonstrate system performance for airspeeds generally greater than 60 knots. Pitch attitude hold performance will also be evaluated in light of the above design goals at airspeeds less than 60

knots; however, the numerical values for static accuracy, attitude command, and transient response design goals may require relaxation.

ALTITUDE HOLD

At the pilot's option, the autopilot will maintain the aircraft at its existing altitude.

Altitude Command -- For an altitude step or command of at least 100 feet, the first overshoot of the transient response will not exceed 20 percent. The transient altitude error will have a response time of 5.0 to 20.0 seconds.

Altitude Rate Engagement -- Engagement during rates of climb or descent up to 1000 feet per minute will select the existing barometric altitude and control the aircraft to this altitude as a reference. Altitude overshoot from the engage reference will not exceed 15 percent of the climb or dive rate in ft/min. The response time of the altitude overshoot will not exceed 20 seconds.

Residual Oscillations -- Residual oscillations will have a period of at least 20 seconds. Incremental normal acceleration will not exceed 0.05 g.

Static Accuracy -- Long-term altitude hold will be maintained within ±30 feet and wings-level bank angle.

If during the analysis phase of the fluidic autopilot program it is determined that altitude hold will be mechanized only through the collective axis, the design goals will be applied to demonstrate system performance for airspeeds from hover to nominal cruise. Similarly, if it is determined that altitude hold will be mechanized only through the pitch axis, the design goals will be applied to demonstrate system performance for airspeeds generally greater than 60 knots. Altitude hold will also be evaluated in light of the design goals at airspeeds less than 60 knots; however, the numerical values for altitude command and transient response design goals may require relaxation.

HEADING HOLD

When the heading hold mode has been selected by the pilot, the autopilot will maintain the aircraft at its existing heading through control of bank angle or through the yaw axis (tail rotor).

Static Accuracy -- When flying a fixed heading in still air with bank angle at "wings level" and constant airspeed, upon engagement of the heading hold the fixed heading will not change by more than 2.0 degrees. The resulting heading will be maintained within ±1.0 degree for a period not less than 15 minutes.

Residual Oscillations -- Residual oscillations caused by system nonlinearities will be less than ±0.5 degree heading or less than ±0.05 g lateral acceleration (N_Y).

Heading Response -- For a tail rotor overpower (lateral wind step or heading initial condition or step command) which creates approximately 0.15 g lateral acceleration at speeds where heading is controlled via roll, the heading response will be smooth and rapid. The vehicle will return to the reference heading with one overshoot, which will not exceed 20 percent of the initial deviation. The response time will be between 5 seconds and 20 seconds.

For a tail rotor overpower (lateral wind step or heading initial condition or step command) which creates at least 5 degrees heading error at speeds where heading is controlled via the tail rotor, the heading response will be smooth and rapid. The vehicle will return to the reference heading within one overshoot, which will not exceed 20 percent of the initial deviation. The response time will be less than 10 seconds.

For tail rotor heading hold at the hover flight condition with a heading rate initial condition or step command, the amplitude of the heading error response will decrease by at least 80 percent per half cycle. The response time will be within 3 to 5 seconds after initiation of the command input.

If during the analysis phase of the fluidic autopilot program it is determined that heading hold will be mechanized only through the roll axis, the design goals regarding roll axis heading hold will be applied to demonstrate system performance for airspeeds generally greater than 60 knots. Roll axis heading hold performance will also be evaluated in light of the design goals at airspeeds less than 60 knots; however, the numerical values for heading response and transient response design goals may require relaxation. Similarly, if it is determined that heading hold will be mechanized only through the tail rotor axis, the design goals regarding yaw axis heading hold will be applied to demonstrate system performance for airspeeds up to the nominal cruise speeds of the helicopter; the numerical values for heading and transient response design goals may require relaxation.

HEADING SELECT

For up to 89 degrees change in heading commanded at speeds where heading control is via roll axis, the roll into and out of the turn shall be accomplished smoothly with no noticeable variation in roll rate. The bank angle while turning shall be limited to a value yet to be determined. The aircraft will not overshoot the selected heading by more than 10 percent.

For up to 89 degrees change in heading commanded at speeds where heading is controlled through the tail rotor axis, entry into and termination of the turn will be smooth and rapid. The aircraft will not overshoot the selected heading by more than 10 percent. The commanded yaw rate while turning shall be limited to a value yet to be determined.

Servoactuator Hardover -- In trimmed level flight at any speed, out-of-trim conditions resulting from abrupt power-operated control system failure will be such that, with controls free for at least 3.0 seconds, the resulting rates of yaw, roll, and pitch shall not exceed 10 degrees per second, and the change in normal acceleration will not exceed ±0.5 g.

APPENDIX IV
FLUIDIC COMPONENT STUDIES

ALTITUDE ERROR SENSOR

Sensor Design

The work performed on the altitude sensor consisted of (1) the design of a hydrofluidic pickoff for an existing differential bellows-type altitude error sensor, (2) the fabrication of parts for modification of the sensor, and (3) sensor development tests. The hydrofluidic pickoff used is a flapper-nozzle valve assembly, similar to that used with conventional servovalves, which was substituted for the original electrical potentiometer. A schematic of the altitude error sensor is shown in Figure 39, and a picture of the development model is shown in Figure 40.

The sensor is engaged by closing a solenoid valve which traps a reference pressure on one side of the differential bellows. Changes in altitude produce a change in pressure on the other side of the bellows. This differential pressure becomes a force on the flapper assembly, producing a differential hydraulic pressure at the pickoff.

Test Results

Calibration

The input-output relation of the device is shown in Figure 41. The scale factor is slightly larger than 1.0 psi/500 ft altitude = 0.002 psi per foot of altitude. Adjustment of the flapper valve nozzles provides an easy means of changing the gain if desired. A range of ±500 feet of altitude is readily obtainable.

Sensitivity

Exact determination of the minimum change in input to produce a change in output was limited by capability of the measuring equipment; however, it is estimated as follows:

Change of altitude in one direction -- 2-1/2 feet max

Change of altitude from one direction to opposite direction -- 5 feet max

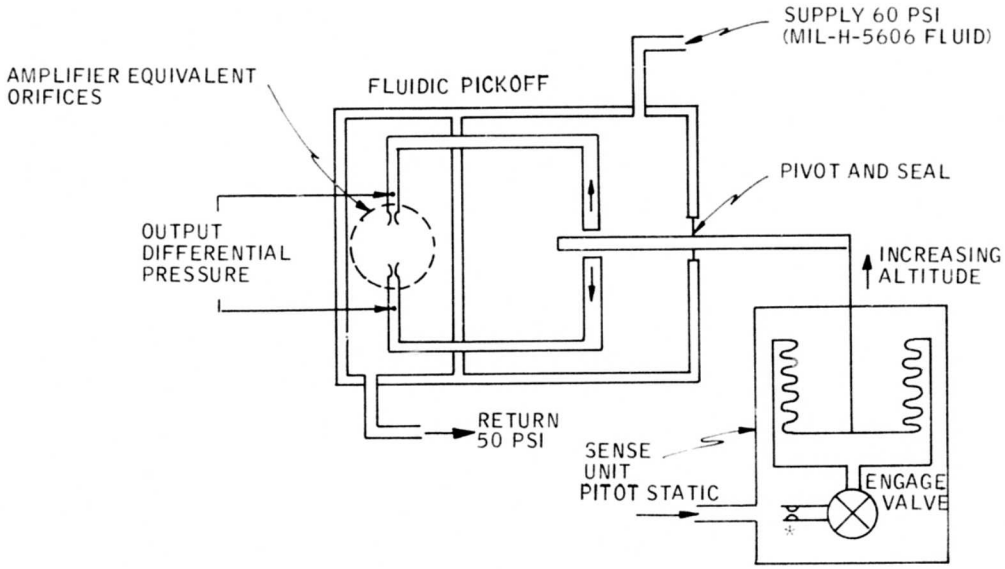

Figure 39. Altitude Error Sensor Schematic.

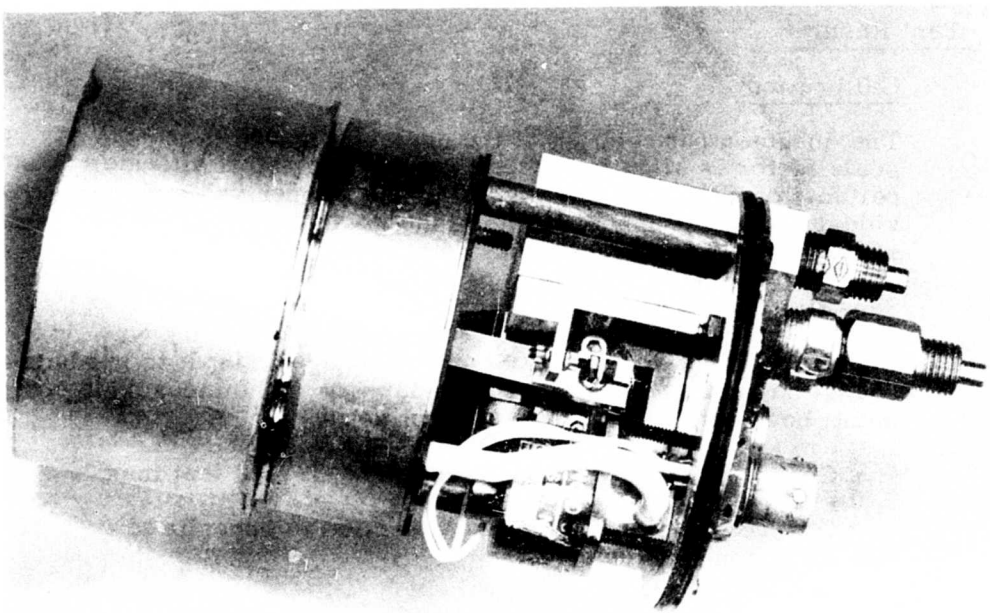

Figure 40. Altitude Error Sensor.

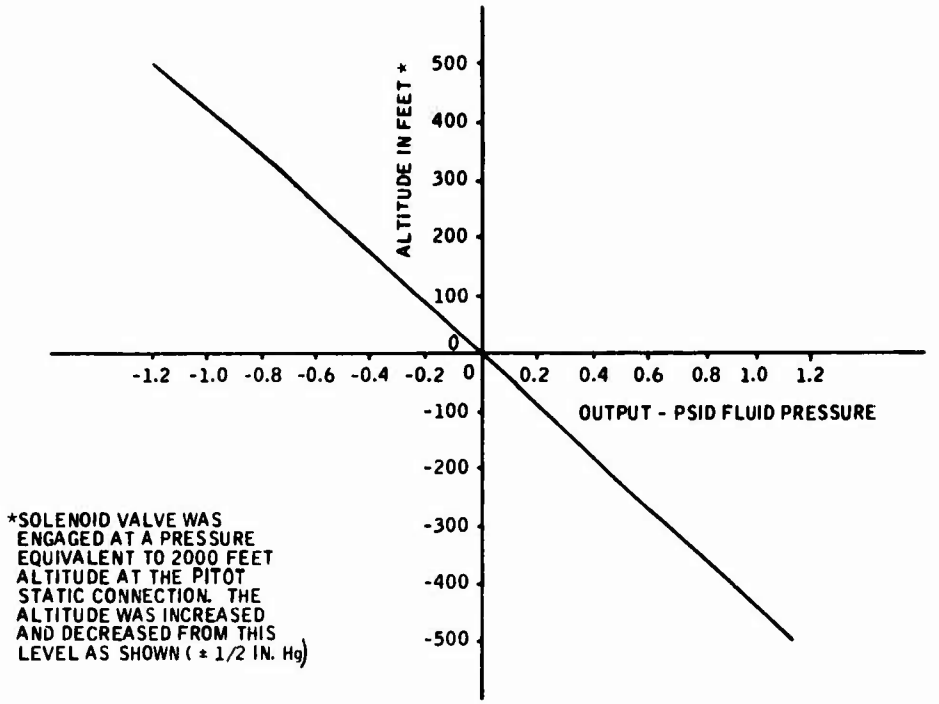

Figure 41. Altitude Error Sensor Performance.

Engage Error

The change in output as a result of energizing the solenoid valve is not detectable.

Response Time

The response time involves the flow of air into or out of the sensor as well as the spring rate of the system. Some variation of the response time with the size of step input occurs. With a step input of 100 feet of altitude, the response time was measured at 0.1 second.

Vibration

The device was vibrated solid-mounted and also on a vibration isolation rack in three axes per MIL-STD-810B, Figure 514-1, Curve B. The output of the device resulting from vibration did not show up on the transducer readout meter, which remained at null. A sine wave-type output was detected by a scope. The testing was limited to scanning to find the trouble areas. The results indicate that vibration at this level will not present a problem for sensor operation.

Temperature Effects

Temperature tests were run for varying ambient temperature (air) and varying oil temperature to determine (1) the variation in sensor output when disengaged (no air trapped) and (2) the variation in output with temperature when the sensor is engaged (trapped air sample). Through proper materials matching and nulling of the fluidic pickoff, null shift of the sensor output when disengaged was reduced to less than 10 feet.

With the sensor engaged, both ambient and oil temperature change have an effect on the trapped air sample. The bellows-sensing unit of this device includes a liquid-filled capsule, which acts to compensate for trapped air expansion with temperature change. With the present design, the compensator does not provide enough compensation to eliminate temperature sensitivity over the total environment range. More fluid could be added to increase the compensation if desired. However, as the temperature variation during engagement will normally be small in comparison to the total environmental range, present performance may be satisfactory. For a ±10°F temperature change (either air or oil), a null shift of approximately ±15 feet results. If a large temperature change does occur during operation, the sensor could be disengaged momentarily and then reengaged with a new reference air sample.

ALTITUDE RATE SENSOR

Early in the program, there was a feeling that an altitude rate sensor would be needed to obtain adequate damping in the altitude hold mode. Later, during system simulation and analysis, it was found that an altitude rate sensor would not be required for the proposed system design. However, limited development and testing of an altitude rate sensor was performed as described below.

Sensor Design

The altitude rate sensor would be similar to the altitude error sensor shown in the schematic of Figure 39 except that (1) an orifice would be placed in the input line to one side of the bellows and (2) the engage solenoid valve would open the line between the orifice and the bellows to static pressure when the sensor is disengaged. The combination of orifice and volume on one side of the bellows creates a lagged static pressure signal on one side of the bellows. This pressure is subtracted from the same non-lagged pressure on the other side of the bellows to obtain an output signal proportional to high-passed static pressure. By adjusting the lag time constant, the output of the sensor can be made approximately proportional to altitude rate over a specific frequency range.

Test Results

Limited response tests were performed on the altitude error sensor (Figure 40), modified so as to sense altitude rate. Satisfactory performance was obtained for several resistance values in the unit.

SIGNAL LIMITER

Circuit Design

In the heading hold mode of the advanced stabilization system, the heading error signal must be limited in the hydrofluidic control circuit. Therefore, during the program, an amplifier circuit was designed and tested which provides improved signal limiting capability. Figure 42 shows a schematic of the two-stage amplifier circuit and resistor network used. The improved saturation characteristic is obtained by bleeding between amplifier stages, so that the first- and second-stage amplifiers saturate at the same circuit input. The saturation or limit level can be adjusted by varying the output load on the circuit.

Test Results

Figure 42 shows test results for the limit circuit. Curve A of Figure 42 shows the usual saturation characteristic of an amplifier, and curve B shows the improved characteristic obtained with proper bleed setting. As shown, some sacrifice in gain is required to obtain the improvement; however, this will not present a problem in most applications.

TRIM INDICATOR

Indicator Design

A commercially available differential pressure gauge (Figure 43) was tested for application as a trim indicator for the system. The unit normally has a range of zero to 10 psid, but it was biased so the range was ±5 psid for testing. Although the unit is sensitive to small differential pressures, it can be operated at pressure levels up to 6000 psi and can withstand high-differential pressures without affecting performance.

Test Results

Figure 44 shows data for the differential pressure gauge. The normal gauge characteristic and the reduced hysteresis characteristic, obtained when the gauge is tapped lightly to reduce hysteresis, are shown.

FLUID - MIL-H-5606 HYDRAULIC FLUID
TEMP - +100°F

CURVE A - WITH BLEED ORIFICES BLOCKED - GAIN = 16.47
CURVE B - GAIN = 7.89

AMPLIFIER ID
1 FG 1001 AA-09 S/N 4
2 FG 1001 AA-08 S/N 2

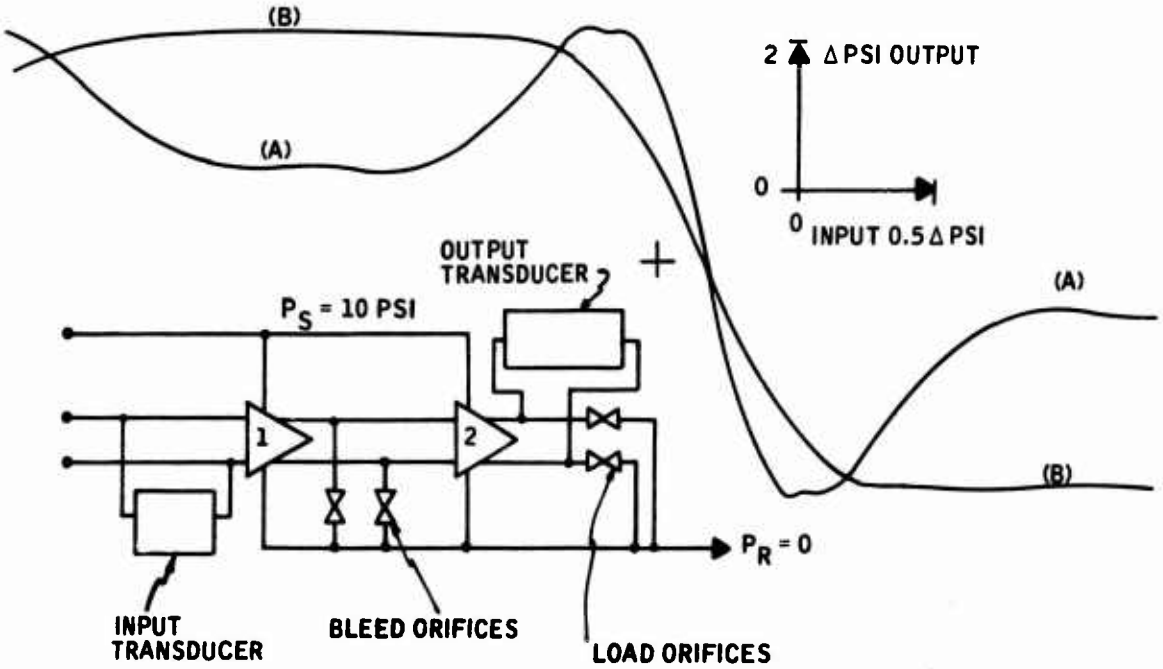

Figure 42. Fluidic Signal Limiter.

Figure 43. Differential Pressure Gauge.

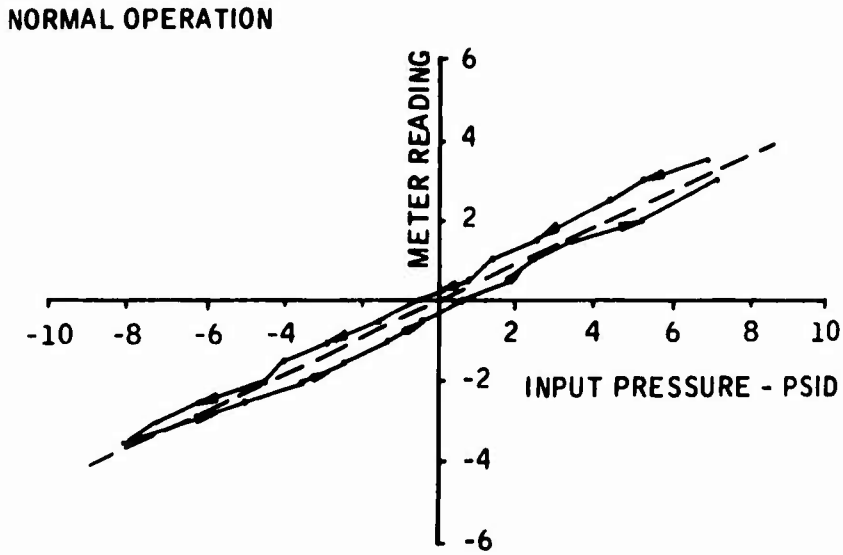

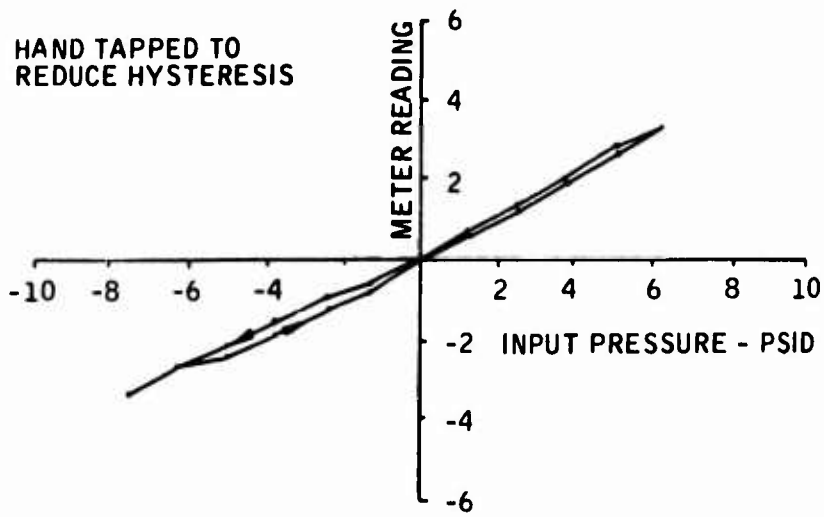

Figure 44. Trim Indicator Characteristics.

The input hysteresis in the normal case is approximately ±0.5 psid, which would be equivalent to a null offset of approximately ±0.5 degree of attitude in the proposed system mechanization. This hysteresis may be reduced due to the helicopter vibration environment. It is believed that this device would be satisfactory for use as a trim indicator in the fluidic system.

TRIM ACTUATOR

During the early system design work on the program, it was felt that a trim actuator may be needed in the final advanced stabilization system mechanization. As a hydraulic trim actuator was not available (presently used trim actuators are commonly electrical), the decision was made to define a trim actuator mechanization which would be compatible with the proposed hydrofluidic flight control system. Later results from the system analysis showed that a trim actuator would not be required. However, the trim actuator design presented here may be applicable in future, more complex hydrofluidic flight control applications.

General Description

The trim actuator mechanizations investigated were based on the assumptions that the actuator to be trimmed is a series servoactuator used as an extensible link and that the aircraft is a UH-1-type helicopter which has a force trim system on board. Because of the series servoactuator being used with autopilot modes, problems arise such as servoactuator authority, engage transients, etc. The flight control system can generate signals great enough for the series servoactuator to go hardover; and because the stick does not move for autopilot commands, the pilot does not know that he has run out of authority. Good aircraft practice dictates that the authority of series servoactuators be kept small (15 percent or less, if possible).

To alleviate this problem, a trim actuator can be added that monitors the series servoactuator position and through a low-response actuator moves the control surfaces, which in turn unbalance the system, causing the servoactuator to move toward its null position. When the servoactuator is returned to null, the trim actuator stops moving. This does not disrupt the aircraft flight condition because the trim actuator moves slowly.

Two mechanizations of a trim actuator are shown in Figure 45: a series trim system where the trim actuator is in series with the control linkage, and a parallel trim system where the trim actuator is mounted to the aircraft frame and moves the pilot's control stick. The sensor which monitors the series servoactuator output shaft is basically the same in each case.

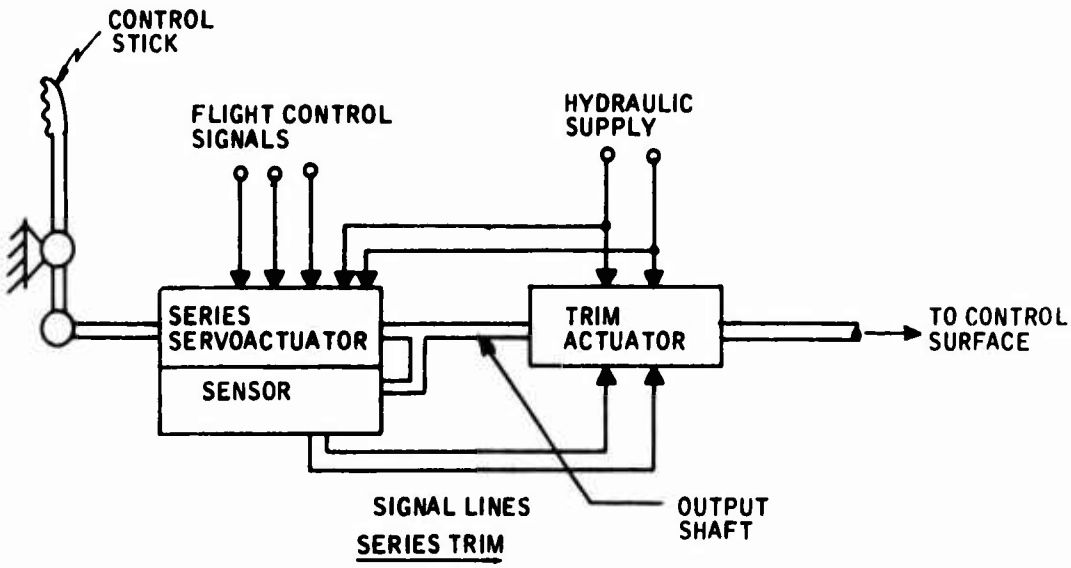

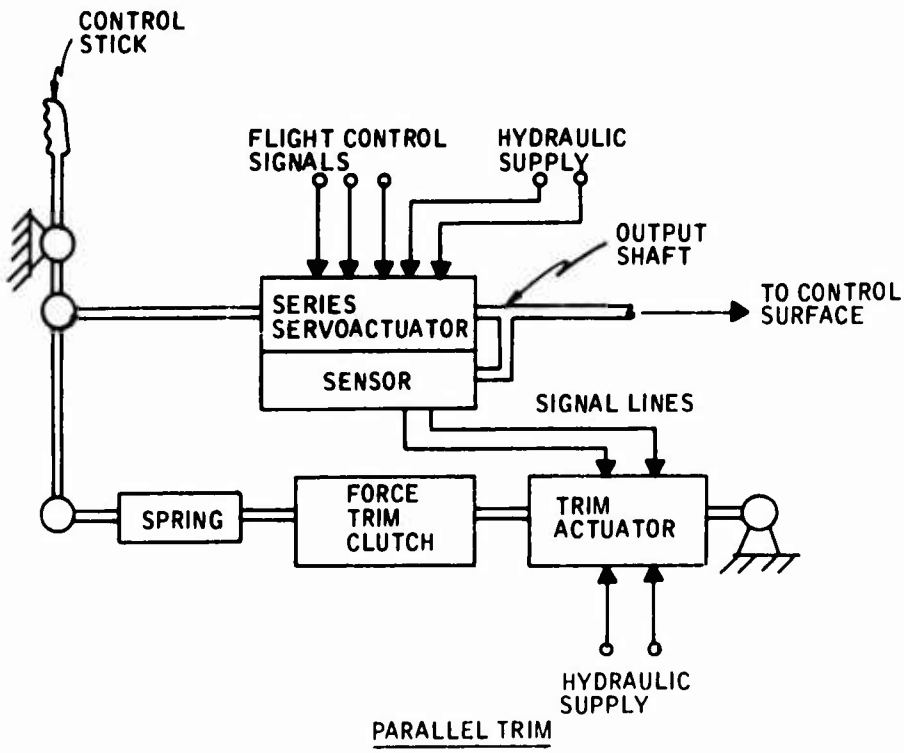

Figure 45. Trim Actuator Mechanizations.

Series Trim Actuator

Shown in Figure 46 is the complete series trim actuator mechanization. The system is shown in the null position with the system pressurized. If the trim actuator is located immediately adjacent to the servoactuator and the output shaft of the servoactuator attaches to the trim actuator, the complete trim system can be mounted together with the position sensor shaft connected to the case of the servoactuator. If, in Figure 46, the sensor shaft is moved to the right at the 50-percent point, port 3 will be open and port 1 will close. This pressure causes the spool valve to move, latching to the left pin. Pressure is applied to the trim actuator through orifices R_1 and R_2. These orifices control the speed of the actuator. When the actuator has moved sufficiently to drive the servoactuator back to its null position, the pressure at port 3 increases, removing the latching pin. This allows the spool valve to return to neutral, which closes off the ports to the actuator, hydraulically locking it in place. Anytime the servoactuator is moved to its 50 percent of rated stroke position, the trim actuator will be energized and will drive it back to null.

During shutdown, the trim actuator will return to its center position and lock at that position. The operation of this is as follows: The supply pressure reduces to zero since the system has been shut off. This allows the centering valve to open and the centering sleeves to force the actuator piston to null. The oil on one side of the piston is forced through restrictor R_3 to the other side of the piston. This is the only path the oil can take as the spool valve is closed. The restrictor slows the piston travel to approximately 0.1 in./sec. This eliminates sudden changes when the system is shut off and puts the actuator at null, ready for the next time the autopilot is engaged.

Parallel Trim Actuator

Shown in Figure 47 is a parallel mechanization of a trim actuator system. This system is connected into the force trim system presently on the aircraft. The force trim system, when energized through a magnetic clutch, connects the pilot's control stick to the airframe through a spring. By placing the trim actuator between the magnetic clutch and the airframe, the trim system will be in parallel with the pilot's controls, but it will still allow the pilot to move the controls if he desires.

The operation of the system is described below.

When the servoactuator moves right to its 50 percent of rated stroke position, port 1 becomes pressurized, causing the right latching valve to switch to the left, with the ball dropping into the detent and holding the

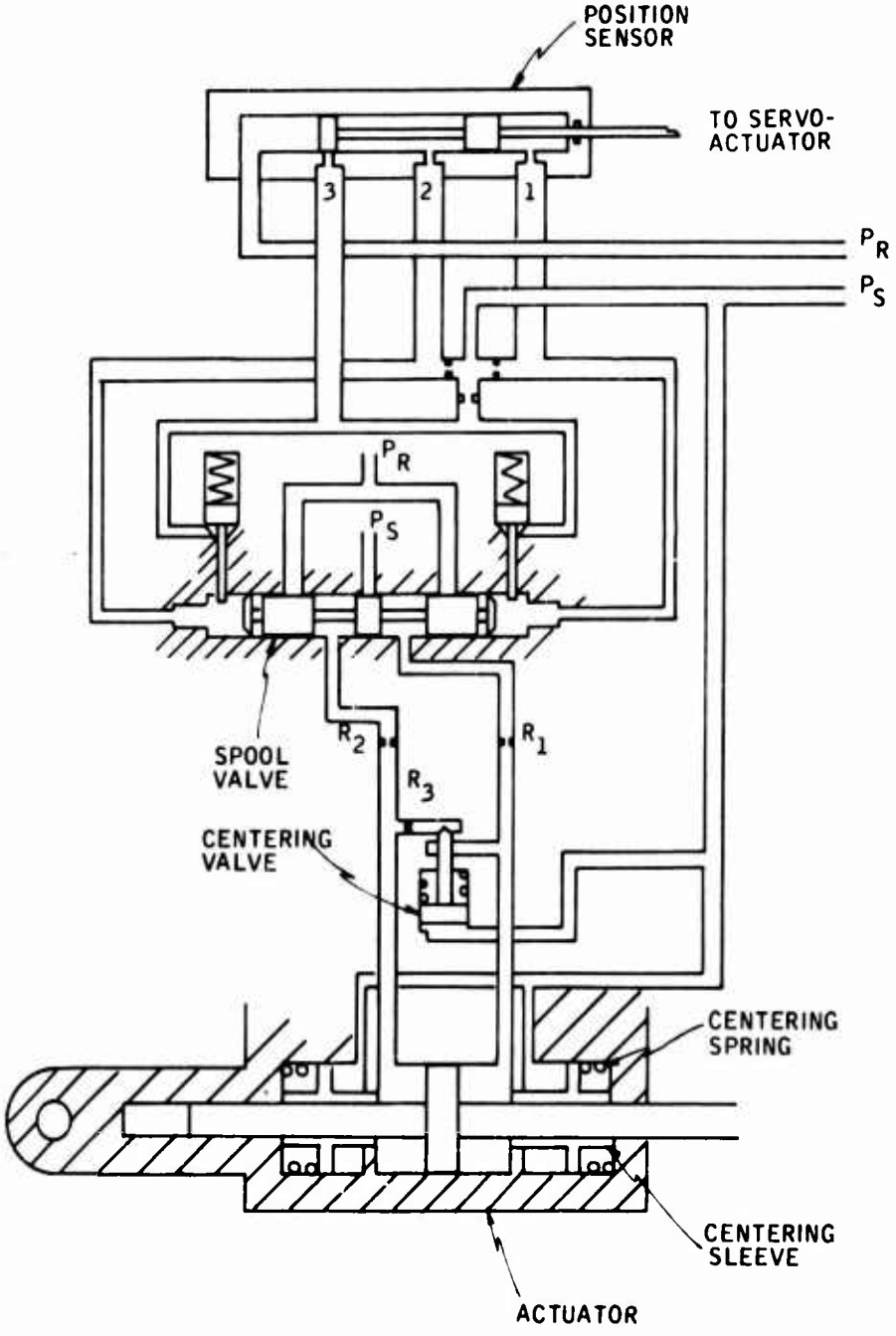

Figure 46. Series Trim Actuator.

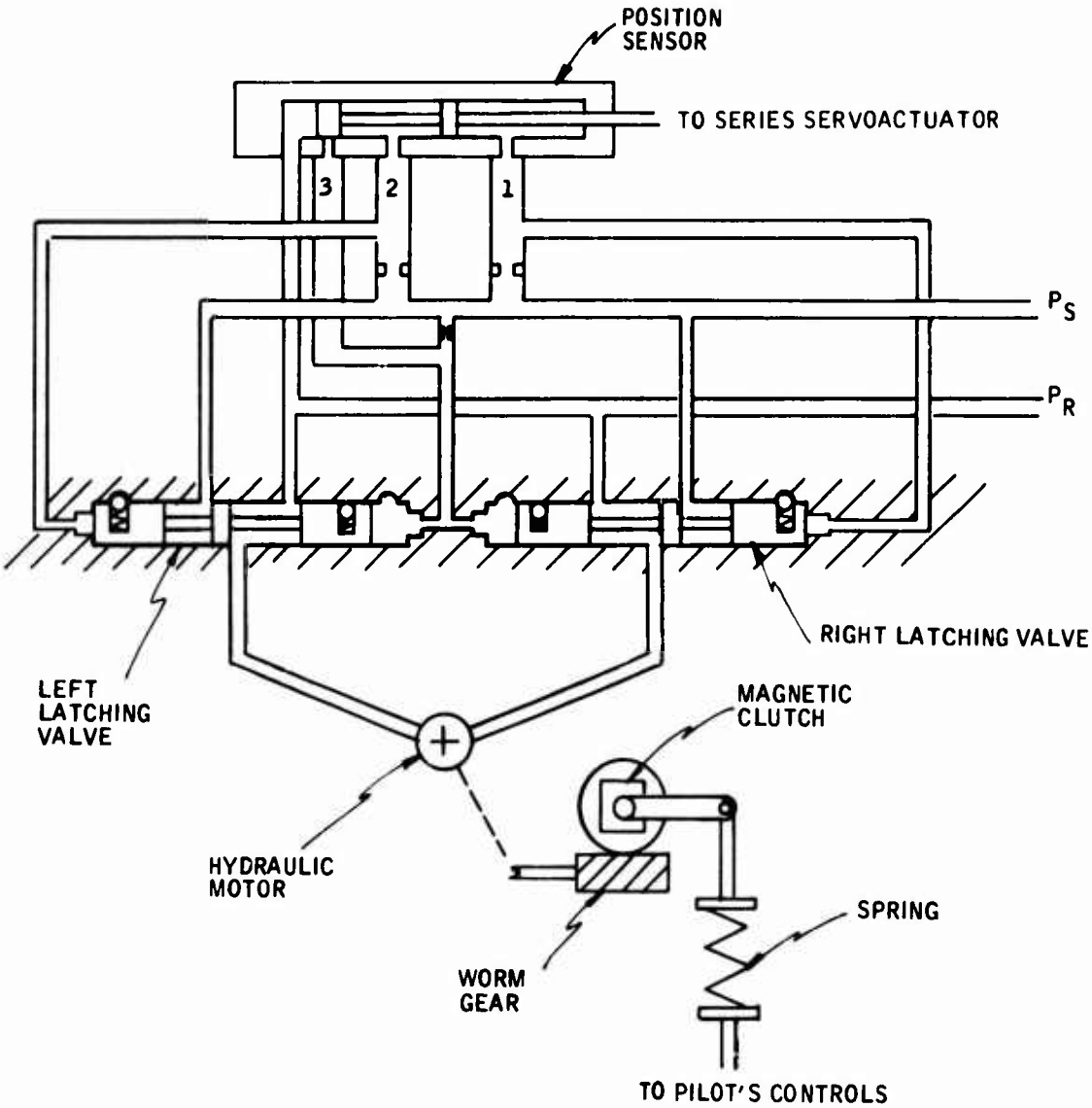

Figure 27. Parallel Trim System.

valve in the open position. This applies pressure to the hydraulic motor, which moves the pilot's controls through the worm gear, magnetic clutch, and spring. The series servoactuator is then driven back to null through the flight control system. When the series servoactuator is back to null, port 3 is pressurized, switching the right latching valve to the off position and stopping the hydraulic motor. The system is locked in this position due to the gear ratio of the worm gear. To disengage the system, it is only necessary to deenergize the magnetic clutch.

Recommended Approach

Of the two approaches defined for the trim actuator, the parallel trim system is believed to be the best for this application. The advantages of the parallel trim are (1) a generally simpler mechanization, which does not require a centering mechanism and has a simple locking technique; (2) the feature of moving the stick, so the pilot knows the position and remaining authority of his controls; and (3) less difficulty in finding mounting room for the trim actuator. The disadvantage of the parallel trim is the separation between the series servoactuator and the trim servoactuator, which requires more hydraulic lines and the transmission of the series servoactuator position sensor signal over a longer distance.

TEMPERATURE COMPENSATION

Variation in fluidic component gain with change in oil temperature has been a continuing problem during earlier fluidic system development programs. Although some success has been attained in rate sensor temperature compensation, this approach has required increased system flow; and requirements for operation over a larger oil temperature range make additional compensation necessary. Therefore, a major part of the component studies effort was devoted to improved temperature compensation techniques.

Negative Feedback Approach

As the largest part of fluidic system gain variation is normally due to gain change in the fluidic amplifiers, the first approach taken was an attempt to reduce amplifier gain change with variation in oil temperature. This approach, which uses negative feedback around an amplifier cascade, is similar to the conventional operational amplifier technique.

Figure 48 shows the normal variation in the gain of a single amplifier and a two-stage amplifier cascade over an oil temperature range of 100°F. Figure 48 also shows the effect of adding negative feedback

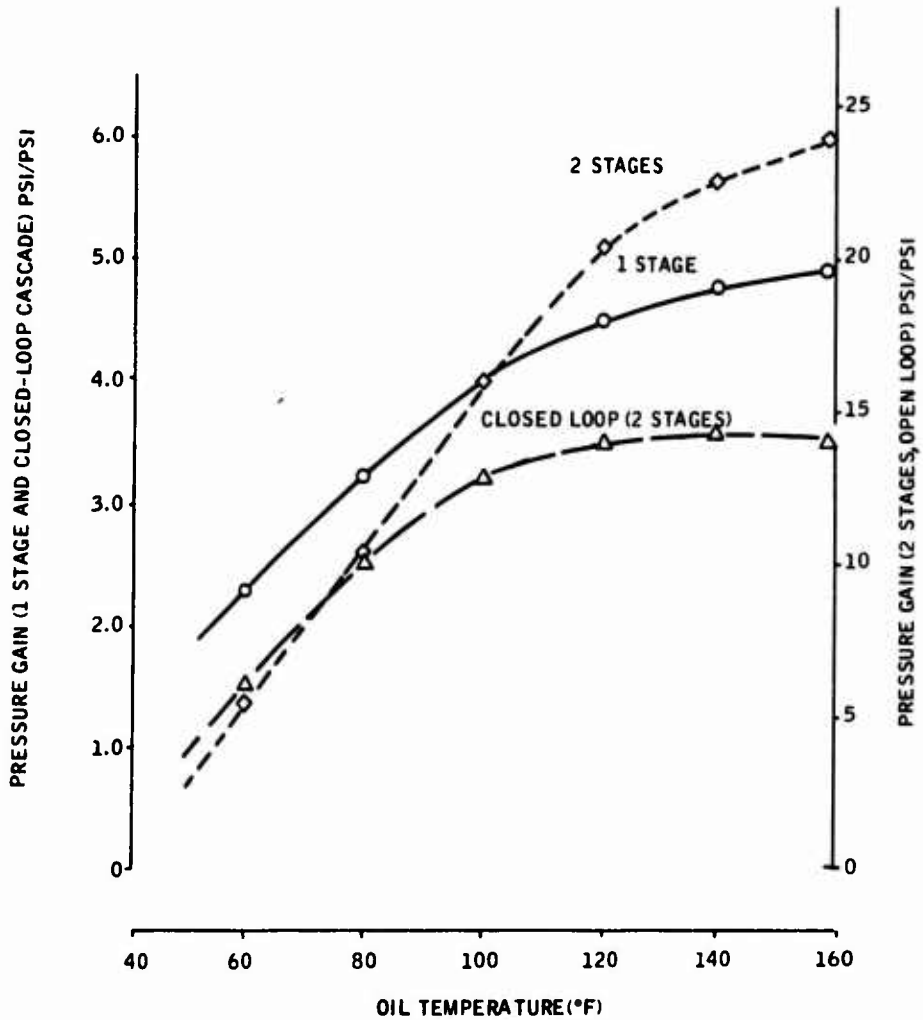

Figure 48. Negative Feedback Approach to Temperature Compensation.

around the two-stage cascade. At the higher temperatures, where the cascade gain is relatively high, the closed-loop gain remains relatively constant. However, at the low temperatures, the closed-loop gain drops significantly due to the rapid decrease in cascade gain.

Further investigation and testing were performed with different amplifier supply pressure values and additional amplifier stages; however, the same general results were found.

The problem with the present amplifier configuration is that at the supply pressure at which the amplifier is normally run, the amplifier gain drops to such a low value at low temperature that negative feedback techniques are not practical. The gain with temperature characteristic of the amplifier can be made flatter by operating at higher supply pressures; however, noise becomes a problem at high temperature. The test results indicate that amplifier gain variation is, in general, a function of supply nozzle Reynolds number, N_R:

$$N_R = \frac{Vd}{\nu}$$

where V = average supply nozzle velocity (in./sec)

d = characteristic amplifier dimension (usually nozzle equivalent diameter)(in.)

ν = kinematic viscosity of fluid ($in.^2/sec$)

Over the desired fluid temperature range (40°F to 185°F), the Reynolds number varies such that, with the present amplifier design, it is not possible to avoid both the low gain which occurs at low Reynolds number and the high noise that occurs at the higher Reynolds numbers. Therefore, this first approach to temperature compensation was dropped, and a second approach, which attempts to hold Reynolds number constant so as to minimize gain variation, was tried.

Temperature Scheduling of System Flow

As noted above, Reynolds number is a function of supply nozzle velocity, the size of the supply nozzle, and the fluid viscosity. Temperature change results in a change in fluid viscosity. Over the temperature range from 40°F to 185°F, the kinematic viscosity varies by a factor of approximately six. Therefore, to maintain a constant Reynolds number over this same temperature range, the amplifier supply flow should be varied by the same factor of six, with high flow at low oil temperature and lower flow at the high oil temperature.

To obtain this change in oil flow with variation in oil temperature, a flow control valve was designed which schedules flow with temperature, in addition to maintaining constant flow at a given temperature. Figure 49 shows a schematic of the flow control valve design. The standard flow control valve consists of a differential pressure regulator which maintains a constant pressure drop across a sharp-edged orifice, and, therefore, constant flow. This basic design was modified so that the size of the orifice is varied as a function of oil temperature.

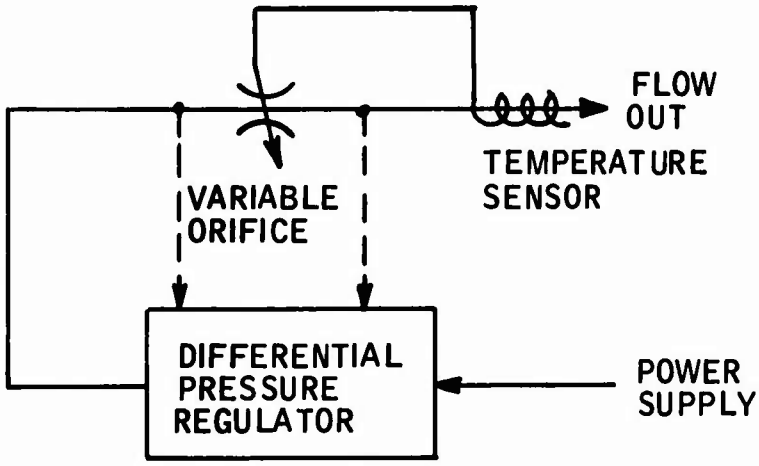

Figure 49. Temperature-Scheduled Flow Control Valve Schematic.

Figure 50 shows the internal components of the valve. The small inner spool and spring make up the pressure regulator, and the larger outer spool and sleeve make up the variable orifice mechanism. The oil temperature is sensed by two bimetal beams, which rotate the outer sleeve with respect to the spool to vary a shaped orifice. The orifice shape is designed so that the desired variation in flow with fluid temperature is obtained.

Tests on this unit and on a second modified design have demonstrated the capability to vary flow as a function of temperature, in addition to regulating flow at constant temperature. The present design, however, has a problem of stiction in the temperature scheduling mechanism, which prevents a smooth variation of flow with oil temperature change. This is not believed to be a serious problem, and modifications of the basic design have been formulated for reducing this stiction. The actual hardware modifications, however, have been postponed to a later date, when the final unit can be designed for the required system flow and temperature schedule.

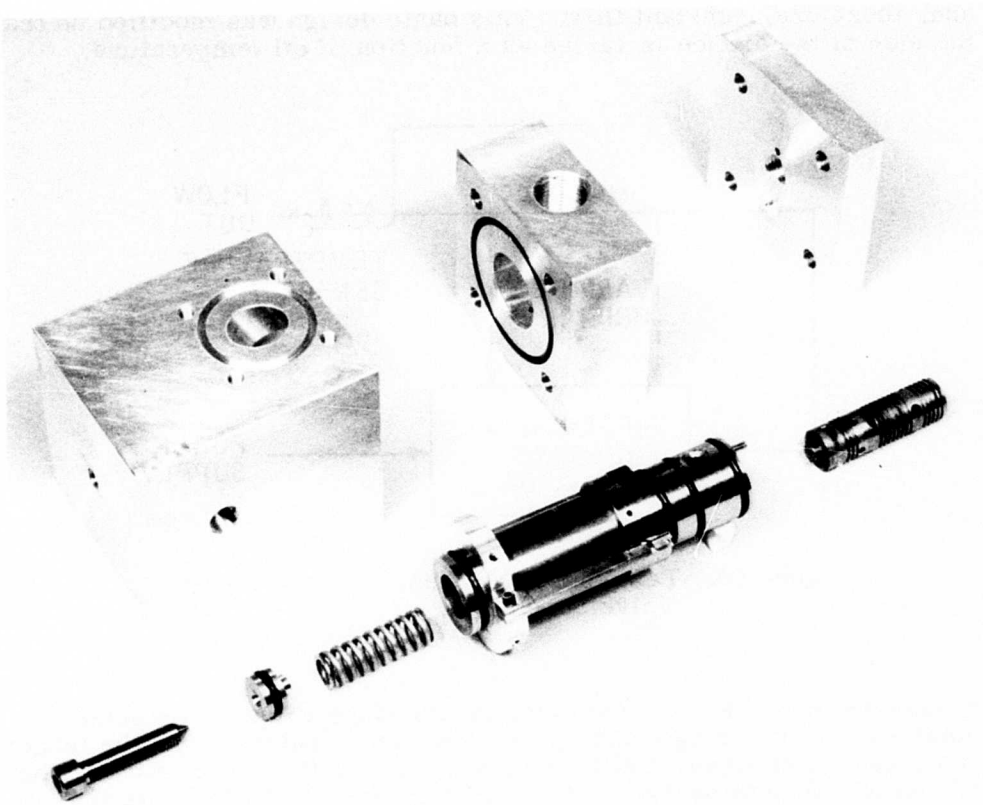

Figure 50. Temperature-Scheduled Flow Control Valve.

Component Size Reduction

The approach selected for temperature compensation requires the use of increased system flow at low oil temperature; therefore, a parallel effort was performed to reduce fluidic component flow requirements so that the system flow at low oil temperature would be within the capability of the existing aircraft hydraulic system. This effort consisted of fabricating and testing a smaller amplifier element and a smaller rate sensor pickoff. Figure 51 shows the two elements built and tested. The amplifier is an electroformed unit with supply nozzle dimensions of 0.015 inch width and 0.020 inch depth. This element will operate at approximately 60 percent of the flow of the standard amplifier used in earlier systems. Tests of this element showed that performance is similar to that of the larger standard-size amplifier.

The rate sensor pickoff is an electroformed unit with a sink size approximately one-half of that used on earlier programs. Two units were built and tested in an existing sensor body. The pickoff has a 0.050-inch sink diameter and is designed to operate with 0.4 gpm flow rate. Test results showed that performance is similar to that obtained from larger pickoffs, and repeatability between the two pickoffs is good.

The results of the component size reduction effort showed that smaller fluidic components, which require approximately 50 percent of the flow of previously used elements, can be fabricated. These smaller components exhibit approximately the same level of performance as the larger elements, and good repeatability between elements can be obtained. These smaller elements will make it possible to reduce system flow at nominal temperature by approximately 50 percent, so that with the scheduled increase in flow at low temperature, total system flow requirements will still be within the capability of the aircraft hydraulic supply.

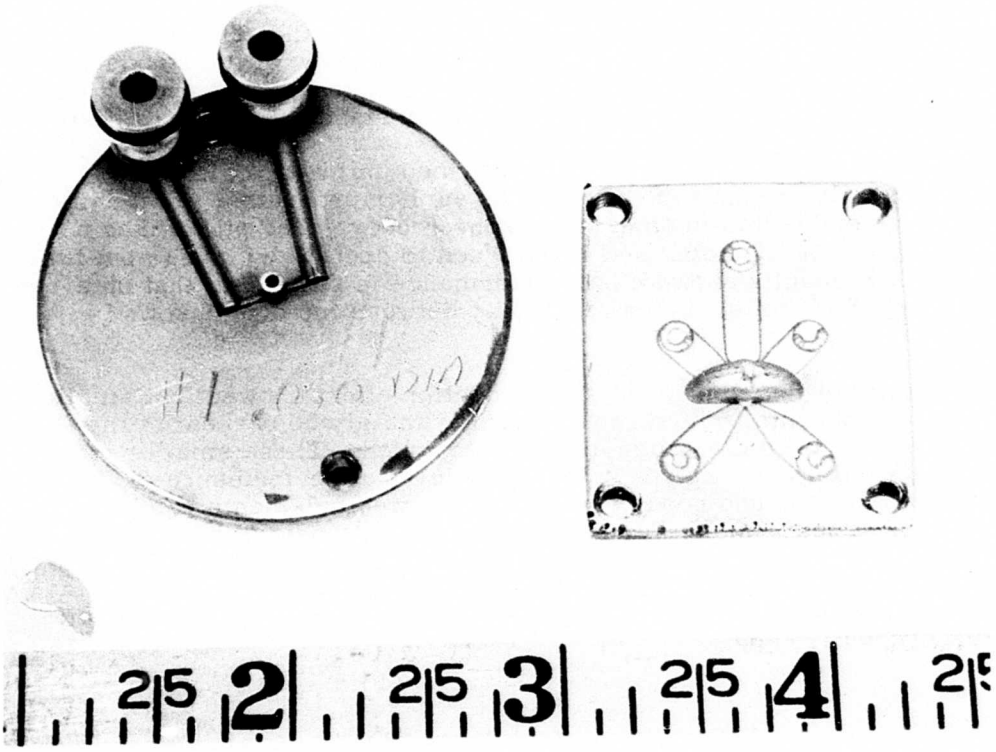

Figure 51. Reduced-Sized Amplifier and Rate Sensor Pickoff.