AD 754 387

U150344

32

LIBRARY
TECHNICAL REPORT SECTION
NAVAL POSTGRADUATE SCHOOL
MONTEREY, CALIFORNIA 93940

NUSC Technical Report 4375

An Adaptive Estimator for Passive Range and Depth Determination of a Maneuvering Target

RICHARD L. MOOSE
Sonar Technology Department

14 December 1972

NAVAL UNDERWATER SYSTEMS CENTER

Approved for public release; distribution unlimited.

NUSC Ltr. LA152-71

ADMINISTRATIVE INFORMATION

This study was performed under NUSC Project No. A-457-00, "FLIT System Development," Principal Investigator, D. Cardin (Code SB13), and Navy Subproject and Task No. S3643E-16046. The sponsoring activity is Naval Ship Systems Command, Program Manager, C. Espeland (Code PMS-385).

The Technical Reviewer for this report was P. L. Bongiovanni (Code TB211).

REVIEWED AND APPROVED: 14 December 1972

W A Von Winkle

W. A. Von Winkle
Director of Science and Technology

Inquiries concerning this report may be addressed to the author,
New London Laboratory, Naval Underwater Systems Center,
New London, Connecticut 06320

NAVAL UNDERWATER SYSTEMS CENTER
HEADQUARTERS
NEWPORT, RHODE ISLAND 02840

NEWPORT, R. I. 02840
AREA CODE 401
841 – EXT.
AUTOVON 948 + EXT.

NEW LONDON, CONN. 06320
AREA CODE 203
442 – 0771 – EXT.
AUTOVON 636 + EXT.

IN REPLY REFER TO:

LA152:WFS:awa
5600
Ser: 71

24 JAN 1973

From: Commanding Officer, Naval Underwater Systems Center
To: Distribution List

Subj: Forwarding of Report

Encl: (1) NUSC Technical Report 4375, "An Adaptive Estimator for Passive Range and Depth Determination of a Maneuvering Target", (U) dated 14 December 1972

1. Enclosure (1) is forwarded for information and retention.

W. F. Saars
W. F. SAARS
By direction

Distribution List
Chief of Naval Operations, OP-095, cy 9
OP-02, cy 10
OP-201, cy 11
OP-203, cy 12
Oceanographer of the Navy, cy 13
Scientific and Technical Information Center, Naval Observatory, Washington, cy 14
Office of Naval Research, cy 15
Chief of Naval Material, MAT 03L, cy 16
MAT 03L4, cy 17
Commander Submarine Development Group TWO, cy 18
Commander Destroyer Development Group, Atlantic, cy 19
Naval Air Development Center, Johnsville, Pa., cy 20
Naval Weapons Center, China Lake, Calif., cy 21
Naval Ship Research and Development Center, Bethesda, Md., cy 22
Naval Coastal Systems Laboratory, Panama City, Fla., 23
Naval Electronics Laboratory Center, San Diego, Calif., cy 24
Naval Electronics Laboratory Center, San Diego, Calif. (Code 3300), cy 25

LA152:WFS:awa
5600
Ser: 71

Distribution List (continued)

Naval Weapons Laboratory, Dahlgren, Va., cy 26
Naval Undersea Center, San Diego, Calif., cy 27
Naval Undersea Center, Pasadena Laboratory, Pasadena, Calif., cy 28
Naval Ordnance Laboratory (J. Faulkner), cy 29
Naval Research Laboratory, Washington, D. C., cy 30
Naval Avionics Facility, Indianapolis, Ind., cy 31
Naval Postgraduate School, Monterey, Calif., cy 32
Defense Documentation Center (DDC), cys 33 thru 44

UNCLASSIFIED

Security Classification

DOCUMENT CONTROL DATA - R & D

(Security classification of title, body of abstract and indexing annotation must be entered when the overall report is classified)

1. ORIGINATING ACTIVITY (Corporate author) Naval Underwater Systems Center Newport, Rhode Island 02840	2a. REPORT SECURITY CLASSIFICATION UNCLASSIFIED 2b. GROUP

3. REPORT TITLE

AN ADAPTIVE ESTIMATOR FOR PASSIVE RANGE AND DEPTH DETERMINATION OF A MANEUVERING TARGET

4. DESCRIPTIVE NOTES (Type of report and inclusive dates)

Research Report

5. AUTHOR(S) (First name, middle initial, last name)

Richard L. Moose

6. REPORT DATE 14 December 1972	7a. TOTAL NO. OF PAGES 34	7b. NO. OF REFS 8
8a. CONTRACT OR GRANT NO. b. PROJECT NO. A-457-00 c. S 3643E-16046 d.	9a. ORIGINATOR'S REPORT NUMBER(S) TR 4375 9b. OTHER REPORT NO(S) (Any other numbers that may be assigned this report)	

10. DISTRIBUTION STATEMENT

Approved for public release; distribution unlimited.

11. SUPPLEMENTARY NOTES	12. SPONSORING MILITARY ACTIVITY Department of the Navy

13. ABSTRACT

This report describes an adaptive state estimator that can significantly improve the passive range and depth determination of a randomly maneuvering target. The target in this study is a submarine, which, while being tracked, performs large-magnitude depth changes at times unknown to the tracking submarine.

Present passive tracking techniques usually utilize a Kalman filter to process the azimuth and/or elevation observations. A Kalman filter will theoretically give the "best" estimates of target range, depth, and velocity when the system and measurement errors can be modeled as Gaussian processes. The main difficulty in using a Kalman filter in passive tracking applications is that large bias errors invariably develop as the target makes large alterations in velocity or depth. A technique for including a feedback-type learning processor in conjunction with the Kalman filter has been found to greatly reduce bias errors produced by the maneuvering target. This error elimination is accomplished with a negligible increase in computer storage and a small increase in computation time. The method is general in nature and can be applied to other types of tracking situations in which a target randomly undergoes large-magnitude changes in motion.

DD FORM 1 NOV 65 1473 (PAGE 1)

S/N 0102-014-6600

UNCLASSIFIED

Security Classification

14. KEY WORDS	LINK A ROLE	LINK A WT	LINK B ROLE	LINK B WT	LINK C ROLE	LINK C WT
Adaptive signal processing						
Learning algorithm						
Maneuvering target						
Kalman estimation						
Passive depth estimation						

ABSTRACT

This report describes an adaptive state estimator that can significantly improve the passive range and depth determination of a randomly maneuvering target. The target in this study is a submarine, which, while being tracked, performs large-magnitude depth changes at times unknown to the tracking submarine.

Present passive tracking techniques usually utilize a Kalman filter to process the azimuth and/or elevation observations. A Kalman filter will theoretically give the "best" estimates of target range, depth, and velocity when the system and measurement errors can be modeled as Gaussian processes. The main difficulty in using a Kalman filter in passive tracking applications is that large bias errors invariably develop as the target makes large alterations in velocity or depth. A technique for including a feedback-type learning processor in conjunction with the Kalman filter has been found to greatly reduce bias errors produced by the maneuvering target. This error elimination is accomplished with a negligible increase in computer storage and a small increase in computation time. The method is general in nature and can be applied to other types of tracking situations in which a target randomly undergoes large-magnitude changes in motion.

TABLE OF CONTENTS

	Page
ABSTRACT	i
LIST OF ILLUSTRATIONS	v
INTRODUCTION	1
KALMAN FILTERING THEORY	4
DERIVATION OF ADAPTIVE ESTIMATOR	8
SIMULATION AND RESULTS	12
CONCLUSIONS	19
LIST OF REFERENCES	21
APPENDIX – SEMI-MARKOVIAN PROCESSES	23

LIST OF ILLUSTRATIONS

Figure		Page
1	Actual and Estimated Depths versus Time for Conventional (Kalman) Filter	2
2	Actual and Estimated Depths versus Time for Adaptive Estimator	3
3	Block Diagram of Kalman Filter	7
4	Block Diagram of Adaptive Filter	12
5	Block Diagram of Adaptive-Estimator System and Simulation	14
6	Actual and Estimated Depths versus Time for Conventional Filter	15
7	Actual and Estimated Depths versus Time for Adaptive Estimator	16
8	Actual and Estimated Ranges versus Time for Conventional Filter	17
9	Actual and Estimated Ranges versus Time for Adaptive Estimator	18
A-1	Diagram of Possible State Transitions for Case II	25

AN ADAPTIVE ESTIMATOR FOR PASSIVE RANGE AND DEPTH DETERMINATION OF A MANEUVERING TARGET

INTRODUCTION

The usual mathematical analysis of a tracking situation consists of describing the target dynamics by a set of state-variable equations that are driven by a zero (or known) mean Gaussian noise process. Knowledge of the state variable $\underline{x}$ would then enable one to compute the position, velocity, course, etc., of the moving target. Unfortunately, not all state variables are directly observable, and those that are usually appear in the argument of an arctangent function. The observation process $\underline{z}(t)$, which is corrupted by additive Gaussian noise, is then operated upon by a Kalman filter to provide the best (minimum mean square) estimate of the state variable $\underline{x}(t)$. From the estimate at time t_k, denoted $\hat{\underline{x}}_k$, the desired target-motion parameters are computed. In addition, $\hat{\underline{x}}_k$ is utilized to form the one-step predicted estimate $\tilde{\underline{x}}_{k+1}$, which facilitates linearization of the next observation $\underline{z}_{k+1}$.

This type of analysis works very well until the target in question makes a significant alteration of course, speed, or, in this specific case, depth. When this occurs, the depth estimate of the Kalman filter becomes very inaccurate because a large bias error develops from faulty knowledge of the new mean value or (unknown) deterministic system input. To illustrate the magnitude of this error, consider the computer-generated curves shown in figure 1. The heavier curve represents the actual (unknown) relative target depth plotted versus time; the lighter curve is the depth estimate of the Kalman filter computed from a measurement of elevation angle. At time k equal 200, the target transits to a new mean depth that is unknown to the tracking submarine. The magnitude of resultant steady-state bias error in the estimate is readily apparent, and it is precisely this error that has been largely eliminated. This is demonstrated by figure 2, which shows the response of the adaptive state estimator operating under identical conditions.

To model the large variations in depth to which a modern submarine can decend, certain discrete depths (states) $d_1, d_2, \ldots, d_n$ are chosen. These n states describe in discrete terms the continuum of an infinite number of possible states. It was found that, due to the pull-in feature of the adaptive filter, n need only be approximately four for a conventionally powered submarine to provide accurate depth estimation at any target depth.

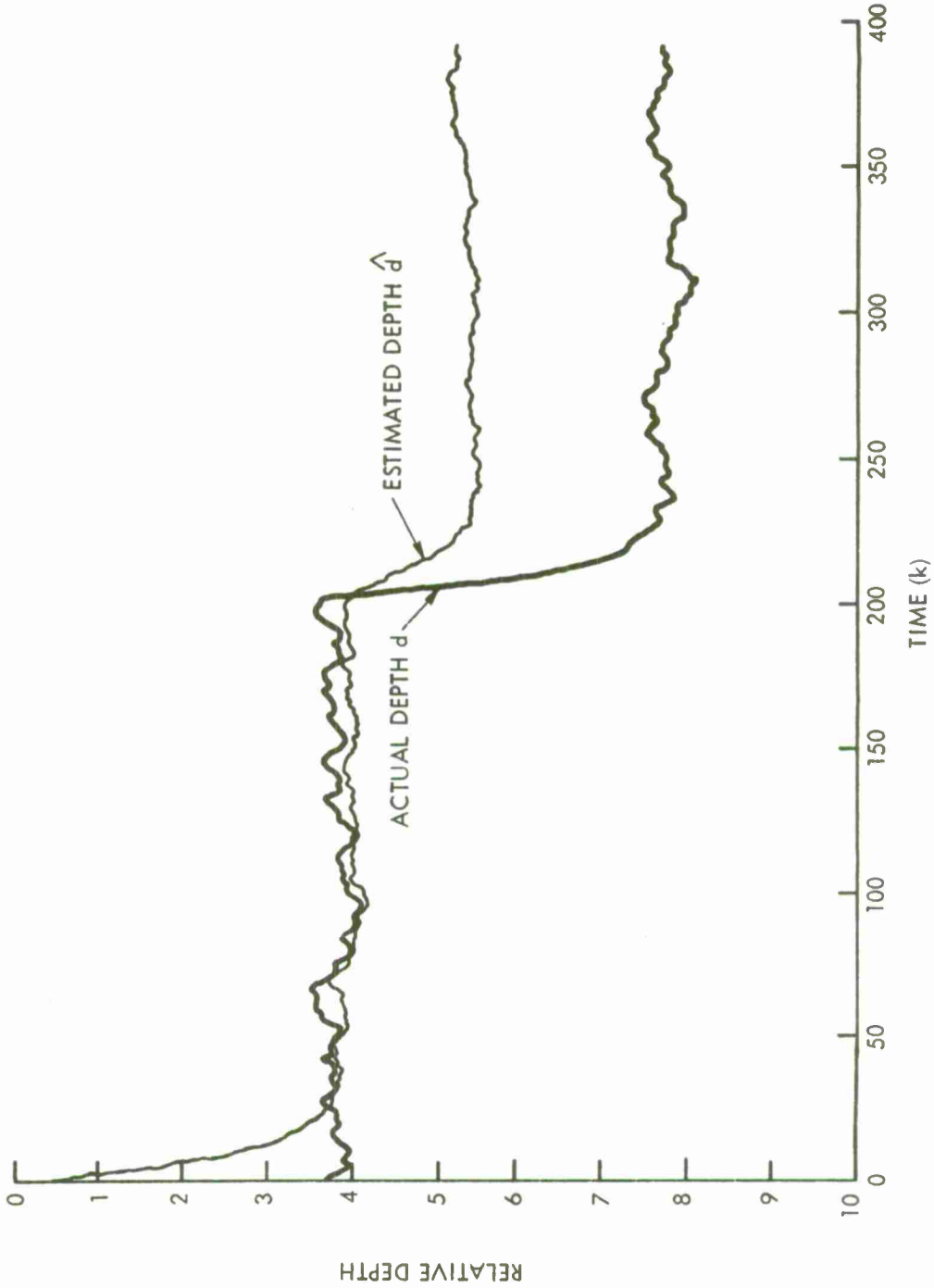

Figure 1. Actual and Estimated Depths versus Time for Conventional (Kalman) Filter

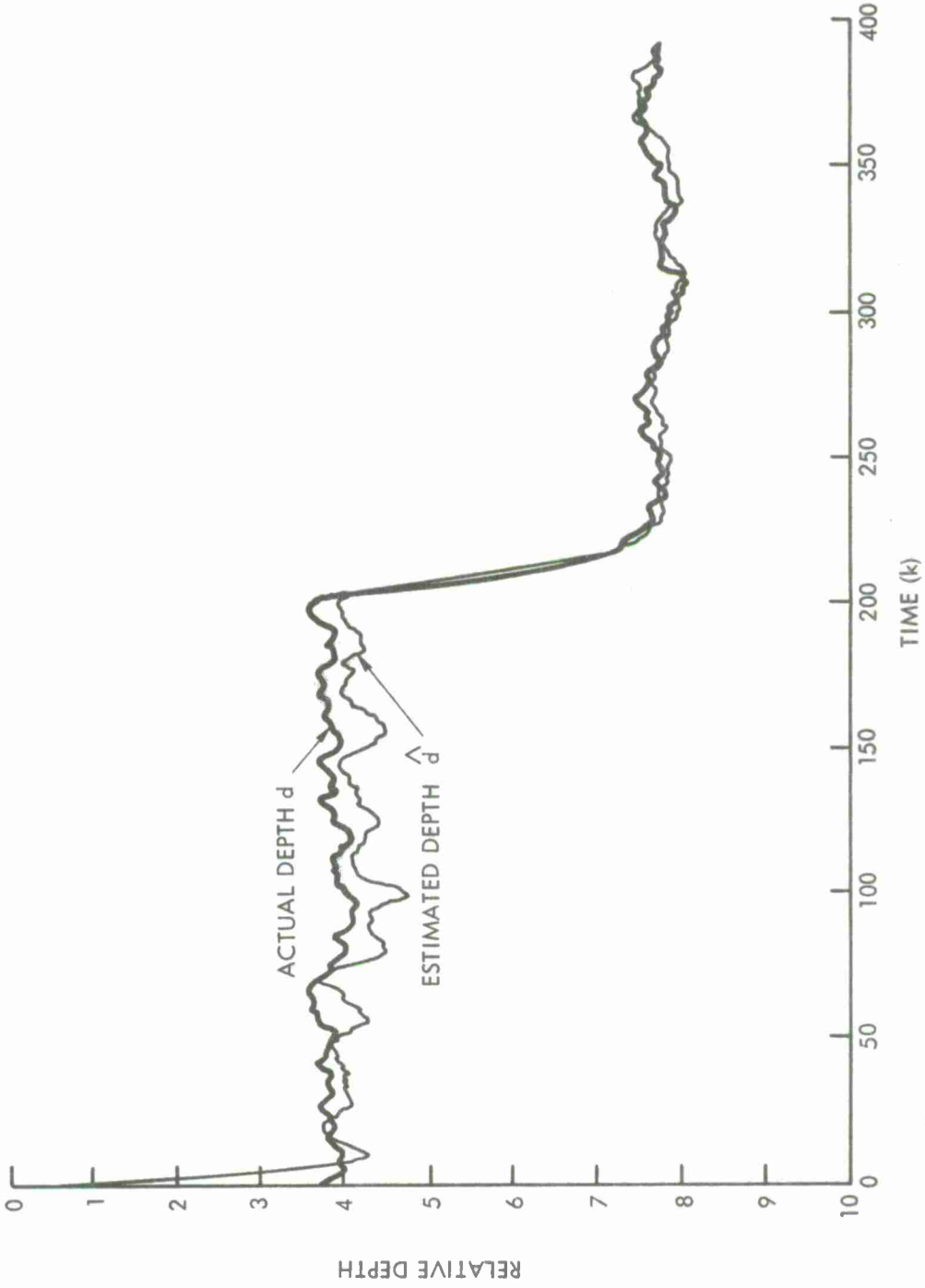

Figure 2. Actual and Estimated Depths versus Time for Adaptive Estimator

To statistically model the maneuvering target, it will be assumed that the n states can be described by a semi-Markovian process. A semi-Markovian process is a probabilistic system that makes its state transitions according to the probability matrix of a Markovian process.[1,2] However, the time spent in state i before the next transition to state k is a random variable governed by density function $h_{ik}(\tau)$. By incorporating the semi-Markovian concept into a Bayesian estimation scheme, an adaptive state estimator was developed that can handle the maneuvering target problem.

Computer simulations have been accomplished with elevation-angle observations only. It is recognized that this is an inadequate approach to the complete tracking-system problem, but it does clearly illustrate the adaptive technique described in this study. To show development of the adaptive filter, a brief review of Kalman filtering theory is presented. Development of the processor equations is then followed by a description of the system simulation and the results obtained. An introduction to the theory of semi-Markovian processes is presented in the appendix.

KALMAN FILTERING THEORY

The basic technique concerns the optimal estimation of a state vector $\underline{x}(t)$ from a noisy set of observation vectors $\underline{z}(t)$ that is related to $\underline{x}(t)$ in some functional manner. For example, the state vector $\underline{x}$ might represent the position and velocity of a satellite and the observation vector $\underline{z}$ the slant range from a ground radar site.

In 1960, Kalman and then Bucy presented a new approach to the state estimation problem.[3,4] Their approach consisted of modeling all random processes by state equations and then working with covariance matrices rather than correlation functions. The reason for adopting this approach was to ease the problem of implementation for online operation of a digital computer. The Kalman-Bucy filter is developed from a pair of differential equations instead of the much more difficult Weiner-Hopf integral equation of the past; it also provides a solution to a much broader class of filtering and estimation problems than could previously be solved.

Since 1961 there have been many alternative derivations of the basic Kalman filter. The Bayesian approach developed by Ho and Lee[5] is, perhaps, the easiest to understand. However, because of the length of the derivation, only the results will be presented. The set of linear, discrete, time-varying state equations

representing the stochastic process (in this application, target motion) is given by system model.

$$\underline{x}_{k+1} = \Phi(k+1, k)\underline{x}_k + \Gamma(k+1, k)\underline{w}_k + \psi(k+1, k)\underline{u}_k \tag{1}$$

and observation model

$$\underline{z}_{k+1} = H(k+1)\,\underline{x}_{k+1} + \underline{v}_{k+1},$$

where $\underline{w}_k$ and $\underline{v}_{k+1}$ represent white Gaussian noise and $\underline{u}_k$ is a deterministic input that, when summed with $\underline{w}_k$, yields a quantity that has a nonzero mean Gaussian distribution. In this report random processes $\underline{w}_k$ and $\underline{v}_{k+1}$ will be considered uncorrelated because it has been shown by many authors that augmenting the state vector $\underline{x}(t)$ by the correlated noise process yields a new (larger dimensioned) set of system and observation equations that can be written with uncorrelated inputs.[6] Notice that the observation process is a linear one, and, in addition, the following a priori probabilistic knowledge is known about the inputs $\underline{w}$ and $\underline{v}$:

$$E\left[\underline{w}_k \ \underline{w}_j^T\right] = Q(k)\delta_{kj}$$

$$E\left[\underline{v}_k \ \underline{v}_j^T\right] = R(k)\delta_{kj}$$

$$E\left[\underline{w}_k \ \underline{v}_k^T\right] = 0. \tag{2}$$

To obtain the optimal estimate $\hat{\underline{x}}_{k+1}$ for state vector $\underline{x}_{k+1}$ (given by equation (1)), the criterion for optimization will be minimization of mean-square error. This results in the conditional mean[6]

$$\min. \left[E(\underline{x}_k - \hat{\underline{x}}_k)^T (\underline{x}_k - \hat{\underline{x}}_k)\right] = E\left[\underline{x}_k \middle| \underline{Z}_k\right] = \hat{\underline{x}}_k. \tag{3}$$

The conditional mean $\hat{\underline{x}}_k \triangleq E[\underline{x}_k|\underline{Z}_k]$ is defined as the expected value of state vector $\underline{x}$ given the data sequence $\underline{Z}_k$ defined by $\underline{z}_1, \underline{z}_2, \ldots, \underline{z}_k$. Practically speaking, the choice of minimization of mean-square error is not nearly as restrictive as it sounds. It is shown by Meditch and others that for any symmetric, convex-upward cost function the best estimator is always the conditional mean.

With this background in mind, when the system and environment are known exactly the design equations for the optimal estimator can be expressed as

$$\hat{\underline{x}}_{k+1} = \Phi\hat{\underline{x}}_k + \psi\underline{u}_k + K_{k+1}(\underline{z}_{k+1} - H\Phi\hat{\underline{x}}_k - H\psi\underline{u}_k) \tag{4}$$

with the auxiliary equation defined by

Kalman gain matrix $\quad K_{k+1} = M_{k+1}H^T(HM_{k+1}H^T + R)^{-1}$

$$M_{k+1} = \Phi P_k \Phi^T + \Gamma Q \Gamma^T$$

Error covariance matrix $P_{k+1} = (I - K_{k+1}H)M_{k+1}$, (5)

where

$$H = H(k+1),$$

$$\Phi = \Phi(k+1, k),$$

$$R = R(k+1),$$

$$Q = Q(k),$$

$$\Gamma = \Gamma(k+1, k).$$

An examination of equation (4) shows that the state estimator $\hat{\underline{x}}_{k+1}$ can be recursively computed by updating the previous state estimate $\hat{\underline{x}}_k$ with a simple summing and multiplying operation. In order to compute $\hat{\underline{x}}_{k+1}$, M_{k+1} is first calculated from the previous value of error covariance matrix P_k; K_{k+1} is then computed, used in solving equation (4), and utilized again in updating P_{k+1} for the beginning of the next cycle.

Figure 3 illustrates the entire Kalman filter. Note that the Kalman gain matrix K_{k+1} is time varying and eventually reaches steady state only for linear time-invariant systems.

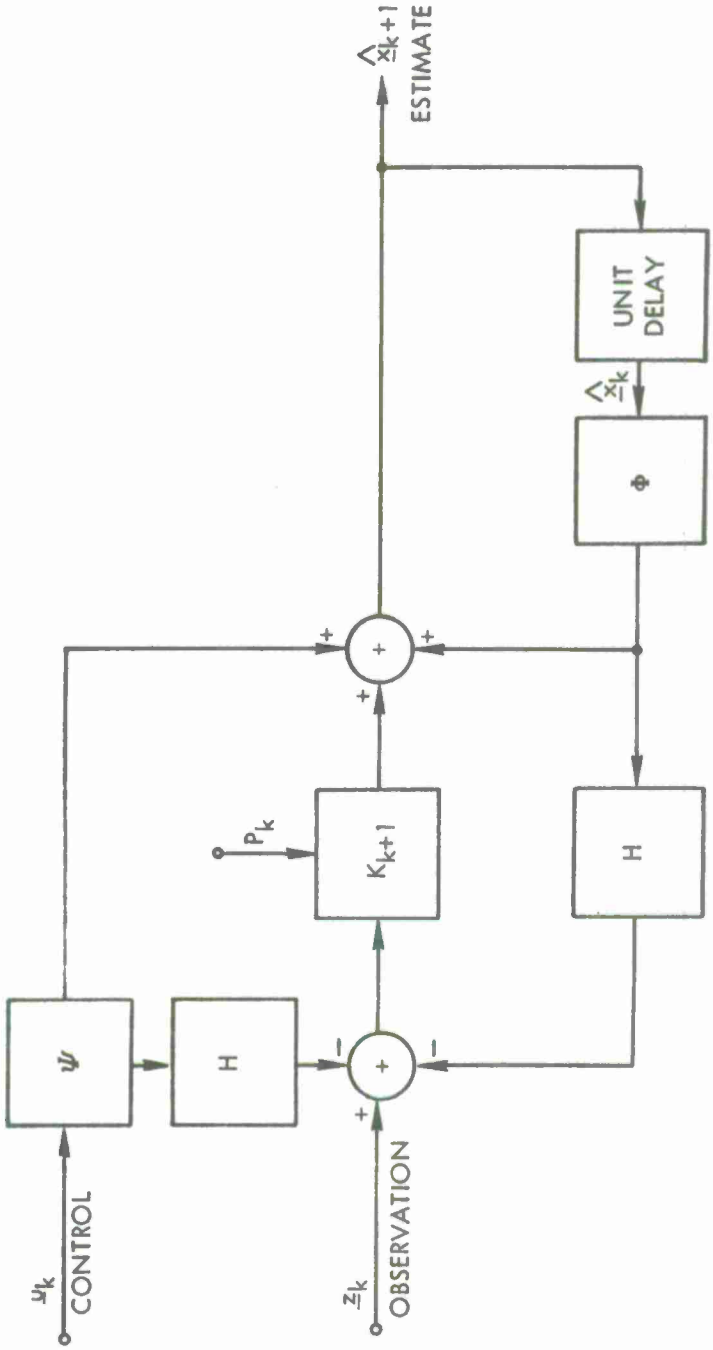

Figure 3. Block Diagram of Kalman Filter

DERIVATION OF ADAPTIVE ESTIMATOR

Consider a target maneuvering in depth. It will have a continuous range in which to choose its next depth; however, because a submarine is approximately 50 ft from keel to sail top and since the adaptive filter has a strong "pull in" power, only a small number n need actually be chosen. Next, the n possible depth increments are defined as states $d_1, d_2, \ldots, d_n$, and the time spent in state d_i before the next transition to state d_j is assumed to be a random variable (τ_{ij}) that is governed by a time density function of the form $h_{ij}(\tau) = Ce^{-C\tau}$. In addition, the probability p_{ij} is defined as the probability that the next transition is to state j given that the last transition was to state i. A good choice would be equally probable (1/n), or p_{ij} could depend upon the tactical situation in which the target and tracking submarine were involved.

Inasmuch as the techniques involved are general, the states of the target are assumed to be $s_1, s_2, \ldots, s_n$, where — depending on the type of analysis desired — s_i could represent an azimuth increment, depth increment, or depth and relative-target-velocity pair. To derive the adaptive estimator, the discrete time form of the condition mean is

$$E[\underline{x}_k | \underline{Z}_k] = \hat{\underline{x}}_k = \sum_{\underline{x}_k} \underline{x}_k p(\underline{x}_k | \underline{Z}_k), \tag{6}$$

where $\underline{Z}_k = \underline{z}_1, \underline{z}_2, \ldots, \underline{z}_k$ represents the data sequence. Defining $p(s_k = s_i | \underline{Z}_k)$ as the probability that the system (target) is in state s_i at time t_k given the data sequence $\underline{Z}_k$, the second term in equation (6) can be expressed

$$p(\underline{x}_k | \underline{Z}_k) = \sum_{i=1}^{n} p(\underline{x}_k | \underline{Z}_k, s_k = s_i)\, p(s_k = s_i | \underline{Z}_k). \tag{7}$$

Combining equations (6) and (7) yields

$$\hat{\underline{x}}_k = \sum_{\underline{x}_k} \sum_{i=1}^{n} \underline{x}_k\, p(\underline{x}_k | \underline{Z}_k, s_k = s_i)\, p(s_k = s_i | \underline{Z}_k),$$

and then interchanging the order of summation gives

$$\left[\begin{array}{l} \hat{\underline{x}}_k = \sum_{i=1}^{n} \hat{\underline{x}}_k(s_i) p(s_k = s_i \mid \underline{Z}_k) \qquad (8a) \\ \text{where} \\ \hat{\underline{x}}_k(s_i) = \sum_{\underline{x}_k} \underline{x}_k p(\underline{x}_k \mid \underline{z}_k, s_k = s_i) \qquad (8b) \end{array}\right] .$$

Equation (8b) represents a conventional Kalman filter whose internal parameters are conditioned on the target being in state s_i. The form of the adaptive filter given by equation (8a) is a bank of n Kalman filters, each multiplied by a time-varying weighting function of yet undetermined form. However, when certain practical assumptions are made, the form of the adaptive filter is greatly simplified.

The basic form was first developed by Magill[7] to solve the problem of the unknown, nonvarying stochastic system. It next appeared in the solution of the Markovian switching-environment problem as formulated by Ackerson and Fu,[8] and later in the random-switching stochastic system problem of Moose and Wang.[2] Upon cursory examination, equation (8a) would appear to be essentially the same as previously reported (by Magill and by Fu); however, there is a major difference, and it lies in the computation of the time-varying weighting functions $p(s_k = s_i \mid \underline{Z}_k)$.

To recursively compute the a posteriori probabilities $p(s_{k+1} = s_i \mid \underline{Z}_{k+1})$, the computational sequence is as follows: first the previously stored value $p(s_k = s_\alpha \mid \underline{Z}_k)$ is updated by a semi-Markovian prediction process to $p(s_{k+1} = s_i \mid \underline{Z}_k)$; then a new measurement is taken, and $p(s_{k+1} = s_i \mid \underline{Z}_{k+1})$ is computed, used in the adaptive filter, and stored to begin the next cycle.

The preceding qualitative procedure can be expressed in mathematical terms by a set of equations in which data sequence $\underline{Z}_{k+1} \triangleq (\underline{Z}_k, \underline{z}_{k+1})$ is utilized. By Bayes rule,

$$p(s_{k+1} = s_i \mid \underline{Z}_{k+1}) = \frac{p(\underline{z}_{k+1} \mid s_{k+1} = s_i, \underline{Z}_k)\, p(s_{k+1} = s_i \mid \underline{Z}_k)}{p(\underline{z}_{k+1} \mid \underline{Z}_k)} . \qquad (9)$$

It has been pointed out that the denominator is common for all weighting terms and can be replaced by a constant. Therefore only the numerator is of interest. It is possible to show that $p(\underline{z}_{k+1} | s_{k+1} = s_i, \underline{Z}_k)$ is approximately normally distributed and can be represented by the known Gaussian density function established from the Kalman filtering algorithms conditioned on s_i — that is, $N\{\underline{H}\Phi(s_i)\hat{\underline{x}}_k(s_i), [\underline{H}\underline{M}_{k+1}(s_i)\underline{H}^T + \underline{R}]\}$, which is just a number when evaluated. Note that the term $p(s_{k+1} = s_i | \underline{Z}_k)$ in expression (9) is the predicted value that will be generated by the semi-Markovian process. Expanding $p(s_{k+1} = s_i | \underline{Z}_k)$ yields

$$p(s_{k+1} = s_i | \underline{Z}_k) = \sum_{\alpha=1}^{n} p(s_{k+1} = s_i | s_k = s_\alpha, \underline{Z}_k)\, p(s_k = s_\alpha | \underline{Z}_k) . \tag{10}$$

The first term of equation (10) is conditioned on both $s_k = s_\alpha$ and data sequence $\underline{Z}_k$. It has been established that $\underline{Z}_k$ and $p(s_k = s_\alpha)$ are strongly dependent; in fact, Z_k actually aids in determining $p(s_k = s_\alpha)$, but, inasmuch as this is already given, $p(s_{k+1} = s_i | s_k = s_\alpha, \underline{Z}_k)$ can be expressed as $p(s_{k+1} = s_i | s_k = s_\alpha)$. The second term $p(s_k = s_\alpha | \underline{Z}_k)$ is known from the previous recursive calculation. Combining equations (9) and (10) yields

$$p(s_{k+1} = s_i | \underline{Z}_{k+1}) = (\text{CONST}) \left[p(\underline{z}_{k+1} | s_{k+1} = s_i, \underline{Z}_k) \sum_{\alpha=1}^{n} p(s_{k+1} = s_i | s_k = s_\alpha) \cdot p(s_k = s_\alpha | \underline{Z}_k) \right] . \tag{11}$$

The only term undefined in equation (11) is $p(s_{k+1} = s_i | s_k = s_\alpha)$; the implication of this conditional probability can be expressed as PR[system is in state (i) at time t_{k+1} | system is in state (α) at time t_k], but this is exactly the same definition given in the appendix as the "random starting" probability $\theta_{\alpha i}(t_{k+1} - t_k)$. Therefore equation (10) can be expressed in its final form as

$$p(s_{k+1} = s_i | \underline{Z}_{k+1}) = (\text{CONST}) \left[p(\underline{z}_{k+1} | s_{k+1} = s_i, \underline{Z}_k) \sum_{\alpha=1}^{n} p(s_k = s_\alpha | \underline{Z}_k) \cdot \theta_{\alpha i}(t_{k+1} - t_k) \right] . \tag{12}$$

Notice that only n terms need be stored from sample to sample.

For uniform sampling, the case of primary concern, $\theta_{\alpha i}(t_{k+1} - t_k) = \theta_{\alpha i}\left[(k+1)T - kT\right] = \theta_{\alpha i}(T)$, which depends only upon the sample spacing T. A good engineering approximation is to let $\theta_{ii} = 0.95$ and $\theta_{ij} = 0.05/n-1$ for $i \neq j$.

One other item needed in the computation of $p(s_{k+1} = s_i \mid \underline{Z}_{k+1})$ is the initial probability of being in state s_i at time zero. It was found that the adaptive filter was relatively insensitive to the choice of initial probabilities. Inasmuch as the adaptive filter rapidly learns the true system configuration, as data are observed, one might choose equally probable a priori estimates with little degradation in performance.

To simplify the optimal adaptive estimator given as equation (8a), assume that the $R(s_i)$ and $Q(s_i)$ covariance matrices are identical. This assumption is not overly restrictive inasmuch as the mean $(\underline{u}_k)$, which is of primary concern, can be any value. With this assumption, the Kalman gain matrices become identical for all n; and it then follows from equations (1) and (8a) that the adaptive estimator can be expressed in its final form as the simplified adaptive estimator

$$\left[\begin{array}{l} \hat{\underline{x}}_{k+1} = \Phi\hat{\underline{x}}_k + \Gamma\hat{\underline{u}}_k + K_{k+1}\left[\underline{z}_{k+1} - H\Phi\hat{\underline{x}}_k - H\Gamma\hat{\underline{u}}_k\right] \\ \text{where} \\ \qquad \hat{\underline{u}}_k = \sum_{i=1}^{n} \underline{u}_k(s_i)\, p(s_{k+1} = s_1 \mid \underline{Z}_{k+1}) \end{array}\right], \tag{13}$$

and $p(s_{k+1} = s_i \mid \underline{Z}_{k+1})$ is given by equation (12) and K_{k+1} = Kalman gain matrix equation (5).

Equation (13) has the form of a single Kalman filter with an external learning feature $\hat{\underline{u}}_k$, which is the estimated (unknown) deterministic target depth command. Figure 4 shows the form of the adaptive filter to estimate the range and depth of a maneuvering target. It is this form of the adaptive filter that will be used in the computer simulations that follow.

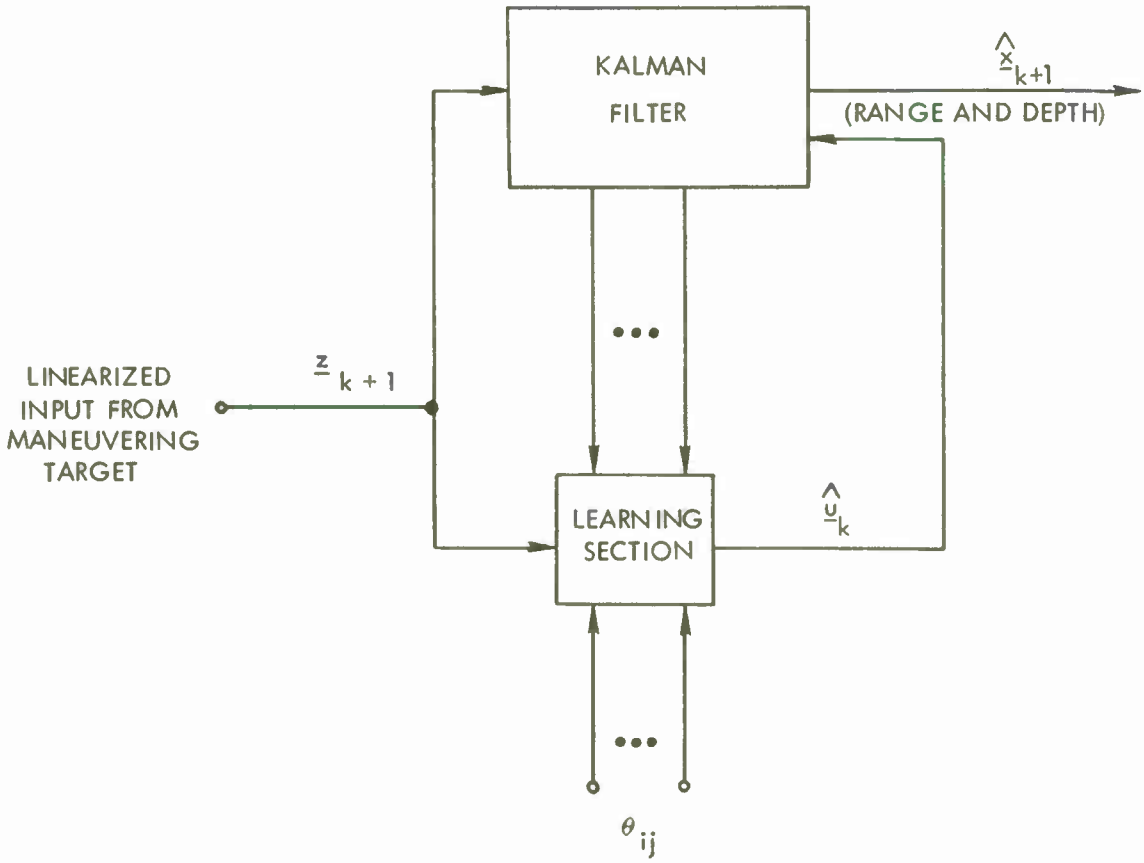

Figure 4. Block Diagram of Adaptive Filter

SIMULATION AND RESULTS

To approximate target motion in the xy plane, a set of two second-order differential equations is written. The system equations are next converted to a set of four state equations, sampled at uniform discrete intervals, and then transformed to the familiar matrix difference equation form

$$\underline{x}_{k+1} = \Phi \underline{x}_k + \Gamma(\underline{w}_k + \underline{u}_k) .$$

The vector $\underline{u}_k$ contains the unknown deterministic (random to the filter) sequence of depth commands, and, in addition, an input is generated to make the relative target range slowly increase with time. The observation process is of the form

$$z^*_{k+1} = \tan^{-1}\left(\frac{x_3}{x_1}\right) + v_{k+1} ,$$

where the magnitude of elevation-angle error v_{k+1} is chosen to represent measured data of a present-day Fleet sonar system. The nonlinear observation process is next linearized by the series expansion of

$$\tan^{-1}\left[\frac{x_3(k+1)}{x_1(k+1)}\right]$$

around the predicted value of the previous estimate $\hat{\underline{x}}_k$ as shown in figure 5. By so doing, the observation process is converted to a linear time-varying measurement vector containing state variables x_1 and x_3 representing, respectively, x and y.

In figure 5, the data-generation process is shown to the left of the broken line, and to the right the adaptive filter is within the dashed line with the linearization process directly below.

In designing the adaptive filter, four depths d_1, d_2, d_3, and d_4 are chosen. To model the inaccurate relative target velocity initially estimated from external sources, a pair of relative opening velocities v_{r1}, v_{r2} is chosen. This leads to a selection of $n = 8$ states where each state s_i is the pair (d_i, v_{ri}). The increase in computation time over that of a conventional Kalman filter was approximately 37 percent, which was determined by noting that the computation time to perform 400 complete cycles on the UNIVAC 1108 was increased from 8 to 11 seconds upon changing from the Kalman to the adaptive filter.

Numerous computer runs were made to compare the performance of range and depth estimation of the conventional (Kalman) filter with that of the adaptive filter. Inasmuch as elevation angle was the only parameter measured, a good estimate of initial range was assumed. Figures 6 and 7 each show the unknown true target depth (heavier curve) and the estimated depth (lighter curve) plotted versus time for conventional and adaptive filters, respectively. An initial depth error was assumed at $k = 0$, and at unknown times $k = 74$ and $k = 280$ the target underwent major depth changes. A comparison of figures 6 and 7 shows that the large bias error is eliminated by the adaptive filter.

The curves shown in figures 8 and 9 illustrate target range versus time for the conventional and adaptive filters, respectively. It is seen that the mean-

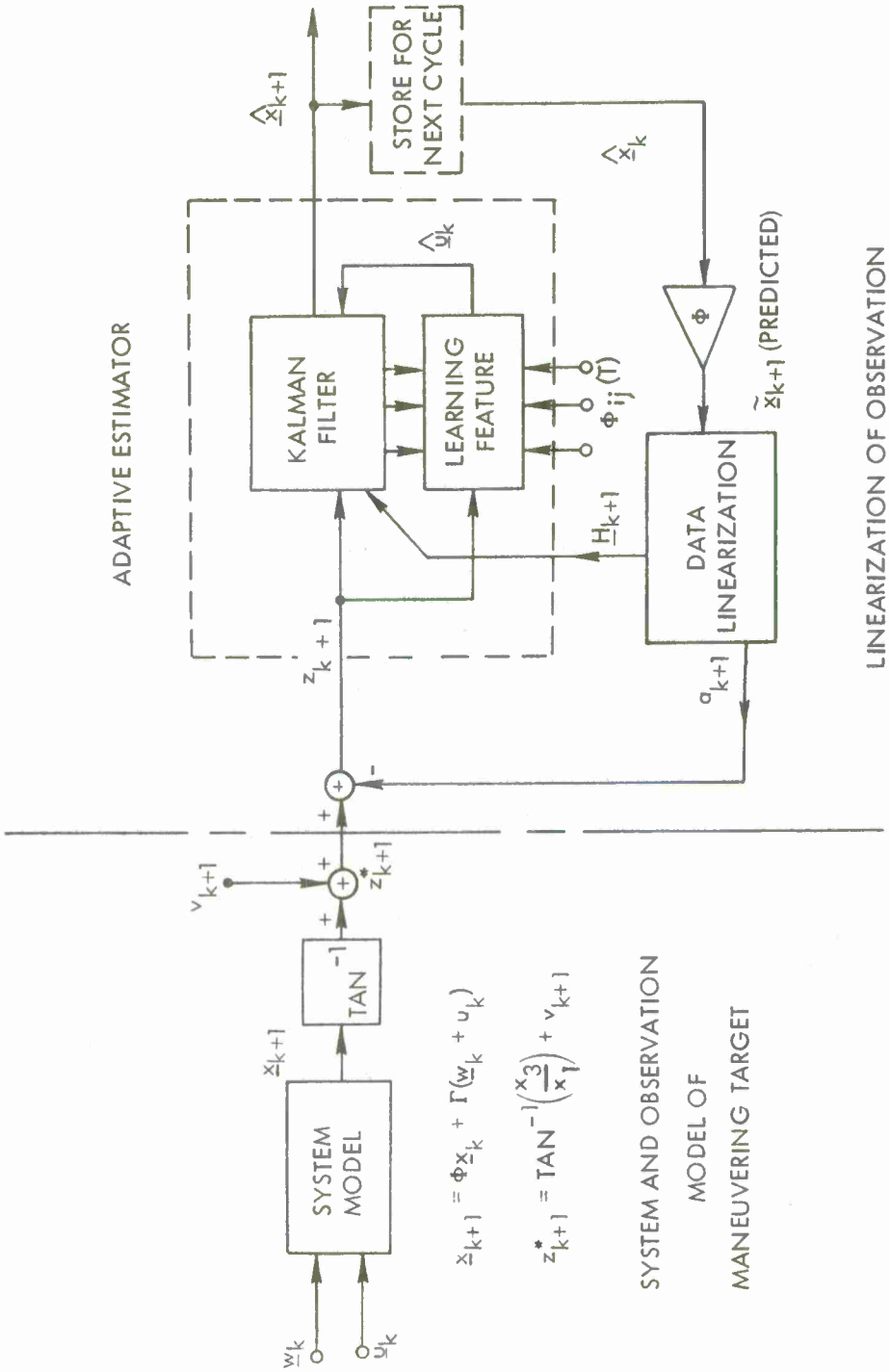

Figure 5. Block Diagram of Adaptive-Estimator System and Simulation

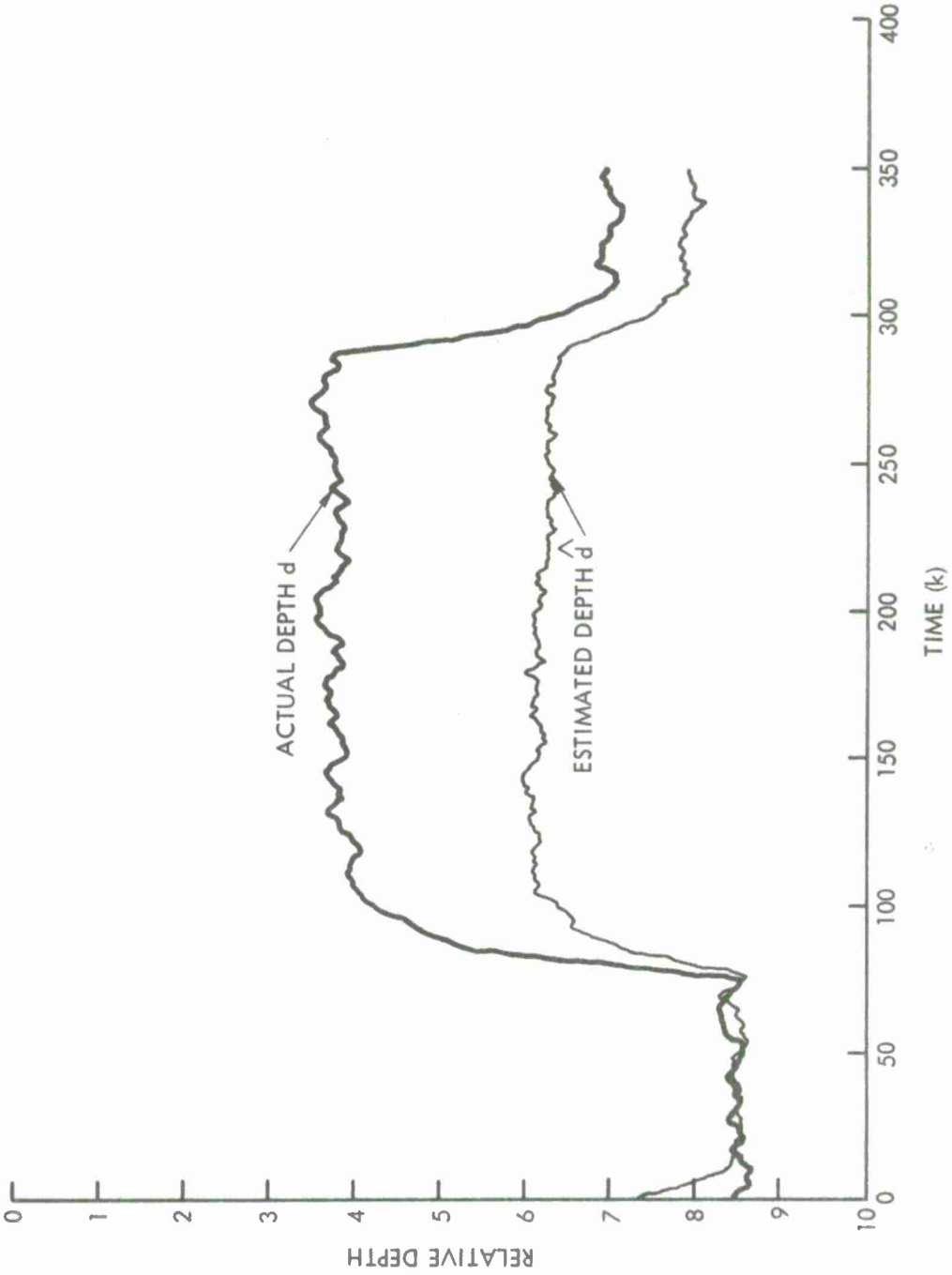

Figure 6. Actual and Estimated Depths versus Time for Conventional Filter

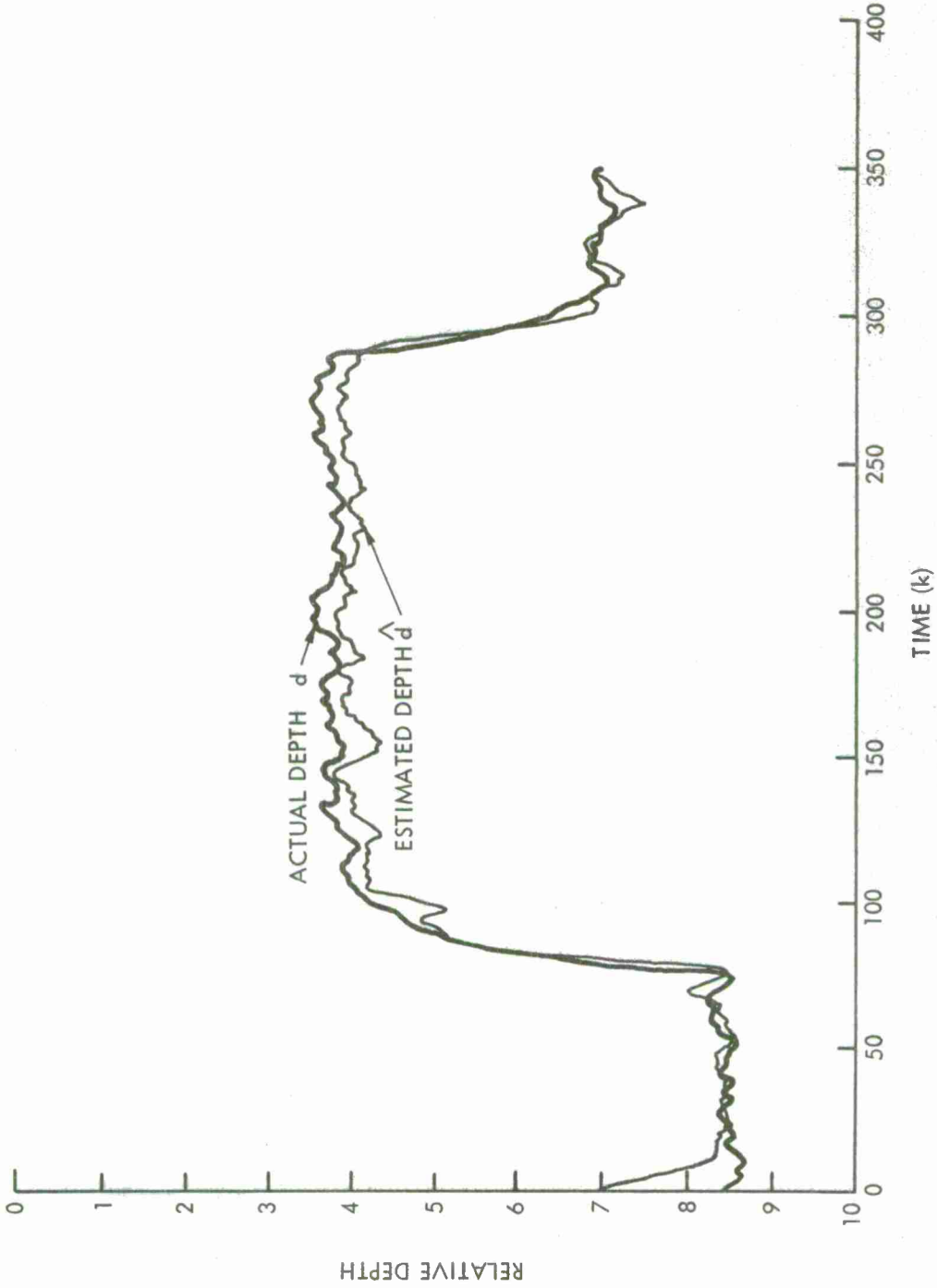

Figure 7. Actual and Estimated Depths versus Time for Adaptive Estimator

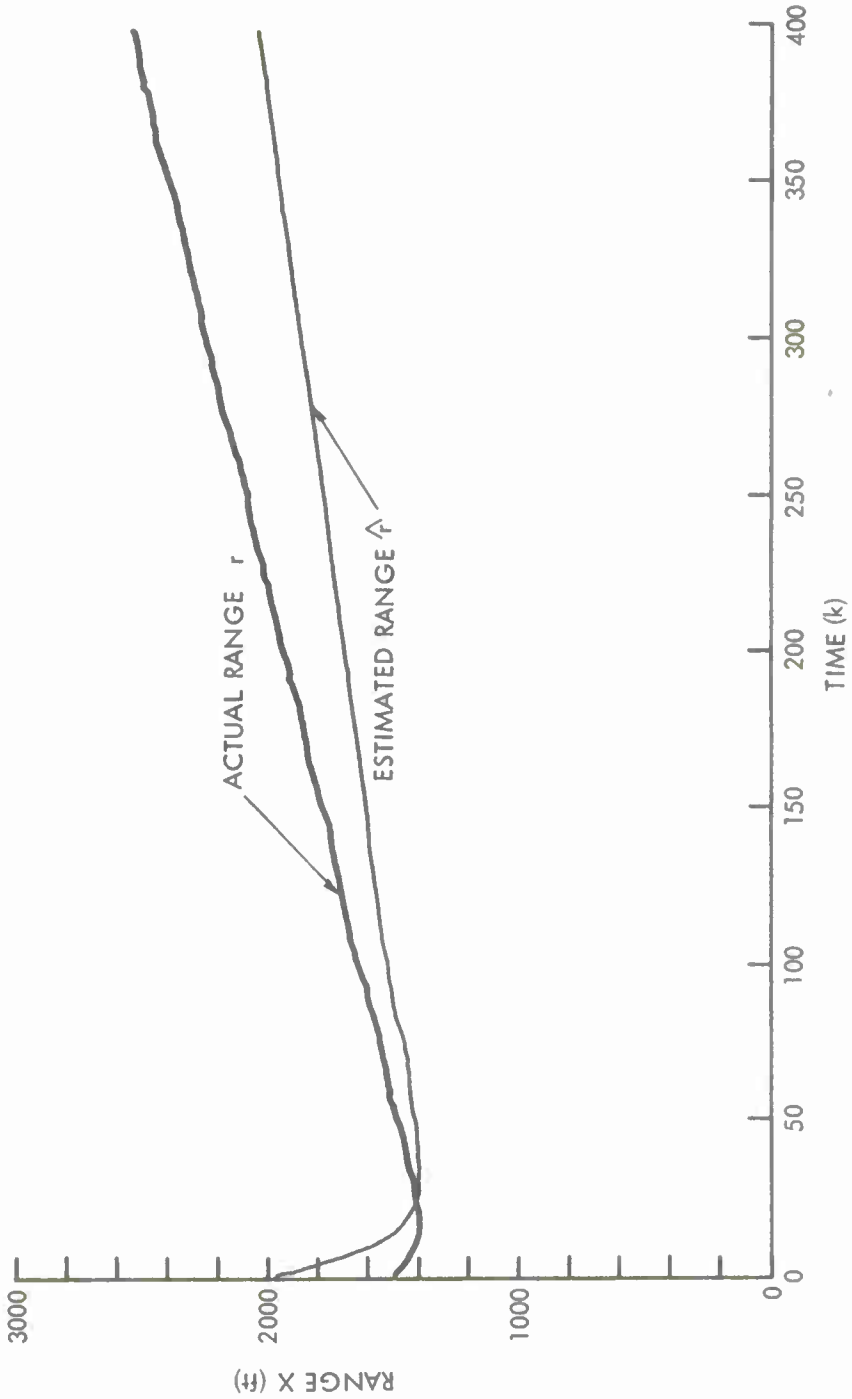

Figure 8. Actual and Estimated Ranges versus Time for Conventional Filter

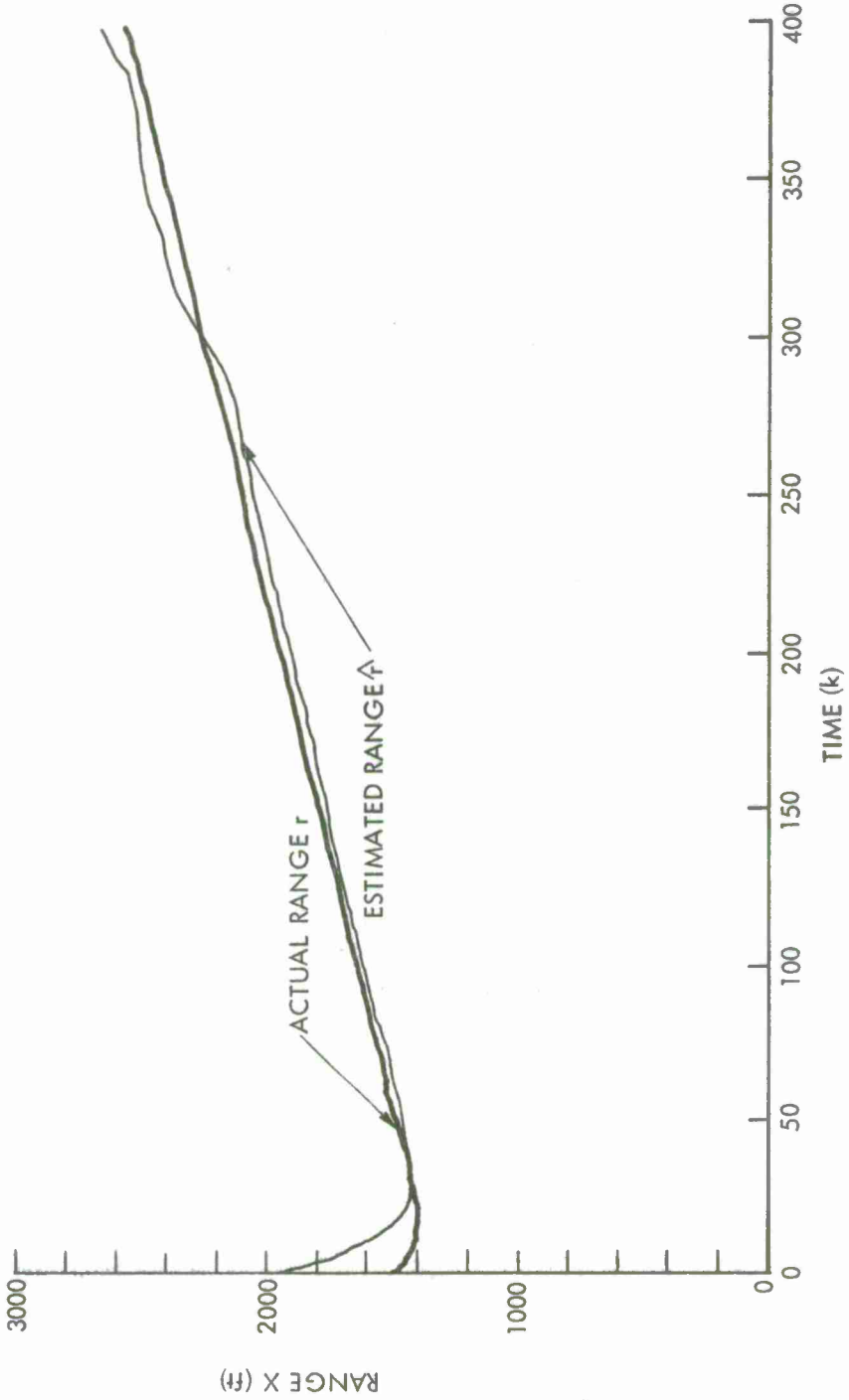

Figure 9. Actual and Estimated Ranges versus Time for Adaptive Estimator

square error of $(r - \hat{r})^2$ steadily increases with increasing time with the conventional filter but remains fairly constant with the adaptive filter. This set of curves illustrates the effect of a faulty knowledge of relative target velocity of the same degree of accuracy as that of present Fleet sonar systems.

CONCLUSIONS

It now appears feasible to statistically model a maneuvering target as a semi-Markovian process and then incorporate the statistics into the design of an adaptive state estimator that consists of a Kalman filter with a learning algorithm connected in a feedback manner. The performance of the adaptive estimator was compared with that of a conventional Kalman filter in estimating the range and depth of a maneuvering target by using only measurements of elevation angle. The simulations show that once a target makes a significant alteration of depth or speed the Kalman filter develops a significant bias error that the adaptive estimator largely eliminates. Bias in the Kalman filter has been shown to arise from imperfect knowledge of the deterministic control vector $\underline{u}_k$, which acts as a mean vector when summed with the Gaussian white-noise system input $\underline{w}_k$.

The superior performance of the adaptive filter was gained at the expense of increased computation time — approximately 35 percent greater than that of the Kalman filter. This disadvantage is minor if a good estimate is desired rather than a bad one. Although range and depth were the target parameters of interest, the processor equations were developed in such a manner that they would apply to other tracking situations as well.

LIST OF REFERENCES

1. R. A. Howard, "System Analysis of Semi-Markov Processes," Institute of Electrical and Electronics Engineers Transactions on Military Electronics, vol. MIL-8, no. 2, April 1964, pp. 114-124.

2. R. L. Moose and P. O. Wang, "An Adaptive Estimator with Learning for a Plant Containing Semi-Markovian Switching Parameters," Proceedings of the Institute of Electrical and Electronics Engineers Conference on Decision and Control, 18 December 1971.

3. R. E. Kalman, "A New Approach to Linear Filtering and Prediction Problems," Journal of Basic Engineering, Transactions of the American Society of Mechanical Engineers, vol. 82, ser. D, no. 1, March 1960, pp. 35-45.

4. R. E. Kalman and R. S. Bucy, "New Results in Linear Filtering and Prediction Theory," Journal of Basic Engineering, Transactions of the American Society of Mechanical Engineers, vol. 83, ser. D, no. 1, March 1961, pp. 95-108.

5. Y. C. Ho and R. C. K. Lee, "A Bayesian Approach to Problems in Stochastic Estimation and Control," Institute of Electrical and Electronics Engineers Transactions on Automatic Control, vol. AC-9, no. 4, October 1964, pp. 333-339.

6. J. S. Meditch, Stochastic Optimal Linear Estimation and Control, McGraw-Hill Book Company, New York, 1969.

7. D. T. Magill, "Optimal Adaptive Estimation of Sampled Stochastic Processes," Institute of Electrical and Electronics Engineers Transactions on Automatic Control, vol. AC-10, October 1965, pp. 434-439.

8. G. A. Ackerson and K. S. Fu, "On State Estimation in Switching Environments," Institute of Electrical and Electronics Engineers Transactions on Automatic Control, vol. AC-15. February 1970, pp. 10-16.

Appendix

SEMI-MARKOVIAN PROCESSES

To fully understand the adaptive state estimator, one must have a basic understanding of semi-Markovian statistics and the manner in which they apply to large-scale dynamic systems containing random switching parameters. The distinguishing feature of a semi-Markovian process is that the time of transition between states is a random variable, and the process is Markovian only at the actual time of transition. This type of process is very general in nature and contains as special cases the discrete and continuous-time Markovian processes.

Much of the summary concerning the semi-Markovian process presented in this appendix was taken from a very fine paper by R. A. Howard that appeared in the Institute of Electrical and Electronics Engineers Transactions on Military Electronics (reference 1 of the basic text). It is precisely because semi-Markovian statistics are so little known, but potentially such a powerful tool, that this appendix is written.

DEFINITION OF TERMS

A semi-Markovian process is a probabilistic system that makes its state (parameter vector or system configuration) transitions according to the transition probability matrix P of a Markovian process. However, the time spent in state i before the next transition to state j is a random variable, and it is this property that distinguishes a semi-Markovian process from a Markovian. The objective is to calculate $\theta_{ij}(t-t_o) \triangleq PR$ [that a system is in state j at time t, given that the system entered state i at time zero]. (For the very important practical case of exponential density functions $h_{ij}(\tau)$, the conditional probabilities $\theta_{ij}(T)$ can be simply computed and then directly incorporated into the adaptive filter.)

In order to do so, begin by establishing the following set of definitions. Let p_{ij} be the conditional probability that the next transition is to state j, given that the last transition was to state i. Define τ_{ij} as a random variable, the time spent in state i, given that the next transition is to j; then let $h_{ij}(\tau)$ be the probability density function governing τ_{ij}. Therefore, to completely specify the semi-Markovian process for an n state switching system, n^2 elements p_{ij} and n^2 elements $h_{ij}(\tau)$ are needed and must satisfy the following conditions:

$$\sum_{j=1}^{n} p_{ij} = 1$$

$$\int_{0}^{\infty} h_{ij}(\tau)\, d\tau = 1 \tag{A-1}$$

$$\tau, p_{ij} \geq 0.$$

With this a priori probabilistic knowledge concerning the switching system, suppose that the process enters state i and chooses as its successor state j, but that an observer does not know the successor chosen. The best one can do to make an estimate of the time τ_i (time spent in state i) is to calculate the weighted average of the holding-time density functions $h_{ij}(\tau)$. Defining $w_i(\tau)$ as the waiting-time density function governing τ_i, this can be expressed

$$w_i(\tau) = \sum_{j=1}^{n} p_{ij}\, h_{ij}(\tau). \tag{A-2}$$

DERIVATION OF CONDITIONAL STATE PROBABILITIES

To proceed with determination of the conditional state probabilities for a semi-Markovian process, define $\theta_{ij}(t)$ as the conditional probability that the system is in state j at time t, given that the system entered state i at time zero. There are two mutually exclusive ways for $\theta_{ij}(t)$ to occur.

Consider the first case, in which $i = j$ and the system has remained in state i for $\tau_i \geq t$. This can be expressed

$$PR[\tau_i \geq t] = \left(\int_{t}^{\infty} w_i(\tau)\, d\tau \right) \delta_{ij}$$

$$\text{Case I} = \left(1 - \int_{0}^{t} w_i(\tau)\, d\tau \right) \delta_{ij}\,, \tag{A-3}$$

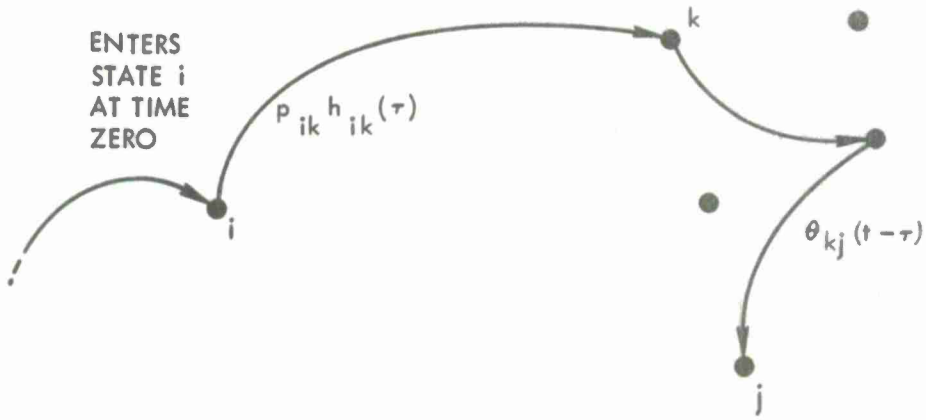

Figure A-1. Diagram of Possible State Transitions for Case II

where δ_{ij}, the Kronecker delta function, ensures that the preceding term only exists for $i = j$.

The second manner, case II, in which $\theta_{ij}(t)$ can occur is for the system to leave i at time τ, go to some intermediate state k, possibly itself, then eventually proceed from state k to final state j in the remaining time $(t - \tau)$. As figure A-1 shows, these two happenings are independent of each other, and therefore the probabilities multiply. Summing over all intermediate states k and integrating over all possible time τ spent in state i yields, for case II,

$$\text{Case II} \triangleq \sum_{k=1}^{n} p_{ik} \int_0^t h_{ik}(\tau)\, \theta_{kj}(t-\tau)\, d\tau. \tag{A-4}$$

When equations (A-3) and (A-4) are combined, the final expression for the conditional state probabilities is given by

$$\theta_{ij}(t) = \left(1 - \int_0^t w_i(\tau)\, d\tau\right) \delta_{ij} + \sum_{k=1}^{n} p_{ik} \int_0^t h_{ik}(\tau)\, \theta_{kj}(t-\tau)\, d\tau. \tag{A-5}$$

Equation (A-5) is an integral equation in θ_{ij}. However, it is easily solved because the last term represents a convolution in the time domain that becomes a

product in the complex frequency domain. Hence, upon taking the Laplace transform,

$$\theta_{ij}(s) = \frac{1}{s}\left(1 - w_i(s)\right)\delta_{ij} + \sum_{k=1}^{n} p_{ik} h_{ik}(s)\, \theta_{kj}(s) \,. \tag{A-6}$$

The algebraic expression given by equation (A-6) is still a very cumbersome form to manipulate. It is possible, however, to express the results in a matrix manner by defining a very special form of matrix multiplication with the symbol denoted by $\circ$. Upon expanding equation (A-6) term by term and regrouping like elements, the following expression can be developed:

$$\left\{\begin{bmatrix} 1 & 0 & \cdots & 0 \\ 0 & 1 & \cdots & 0 \\ & & \cdots & \\ 0 & & \cdots & 1 \end{bmatrix} - \begin{bmatrix} p_{11}h_{11} & \cdots & p_{1n}h_{1n} \\ p_{21}h_{21} & \cdots & p_{2n}h_{2n} \\ & \cdots & \\ p_{n1}h_{n1} & \cdots & p_{nn}h_{nn} \end{bmatrix}\right\} \circ \begin{bmatrix} \theta_{11} & \theta_{12} & \cdots & \theta_{1n} \\ \theta_{21} & & \cdots & \theta_{2n} \\ & & \cdots & \\ \theta_{n1} & & \cdots & \theta_{nn} \end{bmatrix}$$

$$= \frac{1}{s}\begin{bmatrix} (1-w_1) & & & 0 \\ & (1-w_2) & & \\ & & \cdots & \\ 0 & & & (1-w_n) \end{bmatrix} , \tag{A-7}$$

where all matrices are of dimension $n \times n$. Now pause and examine the second term on the left side of equation A-7. Each term c_{ij} is equal to $p_{ij}h_{ij}(s)$; therefore, define the special matrix multiplication $C \triangleq A \circ B$, whereby each element $c_{ij} \triangleq a_{ij}b_{ij}$. With this convention, I being the identity matrix, equation A-7 can be expressed

$$\left[I - P \circ H(s)\right] \Theta(s) = \frac{1}{s}\left[I - W(s)\right] ,$$

which yields the basic transform pair

$$\Theta(s) = \frac{1}{s}\left[I - P \circ H(s)\right]^{-1}\left[I - W(s)\right]$$

$$\Theta(t) = L^{-1}\left[\Theta(s)\right] . \tag{A-8}$$

The matrix $\Theta(t)$ has n^2 elements $\theta_{ij}(t)$, which are exactly the conditional state probabilities that were to be determined. They result when the inverse Laplace transform of each element of the matrix expression $\Theta(s)$ is taken. In order to illustrate equation (A-8) and to derive some meaningful results, an example is presented that includes all of the previous design techniques.

EXAMPLE OF A CONTINUOUS TIME DENSITY FUNCTION

An important example, the results of which will later be incorporated into the simulation of the adaptive filter, is the following: Consider n possible states (system configurations), each having identical exponential density functions $h_{ij}(t) = ae^{-at}$ and an arbitrary transition matrix P containing n^2 elements p_{ij}. It is desired to determine the n^2 conditional state probabilities $\theta_{ij}(t)$. From equation (A-2), for $w_i(s)$,

$$w_i(t) = \sum_{j=1}^{n} p_{ij}\, ae^{-at} = ae^{-at}$$

$$w_i(s) = \int_0^\infty (ae^{-at})e^{-st}\, dt = \frac{a}{s+a} . \tag{A-9}$$

With this information the terms needed in the basic design equation (A-8) can be computed:

$$\frac{1}{s}\left[I - W(s)\right] = \left(\frac{1}{s+a}\right) I \tag{A-10}$$

$$\left[I - P \circ H(s)\right] = I - \left(\frac{a}{s+a}\right) P. \tag{A-11}$$

Upon combining equations (A-8), (A-10), and (A-11), the transform pair of the conditional state probability matrices can be expressed as

$$\Theta(s) = \left[sI + a(I - P)\right]^{-1}$$
$$\Theta(t) = e^{-(I - P)at}. \tag{A-12}$$

Equation (A-12) shows that the case of identically distributed, exponential density functions leads to the important result that $\Theta(t) = \exp(At)$, where the matrix A is given by the known quantity $-a(I - P)$.

INITIAL DISTRIBUTION LIST

Chief of Naval Operations, Op-095
Op-02
Op-201
Op-203
Oceanographer of the Navy
Scientific and Technical Information Center, Naval Observatory, Washington
Office of Naval Research
Naval Ship Systems Command, SHIPS 03
PMS-302
PMS-302-4
PMS-302-41
PMS-302-5
PMS-396-0
PMS-302-A1
Naval Electronic Systems Command, Code 035
Chief of Naval Material, MAT 03L
MAT 03L4
Commander Submarine Development Group TWO
Commander Destroyer Development Group, Atlantic
Naval Air Development Center, Johnsville, Pa.
Naval Weapons Center, China Lake, Calif.
Naval Ship Research and Development Center, Bethesda, Md.
Naval Coastal Systems Laboratory, Panama City, Fla.
Naval Electronics Laboratory Center, San Diego, Calif.
Naval Weapons Laboratory, Dahlgren, Va.
Naval Undersea Center, San Diego, Calif.
Naval Undersea Center, Pasadena Laboratory, Pasadena, Calif.
Naval Ordnance Laboratory
Naval Research Laboratory, Washington, D. C.
Naval Avionics Facility, Indianapolis, Ind.
Naval Postgraduate School, Monterey, Calif.
Defense Documentation Center (DDC)

U1503