AD-753 987

A PRELIMINARY STUDY OF MAXIMAL CONTROL FORCE CAPABILITY OF FEMALE PILOTS

A. Howard Hasbrook, et al

Civil Aeromedical Institute
Oklahoma City, Oklahoma

July 1972

DISTRIBUTED BY:

NTIS

National Technical Information Service
U. S. DEPARTMENT OF COMMERCE
5285 Port Royal Road, Springfield Va. 22151

Best
Available
Copy

FAA-AM-72-27

AD753987

A PRELIMINARY STUDY OF MAXIMAL CONTROL FORCE CAPABILITY OF FEMALE PILOTS

Bonne Karim, M.S.*
Karl H. Bergey, M.S.*
Richard F. Chandler, B.S.M.E.**
A. Howard Hasbrook**
Jerry L. Purswell, Ph.D.*
Clyde C. Snow, Ph.D.**

*Department of Industrial Engineering
The University of Oklahoma
Norman, Oklahoma 73069

**FAA Civil Aeromedical Institute
P.O. Box 25082
Oklahoma City, Oklahoma 73125

DDC
RECEIVED
JAN 22 1973
E

July 1972

Availability is unlimited. Document may be released to the National Technical Information Service, Springfield, Virginia 22151, for sale to the public.

Prepared for
DEPARTMENT OF TRANSPORTATION
FEDERAL AVIATION ADMINISTRATION
Office of Aviation Medicine
Washington, D.C. 20591

Reproduced by
NATIONAL TECHNICAL
INFORMATION SERVICE
U S Department of Commerce
Springfield VA 22151

The contents of this report reflect the views of the FAA Civil Aeromedical Institute which is responsible for the facts and accuracy of the data presented herein. The contents do not necessarily reflect the official views or policy of the Department of Transportation. This report does not constitute a standard, specification or regulation.

TECHNICAL REPORT STANDARD TITLE PAGE

1. Report No. FAA-AM-72-27	2. Government Accession No.	3. Recipient's Catalog No.
4. Title and Subtitle A PRELIMINARY STUDY OF MAXIMAL CONTROL FORCE CAPABILITY OF FEMALE PILOTS		5. Report Date July 1972
		6. Performing Organization Code
7. Author(s) Bonne Karim, M.S., Karl H. Bergey, M.S., Richard F. Chandler, B.S.M.E., A. Howard Hasbrook, Jerry L. Purswell, Ph.D., Clyde C. Snow. Ph.D.		8. Performing Organization Report No.
9. Performing Organization Name and Address FAA Civil Aeromedical Institute P. O. Box 25082 Oklahoma City, Oklahoma 73125		10. Work Unit No.
		11. Contract or Grant No.
12. Sponsoring Agency Name and Address Office of Aviation Medicine Federal Aviation Administration 800 Independence Avenue, S. W. Washington, D. C. 20591		13. Type of Report and Period Covered OAM Report
		14. Sponsoring Agency Code

15. Supplementary Notes

Work was performed under Task No. AM-A-72-PRS-52.

16. Abstract

The growing number of female pilots entering the field of civil aviation has suggested the need for a study of the maximum allowable forces which should be specified for operating aircraft controls. Therefore, a study was made of the maximal voluntary forces which a sample of 25 female pilots could exert on each flight control. Further, the percent of maximal strength versus endurance relationship reported by other investigators was studied for this population in operating each control. The percent of maximal strength versus endurance relationship was established and compared with the results of other investigators. The results obtained indicate a need for further study of the subject in simulated and actual flight.

17. Key Words Female pilots, Civil aviation, Control forces, Aircraft design	18. Distribution Statement Availability is unlimited. Document may be released to the National Technical Information Service, Springfield, Virginia 22151, for sale to the public.

19. Security Classif. (of this report)	20. Security Classif. (of this page)	21. No. of Pages	22. Price
Unclassified	Unclassified	17	$3.00

Form DOT F 1700.7 (8-69)

A PRELIMINARY STUDY OF MAXIMAL CONTROL FORCE CAPABILITY OF FEMALE PILOTS

I. Introduction.

During flight the pilot of a light aircraft experiences a number of different conditions under which he must apply forces to the aircraft controls. In some instances an application of force for only a few seconds is necessary to perform a maneuver or to bring the aircraft under control. In others it may be necessary for the pilot to exert forces over an extended period of several minutes in order to maintain control of the aircraft. These forces may be exerted on one control alone or on various combinations of controls simultaneously. At certain times they may be small while in other situations applications of very large forces which are close to the limits of the pilot's maximal strength may be required.

The present regulation specifying control force limits for the type of light aircraft flown by general aviation pilots is given in Part 23, Subpart B, Section 23.143, of the Federal Aviation Regulations (FAR 23.143). This regulation uses the words "temporary" and "prolonged" to designate between the two time periods of force application, but does not specifically define them. Furthermore, the regulation does not state whether one or two hands are to be used on the controls to maintain the specified forces. Some critical flight situations require the use of only one hand on the controls. No information is available concerning the origin of the control force limits specified by this regulation, thus we cannot judge their validity with respect to the physical capacity of the general aviation pilot population or a realistic flight situation.

Previous studies by VanOosterom (1959) have shown that a pilot's ability to exert force on an aircraft control decreases with the amount of time he is required to maintain that force. As mentioned above, in some instances a pilot is required to exert force for only a few seconds while in others force must be exerted for several minutes, thus properly defined time limits for force application are essential to the specification of maximum allowable control forces. In a recent study, Paul (1970) interpreted "temporary" to mean less than 15 seconds and "prolonged" to mean a period "which is long, several minutes, in comparison to a temporary, several seconds period." In the present study "temporary" forces were measured in terms of each subject's maximal effort on any given control. "Prolonged" forces were measured by having the subject maintain several predetermined levels of force for as long as possible. These levels of force were approximately 25%, 50% and 75% of each subject's maximum for any given control axis.

Because of the lack of clarity of one or two hand use and length of time for "temporary" and "prolonged" force application in the present regulations, a need was expressed to develop a program of strength tests which would accurately measure the strength capabilities of a pilot in flight. Preliminary in-flight studies were conducted by Paul (1970) using women pilots as subjects. These studies seemed to indicate that the forces specified by FAR 23.143 might be excessive for some women pilots, as well as possibly for some male pilots over age 35. In addition, Paul compared FAR 23.143 with two similar regulations, the British Civil Airworthiness Regulation, BCAR K2-6 3.4, and the U.S. Military Regulation, MIL-F-8785 B, "Flying Qualities for Piloted Airplanes," and found that the control forces specified in FAR 23.143 are generally higher than those specified by these other regulations. In particular, the control forces specified by BCAR K2-6 3.4 and MIL-F-8785 B are substantially lower than those specified by FAR 23.143 for aileron and elevator. Rudder forces are approximately equal for the three regulations.

Recognition of possible inadequacies in the present standards for pilot control forces, espe-

cially when it is noted that 12,000 female pilots are now licensed, led to a joint study of pilot control forces by the University of Oklahoma and the Civil Aeromedical Institute of the Federal Aviation Administration. The study in its entirety is covered in a Master's thesis by Karim (1971). This OAM Report provides a condensation of that study.

A. *Review of Previous Research.* The need for a study of the strength capabilities of pilots with respect to aircraft controls has been recognized for many years. However, little work has been done in this field with the objective of producing results which could be used to specify maximum control force limits for general aviation aircraft.

Early studies were concerned primarily with testing the effects of different variables on a pilot's maximal force exertion on aircraft controls. Hertel (1930) investigated arm strength for push and pull on stick controls, using 12 "athletic pilots and engineers" in a ground-based aircraft cockpit. Measurements were taken with both hands, with each hand alone and with or without a restraining harness. An attempt was made to study the influence of fatigue on a pilot's performance, but measurements of force magnitude over a period of time were inaccurate. Two additional studies were made by the National Advisory Committee for Aeronautics in the 1930's, both using two male test pilots and a ground-based cockpit mock-up. Gough and Beard (1936) investigated the effect of control position relative to the pilot's seat and attitude of the aircraft on the maximal forces exerted by subjects on stick and rudder controls. Measurements were taken for the right hand and right foot only with the subjects restricted by a heavy aerobatic harness; they concluded that the results of the test were not valid for actual flight conditions because the accelerating forces normally encountered in actual flight for the attitudes studied did not exist in this ground-based test. McAvoy (1937) made a similar study, looking at the effects of wheel position relative to the seat, wheel size, hand grip on wheel and use of a restraining harness, on a pilot's ability to exert force on a control wheel. The results of both these studies were not applicable to any general pilot population since only two subjects were used. They did establish optimal control positions for maximal force exertion but told nothing about the amount of force a reasonable percentage of pilots should be expected to exert.

A second series of tests was begun by the National Aeronautical Research Institute (NLL) in Amsterdam in the early 1940's. The objectives of this program were to test a statistically valid sample of the pilot population and to achieve reliable measurements for the magnitude of forces exerted. This work is summarized in a report of a 1958 NLL study by VanOosterom (1959). VanOosterom measured optimal control positions for maximal force exertion and maximal force exertion over four different time intervals, using 27 civilian and military pilots strapped into a cockpit model. Measurements were made for the right hand only.

Only two sources were found (other than regulations currently in use) which actually recommend specific control forces that a certain percentage of pilots can be expected to maintain. Morgan and Thomas (1945) included a table giving data for the "greatest all-out effort the average pilot is capable of exerting with both hands for a very short while," "the maximum force we can demand of him for a short while with one or both hands," and the "greatest force he cares to exert for a short while with one or both hands." The paper states that these data were drawn from flight tests of a wide variety of airplanes; however, no information on these tests is available. We know nothing about the physical characteristics of this "average pilot" or the exact length of the time mentioned for force exertion.

A study by Watt (1963) of the RCAF Institute of Aviation Medicine, Toronto, recommends control force limits supposedly applicable to 90% of the American adult male population; however, no justification is given for this figure. Watt studied the push-pull forces exerted on a control column by 20 male subjects strapped into a pilot's seat mock-up. Measurements were taken for both hands and each hand alone. No data are given for rudder controls.

It is evident that no accurate conclusions can be made from the above studies about the physical capabilities of pilots in the exertion of force on aircraft controls because the samples used were not representative of any general pilot population and accurate measurements of force exerted

were not made under conditions simulating actual flight.

Extensive research has been conducted in the past to determine the relationship between percentage of maximal static strength and endurance for force exertions involving different muscle groups. Kroemer (1970) cites E. A. Mueller's experiments during the 1930's as initiating the original idea of a maximal strength-strength endurance relationship. Elbel (1949) investigated the relationship between leg endurance and the force applied to a pedal, while Tuttle, Janey and Thompson (1950) measured grip-strength. A decade later Rohmert (1960) performed similar experiments, measuring endurance at various levels of maximum response strength for different muscle groups. In every case it was found that, despite individual differences in maximum strength, relative loading eliminated any differences in endurance among subjects. More recently, Caldwell (1964) studied this relationship for a manual pull on an isometric dynamometer handle and again found that, with relative loading, individual differences in endurance were unrelated to differences in maximal strength. Similar work has also been done on the relative-load-endurance relationship by Molbech (1963) and Monod and Scherrer (1967).

Kroemer (1970) reported that the relationship between relative strength and strength endurance had been definitely established by the work of Elbel, Caldwell, Rohmert and others. This relationship is shown in Figure 1.

The many variables which enter into a study of this nature, as demonstrated by the initial in-flight pilot study, made it necessary to develop a systematic research program with increasing levels of sophistication. This study was the initial step employing a static, ground-based

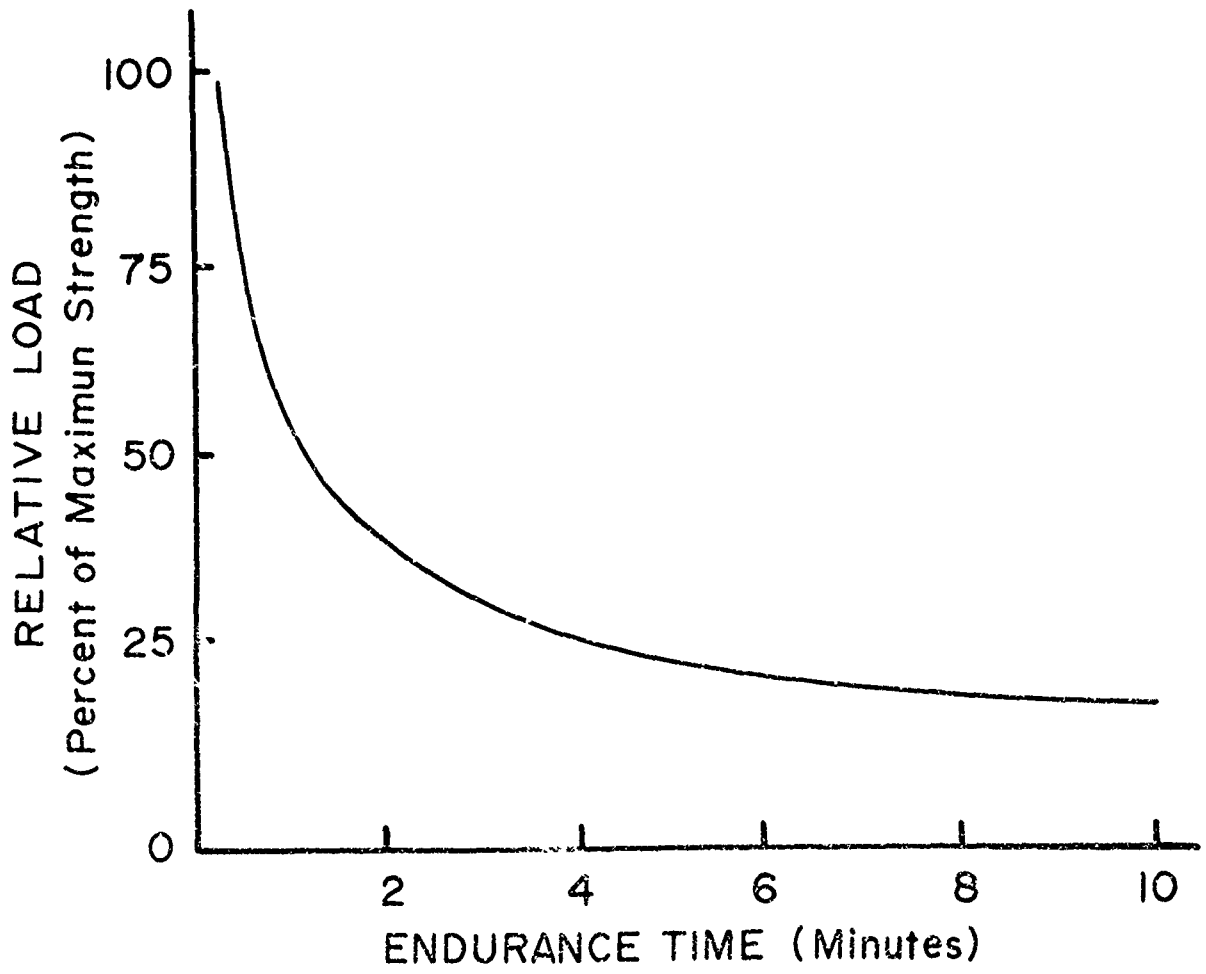

FIGURE 1.—Plot of Relative Load as a Percent of Maximal Strength Versus Endurance Time in Minutes.

cockpit simulator. This study is to be followed by studies in a ground-based simulator with full motion capabilities, and ultimately an in-flight test program.

In the present study an attempt has been made to investigate the problem in terms of maximal strength and strength versus endurance with the objective of not only defining the strength capabilities of the female pilot population but also of confirming the load-endurance relationship for this type of task. Once this relationship is established, further studies of the pilot strength problem would be greatly simplified because it would only be necessary to measure maximal strength for a given maneuver in any particular aircraft. Endurance times would be calculated directly from the relative load-endurance curve and thus the test program would be simplified considerably.

II. Method.

Maximal voluntary strength (in pounds) and strength versus endurance (in seconds) for the operation of rudder, elevator and aileron controls were assessed.

In measuring the forces, it was necessary to decide whether the elevator and aileron forces would be measured for one hand or both hands on the control wheel. After due consideration, it was decided that the usual pilot routine of operating the wheel with one hand would be used as the task, since the other hand would be used in operating other controls for many emergency situations where control force is a consideration.

The maximal static effort, usually called a maximal voluntary contraction (MVC) in the literature, was measured for the types of control movement specified in Table 1, where the limb used is also shown. Measurement of force levels for both the right and left arms for elevator push allowed a comparison of strengths to be made for the two limbs. The trials for strength versus endurance and the force levels chosen are shown in Table 2.

TABLE 1.—Measures of Maximal Voluntary Effort Obtained

Control Movement	*Limb Used*
Elevator push	Right and left arm separately
Elevator pull	Left arm
Right aileron	Left arm
Left aileron	Left arm
Right rudder	Right leg
Left rudder	Left leg

TABLE 2.—Measures of Strength Versus Endurance Obtained

Control Movement	*Force Levels-lbs*	*Limb Used*
Elevator push	15	Right arm
	30	
	45	
Left rudder	35	Left leg
	70	
	105	
Left aileron	10	Left arm
	15	
	25	

For the first phase of the experiment, the measurement of maximum strength was accomplished. Each of the subjects was tested on all control axes, and the order of presentation was randomized according to the following scheme. The series of controls to be tested involved four tests using the left arm, one test using the right arm and one test for each leg. The order of testing was randomized separately for the trials using the arm and the two leg trials. The leg tests were then interspersed between the left arm tests in the following patterns and the patterns were alternated for successive subjects.

Pattern 1: Arm, Arm, Leg, Arm, Leg, Arm

Pattern 2: Arm, Leg, Arm, Leg, Arm, Arm

Using this scheme, no more than two left arm tests in succession were required. The measurement for the right arm was made after the other maximal strength tests had been completed for each subject. No rest period was allowed between these tests, other than the time it took to reset the equipment for the next trial (less than one minute). Kroemer (1970) states that fatigue is not a problem for maximal strength exertions of less than ten seconds in duration and maximal strength in these tests was exerted for less than ten seconds in all cases.

For the endurance trials subjects were presented three levels of force to maintain for each of three control axes. The nine experimental conditions were randomized for each subject. During this phase of the experiment a five minute rest period was allowed between each trial. Astrand and Rodahl (1970) report that for steady-state work of moderate intensity this recovery period is adequate for most people.

A. *Cockpit Model.* A wooden box frame constructed of ¾″ plywood was used for the cockpit model. The box was fastened to a 4′ by 8′ base of ¾″ particle board for added stability during the tests. A drawing of the cockpit frame is shown in Figure 2.

The pilot's seat was constructed of ¾″ plywood covered with a 2″ thickness of foam rubber padding. Dimensions of the seat were chosen

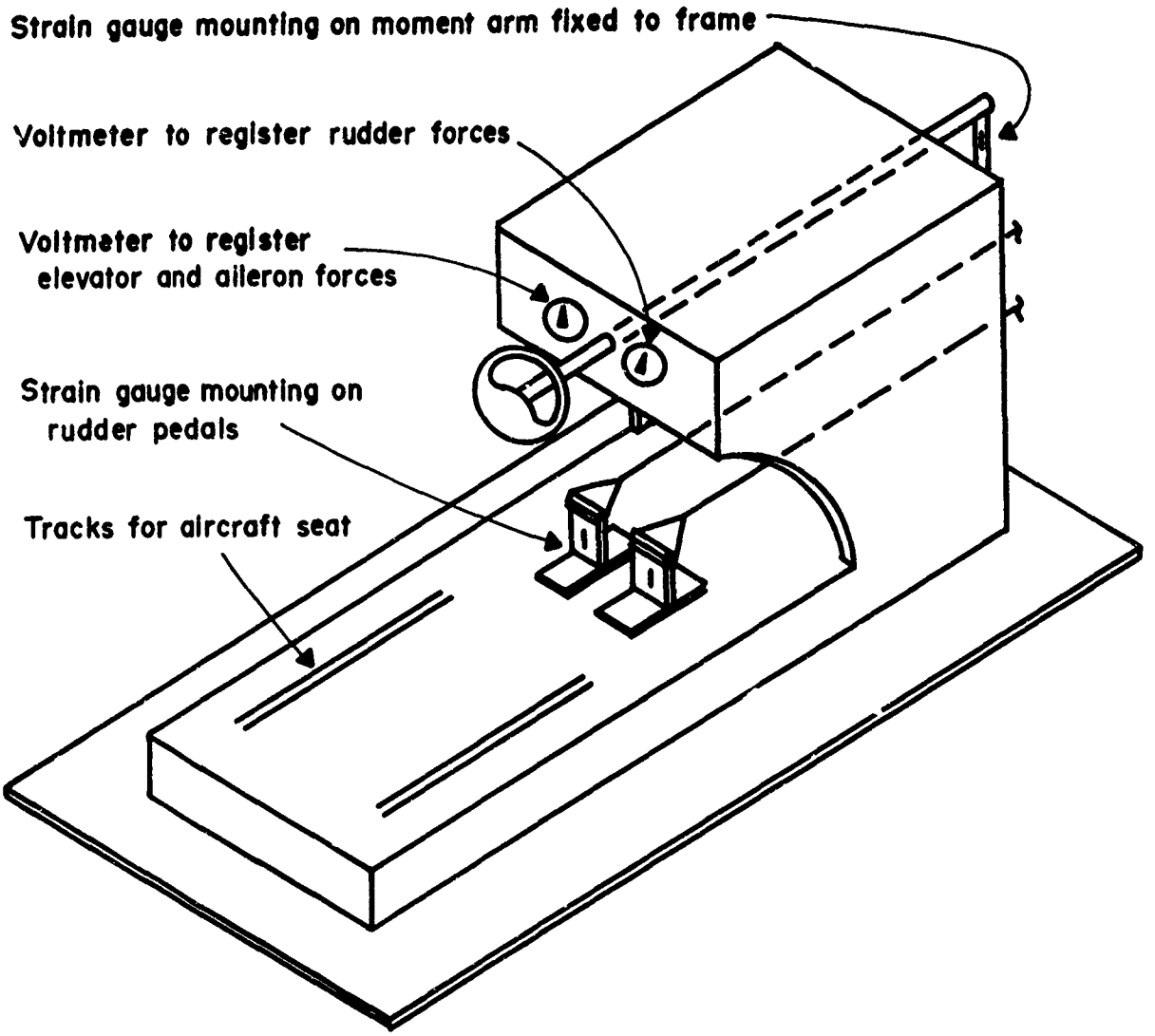

FIGURE 2.—View of Cockpit Simulator Used for Strength Tests.

to conform with those of a standard aircraft seat. The seat was bolted to a steel base fitted with rollers, and mounted on standard aircraft tracks fastened to the floor of the box frame. Six horizontal position adjustments in 1″ increments were provided, with a distance of 18″ between the leading edge of the seat and the rudder plates with the seat in the foremost position. This distance was chosen to correspond with that generally found in light aircraft.

A standard aluminum aircraft control wheel of 10″ diameter was used. Since subjects had trouble maintaining a proper grip on the wheel, a layer of masking tape was added to the point

of grip midway during the experiment. The wheel was pinned to a control column which, in turn, was fastened to a moment arm at the far end of the frame. The moment arm provided a mounting for the strain gauges used to measure aileron and rudder forces. The wheel was aligned in the neutral position during all tests and was essentially immobile, although the elasticity of the measuring system permitted some slight deflection.

Two 6″ x 3⅞″ x ¼″ steel plates, welded vertically to horizontal 10″ x 5″ x ½″ steel base plates, were bolted to the floor to serve as rudder pedals. Strain gauges mounted on the plates were used to measure force levels. A 1″ steel pipe mounted 1¼″ from the top of each plate was used as the point of force application. Again, only static loading conditions were studied and the two rudder pedals were immobile. With this type of pedal arrangement it was only possible to measure components of force normal to the pedal surface. However, with the type of pedal arrangement in an actual aircraft, the only effective force on the pedal is still that which is normal to the pedal surface.

B. *Monitoring Equipment.* In order to conduct the endurance testing, it was necessary to provide a visual display for the subjects' reference in maintaining the required force level. This system was an addition to the usual chart recording system and bridge circuits employed for recording strain gauge data.

The visual display consisted of two voltmeters connected in parallel with the chart recorder. The subject was required to exert a given level of force on a specified control axis by neutralizing a preset deflection on the appropriate meter. The correct amount of deflection corresponding to the desired force was determined prior to each trial using the calibration system described under Accessory Equipment. The meters were attached to the cockpit frame as shown in Figure 2. The left meter moved up and down registering elevator forces, while the right meter moved right or left registering aileron or rudder forces, depending upon which force was being measured. This design was chosen so the direction of movement of the meter pointers would be consistent with that of the equivalent aircraft instruments. Each meter face was marked with a center point and a linear scale. A third meter, also connected in parallel with the chart recorder was attached to the physiograph for use by the experimenter. This meter was used for reference when determining the amount of deflection required for a given level of force and for setting this deflection on the subject's meter.

C. *Accessory Equipment.* A winch was mounted on a wooden platform with a height adjustment provided to place it in line with either the elevator or rudder controls. A spring scale was then attached between the winch line and the appropriate control. The scale was attached directly to the end of the control column for calibrating elevator forces and to cables connected to the rudder pedals for calibrating these forces. This arrangement enabled the experimenter to exert force on the desired control by means of the winch and to read the force being applied on the scale.

The spring scale was calibrated along its full range using known lead weights and was found to be accurate within one pound. Calibration was performed before the test program, midway during the program and at the end of the program. Calibration for elevator and rudder controls was accomplished by matching deflections on the recording paper with deflection made by applying known forces with the winch-scale arrangement described above.

Calibration for the aileron force was performed prior to each test session by clamping a moment arm to the control wheel and then placing known lead weights on the beam. A twenty inch moment arm was used, with a weight of x pounds at this distance being equated to 4x pounds at the rim of the wheel. A range of 0–40 pounds was used for aileron calibration with readings made on the recording paper for every five pound increment of force.

A standard set of Gneupel measuring equipment was used for the various anthropometric measurements.

D. *Subjects.* Previous anthropometric studies have shown that strength is dependent on age, sex, height and body type. Hunsicker and Greey (1957) report that body build is closely related to strength. Asmussen has extended this study to women in general, and reports that, after correction for gross body size, women are, on the

average, 77% as strong as men. Since this figure is also supported by several other studies, a sample population consisting of women pilots was chosen for this test.

The Aeromedical Certification Branch of the Federal Aviation Administration has available data on age, height and weight for all active airmen. The overall pilot population and the female pilot population were defined in terms of these parameters, and an attempt was made to secure a stratified sample of subjects to fit the desired population as closely as possible for each of the parameters. Age, height and weight statistics for the test subjects are listed in Table 3.

TABLE 3.—Anthropometric Data for Test Subjects

Subject No.	Age (yrs)	Height (cm)	Weight (lbs)	Upper Arm (cm)	Lower Arm (cm)	Upper Leg (cm)	Lower Leg (cm)
4	28	167.6	110	27.5	20.2	46.5	39.4
6	44	172.7	144	32.4	25.8	52.8	41.3
7	20	165.1	110	28.7	22.7	46.0	40.6
8	18	160.0	123	32.0	18.1	36.1	39.4
9	28	177.8	140	34.1	24.8	51.3	45.7
10	41	167.7	190	30.4	22.8	46.2	43.2
11	54	152.4	98	27.8	22.6	48.3	38.1
12	24	162.5	138	28.4	24.7	43.7	40.6
13	58	162.5	142	33.6	18.2	44.0	43.2
14	36	172.7	150	33.0	22.3	45.8	44.5
15	48	160.0	130	30.4	19.1	42.0	40.0
16	28	162.5	115	33.1	17.8	43.2	41.9
17	23	175.3	150	30.6	24.8	48.9	43.8
18	47	162.5	110	28.6	18.3	44.7	38.7
19	18	167.6	107	30.6	24.5	50.0	44.5
20	31	165.1	140	30.2	20.2	43.2	42.5
21	33	167.6	134	28.9	21.1	46.3	41.9
22	39	170.2	145	29.1	22.7	42.3	42.5
23	39	175.3	150	31.8	24.0	47.7	46.4
24	55	162.5	150	32.8	19.6	45.1	43.2
25	27	167.6	130	31.3	21.9	46.6	42.5
26	27	165.1	114	31.0	22.5	48.0	43.2
27	39	161.3	112	30.2	22.7	44.7	41.9
28	34	160.0	120	30.8	22.6	43.9	40.6
29	47	157.5	143	28.5	19.6	41.5	38.7

E. *Experimental Routine.* Each experimental session was conducted between the hours of 9:00 a.m. and 5:00 p.m. and lasted from one and one-half to two hours. Upon arrival, the subject completed a personal data sheet and then was seated in the pilot's chair. She was then asked to adjust the seat to her normal flying position and to fasten the safety belt. The purpose of the experiment was explained and standard instructions were given for control operation and to motivate subjects to perform at their highest level.

The six trials were then administered in the random order previously described. Subjects were repeatedly asked the question, "Can you do any better?" during the maximal strength tests.

The procedure for the endurance tests was explained during a five minute rest period and then these tests began. After explaining the voltmeter operation for monitoring force level, the subject was told to push on the elevator with her right hand, applying just enough force to recenter the pointer and then to hold the pointer steadily on center for a moment before releasing the control. The subject then received standard instructions which emphasized that the force level was to be maintained for as long as possible.

During each trial the subject was engaged in a running conversation in order to keep her

TABLE 4.—Maximal Static Contractions for Three Aircraft Controls

Subject No.	Elevator Push (lbs) L. Hand	Elevator Push (lbs) R. Hand	Elevator Pull (lbs)	Rudder Right (lbs)	Rudder Left (lbs)	Aileron Right (lbs)	Aileron Left (lbs)
4	67	74	72	126	175	30	24
6	59	65	56	178	150	42	30
7	69	88	71	160	170	27	34
8	66	50	50	130	120	26	28
9	69	63	63	192	137	30	30
10	84	70	87	198	150	..	38
11	28	45	60	81	105	30	35
12	67	63	70	200	190	37	35
13	60	50	80	195	158	28	25
14	77	77	59	169	136	39	26
15	49	70	72	250	153	35	30
16	122	106	89	220	275	30	32
17	72	72	65	230	178	31	31
18	46	66	78	134	136	34	30
19	68	68	69	148	105	25	32
20	64	66	94	171	184	37	19
21	73	76	82	165	275	28	26
22	74	90	98	225	230	38	30
23	74	91	47	120	225	39	41
24	69	78	80	225	215	36	30
25	81	110	80	164	250	29	30
26	88	68	60	160	275	36	45
27	70	59	59	150	168	23	23
28	69	57	57	225	182	26	20
29	66	104	104	230	182	42	29

mind off the arm or leg in use. Subjects were told how previous subjects had done on this trial and also how they were performing. An attempt was made to instill some spirit of competition among them in order to increase their motivation to apply force to the control as long as possible.

During rest periods the subject was free to move about, smoke, and have coffee or a coke. Anthropometric data was also taken during these periods and further discussion of the experiment took place in order to interest the subjects and increase their motivation.

III. Results and Discussion.

A. *Distribution of Maximal Strength Data.* The maximal strength data for the test subjects is listed in Table 4. Mean maximal forces, standard deviations and ranges are given in Table 5. The distribution of data was found to follow a normal distribution for each control, using the Kalmogoroff-Smirnof test.

TABLE 5.—Means, Standard Deviations, Maximum, Minimum and Range of Maximal Control Forces

Control Axis	*Mean* Max. Force (lbs)	Standard Dev. (lbs)	Maximum (lbs)	Minimum (lbs)	Range (lbs)
Elevator Push (Left Hand)	69	17	122	28	94
Elevator Push (Right Hand)	73	18	110	36	74
Elevator Pull	72	15	104	47	57
Right Rudder	177	43	250	81	169
Left Rudder	178	48	275	96	179
Right Aileron	33	6	42	23	19
Left Aileron	30	6	45	19	26

The wide range of strength capabilities can be attributed in part to the inherent strength characteristics of the subjects, but a variation in strength was also observed as a function of seat position.

Past experiments in the field of maximal strength measurement have generally been designed so that all subjects were seated in the same position relative to the point of force application. Such a design required that the angles at the subject's elbow and knee be kept constant at certain predetermined values. The seat position was adjusted to achieve these angles, rather than testing in the subject's preferred position. Since the present study was conducted to predict the actual strength capabilities of a pilot in flight, it was decided to allow each subject to adjust the seat to the position in which she normally flies. This design placed every subject in a different position relative to the controls and thus gave the subjects different strength capabilities in terms of the biomechanics of force exertion. In light of this fact, the maximal strength data represents the strength capabilities of female pilots in the posture in which they normally fly and not what they might be able to do in any given optimal or minimal posture.

The results of this study indicate that push strength increases as the elbow angle increases for the positions tested. This result agrees with Caldwell (1964), who found that an elbow angle between 135 and 160 degrees provided optimal strength capabilities in arm extension against an isometric dynamometer handle. Gough and Beard (1936) and others have also found that elevator push strength increases with increasing distance between the elevator control and the pilot's seat.

While it might seem that a recommendation should be made for seating pilots so that the desired elbow angle is achieved, this study demonstartes that other problems arise. All the test subjects adjusted their seat position relative to the wheel so that they could achieve full rudder control, if possible. Since most general aviation aircraft have fixed rudder pedals, the elbow angle is determined by this seating position to achieve rudder control. Some subjects were also found to fly regularly with a pillow behind their back in order to reach the rudder control, since most general aviation aircraft do not provide an adequate range of adjustment even when the elbow angle is compromised.

No information is available reporting the optimal elbow angle for maximal aileron strength; however, Damon (1966) states that an elbow angle of 90 degrees is most favorable for the exertion of torque on a wheel control. Elbel (1949) measured maximal leg strength capabilities for the exertion of force on aircraft rudder pedals and used knee angles between 106 and 116 degrees and foot angles between 55 and 65 degrees for his subjects. His assumption that angles in these ranges were optimal was based on extensive consultation with heavy bomber pilots. More recently, Dupuis, Preuschen and Schulte (1955) reported a knee angle of approximately 150 degrees as optimal for the exertion of force on a pedal control.

Since the elbow and knee angles for force application were not controlled, but allowed to vary with the subject's preference, a correlation analysis as reported in the next section was performed to investigate their relationship to maximal strength.

Maximal strength measurements for elevator push were taken for both the left and right hands and provide for an interesting comparison of data. The mean maximal strength for the left hand was 69 pounds with a standard deviation of 17 pounds, while the mean right hand push strength was 73 pounds with a standard deviation of 18 pounds. Since one subject was not right handed, the slightly higher value for the right hand push agrees with Hunsicker's (1957) statement that right-handed subjects are slightly stronger with the right hand than with the left.

The rudder forces which were recorded for both the left and right leg also provide an interesting comparison of data. The mean maximal left rudder force was 178 pounds with a standard deviation of 48 pounds, while the mean force for right rudder was 177 pounds with a standard deviation of 43 pounds. This similarity between strength capabilities for the left and right legs supports Watt's (1963) contention that there is no difference in leg strength between the two legs.

The mean maximal force for right aileron was slightly greater than that for left aileron due to the biomechanics of the movement. When

turning a wheel to the right with the left hand, the arm is free to be fully abduced, while a turn of the wheel to the left with the left hand allows no room for arm abduction since the arm is already at the subject's side.

The review of maximal control forces allowed by current regulations indicates that elevator and aileron levels allowed are higher than 50 percent of the subjects could attain, while the allowed force levels for rudder could be attained by all but six subjects.

B. *Correlation Analyses.* (1) Maximal Strength Data. The correlation of maximal strength data with the set of anthropometric parameters is shown in Table 6. No significant correlations were obtained for the personal variables of age and height on any control axis. A significant negative correlation (r=−0.52) was obtained for weight versus maximal strength on left aileron, and was not correlated significantly with forces on any other control axis.

TABLE 6.—Correlation Coefficients for Maximal Strength Versus Seven Anthropmetric Parameters

Parameter	Maximum Push Right Hand	Maximum Left Rudder	Maximun Left Aileron
Age	−0.273	−0.102	−0.161
Height	0.279	0.186	0.016
Weight	0.096	0.153	0.519**
Elbow Angle	0.342*	------	−0.170
Knee Angle	------	0.412**	------
Foot Angle	------	0.192	------
Seat Back Ht as % of Shoulder Ht	−0.125	−0.377*	−0.405

*Significant at 10% level for > 0.338

**Significant at 5% level for > 0.398

A significant correlation (r=0.34) was obtained between elbow angle and maximal elevator push, indicating better performance at the larger angles (135–160 degrees). Knee angle also correlated significantly (r=0.41) with maximal strength on left rudder.

The correlation between elbow angle and maximal strength was significant (r=0.34) for elevator push, but was insignificant for left aileron.

Knee angles from 89 degrees to 119 degrees were measured for the test subjects and these angles are in the range of increasing force capability for leg extension given by Dupuis Preuschen and Shulte (1955). The correlation between foot angle and maximal left rudder strength was insignificant.

(2) Endurance Data. The data from the endurance trials is presented in Tables 7, 8, and 9 for elevator push, left rudder and left aileron respectively. The tables give the time in seconds that each level of force was maintained and the percentage of each subject's maximal force measured on the specified control represented by this level of force. For example, referring to Table 7, subject number four held a 15 pound elevator push for 247 seconds. Her maximum right-handed push is listed in Table 4 as 74 pounds, so the 15 pound force represented 20% of this subject's maximum for elevator push. Likewise she held 30 pounds (40% of maximum) for 65 seconds and 45 pounds (61% of maximum) for 14 seconds.

A strength endurance index was computed for each subject and each experimental condition

TABLE 7.—Strength Endurance Data for Elevator Push

	15 lb.		30 lb.		45 lb.	
Subj. No.	Time (sec)	% Max.	Time (sec)	% Max.	Time (sec)	% Max.
4	247	20	65	40	14	61
6	300	34	120	51	85	68
7	145	17	60	34	18	51
8	213	30	28	60	21	90
9	300	24	136	48	30	72
10	300	21	163	42	63	63
11	239	33	58	67	17	99
12	166	24	15	48	17	72
13	126	30	90	60	54	90
14	300	19	135	39	43	58
15	300	21	64	43	25	64
16	300	14	300	28	103	42
17	300	21	187	42	78	63
18	169	23	22	46	29	68
19	193	22	62	44	38	66
20	300	23	70	44	61	66
21	300	20	59	39	3	59
22	300	17	107	33	61	50
23	300	16	190	33	51	49
24	300	19	105	38	61	58
25	300	14	120	27	59	41
26	205	22	67	44	60	66
27	117	27	73	54	39	80
28	103	15	94	29	10	44
29	300	21	61	42	11	63

TABLE 8.—Strength Endurance Data for Left Rudder

Subj. No.	35 lb. Time (sec)	35 lb. % Max.	70 lb. Time (sec)	70 lb. % Max.	105 lb. Time (sec)	105 lb. % Max.
4	235	20	62	40	30	60
6	300	27	145	47	107	60
7	300	21	90	41	27	62
8	300	29	110	58	43	87
9	300	26	100	51	25	77
10	300	23	300	46	254	70
11	300	33	300	67	141	99
12	300	18	127	37	95	55
13	300	22	300	44	105	66
14	300	25	300	51	41	77
15	300	23	208	46	66	69
16	300	17	300	34	300	53
17	300	20	264	39	176	59
18	300	26	218	52	112	78
19	300	33	300	67	3	99
20	300	19	300	38	85	57
21	300	13	300	25	82	38
22	300	15	78	30	161	46
23	300	16	192	31	105	47
24	300	16	300	33	300	49
25	300	14	151	28	196	42
26	300	13	300	25	99	38
27	300	21	184	42	70	61
28	300	19	108	38	47	58
29	300	19	300	38	300	58

for use in the correlation analysis. This index was equal to the product of endurance time in seconds and the relative load (percent of each subject's maximum) represented by the level of force maintained in each experimental condition. Again referring to Table 7, the strength endurance index for subject number four for a 15 pound elevator push would be 247 multiplied by 0.20, or 49.4. Likewise the index for a 30 pound push would be 65 multiplied by 0.40 or, 26.0. Correlation coefficients were then computed for the strength endurance index versus the anthropometric parameters of age, height, weight, elbow angle, knee angle and foot angle. In addition, another parameter called seat-back height was correlated. The results of this analysis are presented in Table 10. This parameter is computed by expressing seat-back height as a percentage of seated shoulder height.

Both weight and seat-back height were significantly correlated with endurance for the 15 pound elevator push. For the 30 pound push, height, weight and seat-back height all correlated significantly with endurance. The significance of seat-back height can probably be explained by considering this parameter as a measure of the torso support provided the subject during the endurance trial. Only weight correlated significantly with endurance at the 45 pound level of force.

The endurance index for left rudder did not correlate significantly with any of the anthropometric parameters except age ($r=0.51$) and weight ($r=0.37$) at the 70 pound of rudder force.

The endurance index for left aileron correlated significantly ($r=-0.48$) with elbow angle for a 10 pound aileron force. The data indicate that subjects with smaller elbow angles were capable of greater left aileron endurance at this level of force than those with large elbow angles. Correlations with other variables were significant at this level of force as were all correlations at the 15 pound left aileron force. The only significant correlation at the 25 pound level of force was again between elbow angle and the endurance index ($r=-0.35$).

TABLE 9.—Strength Endurance Data for Left Aileron

Subj. No.	Time (sec)	% Max.	Time (sec)	% Max.	Time (sec)	% Max.
4	47	19	25	57	9	96
6	295	30	85	50	17	67
7	65	29	36	44	10	74
8	79	36	145	54	1	89
9	300	33	148	50	120	67
10	66	--	23	--	24	--
11	300	28	30	43	7	71
12	70	29	40	45	7	71
13	300	40	133	60	84	99
14	300	38	55	58	7	96
15	300	33	26	50	17	83
16	121	31	64	47	0	78
17	300	32	89	48	28	81
18	75	33	23	50	24	83
19	300	31	39	47	9	78
20	122	40	72	60	2	99
21	300	38	76	58	9	96
22	108	33	52	50	22	90
23	71	24	58	37	24	61
24	202	33	123	50	9	83
25	122	33	55	50	18	83
26	162	22	53	33	36	55
27	69	43	44	65	0	109
28	72	40	48	60	4	99
29	80	34	62	52	9	86

TABLE 10.—Correlation Coefficients for a Strength Endurance Index, (% Max. Strength) x (Endurance Time), Versus Seven Anthropometric Parameters

Parameter	Elevator Push 15 lb.	30 lb.	45 lb.
Age	0.2359	0.1194	0.0903
Height	0.2116	0.4981**	0.3372
Weight	0.3463*	0.4577**	0.3795*
Elbow Angle	−0.1606	−0.2186	−0.2890
Seat Back Ht. (% Shoulder Ht.)	−0.3663*	0.5141**	0.2953

Parameter	Left Rudder 35 lb.	70 lb.	105 lb.
Age	0.3267	0.5052**	0.2264
Height	−0.2548	−0.3001	−0.3314
Weight	−0.0048	0.3702*	0.1026
Knee Angle	−0.3192	0.1248	0.0344
Foot Angle	−0.3226	−0.0118	0.2893
Seat Back Ht. (% Shoulder Ht.)	0.1452	0.1234	−0.2981

Parameter	Left Aileron 10 lb.	15 lb.	25 lb.
Age	0.2294	0.0491	0.2106
Height	0.2081	0.1476	0.3303
Weight	0.0559	0.1716	0.1370
Elbow Angle	−0.4767**	−0.3338	−0.3546*
Seat Back Ht. (%Shoulder Ht.)	0.2338	0.2208	0.3179

*Significant at 10% level for r 0.338
**Significant at 5% level for r 0.398

(3) Multiple Linear Regression Analysis for Maximal Strength Data. In addition to determining whether certain anthropometric variables were correlated with maximal strength on an individual basis, it is of interest to determine how much of the variation in maximal strength can be predicted, or explained by the set of these variables (r^2).

A multiple linear regression equation for right-hand elevator push indicated that the variables of elbow angle, height, seat-back height, weight and age could explain 29 percent of the variation in maximal strength, where the variables are again listed in decreasing order of importance.

(4) Regression Analysis for Load-Endurance Data. As stated in the introduction, one of the purposes of this study was to define the load-endurance relationship for pilots operating aircraft controls. A polynomial regression analysis was performed for this purpose, using the time a given level of force was maintained as the dependent variable and the relative load as a percentage of maximal strength as the independent variable. Three data points, corresponding to performance of each of the three levels of force on a given control axis, were obtained for each of the 25 subjects giving a total of 75 data points for each control axis tested. Prediction equations were then obtained for endurance time in terms of relative load for the three control axes.

In interpreting the predicted curves for the load-endurance relationships for the three control axes tested, the fact must be kept in mind that the subjects were all tested at the same levels of force rather than at the same relative loads. This design permitted a wide variation of relative loads among the subjects under any given experimental condition and thus the shape of the individual relative load-endurance curves also varied. Most individual curves resembled some type of exponential curve; but, some curves were nearly linear. In certain cases the three standard levels of relative load were high as compared to a given subject's maximal strength, since the levels used were a compromise.

The polynomial regression program used for analysis was designed to compute linear, quadratic and cubic equations for each set of 75 data points. An analysis of variance for the regression equation as compared to the residual variance was computed for each curve fitted.

The plot of endurance time versus relative load for elevator push is shown in Figure 3. Although there is a wide dispersion of points, a definite relationship between endurance and relative load can be observed.

The wide dispersion of data points results from the combining of endurance curves for 25 subjects into one distribution. An evaluation of the analysis of variance for the regression equation indicate that either a linear or cubic equation can be fitted to the data. Since it has been shown by other investigators that the relative strength versus endurance function should approach an asymptote at 15 to 20 percent of maximal strength, the cubic equation was selected

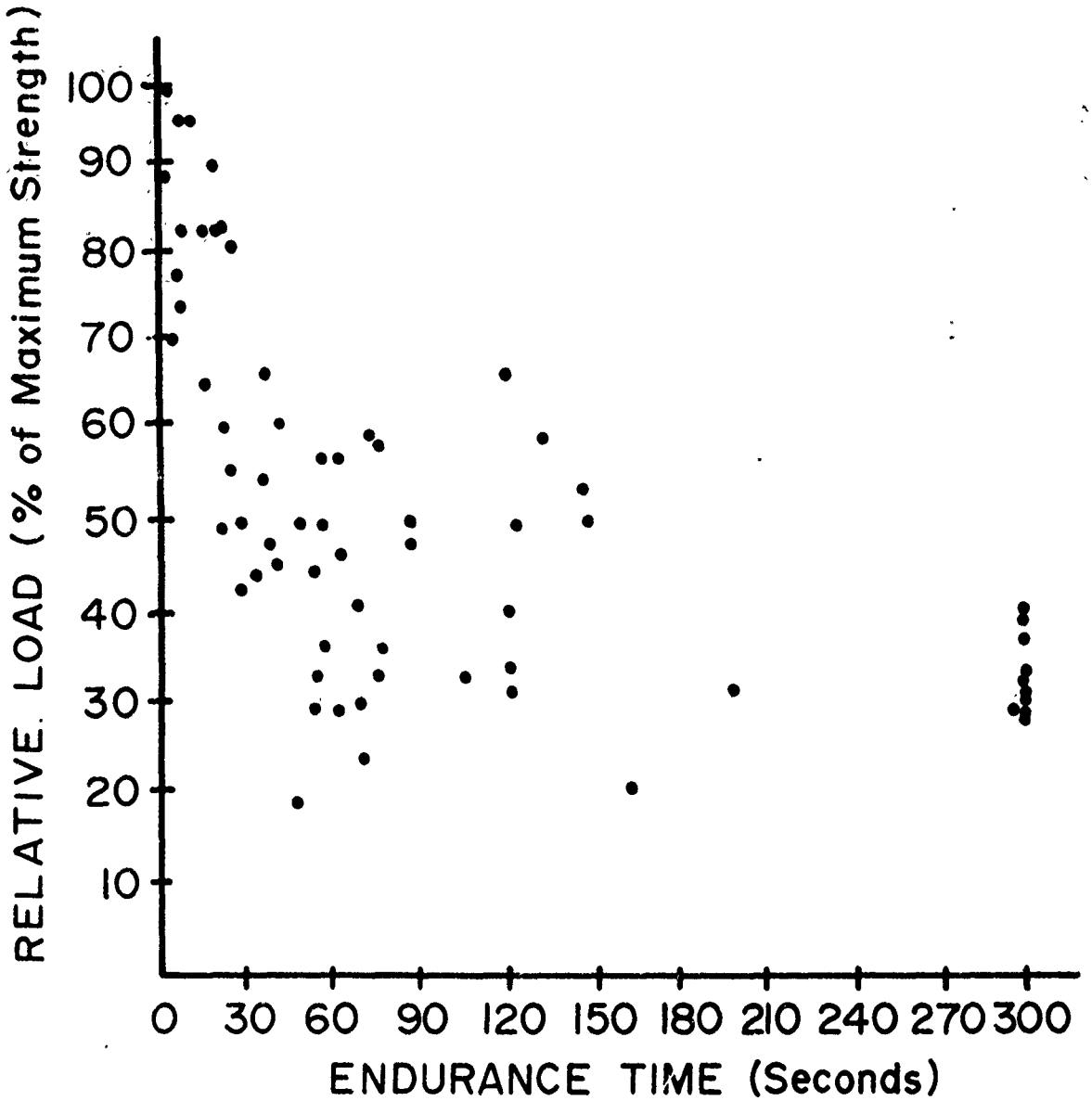

FIGURE 3.—Plot of Relative Load Versus Endurance Time for Elevator Push.

as the most suitable function. The prediction equation for elevator push versus time can be expressed as follows:

time (sec.) $=474.44-14.13647$ (relative load, % of max. strength) $+0.14431$ (relative load, % of max. strength)$^2-0.00046$ (relative load, % of max. strength)^3.

The five significant digits are shown because of the small magnitude of the cubic term.

The predicted load-endurance relationship for left rudder is plotted in Figure 4. It is apparent that the relationship shown has a more constant slope than for elevator push, which agrees with the load-endurance relationship given by Caldwell (1964). In this case, the linear equation fitted and the cubic equation fitted are similar, following a relatively constant slope.

The predicted linear equation for relative load on left rudder is as follows:

time (sec.) $=41.880-3.228$ (relative load, % of max. strength)

The final predicted polynomial equation is as follows:

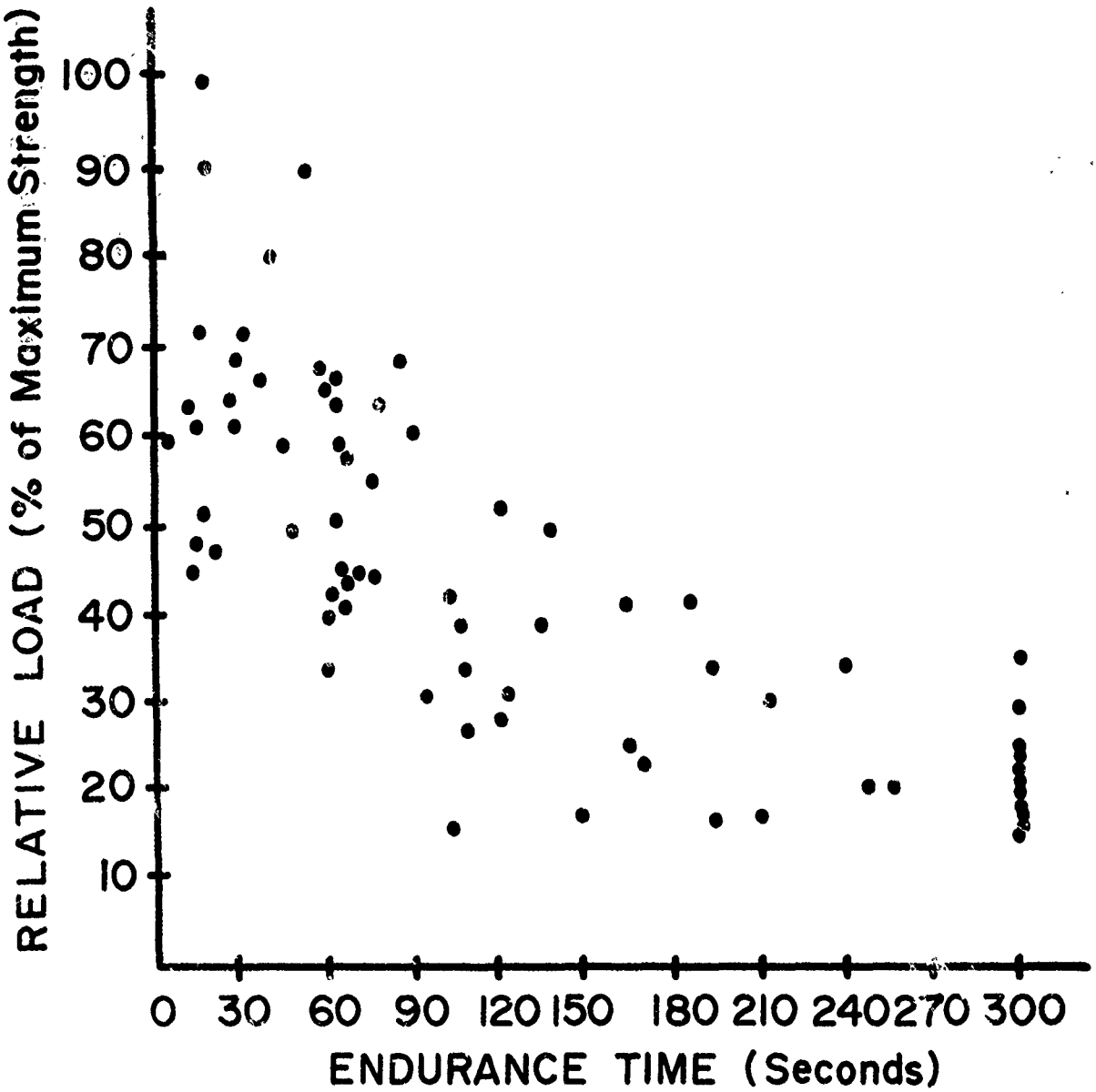

FIGURE 4.—Plot of Relative Load Versus Endurance Time for Left Rudder.

time (sec.) $=387.3550-5.55406$ (reative load, % of max. strength)
$+0.02930$ (relative load, % of max. strength)^2
-0.0007 (relative load, % of max. strength)^3

The load-endurance relationship for left aileron is shown in Figure 5.

The relationship is more similar to that obtained for elevator push than for rudder force.

The final polynomial prediction equation for the relative load-endurance relationship on aileron is as follows:

time (sec.) $=298.54698-4.86167$ (relative load, % of max. strength)
$+0.00330$ (relative load, % of max strength)^2
-0.00017 (relative load, % of max. strength)^3

The predicted polynomial equation for each control axis has been plotted in Figure 6. It can be seen that the prediction equations for rudder and aileron indicate an intercept, which is not in keeping with the results of other investigators. This result can be explained by observ-

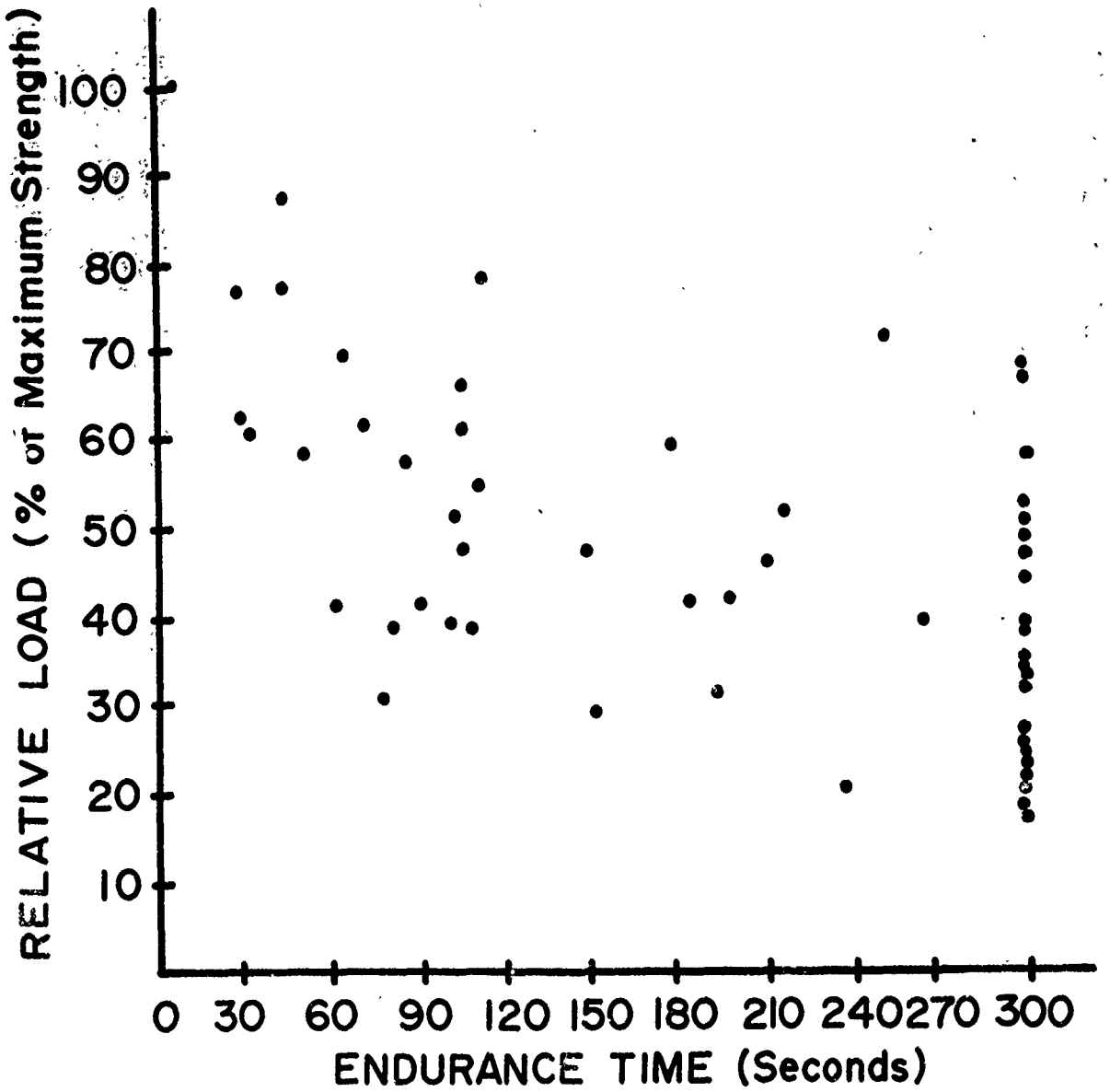

FIGURE 5.—Plot of Relative Load Versus Endurance Time for Left Aileron.

ing that the force levels chosen for endurance testing were not low enough to permit the subjects to reach an asymptote, and thus the curves do not reflect this segment of data. However, the results are useful within the range shown, and do demonstrate that an exponential relationship does exist between relative load and endurance, as shown by other investigators. The wide dispersion in the data further indicates the hazards of testing only a few subjects as has been done in the past, without taking into account the range of performance which specifications of allowable force level must include.

IV. Summary.

This study was conducted to examine the control forces which could be produced by a small population of female pilots. The control forces were in terms of a few seconds maximal effort, and a percentage of maximal effort which was held as long as possible. A ground-based, wooden "cockpit" equipped with strain gauges to measure elevator, aileron and rudder forces was used to test a selected sample of 25 female pilots. The results obtained indicate that maximum allowable force levels, as permitted by cur-

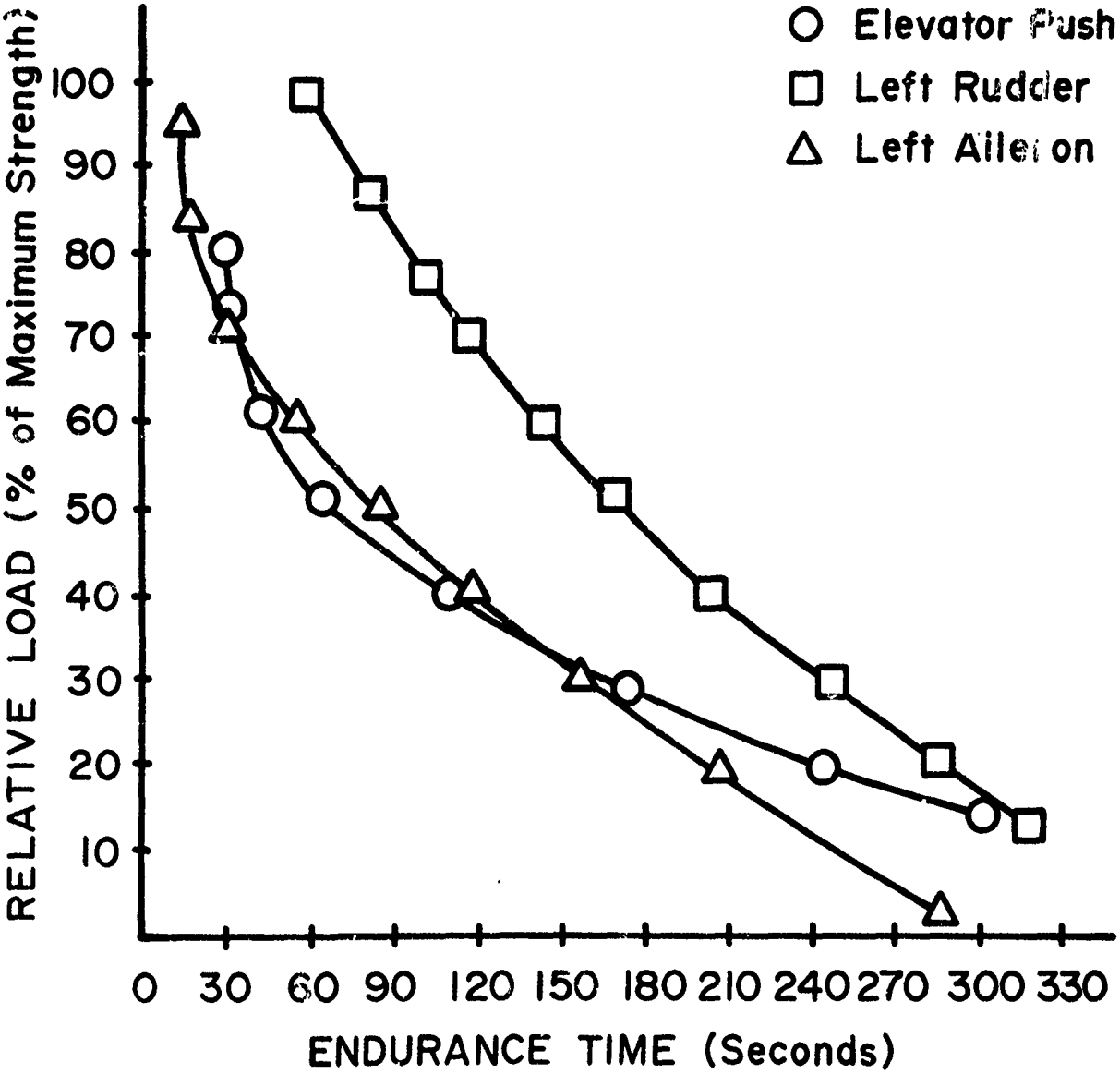

FIGURE 6.—Polynomial Regression Functions for Strength Versus Endurance Data for Each Control Tested.

vent regulations, may be too high in relation to the strength capabilities of a portion of the female pilot population. There is also an indication that all present general aviation cockpits do not accommodate the range of seat, wheel and rudder control adjustment needed by many female pilots. The use of biomechanical principles to assess the adequacy of cockpit control layout for force application is suggested for future aircraft design. Further, the relative load versus endurance curves of other investigators was found to apply to the tests of endurance, although there is the need to perform further testing to explore low levels of relative load versus endurance. Finally, on the basis of these preliminary findings, it is recommended that more detailed and comprehensive simulator and in-flight research be conducted on the ability of female pilots to safely control an aircraft during emergency control conditions.

REFERENCES

1. Asmussen, E. and K. Heebol-Nielson: Isometric Muscle Strength in Relation to Age in Men and Women, ERGONOMICS, 5:167–169, 1962.
2. Astrand, Per-Olof and Kaare Rodahl: *Textbook of Work Physiology*, New York, McGraw-Hill, 1970.
3. Caldwell, Lee S.: The Load-Endurance Relationship for a Static Manual Response, HUMAN FACTORS, 6:71–79, 1964.
4. Damon, Albert: *The Human Body in Equipment Design*, Cambridge. Harvard University Press, 1966.
5. Dupuis, H., R. Preuschen and B. Schulte: Zweckmabige Gestaltung des Schlepper fuhrer Standes, Max Planck Institutes fur Arbeitsphysiologie, Dortmund, Germany, 1955.
6. Elbel, Edwin R.: Relationship Between Leg Strength, Leg Endurance and Other Body Measurements, JOURNAL OF APPLIED PHYSIOLOGY, 2:197–207, 1949.
7. Gough, N. M. and A. P. Beard: Limitations of the Pilot in Applying Forces to Airplane Controls. (NACA-TR. No. 550), 1936.
8. Hertel, Heinrich: Determination of the Maximum Control Forces and Attainable Quickness in the Operation of Airplane Controls. (T.M. No. 583), NACA: 1930:
9. Hunsiker, Paul and George Greey: Studies in Human Strength, RESEARCH QUARTERLY, 28:109–122, 1957.
10. Karim, Bonne B.: A Study of Female Pilot Control Force Capabilities for General Aviation Aircraft. Master's Thesis, University of Oklahoma, 1971, Unpublished.
11. Kroemer, K. H. Eberhard: Human Strength: Terminology, Measurement, and Interpretation of Data, HUMAN FACTORS, 12:297–313, 1970.
12. McAvoy, William H.: Maximum Forces Applied by Pilots to Wheel-Type Controls (NACA Tech. Note No. 623), November 1937.
13. Molbech, S.: Average Percentage Force at Repeated Isometric Muscle Contractions at Different Frequencies. Communication of the Danish National Association for Infantile Paralysis, No. 16, 1963.
14. Monod, H. and J. Scherrer: The Work Capacity of a Synergic Muscular Group, ERGONOMICS, 10:329–338, 1967.
15. Morgan, M. B. and H. H. B. M. Thomas: Control Surface Design, JOURNAL OF THE ROYAL AERONAUTICAL SOCIETY, 1945.
16. Paul, Richard: Evaluation of Control Forces. Interim Report, Project No. 69–524–100 A. Federal Aviation Administration, Oklahoma, City, 1970.
17. Rohmert, W.: Ermittlung Von Erholungspausen fuer Stati Sche Arbiet des Menschen, INTERNATIONALE ZEITSCHRIFT FUER ANGEWANDTE PHYSIOLOGIE, 18:123–164(b), 1960.
18. Tuttle, W. W., C. D. Janney and C. W. Thompson: Relation of Maximum Grip Strength to Grip Strength Endurance, JOURNAL OF APPLIED PHYSIOLOGY, 2:663–670, 1950.
19. VanOosterom, T.: Measurements on the Relation Between Magnitude and Duration and on the Rate of Application of the Control Forces Achieved by Pilots in Simulated Maneuvers (AGARD Report No. 241), 1959.
20. Watt, D. N.: Maximum Forces Exerted on a Stick Type Control Column (RCAF Report 63–RD–1), 1963.