AD-752 595

CONCEPTUAL DESIGN OF A MECHANIZED SHIPYARD FOR FAST DEPLOYMENT LOGISTICS(X) PRODUCTION

Benjamin V. Andrews, et al

Stanford Research Institute

AD-752595

Prepared for:

Bureau of Ships

December 1965

DISTRIBUTED BY:

NTIS

National Technical Information Service
U. S. DEPARTMENT OF COMMERCE
5285 Port Royal Road, Springfield Va. 22151

AD752595

CONCEPTUAL DESIGN OF A MECHANIZED SHIPYARD FOR FDL(X) PRODUCTION

D D C
RECEIVED
DEC 12 1972
B

Prepared for:

FDL PROJECT OFFICE
BUREAU OF SHIPS
DEPARTMENT OF THE NAVY
WASHINGTON, D.C.

CONTRACT N00024-70-8

DISTRIBUTION STATEMENT A
Approved for public release;
Distribution Unlimited

STANFORD RESEARCH INSTITUTE

MENLO PARK, CALIFORNIA

*SRI

Reproduced by
NATIONAL TECHNICAL
INFORMATION SERVICE
U S Department of Commerce
Springfield VA 22151

ACCESSION for

NTIS White Section ☑

DDC Buff Section ☐

UNANNOUNCED ☐

JUSTIFICATION .....

Per form 50

BY

DISTRIBUTION/AVAILABILITY CODES

Dist.	AVAIL. and/or SPECIAL	
A		

December 1965

CONCEPTUAL DESIGN OF A MECHANIZED SHIPYARD FOR FDL(X) PRODUCTION

Prepared for:

FDL PROJECT OFFICE
BUREAU OF SHIPS
DEPARTMENT OF THE NAVY
WASHINGTON, D.C.

By: BENJAMIN V. ANDREWS AND DAN G. HANEY

SRI Project IM-5744

Contract No. Nobs-4968

I

Approved for public release;
Distribution Unlimited

PREFACE

This report describes the results of a two-month study of the conceptual design of a mechanized shipyard for FDL(X) ship production. The study was conducted by three organizations. Stanford Research Institute held the prime contract and was assisted by Bechtel Corporation and the naval architecture firm of Morris Guralnick Associates.

The Institute's responsibilities included analyses of modern ship production methods and shipyard layouts, the synthesis of a yard design that might prove effective in FDL ship production, and studies concerning the effects of mechanized production processes on the ship construction progress curve. Mr. Dan G. Haney, Manager of the Systems Economy Research program, was the project leader. Mr. Benjamin V. Andrews, Naval Architect, was the principal analyst. Mr. Robert Meister, Operations Analyst, contributed to the synthesis of the conceptual design.

Bechtel Corporation had responsibility for the construction engineering of the shipyard necessary to estimate the yard cost and construction time. Bechtel also assisted in analyses of production methods material flow, and layout of the yard. Mr. Kenneth Broome acted as Bechtel's project leader and was assisted by Mr. Byron Leonard.

Morris Guralnick Associates (MGA) was responsible for the analysis of the FDL(X) preliminary design and assisted in assembly sequence studies. Capt. MacKinnon Lansdowne, U.S.N. Ret., and Mr. William Warren were the principal contributors from MGA.

The valuable information obtained from Götaverken AB, AB Burmeister and Wain's, Kieler Howaldtswerke, from the other shipyards visited during this study, and from many European machinery suppliers, is gratefully acknowledged.

This report includes the material presented to the FDL Project Office in the December 16, 1965 oral briefing and provides additional backup material developed during the research.

Preceding page blank

CONTENTS

PREFACE iii

I INTRODUCTION 1

II SUMMARY 7

III SHIPYARD MODERNIZATION IN EUROPE 11

Production Methods 11
Steel Processing 11
Assembly 12
Erection 13
Progress Curves 18
Production Control 21
Ship Design 22

IV THE FDL(X) SHIP 25

FDL(X) Description 25

V SHIPYARD LAYOUT 35

Manufacture or Purchase 35
Steel Processing Area 37
Storage Yard 37
Steel Processing Building 39
Process Storage Areas 39
Main Assembly Building 40
Panel Production 40
Assembly 42
Outfitting 43
Erection 45
Completion 49
Shipyard Layout 50

VI CONCEPTUAL SHIPYARD DESIGN AND CONSTRUCTION 53

Sites Conditions and Development 55
Docks 58
Buildings 59
Materials Handling Equipment 60
Production Machinery 60
Design and Construction Schedule 61

Preceding page blank

CONTENTS

VII CONCLUSIONS 65

Suitability of Production Lines 65
Application of the Arendal Erection Principle 65
Shipyard Flexibility for Construction of Other Ship Types . 67

APPENDIX A FDL(X) SHIP DESIGN ASSEMBLY WEIGHTS 71

APPENDIX B ASSEMBLY DATA 73

APPENDIX C FDL(X) MANUFACTURE OR PURCHASE LIST 77

APPENDIX D FDL(X) ERECTION SCHEDULE 81

APPENDIX E MAJOR SHIPYARD MACHINERY 83

APPENDIX F MACHINERY MANUFACTURERS, THEIR U.S. REPRESENTATIVE, AND THEIR PRODUCTS 87

ILLUSTRATIONS

1	The Arendal Shipyard	3
2	Comparison of Four Erection Layouts for Shipbuilding Yards	14
3	Burmeister and Wain's New Shipbuilding Facilities	16
4	Arendal Erection Principle	17
5	Shipbuilding Progress Curves	19
6	FDL(X) Profile View	27
7	FDL(X) Assembly Arrangement--Sections 9 and 10	29
8	Typical FDL(X) Assemblies	30
9	Assemblies for FDL(X) Section 10	31
10	Deck Arrangements for FDL(X) Section 10	32
11	FDL(X) Shipyard Concept	36
12	Steel Processing Area	38
13	Main Assembly Building	41
14	Assembly, Outfitting, and Dock Area	44
15	FDL(X) Station Activity	46
16	FDL(X) Ship Erection Schedule (Partial)	48
17	Shipyard Layout	51
18	Shipyard Site Description	56
19	Shipyard Design and Construction Schedule	62

TABLES

1	Mechanized Shipyard Cost Estimate	54

I INTRODUCTION

Background

The capability to deploy rapidly large numbers of military equipment and vehicles to overseas areas is becoming increasingly necessary to the Department of Defense. Past studies and experience have indicated the desirability of possessing extensive transportation resources for movement of troops and supplies in crises and limited war situations. Currently, air transportation can provide airlift of troops, small arms, and limited quantities of mechanized equipment. However, transportation demands for mechanized equipment for major military units far exceed the planned airlift capabilities. The Fast Deployment Logistic vessel (FDL) concept fills the need for advanced, prepositioned, mobile equipment supply sources.

The FDL ship performance characteristics have been defined to include the ability to load and discharge vehicles and cargo by roll on/off, lift on/off, swim on/off, and helicopter methods. A relatively fast, sustained sea speed is desired to provide rapid deployment of entire mobile army units, and an unusually high standard of dependability is also desired for long voyages where repair facilities are not available.

The U.S. Navy is prepared to support a program of studies to explore and evaluate characteristics of mechanized production for the FDL program. To initiate this program, contractors will be presented with examples and illustrative material outlining at least one approach to mechanized construction and indicating the nature of the advantages that may be realized.

The number of FDL ships to be built may be so large that conventional, multipurpose shipbuilding yards may be less efficient than a highly mechanized and specialized yard designed for FDL construction. As additional quantities of one ship design are built, an increase in the number of unique facilities and mechanized production arrangements could reduce shipbuilding costs. The production line configuration of World War II shipyards, designed to produce more than 100 ships of a single type, is an example of such specialization. At present, few shipyards in the world have orders for large enough numbers of similar ships to benefit from mechanized production techniques.

Many shipyards in the United States, West Germany, England, and Japan have achieved improved efficiency in materials handling and flow, and also in fabrication and assembly processes. New advances in production planning and the use of computers for numerical control of machines and other purposes are being developed. An outstanding example of some of these techniques and developments is provided by the bulk carrier and tanker yard at Arendal, Sweden. This study focused on the feasibility of incorporating techniques used in the Arendal shipyard in the yard configuration for FDL(X) construction, the Bureau of Ships preliminary design of the FDL.

The Arendal Shipyard

The Arendal Shipyard, one of three shipyards operated by the Götaverken Company, is located near Gothenberg, Sweden. It has received considerable attention in the press and from persons in the industry because of its use of new concepts in ship construction. Arendal's ship erection principle--extruding ships out of an assembly building into a building dock--can be distinguished from its total yard concept of production processing. Arendal can be of considerable assistance in evaluating the potential of new shipyards, for it is a unique, completely new facility whose construction was not restricted by old buildings or production techniques. Arendal is shown in the perspective drawing of Figure 1. As a result of its unrestrained approach, Arendal has made progress not only in improving the method of erection of ships, but also in production processes throughout the entire shipyard. For example, while the steel processing facilities are not an essential part of its erection principle, impressive advances in this area have been made. However, many of the steel processing improvements at Arendal are rather common elsewhere in Europe and are being adopted in this country. The study team also assessed modern techniques used in ship construction in other shipyards.

The Arendal erection principle is suitable for building tankers and bulk carriers, which require relatively little outfitting and concentrate almost all machinery in the aft hull sections that are built first. However, FDL(X) ships are much more complicated than ships built at Arendal and are outfitted throughout their length, within the bottom and on the upper decks. Further, the weather at U.S. shipyard locations is not usually as demanding of enclosed space as is the Swedish climate. Therefore, the concepts and design of the Arendal yard cannot be adopted exactly, but must be tailored to reflect the U.S. weather conditions and FDL ship design. The Arendal concept was adopted as the model for this study, not necessarily because it was considered the best or the only way to build the FDL(X) ship, but because of the considerable interest and attention in the possible application of this principle to FDL construction.

Objectives

The objectives of this research report are: (1) to outline a concept applying modern manufacturing techniques to the development of a mechanized yard for the construction of FDL ships, and (2) to provide a preliminary assessment of the yard capital cost and its production rate.

Method of Approach

The major steps included an analysis of the FDL(X) ship design and the principal interfaces between ship design and shipyard design; the description of the functional operations required in ship fabrication, assembly, erection, and outfitting; a synthesis of an overall shipyard

Figure 1

THE ARENDAL SHIPYARD

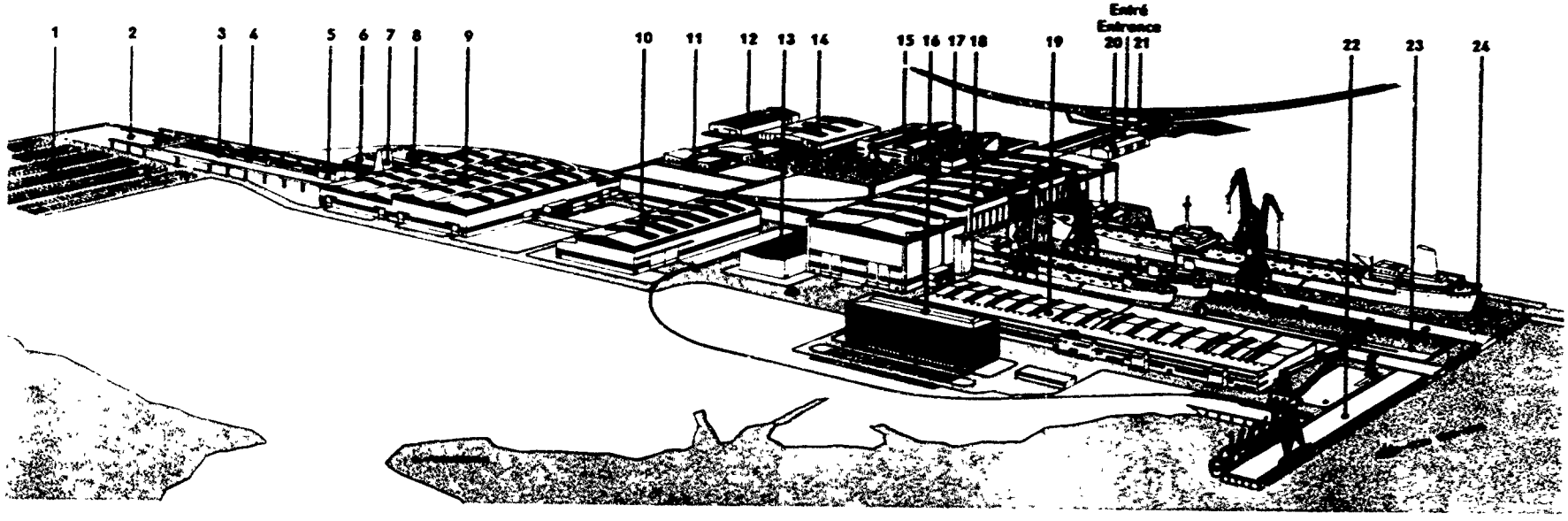

1. Plate yard (Long-term stock yard)
2. Plate yard (For immediate use)
3. Conveyor belt
4. Straightening roller
5. Shot blasting (plates)
6. Mould shop
7. Optical marking
8. Shot blasting (profiles)
9. Plate shop
10. Welding shop
11. Central kitchen and canteens
12. Cold store
13. Buffer store
14. Heated store
15. Production shops
16. Office
17. Acetylene generating plant
18. Hull assembly hall
19. Equipment shops
20. Changing rooms and swimming pool
21. Staff amenities building
22. Fitting-out pier
23. Building dock II
24. Building dock I

SOURCE: Götaverken AB

patterned after the Arendal principle; and analyses of costs and productivity of a modernized shipyard. Development of the mechanized shipyard concept was based on field work at modernized European shipyards. The scope of the study did not include an estimate of the construction cost of the FDL ship.

Certain criteria have been used as guidelines in formulating a concept of a mechanized shipyard for FDL(X) ships. Because of the limited time available, the study focused on the development of only one of the many alternative approaches to new shipyard design. A number of methods for accomplishing some of the different production tasks required in the total shipbuilding procudure were considered, but selection of methods was based largely on intuitive judgment, rather than on quantitative analysis. Considerably more study is necessary before it could be stated that a particular concept, or a particular sequence of detailed production operations, is the optimal method of building the FDL(X) ship.

A guideline for shipyard design is that construction of 5 to 30 FDL ships would be required per year. The concept presented in this report resulted in an estimated basic production rate of 6 ships per year. This rate would be increased to 12 ships by resorting to two-shift operation, and to 24 by duplicating most of the facilities of the yard.

The study team assumed that a new yard constructed principally for FDL(X) ship production would be used for some time after completion of the FDL program. If a new yard proves more attractive than existing facilities for the construction of the FDL ship, it should also be competitive in the U.S. market for production of other types of ships. Thus, there probably would be continuing production from the new yard. The assumption was adopted that the yard would have a relatively long life, and also that it would be capable of building a number of different ship types.

A typical site was chosen for a new shipyard rather than a specific location. The site is assumed to be located on the northeast Atlantic Coast--Chesapeake Bay and north--at the mouth of a river that is protected from severe seas and within approximately 10 miles of a city of 100,000 population. In addition, utilities of all types are assumed to be available. Some snow and some rain would be expected at the shipyard location.

The yard design is based on the assumption that the yard would manufacture only those items which form the ship's structure, or which comprise the piping and duct systems of the ship, and that it would install purchased equipment. Accordingly, steel processing activities and hull fabrication activities are the primary manufacturing operations. The shipyard is assumed to purchase all shipboard machinery, equipment, outfitting items--including furniture--and additional material such as propellers, shafts, and shipboard materials handling equipment. This assumption permits the study to focus on the major operations concerned with the actual process of shipbuilding. Also, the cost of the yard is reduced by eliminating the need for specialized manufacturing facilities that may already be available within the maritime industry.

Guidelines for Serial Production

A number of related guidelines have been adopted for the synthesis of a mechanized shipyard for FDL(X) serial production.

First, production line processes can and should be installed in shipbuilding and used in preparation of outfit, machinery, and hull engineering.* The attributes of production line processes include: Material transfer is handled by more or less automatic means, and labor becomes more proficient in work by specializing in a single job that can be repeated in a single location.

Second, special jigs and fixtures can be designed in serial production to expedite much of the fabrication process, both in and off the production lines. An example is the jigs used to preposition stiffeners prior to setting them on the plates.

Third, many parts of the FDL(X) ship design may need changes to improve efficiency on production lines and in final ship assembly and erection. Close liaison between those responsible for ship design and those responsible for accomplishing its construction can be maintained by a production engineering staff that recognizes the problems of both.†

Fourth, one way to reduce the large amount of labor required in fitting-out operations is to permit a major share of outfit to be placed in assemblies before they are placed on the ship. Much fitting-out labor is tied up in transporting the workman, his tools, and his materials to a specific location within the ship. These movements can be reduced by locating the assembly directly adjacent to the outfitting area.

Fifth, contrary to present practice, labor should be assigned to perform all of the duties necessary at a specific location, rather than assigned by particular craft association and skill to jobs at varying locations. If more repetitive work can be performed in particular areas, such as on production lines or within particular shop production areas, labor assignment to specific stations is more possible.

Sixth, many proposed shipyard production lines could be mechanized to an extent not currently known in the United States. However, existing shipbuilding methods could not be so mechanized. Computer control of

---

* The single descriptive term of "outfit" used throughout this report refers to the installation of these components in the steel hull.

† A number of European shipbuilders indicated a strong preference to have their own staff design the ships produced for their customers. The shipbuilders claim that production savings result from in-house design and are reflected in lower prices for their ships. At Burmeister and Wain's yard, almost 10 percent of the total direct labor force is engaged in production engineering.

machines and of jig setup is an accomplished fact, and the FDL program may be able to extend these advanced techniques to translate automatically ship design data into production engineering data for many processes and production lines.

Finally, reduced ship construction cost resulting from mechanized shipbuilding can be achieved only if precise production control activities are available at a new shipyard. To prevent disruption of the flow of materials, the men, machines, and materials must be available at the precise time they are needed. An expansion of the production control function over that now available is necessary to ensure smooth manufacturing of parts and assembly of ships.

II SUMMARY

Shipyard Modernization in Europe

Significant improvements in ship construction techniques have been introduced in European shipyards in recent years. These improvements have resulted from the economic impact of foreign competition--especially Japan--and from technological development that has forced shipbuilders to enlarge facilities for construction of larger ships.

In steel processing operations, mechanized materials handling, automatic flame cutting of steel plates, automatic fabrication of large girders, and cold frame bending are some of the improved production methods that have been implemented.

In the fabrication of assemblies, shipbuilders have improved efficiency by installing mechanized production lines for flat panels and decks, introducing automatic welding machines, and by using computer-generated production and production control guidelines. A tendency toward the fabrication of very large assemblies prior to ship erection is prevalent, requiring lifting capacities of large cranes on the order of 300 to 600 tons. Modernization usually includes adoption of the principle that all assembly operations should be accomplished indoors.

Three shipyards have introduced revolutionary, but distinctly different methods of ship erection. These yards are Arendal, Sweden; Burmeister and Wain's, Denmark; and Kieler Howaldtswerke, Germany. All three use building docks rather than launching ways and intensively use the dock to maximize ship production rates. Arendal erects ships indoors, while the others accomplish these operations outdoors.

Substantial improvements in outfitting operations have not taken place to the same degree as those in other operations. However, accomplishing outfitting operations is desired as early as possible in the shipbuilding schedule.

Shipyards using more conventional shipbuilding techniques, as well as those that have introduced mechanized techniques, have experienced learning or progress that results in a continual decrease in labor hours in producing large numbers of ships. However, in initial operations the recently modernized yards have experienced higher costs for the first few ships than if the ships were built by conventional methods. More rapid progress toward low costs offsets the higher initial cost of new yards.

The FLD(X) Ship Design Analysis

The Bureau of Ships preliminary design of the FDL(X) was used to provide a basis for design of production operations, selection of production equipment, and for sizing and balancing production flow. The ship design was divided into 16 sections, and then into some 90 principal assemblies, whose weights frequently exceed 300 tons. Major assembly types found throughout a major portion of the ship's length are the bottom assemblies, side assemblies, and vehicle decks. Because of the large numbers of these assemblies, special facilities might be justified for their production in the yard.

Assemblies were further divided into subassemblies and fabrications in order to estimate the size and number of production facilities that would be needed in early stages of a ship's construction schedule.

The Mechanized Shipyard Concept

Mechanized facilities are provided in the steel plate and shape and pipe storage areas for receiving and preparing materials for processing. Materials move by conveyors through the preparation machinery to areas for cutting and shaping. Processing equipment to produce repetitively each kind of steel pipe, plate, or shape, is located along the material flow lines. Conveyors and cranes are provided to expedite movement and maximize utilization of expensive equipment. Storage for materials in process have been provided to smooth production flow and facilitate further production. Flat plates and shapes move by conveyor to the main assembly building.

The semiautomatic fabrication of flat, stiffened plates into subassemblies is done on five conveyor production lines for the largest deck panels, for vehicle decks, and for small bulkhead and deck panels. The panels are moved to other areas for bottom, upper and lower side, and deck house assembly fabrication.

Curved plates and shapes are moved by vehicle. Curved shell panels are fabricated on contoured jigs. Panels are joined into subassemblies in positioners to expedite welding, and the lighter subassemblies are moved by cranes into assembly areas serviced by heavier capacity cranes. After structural fabrication of assemblies is complete, foundations, piping, machinery, and outfit are installed while each assembly is easily accessible to outfitting shops.

The outfitting shops are centrally located so that purchased materials can flow into the warehouse and through the outfitting building, to the outfitting assemblies, to the building dock, and to the outfitting wharf. The shops are arranged as production lines for items such as ventilation ducts, heads, electrical cable harnesses, and small pipe systems.

Each assembly, with outfit installed, is lifted into the FDL(X) at the appropriate time and at one of the five stations in the building dock. After two or three 8-hour work shifts, the completed structure of the ship is pushed stern-first 40 feet out of the assembly building. About 40 work shifts are needed to erect all assemblies and complete the underwater hull before launching the ship. During this time, installed outfit can be connected and completed. Almost all production is indoors.

After launching, the FDL(X) is towed to the two-level outfitting dock, which provides direct access to the FDL(X) ship at the main deck level and at the fourth deck side ports. After final tests are performed, and the ship is complete, and sea trials are passed, the FDL(X) is delivered before the subsequent ship is launched. With one work shift daily, six ships could be produced per year, or twelve ships with two-shift operation.

Yard Construction Time and Cost

A typical site for the conceptual shipyard was selected on the Atlantic Coast north of Hampton Roads. About 140 acres of flat land are desirable for a one-building dock yard, and twice that area is necessary to double production. Since a large fraction of the total yard area is covered by buildings, or parking space for employees' autos, a more suitable term than shipyard may be ship building plant.

The cost of the one-dock yard is estimated to be $80 million, and $144 million for a two-dock yard. Land costs, hand tools, and tooling for the FDL(X) would be additional expenses. The one-dock yard could be constructed in 30 months if extensive ship design, industrial and construction engineering, and material procurement are completed in advance. Parts of the yard could be available prior to the end of construction.

III SHIPYARD MODERNIZATION IN EUROPE

The major shipbuilding yards in Europe are altering their layouts and facilities to achieve production line goals. The extent of modernization varies widely at various yards. Most yards have rationalized the flow of steel into and through initial storage, preparation, and cutting areas. Several yards have production lines for small fabrications, but very few have extended production line techniques into the assembly and outfitting of entire ships. This chapter describes notable aspects of production changes completed or contemplated.

Production Methods

The principles of production lines and their application to shipbuilding as described in the Introduction are relatively simple. On the production line, the parts being fabricated move past a series of work stations, where each employee in turn repeats one specific process. Each employee performs all the steps required at his station. Tools and supplies are delivered to the employee at the rate needed to maintain production without delays. After passing through all the work stations, the product is complete.

In some cases, such as erecting tall buildings and large dams, the material being fabricated cannot move past a laborer at his normal workplace. In this case, the laborer moves about on the job, taking his tools and supplies with him to each task. Shipbuilding is usually considered within this category of construction. In this study, we have described a ship production line in which the material being produced moves past the work stations. Not only the steel pieces, but entire decks, engine rooms, and even the ship itself are manufactured on production lines. The production lines described here are feasible combinations of production line principles and current technology. Further improvements to achieve the high labor efficiency inherent in mechanized or automatic production lines could be implemented with detailed study.

Steel Processing

Movements from storage and preparation of steel plates and shapes prior to fabrication has become a highly mechanized production line at almost all large European shipyards. The unloading of delivery vehicles, rolling the steel to make it straight, cleaning of mill scale, prime painting, cutting, and delivery to the fabrication areas are generally performed mechanically by 10 to 30 men. A production line is usually established up to the cutting steps, with the same sequence of operations

Preceding page blank

described above. Conveyor lines could be extended to load and unload cutting machines. Each of the preparation operations is usually done by a single machine at each station along the conveyor carrying either plates, shapes, or both.

Many different manufacturers produce roller leveling, shot blast, prime painting, cutting, and conveying machinery. (See Appendix F for a partial listing of manufacturers.) Very few of these machines are installed in U.S. shipyards.

In some European shipyards, the line or flow of material is not accomplished by conveyors. In these yards, the management complained of the bottleneck in processing rate due to inadequate materials handling equipment. In the fully mechanized steel processing layouts with conveyor lines, a single equipment of each type was considered more than adequate for enormous annual throughputs of steel. The interrelationship of production equipment throughput and matching material handling equipment was clearly demonstrated by this contrast.

Assembly

The fabrication of subassemblies and assemblies and erection of the ship hull were not accomplished as uniformly as the steel processing at the various European shipyards. For example, the basic operation of welding plates together and then welding stiffeners to the plates was accomplished in several sequences. The traditional method of placing the plates on the building way and welding plates together in place was not observed in any European yard visited, except in special circumstances, such as bilge strakes riveted on a seam.

In most yards, a hull shell area or part of a bulkhead is fabricated in place on a welding platen. Plates are joined, and stiffeners are fitted and welded individually by manual procedures. Traditionally, workers are moved from fabrication to fabrication as needed. No other work is done on the fabrication before lifting it into place in an assembly or on the ship in the building way. Lift weights up to 30 or 40 tons were common using this production method.

Two shipyards have established production lines for manufacturing bulkheads, decks, or flat shell plating. Steel plates and shapes are supplied at the start of a conveyor. The production sequence is the same in each line. At the first station, plates are joined by automatic butt-welding machines. At the next station, the location of stiffeners is marked on the plates, and edges are trimmed. The stiffeners are sometimes tack-welded after being placed. At the third station, automatic machines weld each stiffener, sometimes without tacking. These panel production lines are manned by relatively few men, each specializing in only one operation. These lines are indoors and reportedly achieve great reductions in cost of producing flat, stiffened-plate panels.

Large assemblies are prepared in a few shipyards by joining shell, deck, or inner bottom fabrications on the building platen, usually outdoors. The weights of these assemblies invariably are limited by crane capacity available in each building way. Installation in assemblies of foundations, machinery, and outfit is also limited by the added weight-lifting capacity needed. Lifts of up to 120 tons are needed for erection of supertankers and large bulk carrier assemblies by conventional methods. The same building techniques were used in many U.S. World War II shipbuilding programs.*

Erection

The conventional erection layout is shown on Figure 2. Assemblies fabricated adjacent to the launching way can be lifted into place on the ship by one or more portal cranes. Almost all U.S. and foreign yards erect ships by the conventional techniques.

The most advanced ship-erecting techniques were observed at the few yards that were not handicapped by limited weight-lifting capacity. In the well-equipped yards, lifts of 200 to 600 tons could be assembled inside buildings and transported to the launching way or building dock. In the process of transportation of the very large assemblies, a delay was sometimes planned near the shops, so that outfit could be installed in the assembly. Piping and foundations were often completed prior to erection; some equipment was installed; and occasionally even painting and sheathing was begun while the assembly was easily accessible.

The particular method of lifting and erecting these very heavy assemblies is especially important to this study, because different methods may result in different yard layouts, costs, and benefits.

The most advanced European yards for handling large assemblies were Arendal of Götaverken near Gothenburg, Sweden; Burmeister and Wain's at Copenhagen, Denmark; and Kieler Howaldtswerke, Gaarden, Kiel, Germany. All three yards erect ships in a building dock, not on ways.† The sketches of Figure 2 depict the layouts of the assembly halls, building docks, and largest cranes at these yards. Figure 2 also depicts a common layout of a conventional shipyard launching way or building dock.

---

* For a complete description of shipbuilding techniques in the United States prior to and through World War II, see The Shipbuilding Business in the U.S.A., Volumes I and II, by the Society of Naval Architects and Maine Engineers, 74 Trinity Place, New York 6, New York, 1948.

† The managements of most European shipyards are convinced that the extra cost of a building dock over a launching way is rapidly repaid by savings due to increased production efficiency.

Figure 2

COMPARISON OF FOUR ERECTION LAYOUTS FOR SHIPBUILDING YARDS

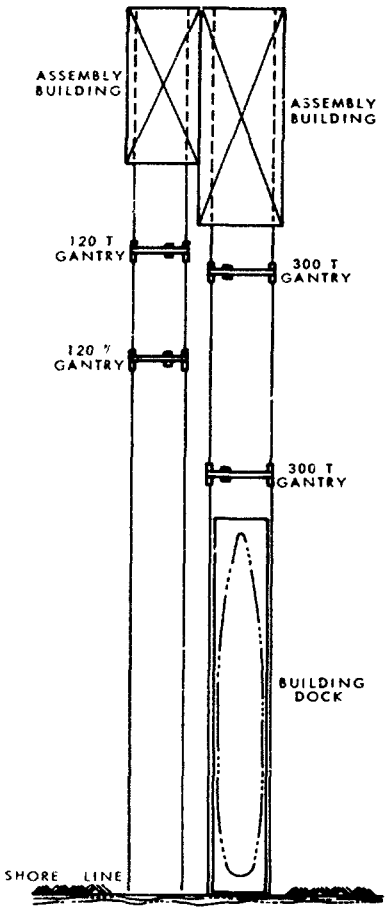

BURMEISTER & WAIN

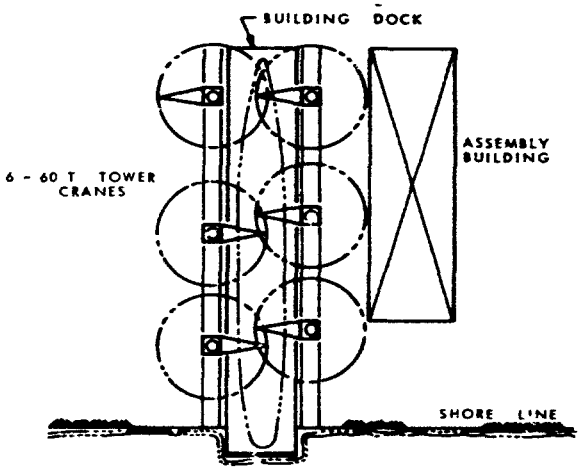

CONVENTIONAL

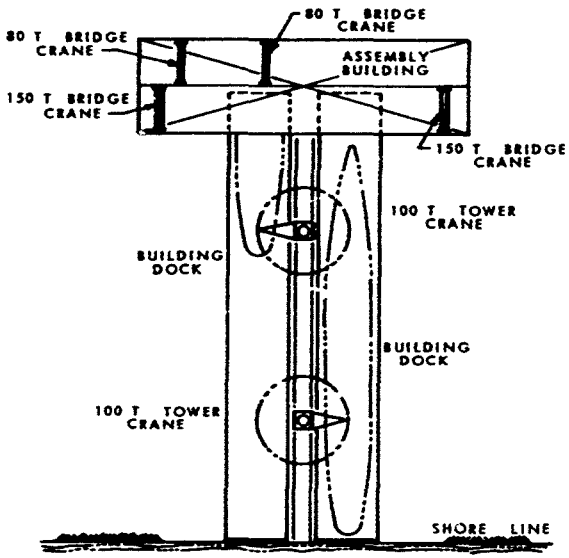

AREMDAL

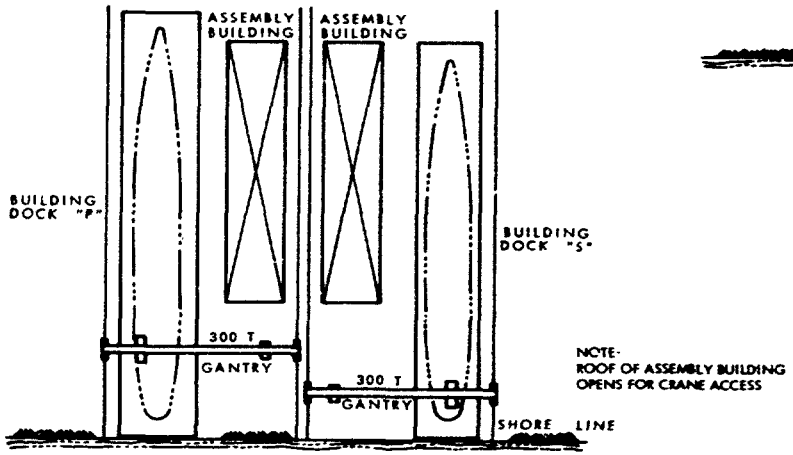

KIELER HOWALDTSWERKE

SOURCE: Bechtel Corporation

The Burmeister and Wain's (B&W) ship erection layout is perhaps the simplest of the three advanced yards. A pair of 300-ton gantry cranes on tracks straddle the single building dock, and the tracks extend hundreds of feet inshore from the building dock into a main assembly building. A subassembly building, adjacent to the main assembly building, is served by a pair of 120-ton gantry cranes. Movements of subassemblies from the area served by the 120-ton cranes to that served by the 300-ton cranes is accomplished on a tracked transfer vehicle in front of the assembly buildings. The cranes and buildings are illustrated in the photograph, Figure 3.

The Kieler Howaldtswerke yard is being completed with a different arrangement of cranes to serve both the building dock and assembly building. A single gigantic gantry crane straddles the erection dock and the assembly hall, and an open space between the two. The assembly building has a segmented roof on rollers that can be moved away from the top of each assembly that is to be lifted out of its place of fabrication and erected on the hull in the dock. The crane span must be long and high enough for any lifted section to clear the assembly building walls. This arrangement was chosen because of inadequate space available at the head of the dock.

Both Burmeister and Wain's and Kieler Howaldtswerke are able to erect assemblies at any place on the hull in the dock. However, only one or two large cranes of 300-ton capacity can service the building dock, and can also assist in moving heavy assemblies during fabrication. Both yards transport subassemblies of much lighter weight to the main assembly building, and both attempt to install as much machinery and outfit as possible in each assembly prior to erection.

The Arendal shipyard uses a substancially different technique than the conventional methods described above. The technique has been nicknamed the toothpaste technique because the ship is extruded out of an assembly hall as it is being erected, instead of being erected in place.

In the design of its yard, the Arendal staff was faced with the need to provide capability for year-round production. To ensure maximum efficiency during all types of weather, most ship assembly and erection operations are accomplished indoors. The Arendal principle permits indoor erection of ships without requiring a building that covers a ship's entire length. The important features of the Arendal erection principle are illustrated in Figure 4. The main assembly building is served by heavy-lift cranes. A part of the building dock is inside the main assembly building, and a pushing mechanism is located at the floor of the building dock.

Arendal divides each tanker or bulk carrier into a number of sections that essentially are formed by vertical slices perpendicular to the length of the ship. Within each section, enough assemblies are fabricated to limit lift weights to less than crane capacity. A number of assemblies that are fabricated in the main assembly building are erected in the dock to complete each section. When a complete section of a ship is erected,

Figure 3

BURMEISTER AND WAIN'S NEW SHIPBUILDING FACILITIES

SOURCE: AB Burmeister and Wain's

Figure 4

ARENDAL ERECTION PRINCIPLE

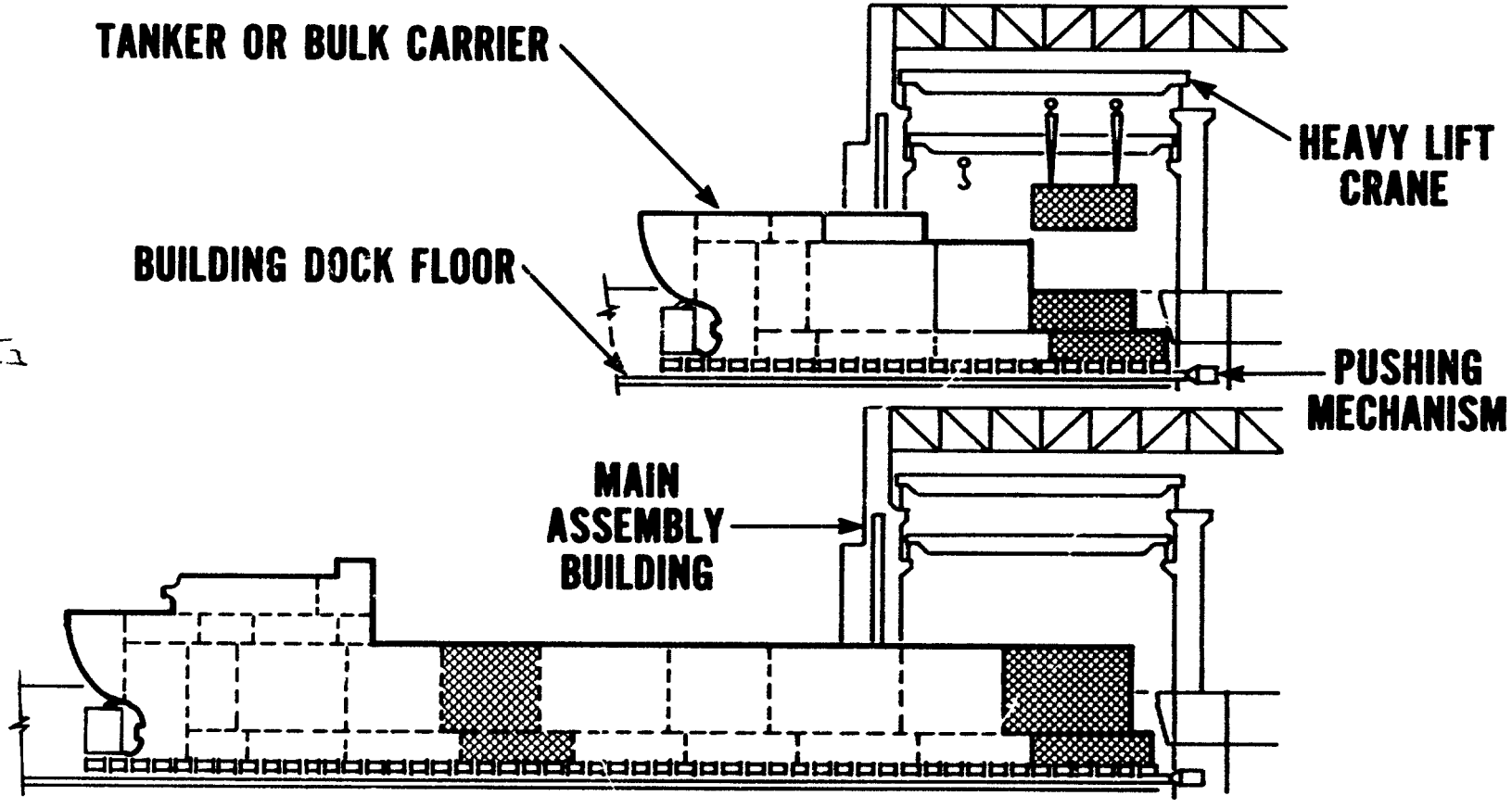

SOURCE: Götaverken AB

the hydraulic mechanism pushes the ship out of the main assembly building for one section of its total length. Work can then be started on erecting new assemblies for the next sections. The sections at Arendal are generally about 13 meters, or 40 feet in length, and space is available in the dock for work on two sections of a ship at a time.

Another important feature of the Arendal yard is the ability of the cranes to serve the erection area in the building dock from a number of different directions. The heavy-lift cranes shown in Figure 4 can lift assemblies into the dock from either side of the dock; in addition, assemblies can be lifted from a location directly behind the dock into their required position in the ship. Thus, the Arendal erection principle concentrates fabrication and erection of a ship in a relatively small area served by heavy-lift cranes.

The Arendal concept is not universally accepted as the most economical method of ship construction; other European yards are convinced that their assembly techniques are also quite efficient. The Burmeister and Wain's yard presents an interesting contrast to Arendal. Here, the fabricating of assemblies is accomplished indoors, but the entire assembly of the ship is done outdoors in a building dock some distance from the assembly buildings. Although in similar climates, the two yards have adopted substantially different erection principles, partially because of differing site conditions. Arendal accomplishes all ship erection work indoors in a very intensively utilized work area; B&W concentrates its effort by enclosing work associated with fabrication of assemblies, but performs final ship erection activities in an open building dock.

The effect of weather on ship construction labor hours is an extremely important aspect of the location and economics of a new shipyard. The arguments for and against enclosed building docks have not been studied to an extent that shipbuilders agree on the degree to which enclosed assembly docks are justified in relation to weather conditions. Obviously, the choices made by Arendal are predicated upon the conviction that all work must be done indoors. This climatic factor is not as imperative for all potential FDL shipbuilders.

Progress Curves

The beneficial effect of learning or progress on the unit construction cost of ships* is an important justification for the expenditure for new shipbuilding facilities. Figure 5 indicates estimates of the shipbuilding unit progress curves for direct labor man-hours--a cost indicator--under two different conditions. The data from which these curves

---

* The theory and application of progress curves is discussed in Harold Asher, Cost-Quantity Relationships in the Air Frame Industry, Rand Corporation report R-291, July 1956.

Figure 5

SHIPBUILDING PROGRESS CURVES

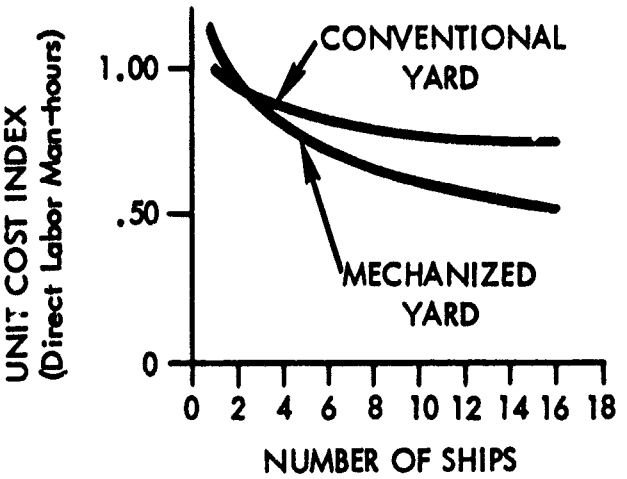

HIGH COST AT START

FAST REDUCTION

TWO KINDS OF LEARNING
- LEARNING SHIP DESIGN
- LEARNING NEW YARD

LEARNING DEPENDS UPON
- PRIOR EXPERIENCE OF PRODUCTION FORCE
- CONTINUED INDUSTRIAL ENGINEERING EFFORT

SOURCE: Stanford Research Institute

were derived were obtained from ship producers, both in Europe and the United States. The curves reflect an estimate of the progress that might develop under comparable shipyard construction of a series of ships. The curve labeled "conventional yard" indicates the 94 percent slope unit progress that might be expected on a new ship by a shipyard staff that is accustomed to working with conventional American shipyard equipment, facilities, and layout. The second curve labeled "mechanized yard" indicates the type of reduction in unit construction direct man-hours that might be experienced for a new modernized yard of the types described, with about 84 percent slope.

Perhaps the two most important facts observed from the data are that a considerably higher cost should be expected for the first few ships produced in a modernized and new yard, and that relatively fast reduction in cost can be expected after the new yard is put in operation.

The basic reason for these facts is that two kinds of learning take place with a new modernized yard. First, the production staff, the foremen, and production control and management personnel are learning a new ship design and benefitting from that learning process. Second, with a modernized yard, they are learning to operate the new yard itself. Costs may reasonably be expected to be 10 to 20 percent higher for the first ship than if it were built in a conventional and efficiently operating yard. However, as the yard force becomes accustomed not only to the ship design, but also to the facilities of the new yard, progress takes place more rapidly. After a relatively small number of ships are produced, the number of direct labor man-hours should be considerably lower for the modernized yard than for the conventional yard.*

The amount of learning should depend to a considerable extent on (1) the prior experience of the production force, and (2) the degree to which industrial engineering or production engineering efforts are continued.

If a new shipyard is located where labor has little prior experience in shipbuilding, very rapid progress of the shipyard force might be expected, but may start off at a relatively high cost level. On the other hand, if a work force having considerable prior experience is employed, the slope of the unit cost curve should be considerably less, and reasonably should start off at a lower cost level, i.e., less progress and lower initial ship cost.

---

* The average direct labor cost per ship may be equal in conventional and modernized shipyards at about the fourth or fifth ship. However, large setup costs and capital investment costs are incurred with a modernized shipyard that must also be repaid by direct labor savings to reach true equal ship cost, or equal total costs of production.

Continued industrial engineering effort should result in continual reduction in the man-hours required to manufacture ships. The data used to derive the curves shown in Figure 5 reflect a dynamic situation in which management and engineering staff are making continual changes to improve the production efficiency, not upon a static situation in which a yard force goes to work under fixed conditions. The areas of production control refinements and ship design improvements to reduce production costs are two obvious areas where continuous changes can be accomplished.

The data underlying the progress curves are typically found at conventional American or at modernized European shipyards. Newer shipyards can be conceived that are more automatic or that are specialized to produce many ships of one type. At the present state of shipyard mechanization, further replacement of manpower with machines can be expected to result in greater tooling and set-up costs, and higher direct labor hour expenditures on the initial ship. However, the progress curve slope may be even steeper as a result of faster learning on subsequent ships if further mechanization is provided.

The precise progress curve slope and higher initial unit cost combination cannot be estimated from data that were available within the limited time allocated to this study. The appropriate initial investment in highly mechanized shipyard machinery and specialized ship-type tools and jigs partially depends on the number of ships to be produced. Also, machinery to automate ship fabrication and outfitting are not currently available and must be developed. The development time and cost may be excessive for any one shipyard, or even a few, to support.

Production Control

The changes in ship size since 1946 have increased the demands for improved production control in shipbuilding. The rapid growth in size of tankers began at that time, and, in more recent years, the sizes of bulk carriers and container ships has also increased. The necessity to provide crew and accommodations, propulsion plant, pilot house, steering gear, and other expensive machinery, only once per ship regardless of the amount of cargo carried, makes large ships more economical.

Conventional methods of fabricating and erecting ships were appropriate when steel plates were relatively lightweight and could be fabricated easily using hand tools. Also, since all ships were about the same size and power, and required similar equipment and ways for erection, any shipyard could build any ship in its shops and on its ways. Now with the wide variation in ship size and changes in propulsion power, conventional shipyards are poorly equipped to build all types of vessels. Segmentation of the shipbuilding markets has begun, and may increase so that each yard can efficiently produce a limited variety of ships. As an example, almost all of the emergency U.S. shipyards of World War II were restricted in the variety of ships they produced to increase production efficiency.

The larger ships now being built would take an excessively long time to construct if erected piece by piece on the building way. Also, most work would be done outdoors and would be subject to the vagaries of weather. Automatic equipment is not easily provided to build ships by this method. Furthermore, the complications caused by extensive hull machinery and outfit installations in many modern ships would prohibit expeditious conventional shop fabrication and ship installation.

In contrast, the panel production methods of fabrication and assembly have all the advantages that conventional building lacks. However, the sequencing of each operation, to be performed at different locations as the material flows through the production line, is considerably more difficult. Elaborate schedules for starting, manning, and finishing each of the several systems installed in every compartment are essential to reduce interferences and to permit efficient utilization of men and tools. When outfit and machinery is installed in steel assemblies prior to their erection, the steel and outfitting departments must coordinate their activities to a greater degree than when all outfit is installed after the hull is erected and launched.

The production control objectives can be achieved using many techniques and tools of the trade. Critical path analyses of erection sequence, Gantt charts of production area activities, network analyses of production line flow, and work time analyses of station functions are all examples of available control and evaluation tools. Most European shipyards are using manual production control systems, and some are converting the manual systems to computer operation. The time saved and increased precision possible with computers is generally accepted as most desirable for efficient production.

American shipyards are relatively understaffed for production control, as compared with the European shipyards visited, but they utilize computers to perform many simple data processing steps. Because of the ready availability of computers, programmers, and techniques in the United States, rapid advancement in the sophistication of production control should be achieved.

Ship Design

Ships currently being designed in the United States reflect the conventional method of fabrication and erection of assemblies used by U.S. shipyards. Modern European ship designs for tankers and bulk carriers reflect the construction methods of the yard that both designs and builds the ships. Obviously, ship designs are influenced by shipyard building methods.

Many simplifications and changes in design of European ships have been effected solely to reduce building costs. For instance, furnaced plates have largely been eliminated at the bow and stern, and cylindrically rolled plates or multiple chines have been laid out to achieve

essentially the same hull underwater body shape. Transom sterns replaced cruiser sterns with their difficult cant frames. Straight deck camber and no sheer have been specified, and many brackets have been eliminated. Dual purpose main and stripping pumps and piping systems have been installed. Also, standard stiffeners have been purchased from outside sources at lower cost, rather than fabricated in the yard. These are only a few examples of design alterations that simplify the shipbuilding project and make the ship more suitable for mechanized production yards.

The large size and simplicity of design of supertankers and large bulk carriers permit these changes to be implemented. Relatively simple hulls are fabricated of large flat steel panels and assembled as shell, decks, inner bottoms, and bulkheads. Diesel engines have little auxiliary engine room machinery (compared to steam turbine powerplants), and they can be prefabricated and installed in the ship in a few pieces. The location of machinery and outfit in one area aft permits the remainder of the hull to be erected after the machinery room is built.

These ship designs are particularly appropriate for construction in the Arendal-type shipyard. Other modernized yards, such as B&W, do not benefit as much from the engine aft-layout, since the machinery room can be erected first, even if it is amidships.

The Arendal building dock with two stations, shown in Figure 4 may be suitable for building of tankers and bulk carriers. However, other ships are more complicated and have outfit throughout their length, within the bottom, and on the upper decks. The FDL(X) ship is representative of the more complicated ship design that may be attempted in an Arendal-type shipyard. The particular design of the FDL(X) would substantially determine the layout of the modernized shipyard, even if modified to incorporate some of the simplifications noted. Chapter IV describes the FDL(X) ship and its assemblies for mechanized production.

IV THE FDL(X) SHIP

The FDL(X) Description

The primary mission of the Fast Deployment Logistic ship is to operate in a forward military area, carrying equipment and cargo in a condition of readiness for rapid unloading in a friendly port or over a beach. The space requirements for stowing several landing craft and amphibious craft and a large number of wheeled and tracked vehicles govern the ship design. The landing craft must be able to float off, and provisions must be made for loading vessels by moving vehicles between decks or ramps to the transfer area. The capabilities for unloading through side ports to a wharf, or over the side by the cargo derricks, were also specified FDL characteristics. Helicoptors to be carried aboard may use the main deck aft for flight operations and for loading small vehicles and palletized cargo. A pallet lift and special holds were also specified.*

All of these specifications result in many special systems to be installed aboard the FDL(X). For example, ventilation and dehumidification systems for the vehicle cargo decks are required to permit running the engines of the many trucks. A compressed air system for tire inflation extends throughout the cargo area, as do a motor gasoline supply line from the ship's internal tanks and a fire-fighting system. The large stern ramp and its complicated operating mechanism, ballast, and dewatering systems are also to be provided. Approximately 200 personnel are necessary to accomplish the vessel operation and vehicle maintenance functions, and accommodations are to be provided.

The FDL(X) preliminary design provided by the Bureau of Ships† described a ship with the following measurements: 640 foot-overall length, 28-foot draft, 104-foot beam, 55-foot depth to the main deck, and approximately 28,000 long tons full-load displacement. The FDL(X) resembles an oversized regular Navy LPD of 17,000 tons displacement except the FDL(X) carries a small MSTS crew, has no armament, and can only accommodate a small Army Vehicle Maintenance Unit and Navy Communications Unit.

The FDL(X) design studied in this report included gas turbine engines powering an electric generator connected by cable to an electric motor for

---

* The general description adheres to the preliminary design specifications provided in the Ship's Characteristics Board Memorandum No. 69-65, SCB Project 720.66, dated June 11, 1965, Confidential.

† The drawing provided for this study was Bureau of Ships Plan No. PD-5804 dated July 15, 1965, "FDL, SCB Project 720.66-Hull Arrangement."

Preceding page blank

propulsion. Major auxiliary machinery to be installed would include ship's service generators, a distilling plant, air compressors, refrigeration and air conditioning plants, and machinery automation. These major installations, and much of the minor hull machinery and outfit, can be built, tested, and delivered complete on skids or foundations. Major equipment has been assumed to be available in this condition in order to expedite ship construction.

All of these FDL(X) requirements for machinery, hull engineering, and outfit, are in distinct contrast to the relatively few equipments installed in a bulk carrier or tanker ship. The many vehicle decks and accommodations alone far exceed the number of similar decks and spaces on the largest commercial ship. Few ferry boats or ships have as much vehicle space. For these reasons, the FDL(X) was divided into pieces that can be easily fabricated and assembled and that permit simple installation of machinery and outfit.

A section is a portion of the ship that represents a vertical slice through the ship. In the FDL(X) ship shown in Figure 6, 16 sections have been used as the basic common denominator for ship structural assemblies; each section is approximately 40 feet or less in length. The length of each section reflects the bulkhead spacing of the FDL(X) design, and the standard length of plates and shapes that can be purchased without incurring extra costs.

Assemblies are parts of sections. An assembly generally has the same length as a section, but each assembly represents a separate lift from a fabrication location in the main assembly building to a location on the hull in the building dock. There are approximately 90 assemblies in the FDL(X) ship when divided as shown in Figure 6.

The rationale for dividing the FDL(X) ship into these assemblies was rather simple. In order to use the expensive building dock as intensively as possible, and thus to erect the greatest number of ships per year, the work to be performed in the dock should be minimized. Dock work is reduced by lifting the least number of assemblies to be joined, each of the largest possible size. On the other hand, principles of structural integrity may limit the use of the largest assemblies, since each assembly must have at least one transverse bulkhead for adequate stiffness during lifting. Further, the total weight of the assembly to be lifted must be within the crane lift capacity provided.

Figure 6 is a profile view indicating the locations where the FDL(X) ship has been divided into sections and (to a certain extent) into assemblies. Such components as the stern ramp, boat davits, kingposts and masts, and other structures have not been included in the sections.

The shading indicates the use of space along the centerline of the FDL(X) ship. The fuel tanks, machinery spaces, and cargo holds below the lowest vehicle deck, or sixth deck, are lifted as one assembly for each section. The wing-walls of this ship, like floating dry docks, contain

Figure 6

FDL(X) PROFILE VIEW

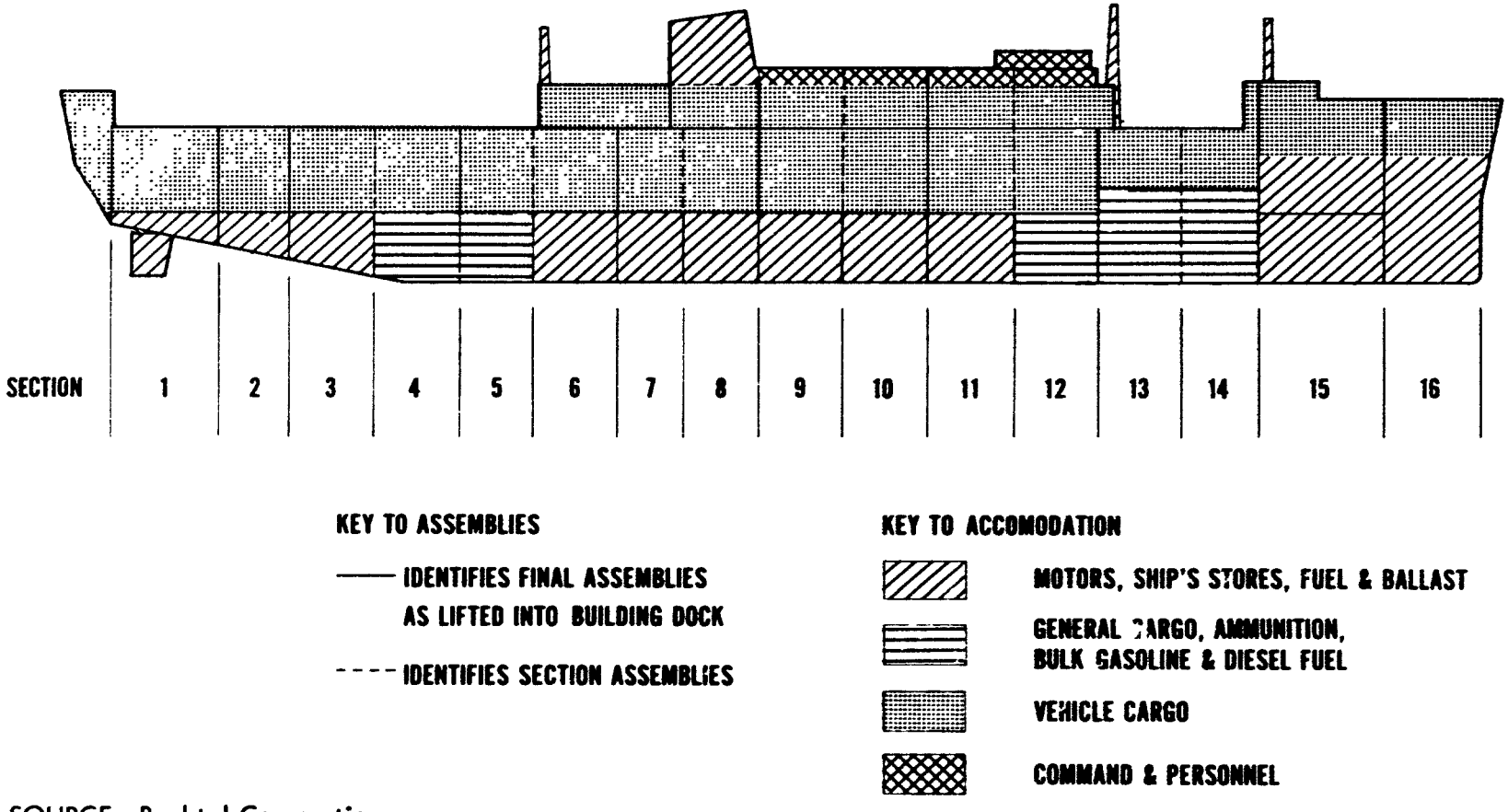

SOURCE: Bechtel Corporation

much outfit, and each side assembly is several decks high. Vehicle decks extend the length of the ship between the wing walls and are connected by ramps. Sections 9 and 10 near the middle of the ship will be used as samples of the fabrication method and erection sequence.

Figure 7 is an exploded view of Sections 9 and 10 of the FDL(X) ship. The bottom assembly, BA, extends the full beam of the ship and up to the sixth deck, 32-1/2 feet above the base line. The weights of these bottom assemblies range from 152 tons* to 367 tons for the main motor rooms without the motors. The bottom assemblies are composed of four very large subassemblies: the inner bottom and bottom shell, the side shell and side tank bulkheads and deck overhead, port and starboard, and the longitudinal bulkheads and boat deck subassembly that is prefabricated upside down and has an egg-crate structure similar to the inner bottom.

The next general class of assemblies is the side assemblies. The lower side assembly, LS, extends from the sixth deck to the main deck, about 43 feet high. The upper side assemblies, US, extend 22 feet above the main deck of the ship. All side assemblies are narrow, generally about 16 feet in the beam dimension, and may be either 40 feet or 80 feet long. The 80-foot side assembly was chosen in most cases to reduce the number of lifts into the dock, to permit the use of heavy lifts, and to increase the amount of outfit installed in the side assemblies prior to erection on the ship.

The next class of assemblies is the vehicle decks, D. Vehicle decks vary as to their location throughout the ship, but generally can be termed the main deck, MD; the second deck, 2D; the fourth deck, 4D; and the sixth deck. The vehicle deck at the sixth deck forms, however, the top of the bottom assembly. Most vehicle decks are 72 feet wide and 40 feet long, and may weigh about 40 tons.

Other assemblies in Sections 9 and 10 are the 01 deck, 01D, another vehicle deck; and a deck house assembly, DH, consisting of the 02 deck and its overhead (the 03 deck) with the hotel spaces between them. The deck house assembly does not extend the full beam of the superstructure, but fits between the upper side assemblies, similar to a vehicle deck.

Figure 8 shows four typical assemblies and indicates more detail as to the structural content of each assembly. A deck house assembly, DH; a lower side assembly, LS; a bottom assembly, BA; and a vehicle deck, D, (inverted) are shown.

The weight and identification of all assemblies are shown in Appendix A. The installed small items such as hatch covers, masts, boat davits, and similar structures are not included in that table. The steel weight of each assembly was estimated from the scantlings of LPD-type ships of similar design, and increased proportionally to the increase in ship

---

* All weight units in this report are short tons, unless otherwise specified.

Figure 7

FDL(X) ASSEMBLY ARRANGEMENT -- SECTIONS 9 AND 10

LEGEND

DH	DECKHOUSE ASSY.
US	UPPER SIDE ASSY.
LS	LOWER SIDE ASSY.
BA	BOTTOM ASSY.
4D	FOURTH DECK
2D	SECOND DECK
MD	MAIN DECK
01D	0 1 DECK

SUB ASSY. LINES

- LARGE PLATE
- VEHICLE DECK PLATE
- SMALL PLATE
- CURVED PLATE

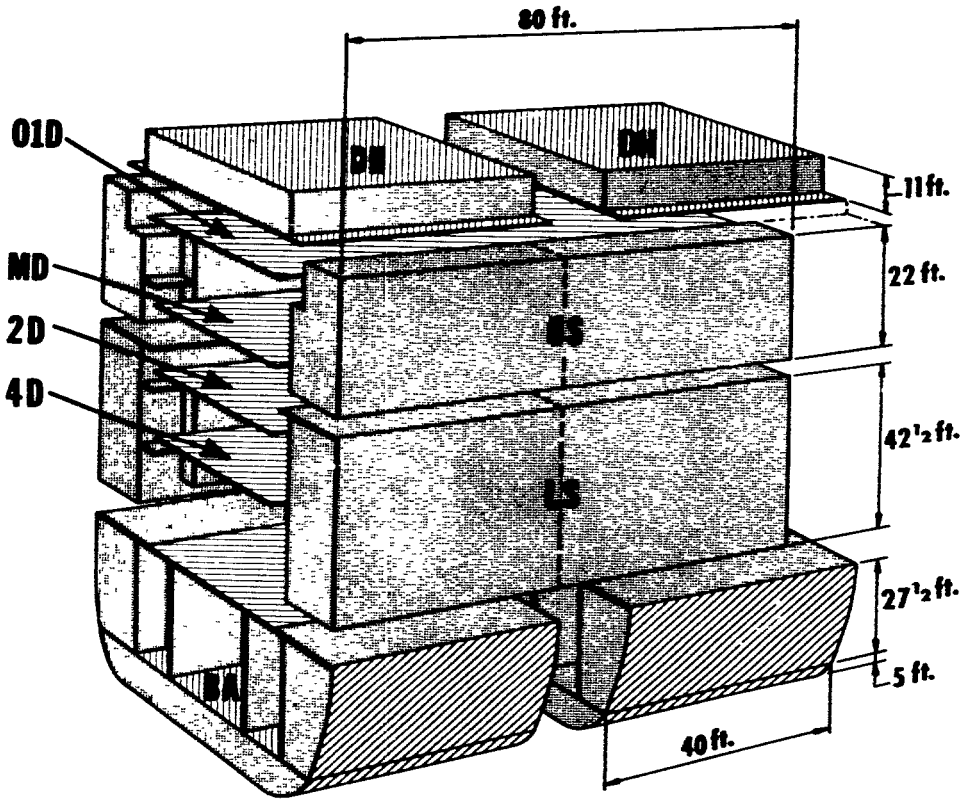

SOURCE: Bechtel Corporation

Figure 8

TYPICAL FDL(X) ASSEMBLIES

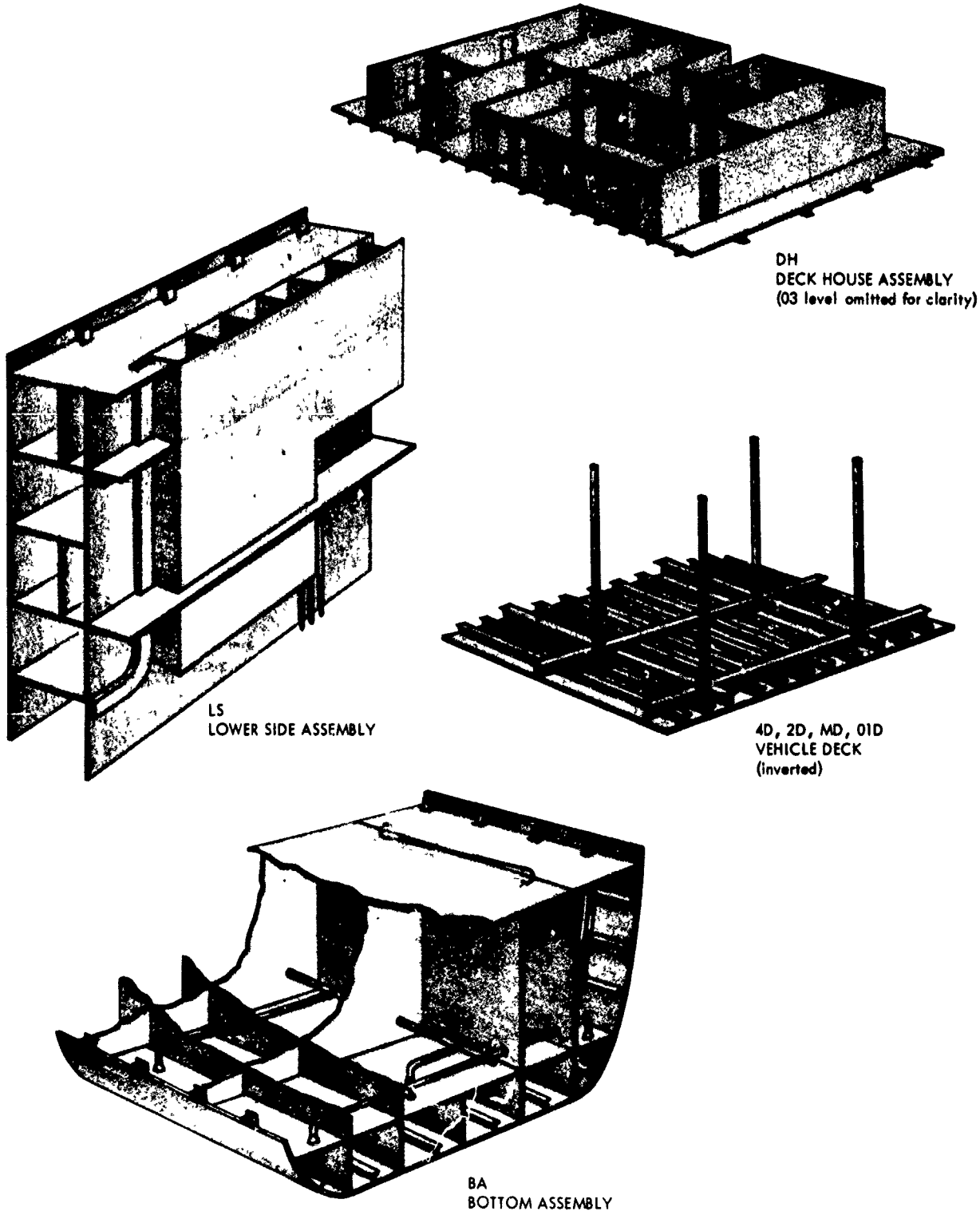

SOURCE: Morris Guralnick Associates

Figure 9

ASSEMBLIES FOR FDL(X) SECTION 10

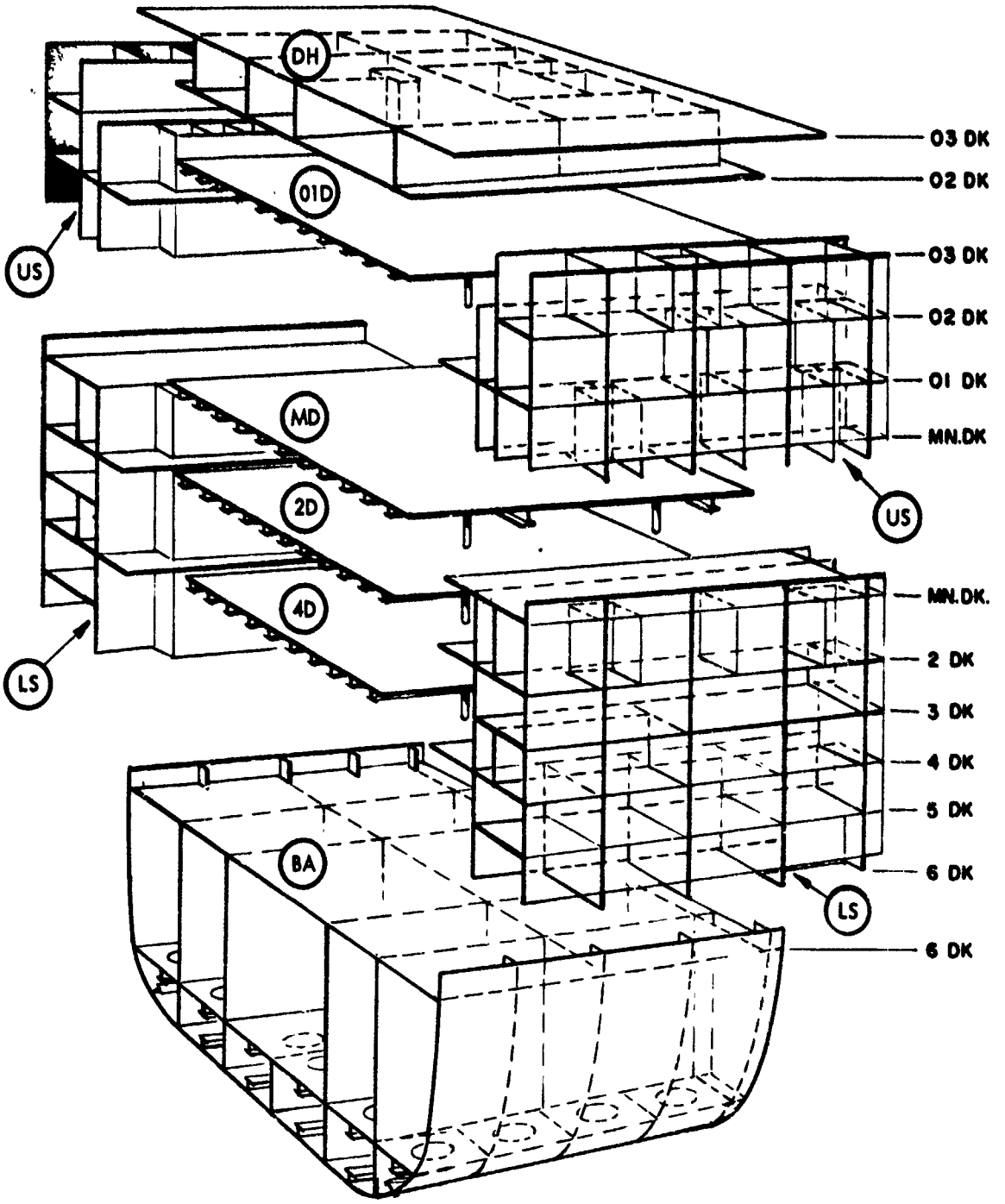

SOURCE: Morris Guralnick Associates

Figure 10

DECK ARRANGEMENTS FOR FDL(X) SECTION 10

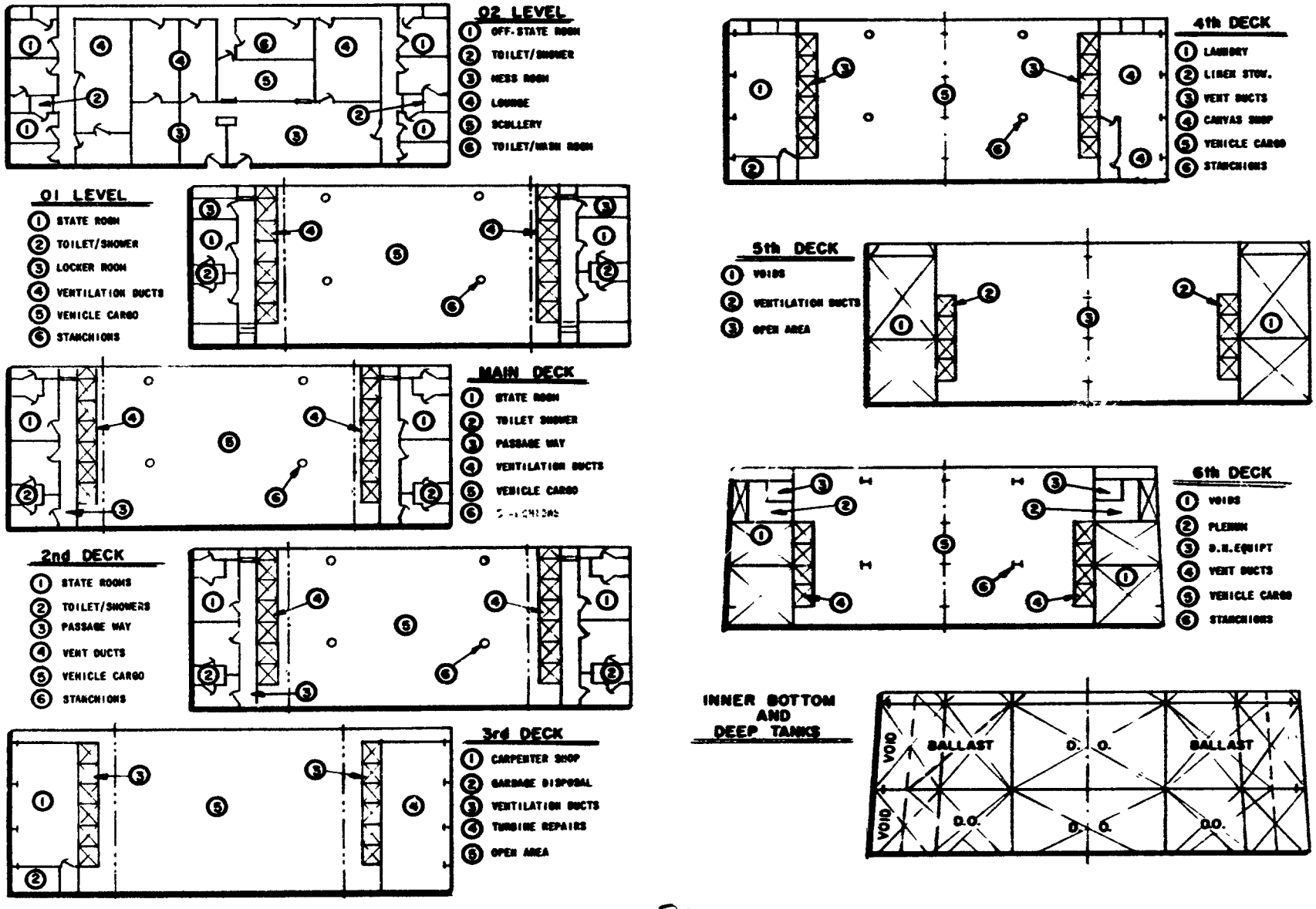

SOURCE: Marin Consultant Associates

Preceding page blank

dimension as appropriate. Weights of major items of equipment were estimated and added in appropriate assemblies. The total assembly weight of steel and major equipment was increased a small amount depending upon the assembly compartment usage, to obtain an estimate of the total assembly weight.

The shading of assemblies in Figure 7 is generally indicative of the different types of prefabrications that are needed in the different assemblies. Large panels of stiffened plate, indicated by one shading, are required for the tank top and the deck houses. Another shade indicates vehicle decks, D, almost 40 in total number. Yet another shade indicates assemblies that consist of many smaller flat panels. Each of these different size fabrications indicated by the shading are produced on a separate production line. The darkest shaded panels are curved shell panels, which are made in a different production area.

Figure 9 is a detailed, exploded view of Section 10 of the FDL(X) ship structure. The decks in the side assemblies at intermediate levels between vehicle decks are shown. The primary longitudinal framing system, with large transverse web frames or girders at 10-feet spacing, are also illustrated. Each assembly usually has four transverse girders. This construction system is useful in prefabrication of stiffened-plate panels, because the inherent structural strength of plates stiffened in both directions facilitates lifting panels to assemblies and erecting on the ship.

Figure 10 shows deck arrangements for Section 10 of the FDL(X) design. The heads on the 01, main, and second decks, designated by a number 2 in a circle, are of identical external dimensions, except in the officers' stateroom on the 02 deck level. The location of bulkheads near each section joint permits outfitting to be essentially complete on the opposite side of the bulkhead, if desired. The 80-foot side assemblies usually have five to eight compartments and a through passageway on each deck. The side assembly of Section 10, shown on Figure 10, is mated with Section 9 for outfitting and erecting in the ship.

Appendix B lists the major equipment installed in each assembly and subassembly of Section 10 of the FDL(X) design. The use of the compartments in this section has been almost completely assigned in the FDL(X) drawing and only two sections have more outfit in the sides than Section 10. The total amount of outfitting to be installed in each assembly, as illustrated by Section 10, is relatively small. Therefore, the greatest amount of work to be done in each assembly is also small and can be accomplished in a reasonably short outfitting time.

V SHIPYARD LAYOUT

A perspective view of the shipyard, Figure 11, illustrates in considerable detail the many buildings and facilities of a conceptual shipyard design. The building dock, outfitting wharf, and activity in the assembly building are prominently shown. Gantry cranes in the main aisle and the bridge cranes over the outfitting area are also shown. The three main shipyard areas are identified.

The first of these areas is the steel storage and processing area. It contains the facilities that store, prime paint, cut, and bend most of the 8,500 tons of steel used in the ship.

The second area, the main assembly building complex, is the location of panel production lines and halls where subassemblies and assemblies are fabricated. In this yard layout, five stations of the building dock are located inside the main assembly building.

The third shipyard area is for outfitting and warehousing. This is a building situated to serve ship assemblies being outfitted, to provide easy access to the ship as it is pushed out into the building dock, and to serve the ship in the final outfitting at the high wharf after it has been launched.

An office building, a cafeteria, a fabrication shop for large pipe, and the dock pump house are also shown in the foreground of the perspective drawing.

This chapter describes the functions and operations to be accomplished in building FDL(X) ships, beginning with an assumption of manufactured or purchased materials. The next three parts of this chapter describe in detail the three working areas shown in Figure 11: (1) the steel processing area; (2) the subassembly and bottom assembly areas of the main assembly complex; and (3) the outfitting area of the assembly building and outfitting shop areas and the erection of the ship in the building dock. By following this sequence of description, the flow of materials may be traced into the shipyard, through prefabrication, assembly, and outfitting, and into the ship.

Manufacture or Purchase

The guidelines for this study were briefly stated in Chapter I. The postulated, mechanized shipyard would be devoted entirely to performing those manufacturing operations that are peculiar to ship building. The yard would not provide specialized manufacturing facilities that are

Figure 11

FDL(X) SHIPYARD CONCEPT

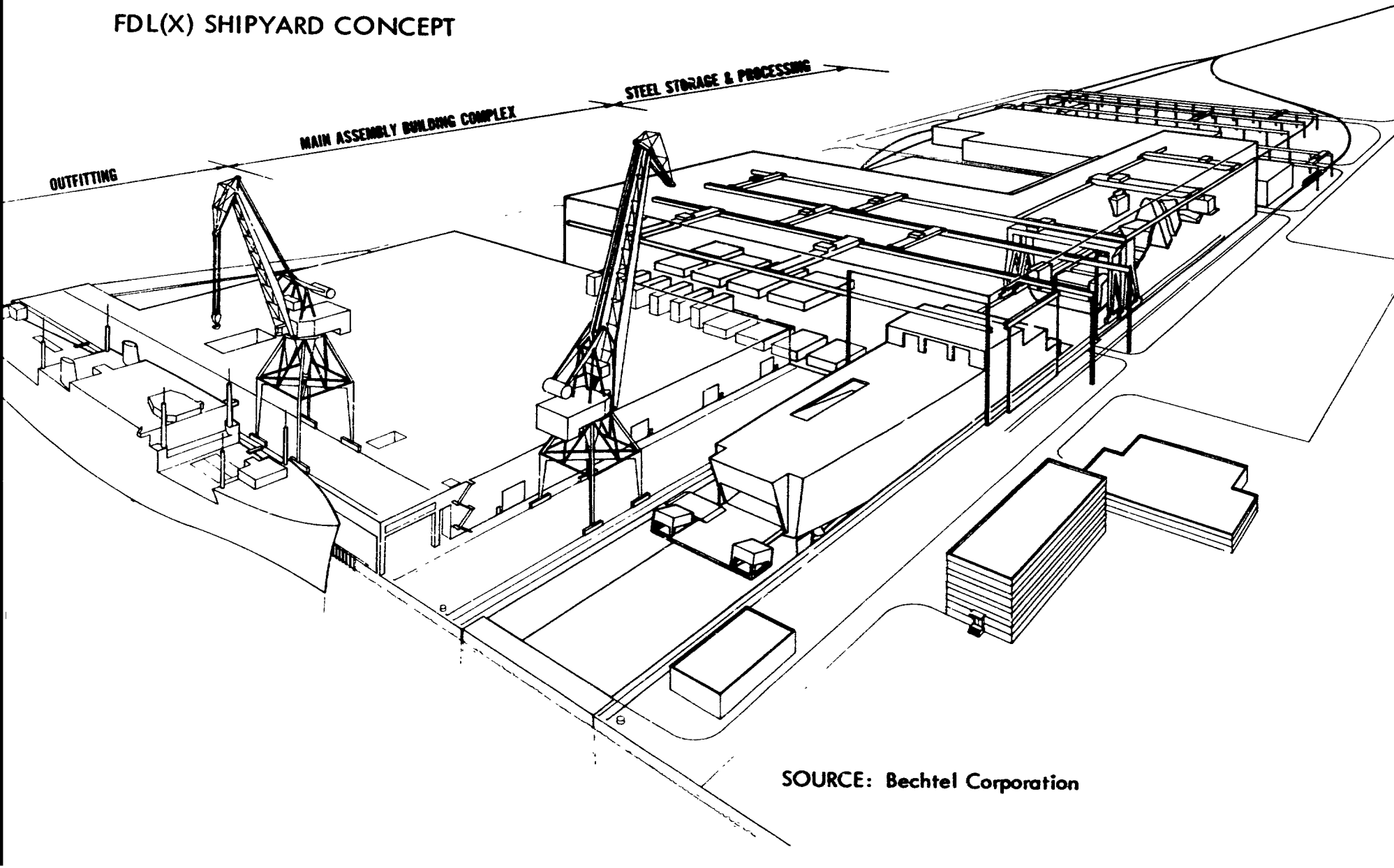

SOURCE: Bechtel Corporation

available in other production plants, especially since the utilization of these facilities would be low if geared only to the FDL(X) production rate. For example, 12 FDL(X) propellers required per year probably could not justify the cost of the foundry and machining equipment needed for their production.

In FDL procurement, many of the bidders currently own and operate shops for production of many items, including such commonly manufactured items as ventilation duct dampers and screens, furniture, watertight doors and hatches, and ladders. Other equipment less frequently manufactured in U.S. shipyards, and also assumed to be purchased, includes electrical switchboards and panels, cable stuffing tubes, winches and windlasses, waveguide, and stainless steel sinks.

Adhering to the guidelines set for this study, a list of purchased materials and a list of items to be manufactured by the postulated shipyard were developed for the FDL(X). These lists are in Appendix C and were derived from the Proposed Material Ordering Guide for the LPD 9 class of ships. No attempt was made to estimate the size or capacity of installed components.

Steel Processing Area

The steel processing area shown in the plan view of Figure 12 can be divided functionally and geographically into three spaces: a storage yard, a steel processing building, and an in-process storage area.

Storage Yard

Within this area, three separate sections are designated for flat plates, shape stock, and miscellaneous storage. Materials are generally delivered to the yard by rail car and can be unloaded by overhead bridge cranes at either end of the storage yard. All cranes in this area are 15-ton capacity with magnetic grips, and about 130-foot span. Steel plates for the FDL(X) ship are stored horizontally in the flat plate section, stacked one upon the other in piles by size and oriented parallel to the tracks. Shape stock is stored on vertical ladder-type stanchions and handled by a bridge crane with fork lift-type fingers. The miscellaneous yard is used to store heavy and uncommon plates stacked vertically between posts and handled by clamps.

The crane operators pick stock from a given location and transfer it in sequence of production to one of two conveyor processing lines, one for plates and another for shapes. A location near the head of the shape conveyor line is set aside for cutting and welding operations on shape stock, to reduce scrap losses. Ends of shapes are cut square, shapes are welded into a continuous length, and shape stock is re-cut to piece lengths specified for a particular use later in the fabrication process.

Figure 12

STEEL PROCESSING AREA

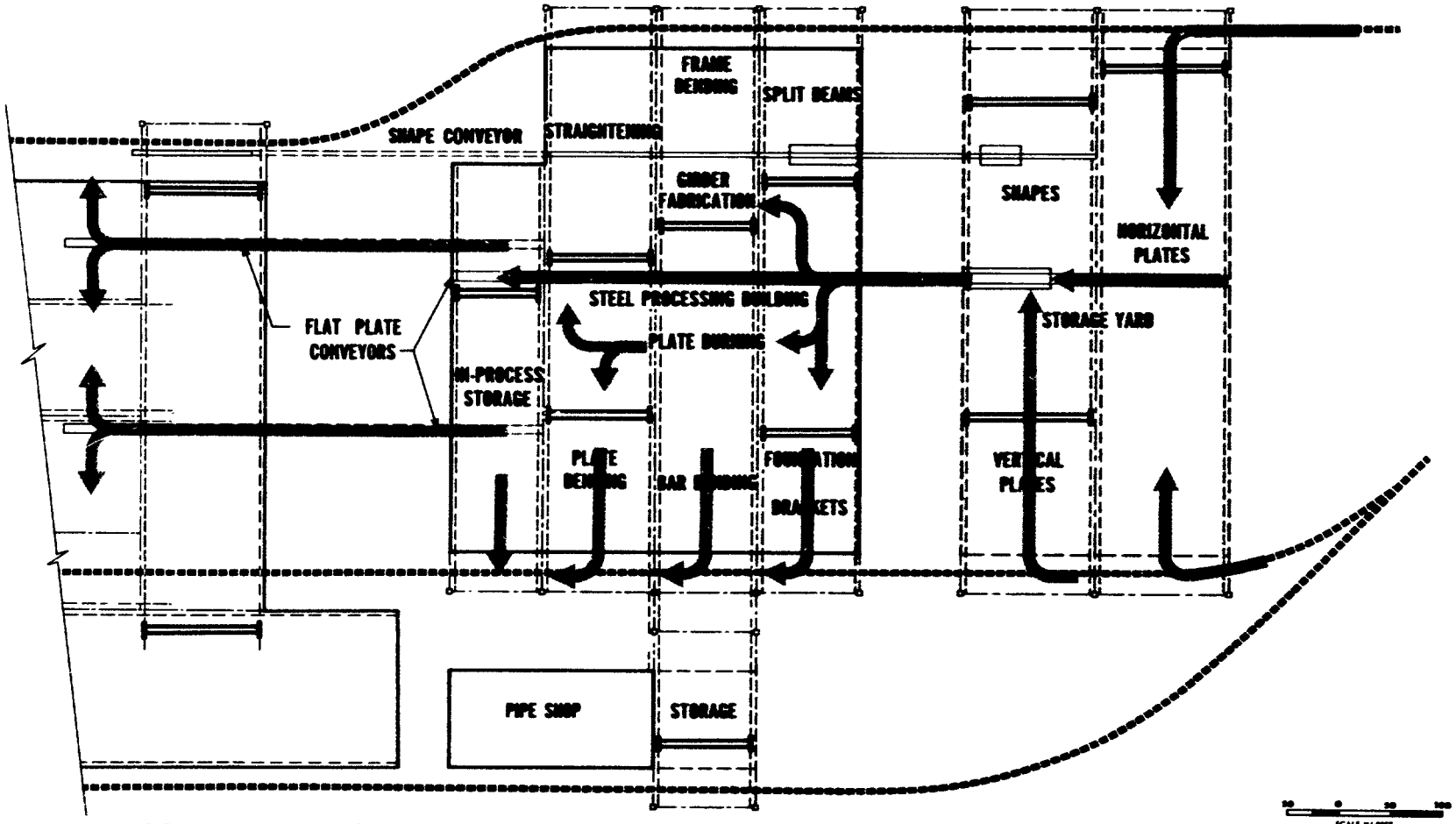

SOURCE: Bechtel Corporation

Along the plate conveyor within the storage yard are vertical sandblasting and prime paint spraying facilities and a roller/leveler.*

Steel Processing Building

A large number of machines, storage areas, and conveyor handling equipment are located in the steel processing building. Cutting is done on automatic parallel and irregular (profile) cutting machines controlled by tape or optical tracers, which can also mark plates for further bending operations. Conveyors are used for the transportation of flat material between crane bays† and to feed machines. For transfer of irregularly shaped material, and for all movements along the three bays of the building, 15-ton overhead bridge cranes are used. In addition, smaller cranes are positioned at appropriate locations to serve individual processing machines.

The shaded arrow of Figure 12 shows the general flow of plates through the steel processing area. In a bay at one end of the building, brackets, clips, and foundations are cut and welded; bent girders are fabricated in the middle bay; and plates are rolled at the other bay. Plates that are fabricated into flat or curved girders are fabricated between the conveyor lines. After fabrication, if the plate stock is bent to the extent that it cannot be carried by a conveyor, it is carried by bridge cranes out through the doors at the side of the building and by special vehicles to the main assembly buildings. Bent shapes also move out the side of the building and are also moved by vehicles. Otherwise, conveyors move flat plate stock to the in-process storage area and straight shapes to the transfer area.

Process Storage Areas

The in-process storage area for plates serves as buffer storage to smooth out imbalances in the production flow. Also, the storage area crane provides a capability to lift plates in a particular order onto a conveyor that handles material to the panel lines of the main assembly building.

The in-process storage area for the panel stiffeners and girders is in the transfer and jig loading bay adjacent to the building where these shapes are used.

---

* The need for a plate leveller is more apparent in Europe than in the United States. However, shipfitting problems are reduced if flat plate is available for processing after transportation, and purchase costs may be reduced if levelling is done by the shipyard.

† The term bay describes the space in a building between the row of columns that usually carry at least one set of rails for overhead cranes.

Main Assembly Building

Figure 13 shows the layout of the main assembly building, including the panel production lines, subassembly, outfitting, and bottom assembly halls, and the part of the building dock that is inside the building.

Panel Production

Five production lines have been designed for the fabrication of flat panels and decks. The general technique and sequence used for manufacture of deck assemblies and panel subassemblies is common throughout all of the lines, and a typical panel line will be described to indicate the degree of analysis performed.

Each of the lines has a number of fabrication stations, and specific operations are accomplished at each station. A continuous fabrication conveyor moves intermittently and stops for the same period at each station. Plates are received from the plate conveyor in a particular order at the first station as they are to be used in the production line. The first operation to be accomplished in each production line is to weld automatically a number of steel plates to one another.

Meanwhile, at the transfer area, shape stock is being loaded into predetermined spacing in a positioning jig, one for each panel line. The panel is then transferred on the wide fabrication conveyor to the next station on the line, where shapes are positioned on the plates by the jig carried by overhead crane. In the next operation and location on the assembly line, the stiffeners are welded to the plates, again by automatic machinery. Further down the line, additional stiffening members, or girders, are added to the panel or assembly, if needed.

At another station, brackets and foundations are welded for ventilation ducts, for electrical cable runs, panels, and lights, and for auxiliary machinery. Then the fabrication conveyor passes into a curtained space where cleaning and spray painting may be accomplished safely.

When operations have been completed on one side of the panel, turning the assembly over may be necessary for back welding operations, such as finishing the vehicle lashing sockets. The turnover is accomplished by a pair of 50-ton bridge cranes in the invert and transfer bay at the end of the panel lines. From the arrival of steel plate in the yard until the completion of flat panel fabrication, the orientation of plates and many shapes has not changed, which has simplified the material handling problems. The number of conveyor stations depends on the stop time, which in turn reflects the amount of work to be done. The large lines advance one station each eight hours. This description is typical of the depth of analysis performed to estimate the buildings and numbers of equipment in this yard layout.

Figure 13

MAIN ASSEMBLY BUILDING

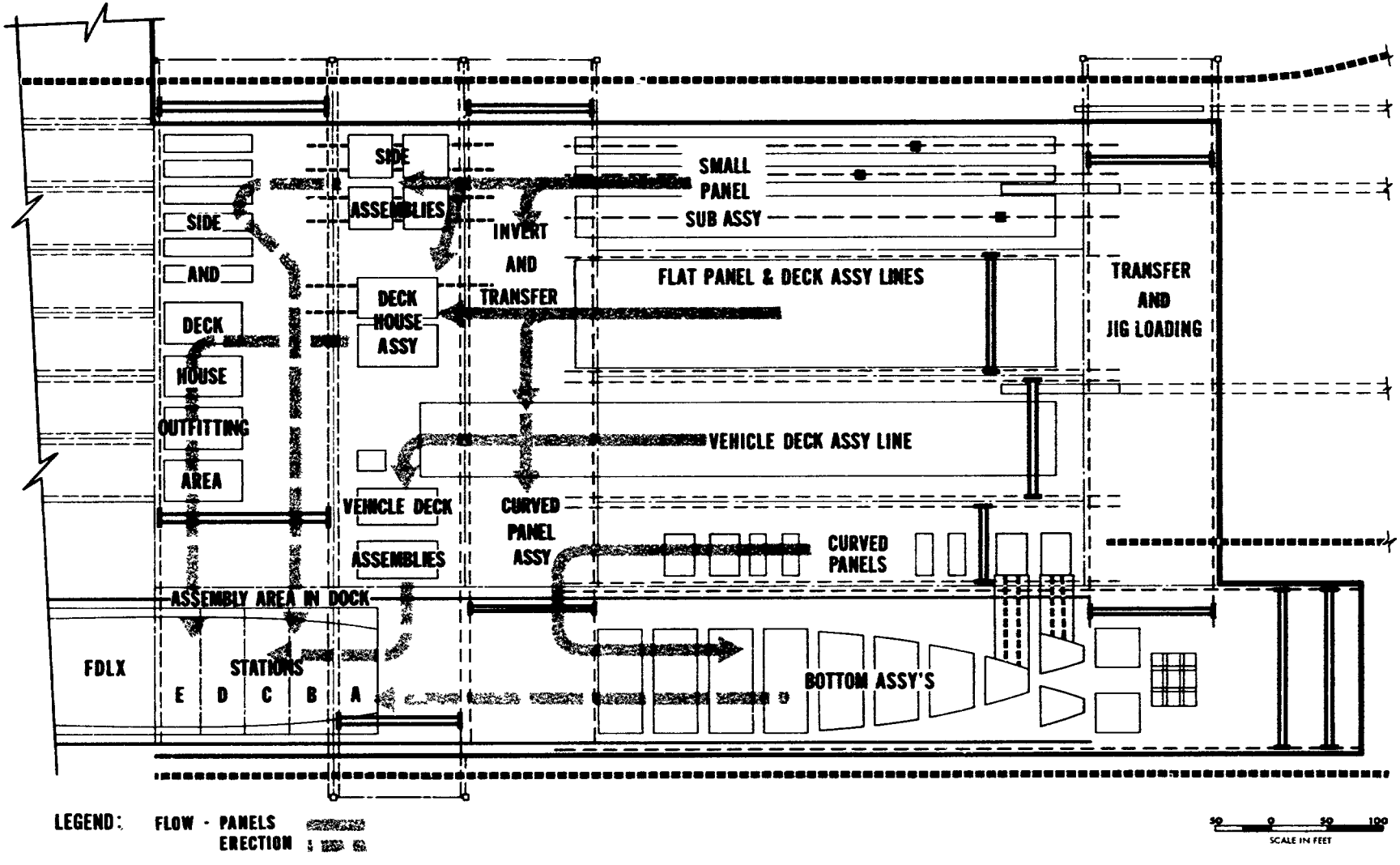

SOURCE: Bechtel Corporation

Curved panel subassemblies, such as shell panels, are fabricated in the bay between flat panel lines and the bottom assembly area of the main assembly building and are supplied by bent plates and shapes transferred by truck or rail cars from locations at the sides of the steel-processing building. Curved stock is carried by a pair of 50-ton bridge cranes from the storage location at the end of the rail line to a specific location within the subassembly area where curved shell panels may be fabricated in place.

In contrast, the flat panel production lines carry fabrications from one station to another by materiel transfer mechanisms, while the curved panels are fabricated in place on flexible or adaptable jigs that are preset to the plate contour required.

After fabrication, curved shell plates are lifted to the transfer bay at the ends of the production lines. There, curved side shell panels are placed over flat decks, the bulkhead panels are joined, and the side shell tank subassembly is sent to the bottom assembly area. A few curved shell panels are conveyed directly to the bottom assembly area for fabrication of the bow sections.

Assembly

Depending on the use of the flat panels, they may be transferred to a storage location for lift directly onto the ship, as is the case with vehicle deck assemblies. Or, the panels may be moved out of the buildings through the doors at the ends of the inverting and subassembly bays. Flat panels may be stacked on trailers and stored until needed. Or, the panels may be transferred by the pair of 90-ton bridge cranes to locations where box-type upper and lower side assemblies will be fabricated, sometimes on large weldment positioners. In the subassembly bay, panels are joined to permit down hand, semi-automatic welding, if possible. Assemblies are then finished in an upright position in the next bay adjacent to the outfitting shops where outfit installation is started. The arrows in Figure 13 represent the flow of typical panels as they are fabricated and moved for further assembly or outfitting.

A long aisle for fabrication and outfitting of bottom assemblies is shown in Figure 13. The bottom assembly aisle continues over the five covered stations in the building dock, and it is served by the same cranes that serve the bottom assembly fabrication areas. Eight locations are reserved for the fabrication of bottom assemblies, or half of the total number in the ship. The bottom shell is fabricated in place on special jigs designed for the FDL(X) ship cross-section, except for five flat-bottom midship sections. Fabrications of egg crate subassemblies are received from a location at the end of the aisle. Last, side shell tanks are placed on the inner bottom, and piping, machinery foundations, and auxiliaries installed, and painting begun. The pipe shop adjoining this area provides most of the large ballast, fuel, and other types of piping that are used in the bottom assemblies. The fabrication time for each

bottom assembly is not constant, but depends on the amount of work to be done. After the assembly is completed, it is lifted, together with its jig, into place on the ship at the proper station in the building dock.

The building height required to clear the cranes is rather low for most of the stations in the flat panel and deck assembly lines. The hook height is approximately 20 feet for bridge cranes of 15-ton capacity in the flat panel assembly areas. But 60 feet to the hook of two 50-ton cranes is needed for the curved panel assembly area for crane loads to clear fabrications in process. The main aisle of the main assembly building is somewhat taller in order to clear assemblies under construction and the hull being erected: hook heights of 80 feet in the 200-ton gantry cranes, and 100 feet for the bridge cranes are the minimum necessary.

Outfitting

The overall concept of this yard provides for installation of outfitting in assemblies before they are lifted into place in the building dock to obtain substantial savings in outfitting manpower. To reduce men and material movements, the outfitting shop has been situated directly adjoining a bay reserved for outfitting assemblies in the main assembly building, as shown in Figure 14, which partially overlaps the area shown in Figure 13. This area is particularly well located for easy access during outfitting of the more complex hotel, office, and operational spaces on the FDL(X) ship. Specifically, the assemblies that are fabricated and outfitted in this area are the upper and lower side assemblies, and the 01 and 02 deck deckhouse assemblies. Space has been allocated along the wall of the main assembly building for six 80-foot long side assemblies and all four deckhouse assemblies. These outfitted assemblies can be lifted aboard the vessel at building dock stations B through E, by the outfitting bay 125-ton cranes, operating independently of the main aisle cranes.

The material flow of outfitting items is shown by shaded arrows in Figure 14. Material arrives at the warehouse either by truck or rail and is transferred from the warehouse through the outfitting building, or if necessary around the outfitting building to specific locations directly into the ship, either in the building dock or at the outfitting wharf. The warehouse has been designed with a powered tote-track for small trucks and fork lift equipment on the ground floor, and with a bin conveyor, servicing small parts stock on the upper floor, that starts and ends on the lower floor.

Much of the activity to be accomplished within the outfitting building should be organized along production line requirements rather than along shop or craft bases. Thus, rather than advocating a machine shop as such, production items, the work-force, and their equipment should be allocated so that specific repetitive items and subassemblies can be fabricated in production lines and transferred directly to the particular assembly in which they are to be located. For example, the FDL(X) design would permit production lines for heads, to be installed in the ship

Figure 14

ASSEMBLY, OUTFITTING, AND DOCK AREA

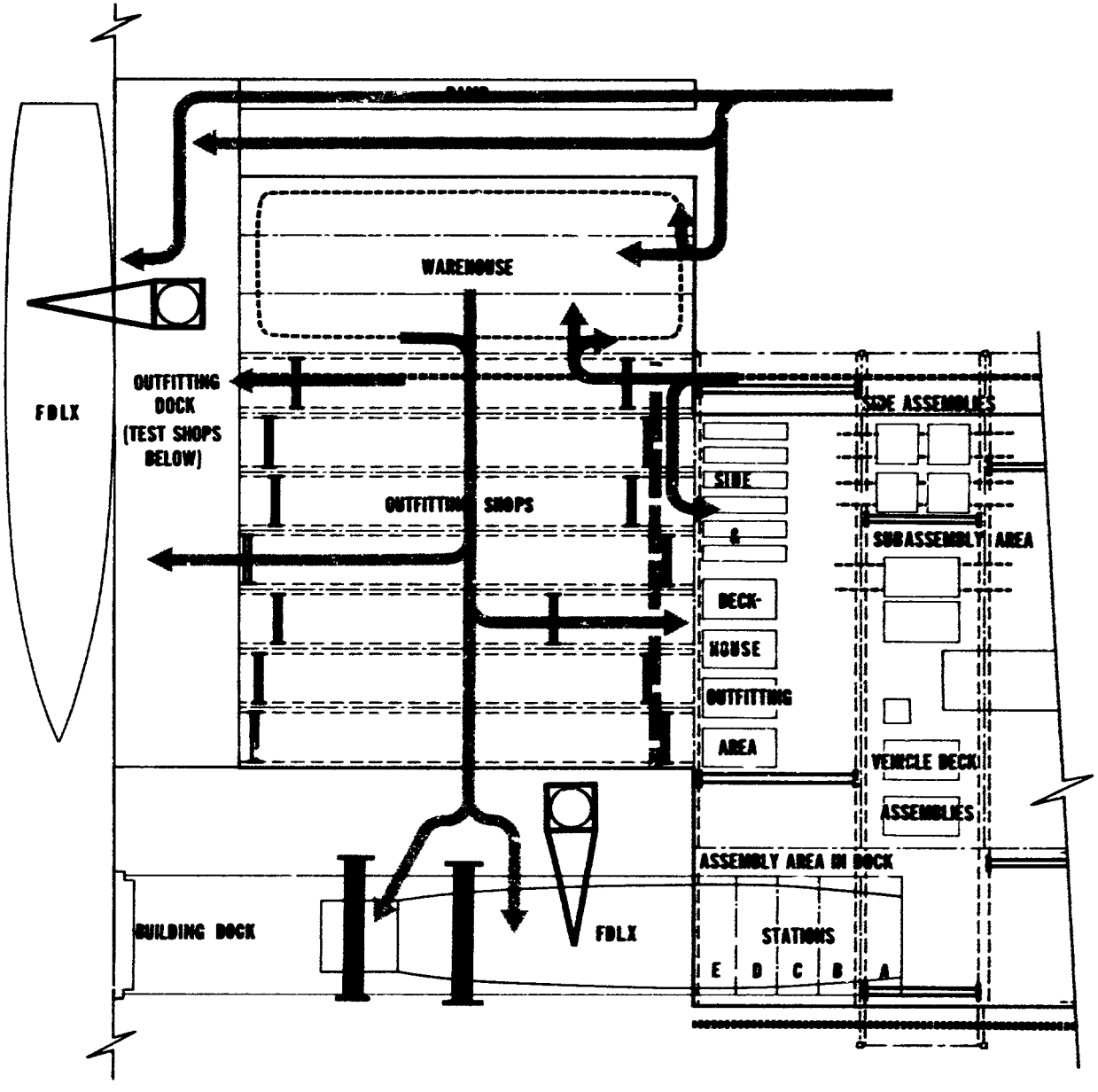

complete with plumbing and wiring, and only needing to be connected to the rest of the piping and electrical systems. Sufficient machinery has been provided to accomplish all of the operations expected in the outfitting shop.

Figure 14 also shows the two level luffing cranes that serve the building dock and the outfitting wharf for installation of masts, stern ramps, and outfit. The top of the fitting-out wharf is at a high level, approximately the elevation of the main deck of the FDL(X). The fourth deck side ports of the FDL(X) are nearly the same level as the test shops and offices on the mezzanine of the wharf. The wharf level at the surface is sheltered, is an extension of the outfitting shop bays and has crane and truck service. A vehicle ramp provides access from the surface elevation to the upper level.

Erection

The following will describe the FDL(X) ship in the erection process and its movement out of the building dock within the main assembly building. Figure 15 shows the FDL(X) ship at a particular stage in its construction called period nine, as an example of the assembly sequence. There have been eight pushes of the ship out of the building prior to this particular stage in its erection, and the ninth push work is about to take place. A small crew is called at the end of work shift 27 on the ship for two to four hours to operate the hydraulic pushing rams and install the new sets of sliding ways for the next erection operations.

The five 40-foot long stations in the building dock, lettered A through E are shown along the bottom of Figure 15. Although there are some rather minor deviations to the use of each of the stations, Figure 15 also indicates the station where each different assembly type is placed. Bottom assemblies are generally lifted by the 200-ton travelling gantry cranes in a lengthwise direction from their fabrication area in the main crane aisle to the building dock at Station A. Lower side assemblies are generally lifted by the 125-ton bridge cranes to stations B and C when they are 80 feet in length, and to station B in the case of 40-foot lengths. The vehicle decks are moved to the assembly area for addition of pillars, then stored at the head of the building dock, and finally lifted on at station C. Deck house assemblies and upper side assemblies that are fabricated and outfitted in the outfitting area are lifted by a pair of 125-ton, 160-foot span, double-hook bridge cranes into the building dock and are placed on the ship at stations D and E.

During this ninth period, the lower side assemblies (both port and starboard) of sections 9 and 10 have been lifted in at stations B and C; the bottom assembly of section 11 has been placed at Station A; the lower part of the stack and the 02 deck assembly of section eight--and the ramps also associated with section 8--have been lifted in at Stations D and E; and the fourth, second, and main deck vehicle decks of section 9 have been erected at Station C. In the next period, section 10 vehicle decks, and section 12 bottom assemblies will be placed aboard.

Figure 15

FDL(X) STATION ACTIVITY

46

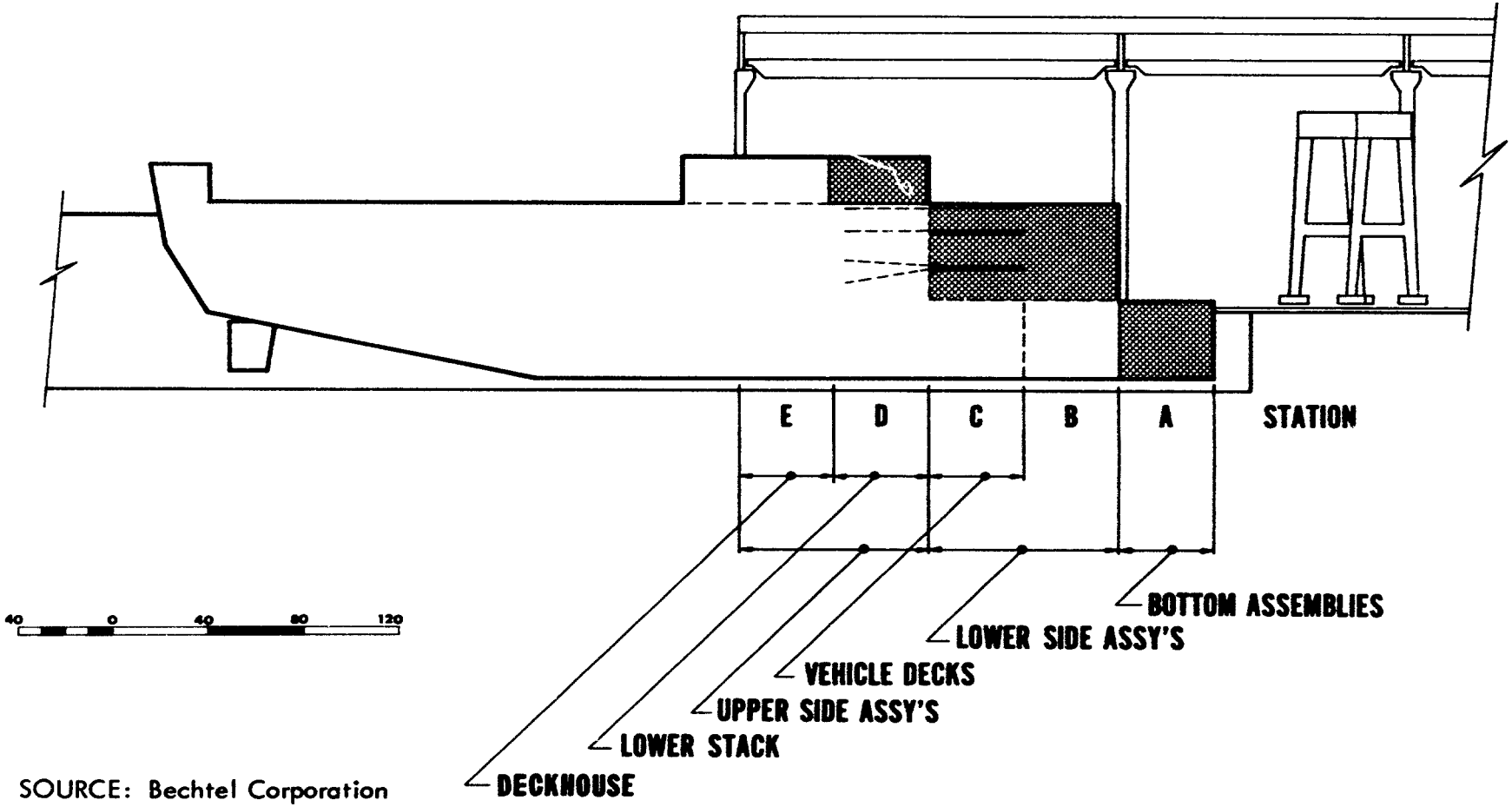

SOURCE: Bechtel Corporation

Figure 16 shows a part of the erection schedule for the FDL(X) ship, including the period of time immediately preceding, during, and after that illustrated on the previous Figure 15. (The complete assembly schedule is shown in Appendix D.)

The schedule in Figure 16 shows the five stations in the building dock along the left margin, and the passage of time across the chart in a horizontal direction. The schedule includes only the three time periods numbered eight, nine, and ten, and 7 work shifts numbered from 23 to 29. The point in time shown on the previous Figure 15 is at the end of the 9th period and shift 27.

This schedule was developed for each of the 90 lifts of assemblies or main equipment that are required to construct the FDL(X) ship. Each lift was analyzed by estimating the crane time and the welding time required for the assembly. The crane time includes the time required to hook up, lift, move, set down, and, where necessary, to hold the assembly while it is sufficiently welded to the adjoining structure for the crane to release it. The welding time is the minimum required before the next assembly can be lifted into place, or before the ship can be pushed. For example, during the ninth period, the critical time results from certain operations accomplished in sequence by the outfitting bay cranes. First, the cranes must lift the port or the starboard section 9-10 lower side assembly into Stations B and C, and hold it until it can stand by itself. Then, the crane returns to pick up the other lower side assembly and lifts it into place. Both lower side sections must be welded substantially into place before a vehicle deck can be fitted between them. Then the three vehicle decks of section 9 are lifted into Station C, in sequence from the fourth deck through the main deck, and each is tack welded before the crane can lift the next deck. The erection schedule was derived in this amount of detail to lay out the shipyard as a balanced, workable concept. The number of relatively complex assemblies to be lifted aboard indicates that five covered stations--approximately one-third of the ship's length--may be desirable in the building dock to expedite erection of the hull.

Operations for gantry cranes that lift the bottom assembly need not be scheduled as carefully during period nine as the outfitting bay bridge cranes. In certain other periods, the large gantry cranes are heavily used and may determine the rate of erecting assemblies. If more cranes were provided over the building dock stations, different erection sequences would become critical, and the total time between ship pushes would be only slightly decreased, since pushing is not done during a work shift.

If the ship were not moved in the building dock but built in place (as at Burmeister and Wain's), crane service must extend a longer distance, but the space required for building assemblies and panels in the main assembly building would be the same as shown before. In addition, covering the entire building dock to provide shelter over all the erection stations would be expensive; however, the cost of the pushing mechanism would be saved. Burmeister and Wain's single building dock is well

Figure 16

FDL(X) SHIP ERECTION SCHEDULE (PARTIAL)

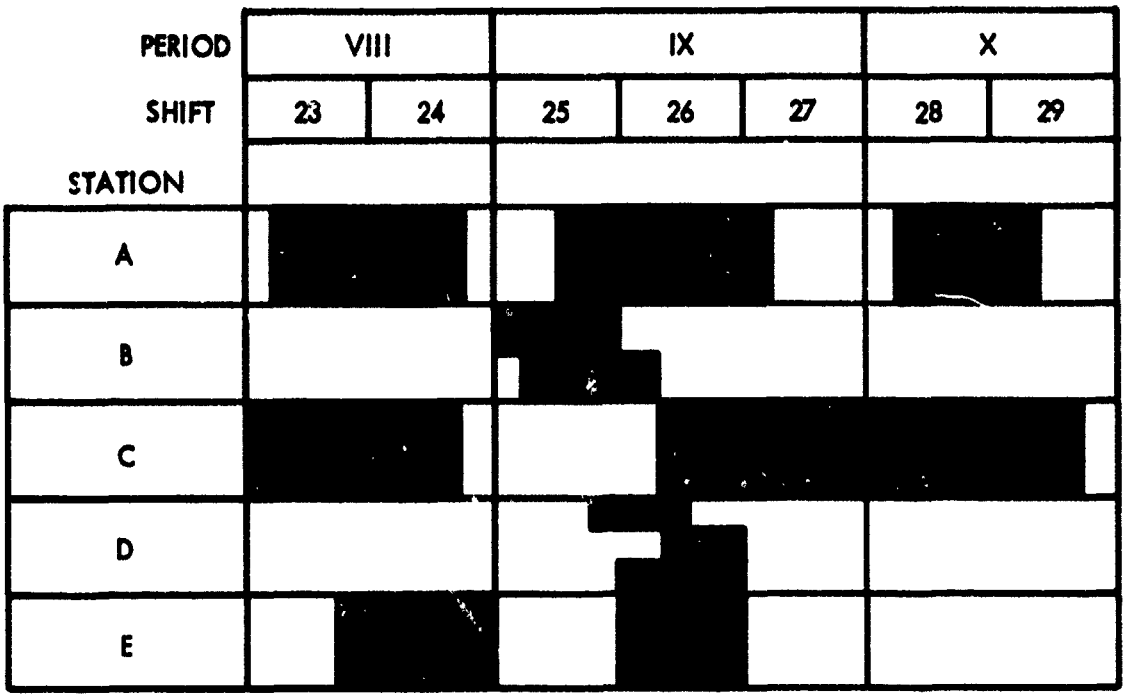

SOURCE: Bechtel Corporation

separated from the assembly hall, but is laid out without cover. Many shipyards admit to about 15 percent loss of productivity when working in the open under normal weather conditions compared with indoors; under very poor conditions, work must stop. Therefore, by covering 200 feet of building dock, the postulated yard is able to erect all assemblies under cover.

Completion

As the ship is extruded stern first from the main assembly building, the hull machinery, electrical and electronic equipment, and outfit can be connected and completed. The stern ramp and masts can be installed by the portal cranes. The ship is accessible through the stern gate and the side ports. A hammerhead crane may be placed on board for lifting light tools and equipment. After the jigs are removed, hull painting may be accomplished from a pair of powered rolling stages. Installation of rudders, shafts, and propellers may be expedited with special crane trucks, although about 30 days time is available to accomplish these tasks before launching.

After launching the FDL(X) by flooding the building dock and removing the gate, the ship is towed to the outfitting wharf where the final tests are made.

The total time for fabricating an assembly and installing outfit varies for each assembly, depending upon the complexity of the assembly, the amount of outfit, and time and place of erection in the ship. For example, the time available for assembly of panels and installation of outfit in deck house assemblies is 40 days prior to erection in the ship. Approximately two to eight days after erection of the deck houses, the ship is floated and moved to the outfitting dock for completion.

The time available for installation of outfitting in the upper and lower side assemblies varies from 3 to 20 work shifts, more time being allowed for difficult machinery compartments at the outfitting building area. After erection in the ship, at least 14 work shifts are available before the ship is floated, and more shifts can be worked at the outfitting wharf prior to sea trials.

The bottom assemblies are in fabrication prior to placing the first sections of each ship in the building dock. The motor room bottom assemblies of section 6 may be fabricated and outfitted in about 25 working shifts prior to erection in the building dock, and an equal length of time is available before launching to complete the motor room installation.

In summary, the total time available to install machinery, electrical equipment, and furnishings is expected to be adequate for orderly completion of the FDL(X) shortly after launching. Allowing time for testing and sea trials, each FDL(X) should be delivered prior to launch of the subsequent ship. Therefore, only one berth has been provided at the fit-out wharf.

Shipyard Layout

Figure 17 is the complete yard layout and includes some of the other peripheral buildings and activities that have been included to complete the conceptual yard design.

The rail lines shown on the layout of Figure 17 serve both sides of the main assembly complex, both sides of the steel processing area, and possibly the steel scrap yard. Some of these lines can be used for transfer of materials between buildings; other spurs can be used for delivery of equipment and supplies from outside the shipyard. Especially heavy equipment, such as the main drive motors for the FDL(X) ship, can be lifted directly from a rail car into the main assembly building.

The conveyors that carry material from the steel processing building to the main assembly building are underground to allow a road to pass between the buildings. Additional space has been left for possible future expansion of buildings between steel storage and steel processing areas, and between steel processing and main assembly buildings. The steel processing and pipe shop buildings may also be extended at the ends, and another bay may be added to the side of the main assembly building.

This layout probably is not an optimal arrangement, but simply one alternative selected to provide all the necessary production equipment and space, linked by suitable handling equipment along material flow lines for FDL(X) construction. Other layouts and equipments can be conceived that should also achieve the same purposes, and alternatives should be evaluated carefully before proceeding into construction of a new shipbuilding plant.

Figure 17

SHIPYARD LAYOUT

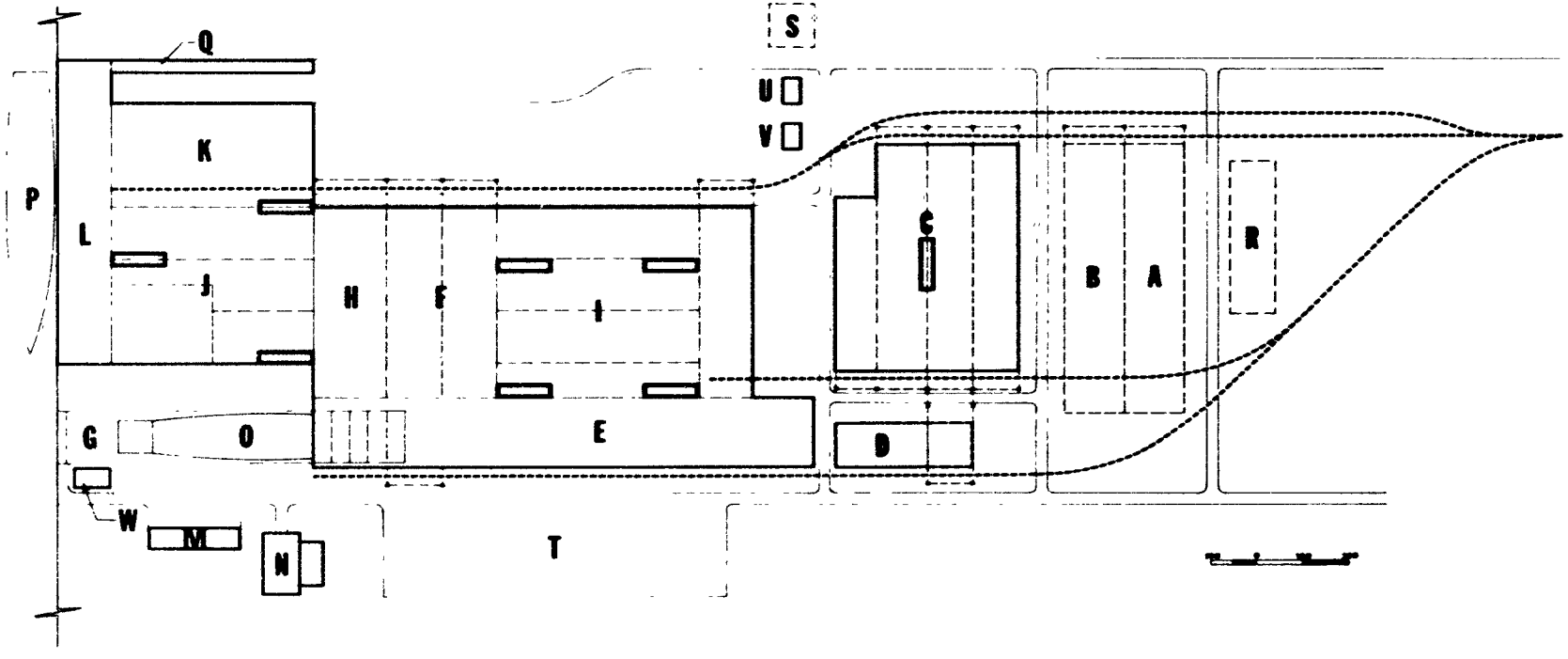

A PLATE STORAGE	G BUILDING DOCK	M OFFICE	S POWER SUB-STATION
B SHAPE STORAGE	H OUTFITTING AREA	N CAFETERIA	T PARKING AREA
C STEEL PROCESSING	I PANEL PRODUCTION	O SHIP UNDER CONSTRUCTION	U OXYGEN STORAGE
D HEAVY PIPE SHOP	J SHOPS	P SHIP BEING OUTFITTED	V ACETYLENE PLANT
E ASSEMBLY HALL	K WAREHOUSE	Q RAMP	W PUMP HOUSE & WATER TREATMENT PLANT
F SUB-ASSEMBLY AREA	L OUTFITTING DOCK	R SCRAP YARD	▭ LUNCH, LOCKER & TOILET

SOURCE: Bechtel Corporation

VI CONCEPTUAL SHIPYARD DESIGN AND CONSTRUCTION

The facilities of the mechanized shipyard are designed to accommodate, in an economic and flexible manner, the mechanized manufacturing operations, storage, and administrative functions required for the conceptual layout described. To optimize the facilities plan was not feasible within the scope of work and study time allowed. The conceptual layout represents the first approach to the problem of balancing conflicting production requirements and facility costs, and it is only one of many possible alternative layouts. Other plans are expected to be superior.

The cost estimates and construction schedule were developed on the assumption that all preliminary industrial engineering and naval architecture has been completed, that the site has been selected, and that all equipment requiring a long lead time has been ordered promptly to avoid delay in completion of construction. This program would produce shipyard facilities for a minimum capital cost and on a time schedule established to minimize cost. Final shipyard design, equipment procurement, and construction proceed on an overlapping and, at times, simultaneous schedule.

The order of magnitude cost estimates shown on Table 1 are based on factoring similar types of construction, and not on a detailed take-off material quantities from engineering drawings. Prices for some of the production machinery were obtained from manufacturers. Contingency allowances of varying amounts have been included, depending on the engineering detail available and the potential variation that could develop. The costs shown are realistic estimates for the scope of work described, at current 1965 prices without escalation for future price increases. Construction work is assumed to be done on a straight-time basis without acceleration of equipment procurement.

Computer and communications equipment and gas storage facilities are assumed to be furnished under supply contracts, and therefore their costs are not included. Engineering design costs are included in each item for final working drawings, calculations, and procurement specifications on the assumption that preliminary facility engineering has been completed and a set of design criteria has been previously established.

The capital improvements and equipment included in the cost estimate are only those needed to produce ships of the general size and description of the FDL(X) but does not include special tooling or special test equipment designed exclusively for use on a particular ship design, or general ship checkout and test equipment. Also excluded from the cost are spare parts for equipment, hand tools, and automation equipment not described in this report for production lines.

Preceding page blank

Table 1

MECHANIZED SHIPYARD COST ESTIMATE

Buildings	Dimensions	Cost (thousands of dollars)
Service buildings	80,000 sq. ft.	$ 1,900
Plate and shape storage		600
Steel processing	520' x 400'	2,900
Pipe fabrication and storage	300' x 100'	500
Panel production area	560' x 440'	5,300
Main assembly including transfer bays	1,100' x 160' + 400' x 40'	10,200
Warehouse and maintenance areas	440' x 240'	1,500
Outfitting shops	400' x 360'	4,100
Subtotal		$27,000
Docks		
Dry dock		8,300
Outfitting wharf		2,700
Subtotal		$11,000
Materials Handling Equipment		
Conveyors		2,100
Overhead cranes		7,500
Mobile equipment		1,400
Subtotal		$11,000
Production Machinery		
Mechanical and electrical		27,000
Site Development		4,000
Total		$80,000

Source: Bechtel Corporation

The considerable investment--$80 million--in this type of yard indicates intensive operation is economically desirable to reduce the amortization burden per ship to the minimum. A two-shift operation of the one-dock yard would therefore appear preferable to a two-dock yard operated for one shift if production of up to 12 ships a year is required. Some of the equipment would not be operated on the second shift. Should a production level between 12 and 24 ships a year be needed, the cost of a two-dock yard is estimated to be $144 million, roughly an 80 percent increase for those facilities needing duplication.

Sites Conditions and Development

As shown in Figure 18, the facilities for a shipyard with one building dock can be built on a rectangular site with about 3,500 feet inland depth and a waterfrontage of about 1,750 feet, an area of approximately 140 acres. Land acquisition costs are not included in the estimate because of wide price variations and the possibility of making lease arrangements for land. (In order to provide sufficient space to double the size of the facility, the waterfront should be doubled to nearly 3,500 feet on the initial purchase.) Fencing of the two-dock yard perimeter is included in the one-dock yard estimate.

The site topography is assumed to be a few feet above sea level, fronting navigable water with an average tidal range. The existing beach was assumed to slope from the shoreline to a depth of 35 feet at a distance of 700 feet offshore. After construction of the cofferdam for the building dock and the bulkhead for the outfitting dock, dredging to a depth of 35 feet is included for a waterfront distance of 1,200 feet. Subsoil is assumed to be permeable alluvial deposit, with a lower clay-bearing stratum. Soil-bearing values permit the use of spread footings for minor buildings and the construction of floor slabs on grade, but major buildings require piling to clay. Significant variations in site development and dock costs could occur with different site conditions.

After clearing and removal of topsoil, rough grading for adequate surface drainage is assumed to be balanced cut and fill without importation or dumping. Preparation of subgrade soil for areas to be paved or used for railroads and yard storage is assumed to require a layer of compacted granular fill. Drainage is in open ditches, except where pipe culverts are needed for crossing roads and railroads.

A heavy-duty highway and a railroad line are assumed to be available at the site boundary. Extension of the railroad is assumed with rail at 100 lbs. per yard and a maximum curvature of 16°. Barge and towing services are presumed to be available at the wharf. Roads are generally heavy-duty asphaltic concrete paving, 24 feet wide with minimum 50-foot radius bends. Parking for 1,500 cars is included on the basis that shifts are staggered sufficiently to avoid doubling the space. All paving cost is estimated at $200,000.

Figure 18

SHIPYARD SITE DESCRIPTION

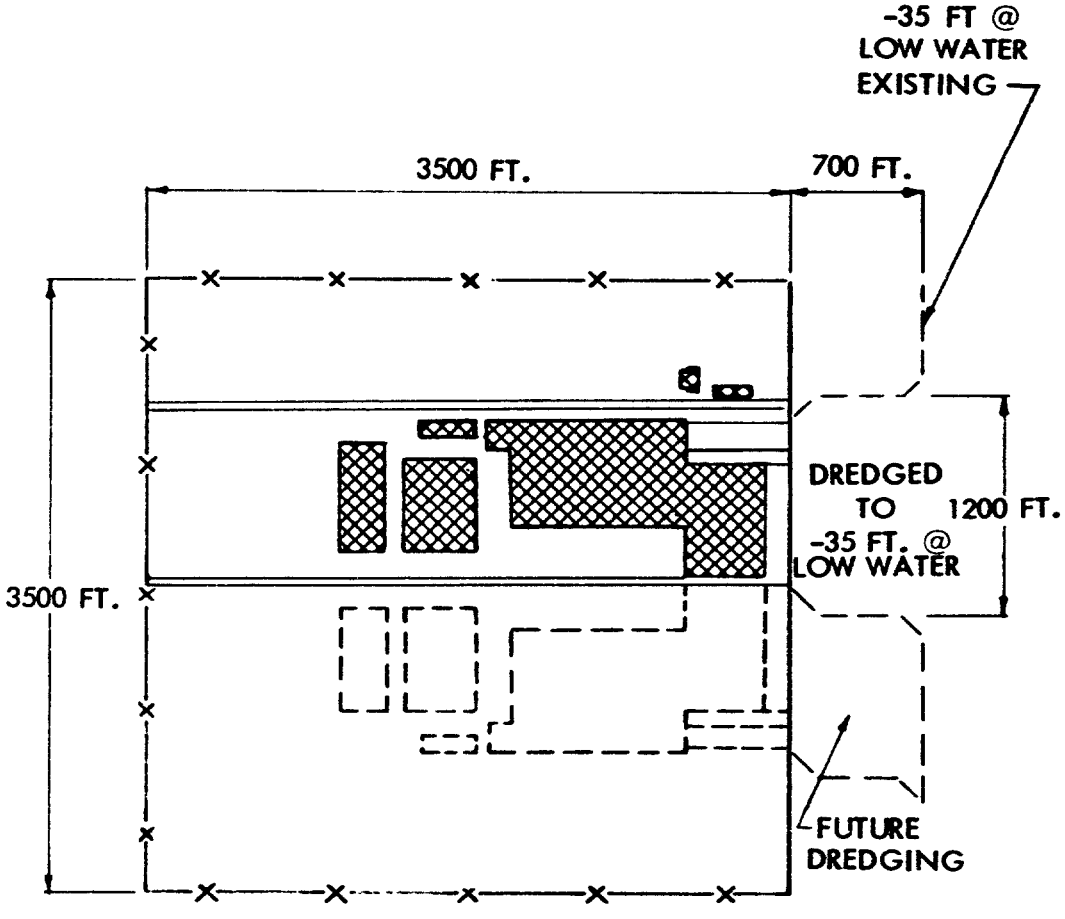

SITE ASSUMPTIONS

1. AREA 250 AC
2. GRADE ELEV. BETWEEN +5 AND +10 FT. ABOVE H. W.
3. SUB-SOIL-ALLUVIAL DEPOSITS REQUIRING PILING TO BEAR ON CLAY AT -50 FT.
4. UTILITIES, ROAD AND RAIL AVAILABLE AT PROPERTY LINE
5. LOCATED ON N.E. COAST OF UNITED STATES

INITIAL DEVELOPMENT

FUTURE EXPANSION 100%

SOURCE: Bechtel Corporation

A theoretical site on the Middle Atlantic to Northeast Coast area was selected as being conservative from a cost standpoint, i.e., more weather protection may be needed there than on the Gulf Coast, and because the Arendal principle is designed for ship erection under cover. Design factors assumed the following:

Wind:	Maximum velocity--100 mph
Rainfall:	30 inches per year average
Snowfall:	40 inches per year average
Air Temperatures:	Maximum summer 100°F Minimum winter 10°F
Humidity:	Average 80%
Earthquakes:	Seismic probability--Zone 1, minor damage

The site is assumed to be within commuting distance of both construction and shipyard labor, and the immediate surroundings are assumed to be compatible with shipyard operations.

Sanitary and storm water drainage is assumed to be collected, treated, and disposed of through yard systems independent of outside facilities. A gravity collection system for treatment of sewage in a packaged aeration unit and an effluent pump station are located near the center of the waterfront.

Utility supplies are assumed to be available at the property line without charges for extension. Within the shipyard, main utilities need to be distributed, and costs are estimated from the descriptions that follow:

A main power transformer station converts and meters the incoming overhead electrical supply for underground distribution to the yard. Local transformer and switchgear stations are provided to supply power circuits for welding machines, motor centers, and lighting. A ring water main supplies all process and domestic requirements and fire protection needs. A ring main supplies natural gas to each building for space and furnace heating. Air compressors and after coolers with distribution systems and equipment are located in each main building, and interties are provided to adjacent buildings for flexibility in case of breakdown. Liquid oxygen is assumed to be stored at a central location, where it is vaporized and distributed by pipe to each building.

The cost estimate included an acetylene gas manufacturing plant at a central location, with gas distributed at low pressure to the buildings where it is needed for burning operations. Alternate gas systems could be provided when the total cost of purchases and operations may be more economical than an acetylene gas system.

Yard maintenance and protection vehicles costs are included in the site development category.

Docks

The building dock is designed to provide a clear space 750 feet long, 120 feet wide, and 35 feet deep below high water. Pumping equipment is provided to dewater the dock in eight hours after launching; however, the $400,000 cost is included under production machinery. Capstans, winches, and bollards to assist in maneuvering ships out of the dock are included in the cost estimate. The gate is a floating caisson type, with controlled ballasting to maintain trim in transit, and cost $900,000 installed.

Construction is planned inside a dewatered excavation protected on the water side by a steel sheet pile cofferdam. The dock is assumed to be a fully relieved, reinforced concrete structure, with drains below the floor and behind the walls to prevent the build-up of hydrostatic pressure when empty.

The pushing mechanism is used to extrude the ship from the assembly building into the uncovered portion of the building dock as the ship erection proceeds. Erection of the next section of the ship is begun by lowering the appropriate bottom assembly and jig onto the sliding ways at Station A of the building dock within the assembly building. Thirteen push operations are required for the FDL(X) vessel erection, and each push moves the erected portions of the ship a total of 40 feet. After each push operation, sections of sliding ways are placed on the five rows of fixed ways at the vacated Station A. Both the fixed and sliding ways are equipped with teflon pads at their bearing surfaces to reduce friction and thereby minimize the force required to extrude the ship.

The pushing mechanism employs a hydraulic system consisting of five 300-ton jacks supplied by a common header, two high-pressure positive displacement pumps, an oil reservoir, and suitable piping and valving to permit ejection and retraction of the jack rams. The hydraulic jack cylinders abut a large reinforced concrete mass at the head of the building dock, and the ends of the rams are attached to a strongback which evenly distributes the pushing force to the ends of the five sliding ways. Hydraulic jacks with 12-inch diameter cylinders require a maximum oil pressure of approximately 5,500 psi to develop the maximum thrust. A 10-gpm pump will push the ship at a rate of about four inches per minute.*

Stability considerations for the hydraulic rams may limit the length of stroke of the rams to about 10 feet. After each 10-foot push, therefore, the rams must be retracted, 10-foot sections of sliding ways inserted

---

* A hydraulic pushing mechanism is employed at the Arendal yard of Götaverken, which claims to have patents on the operation. The extent of these claims, or details of the Arendal mechanism, are not known.

and secured to previously installed sliding ways, and then the push can be resumed. Four separate operations are therefore required to accomplish the total 40-foot length of push.

The cost of the pushing and sliding mechanism unique to the Arendal principle was estimated at $1 million.

The outfitting dock superstructure is a composite construction of precast and prestressed concrete beams and columns, with poured-in-place concrete deck slabs. The lower dock level is supported on prestressed concrete piling with a pile bulkhead wall, backfilled with spoil from the building dock excavation. Shock absorbing fenders, mooring bollards, traveling crane tracks, and floodlighting systems are among the equipment installed on the outfitting wharf.

Buildings

The types of building construction assumed for the shipyard cost estimate are typical of heavy manufacturing plants in the United States. The number of buildings is limited to as few separate units as possible, each having as much potential for expansion and rearrangement of production equipment as can be provided economically. The three basic building types are manufacturing facilities, outfitting shop and warehouse, and administrative offices.

The manufacturing buildings are multiple-bay, welded steel-frame structures that support overhead bridge cranes and steel deck roofs with built-up composition roofing. Metal siding above 10-foot high, precast concrete sill-walls provides a low maintenance enclosure for the large space required. Doors are power-operated, steel roll-up type where practical, or vertical-rising or horizontal-sliding doors, depending on the availability of door parking space and door size. Gravity roof vents are supplemented with fans where necessary to disperse heavy fume concentrations. Windows are limited to a band above the sill-wall, to minimize construction and maintenance costs, and to avoid sun dazzle and confusing shadow patterns. Gas-fired unit heaters are provided at areas usually occupied by personnel. A reinforced concrete floor slab provides support to all equipment and manufacturing operations, except a few heavy machines needing individual pile foundation.

Lighting is by high level fixtures providing a low overall intensity of illumination, with local lighting mounted where needed on columns and production equipment.

Utility distribution systems and electrical sub-stations are located overhead. Motor control centers, racks of welding machines, offices, and storage are located between the columns. Electrical system costs within buildings are included in the production equipment category.

The outfitting shops and the warehouse building are generally similar to the manufacturing buildings just described, except for their lower height and lighter construction. At the end of the outfitting shops adjacent to the assembly outfitting area, a multilevel gallery permits access to each of the deck levels inside the side assemblies and deck houses of the ship. These galleries are of varying widths to permit overhead crane service to reach each level. The outfitting shops and warehouse buildings are insulated and heated throughout, and are brightly illuminated in comparison with the steel processing and main assembly buildings.

The office and cafeteria buildings are of precast concrete floor and wall panel construction. Integrated air conditioning and lighting systems are provided for efficient working conditions in the office building for administrative and engineering functions, and for modern first aid and cafeteria space.

Materials Handling Equipment

The panel lines in the main assembly building are served by heavy industrial bridge cranes or monorail hoists over the small panel production lines, and all five flat panel production lines are wheel-type conveyors. The flat panels are pulled along the wheel conveyors by chain drives, and the total cost of these movable panel lines is $1,200,000.

Unique crane coverage is provided over the building dock and extending into the assembly building. Two nesting traveling gantries of 200-ton capacity provide a combined 400-ton capability to lift heavy bottom and bow assemblies. In addition, each gantry is provided with two independent trollies so arranged that 200-ton assemblies may easily be inverted, thereby permitting down-hand welding operations. These cranes may cost nearly $1 million each.

Industrial bridge cranes are provided in the outfitting shops and extend under the high level outfitting dock, and enable transfer of outfit to the ship through hatches by the level-luffing portal whirly crane above. A freight elevator is also provided for material movement to the high level outfitting dock, and another to the bottom of the building dock.

Conveyors are provided in the warehouse, and fork lift trucks and other mobile equipment operate in this area and throughout the yard.

The material handling cost category includes the cost of installation and appurtenances. The cost of the gantry crane tracks in the building is estimated at $140,000.

Production Machinery

The requirements for production machinery and equipment in the mechanized FDL(X) shipyard concept are estimated from the work to be accomplished at each work station on each production line. Equipment is

generally sized to handle the largest plate, shape, shaft, or assembly that may be needed on an FDL(X)-type ship. For the outfitting shop in particular, the numbers of machines needed were crudely estimated, as insufficient time was available during this study to define each operation.

The quantity and cost of machine tools is based upon conventional shipyard tooling data, modified to reflect the most modern automatic machines available. The use of tape-controlled and similar advanced machinery should permit machine time savings in the expected range of one-third to one-fifth the operating time of conventional machine tools, especially for multiple ship production. Fewer operators and less building floor space are needed, at a higher initial cost per automated machine in contrast to standard machinery.

The quantity and cost of many types of major machinery have been summarized in Appendix E, and the total cost is over $10 million. The costs shown are for the purchase cost only at factory or U.S. entry port, including freight and duty. Foundations, installation, run-in, and similar expenses have not been included in Appendix E, but are included in the total cost estimate for production machinery. The cost of small machines and equipment, and of a great variety of other miscellaneous equipment and accessories, was added to the major costs calculated at length.

The cost of electrical power and control equipment and wiring within buildings was estimated at $4.5 million. The platens for welding may cost over $1.2 million.

The European shipyards are notably well equipped with machinery, especially developed for shipbuilding. The foreign manufacturers of machinery that have provided data and prices to this report are included in Appendix F, noting the manufacturer's U.S. representative in several cases.

Design and Construction Schedule

Figure 19 shows a shipyard design and construction schedule for the one-dock yard. The basis for determining the start date is the date of production contract award. Land acquisition is assumed to have progressed to permit site development to commence four months after the start date. Additionally, all preliminary ship design and production engineering work should be complete, facility design criteria should be established prior to the start date shown, and major equipment should be ordered sufficiently in advance to be on-site when needed for installation.

A lead time of six months prior to the start of building and dock construction is estimated for the detailed construction engineering. Design proceeds concurrently with construction until the conclusion of the major design effort at the end of eighteen months. Follow-on engineering is needed to verify that equipment design is compatible with specifications and installation requirements.

Figure 19

SHIPYARD DESIGN AND CONSTRUCTION SCHEDULE

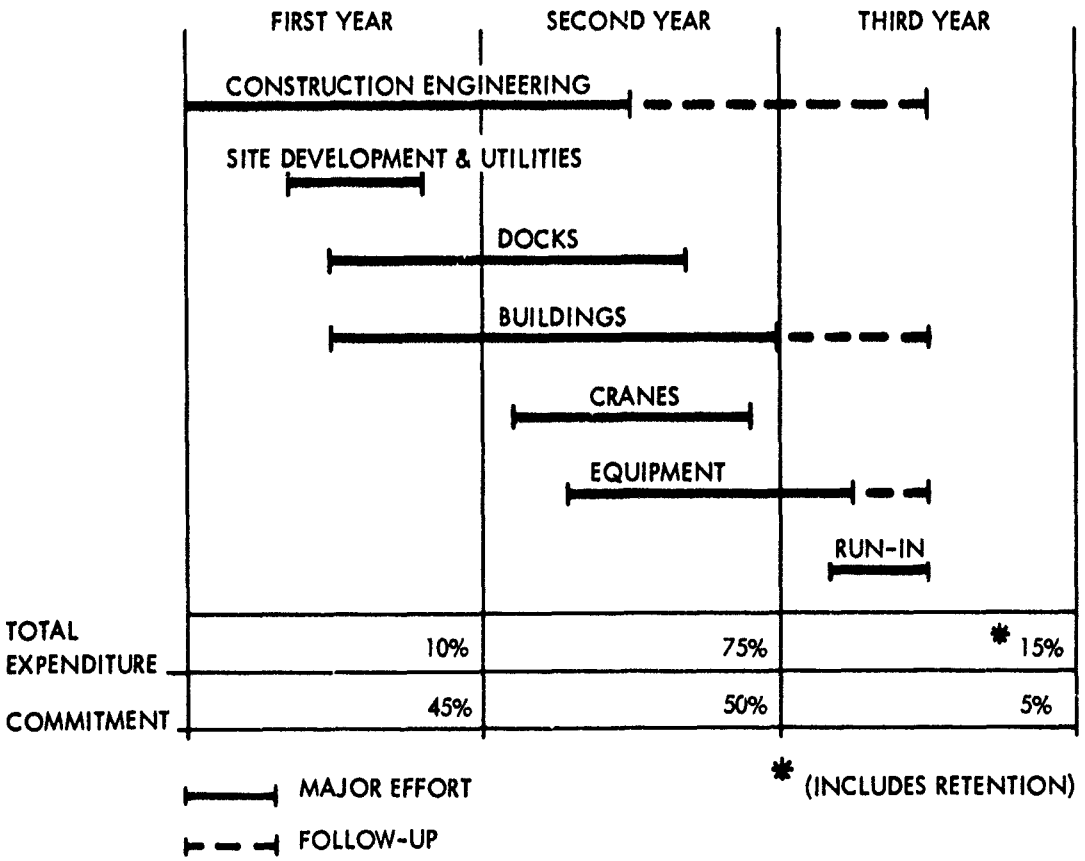

SOURCE: Bechtel Corporation

The total shipyard construction elapsed time of 30 months assumes a normal work week without overtime. The principal items on the shipyard construction critical path are building dock construction and procurement of structural steel for the main assembly building.

Expenditures and financial commitments will not be distributed evenly during the progress of the work, but will require commitment of approximately 45 percent of the total cost during the first year, although expenditure may be only 10 percent of cost. Retention of 10 percent of contract amounts until the end of the guarantee period, for assurance of satisfactory construction, increases the amount of expenditures in the last six months above that expected on a uniform basis.

Near the end of the construction period, partial occupancy of certain portions of the shipyard should be arranged to permit a smooth take-over by the operating personnel and enable ship production work and jig preparation to be started immediately after final acceptance of the yard. The steel processing area could be completed at the end of 24 months and the subassembly area, including panel lines, at the end of 26 months.

VII CONCLUSIONS

Suitability of Production Line

The principles of assembly line production are feasible for building FDL(X) ships in the conceptual, mechanized shipyard described in this study.

Production lines were developed for fabrication and preparation of shapes and plates, and for stiffened plate or panels. Flow lines and work stations were established for fabrication of steel hull assemblies and installation of their outfit. Even the erection of the assemblies was specified at certain locations in a repetitive sequence, and meets the criteria of a production line process. Further, production lines are considered to be practical for preparation of outfit, such as piping, ventilation ducts, heads, electrical cable harnesses, ventilation machinery rooms, foundations, and similar items. The shipyard mechanical and electrical equipment requirements for FDL(X) production were derived from a cursory analysis of the jobs to be done, and production equipment was then located at each station of the many production lines. The use of jigs and special tooling to expedite repetitive manufacture of similar products was specified for most production lines. The possibilities of automating many steps in the production lines are apparent, much more so than in conventional shipbuilding.

Early installation of outfit, hull engineering, and machinery in the assemblies was arranged to minimize labor and material movements and expedite ship completion.

Ship design changes to facilitate production line fabrication and assembly are desirable.

The duties of each employee could be assigned on the basis of the work station requirement, rather than on craft or union bases, and should result in a less labor-intensive plant.

The interrelationship of various steps in the production line will undoubtedly require elaborate and comprehensive production control and industrial engineering, both of which are possible with currently available techniques.

Application of the Arendal Erection Principle

The orientation of this study toward the use of the Arendal principle of erection as stated at the outset of this report does not necessarily

Preceding page blank

imply that this particular method is the most effective way to build FDL(X) ships. First of all, the Arendal yard was designed primarily for the construction of tankers and bulk cargo ships. The Arendal management states that other types of cargo ships can be produced in their yard. But for erection of the FDL(X), substantial deviation from the Arendal yard design has seemed appropriate.

The Arendal erection principle has the basic advantage that expensive covered or enclosed ship erection area is reduced to a minimum. Work in the assembly areas and in the building dock is concentrated at two indoor erection stations that can be used to full efficiency at all times. The disadvantages of the Arendal erection principle are that a complex pushing mechanism and sliding ways are necessary to extrude the ship, and that a complex system of doors is necessary to enclose the ship The total cost for these two items was estimated at over $1.1 million.

The number of building dock stations in the FDL(X) yard concept has been increased from two to five because the FDL(X) is a relatively complicated ship, and to attempt to build it in two stations would result in an unnecessarily long span of time to complete the entire ship. A very cursory analysis indicated that to build the FDL(X) ship using two stations might take 50 percent longer than with the five station building dock shown in this report. Five stations cannot be claimed as the best way to build the FDL(X) ship under the Arendal principle; more or fewer stations may be optimal, but insufficient analysis time was available to optimize the yard concept.

An appraisal of what might be termed the opposite of the Arendal principle is desirable to place the erection principle in perspective. Where the number of stations inside the building dock equals the number of sections in the ship, the entire building dock would be enclosed, and the ship would be built in place. In this case, the cost of the additional building length would be considerably higher--estimated at $2 million plus the cost of cranes--but the complex pushing mechanism and sliding ways would not be required.

The Arendal principle of both pushing the ship and covering many stations in the building dock may be the most economic way to erect ships for some number of enclosed building dock stations. Enclosing one, five, ten, or all of the sixteen sections of the building dock, may be the most economical design.

In this study the Arendal erection principle was to be applied to FDL(X) erection no matter how much the principle may be questioned. The pushing and erection system was to be utilized in the concept until conclusive evidence could be found that the Arendal principle was not appropriate for the FDL(X) ship. This conclusive evidence has not been discovered, and the Arendal erection principle may be appropriate for the FDL program.

Shipyard Flexibility for Construction of Other Ship Types

The concept of a mechanized shipyard for FDL(X) production appears to be a rather flexible yard for production of other ship types. The long main assembly aisle served by 200-ton gantry cranes is capable of lifting many types of assemblies into any one of the five work stations in the dock. The wide span permits the transverse cranes to move materials and assemblies over wide areas, both on the outfitting assembly floor and into one of the five stations in the dock. The availability of five erection stations, rather than two, provides flexibility to erect each assembly at many positions in the building dock within a limited time range. The steel processing area and building has a general design that would be efficient for many ship types. Except for the selection of the tonnage capacities and physical sizes of steel processing machinery, the capability of this building is quite general. Substantial space has been left aside for future expansion in two areas between buildings and at the sides of many buildings. Finally, the building dock dimensions are adequate for building ships up to the maximum size that can pass through the Panama Canal. A large proportion of all cargo ships anticipated for U.S. shipbuilding in the near future could be built in the conceptual shipyard. Considerable production flexibility can be obtained at little penalty to FDL costs.

In conclusion, an outline of one conceptual shipyard in which FDL ships might be produced in a new and mechanized yard in the United States has been described. The FDL(X) design is adaptable to mechanized production, and can be manufactured with advanced production line techniques to attain low shipbuilding costs in steel production. The plant shown in this report, with a capital cost of $80 million, has a capability of from 6 to nearly 12 ships a year, depending on whether a one-shift or a two-shift operation is used, and these production rates can be doubled again by duplicating most of the yard.

APPENDIXES

Preceding page blank 67

Appendix A

FDL(X) SHIP DESIGN
ASSEMBLY WEIGHT

Including Equipment installed in
Assemblies Prior to Lifting into Dock
(Short Tons)

Assembly Name	Section Numbers 1	2	3	4	5	6	7	8	9	10	11	12	13	14	15	16
Bottom	104	216	221	320	313	365	262	310	367	326	326	276	215	208	162	152
Lower side--starboard	70	76	--151--		--161--		--203--		--170--		--156--					
Lower side--port	70	76	--151--		--161--		--203--		--176--		--162--					
Fourth deck	30	32	30	38	35	39	34	37	40	40	40	40				
Second deck	30	32	30	38	35	39	34	37	40	40	40	40				
Main deck	30	32	30	38	35	39	34	37	40	40	40	40				
Upper side--starboard									--108--		--108--					
Upper side--port									--108--		--108--					
01 deck									40	40	40					
02 deck								20	72	74	74					
01, 02 deck						--98--						121				
Stack--starboard/port								20/20								
Command superstructure												10				
Motor--starboard/port						60/60										
Sixth deck						30										
Upper bow													300	294		
Deck ramps			10					10/10								

Source: Morris Guralnick Associates.

Preceding page blank

Appendix B

ASSEMBLY DATA

Section	Assembly	Sub-assembly	Location Front	Location Deck	Equipment	Make or Buy	Assembly or Fit Out	Weight (tons)	Overall Dimensions* (feet)	Remarks
10	BA		26--3/4 30--3/4	BL-6th	Piping: Diesel oil fill and transfer	M	A	326	L:40 B:104	
					Ballast flooding and drainage	M	A		H:34	Ballast piping connection to section 11
	LS			4th-MN (S)					L:40 B:17 H:43	Wing compartment assembly (S)
		LS-1		4th & 5th (S)	Exhaust vent ducts	M	A	43.0	L:40 B:17 H:22	
				4th	Canvas shop equipment	B	F			Equipment includes sewing machine and bench canvas rack grommet machine and workbench
		LS-2		3rd-2D MN (S)	Filter cleaning equipment exhaust vent ducts	B M	F A	45.0	L:40 B:17 H:21	
				3D	Gas turbine repair equipment shop	B	F			
				2D	Stateroom furniture and toilet/shower equipment	B	A			
				MN	Deck mounted furniture and toilet/shower equipment	B	A/F			
	LS			4th-MN (P)					L:40 B:17 H:43	Wing compartment assembly (P)
		LS-3		4th & 5th (P)	Exhaust vent ducts	M	A	49.0	L:40 B:17 H:22	
				4th (P)	Laundry equipment	B	F			Equipment includes: 2- 50 lb tumbler dryers, 3-50 lb washing machines, flat work ironer, sorting table, bins.

Preceding page blank

Appendix B (concluded)

Section	Assembly	Sub-assembly	Location Front	Location Deck	Equipment	Make or Buy	Assembly or Fit Out	Weight (tons)	Overall Dimensions* (feet)	Remarks
10	LS	LS-4		3rd-2D MN (P)	Exhaust vent ducts	M	A	45.0	L: 40 B: 17 H: 21	
				3D	Carpenter shop equipment	B	F			Equipment includes 20" bandsaw, 10" radial saw disc and belt sander, workbench
				2D	Stateroom furniture and toilet/shower equipment	B	F			
				MN	Deck mounted and toilet/shower equipment	B	A/F			
	4D			4th	Stanchions	M	A	40.0	L: 40 B: 70 H: 8	Vehicle cargo deck assembly
	2D			2D	Stanchions	M	A	40.0	L: 40 B: 70 H: 8	Vehicle cargo deck assembly
	MD			MN	Stanchions	M	A	40.0	L: 40 B: 70 H: 8	Vehicle cargo deck assembly
	US			01-02 (S)	Stateroom and toilet/shower equipment	B	A	57.0	L: 40 B: 17 H: 40	Wing compartment assembly (S)
	US			01-02 (P)	Stateroom and toilet/shower equipment	B	A	57.0	L: 40 B: 17 H: 40	Wing compartment assembly (P)
	01D			01	Stanchions	M	A	40.0	L: 40 B: 70 H: 8	Vehicle cargo deck assembly
	DH			02-03	Mess, lounge, scullery equipment	B	F	74.0	L: 40 B: 70 H: 8	Center section

* L = length; B = breadth; H = height.

Source: Morris Guralnick Associates.

Preceding page blank

Appendix C

FDL(X) MANUFACTURE OR PURCHASE LIST

Manufacture only those items which:

1. Form the ship's structure (including its structural subdivisions).

2. Comprise the piping and duct systems (not including the associate equipment).

Major items for manufacture are:

Manholes
Ventilation ducts
Piping (not including pumps, heat exchangers and valves)
Shell plating
Shaft fairwaters
Double plates
Skeg
Rudder
Longitudinal and transverse framing
Stanchions of nonstandard pipesize
Flanges
Decks, platforms, and flats
Deck longitudinals
Transverse deck beams
All machinery, electrical and other equipment foundations
Trunks and enclosures
Structural bulkheads
King posts and support frames
Masts

Purchase all items of equipment, outfit, furnishings, and allowance:

Machinery Equipment

Quantity	Description
2	Propulsion gas turbines
2	Propulsion generators
2	Propulsion motors
3	Propulsion excitation M-G sets
2	Propulsion shafts (rough)

Preceding page blank

Quantity	Description
2	Propellers
4	Ships' service diesel generators
1	Emergency diesel generator
1	Distilling unit
2	Auxilliary boilers
2	Helicopter and interior communications motor generators
2	Distillate fuel transfer pumps
2	Distillate fuel booster pumps
2	Distillate fuel tank stripping pumps
1	Distillate fuel transfer (emergency generator) pump
1	Lube oil transfer (gas turbine) pump
1	Lube oil transfer pump
2	Lube oil service (motor) pumps
1	JP-5 service pump
1	JP-5 transfer pump
1	JP-5 stripping pump
4	Salt water circulating pumps
1	Gasoline pump
1	Gasoline salt water compressor pump
2	Priming (for JP-5 service) pumps
4	Fire pumps
2	Portable water pumps
1	Portable water priming pumps
2	Hydraulic (gas turbine start) pumps
3	Bilge and ballast
2	Air conditioning compressors
2	Air conditioning chill water pumps
2	Sanitary flushing pumps
2	Refrigerated compressors
2	Ship's service air compressors
2	Ship's service air receivers
2	High pressure air compressors
10	High pressure air flasks
18	Dehumidification units
As required	Air conditioning recirculation fans
As required	Dehumidifying recirculation fans
As required	Ventilation fans
As required	Machinery space fans
3	Foam proportioners
2	Diesel oil filter/separator
2	Diesel oil purifier
2	Lube oil filter/separator (propulsion motor)
1	JP-5 purifier
1	JP-5 filter/separator
1	Gasoline filter/separator
2	Lube oil cooler (propulsion motor)
4	Lube oil cooler (ships' service diesel-generator)
1	Fresh water drain cooler

Electrical - E	Outfit - O	Machinery - M
Lighting fixtures	Sideport doors	Piping elbows and bends
Electrical switchboards and panels, switchgear	Monorail	Ramp winches
Rectifiers and battery charging systems	Pallet conveyors	Hatch and stern gate, hydraulic operating gear
Compass, gauges, etc.	Pallet LD/UNLD. Positioner and horizontal conveyor	Air motors
Alarms, announcing, indicator telephone systems	Overhead monorail hoists	Capstans and mooring winches
Motor control equipment	Stores and ammunition handling equipment	Anchor windlass, anchor and chain
Radar and radio equipment and waveguide	Fork lift trucks	FAS saddle winch
	Pallet transporters	Rudder stock and propeller shaft, stern tubes
	Windows and wipers	Steering gear-complete
	Landing craft dollies	Bearings
	Refrigerator doors	Exhaust silencers
	26-ft MWB and 33-ft lifeboats and davits	Plumbing fixtures
	Accommodation ladders	Valves and operating mechanisms
	Access doors, hatches, and scuttles	Purifiers, filters (piping and ventilating)
	Furniture: office, stateroom, wardroom, hotel	
	Ladders	
	Shelves and bins; ammunition stowage fittings	
	Rigging	
	Insulation	
	Deck covering	
	Dumb waiter	
	Heating and refrigeration coils	
	Shop equipment	
	Vehicle lashings and sockets	
	Convectors, unit heaters, fans	

Source: Morris Guralnick Associates.

Preceding page blank

APPENDIX D

FDLX ERECTION SCHEDULE

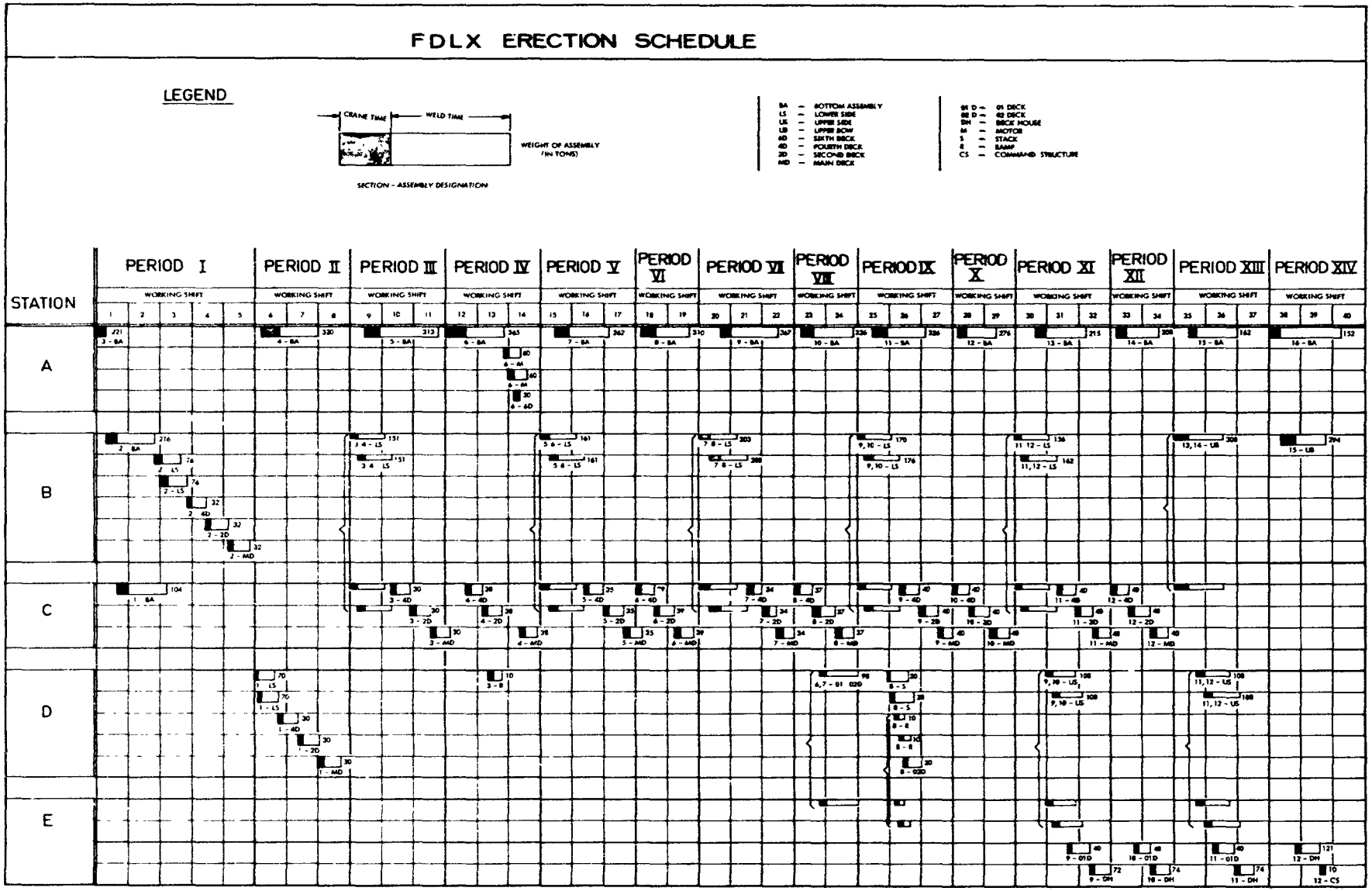

Appendix E

MAJOR SHIPYARD MACHINERY

Number	Unit	Size	Price
	Steel Processing Area		
1	Vertical plate shot blast		$ 80,000
1	Vertical plate paint primer		70,000
1	Horizontal plate roller leveler		197,000
1	Shape shot blast		80,000
1	Shape paint primer		70,000
3	Parallel plate cutting machines		135,000
3	Irregular plate cutting machines		600,000
4	Small plate strippers and tracers		108,000
1	40-ft side plate roller	1,500 ton	543,000
1	40-ft hydraulic press	1,800 ton	360,000
1	9-ft end plate roller	800 ton	89,000
2	40-ft plate press/flangers	1,000 ton	300,000
1	Plate bender/press	400 ton	50,000
1	Plate bender/roller	250 ton	83,000
1	Plate shears	40-ft x 7/8-in.	48,000
1	Plate shears	15-ft x 5/8-in.	29,000
2	Plate stamping machine	100 ton	78,000
3	Frame benders	200 ton largest	200,000
2	Beam splitting burners	Large	52,000
2	Edge planes		98,000
4	Plate notchers	Largest	93,000
1	Frame bending furnace		27,000
2	Girder welding machines		230,000
	Total		$3,620,000
	Panel Production Lines and Main Assembly Building		
36*	Automatic single fillet welding machines		$ 223,000
123*	Automatic double fillet welding machines		1,440,000
87*	Automatic butt fillet welding machines		575,000
16*	Automatic vertical slag welding machines		262,000
--	X-Ray equipment shop		320,000
	Total		$2,820,000

Preceding page blank

Number	Unit	Size	Price
	Transportation Equipment		
4	Straddle carriers	30 ton	$ 42,000
8	Straddle carriers	15 ton	120,000
42	Fork lift trucks	51-ton largest	235,000
20	Flat bed semi-trailers	25 in.	250,000
1	Flat bed semi-trailers	250 in.	47,000
5	Tractors		50,000
	Total		$ 724,000
	Pipe Shop		
1	Pipe bender	12-in. max.	$ 88,000
1	Pipe bender	10-in. max.	55,000
2*	Pipe benders	8-in. max.	76,000
2*	Pipe benders	4-in. max.	22,000
7*	Pipe benders	2-in. max.	49,000
12	Induction heaters		120,000
2	Milling machines	Large and small	31,000
	Total		$ 441,000
	Machine Shop		
5	Drill presses	6-ft. x 17-in. largest	$ 48,000
2	Threading machines	3-in. largest	44,000
5*	Power saws/shears		81,000
3*	Grinders, external cylindrical	16-in. x 144-in. largest	105,000
3*	Grinders, miscellaneous	Vertical rotating 36-in. largest	111,000
3	Presses	500-ton largest	200,000
3	Drilling machines, radial	10-ft. largest	140,000
3	Gear hobbing machines	36-in. x 15-in largest	86,000
4	Engine lathes	48-in. x 48-in largest	350,000
2	Turret lathes	3-1/2-in. largest	102,000
4	Milling machines, vertical and horizontal		285,000
3	Planers and shapers		93,000
3	Boring mills, vertical and horizontal		555,000
	Total		$2,200,000

Number	Unit	Size	Price
	Miscellaneous		
4	Sheet metal-press brakes, rollers, and shears		$ 60,000
20	Electrical automatic cable reels		100,000
	Total		$ 160,000

* Includes units located elsewhere.

Source: Stanford Research Institute.

Appendix F

MACHINERY MANUFACTURERS
THEIR U.S. REPRESENTATIVE, AND THEIR PRODUCTS

Manufacturer	Product	U.S. Representative
Ingenjörsfirma HEBE AB Storgatan 19, Örebro, Sweden	Rollers Conveyors	
Kjellberg-Eberle, GmbH Hanoverland Strasse 197-205, Frankfort am Main, Germany	Plate cutters	Linde Co. 270 Park Avenue New York 17, New York
ESAB Frankfort am Main Germany	Profile cutters Welders	National Cylinder Gas Co. 840 N. Michigan Chicago, Illinois
GAG Grandveg 56-58 2 Lokstedt Hamburg, Germany	Optical markers	Ampower Corp. 50 Broad Street New York, New York
Gesellschaft Anzeichen Geräte MBH Hamburg 54 Lokstedt, Germany	Optical markets Plate cutters	
Hugh Smith and Co. (Possil) Ltd., Glasgow N. 2, Scotland	Plate & frame benders Shears Planners Rollers Presses	Strachan-Mackoe Corp. 70 Hudson Hoboken, New Jersey
Wagner A/G, Dortmund Germany	Rollers Shears	Girard Associates P.O. Box 415 Chambersburg, Pa.
Maschinenfabrik Froriep, Rheydt Rhineland, Germany	Rollers Benders	Cosa Corp. 405 Lexington Avenue New York, New York
Wilhelmsburger Maschinenfabrik, Hinrichs & Sohn Geesthacht Bei Hamburg, Germany	Rollers	

Preceding page blank

Manufacturer	Product	U.S. Representative
Ursviken Mekanisha Verstads A/B, Ursviken Skellefteå, Sweden	Presses Shears	
Herkules-Werk GmbH Wetzlar, Germany	Frame benders	Bohn Engineering and Machinery Co. 1485 Bayshore Highway San Francisco, California Upton, Bradeen and James 18067 Wyoming Avenue Detroit 21, Michigan
Bronx Engineering Stourport, England	Presses	
A. B. Hagglund and Söner Box 5164 Gothenburg, Sweden	Welders	
Pullmax (Kaiser Pullmax AB) Vasagatan 20 Vasterås, Sweden	Profile welders Plate production line	Kaiser Steel International Division Oakland, California
Eckold 3424 St. Andreasberg- Spe[illegible]luttertal Oberharz, Germany	Metal formers	Bohn Engineering and Machinery Co. 1483 Bayshore Highway San Francisco, California
Pines Co. Aurora, Illinois	Pipe benders	
Krupp-Ardelt GmbH, 2940 Wilhemshaven Germany	Cranes	Carl G. Brimmekamp & Co. 582 Market Street San Francisco, California
Kampnagle A/G Jarre Strasse 26 Hamburg 39, Germany	Cranes	
Weinmann A/C 6775 Königsbofen, Baden, Germany	Heavy lift trailers	Walter Schimpf Kolb[illegible]rmoorer Strasse 32 Bad [illegible]bling, Germany