AD-751 649

SHOCK LOADS ON PIPING SYSTEMS

Dennis Harold Peters

Naval Postgraduate School
Monterey, California

September 1972

DISTRIBUTED BY:

NTIS

National Technical Information Service
U. S. DEPARTMENT OF COMMERCE
5285 Port Royal Road, Springfield Va. 22151

AD751649

NAVAL POSTGRADUATE SCHOOL
Monterey, California

DDC
RECEIVED
NOV 29 1972
B

THESIS

SHOCK LOADS ON PIPING SYSTEMS

by

Dennis Harold Peters

Thesis Advisor: R.E. Newton

September 1972

Reproduced by
NATIONAL TECHNICAL
INFORMATION SERVICE

Approved for public release; distribution unlimited.

Security Classification

DOCUMENT CONTROL DATA - R & D

(Security classification of title, body of abstract and indexing annotation must be entered when the overall report is classified)

1. ORIGINATING ACTIVITY (Corporate author) Naval Postgraduate School Monterey, California 93940	2a. REPORT SECURITY CLASSIFICATION Unclassified 2b. GROUP

3. REPORT TITLE

Shock Loads on Piping Systems

4. DESCRIPTIVE NOTES (Type of report and inclusive dates)

Master's Thesis; September 1972

5. AUTHOR(S) (First name, middle initial, last name)

Dennis Harold Peters

6. REPORT DATE September 1972	7a. TOTAL NO. OF PAGES 87	7b. NO. OF REFS 15
8a. CONTRACT OR GRANT NO b. PROJECT NO c. d.	9a. ORIGINATOR'S REPORT NUMBER(S) 9b. OTHER REPORT NO(S) (Any other numbers that may be assigned this report)	

10. DISTRIBUTION STATEMENT

Approved for public release; distribution unlimited.

11. SUPPLEMENTARY NOTES	12. SPONSORING MILITARY ACTIVITY Naval Postgraduate School Monterey, California 93940

13. ABSTRACT

This thesis describes the development of a Fortran IV computer program for finding shock-induced stresses in a three-dimensional piping system. Discretized equations of motion are formed by the finite element method. Input motions are support translations specified by response shock spectra. Maximum responses in individual modes and resulting octahedral shearing stresses at selected points are found for shock motions in three orthogonal directions. Extreme stresses, based on the square root of the sum of the squares of the modal stresses, are estimated for each input direction. An example problem is analyzed to demonstrate the use of the program.

DD FORM 1 NOV 65 1473 (PAGE 1)

S/N 0101-807-6811

Security Classification

A-31408

Security Classification

14 KEY WORDS	LINK A ROLE	LINK A WT	LINK B ROLE	LINK B WT	LINK C ROLE	LINK C WT
Modal Analysis						
Finite Element						
Shock Analysis						
Piping Stresses						

DD FORM 1 NOV 63 1473 (BACK)

S/N 0101-807-6821

Security Classification

A-31409

Shock Loads on Piping Systems

by

Dennis Harold Peters
Lieutenant, United States Navy
B.A.E., University of Minnesota, 1965

Submitted in partial fulfillment of the
requirements for the degree of

MASTER OF SCIENCE IN MECHANICAL ENGINEERING

from the

NAVAL POSTGRADUATE SCHOOL
September 1972

Author _____

Approved by: _____ Thesis Advisor

_____
Chairman, Department of Mechanical Engineering

_____
Academic Dean

ABSTRACT

This thesis describes the development of a Fortran IV computer program for finding shock-induced stresses in a three-dimensional piping system. Discretized equations of motion are formed by the finite element method. Input motions are support translations specified by response shock spectra. Maximum responses in individual modes and resulting octahedral shearing stresses at selected points are found for shock motions in three orthogonal directions. Extreme stresses, based on the square root of the sum of the squares of the modal stresses, are estimated for each input direction. An example problem is analyzed to demonstrate the use of the program.

TABLE OF CONTENTS

I. INTRODUCTION ---------- 11

II. THEORY ---------- 14

A. MODEL LIMITATIONS ---------- 14

B. FINITE ELEMENT ---------- 15

1. Element Displacement Vector ---------- 15

2. Element Stiffness and Mass Matrices ----- 16

C. ASSEMBLED EQUATIONS OF MOTION ---------- 18

D. MODAL ANALYSIS ---------- 19

E. GENERALIZED FORCES AND STRESSES ---------- 20

III. PROGRAM DEVELOPMENT ---------- 23

A. SYSTEM DESCRIPTION ---------- 23

B. STIFFNESS AND INERTIA MATRIX FORMULATION ---- 24

C. FREE VIBRATION MODE SHAPES AND FREQUENCIES -- 24

D. MODAL RESPONSE ---------- 25

E. STRESSES ---------- 26

F. PROGRAM OUTPUT ---------- 29

IV. PROGRAM TESTING ---------- 30

A. TEST PROBLEM 1 ---------- 30

B. TEST PROBLEM 2 ---------- 31

C. TEST PROBLEM 3 ---------- 32

V. EXAMPLE PROBLEM ---------- 34

A. PIPING SYSTEM ---------- 34

B. DATA INPUT AND OUTPUT ---------- 34

VI. DISCUSSION ---------- 40

A. CONFIGURATION LIMITATIONS ---------- 40

B. SIZE LIMITATIONS ---------- 40

VII. CONCLUSIONS ---------- 42

VIII. APPENDICES ---------- 43

A. ELEMENT STIFFNESS AND INERTIA MATRICES ----- 43

B. VELOCITY SHOCK SPECTRA AND MODAL RESPONSE -- 45

C. MODE SHAPES AND FREQUENCIES OF EXAMPLE PROBLEM ---------- 49

D. CALCULATION OF SPECIFIC WEIGHT AND RADIUS OF GYRATION ---------- 51

E. PROGRAM ---------- 52

LIST OF REFERENCES ---------- 83

INITIAL DISTRIBUTION LIST ---------- 85

FORM DD 1473 ---------- 86

LIST OF TABLES

I. Comparison of first three bending frequencies of Test Piping System 2 with the exact results --- 32

II. Data input, example problem ---------- 36

III. Mode velocities, example problem ---------- 37

IV. Mode participation factors, example problem ------- 38

V. Octahedral shearing stresses, example problem ----- 39

VI. Element stiffness matrix ---------- 43

VII. Element inertia matrix ---------- 44

VIII. Eigenvalues and eigenvectors, example problem ----- 50

LIST OF FIGURES

1. Element generalized displacements ---------- 15
2. Element generalized forces ---------- 21
3. Stress location points ---------- 27
4. Positive stress convention ---------- 28
5. Test Piping System 1 ---------- 30
6. Test Piping System 2 ---------- 31
7. Test Piping System 3 ---------- 33
8. Example piping system ---------- 35
9. Beam element coordinates ---------- 46

LIST OF SYMBOLS

A single underline on a capital letter denotes a rectangular matrix, and a single underline on a lower case letter denotes a column vector. Superior dots denote time derivatives. The symbols used in the computer program are described in Appendix E.

A	Element cross-sectional area
b_r	Mode participation factor, mode r
C	A constant
D	Pipe outside diameter
E	Young's modulus
$\underline{f}^e$	Element generalized force vector
f_i	Components of the generalized force vector
G	Shear modulus
I	Second moment of the pipe cross-sectional area about a diameter
$\underline{I}$	Identity matrix
J	Mass moment of inertia per unit length about pipe axis
$\underline{K}$	Assembled stiffness matrix
$\underline{K}^e$	Element stiffness matrix
ℓ	Length of an element
$\underline{M}$	Assembled inertia matrix
$\underline{M}^e$	Element inertia matrix
$\underline{M}^e_{B12}$	Element inertia submatrix, bending 1-2 plane
$\underline{M}^e_{B13}$	Element inertia submatrix, bending 1-3 plane
$\underline{M}^e_L$	Element inertia submatrix, longitudinal motion

$\underline{M}_T^e$	Element inertia submatrix, torsional motion
m_r	Modal mass, mode r
m_L	Mass of the lagging per unit length
m_P	Mass of the pipe per unit length
$\underline{N}$	Row vector of shape functions
$\underline{p}$	Vector of principal coordinates
p_r	Principal coordinate, mode r
Q	Moment of pipe cross-sectional area lying on one side of neutral axis
$\underline{q}$	Displacement vector
r	Radius of gyration
s	Base displacement
T^e	Kinetic energy of an element
t	Pipe wall thickness
$\underline{u}$	Vector of absolute displacements corresponding to unit base displacement
u_i	Components of displacement vector
$\underline{V}$	Modal matrix
$\tilde{V}_r$	Spectrum velocity, mode r
$\underline{v}_r$	Eigenvector, mode r
W_L	Weight of lagging per unit length
W_P	Weight of pipe per unit length
$\underline{w}$	Absolute displacement vector
z	One degree-of-freedom system coordinate
γ_m	Modified specific weight
ξ	Dimensionless length coordinate
ρ	Density
σ	Modal stress
τ	Shearing stress

τ_{oct}	Octahedral shearing stress
$\underline{\Omega}^2$	Spectral (diagonal) matrix
ω	Natural circular frequency, one degree-of-freedom system
ω_r	Circular frequency of mode r

Superscripts

T	Transpose of matrix
(r)	Mode designator for eigenvectors (r=1,2,...,n)

ACKNOWLEDGEMENTS

I wish to express my sincere appreciation to my advisor, Professor Robert E. Newton, for his invaluable assistance and constructive supervision in the preparation of this thesis, and to Professor Gilles Cantin for his assistance in the computer work.

I would also like to express my thanks to the staff of the W.R. Church Computer Center, Naval Postgraduate School.

I. INTRODUCTION

With the greater demand for electrical power, and the diminishing fossil fuel supply, there has been an increase in the construction and use of nuclear power generating plants. Correspondingly, there has been greater concern for the safety of the power plant during an earthquake.

Also, the reduction in the size of the Navy has led to an increased emphasis on the integrity of the internal systems of a naval vessel under shock loads. Thus, there has been a growing engineering interest in finding a rapid and accurate method of analysis to determine the shock-induced stresses in a complex continuous piping system. This thesis describes and presents a computer program, written in Fortran IV computer language, to find the stresses in a piping system responding to shock.

Complex piping systems can be analyzed by using discretized models. In using the discretization technique, the continuous piping system is modeled by finite size elements connected at nodes. After the system has been subdivided, the elastic and inertial matrices of each element can be found and assembled to form the elastic and inertial matrices of the system [1,2].

A considerable volume of material is available to assist in analyzing structures and systems responding to earthquakes [3,4,5]. Two of the techniques used in earthquake response analysis are modal analysis with a

discretized model and transfer functions [4,5]. The shock input for earthquakes can be specified by using time history [3], or shock spectrum [4,5].

The Navy uses a technique called the Dynamic Design-Analysis Method (DDAM) to determine the shock response of shipboard equipment and systems [6]. The DDAM is a modal analysis technique using shock spectra to specify the shock inputs.

The shock spectrum presents, as a function of the system natural frequency, the maximum response of a one degree-of-freedom system responding to a shock motion. The shock spectrum is generally presented in terms of response velocity or acceleration.

Several graduates of the Naval Postgraduate School have written theses on determining natural frequencies and mode shapes for piping systems. Fink [7] developed a program to analyze planar piping systems, including out-of-plane bending, using transfer matrices. Baird [8] presented the necessary theory to expand Fink's work to a three-dimensional piping system. Rudolf [9] developed a program that determines the frequencies of a general three-dimensional piping system. Because the transfer matrix does not yield a discretized model of the structure, there is no ready means for using the frequency and mode shape data to find shock-induced modal responses. On the other hand, the finite element technique provides a consistent discretized model

which may be used for finding frequencies, mode shapes, modal responses to shock inputs, and resulting stresses. For this reason the finite element method was chosen for this thesis.

Shock spectra and mode participation factors are used to determine the modal responses. At selected points the modal octahedral shearing stresses are combined by scalar addition of the distortion energy to estimate extreme stresses.

II. THEORY

Material and structural linearity and material local homogeneity and isotropy are assumed in developing the mathematical model.

A. MODEL LIMITATIONS

There are few inherent restrictions on the capabilities of the finite element method to model complex details of piping configurations. Considerations of the quantity of input and output data, program length, core storage capacity, computing time, and cost do impose practical limitations. The limited time available in developing this thesis has necessitated the following restrictions on the model used here.

The system consists of straight lengths of constant-section pipe (elements). Each element centerline is parallel to one of the three mutually orthogonal global reference axes, and 90° bends are replaced by fictitious extensions of the tangent sections to the intersection point of the centerlines. Effects of added mass contributed by external lagging are represented, but no provision is made for added mass due to valves or fittings. Pipe hangers furnishing uniaxial restraint in a global direction may also be represented. Bending action is described by the Euler-Bernoulli beam theory, neglecting shear deformation

and rotatory inertia. All ends of the configuration are treated as fixed. The shock input motion is a translation of the base[1] along a global axis.

B. FINITE ELEMENT METHOD

Once the system has been subdivided into elements, the elastic and inertial characteristics are determined. The element stiffness matrix can be determined by many different techniques, whereas the inertial matrix is generally determined by using shape functions and integrating along the length, [1,2].

1. The Element Displacement Vector

Consider an element with displacement components at the nodes (ends) as shown in Fig. 1.

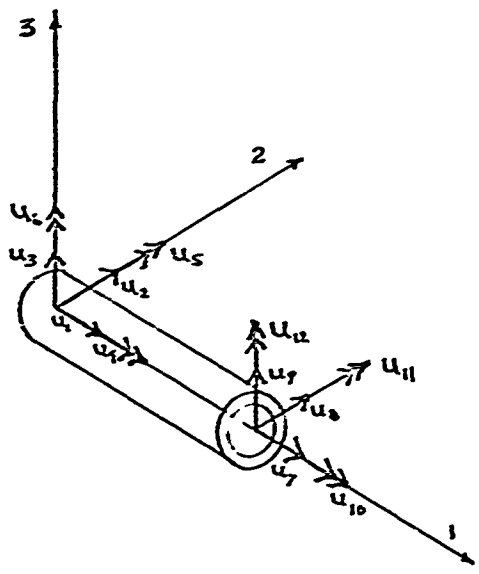

FIG. 1

ELEMENT GENERALIZED DISPLACEMENTS

[1]The clamped ends of the configuration are treated as joined to a rigid base.

Here, the double arrowhead vectors are positive rotations in accordance with the right-hand rule. The displacement vector is

$$\underline{q} = [u_1 \; u_2 \; \cdots \; u_{12}]^T$$

From Fig. 1, components u_1 and u_7 are longitudinal displacements, components u_2, u_3, u_5, u_6, u_8, u_9, u_{11} and u_{12} are bending displacements and rotations in the 1-2 and 2-3 planes, and components u_4 and u_{10} are twisting rotations.

2. Element Stiffness and Inertial Matrices

Przemieniecki [2] forms the element stiffness matrix by solving the differential equations of the element displacements. Appendix A reproduces the element stiffness matrix with Przemieniecki's transverse shear deflection factor (ϕ) set equal to zero.

To determine the element inertia matrix, an expression for the element kinetic energy T^e is formed, rotatory inertia due to bending being neglected.

$$T^e = \frac{1}{2} C \ell \int_0^1 \dot{\underline{q}}^T \underline{N}^T \underline{N} \, \dot{\underline{q}} \, d\xi = \frac{1}{2} \dot{\underline{q}}^T \underline{M}^e \, \dot{\underline{q}}$$

where ℓ is the element length, C is a constant, $\underline{M}^e$ is the element inertia matrix, $\underline{N}$ is the shape function row vector, and ξ is a dimensionless length coordinate.

Therefore

$$\underline{M}^e = C\ell \int_0^1 \underline{N}^T \underline{N}\, d\xi \qquad (1)$$

Since the local element axes coincide with the cross section principal axes, the inertia matrix may be determined from 2x2 and 4x4 element sub-matrices. Consider the following motions of the element:

a) longitudinal:

$$\underline{q}_L = [u_1\ u_7]^T, \quad N_1 = 1 - \xi, \quad N_7 = \xi$$

and $C = \rho A$ where A is the cross-sectional area of the element and ρ is the density. From Eq. 1

$$\underline{M}_L^e = \frac{\rho A \ell}{6} \begin{bmatrix} 2 & 1 \\ 1 & 2 \end{bmatrix} \qquad (1a)$$

b) twist:

$$\underline{q}_T = [u_4\ u_{10}]^T, \quad N_4 = (1 - \xi)\ell, \quad N_{10} = \xi\ell$$

and $C = J$ where J is the mass moment of inertia per unit length about the pipe axis. From Eq. 1

$$\underline{M}_T^e = \frac{J\ell}{6} \begin{bmatrix} 2 & 1 \\ 1 & 2 \end{bmatrix} \qquad (1b)$$

c) bending in the 1-2 plane:

$$\underline{q}_{B12} = [u_2\ u_6\ u_8\ u_{12}]^T, \quad N_2 = 1-3\xi^2+2\xi^3,$$

$$N_6 = \ell(\xi-2\xi^2+\xi^3), \quad N_8 = 3\xi^2-2\xi^3, \quad N_{12} = \ell(-\xi^2+\xi^3),$$

and $C = \rho A$. From Eq. 1

$$\underline{M}^e_{B12} = \frac{\rho A \ell}{420} \begin{bmatrix} 156 & 22\ell & 54 & -13\ell \\ 22\ell & 4\ell^2 & 13\ell & -3\ell^2 \\ 54 & 13\ell & 156 & -22\ell \\ -13\ell & -3\ell^2 & -22\ell & 4\ell^2 \end{bmatrix} \tag{1c}$$

Bending in plane 1-3 results in the same numerical coefficients as $\underline{M}^e_{B12}$. Because the positive senses for the rotation angles are reversed, rows 2 and 4 and columns 2 and 4 are multiplied by minus one. These submatrices are assembled to form the element inertia matrix. This matrix is displayed in Appendix A.

C. ASSEMBLED EQUATIONS OF MOTION

The governing equations of motion, in matrix notation, for undamped free vibration [2] with a fixed base are

$$\underline{M}\,\ddot{\underline{q}} + \underline{K}\,\underline{q} = 0 \tag{2}$$

where $\underline{q}$ is the assembled displacement vector and $\underline{M}$ and $\underline{K}$ are the assembled inertial and stiffness matrices. $\underline{M}$ and $\underline{K}$ are referred to a global coordinate system and $\underline{M}^e$ and $\underline{K}^e$ are referred to local coordinates. The assembly process consists of realigning the local system to the global system and building the $\underline{M}$ and $\underline{K}$ matrices. Reference [2] gives sample assembly techniques.

D. MODAL ANALYSIS

Modal analysis is the process of finding the response motion of a many degree-of-freedom system by superposition of the response motions in the principal (or natural) modes. This technique is advantageous because the motions in the principal modes are independent of one another (uncoupled). To use the method, it is first necessary to find the natural frequencies and mode shapes for the free motions governed by Eq. 2, i.e., to solve the eigenvalue problem $\underline{K}\ \underline{v} = \omega^2\ \underline{M}\ \underline{v}$.

Finding eigenvalues (ω^2) and eigenvectors ($\underline{v}$) is a standard problem of numerical analysis. The first step is a transformation to a single-matrix problem. Details of the transformation used here, which requires a Cholesky decomposition of the inertia matrix, are given on p. 389 of reference [1]. Following this, Jacobi rotations [15] are used to find the spectral and modal matrices ($\underline{\Omega}^2$ and $\underline{V}$). The modal matrix is normalized with respect to the inertia matrix, i.e., $\underline{V}^T\ \underline{M}\ \underline{V} = \underline{I}$, where $\underline{I}$ is the nth order identity matrix.

The shock analysis is based on using velocity shock spectra to characterize the input motion and mode participation factors to determine the responses. Although both shock spectra and mode participation factors have been extensively used in earlier studies [6], the finite element

discretization necessitates a new development of working formulas. Details of this development are given in Appendix B.

Each shock input motion consists of base translation parallel to a global axis. It is shown in Appendix B that the mode participation factor b_r for mode r is

$$b_r = \underline{v}^{(r)^T} \underline{M}\, \underline{u} \tag{B.5}$$

where $\underline{v}^{(r)}$ is the modal eigenvector and $\underline{u}$ is the vector of absolute displacements corresponding to unit base displacement. The maximum relative displacements due to mode r response are

$$\underline{q}_{max} = \underline{v}^{(r)}\, b_r\, \tilde{V}_r/\omega_r \tag{B.6a}$$

where ω_r is the modal circular frequency and $\tilde{V}_r$ is the spectrum velocity at that frequency.

Since responses to shock inputs in each of the three global directions are separately determined, the vector $\underline{u}$ and the mode participation factors b_r must be evaluated separately for each direction. The modal masses m_r (see Appendix B) are likewise different for each input direction.

E. GENERALIZED FORCES AND STRESSES

The subvector $\underline{q}^e$ of element peak modal displacements may be found from the system vector, taking into account the

orientation of the local reference axes. From this the element generalized force vector $\underline{f}^e$ is determined. This force vector consists of the elastic and inertial contributions for each element.

$$\underline{f}^e = (\underline{K}^e - \omega_r^2 \, \underline{M}^e) \, \underline{q}^e \tag{3}$$

Fig. 2 shows the positive directions for the components of the generalized force vector.

$$\underline{f}^e = [f_1 \; f_2 \; \cdots \; f_{12}]^T$$

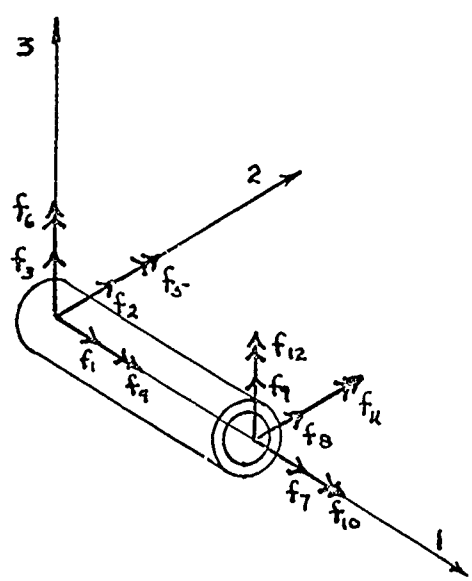

FIG. 2

ELEMENT GENERALIZED FORCES

The stresses at the nodal points of the element can be determined from the generalized forces by standard methods of solid mechanics [10].

III. PROGRAM DEVELOPMENT

The computer program was written in Fortran IV computer language using double-precision arithmetic on an IBM 360/67 digital computer. It consists of a main calling program and seven subroutines. The main program calls the subroutines, where the actual calculations occur, in the necessary order. Information is passed between the main program and the subroutines by the use of a common storage core. Appendix E contains the program listing.

A. SYSTEM DESCRIPTION

After the piping system has been modeled and subdivided, subroutine INPUT is used to read the data input of the geometry and material properties of the system. The geometry of the piping system model is determined by the global coordinates of the nodes of the model. The global system is a right-handed orthogonal coordinate system. Each pipe segment must be parallel to a global axis, but there are no restrictions on the placement of the origin of the global system. The parameters from the subdivision of the system are read. For each node the global coordinates and boundary conditions are read. If the node is fixed, the stiffness and inertial matrix components due to the node displacements are not assembled into the system matrices.

The numbering of nodes and elements is arbitrary. There are two nodes per element and six degrees of freedom per node. For each element, the node numbers and pipe group are read. A pipe group includes all elements that have the same Young's modulus, Poisson's ratio, specific weight, radius of gyration, and cross-sectional dimensions. Appendix D shows the method used to calculate the effect of lagging on the specific weight and the radius of gyration.

B. STIFFNESS AND INERTIAL MATRIX FORMULATION

Subroutine FØRM generates the element stiffness and inertia matrices as shown in Appendix A. Rotatory inertia and shear deformation due to bending are neglected. The orientation of the element is determined with respect to the global coordinate system and the correspondence between local and global degrees of freedom is established. After determining the correspondence between the local and global degrees of freedom, the element stiffness and inertia matrices are assembled to form the system stiffness and inertia matrices. If pipe hangers are present, the corresponding (uniaxial) hanger stiffnesses are added to the appropriate diagonal elements of the system stiffness matrix.

C. FREE VIBRATION MODE SHAPES AND FREQUENCIES

Subroutine CHØMØD uses Cholesky decomposition of the system inertia matrix and coordinate transformation to form

a single symmetric matrix for which eigenvalues and eigenvectors are found. Subroutine JACRØT is a modification of a program originally coded by Professor G. Cantin. It uses the Jacobi variable threshold method to find eigenvalues and eigenvectors of a real symmetric matrix. The modal matrix, when transformed back to system coordinates, is normalized with respect to the system inertia matrix.

Since the system matrices increase in size with finer subdivisions or more complex systems, an economizing technique, to reduce the number of degrees of freedom in the eigenvalue problem, was investigated during the program development. The component mode synthesis method as used by Benfield and Hruda [11] was studied. It was established that the constrained component branch technique [11], with interface loading, with no mode suppression gave results identical with those obtained by the direct method described above when applied to planar vibration of a clamped-clamped beam represented by six elements. Despite the success of this trial, it was concluded that the added program complexity accompanying the use of component mode synthesis would offset the potential economies. Another standard economizer technique [14] was considered, but ultimately rejected for the same reason.

D. MODAL RESPONSE

The number of modes to be used in the stress analysis and the specification of the shock spectrum are input data

for subroutine SPCYRM. There are three choices available to select the number of modes to be used: a designated upper frequency limit, an upper limit which is a multiple of the fundamental frequency, and an option for any method the user desires. Three choices are also available for specifying the shock spectrum: a spectrum defined by straight-line segments; a constant velocity, then constant acceleration shock spectrum; and an option for any method the user desires. The shock input is restricted to a translation of the base along a global axis and is specified by one shock spectrum and three scaling factors for the three input directions. Subroutine MODE modifies the spectrum velocity for modal mass, if desired. There are three choices available: no correction, log of the modal weight correction, and an option for any method the user desires. This subroutine also calculates the mode participation factors.

E. STRESSES

Subroutine STRESS calculates stresses at the nodes of the elements. The element peak displacements are determined and realigned from global degrees of freedom back to the local element degrees of freedom. The element generalized force vector is then calculated. Consider the action of the generalized force vector on the element shown in Fig. 3.

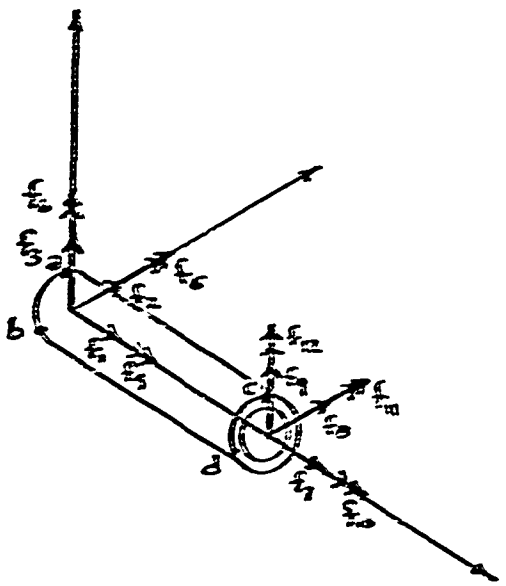

FIG. 3

STRESS LOCATION POINTS

At locations a,b,c, and d, the stress vector acting on the cross-section may be resolved into normal and shearing stresses. Fig. 4 shows the positive sign convention used for the normal and shearing stresses.

The normal stress σ and the shearing stress τ at each point shown in Fig. 3 are given by:

1. at location a)

$$\sigma = -f_1/A - f_5\ D/2I$$

$$\tau = -f_4\ D/4I + f_2\ Q/2It$$

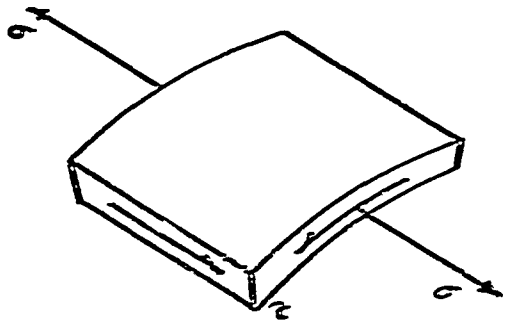

FIG. 4

POSITIVE STRESS CONVENTION

where I is the second moment of cross-sectional area about a diameter, D is the outside diameter, Q is the first moment, about a diameter, of the portion of the cross-sectional area lying on one side of the diameter, and t is the pipe wall thickness.

2. at location c)

$$\sigma = f_7/A + f_{11}\, D/2I$$

$$\tau = f_{10}\, D/4I - f_8\, Q/2It$$

3. at location b)

$$\sigma = - f_1/A - f_6\, D/2I$$

$$\tau = - f_4\, D/4I + f_3\, Q/2It$$

4. at location d)

$$\sigma = - f_7/A - f_{12}\, D/2I$$

$$\tau = f_{10}\, D/4I - f_9\, Q/2It$$

These normal and shearing stresses are then used to find the octahedral shearing stresses [12], which are given by

$$\tau_{oct} = 1/3\ (2\sigma^2 + 6\tau^2)^{\frac{1}{2}} \qquad (4)$$

For each element the above calculations are performed for each mode. At each of the four points, the shearing stresses for the individual modes are then combined by determining the square root of the sum of their squares. This process is accomplished for each input direction. This is done for each element in turn, starting with the first.

F. PROGRAM OUTPUT

All input information is echo-checked. The square of the mode frequency and the mode shape are printed for each mode. The spectrum velocities and mode participation factors are also printed. The octahedral shearing stresses at points a, b, c, and d (Fig. 3) of each element are printed for the three shock input directions.

IV. PROGRAM TESTING

In order to explore the capabilities of the program and verify its integrity, a number of plane test configurations were studied. These are described in the following sections.

A. TEST PROBLEM 1

The configuration shown in Fig. 5 has three identical uniform runs of equal length between the central junction and the clamped edges.

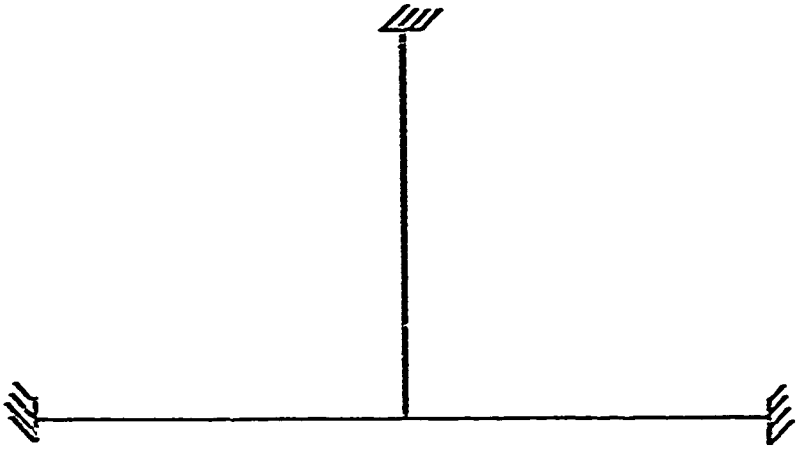

FIG. 5
TEST PIPING SYSTEM 1

The mode shapes and frequencies for in-plane vibration of this system were studied extensively with a developmental program. The present program gave identical results for the

in-plane modes. The out-of-plane modes exhibited the required symmetric or anti-symmetric form.

Additional program tests on this configuration involved different element numbering and node numbering and six different orientations of the global axes relative to the structure. Mode shapes and frequencies were unaffected by these changes.

B. TEST PROBLEM 2

This system, shown in Fig. 6, consisted of a straight uniform pipe clamped at the ends and represented by four elements.

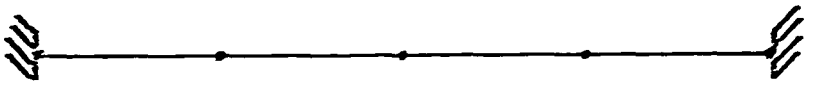

FIG. 6

TEST PIPING SYSTEM 2

The frequencies found for the lower modes showed good agreement with exact results. Table I shows the comparison of the first three bending frequencies of the finite element solution with exact results [13]. All the eigenvectors showed the required symmetric or anti-symmetric form. Bending modes occurred in pairs having equal eigenvalues and with the corresponding eigenvectors representing deflections in orthogonal planes.

Stresses found for this system were studied in detail. At each node, the stresses are calculated at two points of the cross-section. Except at the clamped ends, there are two adjacent elements sharing each node, so that stresses at these sections are calculated twice. Complete agreement was found between these two sets of stress evaluations. Also, identical stresses resulted from shocks in the two directions perpendicular to the length.

TABLE I

COMPARISON OF FIRST THREE BENDING FREQUENCIES OF TEST PIPING SYSTEM 2 WITH EXACT RESULTS

Mode	Exact (Hz)	Finite Element (Hz)	Percent Difference
1	422.32	422.65	0.08
2	1164.15	1174.26	0.9
3	2282.20	2329.64	2.1

C. TEST PROBLEM 3

The equal-legged configuration of Fig. 7 consists of uniform pipe throughout. Mode shapes of this system again showed the required symmetric or anti-symmetric form. Likewise, the shock-induced stresses exhibited the expected symmetry properties.

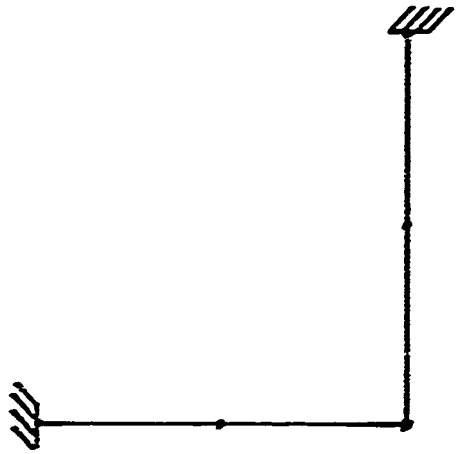

FIG. 7

TEST PIPING SYSTEM 3

V. EXAMPLE PROBLEM

A. PIPING SYSTEM

The example system analyzed is a model of the main steam piping system on a modern naval vessel. The main steam piping from the boiler to the rigid cross-connect anchor assembly is modeled. The ends of the piping system are clamped, and there are two hangers. The system is three-dimensional with no branches. The pipe properties are:

outside diameter	7.625 inches
inside diameter	6.011 inches
Poisson's ratio	0.300
Young's modulus	30×10^6 psi
specific weight	0.327 lb/in^3
radius of gyration	4.04 inches

The specific weight is a fictitious value which accounts for the weight of five inches of lagging bonded to the pipe. Fig. 8 is a schematic of the piping system. The piping section P1 is 84 inches long, P2 is 264 inches long, P3 is 108 inches long, and P4 is 288 inches long.

B. DATA INPUT AND OUTPUT

The input data cards are punched in accordance with the instructions contained in Appendix E. The echo-check of the data is shown in Table II and is arranged as it would appear at the end of the program deck. The system

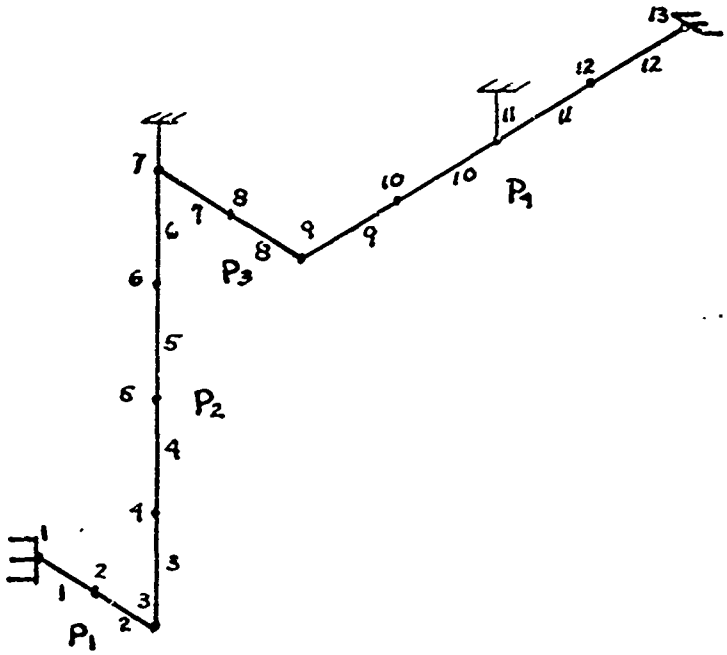

FIG. 8

EXAMPLE PIPING SYSTEM

eigenvalues and eigenvectors are listed in Appendix C, Table VIII. Tables III and IV show the modal velocities and the mode participation factors. The stress output is given in Table V.

This problem required a storage capacity of 174K bytes, and 2.67 minutes of computer time.

TABLE II DATA INPUT, EXAMPLE PROBLEM

PROBLEM NUMBER: 1

NUMBER OF PROBLEMS TO BE SOLVED 1

TOTAL ELEMENTS	TOTAL NODES	DEG OF FREEDOM PER NODE	DEG OF FREEDOM PER ELEMENT	TOTAL GROUPS	SYSTEM TOTAL DEG OF FREEDOM
12	13	6	12	1	66

NODE	X COORD INCHES	Y COORD INCHES	Z COORD INCHES	NODAL BOUNDARY CONDITIONS
1	0.0	0.0	0.0	1
2	42.00	0.0	0.0	0
3	84.00	0.0	0.0	0
4	84.00	0.0	66.00	0
5	84.00	0.0	132.00	0
6	84.00	0.0	198.00	0
7	84.00	0.0	264.00	0
8	138.00	0.0	264.00	0
9	192.00	0.0	264.00	0
10	192.00	72.00	264.00	0
11	192.00	144.00	264.00	0
12	192.00	216.00	264.00	0
13	192.00	288.00	264.00	1

ELEMENT NUMBER	LEFT NODE	RIGHT NODE	GROUP NUMBER
1	1	2	1
2	2	3	1
3	3	4	1
4	4	5	1
5	5	6	1
6	6	7	1
7	7	8	1
8	8	9	1
9	9	10	1
10	10	11	1
11	11	12	1
12	12	13	1

OUTSIDE DIAMETER IN.	INSIDE DIAMETER IN.	POISSONS RATIO	SPECIFIC WEIGHT LB/CU.IN.	YOUNGS MODULUS PSI	SHEAR MODULUS PSI
7.625	6.011	0.300	0.327	3.000D 07	1.154D 07

PIPE GROUP	RADIUS OF GYRATION INCHES
1	4.04

NUMBER OF HANGERS: 2

GLOBAL DOF	IADOF	HANGER STIFFNESS LB/IN.
7	3	9.817477D 05
11	3	9.817477D 05

SPECTRUM TYPE	FREQUENCY TYPE
1	-1

BREAK FREQUENCY HERTZ	CONSTANT VELOCITY INCHES/SEC.
50.00	100.00

SHOCK INPUT FACTORS

X	Y	Z
1.000	1.000	1.000

MODE WEIGHT CORRECTION TYPE 0

TABLE III. MODE VELOCITIES EXAMPLE, PROBLEM

MODE	SPECTRUM VELOCITY INCHES/SEC.
1	100.00
2	100.00
3	100.00
4	100.00
5	100.00
6	100.00
7	100.00
8	100.00
9	100.00
10	88.87
11	84.49
12	75.10
13	71.39
14	58.88
15	53.46
16	47.11
17	42.75
18	42.19
19	32.52
20	30.30
21	29.92
22	29.23
23	27.07
24	26.08
25	25.76
26	25.43
27	22.07
28	21.76
29	17.29
30	17.04
31	16.10
32	15.18
33	14.34
34	14.14
35	13.84
36	12.24
37	12.16
38	12.08
39	10.67
40	10.29
41	10.08
42	9.65
43	9.32
44	8.85
45	8.35
46	8.31
47	8.02
48	7.82
49	7.53
50	7.14
51	6.91
52	6.61
53	6.51
54	5.94
55	5.80
56	5.48
57	5.27
58	4.74
59	4.58
60	4.47
61	4.30
62	3.91
63	3.68
64	3.43
65	2.97
66	2.73

TABLE IV MODE PARTICIPATION FACTORS, EXAMPLE PROBLEM

MODE	MODE PARTICIPATION FACTORS X	Y	Z
1	2.420D 00	-5.433D-01	-2.376D-01
2	8.881D-01	1.936D 00	-8.579D-03
3	6.749D-01	-2.151D-01	1.366D 00
4	1.983D-01	-8.689D-01	-2.739D-01
5	1.813D-01	3.681D-02	4.449D-01
6	1.002D 00	2.950D-02	-4.525D-01
7	-2.002D-01	8.847D-01	-5.983D-02
8	1.342D-01	2.909D-02	-4.132D-01
9	3.281D-01	7.394D-02	-1.452D-01
10	-5.372D-01	2.087D-02	-2.234D-01
11	-1.760D-01	-2.765D-02	3.701D-01
12	-1.461D-01	1.760D-02	-4.358D-01
13	-2.436D-02	-2.057D-02	-2.581D 00
14	2.101D-01	6.413D-01	-2.771D-02
15	2.120D-01	3.617D-02	6.273D-02
16	2.414D-01	-4.206D-01	-5.308D-02
17	-1.557D-01	-1.836D-01	-8.929D-03
18	-2.999D-01	2.770D-01	-9.848D-02
19	-2.523D-03	-1.575D 00	2.783D-02
20	3.728D-02	3.969D-01	4.623D-01
21	-7.001D-02	-7.521D-01	1.832D-01
22	5.680D-02	-2.831D-03	3.390D-01
23	2.730D-02	3.059D-02	1.122D-01
24	1.372D-02	-1.456D-01	-7.496D-02
25	2.096D-01	3.598D-02	5.776D-02
26	-5.284D-02	1.710D-01	-2.951D-03
27	3.018D-01	1.849D-02	-2.046D-01
28	6.857D-02	-4.139D-01	3.612D-02
29	1.502D-01	1.965D-02	2.480D-01
30	1.343D-01	-3.778D-02	5.740D-02
31	1.741D-01	-5.590D-02	-1.286D-01
32	8.736D-02	-7.855D-03	-2.334D-01
33	3.208D-01	-3.368D-02	-1.143D-01
34	2.057D-01	1.094D-01	-7.953D-02
35	-1.832D-02	1.472D-03	-1.704D-01
36	-5.653D-02	-2.661D-01	3.971D-02
37	-2.768D-01	-2.849D-02	-1.585D-01
38	-1.338D-01	4.811D-02	1.038D-01
39	5.282D-01	1.843D-02	-1.114D-01
40	-3.848D-01	-1.936D-01	-4.549D-02
41	3.217D-01	-4.555D-01	1.764D-03
42	-9.813D-02	-2.362D-01	5.590D-02
43	1.810D-01	9.552D-02	8.575D-02
44	-4.923D-01	-6.473D-03	-6.588D-02
45	-1.517D-01	4.671D-03	-9.275D-02
46	4.519D-02	2.312D-01	6.895D-03
47	-3.715D-02	8.888D-04	-4.670D-02
48	-7.110D-02	2.725D-02	-1.066D-01
49	-8.744D-02	4.090D-02	2.807D-02
50	-5.489D-02	-6.571D-02	-1.569D-02
51	3.389D-02	4.898D-02	-3.565D-02
52	8.851D-02	-1.277D-01	5.838D-02
53	-5.329D-02	-6.496D-02	-1.231D-01
54	5.054D-02	1.687D-01	8.028D-03
55	6.481D-04	-2.637D-02	-1.645D-02
56	-2.047D-02	2.814D-01	-7.365D-03
57	-2.748D-03	-5.772D-02	-3.583D-03
58	1.960D-02	-2.591D-02	-1.773D-02
59	-1.541D-01	1.049D-02	8.529D-02
60	-1.548D-01	-1.890D-02	1.147D-01
61	-8.059D-03	2.622D-02	4.919D-02
62	1.948D-03	-1.546D-01	2.357D-03
63	8.517D-05	-1.375D-01	1.066D-04
64	-3.405D-02	-5.919D-03	-3.003D-02
65	5.404D-03	-7.428D-03	6.063D-03
66	2.524D-01	4.617D-05	3.808D-02

TABLE V OCTAHEDRAL SHEARING STRESSES, EXAMPLE PROBLEM, PSI

ELEMENT 1			ELEMENT 7		
9.27155D 03	6.50898D 03	8.40835D 03	1.05515D 04	3.19562D 03	7.84540D 03
6.67426D 03	1.68753D 04	6.48256D 03	4.20334D 03	5.39532D 03	2.89236D 03
6.60959D 03	6.19862D 03	2.61721D 03	5.88687D 03	3.14083D 03	3.86928D 03
4.58857D 03	8.64553D 03	3.09551D 03	4.37262D 03	5.55052D 03	3.82004D 03
ELEMENT 2			ELEMENT 8		
6.60959D 03	6.19262D 03	2.61721D 03	5.88687D 03	3.14083D 03	3.86928D 03
4.58857D 03	8.64553D 03	3.09551D 03	4.37262D 03	5.55052D 03	3.82004D 03
1.87958D 04	7.52777D 03	7.71406D 03	2.65630D 03	3.21345D 03	3.56775D 03
4.96003D 03	7.39236D 03	1.94809D 03	7.42439D 03	1.31690D 04	4.40520D 03
ELEMENT 3			ELEMENT 9		
5.76459D 03	7.61243D 03	1.77620D 03	7.59211D 03	1.27242D 04	4.36537D 03
1.88813D 04	6.47128D 03	7.52389D 03	2.46920D 03	2.81124D 03	3.50809D 03
4.45858D 03	5.76172D 03	3.03388D 03	5.77644D 03	1.01042D 04	3.20111D 03
1.11412D 04	4.91469D 03	2.67322D 03	4.85717D 03	2.06310D 03	8.55130D 03
ELEMENT 4			ELEMENT 10		
4.45858D 03	5.76172D 03	3.03388D 03	5.77644D 03	1.01042D 04	3.20111D 03
1.11412D 04	4.91468D 03	2.67322D 03	4.85717D 03	2.06310D 03	8.55130D 03
4.56188D 03	9.14655D 03	3.56861D 03	7.21896D 03	6.12863D 03	4.52053D 03
7.49948D 03	4.30096D 03	6.18924D 03	9.86817D 03	3.48853D 03	1.57074D 04
ELEMENT 5			ELEMENT 11		
4.56168D 03	9.14656D 03	3.56861D 03	6.94094D 03	6.08336D 03	4.58679D 03
7.49948D 03	4.30096D 03	6.18924D 03	9.86817D 03	3.48853D 03	1.57074D 04
4.54386D 03	7.59655D 03	4.76524D 03	1.04300D 04	4.37922D 03	2.33575D 03
6.25280D 03	4.33059D 03	7.08160D 03	3.53535D 03	2.30537D 03	9.55294D 03
ELEMENT 6			ELEMENT 12		
4.54386D 03	7.59656D 03	4.76524D 03	1.04300D 04	4.37922D 03	2.33575D 03
6.25280D 03	4.33059D 03	7.08160D 03	3.53534D 03	2.30537D 03	9.55394D 03
3.61390D 03	4.92147D 03	2.47225D 03	1.76977D 04	1.27516D 04	6.00477D 03
1.08673D 04	4.38141D 03	7.71113D 03	6.15350D 03	2.75150D 03	1.60062D 04

VI. DISCUSSION

Some of the limitations of the capabilities of the program developed above are considered here.

A. CONFIGURATION LIMITATIONS

The restrictions that pipe axes must be parallel to a global axis and that finite radius bends are not represented provide the principal limitations on the configurations that can be modeled. There are no inherent limitations on allowable topological complexity.

Certain additional features of real piping systems that are not represented in the present modeling include added mass due to fittings and pipe contents, and partial fixity or elastic restraint at ends or intermediate points.

Despite these limitations, it is believed that a significant fraction of current piping systems can be adequately modeled using the present program.

B. SIZE LIMITATIONS

For the present purpose, the appropriate measure of system size is the number of degrees of freedom of the system model. This number n, which bears no direct relation to physical size, determines the core storage requirements and execution time of the program. For approximate estimation, storage requirements are proportional to n^2 and execution time is proportional to n^3. Using the data from the example problem, one can estimate that a 100

degree-of-freedom system would require about 400K bytes of core storage and about 9 minutes execution time.

Increasing the problem size also increases the round-off errors. Because double-precision arithmetic (56 bit mantissa) is used throughout, observed round-off effects have been found negligible (a maximum of 1 unit in the 6th significant digit for n = 66) in all applications to date. The very small errors detected are attributed to the residual eigenvector errors present when the Jacobi rotations are terminated.

In view of the foregoing considerations, it is believed that the practical upper limit on problem size (with the IBM 360/67) is about n = 110 and is determined by core storage capacity.

VII. CONCLUSIONS

It is concluded that an effective program has been developed for determining shock-induced stresses in piping systems. The principal limitations of the present version can be removed by adding features that are clearly within the current state-of-the-art. Recommended additions are listed below:

1. Remove the pipe axes orientation restriction so that a general piping system can be analyzed.

2. Develop element stiffness and inertia matrices for bends.

3. Modify the program so that partial fixity and elastic restraint at the ends or intermediate points may be included in the boundary conditions.

4. Include the mass effects of valves, fittings, and pipe contents.

5. Replace the Jacobi rotation method by a more efficient eigenvalue-eigenvector algorithm.

APPENDIX A

ELEMENT STIFFNESS AND INERTIA MATRICES

TABLE VI Element Stiffness Matrix

$$
\underline{K}^e = \begin{bmatrix}
\frac{EA}{\ell} & & & & & & & & & & & \\
0 & \frac{12EI}{\ell^3} & & & & & & & & & & \\
0 & 0 & \frac{12EI}{\ell^3} & & & & & & & & & \\
0 & 0 & 0 & \frac{2GI}{\ell} & & & & & & & & \\
0 & 0 & \frac{-6EI}{\ell^2} & 0 & \frac{4EI}{\ell} & & & & & & & \\
0 & \frac{6EI}{\ell^2} & 0 & 0 & 0 & \frac{4EI}{\ell} & & & & & & \\
\frac{EA}{\ell} & 0 & 0 & 0 & 0 & 0 & \frac{EA}{\ell} & & & & & \\
0 & \frac{12EI}{\ell^3} & 0 & 0 & 0 & \frac{6EI}{\ell^2} & 0 & \frac{12EI}{\ell^3} & & & & \\
0 & 0 & \frac{12EI}{\ell^3} & 0 & \frac{6EI}{\ell^2} & 0 & 0 & 0 & \frac{12EI}{\ell^3} & & & \\
0 & 0 & 0 & \frac{2GI}{\ell} & 0 & 0 & 0 & 0 & 0 & \frac{2GI}{\ell} & & \\
0 & 0 & \frac{6EI}{\ell^3} & 0 & \frac{2EI}{\ell} & 0 & 0 & 0 & \frac{6EI}{\ell^2} & 0 & \frac{4EI}{\ell} & \\
0 & \frac{6EI}{\ell^2} & 0 & 0 & 0 & \frac{2EI}{\ell} & 0 & \frac{6EI}{\ell^2} & 0 & 0 & 0 & \frac{4EI}{\ell}
\end{bmatrix}
$$

Symmetric

TABLE VII Element Inertia Matrix

$$
\underline{M}^e = \begin{bmatrix}
\frac{\rho A \ell}{3} & & & & & & & & & & & \\
0 & \frac{156\rho A\ell}{420} & & & & & & & & & & \\
0 & 0 & \frac{156\rho A\ell}{420} & & & & & & & & & \\
0 & 0 & 0 & \frac{J\ell}{3} & & & & & & & & \\
0 & 0 & -\frac{22\rho A\ell^2}{420} & 0 & \frac{4\rho A\ell^3}{420} & & & & & & & \\
0 & \frac{22\rho A\ell^2}{420} & 0 & 0 & 0 & \frac{4\rho A\ell^3}{420} & & & & & & \\
\frac{\rho A\ell}{6} & 0 & 0 & 0 & 0 & 0 & \frac{\rho A\ell}{3} & & & & & \\
0 & \frac{54\rho A\ell}{420} & 0 & 0 & 0 & \frac{13\rho A\ell^2}{420} & 0 & \frac{156\rho A\ell}{420} & & & & \\
0 & 0 & \frac{54\rho A\ell}{420} & 0 & -\frac{13\rho A\ell^2}{420} & 0 & 0 & 0 & \frac{156\rho A\ell}{420} & & & \\
0 & 0 & 0 & \frac{J\ell}{6} & 0 & 0 & 0 & 0 & 0 & \frac{J\ell}{3} & & \\
0 & 0 & \frac{13\rho A\ell}{420} & 0 & -\frac{3\rho A\ell^3}{420} & 0 & 0 & 0 & \frac{22\rho A\ell^2}{420} & 0 & \frac{4\rho A\ell^3}{420} & \\
0 & -\frac{13\rho A\ell^2}{420} & 0 & 0 & 0 & -\frac{3\rho A\ell^3}{420} & 0 & -\frac{22\rho A\ell^2}{420} & 0 & 0 & 0 & \frac{4\rho A\ell^3}{420}
\end{bmatrix}
$$

Symmetric

APPENDIX B: VELOCITY SHOCK SPECTRA AND MODAL RESPONSE[1]

A shock spectrum exhibits the maximum response displacement of a single degree-of-freedom system whose base is subjected to the shock motion. Consider a single degree-of-freedom whose base has a shock displacement s, and whose displacement relative to the base is z. The equation of motion is

$$\ddot{z} + \omega^2 z = -\ddot{s} \tag{B.1}$$

where ω is the natural circular frequency of free vibration with the base fixed (s = 0). If z_{max} represents the extreme value of z in response to the shock motion s, then the displacement shock spectrum for that shock motion is a plot of z_{max} versus ω. Equivalent information can be given in the form of a velocity shock spectrum. In this form, the spectrum velocity $\tilde{V}$ is related to the maximum displacement z_{max} by

$$\tilde{V} = \omega z_{max} \tag{B.2}$$

To develop the equations for finding modal response from shock spectrum data, let $\underline{w}$ be the vector of absolute

---

[1]This Appendix is based on material presented by Prof. R.E. Newton in the course ME4522, September 1971.

displacements in the system degrees-of-freedom. For a uniaxial translation s of the base, this may be expressed as

$$\underline{w} = \underline{q} + \underline{u}s \tag{B.3}$$

where $\underline{q}$ is the vector of displacements relative to the base, and $\underline{u}$ is a vector of constants. To illustrate the meanings of these vectors, consider the beam element of Fig. 9.

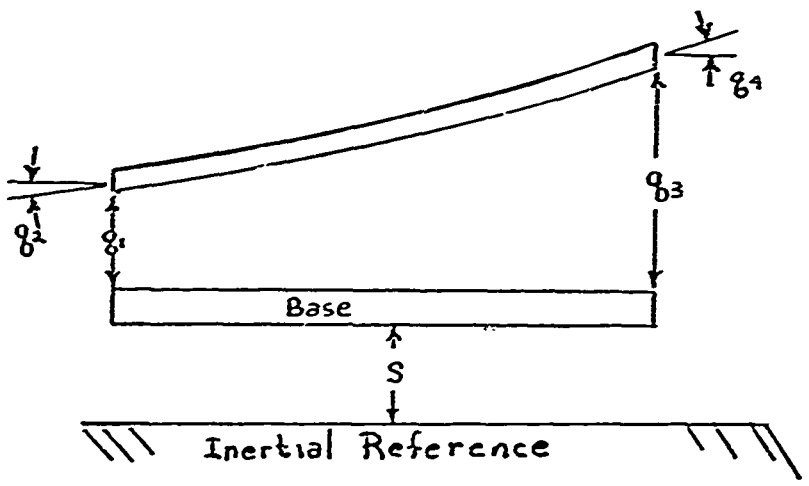

FIG. 9

BEAM ELEMENT COORDINATES

For this example, $\underline{q} = [q_1\ q_2\ q_3\ q_4]^T$, $\underline{w} = [q_1+s\ q_2\ q_3+s\ q_4]^T$, and $\underline{u} = [1\ 0\ 1\ 0]$. It can be seen that $\underline{u}$ represents the

absolute displacements resulting from unit base translation.

The equations of motion of an n degree-of-freedom system with base motion may be written

$$\underline{M}\,\ddot{\underline{w}} + \underline{K}\,\underline{q} = 0$$

Using Eq. B.3, this becomes

$$\underline{M}\,\ddot{\underline{q}} + \underline{K}\,\underline{q} = -\,\underline{M}\,\underline{u}\,\ddot{s}$$

Using the substitution $\underline{q} = \underline{V}\,\underline{p}$ where $\underline{p}$ is the vector of principal coordinates, this may be rewritten as

$$\underline{V}^T\,\underline{M}\,\underline{V}\,\ddot{\underline{p}} + \underline{V}^T\,\underline{K}\,\underline{V}\,\underline{p} = -\underline{V}^T\,\underline{M}\,\underline{u}\,\ddot{s}$$

or

$$\ddot{\underline{p}} + \underline{\Omega}^2\,\underline{p} = -\,\underline{b}\,\ddot{s} \qquad \text{(B.4)}$$

where $\underline{b} = \underline{V}^T\,\underline{M}\,\underline{u}$. Eq. B.4 is equivalent to the scalar equations

$$\ddot{p}_r + \omega_r^{\,2}\,p_r = -\,b_r\,\ddot{s}\ , \quad (r=1,2,\ldots,n) \qquad \text{(B.4a)}$$

where p_r and b_r are the rth components of $\underline{p}$ and $\underline{b}$, respectively, and ω_r is the circular frequency of mode r.

The component b_r is called the mode participation factor for mode r. It is given by

$$b_r = \underline{v}^{(r)^T} \underline{M}\, \underline{u} \tag{B.5}$$

where $\underline{v}^{(r)}$ is the eigenvector for mode r (rth column of $\underline{V}$).

Comparing Eq. B.4a with Eq. B.1, and using Eq. B.2, the maximum response in mode r may be expressed as

$$(p_r)_{max} = b_r\, \tilde{V}_r/\omega_r \tag{B.6}$$

where $\tilde{V}_r$ is the spectrum velocity at frequency ω_r. Using Eq. B.6, the corresponding extremum for the relative displacement vector $\underline{q}$ is

$$\underline{q}_{max} = \underline{v}^{(r)}\; b_r\, \tilde{V}_r/\omega_r \tag{B.6a}$$

Eq. B.6a is used for calculating peak modal responses in order to find stresses.

In shipboard shock studies, it has been found that massive equipment may partially suppress the base motion [6]. This may be taken into account by appropriate modification of the spectrum velocity $\tilde{V}_r$. Such a correction requires apportionment of the system mass among the modes. The modal mass for the rth mode is taken to be

$$m_r = b_r^{\,2} \tag{B.7}$$

APPENDIX C: EXAMPLE PROBLEM EIGENVALUES AND EIGENVECTORS

Table VIII shows the first six eigenvalues and the corresponding eigenvectors of the example problem. The eigenvalue (square of the circular frequency) appears at the head of a column followed by the components of the eigenvector grouped by nodes. The remaining eigenvalues and eigenvectors are omitted. Spacing of the eigenvalues remains approximately uniform throughout the remainder of the set. The largest eigenvalue is 1.32×10^8.

TABLE VIII

EXAMPLE PROBLEM EIGENVALUES AND EIGENVECTORS

3.20210D 02	1.76822D 03	4.28394D 03	7.28442D 03	1.36643D 04	1.93694D 04
3.73419D-05	1.34663D-05	2.08472D-04	-1.14030D-04	-4.65104D-04	9.20240D-04
2.41956D-03	1.09003D-02	-2.65694D-02	-1.28407D-01	8.53335D-02	5.24366D-02
4.49829D-03	1.04163D-03	1.10664D-02	-5.21380D-03	-1.59767D-02	2.80391D-02
2.61317D-04	-1.29764D-03	4.11111D-04	1.33441D-03	1.67038D-04	3.87608D-04
-9.72255D-05	-2.24799D-05	-2.55767D-04	1.12357D-04	3.09915D-04	-5.48334D-04
1.22736D-04	3.96445D-04	-1.13431D-03	-5.43247D-03	3.61351D-03	2.20679D-03
7.46830D-05	2.69314D-05	4.16900D-04	-2.28018D-04	-9.29892D-04	1.83959D-03
1.09429D-02	2.30366D-02	-8.44930D-02	-4.00728D-01	2.67855D-01	1.62840D-01
-1.65671D-03	-3.86593D-04	-1.21133D-03	1.91395D-03	1.14491D-02	-1.90614D-02
5.22618D-04	-2.59488D-03	8.21907D-04	2.66708D-03	3.33668D-04	7.73869D-04
5.07228D-04	1.17520D-04	1.10921D-03	-5.85658D-04	-2.05621D-03	3.55172D-03
2.90708D-04	6.00079D-05	-1.50032D-03	-6.91251D-03	4.70215D-03	2.82479D-03
7.58645D-02	1.66544D-02	1.46159D-01	-7.41273D-02	-2.39666D-01	3.93597D-01
-3.27225D-02	2.26814D-01	-1.37883D-01	-5.51473D-01	2.05302D-01	8.26126D-02
-1.50207D-03	-3.50837D-04	-8.56762D-04	1.73363D-03	1.08602D-02	-1.80408D-02
7.81717D-04	-3.29915D-03	5.61288D-04	9.10543D-04	1.87720D-03	1.71397D-03
1.68048D-03	3.47592D-04	2.71283D-03	-1.33431D-03	-3.91045D-03	5.85429D-03
6.80364D-04	-1.36944D-03	-1.50438D-03	-6.23499D-03	4.76584D-03	2.82770D-03
2.07798D-01	4.11349D-02	2.87310D-01	-1.40471D-01	-3.87969D-01	5.38314D-01
-8.98682D-02	4.26350D-01	-1.35861D-01	-4.47907D-01	2.41448D-02	-4.12832D-02
-1.34738D-03	-3.15007D-04	-5.01745D-04	1.55477D-03	1.02530D-02	-1.69773D-02
9.33588D-04	-2.55823D-03	-7.25499D-04	-4.14818D-03	3.31228D-03	1.74582D-03
2.21439D-03	3.62459D-04	1.11325D-03	-4.79429D-04	-4.39684D-05	-2.27196D-03
1.06992D-03	-2.79781D-03	-1.50558D-03	-5.53735D-03	4.80072D-03	2.80638D-03
3.55428D-01	6.12720D-02	2.50525D-01	-1.25653D-01	-2.50044D-01	1.42163D-01
-1.54172D-01	5.49921D-01	-3.75462D-02	-4.37906D-02	-1.78932D-01	-1.13515D-01
-1.19263D-03	-2.79107D-04	-1.46464D-04	1.37451D-03	9.62857D-03	-1.58733D-02
1.00528D-03	-1.16814D-03	-2.22960D-03	-7.48374D-03	2.47072D-03	3.15195D-04
2.17152D-03	2.32548D-04	-2.40872D-03	8.99931D-04	3.61242D-03	-8.32171D-03
1.45933D-03	-4.22399D-03	-1.50393D-03	-4.82186D-03	4.80657D-03	2.76102D-03
4.84437D-01	7.13644D-02	-3.72791D-02	-3.99987D-02	-5.13765D-02	-3.03607D-01
-2.21964D-01	5.92298D-01	1.51322D-01	4.44113D-01	-2.81879D-01	-9.59751D-02
-1.03784D-03	-2.43147D-04	2.08894D-04	1.19302D-03	8.98798D-03	-1.47315D-02
1.05064D-03	-3.18701D-04	-3.43859D-03	-6.62349D-03	8.15115D-04	-5.00562D-04
1.67614D-03	8.26620D-05	-6.26385D-03	1.46556D-03	1.02998D-03	-3.16349D-03
1.84853D-03	-5.64686D-03	-1.49942D-03	-4.09082D-03	4.78336D-03	2.69201D-03
4.84451D-01	7.13490D-02	-3.73090D-02	-3.98607D-02	-5.06787D-02	-3.04055D-01
-1.15968D-01	2.76427D-01	7.10119D-02	2.25377D-01	-5.03221D-02	2.48256D-02
-7.85774D-02	-2.70496D-03	3.94052D-01	-7.17064D-02	7.37544D-02	-3.78876D-02
1.11158D-03	-1.87342D-04	-4.58183D-03	-3.76693D-03	3.14625D-06	-7.11803D-06
1.22764D-03	1.56667D-05	-7.87601D-03	1.20320D-03	-2.84429D-03	3.16061D-03
2.06739D-03	-5.78156D-03	-1.44866D-03	-4.12090D-03	3.23151D-03	1.32777D-03
4.84451D-01	7.13231D-02	-3.73258D-02	-3.96989D-02	-4.99239D-02	-3.04019D-01
-5.32383D-05	1.19216D-03	2.46212D-04	4.44083D-04	-2.33473D-03	-1.37280D-03
-1.37212D-01	-2.73559D-03	9.11612D-01	-1.28227D-01	2.57922D-01	-2.65755D-01
1.17242D-03	-5.58841D-05	-5.71925D-03	-9.02245D-04	-8.08835D-04	4.86367D-04
9.79364D-04	-6.81708D-06	-7.35527D-03	9.23536D-04	-3.53232D-03	4.54346D-03
2.21120D-03	-4.07980D-03	-1.10736D-03	-4.11453D-03	-2.12272D-03	-2.71595D-03
3.22377D-01	2.42176D-01	1.17887D-02	2.07224D-01	3.02729D-01	6.34815D-02
-3.99309D-05	8.94387D-04	1.84794D-04	3.33477D-04	-1.75514D-03	-1.03302D-03
-5.55585D-02	-2.96294D-03	3.68466D-01	-1.03465D-01	1.52701D-01	-1.74909D-01
1.02374D-03	3.44072D-05	-6.24051D-03	1.29316D-03	-2.12127D-03	2.21104D-03
7.34443D-04	-5.11853D-06	-5.53103D-03	6.95771D-04	-2.67172D-03	3.44875D-03
2.25446D-03	-7.87964D-04	-4.40548D-04	-2.32091D-03	-5.61151D-03	-6.11044D-03
1.67489D-01	2.10548D-01	2.93284D-02	2.58693D-01	5.25110D-01	3.67396D-01
-2.66216D-05	5.96387D-04	1.23261D-04	2.22516D-04	-1.17205D-03	-6.90308D-04
-6.52906D-04	-8.49562D-05	5.64067D-03	-2.71326D-03	3.42056D-03	-4.39168D-03
4.23951D-04	2.89245D-05	-3.01232D-03	9.95898D-04	-1.42807D-03	1.73252D-03
4.89697D-04	-3.41520D-06	-3.69430D-03	4.65336D-04	-1.79190D-03	2.21889D-03
1.98080D-03	1.42427D-03	8.40913D-05	8.95044D-04	3.08803D-04	-1.28743D-03
4.81811D-02	8.04306D-02	1.34629D-02	1.17881D-01	2.76985D-01	2.29826D-01
-1.33110D-05	2.98232D-04	6.16494D-05	1.11317D-04	-5.86611D-04	-3.45644D-04
7.31550D-03	4.82069D-04	-5.24291D-02	1.71404D-02	-2.55900D-02	3.17866D-02
-9.92107D-05	-6.35449D-06	6.95480D-04	-2.21904D-04	3.24666D-04	-3.92987D-04
2.44869D-04	-1.70841D-06	-1.84924D-03	2.33115D-04	-8.99185D-04	1.16538D-03
1.24990D-03	1.84042D-03	2.85685D-04	2.48881D-03	5.46477D-03	4.22612D-03

APPENDIX D: CALCULATION OF MODIFIED SPECIFIC WEIGHT AND RADIUS OF GYRATION

There is negligible effect on the stiffness of the pipe element from the lagging on the pipe; however, the lagging does contribute significantly to the mass of the element. By appropriately modifying the pipe element specific weight and radius of gyration, the mass effect of the lagging can be included. The modified specific weight is

$$\gamma_m = (W_p + W_L)/A \tag{C.1}$$

where γ_m is the modified specific weight of the pipe element, and the sum $(W_p + W_L)$ is the combined weight of the lagging and pipe per unit length. The radius of gyration is given by the relation

$$J_p + J_L = (m_p + m_L)\, r^2 \tag{C.2}$$

where J_p and J_L are the mass moment of inertia per unit length of the pipe and lagging, respectively, $(m_p + m_L)$ is the combined mass of the pipe and lagging per unit length, and r is the radius of gyration.

```
C*****************************************************************
C
C
C              LIST OF SYMBOLS USED IN PROGRAM SHOKPI
C
C
C        BX(I)......MODE PARTICIPATION FACTOR I, X AXIS SHOCK INPUT
C        BY(I)......MODE PARTICIPATION FACTOR I, Y AXIS SHOCK INPUT
C        BZ(I)......MODE PARTICIPATION FACTOR I, Z AXIS SHOCK INPUT
C        BMOWTE.....END COORDINATE OF LOG MODAL WEIGHT VS CORRECTED
C                   SPECTRUM VELOCITY CURVE
C        BMOWTS.....STARTING COORDINATE OF LOG MODAL WEIGHT VS CORRECTED
C                   SPECTRUM VELOCITY CURVE
C        DO(I)..... .OUTSIDE DIAMETER, PIPE MATERIAL GROUP I, INCHES
C        DI(I)......INSIDE PIPE DIAMETER, PIPE MATERIAL GROUP I, INCHES
C        E(I).......YOUNG'S MODULUS, PIPE MATERIAL GROUP I, LB/IN.**2
C        EFRAD......EFFECTIVE RADIUS OF GYRATION, INCHES
C        EIVU.......MODAL COLUMN VECTOR
C        EIVUCO.....FREQUENCY CUTOFF VALUE FOR STRESS ANALYSIS, HERTZ
C        EIVR.......MODAL MATRIX
C        FSEG(I)....FREQUENCY AT BEGINNING OF SEGMENT I OF VELOCITY
C                   SPECTRUM, HERTZ
C        G(I).......SHEAR MODULUS, PIPE MATERIAL GROUP I, LB/IN.**2
C        HSTIF......HANGER STIFFNESS
C        IADOF......DEGREE OF FREEDOM INDEX FOR HANGER
C                            1: HANGER DIRECTION X GLOBAL
C                            2: HANGER DIRECTION Y GLOBAL
C                            3: HANGER DIRECTION Z GLOBAL
C        IEL........ELEMENT NUMBER
C        IELGLO.....ADDRESS MATRIX FOR AXES ALIGNMENT
C        IFRQTY.....INDEX USED TO SPECIFY METHOD OF SELECTION OF TOTAL
C                   NUMBER OF MODAL FREQUENCIES FOR STRESS ANALYSIS
C                           -1: METHOD TO BE DETERMINED BY USER
C                            0: CUTOFF FREQUENCY TEN X FUNDAMENTAL
C                            1: CUTOFF FREQUENCY IS DESIGNATED BY USER
C        IGNN.......GLOBAL NODE NUMBER OF HANGER LOCATION
C        IGRP(I)....ELEMENT MATERIAL AND SIZE GROUP MATRIX
C        IGRPT......TOTAL NUMBER OF GROUPS
C        ISPECTY....INDEX USED TO SPECIFY METHOD OF ANALYZING THE SHOCK
C                   VELOCITY SPECTRUM
C                           -1: METHOD TO BE DETERMINED BY USER
C                            0: SHOCK SPECTRUM APPROXIMATED BY STRAIGHT
C                               LINE SEGMENTS
C                            1: SHOCK SPECTRUM IS CONSTANT VELOCITY TO
C                               FN, THEN CONSTANT ACCELERATION
C        JSEG.......NUMBER OF STRAIGHT LINE SEGMENTS USED TO REPRESENT
C                   THE SHOCK SPECTRUM PLUS 1
C        MOWTTY.....INDEX USED TO SPECIFY MODAL WEIGHT CORRECTION TO
```

```
C                    SPECTRUM VELOCITY
C                              -1: TO BE DETERMINED BY USER
C                               0: NO CORRECTION TO BE APPLIED
C                               1: SPECTRUM VELOCITY CORRECTED USING LOG
C                                  OF MODAL WEIGHT
C        NBCN(I)....BOUNDARY CONDITION ON NODE I
C                               0: FREE
C                               1: CLAMPED
C        NDOFT......TOTAL NUMBER OF DEGREES OF FREEDOM OF SYSTEM
C        NET........TOTAL NUMBER OF ELEMENTS OF THE SYSTEM
C        NHANG......NUMBER OF HANGERS IN THE SYSTEM
C        NN(1,K)....FIRST NODE NUMBER ELEMENT K
C        NN(2,K)....SECOND NODE NUMBER ELEMENT K
C        NNA........ADDRESS MATRIX ASSEMBLED NODES FROM GLOBAL NODES
C        NNG........ADDRESS MATRIX GLOBAL NODES FROM ASSEMBLED NODES
C        NNPE.......NUMBER OF NODES PER ELEMENT
C        NPROB......NUMBER OF PIPING SYSTEMS TO BE ANALYZED BY PROGRAM
C        NNT........TOTAL NUMBER OF NODES IN THE SYSTEM
C        POI(I).....POISSON'S RATIO, PIPE MATERIAL GROUP I
C        SPWT(I)....SPECIFIC WEIGHT, PIPE MATERIAL GROUP I, LB/IN.**3
C        VOVOTE.....VELOCITY RATIO AT END OF MODAL WEIGHT CORRECTION
C                   CURVE
C        VOVOTS.....VELOCITY RATIO AT START OF MODAL WEIGHT CORRECTION
C                   CURVE
C        VSEG(I)....VELOCITY AT BEGINNING OF SEGMENT I OF VELOCITY
C                   SPECTRUM, INCHES/SEC.
C        X(I)......GLOBAL X COORDINATE, NODE I, INCHES
C        Y(I)......GLOBAL Y COORDINATE, NODE I, INCHES
C        Z(I)......GLOBAL Z COORDINATE, NODE I, INCHES
C        XSPCFR.....SHOCK SPECTRUM SCALING FACTOR X DIRECTION INPUT
C        YSPCFR.....SHOCK SPECTRUM SCALING FACTOR Y DIRECTION INPUT
C        ZSPCFR.....SHOCK SPECTRUM SCALING FACTOR Z DIRECTION INPUT
C
C*****************************************************************
```

```
C*****************************************************************
C
C
C                    INSTRUCTIONS FOR PROGRAM SHOKPI
C
C
C      A. GENERAL REMARKS
C         PROGRAM SHOKPI MAY BE USED IN THE STRESS ANALYSIS OF A THREE
C      DIMENSIONAL PIPING SYSTEM  UNDER SHOCK LOADS. THE FOLLOWING
C      LIMITATIONS ARE IMPOSED:
C         1. ALL STRUCTURAL DISCRETIZATIONS ARE STRAIGHT AND PIECEWISE
C            UNIFORM
C         2. ALL FINITE ELEMENT CENTERLINES ARE PARALLEL TO A GLOBAL AXIS
C         3. ALL CONFIGURATION ENDS ARE CLAMPED
C         4. SHEAR DEFLECTION AND ROTARY INERTIA IN BENDING IS NEGLECTED
C         5. ALL JOINTS ARE ORTHOGONAL AND THERE IS NO CURVATURE IN THE
C            MODEL
C      THE PROGRAM IS CAPABLE OF ANALYZING ONE OR MORE SYSTEMS
C
C      B. THE SEQUENCE IN NUMBERING THE NODAL POINTS OF THE SYSTEM IS
C      ARBITRARY
C
C      C. COORDINATE SYSTEMS
C         THE GEOMETRY OF THE PIPING SYSTEM IS  THE COORDINATES MEASURED
C      FROM THE ORIGIN OF A SET OF MUTUALLY ORTHOGONAL X, Y, AND Z AXES
C      SATISFYING THE RIGHT HAND RULE. THIS COORDINATE SYSTEM IS THE
C      GLOBAL SET
C         EACH FINITE ELEMENT HAS   MUTUALLY ORTHOGONAL 1,2, AND 3 AXES
C      SATISFYING THE RIGHT HAND RULE WITH THE 1 AXIS IN THE DIRECTION OF
C      THE CENTER LINE OF THE ELEMENT. THIS COORDINATE SYSTEM IS THE
C      LOCAL SYSTEM
C
C      D. PIPING MATERIAL AND SIZE PROPERTIES
C         THE PIPING ELEMENT SIZE AND MATERIAL PROPERTIES ARE THOSE
C      BETWEEN THE TWO NODAL POINTS ON THE ELEMENT. EACH PIPE ELEMENT IS
C      ASSIGNED TO A PIPE GROUP WHICH CONTAINS THE FOLLOWING INFORMATION:
C               A. OUTSIDE AND INSIDE DIAMETERS
C               B. YOUNGS MODULUS
C               C. POISSON'S RATIO
C               D. SPECIFIC WEIGHT OF THE MATERIAL
C               E. RADIUS OF GYRATION
C
C         D1. HANGERS
C             THE PROGRAMER HAS TO DETERMINE THE GLOBAL LOCATION OF
C         THE HANGERS AND THE HANGER STIFFNESS. THE STIFFNESS IS THEN
C         PLACED INTO THE ASSEMBLED STIFFNESS MATRIX AT THE END OF
C         SUBROUTINE FORM.
C         D2. PIPING SPECIFIC WEIGHT AND RADIUS OF GYRATION
```

```
C          THE PROGRAMER HAS TO DETERMINE THE EFFECTIVE SPECIFIC
C       WEIGHT OF THE PIPE AND THE LAGGING, AND ALSO THE EFFECTIVE
C       RADIUS OF GYRATION FOR TORSIONAL INERTIA.
C     E. DATA FORMAT
C     1) CARD A            (USE ONLY ONCE)
C          COL 1-5         NUMBER OF SYSTEMS TO BE ANALYZED (NPROB)    I5
C     2) CARD B            (USE ONCE FOR EACH SYSTEM)
C          COL 1-5         TOTAL NUMBER OF ELEMENTS (NET)              I5
C          COL 6-10        TOTAL NUMBER OF NODES (NNT)                 I5
C          COL 11-15       NUMBER OF DEGREES OF FREEDOM PER NODE
C                          (NDOFPN)                                    I5
C          COL 16-20       NUMBER OF PIPE MATERIAL GROUPS (IGRPT)      I5
C          COL 21-25       TOTAL SYSTEM DEGREES OF FREEDOM (NDOFT)     I5
C     3) SUCCEEDING CARDS          (ONE FOR EACH NODE)
C          COL 1-9         X COORDINATE, INCHES                        D9.1
C          COL 10-18       Y COORDINATE, INCHES                        D9.1
C          COL 19-27       Z COORDINATE, INCHES                        D9.1
C          COL 28-32       NODAL BOUNDARY CONDITION  (NBCN)
C                                0: FREE
C                                1: CLAMPED
C     4) SUCCEEDING CARDS  (ONE FOR EACH ELEMENT)
C          COL 1-5         ELEMENT NUMBER (IEL)                        I5
C          COL 6-10        ELEMENT FIRST NODE NUMBER (NN(1,K))         I5
C          COL 11-15       ELEMENT SECOND NODE NUMBER (NN(2,K))        I5
C          COL 16-20       ELEMENT PIPE MATERIAL GROUP (IGPP(I))       I5
C     5) SUCCEEDING CARDS  (ONE FOR EACH PIPE MATERIAL GROUP)
C          COL 1-10        ELEMENT OUTSIDE DIAMETER, INCHES  (DO(I))   D10.3
C          COL 11-20       ELEMENT INSIDE DIAMETER, INCHES (DI(I))     D10.3
C          COL 21-30       POISSON'S RATIO     (POI(I))                D10.3
C          COL 31-40       SPECIFIC WEIGHT OF MATERIAL (SPWT),LB/CUIN  D10.3
C          COL 41-50       YOUNG'S MODULUS, LB/SQ.IN.  (E(I))          D10.3
C     5A) SUCCEEDING CARDS (ONE FOR EACH PIPE MATERIAL GROUP)
C          COL 1-7         EFFECTIVE RADIUS OF GYRATION (EFRAD)        D7.2
C     5B) SUCCEEDING CARDS IF AND ONLY IF THE SYSTEM HAS HANGERS
C                          (ONE FOR EACH SYSTEM)
C          COL 1-5         NUMBER OF HANGERS IN SYSTEM (NHANG)         I5
C     5C) SUCCEEDING CARDS IF AND ONLY IF NHANG IS NOT EQUAL TO 0
C          COL 1-5         ASSEMBLED NODE NUMBER LOCATION (IGNN)       I5
C          COL 6-10        HANGER DIRECTION INDIX (IADOF)              I5
C                                1: X GLOBAL DIRECTION
C                                2: Y GLOBAL DIRECTION
C                                3: Z GLOBAL DIRECTION
C          COL 11-21     HANGER STIFFNESS (HSTIF)                      D11.6
C     6) CARD C            (ONCE FOR EACH SYSTEM)
C          COL 1-5         SPECTRUM TYPE INDEX (ISPCTY)                I5
C                               -1: TO BE DETERMINED BY USER
C                                0: STRAIGHT LINE REPRESENTATION
C                                1: CONSTANT VELOCITY-CONSTANT ACCELERATION
C
```

```
C          COL 6-10     FREQUENCY TYPE INDEX  (IFRQTY)                I5
C                            -1: USE ALL MODES
C                             0: 10X THE FUNDAMENTAL FREQUENCY
C                             1: CUTOFF FREQUENCY IS DESIGNATED
C          COL 11-15    NUMBER OF STRAIGHT LINE SEGMENTS   (JSEG)   I5
C                       REPRESENTING  SPECTRUM +1
C                             0: OTHER METHOD OF REPRESENTATION
C       CARD C1) IF AND ONLY IF IFRQTY IS 1
C          COL 1-11     CUTOFF FREQUENCY, HERTZ                      D11.4
C       CARD C11) IF AND ONLY IF ISPCTY IS 0 (ONE CARD FOR EACH COORD)
C          COL 1-9      FREQUENCY OF STARTING COORD OF ST. LINE
C                       REPRESENTATION (FSEG)                        D9.2
C          COL 10-18    SPECTRUM VELOCITY OF STARTING COORD OF ST. LINE
C                       REPRESENTATION (VSEG)                        D9.2
C       CARD C12) IF AND ONLY IF ISPCTY IS 1  (ONE CARD)
C          COL 1-10     FREQUENCY AT WHICH CONSTANT ACCELERATION
C                       OCCURES  (FSEG(1))                           D10.3
C          COL 11-20    CONSTANT VELOCITY VALUE (VSEG(1))            D10.3
C    7) CARD D)         (USE ONLY ONCE FOR EACH SYSTEM)
C          COL 1-10     SHOCK SPECTRUM SCALING FACTOR X DIRECTION
C                       (XSPCFR)                                     D10.3
C          COL 11-20    SHOCK SPECTRUM SCALING FACTOR Y DIRECTION
C                       (YSPCFR)                                     D10.3
C          COL 21-30    SHOCK SPECTRUM SCALING FACTOR Z DIRECTION
C                       (ZSPCFR)                                     D10.3
C    8) CARD E)         (USE ONLY ONCE FOR EACH SYSTEM)
C          COL 1-5      INDEX OF MODAL WEIGHT CORRECTION TYPE        I5
C                            -1: TO BE DETERMINED BY USER
C                             0: NO CORRECTION DESIRED
C                             1: LOG MODAL WEIGHT CORRECTION APPLIED
C       CARD E1) IF AND ONLY IF MCWTTY IS 1
C          COL 1-10     STARTING COORD VELOCITY RATIO (VC/VOTS)      D10.3
C          COL 11-20    ENDING COORD VELOCITY RATIO (VC/VOTE)        D10.3
C          COL 21-30    STARTING COORD, LOG MODAL WEIGHT, (BMWTS)    D10.3
C          COL 31-40    ENDING COORD, LOG MODAL WEIGHT, (BMWTE)      D10.3
C
C       THE A CARD IS USED ONLY ONCE, THE REMAINDER OF THE CARDS ARE
C    PRODUCED FOR EACH SYSTEM, SUCCEEDING SYSTEMS ARE PLACED AT THE END
C    OF THE PROCEDING SYSTEM
C       THE UNITS IN THE PROGRAM ARE INCHES-SECONDS-POUNDS, HOWEVER ANY
C    CONSISTENT SET OF UNITS CAN BE USED THE GRAVITATIONAL ACCELERATION
C    IN THE PROGRAM MUST BE CHANGED IF THE UNITS ARE CHANGED
C
C*****************************************************************
```

```
C     MAIN PROGRAM FOR PROGRAM SHOKP.
C
      IMPLICIT REAL*8(A-H,O-Z)
      COMMON X(13),Y(13),Z(13),DO(1),DI(1),POI(1),SPWT(1),E(1),G(1),DUM(
     166),DUM1(66),DUME(66),DUME1(66),SKE(12,12),SME(12,12),SK(66,66),SM
     2(66,66),GV,PI,EIVU(66),EIVR(66,66),DX(66),DY(66),DZ(66),PSEG(1),
     3VSEG(1),FACTRX(66),FACTRY(66),FACTRZ(66),XSPCFR,YSPCFR,ZSPCFR,SMUX
     4(66),SMUY(66),SMUZ(66),EFRAD(1),
     5NPROB,NNT,NET,NN(2,12),NNA(13),NNG(11),NDCN(13),NDOFPE,NDOFPN,IGRP
     6T,IGRP(12),NNPE,IEL(12),NDOFT,JSEG,JSEGM,KOUNT,MOWTTY,IELGLO(6,6)
C
C     READ    THE NUMBER OF PROBLEMS TO BE SOLVED BY PROGRAM SHOKPI
C
      READ(5,80) NPROB
      DO 40 IPRB=1,NPROB
      WRITE(6,85) IPRB
      WRITE(6,81) NPROB
      CALL INPUT
      CALL FORM
      CALL CHOMOD
      CALL JACROT
      CALL SPCTRM
      CALL MODE
      CALL STRESS
   40 CONTINUE
   80 FORMAT(I5)
   81 FORMAT(' ',20X,'NUMBER OF PROBLEMS TO BE SOLVED',3X,I5,//)
   85 FORMAT('1',20X,'PROBLEM NUMBER:',3X,I5,//)
      STOP
      END
```

```
      SUBROUTINE INPUT
      IMPLICIT REAL*8(A-H,O-Z)
      COMMON X(13),Y(13),Z(13),DO(1),DI(1),POI(1),SPWT(1),E(1),G(1),DUM(
     166),DUM1(66),DUME(66),DUME1(66),SKE(12,12),SME(12,12),SK(66,66),SM
     2(66,66),GV,PI,EIVU(66),EIVR(66,66),BX(66),BY(66),BZ(66),ESEG(1),
     3VSEG(1),FACTRX(66),FACTRY(66),FACTRZ(66),XSPCFR,YSPCFR,ZSPCFR,SMUX
     4(66),SMUY(66),SMUZ(66),EFRAD(1),
     5NPROB,NNT,NET,NN(2,12),NNA(13),NNG(11),NBCN(13),NDOFPE,NDOFPN,IGRP
     6T,IGRP(12),NNPE,IEL(12),NDOFT,JSEG,JSEGM,KOUNT,MOWTTY,IELGLO(6,6)
C
C     THIS SUBROUTINE READS THE SYSTEM DATA NECESSARY TO SOLVE THE
C     EIGENVALUE PROBLEM
C
C
C     READ BASIC SYSTEM PARAMETERS AND ECHO CHECK
C
      READ(5,180) NET,NNT,NDOFPN,IGRPT,NDOFT
      NNPE=2
      NDOFPE=NNPE*NDOFPN
      WRITE(6,190) NET,NNT,NDOFPN,NDOFPE,IGRPT,NDOFT
C
C     SET THE PROGRAM CONSTANTS
C
      PI=3.14159265358979 3D0
      GV=386.0D0
C
C     READ GLOBAL COORDINATES OF NODES AND ECHO CHECK
C
      WRITE(6,191)
      DO 120 I=1,NNT
      READ(5,181) X(I),Y(I),Z(I),NBCN(I)
  120 WRITE(6,192)I,X(I),Y(I),Z(I),NBCN(I)
C
C     READ GLOBAL NODE AND ELEMENT DATA AND ECHO CHECK
C
      WRITE(6,193)
      DO 140 K=1,NET
      READ(5,182) IEL(K),NN(1,K),NN(2,K),IGRP(K)
  140 WRITE(6,194)IEL(K),NN(1,K),NN(2,K),IGRP(K)
C
C     READ MATERIAL AND SIZE GROUP DATA AND ECHO CHECK
C
      WRITE(6,195)
      DO 160 J=1,IGRPT
      READ(5,183) DO(J),DI(J),POI(J),SPWT(J),E(J)
      READ(5,197) EFRAD(J)
```

```
      G(J)=E(J)/(2.D0*(1.D0+POI(J)))
  160 WRITE(6,196) DO(J),DI(J),POI(J),SPWT(J),E(J),G(J)
      WRITE(6,198)
      WRITE(6,199) (J,EFRAD(J),J=1,IGRPT)
C
C     FORM THE ASSEMBLED AND GLOBAL NODE ADDRESS MATRICES
C
      J1=1
      DO 170 J=1,NNT
      IF(NBCN(J)) 170,169,168
  168 NNA(J)=0
      GO TO 170
  169 NNA(J)=J1
      NNG(J1)=J
      J1=J1+1
  170 CONTINUE
  180 FORMAT(5I5)
  181 FORMAT(3D9.1,I5)
  182 FORMAT(4I5)
  183 FORMAT(5D10.3)
  190 FORMAT(' ',10X,'TOTAL',5X,'TOTAL',8X,'DEG OF FREEDOM',2X,'DEG OF F
     1REEDOM',2X,'TOTAL',4X,'SYSTEM TOTAL',/,11X,'ELEMENTS',2X,'NODES',
     28X,'PER NODE',8X,'PER ELEMENT',5X,'GROUPS',3X,'DEG OF FREEDOM',
     3//(10X,I5,4X,I5,12X,I5,10X,I5,7X,I5,7X,I5,/))
  191 FORMAT(' ',//,10X,'NODE',7X,'X COORD',5X,'Y COORD',5X,'Z COORD',
     15X,'NODAL BOUNDARY',/,21X,'INCHES',6X,'INCHES',6X,'INCHES',6X,
     2'CONDITIONS',//)
  192 FORMAT(' ',6X,I5,3X,3F12.2,4X,I5)
  193 FORMAT(' ',//,10X,'ELEMENT',4X,'LEFT',6X,'RIGHT',4X,'GROUP',/,10X,
     1'NUMBER',5X,'NODE',6X,'NODE',5X,'NUMBER',//)
  194 FORMAT(' ',10X,I5,3X,I5,6X,I5,4X,I5)
  195 FORMAT(' ',//,10X,'OUTSIDE',7X,'INSIDE',8X,'POISSONS',2X,'SPECIFIC
     1',6X,'YOUNGS',8X,'SHEAR',/,10X,'DIAMETER',6X,'DIAMETER',6X,'RATIO'
     2,5X,'WEIGHT',3X,'MODULUS',7X,'MODULUS',/,10X,'IN.',11X,'IN.',21X,
     3'LB/CU.IN.',5X,'PSI',11X,'PSI',//)
  196 FORMAT(' ',8X,F7.3,7X,F7.3,7X,F7.3,3X,F7.3,7X,1PD10.3,4X,1PD10.3)
  197 FORMAT(D7.2)
  198 FORMAT(' ',//,10X,'PIPE',5X,'RADIUS OF GYRATION',/,10X,'GROUP'4X,'
     1INCHES',//)
  199 FORMAT(' ',10X,I4,8X,F5.2)
      RETURN
      END
```

```
      SUBROUTINE FORM
      IMPLICIT REAL*8(A-H,O-Z)
      COMMON X(13),Y(13),Z(13),DO(1),DI(1),POI(1),SPWT(1),E(1),G(1),DUM(
     166),DUM1(66),DUME(66),DUME1(66),SKE(12,12),SME(12,12),SK(66,66),SM
     2(66,66),GV,PI,EIVU(66),EIVR(66,66),BX(66),BY(66),BZ(66),FSEG(1),
     3VSEG(1),FACTRX(66),FACTRY(66),FACTRZ(66),XSPCFR,YSPCFR,ZSPCFR,SMUX
     4(66),SMUY(66),SMUZ(66),EFRAD(1),
     5NPROB,NNT,NET,NN(2,12),NNA(13),NNG(11),NBCN(13),NDOFPE,NDOFPN,IGRP
     6T,IGRP(12),NNPE,IEL(12),NDOFT,JSEG,JSEGM,KOUNT,MOWTTY,IELGLO(6,6)
C
C     THIS SUBROUTINE COMPUTES THE ELEMENT STIFFNESS AND MASS MATRICES
C     AND ASSEMBLES THEM INTO THE MASTER STIFFNESS AND MASS MATRICES
C
C     ZERO THE SYSTEM STIFFNESS AND MASS MATRICES
C
      DO 202 I=1,NDOFT
      DO 202 J=1,NDOFT
      SK(I,J)=0.D0
  202 SM(I,J)=0.D0
      DO 249 I=1,NDOFT
      SMUX(I)=0.0D0
      SMUY(I)=0.0D0
  249 SMUZ(I)=0.0D0
C
C     SCAN THE ELEMENTS AND COMPUTE AND ASSEMBLE THE ELEMENT MATRICES
C     AND APPLY THE COORDINATE AXES  INTERCHANGE  TO ALIGN WITH THE
C     GLOBAL AXES,  APPLY THE BOUNDARY CONDITIONS, AND ASSEMBLE THE
C     SYSTEM STIFFNESS AND MASS MATRICES
C
      DO 450 L=1,NET
C
C     ZERO THE ELEMENT STIFFNESS AND MASS MATRICES
C
      DO 205 K=1,NDOFPE
      DO 205 M=1,NDOFPE
      SKE(K,M)=0.D0
  205 SME(K,M)=0.D0
C
C     COMPUTE THE ELEMENT PROPERTIES
C
      A=(PI*(DO(IGRP(L))**2-DI(IGRP(L))**2))/4.0D0
      ANERT=(PI*(DO(IGRP(L))**4-DI(IGRP(L))**4))/64.0D0
      AJNERT=2.0D0*ANERT
      AJMNRT=(SPWT(IGRP(L))*A/GV)*(EFRAD(IGRP(L))**2)
      DX=X(NN(2,L))-X(NN(1,L))
      DY=Y(NN(2,L))-Y(NN(1,L))
```

```
      DZ=Z(MN(2,L))-Z(MN(1,L))
      AL=DSQRT(DX**2+DY**2+DZ**2)
C
C     CONSTRUCT THE ELEMENT STIFFNESS AND MASS MATRICES
C
      SKE(1,1)=(E(IGRP(L))*A)/AL
      SKE(2,2)=12.0D0*E(IGRP(L))*ANERT/(AL**3)
      SKE(3,3)=SKE(2,2)
      SKE(4,4)=(G(IGRP(L))*AJNERT)/AL
      SKE(3,5)=-(6.0D0*E(IGRP(L))*ANERT)/(AL**2)
      SKE(5,5)=(4.0D0*E(IGRP(L))*ANERT)/AL
      SKE(2,6)=-SKE(3,5)
      SKE(6,6)=SKE(5,5)
      SKE(1,7)=-SKE(1,1)
      SKE(7,7)=SKE(1,1)
      SKE(2,8)=-SKE(2,2)
      SKE(6,8)=SKE(3,5)
      SKE(8,8)=SKE(2,2)
      SKE(3,9)=-SKE(2,2)
      SKE(5,9)=-SKE(3,5)
      SKE(9,9)=SKE(2,2)
      SKE(4,10)=-SKE(4,4)
      SKE(10,10)=SKE(4,4)
      SKE(3,11)-SKE(3,5)
      SKE(5,11)=(2.0D0*E(IGRP(L))*ANERT)/AL
      SKE(9,11)=-SKE(3,5)
      SKE(11,11)=SKE(5,5)
      SKE(2,12)=-SKE(3,5)
      SKE(6,12)=SKE(5,11)
      SKE(8,12)=SKE(3,5)
      SKE(12,12)=SKE(11,11)
      DO 206 I=2,NDOFPE
      IM=I-1
      DO 206 J=1,IM
  206 SKE(I,J)=SKE(J,I)
C
C
      SME(1,1)=(2.0D0*SPWT(IGRP(L))*A*AL)/(6.0D0*GV)
      SME(7,1)=(SPWT(IGRP(L))*A*AL)/(6.0D0*GV)
      SME(2,2)=(156.0D0*SPWT(IGRP(L))*A*AL)/(420.0D0*GV)
      SME(6,2)=(22.0D0*SPWT(IGRP(L))*A*(AL**2))/(420.0D0*GV)
      SME(8,2)=(54.0D0*SPWT(IGRP(L))*A*AL)/(420.0D0*GV)
      SME(12,2)=-(13.0D0*SPWT(IGRP(L))*A*(AL**2))/(420.0D0*GV)
      SME(3,3)=SME(2,2)
      SME(5,3)=-SME(6,2)
      SME(9,3)=SME(8,2)
      SME(11,3)=-SME(12,2)
      SME(4,4)=(2.0D0*AJMNRT*AL)/6.0D0
```

```
      SME(10,4)=(AJMNRT*AL)/6.0D0
      SME(5,5)=(4.0D0*SPWT(IGRP(L))*A*(AL**3))/(420.0D0*GV)
      SME(9,5)=SME(12,2)
      SME(11,5)=-(3.0D0*SPWT(IGRP(L))*A*(AL**3))/(420.0D0*GV)
      SME(6,6)=SME(5,5)
      SME(8,6)=-SME(12,2)
      SME(12,6)=SME(11,5)
      SME(7,7)=SME(1,1)
      SME(8,8)=SME(2,2)
      SME(12,8)=-SME(6,2)
      SME(9,9)=SME(2,2)
      SME(11,9)=SME(6,2)
      SME(10,10)=SME(4,4)
      SME(11,11)=SME(5,5)
      SME(12,12)=SME(5,5)
      DO 207 I=2,NDOFPE
      IM=I-1
      DO 207 J=1,IM
  207 SME(J,I)=SME(I,J)
C
C     DETERMINE THE GLOBAL DIRECTION OF THE ELEMENT
C
      TDX=(DX/AL)**2
      TDY=(DY/AL)**2
      IF(TDX.LT.1.0D-3) GO TO 210
      IF(DX.LT.0.0D0) GO TO 208
C
C     LOCAL AXES  ALIGNED +X GLOBAL
C
      GO TO 350
C
C     LOCAL AXES  ALIGNED -X GLOBAL
C
  208 LO=2
      L1=3
      GO TO 219
  210 IF(TDY.LT.1.0D-3) GO TO 215
      IF(DY.LT.0.0D0) GO TO 212
C
C     LOCAL AXES  ALIGNED +Y GLOBAL
C
      LO=2
      L1=1
      L2=3
      GO TO 239
C
C     LOCAL AXES  ALIGNED -Y GLOBAL
C
```

```
  212 LO=1
      L1=2
      GO TO 219
  215 IF(DZ.LT.0.0D0) GO TO 216
C
C     LOCAL AXES  ALIGNED WITH +Z GLOBAL
C
      LO=1
      L1=2
      L2=3
      GO TO 239
C
C     LOCAL AXES  ALIGNED WITH -Z GLOBAL
C
  216 LO=1
      L1=3
      GO TO 219
C
C     ASSEMBLE THE SYSTEM STIFFNESS AND MASS MATRICES
C
  219 DO 225 K=1,4
      K3M=3*(K-1)
      DO 220 J=1,NDOFPE
      DUM(J)=SKE(J,LO+K3M)
      DUME(J)=SME(J,LO+K3M)
      SKE(J,LO+K3M)=SKE(J,L1+K3M)
      SME(J,LO+K3M)=SME(J,L1+K3M)
      SKE(J,L1+K3M)=DUM(J)
  220 SME(J,L1+K3M)=DUME(J)
      DO 221 J=1,NDOFPE
      DUM1(J)=SKE(LO+K3M,J)
      DUME1(J)=SME(LO+K3M,J)
      SKE(LO+K3M,J)=SKE(L1+K3M,J)
      SME(LO+K3M,J)=SME(L1+K3M,J)
      SKE(L1+K3M,J)=DUM1(J)
  221 SME(L1+K3M,J)=DUME1(J)
  225 CONTINUE
      GO TO 350
  239 DO 240 K=1,4
      K3M=3*(K-1)
      DO 235 J=1,NDOFPE
      DUM(J)=SKE(J,LO+K3M)
      DUME(J)=SME(J,LO+K3M)
      SKE(J,LO+K3M)=SKE(J,L1+K3M)
      SME(J,LO+K3M)=SME(J,L1+K3M)
      SKE(J,L1+K3M)=SKE(J,L2+K3M)
      SME(J,L1+K3M)=SME(J,L2+K3M)
      SKE(J,L2+K3M)=DUM(J)
```

```
235 SME(J,L2+K3M)=DUME(J)
    DO 236 J=1,NDOFPE
    DUM1(J)=SKE(L0+K3M,J)
    DUME1(J)=SME(L0+K3M,J)
    SKE(L0+K3M,J)=SKE(L1+K3M,J)
    SME(L0+K3M,J)=SME(L1+K3M,J)
    SKE(L1+K3M,J)=SKE(L2+K3M,J)
    SME(L1+K3M,J)=SME(L2+K3M,J)
    SKE(L2+K3M,J)=DUM1(J)
236 SME(L2+K3M,J)=DUME1(J)
240 CONTINUE
350 IF(NNA(NN(1,L)).EQ.0) GO TO 380
    IF(NNA(NN(2,L)).EQ.0) GO TO 390
    DO 370 I=1,NNPE
    INN=NDOFPN*(I-1)
    DO 365 J=1,NDOFPN
    INP=NDOFPN*(NNA(NN(I,L))-1)
    SMUX(INP+J)=SMUX(INP+J)+(SME(INN+J,1)+SME(INN+J,7))
    SMUY(INP+J)=SMUY(INP+J)+(SME(INN+J,2)+SME(INN+J,8))
365 SMUZ(INP+J)=SMUZ(INP+J)+(SME(INN+J,3)+SME(INN+J,9))
370 CONTINUE
    GO TO 395
380 INP=NDOFPN*(NNA(NN(2,L))-1)
    DO 385 I=1,NDOFPN
    NPI=NDOFPN+I
    SMUX(INP+I)=SMUX(INP+I)+(SME(NPI,1)+SME(NPI,7))
    SMUY(INP+I)=SMUY(INP+I)+(SME(NPI,2)+SME(NPI,8))
385 SMUZ(INP+I)=SMUZ(INP+I)+(SME(NPI,3)+SME(NPI,9))
    GO TO 395
390 INP=NDOFPN*(NNA(NN(1,L))-1)
    DO 394 I=1,NDOFPN
    SMUX(INP+I)=SMUX(INP+I)+(SME(I,1)+SME(I,7))
    SMUY(INP+I)=SMUY(INP+I)+(SME(I,2)+SME(I,8))
394 SMUZ(INP+I)=SMUZ(INP+I)+(SME(I,3)+SME(I,9))
395 CONTINUE
    IF(NNA(NN(1,L)).EQ.0) GO TO 400
    IF(NNA(NN(2,L)).EQ.0) GO TO 405
    DO 420 I=1,NNPE
    III=NDOFPN*(NNA(NN(I,L))-1)
    DO 420 J=1,NNPE
    JJJ=NDOFPN*(NNA(NN(J,L))-1)
    DO 410 K1=1,NDOFPN
    KI=NDOFPN*(I-1)+K1
    DO 410 K2=1,NDOFPN
    KJ=NDOFPN*(J-1)+K2
    SK(III+K1,JJJ+K2)=SK(III+K1,JJJ+K2)+SKE(KI,KJ)
410 SM(III+K1,JJJ+K2)=SM(III+K1,JJJ+K2)+SME(KI,KJ)
420 CONTINUE
```

```
      J TO 450
  400 KZ=NDOFPN
      II=NDOFPN*(NNA(NN(2,L))-1)
      GO TO 408
  405 KZ=0
      II=NDOFPN*(NNA(NN(1,L))-1)
  408 DO 409 I=1,NDOFPN
      DO 409 J=1,NDOFPN
      SK(II+I,II+J)=SK(II+I,II+J)+SKE(I+KZ,J+KZ)
  409 SM(II+I,II+J)=SM(II+I,II+J)+SME(I+KZ,J+KZ)
  450 CONTINUE
C
C     IF THE PIPING SYSTEM INCLUDES PIPE HANGERS, INSERT THE SEGMENT FOR
C     ADDING THE HANGER STIFFNESS TO THE SYSTEM STIFFNESS MATRIX
C
C     READ THE NUMBER OF HANGERS IN THE SYSTEM
C
      READ(5,440) NHANG
      WRITE(6,441) NHANG
C
C     READ THE GLOBAL NODE AT THE HANGER, HANGER GLOBAL DIRECTION INDEX,
C     AND AXIAL STIFFNESS.
C     ADD HANGER STIFFNESS TO THE SYSTEM MATRIX
C
      WRITE(6,444)
      DO 445 I=1,NHANG
      READ(5,442) IGNN,IADOF,HSTIF
      LAZ=NDOFPN*(NNA(IGNN)-1)+IADOF
      WRITE(6,443) IGNN,IADOF,HSTIF
  445 SK(LAZ,LAZ)=SK(LAZ,LAZ)+HSTIF
  440 FORMAT(I5)
  441 FORMAT(' ',//,10X,'NUMBER OF HANGERS:',I5,//)
  442 FORMAT(2I5,D11.6)
  443 FORMAT(' ',11X,I5,7X,I5,7X,1PD13.6)
  444 FORMAT(' ',//,10X,'GLOBAL DOF',5X,'IADOF',5X,'HANGER STIFFNESS',/,
     135X,'LB/IN.',//)
      RETURN
      END
```

```
      SUBROUTINE CHOMOD
      IMPLICIT REAL*8(A-H,O-Z)
      COMMON X(13),Y(13),Z(13),DO(1),DI(1),POI(1),SPWT(1),E(1),G(1),DUM(
     166),DUM1(66),DUME(66),DUME1(66),SKE(12,12),SME(12,12),SK(66,66),SM
     2(66,66),GV,PI,EIVU(66),EIVR(66,66),BX(66),BY(66),BZ(66),FSEG(1),
     3VSEG(1),FACTRX(66),FACTRY(66),FACTRZ(66),XSPCFR,YSPCFR,ZSPCFR,SMUX
     4(66),SMUY(66),SMUZ(66),EFRAD(1),
     5NPROB,NNT,NET,NN(2,12),NNA(13),NNG(11),NBCN(13),NDOFPE,NDOFPN,IGRP
     6T,IGRP(12),NNPE,IEL(12),NDOFT,JSEG,JSEGM,KOUNT,MOWTTY,IELGLO(6,6)
C
C     THIS SUBROUTINE COMPUTES THE NECESSARY DATA TO CONVERT THE SYSTEM
C     INTO A SIMPLE EIGENVALUE ROUTINE
C
C     REPLACE LOWER TRIANGLE OF MASS MATRIX BY CHOLESKY LOWER TRIANGLE
C
  499 NDOFTM=NDOFT-1
      DO 550 IC=1,NDOFTM
      ICP=IC+1
      SM(IC,IC)=DSQRT(SM(IC,IC))
      DO 500 JC=ICP,NDOFT
  500 SM(JC,IC)=SM(IC,JC)/SM(IC,IC)
      DO 550 KC=ICP,NDOFT
      DO 550 LC=KC,NDOFT
  550 SM(KC,LC)=SM(KC,LC)-SM(KC,IC)*SM(LC,IC)
      SM(NDOFT,NDOFT)=DSQRT(SM(NDOFT,NDOFT))
C
C     REPLACE LOWER TRIANGLE BY ITS INVERSE
C
      DO 600 I=1,NDOFT
  600 SM(I,I)=1.D0/SM(I,I)
      DO 700 J=2,NDOFT
      DO 700 K=1,J
      JKM=J-K-1
      SUM=0.D0
      IF(JKM.EQ.-1) GO TO 700
      IF(JKM.EQ.0) GO TO 680
      DO 640 L=1,JKM
      LK=L+K
  640 SUM=SUM+SM(J,LK)*SM(LK,K)
  680 SM(J,K)=-(SM(J,K)*SM(K,K)+SUM)*SM(J,J)
  700 CONTINUE
C
C     REPLACE STIFFNESS MATRIX BY MODIFIED STIFFNESS MATRIX
C
      DO 703 I=1,NDOFT
      DO 702 K=1,NDOFT
```

```
      DUM(K)=0.D0
      DO 702 J=1,K
  702 DUM(K)=DUM(K)+SK(I,J)*SM(K,J)
      DO 703 ID=1,NDOFT
  703 SK(I,ID)=DUM(ID)
      DO 705 I=1,NDOFT
      DO 704 K=1,NDOFT
      DUM(K)=0.D0
      DO 704 J=1,K
  704 DUM(K)=DUM(K)+SM(K,J)*SK(J,I)
      DO 705 ID=1,NDOFT
  705 SK(ID,I)=DUM(ID)
 1709 RETURN
      END
```

```
      SUBROUTINE JACROT
      IMPLICIT REAL*8(A-H,O-Z)
      COMMON X(13),Y(13),Z(13),DO(1),DI(1),POI(1),SPWT(1),E(1),G(1),DUM(
     166),DUM1(66),DUME(66),DUME1(66),SKE(12,12),SME(12,12),SK(66,66),SM
     2(66,66),GV,PI,EIVU(66),EIVR(66,66),BX(66),BY(66),BZ(66),FSEG(1),
     3VSEG(1),FACTRX(66),FACTRY(66),FACTRZ(66),XSPCFR,YSPCFR,ZSPCFR,SMUX
     4(66),SMUY(66),SMUZ(66),FFRAD(1),
     5NPROB,NNT,NET,NN(2,12),NNA(13),NNG(11),NBCN(13),NDOFPE,NDOFPN,IGRP
     6T,IGRP(12),NNPE,IEL(12),NDOFT,JSEG,JSEGM,KOUNT,MOWTTY,IELGLO(6,6)
C
C     THIS SUBROUTINE USES THE JACOBI V.T. METHOD TO SOLVE THE
C     EIGENVALUE PROBLEM
C
C
C     SET THE MODE SHAPE MATRIX TO ZERO
C
      DO 710 J=1,NDOFT
      DO 709 I=1,NDOFT
  709 EIVR(I,J)=0.D0
  710 EIVR(J,J)=1.D0
      ATOP=0.D0
C
C     TEST THE NEW STIFFNESS MATRIX FOR SYMMETRY
C
      DO 720 J=1,NDOFT
      DO 719 I=1,J
      IF(SK(I,J)-SK(J,I)) 712,715,712
  712 SK(I,J)=0.5*(SK(I,J)+SK(J,I))
      SK(J,I)=SK(I,J)
  715 CONTINUE
      ATEMP2=DABS(SK(I,J))
      IF(ATOP-ATEMP2) 716,719,719
  716 ATOP=ATEMP2
  719 CONTINUE
  720 EIVU(J)=SK(J,J)
      AVGF=DFLOAT(NDOFT*(NDOFT-1))*0.55
      D=0.D0
      DO 730 JJ=2,NDOFT
      DO 730 II=2,JJ
      S=SK(II-1,JJ)/ATOP
  730 D=S*S+D
      DSTOP=(1.D-06)*D
      THRSH=DSQRT(D/AVGF)*ATOP
  732 IFLAG=0
      DO 800 JCOL=2,NDOFT
      JCOL1=JCOL-1
```

```
      DO 800 IROW=1,JCOL1
      SKPIJ=SK(IROW,JCOL)
      IF(DABS(SKPIJ)-THRSH) 800,800,734
  734 SKPII=SK(IROW,IROW)
      SKPJJ=SK(JCOL,JCOL)
      S=SKPJJ-SKPII
      IF(DABS(SKPIJ)-1.D-09*DABS(S)) 800,800,736
  736 IFLAG=1
      IF(1.D-10*DABS(SKPIJ)-DABS(S)) 740,738,738
  738 S=0.7071067811865475
      C=S
      GO TO 742
  740 T=SKPIJ/S
      S=0.25/DSQRT(0.25+T*T)
      C=DSQRT(0.5+S)
      S=2.0*T*S/C
  742 DO 750 I=1,IROW
      T=SK(I,IROW)
      U=SK(I,JCOL)
      SK(I,IROW)=C*T-S*U
  750 SK(I,JCOL)=S*T+C*U
      I2=IROW+2
      IF(I2-JCOL) 752,752,754
  752 CONTINUE
      DO 753 I=I2,JCOL
      T=SK(I-1,JCOL)
      U=SK(IROW,I-1)
      SK(I-1,JCOL)=S*U+C*T
  753 SK(IROW,I-1)=C*U-S*T
  754 SK(JCOL,JCOL)=S*SKPIJ+C*SKPJJ
      SK(IROW,IROW)=C*SK(IROW,IROW)-S*(C*SKPIJ-S*SKPJJ)
      DO 760 J=JCOL,NDOFT
      T=SK(IROW,J)
      U=SK(JCOL,J)
      SK(IROW,J)=C*T-S*U
  760 SK(JCOL,J)=S*T+C*U
      DO 762 I=1,NDOFT
      T=EIVR(I,IROW)
      EIVR(I,IROW)=C*T-EIVR(I,JCOL)*S
  762 EIVR(I,JCOL)=S*T+EIVR(I,JCOL)*C
      S=SKPIJ/ATOP
      D=D-S*S
      IF(D-DSTOP) 764,766,766
  764 D=0.D0
      DO 765 JJ=2,NDOFT
      DO 765 II=2,JJ
      S=SK(II-1,JJ)/ATOP
  765 D=S*S+D
```

```
      DSTOP=(1.D-06)*D
  766 THRSH=DSQRT(D/AVGF)*ATOP
  800 CONTINUE
      IF(IFLAG) 732,810,732
  810 T=SK(1,1)
      SK(1,1)=EIVU(1)
      EIVU(1)=T
      DO 820 J=2,NDOFT
      T=SK(J,J)
      SK(J,J)=EIVU(J)
      EIVU(J)=T
      DO 820 I=2,J
  820 SK(I-1,J)=SK(J,I-1)
C
C     TRANSFORMING MODIFIED COORDINATES TO THE ORIGINAL SET
C
      DO 870 I=1,NDOFT
      DO 860 K=1,NDOFT
      DUM(K)=0.D0
      DO 860 J=I,NDOFT
  860 DUM(K)=DUM(K)+SM(J,I)*EIVR(J,K)
      DO 870 IA=1,NDOFT
  870 EIVR(I,IA)=DUM(IA)
C
C     SORTING EIGENVECTORS AND EIGENVALUES
C
      DO 900 I=1,NDOFT
      DO 900 J=I,NDOFT
      IF(EIVU(I).LE.EIVU(J)) GO TO 900
      AMAP=EIVU(I)
      EIVU(I)=EIVU(J)
      EIVU(J)=AMAP
      DO 885 K=1,NDOFT
      AMAP=EIVR(K,I)
      EIVR(K,I)=EIVR(K,J)
  885 EIVR(K,J)=AMAP
  900 CONTINUE
      WRITE(6,1015)
      NDIV=NDOFT/NDOFPN
      DO 1025 I=1,NDIV
      NMP=NDOFPN*(I-1)+1
      IT3=NDOFPN*I
      WRITE(6,1040)(EIVU(N),N=NMP,IT3)
      DO 1020 N=1,NDIV
      IOP=NDOFPN*(N-1)+1
      IDP=NDOFPN*N
      DO 1019 L=IOP,IDP
 1019 WRITE(6,1045)(EIVR(L,K),K=NMP,IT3)
```

```
      WRITE(6,1043)
 1020 CONTINUE
      WRITE(6,1044)
 1025 CONTINUE
 1015 FORMAT('1',//,30X,'EIGENVALUES AND EIGENVECTORS',//)
 1040 FORMAT(' ',10X,6(1X,1PD13.5),//)
 1044 FORMAT(' ',//)
 1043 FORMAT(' ',/)
 1045 FORMAT(' ',10X,6(1X,1PD13.5))
      RETURN
      END
```

```
      SUBROUTINE SPCTRM
      IMPLICIT REAL*8(A-H,O-Z)
      COMMON X(13),Y(13),Z(13),DO(1),DI(1),POI(1),SPWT(1),E(1),G(1),DUM(
     166),DUM1(66),DUME(66),DUME1(66),SKE(12,12),SME(12,12),SK(66,66),SM
     2(66,66),GV,PI,EIVU(66),EIVR(66,66),BX(66),BY(66),BZ(66),FSEG(1),
     3VSEG(1),FACTRX(66),FACTRY(66),FACTRZ(66),XSPCFR,YSPCFR,ZSPCFR,SMUX
     4(66),SMUY(66),SMUZ(66),EFRAD(1),
     5NPROB,NNT,NET,NN(2,12),NNA(13),NNG(11),NBCN(13),NDOFPE,NDOFPN,IGRP
     6T,IGRP(12),NNPE,IEL(12),NDOFT,JSEG,JSEGM,KOUNT,MOWTTY,IELGLO(6,6)
C
C     THIS SUBROUTINE DETERMINES THE SHOCK SPECTRUM AND NUMBER OF MODES
C     TO BE USED IN THE STRESS ANALYSIS
C
      READ(5,991) ISPCTY,IFRQTY,JSEG
      WRITE(6,996) ISPCTY,IFRQTY
C
C     CHANGE RADIAN FREQUENCY TO HERTZ
C
      DO 905 J=1,NDOFT
      EIVU(J)=DSQRT(EIVU(J))
  905 EIVU(J)=EIVU(J)/(2.0D0*PI)
C
C     DETERMINE THE NUMBER OF MODES TO BE USED IN THE ANALYSIS
C
      KOUNT=0
      IF(IFRQTY) 910,920,930
  910 KOUNT=NDOFT
      GO TO 939
C
C     THE CUTOFF FREQUENCY IS 10X THE FUNDAMENTAL FREQUENCY
C
  920 EIVUCO=10.0D0*EIVU(1)
      DO 925 I=1,NDOFT
      IF(EIVU(I).LE.EIVUCO) KOUNT=KOUNT+1
  925 CONTINUE
      GO TO 939
C
C     CUTOFF FREQUENCY IS PREDETERMINED AND READ
C
  930 READ(5,992) EIVUCO
      WRITE(6,997) EIVUCO
      DO 935 I=1,NDOFT
      IF(EIVU(I).LE.EIVUCO) KOUNT=KOUNT+1
  935 CONTINUE
C
C     DETERMINE THE TYPE OF SHOCK SPECTRUM TO BE USED
```

```
C
  939 JSEGM=JSEG-1
      IF(ISPCTY) 940,960,970
  940 GO TO 980
C
C     SHOCK SPECTRUM REPRESENTED BY STRAIGHT LINES
C
  960 WRITE(6,982) JSEGM
      READ(5,993)(FSEG(J),VSEG(J),J=1,JSEG)
      WRITE(6,998)(J,FSEG(J),VSEG(J),J=1,JSEG)
      DO 966 I=1,KOUNT
      DO 965 J=1,JSEGM
      IF((FSEG(J).LE.EIVU(I)).AND.(EIVU(I).LE.FSEG(J+1))) GO TO 963
      GO TO 965
  963 DUM(J)=((VSEG(J+1)-VSEG(J))/(FSEG(J+1)-FSEG(J)))*(EIVU(I)-FSEG(J))
     1+VSEG(J)
  965 CONTINUE
  966 CONTINUE
      GO TO 980
C
C     SHOCK SPECTRUM CONSTANT VELOCITY TO F, THEN CONSTANT ACCELERATION
C
  970 READ(5,994) FSEG(1),VSEG(1)
      WRITE(6,999) FSEG(1),VSEG(1)
      DO 975 J=1,KOUNT
      IF(EIVU(J).LE.FSEG(1)) GO TO 977
      DUM(J)=(VSEG(1)*FSEG(1))/EIVU(J)
      GO TO 975
  977 DUM(J)=VSEG(1)
  975 CONTINUE
  980 READ(5,995) XSPCFR,YSPCFR,ZSPCFR
      WRITE(6,990) XSPCFR,YSPCFR,ZSPCFR
      WRITE(6,991)(J,DUM(J),J=1,KOUNT)
  991 FORMAT(3I5)
  996 FORMAT('1',//,10X,'SPECTRUM',10X,'FREQUENCY',/,10X,'TYPE',14X,'TYP
     1E',//(10X,I4,14X,I5))
  982 FORMAT(' ',//,10X,'NUMBER OF STRAIGHT LINE SEGMENTS',I5)
  992 FORMAT(D11.4)
  997 FORMAT(' ',//,10X,'CUTOFF FREQUENCY',/,10X,'HERTZ',/,12X,1PD10.3)
  998 FORMAT(' ',//,20X,'SEGMENT',5X,'STARTING FREQUENCY',5X,'STARTING
     1VELOCITY',/,32X,'HERTZ',18X,'INCHES/SEC.',//(22X,I4,10X,F8.2,15X,
     2F8.2))
  993 FORMAT(2D9.2)
  994 FORMAT(2D10.3)
  999 FORMAT(' ',//,10X,'BREAK FREQUENCY',5X,'CONSTANT VELOCITY',/,10X,
     1'HERTZ',15X,'INCHES/SEC.',//(12X,F8.2,13X,F8.2))
  995 FORMAT(3D10.3)
  990 FORMAT(' ',//,10X,'SHOCK INPUT FACTORS',/,10X,'X',10X,'Y',10X,'Z',
```

```
     1//(7X,F8.3,3X,F8.3,3X,F8.3))
981  FORMAT(' ',//,10X,'MODE',10X,'SPECTRUM VELOCITY',/,24X,'INCHES/SEC
     1.',//(9X,I4,15X,F8.2))
      RETURN
      END
```

```
      SUBROUTINE MODE
      IMPLICIT REAL*8(A-H,O-Z)
      COMMON X(13),Y(13),Z(13),DO(1),DI(1),POI(1),SPWT(1),E(1),G(1),DUM(
     166),DUM1(66),DUME(66),DUME1(66),SKE(12,12),SME(12,12),SK(66,66),SM
     2(66,66),GV,PI,EIVU(66),EIVR(66,66),BX(66),BY(66),BZ(66),FSEG(1),
     3VSEG(1),FACTRX(66),FACTRY(66),FACTRZ(66),XSPCFR,YSPCFR,ZSPCFR,SMUX
     4(66),SMUY(66),SMUZ(66),EFRAD(1),
     5NPRCB,NNT,NET,NN(2,12),NNA(13),NNG(11),NBCN(13),NDOFPE,NDOFPN,IGRP
     6T,IGRP(12),NNPE,IEL(12),NDOFT,JSEG,JSEGM,KOUNT,MOWTTY,IELGLO(6,6)
C
C     THIS SUBROUTINE COMPUTES THE MODE PARTICIPATION FACTORS AND
C     CORRECTS THE SPECTRUM VELOCITY FOR MODAL MASS
C
      DO 2100 I=1,KOUNT
      BX(I)=0.0D0
      BY(I)=0.0D0
      BZ(I)=0.0D0
      DO 2100 J=1,NDOFT
      BX(I)=BX(I)+EIVR(J,I)*SMUX(J)
      BY(I)=BY(I)+EIVR(J,I)*SMUY(J)
 2100 BZ(I)=BZ(I)+EIVR(J,I)*SMUZ(J)
C
C     CALCULATE CORRECTIONS TO SPECTRUM VELOCITY
C
      READ(5,2111) MOWTTY
      WRITE(6,2112) MOWTTY
      IF(MOWTTY) 2220,2240,2260
 2220 GO TO 2280
C
C     NO CORRECTION DESIRED
C
 2240 GO TO 2280
C
C     CORRECTION PREDICTED BY STRAIGHT LINE ON CORRECTED VELOCITY VS
C     LOG MODAL WEIGHT CURVE
C
 2260 READ(5,2113) VOVOTS,VOVOTE,BMWTS,BMWTE
      WRITE(6,2114) VOVOTS,VOVOTE,BMWTS,BMWTE
      SLOPE=(VOVOTE-VOVOTS)/(DLOG10(BMWTE)-DLOG10(BMWTS))
      VCEP=VOVOTS-SLOPE*DLOG10(BMWTS)
      DO 2300 I=1,KOUNT
      DUM1(I)=(SLOPE*DLOG10(((BX(I)**2)*GV))+VCEP)*DUM(I)
      DUME(I)=(SLOPE*DLOG10(((BY(I)**2)*GV))+VCEP)*DUM(I)
 2300 DUME1(I)=(SLOPE*DLOG10(((BZ(I)**2)*GV))+VCEP)*DUM(I)
 2280 CONTINUE
      WRITE(6,2115)(I,BX(I),BY(I),BZ(I),I=1,KOUNT)
```

```
      IF(MOWTTY) 2290,2283,2285
2283  GO TO 2290
2285  WRITE(6,2116)(DUM1(J),DUME(J),DUME1(J),J=1,KOUNT)
2290  CONTINUE
2111  FORMAT(I5)
2112  FORMAT(' ',//,10X,'MODE WEIGHT CORRECTION TYPE',I4)
2113  FORMAT(4D10.3)
2114  FORMAT(' ',//,10X,'START V COORD',1X,'END V COORD',1X,'START MO WT
     1 COORD',1X,'END MO WT COORD',//,12X,1PD10.3,2X,1PD10.3,7X,1PD10.3,
     26X,1PD10.3)
2115  FORMAT('    //,10X,'MODE',10X,'MODE PARTICIPATION FACTORS',/,24X,'X
     1',11X,'Y',12X,'Z',//(9X,I4,6X,1PD10.3,2X,1PD10.3,3X,1PD10.3))
2116  FORMAT(' ',//,10X,'CORRECTED SPECTRUM VELOCITY',/,10X,'INCHES/SEC.
     1',//(3(1X,1PD10.3)))
      RETURN
      END
```

```
      SUBROUTINE STRESS
      IMPLICIT REAL*8(A-H,O-Z)
      COMMON X(13),Y(13),Z(13),DO(1),DI(1),POI(1),SPWT(1),E(1),G(1),DUM(
     166),DUM1(66),DUME(66),DUME1(66),SKE(12,12),SME(12,12),SK(66,66),SM
     2(66,66),GV,P    IVU(66),EIVR(66,66),BX(66),BY(66),BZ(66),FSEG(1),
     3VSEG(1),FACTRX(66),FACTRY(66),FACTRZ(66),XSPCFR,YSPCFR,ZSPCFR,SMUX
     4(66),SMUY(66),SMUZ(66),EFRAD(1),
     5NPROB,NNT,NET,NN(2,12),NNA(13),NNG(11),NBCN(13),NDOFPE,NDOFPN,IGRP
     6T,IGRP(12),NNPE,IEL(12),NDOFT,JSEG,JSEGM,KOUNT,MOWTTY,IELGLO(6,6)
C
C     THIS SUBROUTINE COMPUTES THE OCTAHEDRAL  SHEARING STRESS AT EACH
C     NODE FOR AN ELEMENT FIBER AT THE TOP AND 90 DEGREES TO THE SIDE
C     FOR EACH ELEMENT IN EACH MODE
C
C     DETERMINE THE MAXIMUM DISPLACEMENTS FOR EACH ELEMENT
C
      DO 3255 I=1,NDOFT
      DO 3255 J=1,NDOFT
      SM(I,J)=0.0D0
 3255 SK(I,J)=0.0D0
      IF(MOWTTY) 2600,2700,2780
 2600 GO TO 2800
C
C     NO MODAL MASS CORRECTIONS TO SPECTRUM VELOCITY
C
 2700 DO 2750 I=1,KOUNT
      FACTRX(I)=((BX(I)*DUM(I))/(2.0D0*PI*EIVU(I)))*XSPCFR
      FACTRY(I)=((BY(I)*DUM(I))/(2.0D0*PI*EIVU(I)))*YSPCFR
 2750 FACTRZ(I)=((BZ(I)*DUM(I))/(2.0D0*PI*EIVU(I)))*ZSPCFR
      GO TO 2800
C
C     MODAL MASS CORRECTIONS APPLIED TO SPECTRUM VELOCITY
C
 2780 DO 2790 I=1,KOUNT
      FACTRX(I)=((BX(I)*DUM1(I))/(2.0D0*PI*EIVU(I)))*XSPCFR
      FACTRY(I)=((BY(I)*DUME(I))/(2.0D0*PI*EIVU(I)))*YSPCFR
 2790 FACTRZ(I)=((BZ(I)*DUME1(I))/(2.0D0*PI*EIVU(I)))*ZSPCFR
 2800 CONTINUE
C
C     GENERATE THE ELEMENT AND GLOBAL ADDRESS ARRAY
C
      DO 2850 I=1,3
      DO 2850 J=1,3
      KK=3
      KM=I-1
      IELGLO(J,I)=J+KM
```

```
      IF(IELGLO(J,I).GT.3) IELGLO(J,I)=IELGLO(J,I)-KK
      IELGLO(I,J+KK)=J-KM
      IF(IELGLO(I,J+KK).LT.1) IELGLO(I,J+KK)=IELGLO(I,J+KK)+KK
 2850 CONTINUE
      DO 2880 I=4,6
      DO 2880 J=1,NDOFPN
      IM3=I-3
 2880 IELGLO(I,J)=IELGLO(IM3,J)+3
C
C     SCAN THE NUMBER OF MODES FOR EACH ELEMENT
C
      DO 3600 L=1,NET
C
C     ZERO AND RESET THE LOCAL SKE AND SME MATRIX
C
      DO 2890 I=1,NDOFPE
      DO 2890 J=1,NDOFPE
      SKE(I,J)=0.0D0
 2890 SME(I,J)=0.0D0
      A=(PI*(DO(IGRP(L))**2-DI(IGRP(L))**2))/4.0D0
      ANERT=(PI*(DO(IGRP(L))**4-DI(IGRP(L))**4))/64.0D0
      AJNERT=2.0D0*ANERT
      AJMNRT=(SPWT(IGRP(L))*A/GV)*(EFRAD(IGRP(L))**2)
      DX=X(NN(2,L))-X(NN(1,L))
      DY=Y(NN(2,L))-Y(NN(1,L))
      DZ=Z(NN(2,L))-Z(NN(1,L))
      AL=DSQRT(DX**2+DY**2+DZ**2)
      SKE(1,1)=(E(IGRP(L))*A)/AL
      SKE(2,2)=12.D0*E(IGRP(L))*ANERT/(AL**3)
      SKE(3,3)=SKE(2,2)
      SKE(4,4)=(G(IGRP(L))*AJNERT)/AL
      SKE(3,5)=-(6.D0*E(IGRP(L))*ANERT)/(AL**2)
      SKE(5,5)=(4.D0*E(IGRP(L))*ANERT)/AL
      SKE(2,6)=-SKE(3,5)
      SKE(6,6)=SKE(5,5)
      SKE(1,7)=-SKE(1,1)
      SKE(7,7)=SKE(1,1)
      SKE(2,8)=-SKE(2,2)
      SKE(6,8)=SKE(3,5)
      SKE(8,8)=SKE(2,2)
      SKE(3,9)=-SKE(2,2)
      SKE(5,9)=-SKE(3,5)
      SKE(9,9)=SKE(2,2)
      SKE(4,10)=-SKE(4,4)
      SKE(10,10)=SKE(4,4)
      SKE(3,11)=SKE(3,5)
      SKE(5,11)=(2.D0*E(IGRP(L))*ANERT)/AL
      SKE(9,11)=-SKE(3,5)
```

```
      SKE(11,11)=SKE(5,5)
      SKE(2,12)=-SKE(5,5)
      SKE(5,12)=SKE(5,11)
      SKE(8,12)=SKE(3,5)
      SKE(12,12)=SKE(11,11)
      DO 2895 I=2,NDOFPE
      IM=I-1
      DO 2895 J=1,IM
 2895 SKE(I,J)=SKE(J,I)
C
      SME(1,1)=(2.0D0*SPWT(IGRP(L))*A*AL)/(6.0D0*GV)
      SME(7,1)=(SPWT(IGRP(L))*A*AL)/(6.0D0*GV)
      SME(2,2)=(156.0D0*SPWT(IGRP(L))*A*AL)/(420.0D0*GV)
      SME(6,2)=(22.0D0*SPWT(IGRP(L))*A*(AL**2))/(420.0D0*GV)
      SME(8,2)=(54.0D0*SPWT(IGRP(L))*A*AL)/(420.0D0*GV)
      SME(12,2)=-(13.0D0*SPWT(IGRP(L))*A*(AL**2))/(420.0D0*GV)
      SME(3,3)=SME(2,2)
      SME(5,3)=-SME(6,2)
      SME(9,3)=SME(8,2)
      SME(11,3)=-SME(12,2)
      SME(4,4)=(2.0D0*AJMNRT*AL)/6.0D0
      SME(10,4)=(AJMNRT*AL)/6.0D0
      SME(5,5)=(4.0D0*SPWT(IGRP(L))*A*(AL**3))/(420.0D0*GV)
      SME(9,5)=SME(12,2)
      SME(11,5)=-(3.0D0*SPWT(IGRP(L))*A*(AL**3))/(420.0D0*GV)
      SME(6,6)=SME(5,5)
      SME(8,6)=-SME(12,2)
      SME(12,6)=SME(11,5)
      SME(7,7)=SME(1,1)
      SME(8,8)=SME(2,2)
      SME(12,8)=-SME(6,2)
      SME(9,9)=SME(2,2)
      SME(11,9)=SME(6,2)
      SME(10,10)=SME(4,4)
      SME(11,11)=SME(5,5)
      SME(12,12)=SME(5,5)
      DO 2896 I=2,NDOFPE
      IM=I-1
      DO 2896 J=1,IM
 2896 SME(J,I)=SME(I,J)
C
C     REALIGN GLOBAL ELEMENT DISPLACEMENT VECTOR BACK TO LOCAL AXES
      TDX=(DX/AL)**2
      TDY=(DY/AL)**2
      IF(TDX.LT.1.0D-3) GO TO 2920
      IF(DX.LT.0.0D0) GO TO 2910
      KCOL=1
```

```
      GO TO 3050
 2910 KCOL=4
      GO TO 3050
 2920 IF(TDY.LT.1.0D-3) GO TO 2940
      IF(DY.LT.0.0D0) GO TO 2930
      KCOL=2
      GO TO 3050
 2930 KCOL=5
      GO TO 3050
 2940 IF(DZ.LT.0.0D0) GO TO 2950
      KCOL=3
      GO TO 3050
 2950 KCOL=6
 3050 DO 3550 N=1,KOUNT
      DO 3100 K=1,NNPE
      NDEX=NDOFPN*(K-1)
      IEZ=(NNA(NN(K,L))-1)*NDOFPN
      IF(IEZ.LT.0) IEZ=0
      DO 3070 J=1,NDOFPN
      JPI=IELGL((J,KCOL)+IEZ
      IF(NNA(NN(K,L)).EQ.0) GO TO 3060
      DUM(J+NDEX)=EIVR(JPI,N)*FACTRX(N)
      DUM1(J+NDEX)=EIVR(JPI,N)*FACTRY(N)
      DUME(J+NDEX)=EIVR(JPI,N)*FACTRZ(N)
      GO TO 3070
 3060 DO 3055 M=1,NDOFPN
      NDEX=NDOFPN*(K-1)
      DUM(M+NDEX)=0.0D0
      DUM1(M+NDEX)=0.0D0
 3055 DUME(M+NDEX)=0.0D0
 3070 CONTINUE
 3100 CONTINUE
C
C     COMPUTE THE NODAL GENERALIZED FORCES CONSISTING OF STATIC AND
C     INERTIA FORCES SUPERIMPOSED
C
      EIVUF=(2.0D0*PI*EIVU(N))**2
      DO 3150 I=1,NDOFPE
      TEMP=0.0D0
      TEMP1=0.0D0
      TEMP2=0.0D0
      DO 3140 J=1,NDOFPE
      TEMP=TEMP+((SKE(I,J)*DUM(J))-(EIVUF*(SME(I,J)*DUM(J))))
      TEMP1=TEMP1+((SKE(I,J)*DUM1(J))-(EIVUF*(SME(I,J)*DUM1(J))))
 3140 TEMP2=TEMP2+((SKE(I,J)*DUME(J))-(EIVUF*(SME(I,J)*DUME(J))))
      SM(I,1)=TEMP
      SM(I,2)=TEMP1
 3150 SM(I,3)=TEMP2
```

```
      DO 3160 I=1,NDOFPE
      DUM(I)=SM(I,1)
      DUM1(I)=SM(I,2)
 3160 DUME(I)=SM(I,3)
C
C     COMPUTE THE NORMAL AND SHEARING STRESSES AT THE NODES OF AN
C     ELEMENT FOR A FIBER LOCATED AT THE TOP AND ONE AT THE SIDE OF THE
C     ELEMENT
C
      APS=(12.D0*ANERT*(DO(IGRP(L))-DI(IGRP(L))))/(DO(IGRP(L))**3-DI(IGR
     1P(L))**3)
      F=(2.0D0*ANERT)/DO(IGRP(L))
      ONE=1.0D0
      DO 3200 I=1,NNPE
      NAD=4*(I-1)
      IAD=NDOFPN*(I-1)
      IF (I.EQ.2) ONE=-1.0D0
      DDDX=DUM(1+IAD)
      DDDY=DUM1(1+IAD)
      DDDZ=DUME(1+IAD)
      DUM(1+NAD)=(ONE*(-DUM(1+IAD)/A))+(ONE*(-DUM(5+IAD)/F))
      DUM1(1+NAD)=(ONE*(-DUM1(1+IAD)/A))+(ONE*(-DUM1(5+IAD)/F))
      DUME(1+NAD)=(ONE*(-DUME(1+IAD)/A))+(ONE*(-DUME(5+IAD)/F))
      DUM(2+NAD)=(ONE*(-DUM(4+IAD)/(2.0D0*F)))+(ONE*(DUM(2+IAD)/APS))
      DUM1(2+NAD)=(ONE*(-DUM1(4+IAD)/(2.0D0*F)))+(ONE*(DUM1(2+IAD)/APS))
      DUME(2+NAD)=(ONE*(-DUME(4+IAD)/(2.0D0*F)))+(ONE*(DUME(2+IAD)/APS))
      HOLDX=DUM(3+IAD)
      HOLDY=DUM1(3+IAD)
      HOLDZ=DUME(3+IAD)
      DUM(3+NAD)=(ONE*(-DDDX/A))+(ONE*(-DUM(6+IAD)/F))
      DUM1(3+NAD)=(ONE*(-DDDY/A))+(ONE*(-DUM1(6+IAD)/F))
      DUME(3+NAD)=(ONE*(-DDDZ/A))+(ONE*(-DUME(6+IAD)/F))
      DUM(4+NAD)=(ONE*(-DUM(4+IAD)/(2.0D0*F)))+(ONE*(HOLDX/APS))
      DUM1(4+NAD)=(ONE*(-DUM1(4+IAD)/(2.0D0*F)))+(ONE*(HOLDY/APS))
 3200 DUME(4+NAD)=(ONE*(-DUME(4+IAD)/(2.0D0*F)))+(ONE*(HOLDZ/APS))
C
C     FIND THE OCTAHEDRAL SHEARING STRESSES AT EACH NODE
C
      DO 3250 I=1,NNPE
      IOD=2*(I-1)
      IOD=4*(I-1)
      RF=(1.0D0/3.0D0)
      DUM(1+IOD)=RF*(DSQRT(2.0D0*DUM(1+IOD)**2+6.0D0*DUM(2+IOD)**2))
      DUM1(1+IOD)=RF*(DSQRT(2.0D0*DUM1(1+IOD)**2+6.0D0*DUM1(2+IOD)**2))
      DUME(1+IOD)=RF*(DSQRT(2.0D0*DUME(1+IOD)**2+6.0D0*DUME(2+IOD)**2))
      DUM(2+IOD)=RF*(DSQRT(2.0D0*DUM(3+IOD)**2+6.0D0*DUM(4+IOD)**2))
      DUM1(2+IOD)=RF*(DSQRT(2.0D0*DUM1(3+IOD)**2+6.0D0*DUM1(4+IOD)**2))
 3250 DUME(2+IOD)=RF*(DSQRT(2.0D0*DUME(3+IOD)**2+6.0D0*DUME(4+IOD)**2))
```

```
C
C     STORE THE OCTAHEDRAL SHEARING STRESSES
C
      DO 3300 I=1,4
      IL2=3*L-2
      IL1=3*L-1
      IL=3*L
      SK(I,IL2)=SK(I,IL2)+(DUM(I)**2)
      SK(I,IL1)=SK(I,IL1)+(DUM1(I)**2)
 3300 SK(I,IL)=SK(I,IL)+(DUME(I)**2)
 3550 CONTINUE
 3600 CONTINUE
      LOP=3*NET
      DO 3650 I=1,LOP
      DO 3650 J=1,4
 3650 SK(J,I)=DSQRT(SK(J,I))
      WRITE(6,4006)
      DO 3660 I=1,NET
      WRITE(6,4008) I
      NMO=3*(I-1)+1
      NTO=3*I
      DO 3659 J=1,4
      WRITE(6,4005)(SK(J,K),K=NMO,NTO)
 3659 CONTINUE
      WRITE(6,4010)
 3660 CONTINUE
 4005 FORMAT(' ',/(9X,3(1X,1PD12.5)))
 4006 FORMAT('1',//,10X,'COMBINED OCTAHEDRAL SHEARING STRESSES EACH ELEM
     1ENT',//)
 4008 FORMAT(' ',/,10X,'ELEMENT',I5)
 4010 FORMAT(' ',//)
      RETURN
      END
```

LIST OF REFERENCES

1. Zienkiewicz, O.C., The Finite Element Method in Engineering Science. McGraw-Hill, 1971.

2. Przemieniecki, J.S., Theory of Matrix Structural Analysis, McGraw-Hill, 1968.

3. Housner, G.W., "Behaviour of Structures During Earthquakes," ASCE Journal of Engineering Mechanics Division, EM4, October 1959, pg. 109-129.

4. ASME, Shock and Structural Response, Papers presented at the Shock and Structural Response Colloquium at the Annual meeting of the ASME, November 1960.

5. Newmark, N.M., and Rosenblueth E., Fundamentals of Earthquake Engineering, Prentice-Hall, 1971.

6. Naval Ships System Command, Shock Design of Shipboard Equipment, Dynamic-Design-Analysis Method, NAVSHIPS 250-423-30, May 1961.

7. Fink, G.E., Vibration Analysis of Piping Systems, MS Thesis, Naval Postgraduate School, Monterey, Calif. 1964.

8. Baird, W.S., Vibrational Analysis of Three Dimensional Piping Systems with General Topology, MS Thesis, Naval Postgraduate School, Monterey, Calif. 1965.

9. Rudolf, C.D., III, Vibrational Analysis of Three Dimensional Piping Via Transfer Matrices, MS Thesis, Naval Postgraduate School, Monterey, Calif. 1971.

10. Timoshenko, S., and Young, D., Elements of Strength of Materials, Van Nostrand, 1968.

11. Benfield, W.A., and Hruda, R.F., "Vibration Analysis of Structures by Component Mode Synthesis," AIAA Journal, Vol. 9, No. 7, pg. 1255-1261, July 1971.

12. Sines, G., Elasticity and Strength, Allyn and Bacon, 1969.

13. Thomson, W.T., Vibration Theory and Applications, Prentice-Hall, 1965.

14. Irons, B., "Eigenvalue Economisers in Vibration Problems," Journal of the Royal Aeronautical Society, Vol. 67, pg. 526-528, August 1963.

15. Meirovitch, L., Analytical Methods in Vibrations, Macmillan, 1967.