AD-750 845

A STUDY OF THE ALTERNATIVE METHODS OF MEETING THE MILITARY REQUIREMENTS FOR STRATEGIC AIRLIFT IN THE 1970'S

James M. Galyen, et al

Air Force Institute of Technology
Wright-Patterson Air Force Base, Ohio

15 September 1972

DISTRIBUTED BY:

NTIS

National Technical Information Service
U. S. DEPARTMENT OF COMMERCE
5285 Port Royal Road, Springfield Va. 22151

AD750845

D D C
RECEIVED
NOV 10 1972
C

Reproduced by
NATIONAL TECHNICAL
INFORMATION SERVICE
U S Department of Commerce
Springfield VA 22151

UNITED STATES AIR FORCE

AIR UNIVERSITY

AIR FORCE INSTITUTE OF TECHNOLOGY

Wright-Patterson Air Force Base, Ohio

DISTRIBUTION STATEMENT A

Approved for public release;
Distribution Unlimited

Security Classification

DOCUMENT CONTROL DATA - R & D

(Security classification of title, body of abstract and indexing annotation must be entered when the overall report is classified)

1. ORIGINATING ACTIVITY *(Corporate author)*
Air Force Institute of Technology,
School of Systems and Logistics

2a. REPORT SECURITY CLASSIFICATION

2b. GROUP

3. REPORT TITLE
A Study of Alternative Methods of Meeting the Military Requirements for Strategic Airlift in the 1970s.

4. DESCRIPTIVE NOTES *(Type of report and inclusive dates)*
Thesis

5. AUTHOR(S) *(First name, middle initial, last name)*
James M. Galyen, Captain
William E. Krebs, Captain

6. REPORT DATE
15 Sep 72

7a. TOTAL NO. OF PAGES
195

7b. NO. OF REFS
148

8a. CONTRACT OR GRANT NO.

b. PROJECT NO.

c.

d.

9a. ORIGINATOR'S REPORT NUMBER(S)
SLSR-14-72B

9b. OTHER REPORT NO(S) *(Any other numbers that may be assigned this report)*

10. DISTRIBUTION STATEMENT
Publish and distribute under Provisions of Statement A, unlimited distribution. (DDC, AFR 80-45)

11. SUPPLEMENTARY NOTES
Cleared for public release IAW AFR 190-17.

12. SPONSORING MILITARY ACTIVITY
JERRY C. HIX, Capt, USAF
Director of Information

13. ABSTRACT

The requirement for a viable strategic airlift capability will become increasingly more important for defense planners in the 1970s and 1980s. The strategy to reduce overseas garrisons and prepositioning of supplies will place a greater burden on strategic airlift to support the Nixon Doctrine of having the capability to engage in one and one-half wars. To compound the problem, the commercial carriers have been very reluctant to purchase the large cargo jets to supplement the Military Airlift Command. Through their research the authors explore possible alternatives for strategic airlift in the ensuing decade.

Key Words:

Strategic Airlift

Military Airlift Command (MAC)

Commercial Carriers

Routine Economic Airlift (REAL)

ia

DD FORM 1 NOV 65 1473

Security Classification

NOV 16 1972

A STUDY OF THE ALTERNATIVE METHODS OF MEETING THE MILITARY REQUIREMENTS FOR STRATEGIC AIRLIFT IN THE 1970s

James M. Galyen, B.S., Captain, USAF
William E. Krebs, B.A., Captain, USAF

SLSR-14-72B

ib

SLSR-14-72B

A STUDY OF THE ALTERNATIVE METHODS OF MEETING THE MILITARY REQUIREMENTS FOR STRATEGIC AIRLIFT IN THE 1970s

A Thesis

Presented to the Faculty of the School of Systems and Logistics of the Air Force Institute of Technology

Air University

In Partial Fulfillment of the Requirements for the Degree of Master of Science in Logistics Management

By

William E. Krebs
Captain, USAF

James M. Galyen
Captain, USAF

September 1972

Approved for public release;
distribution unlimited

This thesis, written by

Captain James M. Galyen

and

Captain William E. Krebs

and approved in an oral examination, has been accepted by the undersigned on behalf of the faculty of the School of Systems and Logistics in partial fulfillment of the requirements for the degree of

MASTER OF SCIENCE IN LOGISTICS MANAGEMENT

Date: 15 September 1972

Committee Chairman

Committee Member

Committee Member

ACKNOWLEDGEMENTS

A research project is never completed and written without the help and support of others. This project is no exception.

We express our thanks to Albert J. Bien, Manager of Cargo Analysis and Development Division, Commercial Airplane Group, Boeing Aircraft Company, Everett, Washington, for his cooperation and technical expertise.

A special tribute is also due Captain Stephen J. Greenberg, Ph.D., of the Humanities Department, AFIT School of Engineering, Wright-Patterson AFB, Ohio, for his patience in correcting our many grammatical errors.

Equally important, we express our thanks to our advisor, Lt Col Carl L. Gordon, School of Systems and Logistics, and to our readers, Captain Lonnie L. Ostrom, School of Systems and Logistics and Mr. Charles C. Jackson, Jr., School of Systems and Logistics, for their faith in our capabilities in allowing us complete academic freedom to accomplish this research.

TABLE OF CONTENTS

	Page
ACKNOWLEDGEMENTS	iii
LIST OF TABLES	vii
LIST OF FIGURES	viii
CHAPTER	
I. PROBLEM	1
Problem Statement	1
Background	2
Conflict	5
DOD Ignores CRAF	6
Airlift Expansion	6
Reduction in Cargo for CRAF	9
Airlift Deficiency in War	10
RAND Proposal	12
REAL Program	12
MAC vs CRAF	13
Scope	14
Objective	16
Hypotheses	16
Procedures	17
II. AIRLIFT FOR THE FUTURE	20
Priorities for Defense Strategy	20
Nixon Doctrine	23
Versatility--The Key	24
Synthesis	25
Airlift	25
Future Cargo	26
REAL Program	27
The Future of Air Freight	28
Sea vs Air	29
Evolution of Airlift	31
Logistics in Motion	33

CHAPTER Page

Authors' Note 35
Tandem Base Logistic Support. 35
Authors' Comment. 37
Synthesizing. 37

III. COMPARISON OF CRAF AND MAC. 39

CRAF. 39
Mechanical/Schedule Reliability 41
Utilization 43
Reliability 43
Physical Characteristics. 43
Turn-Around Time. 45
Ground Handling Equipment 45
Tie-down Capabilities. 49
MAC 51
Landing Gear-Kneeling 56
Air Transportable Dock. 57
Reliability and Maintainability 60

IV. CAPABILITIES. 67

Contingency Operation 67
Normal Operation. 77

V. COST. 83

Background. 83
Facts and Assumptions 88
Development of Requirements 91
Development of the Incremental Ton-Mile Cost. 98
Flying Hour, Capability and Expense Comparison. 101

VI. JUSTIFICATION FOR CRAF. 106

Need for CRAF 106

VII. CONCLUSIONS AND RECOMMENDATIONS 110

Conclusions 110
Recommendations 111
Recommended Research. 114

CHAPTER Page

APPENDICES

A. Physical Characteristics of Jet Aircraft in CRAF and MAC 115

B. Comparative Factors Effecting the Mechanical Schedule Reliability for the B-747B. 127

C. Cargo Compartment Description of the C-5A, C-141, 747C/F 135

D. Physical Characteristics of the 747C/F. 141

E. Cargo Carrying Capability of the DC-10. 153

F. Relative Allowable Cabin Loads for the Primary Aircraft in MAC and CRAF. 155

G. Mission Abort and Major Subsystem Reliability Figures for the C-5A. 158

H. Cost per Hour and Cost per Ton Nautical Mile for the C-141 and C-5A 165

I. Direct Operating Cost Computations for the Civilian and Military Transport Aircraft. 167

BIBLIOGRAPHY. 182

LIST OF TABLES

Table		Page
1.	1974 CRAF Composition International Class Jets	4
2.	How DOD Moves Its International Air Passengers and Cargo	11
3.	Runway Restrictions	57
4.	C-5A Reliability Growth Potential	64
5.	Contingency Airlift of One Army Division by MAC	71
6.	Contingency Airlift of Two Army Divisions by MAC	72
7.	Contingency Airlift of Three Army Divisions by MAC	73
8.	Contingency Airlift of One Army Division by MAC and CRAF	74
9.	Contingency Airlift of Two Army Divisions by MAC and CRAF	75
10.	Contingency Airlift of Three Army Divisions by MAC and CRAF	76
11.	C-141 Daily Outbound Productive Capability	79
12.	C-5A Daily Outbound Productive Capability	80
13.	Total MAC Outbound Productive Capability	81
14.	CAB International Military Cargo Rates	85
15.	One-Way ASIF International Cargo Rate	87
16.	Channel Cargo and SAAM Requirement Projections	97

LIST OF FIGURES

Figure		Page
1.	Levels of Conflict	24
2.	C-5A Unloading F-111	32
3.	Average Gross Payload	43
4.	Military Freighter	44
5.	Field Expedients	47
6.	Cargo/Vehicle Tiedown Capability	50
7.	General Characteristics of the C-5A	53
8.	Air Drops	55
9.	Kneeling and Cargo Floor Positioning	56
10.	Air Transportable Dock	58
11.	747F Air-Transportability Summary	61
12.	Representative Payload	62
13.	CH-47's Positioned in C-5A	62
14.	Airlift Capability Produced by Minimum Utilization Rates	92

CHAPTER I

PROBLEM

Problem Statement

A dilemma is facing the Department of Defense (DOD)--how to motivate the Civilian Reserve Air Fleet (CRAF) to buy large numbers of jumbo cargo jets while reducing the percentage of cargo carried by the commercial carriers. With the Vietnam conflict slowing down and the addition of the C-5, the Military Airlift Command's (MAC) organic airlift capability has increased substantially in the past two years. Even with this increased capability, MAC's air fleet is considered to be too small to adequately support DOD's wartime airlift requirements. Since 1969, the civilian contract carriers have experienced heavy losses in profit. This loss, coupled with the accumulation of large debts from the acquisition of new aircraft purchased in the 1960s, has significantly depressed the airline industry.

Background

The Civil Reserve Air Fleet (CRAF) concept was originated in 1952. Under the initial plan, only the entire CRAF fleet could be activated. The program's flexibility was increased in 1963 so that CRAF could respond more readily to limited as well as general emergencies. (81:22)

The basic procedure for assigning aircraft to CRAF is relatively simple. MAC determines the number and types of civilian aircraft needed and submits the information to DOD who, in turn, forwards it to the Department of Transportation (DOT). DOT then formally assigns the aircraft to CRAF.

CRAF, when mobilized, is assigned to MAC and performs under contracts that have already been arranged between MAC and the various carriers supplying the aircraft and aircrews. To date, CRAF has never been formally activated. Voluntary expansion of the peacetime contracts by civilian carriers has been sufficient to handle the airlift requirements. (82:18)

Although never used, several stages (or states of emergency) exist for calling up CRAF:

STAGE I. An emergency is declared by the Secretary of Defense without the President's approval. The aircraft are committed within 24 hours to CRAF but operate under peacetime procedures.

STAGE II. An emergency is declared by the Secretary of Defense and approved by the President. The aircraft are available within 24 hours, but operate under wartime operational control of the MAC Battle Staff.

STAGE III. This declaration is reserved for war, an unlimited national emergency, or a civil defense emergency, declared by the President or Congress. All aircraft will be available within 48 hours, and will be fully equipped for worldwide assignments. The aircraft will be controlled by the MAC Battle Staff. (96:4)

Several tense situations have required rapid expansion in the use of the civilian air fleets. During the critical period following the TeT offensive and the capture of the USS Pueblo, MAC asked the CRAF carriers to double their airlift contracts immediately and to avoid the necessity of declaring a STAGE I emergency. Although it meant cancelling a number of scheduled commercial flights, the CRAF carriers did so and committed their airframes and crews to MAC.

The composition of CRAF varies. At present, the following carriers--16 route-scheduled airlines and 8 supplemental carriers--belong to CRAF.

CRAF Carriers

Airlift International	Reeve Aleutian (Alaska only)
Alaska Airlines	Saturn Airways
American Airlines	Seaboard World Airlines
American Flyers Airlines	Southern Air Transport
Braniff Int'l Airways	Trans Caribbean Airways
Capitol Airways	Trans International Airlines
Continental Air Lines	Trans World Airlines
Eastern Air Lines	United Air Lines
Flying Tiger Line	Universal Airlines
Northwest Airlines	Western Airlines (Stage III only)
Overseas National Airways	Wien Consolidated (Alaska only)
Pan American World Airways	World Airways

The essential portion of CRAF has always been the international fleet. As larger commercial jets become available, they will be integrated into this fleet.

Estimated strength of the international fleet for 1974 is illustrated in Table 1.

TABLE 1

1974 CRAF COMPOSITION
INTERNATIONAL CLASS JETS

	Cargo	Conv	Passenger
Wide-Bodied			
747	0	5	42
DC-10	0	5	
Stretched			
DC-8-60 Series	13	49	36
Standard			
B-707	42	69	38
DC-8	15	15	
TOTALS	70	143	116

(96:7)

Despite the impressive number of CRAF jets, there are few wide-bodied cargo aircraft to augment MAC's C-5 fleet. Notice that only 10 are projected to be in service with CRAF by 1974. This figure may be too optimistic since only three 747Cs have been sold and are scheduled for delivery in 1973.

Conflict

The problem of who should carry military cargo and personnel is not a new one. The conflict between the Commercial carriers and the United States Air Force dates back to the early 1950s when the civilian air carriers claimed that the Military Air Transport Service (MATS) was competing with them for movement of passengers and routine cargo.

In an effort to resolve the conflict, the Department of Defense (DOD) initiated a series of studies in 1951. All of these studies recommended that a program be established to augment the Military Airlift system with commercial carriers during periods of national emergencies. The fear of more Berlin Airlifts lent credence to the hypothesis that the military airlift could not satisfy foreseeable contingencies. Consequently, the first plan for the Civil Reserve Air Fleet (CRAF) was issued by DOD in March, 1952. (81:21) The early policies and directives specified that the

commercial carriers in CRAF were to be DOD's primary source for movement of passengers and cargo. (76:128)

DOD Ignores CRAF

As MATS fleet of military aircraft expanded during the 1950s, DOD became increasingly reluctant to use CRAF, instead they scheduled most passenger and cargo movement on military aircraft. DOD's refusal to solicit CRAF created a fervor of activity in Congress. (37:27)

Congressional observers and CRAF members claimed that the quality of the commercial fleet was being degraded. The percentage of cargo transported by civilian carriers was not enough to maintain a first-line fleet.

In 1960, an investigation by the Airlift Subcommittee of the House Armed Services Committee, reported the following:

> In the cargo area CRAF's capability is not only grossly inadequate in terms of capacity, but is limited and outmoded in terms of equipment . . . . There is not a single aircraft in CRAF's cargo fleet which was specifically designed for cargo operations. (76:61)

Airlift Expansion

Smarting from the deluge of criticism from congressmen and lobbyists for CRAF, the DOD issued a report entitled "The Role of Military Air Transport Service in Peace and

War" in 1960. This report became the primary source for airlift policy in the ensuing decade. The commercial carriers constantly refer to this document in their claims for more airlift. A number of specific presidential approved courses of action were set forth in this report designated to implement previous policies and directives:

> 1) MATS should be equipped and operated in peacetime to meet approved military hardcore requirements in a general war and in situations short of general war, and such other military requirements as cannot be met adequately by commercial carriers on an effective and timely basis.
>
> 2) Curtailment of MATS operations with respect to other than hardcore traffic, and the expanded utilization of commercial carriers for these purposes.
>
> 3) To provide greater incentive for expansion of the civil cargo fleet. The report called for the elimination of competitive bidding for economical reasons.
>
> 4) Proposed a major overhaul of the CRAF program and the development of a formula by which a carrier's share of military contracts could be determined by such factors as the carrier's contribution to CRAF in terms of the numbers, types and performance characteristics of the aircraft committed to the program by the carrier. (76:62)

The policies of this report were promptly implemented. A rapid expansion and modernization of both the military and civil segments of the airlift system followed.

As a result of the new policies adopted at the beginning of the 60s, the cargo capacity of both the military

and civil carriers was greatly expanded and modernized.

MAC has acquired 279 (234 UE) C-141s and complemented their force structure with 81 (70 UE) C-5s. To account for aircraft allocated to training, command support, and attrition, DOD planners consider only unit equipped (UE) aircraft in determining size of force. For the remainder of the thesis the authors will be concerned only with UE aircraft.

On the civilian side, turbine powered cargo and cargo-convertible aircraft have been acquired and committed to CRAF. The total civilian capacity in cargo ton miles committed to CRAF has increased five and one-half fold since 1960. (76:64)

Despite the tremendous increase in the airlift capability of both CRAF and MAC in the 1960s, there was still insufficient airlift capability to meet the nation's defense needs. The advent of large cargo jets had driven the cost per ton mile down to where it became more economical to airlift high priority items. This additional capability, coupled with the rapid build-up of the Vietnam War, created more cargo airlift requirements than what our airlift forces could handle. (57)

The House Airlift Subcommittee of the Armed Services supports this position with a report issued in 1970:

> The problem of obtaining adequate commercial cargo airlift to augment our military capability in times of emergency remains. At the time of the Subcommittee hearings, no wide-bodied cargo jecs had been ordered by the U.S. civil carriers and only ten wide-bodied convertible aircraft had been ordered. The convertible "jumbo jets" have been ordered by supplemental Air Carriers with an option to procure an additional five aircraft. The large scheduled air carriers have not ordered these large cargo/convertible aircraft apparently because of cost and the lack of a commercial requirement for this increased cargo capability. It is obvious to the committee that the procurement of the jumbo cargo/convertible aircraft will be at a slow pace unless some incentive is offered to the carriers to obtain these aircraft and contribute that increased capability and flexibility toward meeting military requirements. (4:65)

Reduction in Cargo for CRAF

The 1970s have produced a sudden reversal in airlift policy. MAC has been utilizing the civilian carriers only when the airlift requirements can not be adequately met by MAC. This change in policy can be contributed to the following factors:

1. The rapid withdrawal of forces from Vietnam and other countries in Southeast Asia.

2. The addition of the C-5 to MAC's force structure. This aircraft has greatly increased MAC's airlift capability.

3. Leadership positions in DOD and the Air Force had new faces with new ideas. (59)

In 1967, CRAF airlifted 33 percent of the military cargo; in 1971, they moved only 10.8 percent. (See Table 2) The loss of contracts has had severe impact on the commercial airlines' ambitions to buy additional wide-bodied cargo jets.

The House Airlift Subcommittee in late 1970 reported:

> This reduction in cargo airlift allocated to the CRAF participants is no incentive for the commercial carriers to order new cargo aircraft to offset the existing deficit.
>
> The C-5A was designed to airlift vehicles and cargo outsize to the C-141, not troops or general cargo. Yet the Air Force and MAC now propose to use the C-5 in peacetime for movement of general cargo--both bulk and palletized--under the guise of maintaining flight crew proficiency.
>
> The effect of such a policy will be the elimination of a substantial commercial cargo airlift capability now available from the civil carriers, in particular the supplementals. (76:14)

Airlift Deficiency in War

Current military planning for total airlift requirements in time of war or grave national emergency, envision using the organic fleet of military aircraft, principally C-5s and C-141s, augmented by the commercial aircraft committed to CRAF. At present, total airlift available from these sources is deemed insufficient to satisfy wartime

TABLE 2

HOW DOD MOVES ITS INTERNATIONAL AIR PASSENGERS AND CARGO

Fiscal Year	Tons of Cargo (1,000) Total	Tons of Cargo (1,000) Commercial	Number of Passengers (1,000) Total	Number of Passengers (1,000) Commercial	Percent Moved Commercially Cargo	Percent Moved Commercially Passenger
1960	169	20	993	429	11.6	43.1
1961	160	26	987	409	16.5	14.4
1962	119	74	992	558	62.0	56.2
1963	184	69	1,158	768	37.4	66.3
1964	197	44	1,102	754	22.1	68.4
1965	253	66	1,127	817	26.0	72.4
1966	338	102	1,616	1,446	30.1	89.5
1967	599	202	2,124	1,929	33.6	90.8
1968	679	163	2,700	2,482	24.0	91.9
1969	725	148	2,920	2,719	20.3	93.0
1970	659	104	2,891	2,627	15.7	90.8
1971	584	63	2,540	2,310	10.8	90.9

Sources: 1960-1969, USAF data for House Armed Services Subcommittee on Military Airlift; 1970-1971, Military Airlift Command actuals for 1970 and 1971.

needs and it has been estimated that at least 85 more of the so-called wide-bodied jet cargo types are needed in the CRAF fleet to satisfy current planning for airlift in wartime or in the event of other major contingencies. (59)

RAND Proposal

A RAND Study in 1970 proposed that MAC put its entire C-141 fleet (234 aircraft) into the reserves. This proposal would upgrade the reserve capability, and would shift enough cargo business to CRAF to warrant purchasing the out-sized cargo jets. (45:15)

The Air Force answer to the RAND proposal was a quick "NO!" The idea was reported to have been rejected in the very briefing in which it was suggested. (45:15)

REAL Program

The curtailment of the war in Vietnam has revealed some stark realities of what can happen in a war situation. In Vietnam, the Army stockpiled millions of dollars worth of equipment. The problem now is how to get it home. It has been determined that for most of the items, it would cost more to ship it back to the U.S. than to leave it in Vietnam.

In order to prevent a reoccurrence in a future conflict the Army has adopted the Routine Economic Air Lift (REAL) Program which was implemented on September 15, 1971. (57)

The Army's REAL Program is structured on the premise that it is cheaper to airlift high-value inventory items instead of having them stored in warehouses around the world. Significant savings can be realized through routine air shipment of selected items, cancellation of requisitions, reduction of stock levels and reduction of procurement of applicable items. (68)

Mr. Whittaker has stated that the REAL Program will result in an increase of airlift requirements of 200 thousand tons per year; however, only 7 thousand tons were utilized in the first four months of existence. (76:150)

What impact the REAL Program will have on airlift in the 1970s is one of the areas which the authors will explore. Later chapters of this thesis will report those findings.

MAC vs CRAF

To the knowledge of both authors, there has been little research directed into the feasibility of civilian contract carriers replacing or supplementing MAC for the responsibility of strategic airlift. A report written by

Lt/Col Charles Irions, "MAC's Dilemma: Competition With Its Civil Reserve Air Fleet" in March, 1971, identifies the two antagonists which he labels MAC vs CRAF; however, he does not offer any solutions. (96:1) The authors of this study hope to propose alternative solutions to the dilemma by thoroughly analyzing CRAF's capability to determine if it is feasible for them to replace MAC as DOD's prime source for airlift. For the most part, the effort directed on this study was one of original research. The subject matter in this study is very important and will have a profound affect on logistics planning in the 1970s.

Scope

Strategic airlift is defined by the United States Air Force Dictionary as "the continuous or sustained air transportation of personnel or material, or both, between theatres, or between the zone of interior and overseas theatres, to provide logistic support for a military effort." (2:493) The authors further expanded this definition to include areas established as free from hostile forces or firepower, with concrete or equivalent runways, and with facilities to support large jet cargo aircraft adequately.

This study was not concerned with tactical airlift which involves the movement of cargo from the before mentioned "safe areas of operation" to the forward combat areas directly supporting the combat theatre commanders. The constraints of this study make it impossible to cover adequately the dynamic role of tactical airlift and the challenges that it is encountering in the 1970s.

The requirements which the Army will levy against DOD for movement of cargo by air will be studied in depth. The Army is the major customer of MAC and their concept of depots and what quantity of cargo is needed to support their forces outside the Continental United States (CONUS) will affect Air Force logistic strategists in the 1970s.

The primary purpose of this thesis is to explore the feasibility of the civilian contract carriers to replace or augment the Military Airlift Command. Numerous factors must be analyzed--efficiency of operation, cost of civilian vs military, operation in general war vs peacetime, standardization of cargo containers, runway restrictions, ease of off-loading and loading carriers, and establishment of an organization to operate the system as effectively as MAC does today. This list is but a few of the many important functions that must be analyzed in detail.

Objectives

The primary objective of this research was to determine if CRAF is a realistic concept for the 1970s and 1980s. Should the partnership of MAC and CRAF continue?

The second objective was to analyze the strategic airlift capabilities of MAC and CRAF during normal and contingency operations.

The third objective was to analyze the Army's REAL program to determine what impact it would have on airlift logistics plans for the future.

Hypotheses

The authors will test the following hypotheses:

1. The contract carriers in the Civil Reserve Air Fleet are better adept in fulfilling the Department of Defense's Strategic Airlift requirements than the Military Airlift Command.

A test of comparison will be made in the following areas:

a. Airlift Capabilities

(1) Loading
(2) Containerized cargo
(3) Interface with DOD equipment
(4) Interface with Army's logistic requirements
(5) Airfield restrictions
(6) Cargo restrictions

b. Cost Considerations

c. Interface with the Tactical Airlift Aircraft

2. The contract carriers and the Military Airlift Command can successfully complement one another to adequately support strategic airlift.

The authors will analyze the following areas:

a. What impact would a combined fleet of CRAF and MAC have on our National Defense posture?

b. What impact would it have on the Army's REAL Program?

c. Is there enough defense cargo to economically satisfy the demands of MAC and CRAF?

d. What percentage of the cargo should CRAF airlift?

e. What are the cargo restrictions?

f. Should MAC control CRAF or should there be another governing body?

Procedures

The primary methods of collecting data were from personal interviews, telephone conversations, and written correspondence.

The topic is controversial and many sources contacted were very sensitive toward responding to questions for fear of jeopardizing their side interest in the current legislation which is before Congress.

In order to insure validity and to minimize biasness in the thesis, the authors contacted numerous individuals from both MAC and CRAF.

To test the first hypothesis, it was necessary to obtain as much factual data as possible to adequately compare MAC vs CRAF in terms of effectiveness, capabilities and cost.

To measure the effectiveness and capabilities of the CRAF fleet, the authors collected data from written correspondence from Boeing Aircraft Company and World Airways. Personal interviews were conducted with Air Transport Association, MAC Headquarters and Airlift Plans in the Pentagon. Supplemental information was obtained from congressional records, periodicals, MAC Management Reports, RAND Reports and Unpublished reports from MAC, Boeing Aircraft Company and World Airways.

Factual answers to the following questions were necessary in order to accurately appraise CRAF's effectiveness and capability:

1. Maintainability and reliability of aircraft in CRAF.

2. Turnaround time.

3. Loading and unloading equipment and procedures; i.e., special docks.

4. Interface problems with the Army.

5. Containerized cargo configurations.

6. Airfield restrictions.

7. Cargo restrictions.

To appraise adequately the Army's REAL Program and its impact on airlift, personal interviews were conducted with MAC Headquarters, Airlift Plans (Pentagon), J-4 Logistics Officers (Pentagon) and Army Logistics Officers in the Army Material Command.

It was essential to determine the Army's cost break-even point for purchasing airlift in lieu of surface transportation.

To measure airlift requirements in the 1970s, it was necessary to determine what emphasis the Army is going to place in the REAL Program.

Supplemental data was extracted from library research and periodicals.

To understand the policies which govern the Military Sealift Command, personal interviews were conducted with the Navy J-4 Logistics in the Pentagon. Information obtained was cost per mile, method of procurement, governing policies and the future of the Sealift Command. Supplemental data was obtained from periodicals.

CHAPTER II

AIRLIFT FOR THE FUTURE

The purpose of this chapter is to quantify the thoughts of logistic planners as to the role of airlift in the 70's and 80's. What possible changes are forthcoming in the development of the airlift mission? What quantity of cargo is expected to be moved by the Army's REAL Program? Basically, the chapter is designed to give the reader a brief scenario of the airlift mission in the future as envisioned by today's airlift planners and the authors.

Priorities for Defense Strategy

In the opinion of the authors, the people of the United States are becoming more involved with the policies implemented by government than ever before. They are more aware of their environment and are demanding to have a say as to their destiny. The nation is definitely in a period of transition.

"Society is demanding that its leadership take a careful look at the direction the nation is heading, and to redistribute its natural resources. The emphasis is

directed more towards domestic needs and less to military defense." (17:313) This change in attitude towards government spending can best be seen by analyzing the 1972 democratic convention. Most delegates and the party nominee opposed increased defense spending while strongly endorsing priorities of internal welfare.

The Democrats are not alone; many Republicans are supporting the philosophy of letting countries decide their own destiny without American intervention. Many individuals are demanding that the nation redefine its list of priorities claiming the Cold War philosophy of the 1950's and 60's has thawed and no longer applies to the future.

President Nixon expressed his opinion concerning priorities when he said:

> A nation needs many qualities, but it needs faith and confidence above all. Skeptics do not build societies; the idealists are the builders. Only societies that believe in themselves can rise to their challenges. Let us not then, pose a false choice between meeting our responsibilities abroad and meeting the needs of our people at home. We shall meet both or we shall meet neither. (17:313)

In response to this policy, defense planners are advocating the following defense strategy:

(1) Maintenance of strategic nuclear forces of unquestionable sufficiency.

(2) Limiting the use of American fighting forces in the offshore conflicts. American involvement would be limited to advice, weapons and financial support.

(3) Reduction of some American garrisons overseas.

(4) Development of highly mobile, quick reacting, hard-hitting general purpose forces. (17:313)

The transition will be difficult for many. The challenges facing our military leaders are substantial as they must strive to achieve quality and responsiveness with less working resources. This evolving military strategy has placed greater dependence upon mobility. Mobility that is rapid, reliable, responsive and sustaining.

General Catton, former Commander of the Military Airlift Command, stated that sustaining logistic support is vital if military success is to be achieved. "Ninety per cent of our logistic support must come by sea. If we are to do our job properly for the Defense Department, we must provide total strategic mobility and that includes sealift. I see no advantage--possibly even military disaster--in a situation where modern military and civilian aircraft team up to deliver a fighting force able to close with the enemy, only to find that an antiquated military and sealift force can't sustain their effort." (16:7)

The long range projection, in the opinion of the authors, is for reduced defense spending. The military leaders will be expected to accomplish more with less resources. More emphasis will be directed towards domestic needs with a marked reduction in this nation's role of military leadership of the free world.

Nixon Doctrine

The Nixon doctrine supports the authors' belief in less American involvement in foreign countries. ". . .the United States will participate in the defense and development of allies and friends, but America cannot and will not conceive all the plans, design all the programs, execute all the decisions and undertake all the defense of the free nations of the world. We will help where it makes a difference and is considered in our interest." (58)

In the case of general purpose forces the defense department's objective is to have the capability to engage in "one and one-half wars." This means that the country will maintain a force in being during peacetime that could simultaneously confront a communist attack in Europe and cope with a contingency operation elsewhere. (98:22)

Versatility--The Key

In the opinion of the authors, if any lessons have been learned subsequent to World War II, it should be the futility of trying to prevent all wars by deterrence at one level of conflict. It is most important that the U.S. has the capability to deter at all levels of conflict from small group warfare to nuclear war as seen in Figure 1.

SMALL GROUP WARFARE ⟶ GUERILLA ⟶ INSURGENCY

CIVIL WAR ⟶ LIMITED INTERNATIONAL ⟶ UNLIMITED INTERNATIONAL ⟶ UNCONDITIONAL WAR

Fig. 1.--Levels of Conflict (62)

Military thinking since World War II has followed the philosophy of Gulio Douhet, an Italian air prophet, who believed that massive, strategic air power was the key to military success. This philosophy led to the total war commitment with the belief that a strong strategic air arm would deter communist aggression. Unfortunately, this policy permeated throughout the Air Force chain of command. It severely restricted the versatility of the Air Force and limited its capability to total war. (62)

The long, arduous conflict in Vietnam, however, has changed military thinking on future conflicts, for now many

believe that future wars will be low keyed in nature. This change in Air Force thinking has led to the quick response, mobile strike force that is part of the Air Force doctrine today.

Synthesis

Admittedly, the authors have deviated from the central theme of airlift; however, the preceding paragraphs are important in that they illustrate the evolving changes in America's military posture. The reduction in forces and a move towards less involvement will have a profound impact upon the potential air cargo for the 1970s.

Airlift

Strategic airlift gives the military the means to achieve the best combination of garrison, prepositioning, and mobility to meet our defense requirements. A small, highly mobile force has the capability to be reflexed to any location because of strategic mobility. This kind of mobility is possible because of the characteristics inherent in today's jet cargo aircraft: flexibility, reliability and responsiveness. (17:314)

Future Cargo

Intermodal containers and pallets will be the common threads that will tie combat supply points directly to the activities that consolidate the loads for intermodal movement. Philip N. Whittaker, Assistant Secretary of the Air Force, Installations and Logistics says, "For the first time we see a concerted world-wide effort to develop transportation systems where supplies and material can be efficiently transferred from one mode to another. This intermodal trend has major significance for the military. In fact, it may prove to be a key factor for improving the strategic mobility required to support this nation's military strategy." (51:22)

Shipping and consolidation functions in the United States will have a direct and profound impact on the efficiency of logistic support in the combat area. Military as well as commercial air carriers in the past have given premium transportation service for the relatively low volume priority or emergency shipments. With the large jumbo jets the challenge of the 70s will be how to maximize the benefits of this new capacity and efficiency. In the opinion of the authors, both commercial and military planners must orient their thinking to both high speed and high volume.

REAL Program

The Army's Routine Economic Airlift Program (REAL) has not generated the air cargo envisioned by Secretary Whittaker and other defense planners. When the REAL Program was initiated in September, 1971, Secretary Whittaker anticipated air cargo tonnage in the magnitude of 200,000 tons per year. (77:150) This belief was based on the assumption that jumbo jets would shorten the pipelines, and inventories could be diminished with reduced savings.

The Army, however, felt the economic pinch of reduced defense spending and became hesitant in adopting new supply procedures. Higher tariff rates, plus numerous flying restrictions on the C-5A, have altered the thinking of the Army planners. Another disadvantage to the REAL program was that MAC could not promise the Army continued support if an unforeseen emergency arose. Thus, if the Army were tied to the concept of inventory in motion to resupply its troops in Europe, and if a limited war broke out in Southeast Asia requiring military airlift, the Army forces in Europe would be without sufficient airlift. Consequently, the REAL program generated only 20,000 tons of cargo in fiscal year 1972. The prospects for the future do not look much better with 24,000 tons predicted for 1973. From 1973 to 1978, the

forecast is for only 36,000 tons/year. Beyond 1978 there is a divergence of opinions; however, the optimism once displayed for the REAL program has been dampened considerably. Once proclaimed as the panacea of DOD airlift problems, the REAL program has been a disappointment to most airlift planners. (64)

The Future of Air Freight

In June, 1967, air transportation experts from government, industry and the academic community formed an ad hoc group called the Transportation Workshop whose purpose was to study the national air transportation system with special emphasis on the future. Based on a 20 percent annual growth in air freight from 1962 through 1966, the committee concluded that "Air freight is the fastest growing segment of the commercial air transportation system." (99:iii) They predicted an air freight boom for the 1970s.

The withdrawal of forces from Vietnam in 1969 and a lagging economy accompanying the phase-down of the war has prevented the predicted growth rate in air freight. (99:iv)

Purchase orders for the wide-bodied convertible and cargo jets were cancelled. At this time one freighter has been purchased by Lufthansa and three convertibles have been ordered by World Airways. (104) A number of jumbo jets have

been purchased, but they are passenger versions which have little value to the Department of Defense during wartime. The problem, as stated earlier, is how to entice the carriers into purchasing convertibles that can be used for movement of passengers during peacetime and used to move cargo in time of war.

The authors believe that the 1970s will be a period of slow growth in movement of air cargo. The mood of the country, as discussed earlier, is not one of expansion. A reduction in force structure accompanied by less defense spending has created an atmosphere of uncertainty and hesitation to action. The authors believe that leaders will be more reluctant to change methods of supply distribution. Consequently, with less traffic being moved by air, a fierce battle will emerge between surface and air transportation in addition to CRAF vs MAC for channel traffic.

SEA vs AIR

The large cost differential between sea and air transportation per ton-mile of war consumables is usually cited as the prime reason for the sea/land bridge decision for contingencies. The assumption here is that the period of conflict will be of sufficient duration to bring surface vessels to play. While it is true that the peacetime

transportation costs are distinctly lower for sea movement, there is considerably less differential when comparing total distribution costs. Moreover, it is not at all certain that wartime total distribution costs are significantly lower, especially if the comparison involves the procurement as well as the operation of one system.

Exorbitant costs in Vietnam supports this contention. Due to the lack of port facilities and self-sustaining ships, the expedited supplies to Vietnam resulted in a massive pile-up of ships off the coast.

An average of 100 ocean-going ships was either in the harbors or anchored off the coast each day during the massive build-up of forces. War-zone demurrage payment to shipowners for vessels waiting to be unloaded amounted to $200,000 daily or $1.4 million per week. At the same time other ships enroute to Vietnam were held at the Philippines, Okinawa and Japan in order to avoid further congestion. Sixty percent of our supplies flowed through Saigon where the average wait for each ship to unload was 22 days. The waiting time at the other two major ports was 31 days at Cam Ranh Bay and 40 days at Da Nang. The cost to improve port facilities in Vietnam has been estimated from $150 to $200 million. (139:7)

It is beyond the scope of this thesis to attempt detailed comparison of the costs and benefits of sea versus air transportation. Such a study, however, would be a valuable contribution to the national interest. The potential revolution in air transportation and total distribution is in danger of being overlooked due to the inertia which our complex, delicately balanced system has created.

Evolution of Airlift

The evolution in airlift has been swift and dramatic in the last 20 years. The DC-3 in the 1950s weight-wise could carry only about 1/30th of what a C-5 is capable of carrying. Bulkwise, there's no comparison, as the C-5 is capable of carrying aircraft (see Figure 2). Even though air transport has made spectacular achievements in hardware there have been few changes implemented in cargo handling and terminal procedures. Our basic philosophy of prepositioning and movement of supplies from origin to destination has not, in the opinions of the authors, kept pace with the achievements in aircraft technology. A number of new concepts have recently emerged of which the authors will elaborate on two of them. Both are gradually being accepted as possible alternatives to prevent future supply entanglements that engulfed South Vietnam.

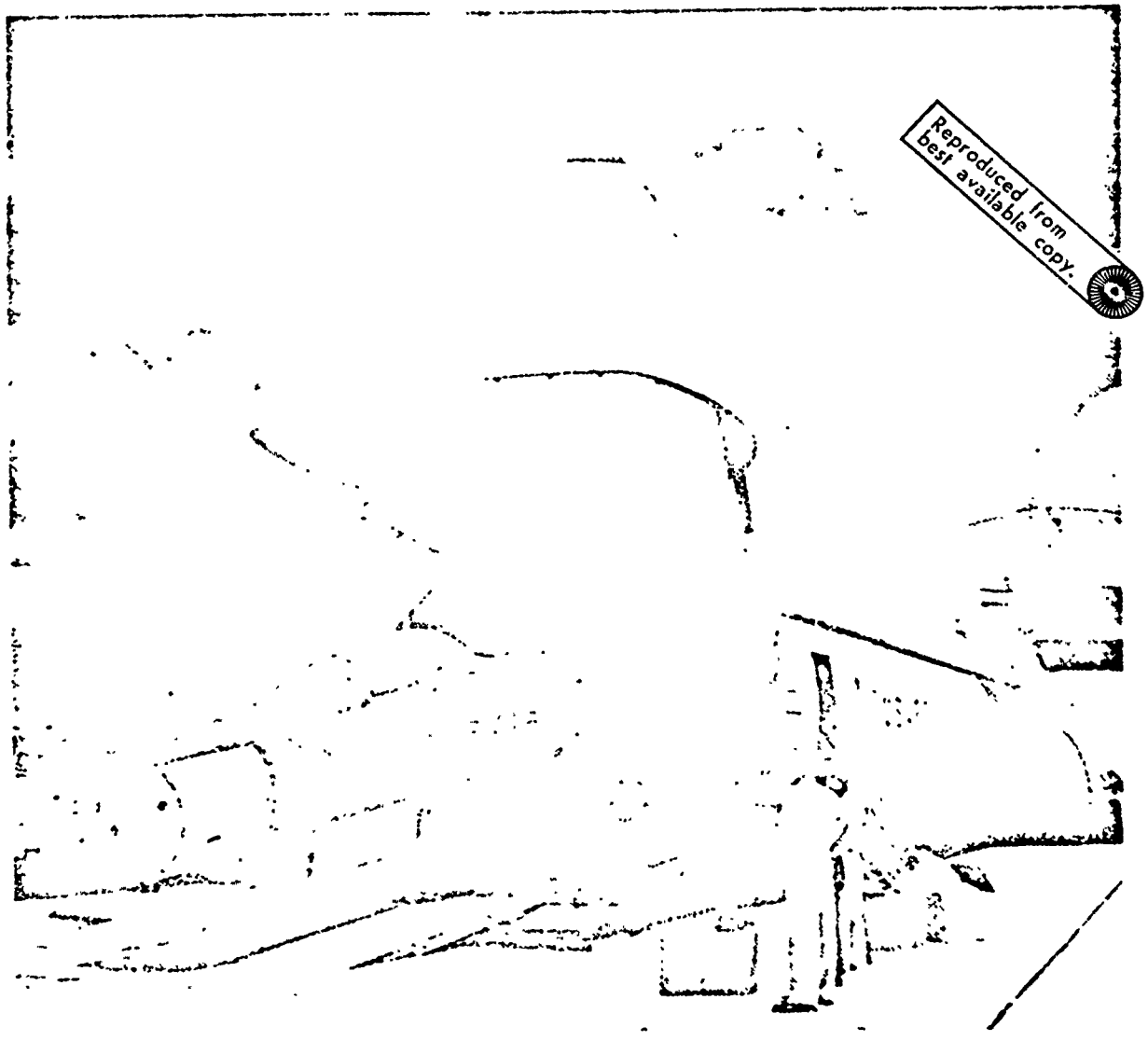

Reproduced from best available copy.

Fig. 2.--C-5A Unloading F-111 (32:53)

Logistics in Motion

Logistics in Motion, an Army concept, parallels the closed-loop maintenance concept. Under the closed-loop maintenance system, a repaired weapon system or a component is furnished from a depot located in the CONUS before a weapon system is returned from overseas for repairs.

The maintenance personnel deploying with the tactical unit under this streamlined system would perform only organizational and a small amount of intermediate maintenance, including routine inspections and minor repairs which could be accomplished under a removal-and-replacement concept.

The Logistics in Motion concept complements this maintenance concept and also operates on a closed-loop arrangement. The outbound aircraft will carry serviceable supplies and return with repairables. The airlift will operate on a daily basis from depots in the Continental United States (CONUS) to overseas break-bulk points, with total order shipping time estimated at five days.

This system will permit careful management of supplies by eliminating the majority of intermediate supply distribution points such as those in the communications zone, the Army field depot, the general support unit, and

some of the direct support units required under the present system.

Under the present system, each support unit retains an on-hand level of supplies to meet requisitions on a timely basis. Behind this level of supplies is a pipeline of supplies unavailable for immediate use.

The Logistics in Motion system envisions a 15-day level of supplies maintained by each unit in the overseas theatre. This system would permit elimination of the majority of intermediate supply distribution points, shorten the delivery span, and result in the reduction in the total supply inventory of material.

The ability to airlift large intermodal containers on wide-bodied freighters would provide an economical method to handle expeditiously the many thousands of individual supply items. Containerization can be accomplished at the depot by the shipper.

Containerization would reduce the need for sorting in the overseas installations. By filling the containers at the source, costs of repackaging and shipping time would be minimized. The containers would provide protection from damage for the supplies while enroute, and pilferage and losses would be minimized.

An in-transit control system would be established to provide visibility and control of a shipment from the time a requisition is processed until the shipment arrives at its destination overseas--or at a CONUS depot when a repairable item is being returned for overhaul. (52:458)

Authors' Note

Although not fully endorsing the Logistics in Motion concept the authors do believe it has merit, and the concept should be analyzed to determine if it is cost effective. One question that needs to be explored: With the continuous flow, will there be enough compatible supplies for containerization? The question of destination and quantity could make the system cost prohibitive.

Tandem Base Logistic Support

The logistics system can operate in a range of modes--from all surface lines of communication to all air lines of communication. The present system functions near the all surface end of the range. The tandem base, an offshore secure base complex would be the theatre cargo intermodal transfer and storage point. It also would be the site for practically all combat service support functions above the direct support level.

Cargo would be delivered to the tandem base in container vessels and in wide-bodied jet freighters. Tactical airlift would shuttle between the tandem base and forward airfields supporting each division. Supplies, equipment, mail, and incoming personnel would be transported back to the base.

The supply system would be split between the combat zone and the tandem base. Only direct support supply and miscellaneous service units would be in the combat zone.

The permissive environment of the tandem base--out of the combat zone and possessing modern facilities--allows for duplicating the efficiencies of the continental United States (CONUS) supply system. Expertise in depot operations could be brought to the base more easily than in a combat zone.

Rapid replacement of the break-bulk merchant fleet with container vessels (few of which are self-sustaining) require facilities not found in most potential conflict areas. For instance, in Vietnam it took several years to develop facilities adequate enough to handle break-bulk ships. By the late 1970s, the great majority of the nation's merchant fleet will require terminals with sophisticated cargo handling facilities. (43:15)

The tandem base mode makes use, therefore, of the modern commercial sea and air fleets and would provide compatible terminal facilities that could be run mostly with local nationals. The system uses military equipment and manpower only on those segments of the lines of communication that require specialized capabilities.

Authors' Comment

Tandem base assumes that warfare will not advance beyond limited International Warfare.

The tandem base concept was initially designed for the C-5A aircraft which would be the tactical aircraft operating between the tandem base and the battlefront. The C-5A, however, has recently been declared a national resource and is no longer programmed for tactical deployment. The concept, however, is still worth consideration. What is needed is tactical airlift capable of hauling outsized cargo. Tactical airlift for the 1970s and 1980s is beyond the scope of this thesis; but would be an excellent topic for someone to thoroughly explore.

Synthesizing

It is not an easy task to forecast cargo demands for the subsequent decade; however, the demands for airlift do not appear to be as "rosy" as most planners had predicted

five years ago. Unfortunately, the pessimism permeating the air transport industry today is further eroding the confidence in the air freight industry for both shipper and buyer. As pointed out earlier, the airlift capability of both MAC and CRAF far exceeds the present volume of air cargo and the prospects for a brighter future do not look good.

Both antagonists insist that each should be moving the cargo which can be airlifted. The key questions which need to be analyzed are: (1) the feasibility of CRAF supplementing MAC, and (2) the possible alternatives for strategic airlift.

The following sections will analyze in depth the potential strengths and weaknesses of both parties.

CHAPTER III

COMPARISON OF CRAF AND MAC

CRAF

In essence, CRAF is a number of U.S. civil aircraft which have been specifically identified to help satisfy DOD emergency airlift requirements, that can be moved by civil aircraft and aircrews, and which exceed the available capacity of the MAC force. DOD determines what civil aircraft are needed and submits this information to the Department of Transportation (DOT). DOT then formally assigns the aircraft to CRAF. Use of CRAF aircraft is based on contractual arrangements between MAC and the carrier. The government pays for services rendered by the carrier. MAC peacetime contract airlift service is procured from air carriers participating in the CRAF program. (64)

The major and most critical role of the CRAF is to replace the long-range military strategic airlift capability withdrawn from world-wide logistics airlift operations, when the military airlift is needed to support the emergency. (63)

As stated earlier, the primary objective of this thesis is to determine if CRAF will have the capability to supplement MAC during general war or limited war in the 1970s and 1980s.

This chapter will be divided into two sections: one comparing the physical characteristics of the commercial and the military transport aircraft and analyzing a cost comparison of the military and civilian operation. The options available during the 1970 to 1980 time frame will depend on these variables.

Prior to a study of the physical characteristics it must be realized that the military and civilian aircraft have been designed for different mission and purpose. The C-5, C-141, C-130 were designed to be responsive to the special wartime needs of military operations; i.e., large cube, fast loading and unloading, unimproved landing field capability, etc. The 747F, 747C, DC10 were designed for efficiency of operation at the lowest cost. DC-8 and 720C are modified versions of passenger aircraft and also are designed to optimize economy of operation.

For comparison of cargo capabilities of civilian and military aircraft the reader should turn to Appendix A.

To study adequately the airlift potential of CRAF, the authors concentrated their efforts on the jumbo jets, specifically the Boeing 747F/C. In this chapter, the jumbo jets are compared to the C-141 and to the C-5. The authors are particularly interested in the capability of the jumbo jet, to determine if CRAF is truly an asset to the Defense Department. Over the past twenty years, much has been written about the need for CRAF. Present policy has not deterred from this thinking even though the MAC fleet in terms of airlift potential has grown astronomically in the last decade. Due to the complexity of computing cost data, a special chapter has been devoted to a cost comparison between the C-5 and the 747.

Mechanical/Schedule Reliability

The definition and scope of reliability will vary somewhat with the operator. The Boeing Company's definition of mechanical schedule reliability is "the probability of starting and completing 3.5 hour scheduled revenue flights without an interruption chargeable to an aircraft system or component primary function (not secondary or consequential) involving cancellations, turnbacks, diverted landings or delays greater than 15 minutes." (86:4)

Ground Rules

1. Only one interruption is chargeable against a scheduled departure for malfunctioning equipment . . . at the time and place of origin; however, one or more items can contribute to a single interruption.

2. No charge is made against the airplane when another aircraft is substituted for a flight segment if no schedule interruption occurs. When a delay, turnback, or diverted landing occurs with the substituted aircraft, it is charged against the original airplane malfunction.

3. A cancellation is charged against the airplane only when the flight segment, or when the first segment of a series, for which it was scheduled does not occur.

4. When a malfunction causes a flight cancellation, an air turnback, or a diverted landing after the departure has already had a delay, the more serious interruption is charged.

5. Chargeable mechanical schedule interruptions per 100 scheduled departures establish the interruption rate in percent. (86:4)

For relaibility and utilization rates for the B-747B, the reader should see Appendix B.

At present only one 747F is operational. It was delivered to Lufthansa German Airlines on March 10, 1972 and has been in service between Frankfurt, Germany and Kennedy Airport, New York, since April 19, 1972.

One significant fact in this initial operation is that no specialized 747 freighter loading equipment was available at JFK during the first nine weeks of operation. Using existing cargo loading equipment this aircraft has

averaged 66.5 tons per trip. (129:2)

Utilization

Six round trips/week. The average utilization is 13.85 hours/day.

	Westbound	Eastbound
First Week	142,600	132,500
Second Week	141,880	143,910

Fig. 3.--Average Gross Payload (129:6)

Reliability

During the first four weeks of operation there had been one delay in 24 flights for an engine igniter.

There were no scheduled delays charged to the cargo system.

Physical Characteristics

The 747F(See Figur 4) has the capability to carry a variety of military vehicles. Boeing reports that the aircraft can carry approximately 85 percent of the vehicles in an Army division. (130:28) Boeing, with the aid of the Army at Fort Lewis, Washington, has practiced loading Army equipment on a 747C. Boeing reported that one 747F can carry 10 two and one-half ton trucks and 15 jeeps in one

MILITARY FREIGHTER

Figure 4 (130:29)

load. (130:30)

For additional physical characteristics of the 747F and comparisons with the C-5A, see Appendix C.

Turn-Around Time

Boeing believes the projected turn-around time for a 747F can be accomplished within one hour with proper utilization of ground handling and service equipment. The turn-around time is based on loading and unloading a payload of 220,000 pounds. (87:58)

The operation by Lufthansa as noted earlier does not support Boeing's claim as they have been averaging two and one-half hours per turn-around. The Lufthansa operation, however, has not been using the special cargo offloading equipment as envisioned by Boeing.

Ground Handling Equipment

The 747F/C requires a loader with a 17 foot lift capability. At present there are no loaders in the existing Air Force inventory that can accommodate the 747F/C. (64)

The cost of modifying present Air Force ground equipment is substantial.

In 1970 Boeing investigated the possible cost of modifying loaders with the following findings:

1. The Air Force could modify their existing inventory of 40 K-loaders with an additional 4 foot lift height for approximately $30,000 each.

2. The builder of the 40 K-loaders has offered a similar 55 K-loader with an alternate 17 foot lift height. Design and development cost would be in the range of $120,000 to $140,000. Follow-on procurement of these loaders would cost about $100,000 each.

3. Aerolift Corporation of Seattle will build a 22 K-loader with a lift elevation of 22 feet. The platform is 8 1/2 feet wide by 20 feet long. The price is $48,000; however, it would have to be modified for weight and length. (126:12)

The Army Corps of Engineers at Fort Lewis, Washington has suggested some field expedient measures utilizing commonly available material. (Figure 5). These methods would be alternatives for austere or overseas base operations. Would the government or the carrier be responsible for the purchase and maintenance of specialized equipment to support CRAF aircraft?

Philip Whitaker, Assistant Secretary of the Air Force, responding to a question raised by a member of the Committee on Armed Services said:

> The report suggested that Air Force plans for the 55K-loader be modified to provide a capacity to load and unload commercial wide-bodied aircraft. The 55K-loader development program has been terminated, as it was determined in the test program that the improved 40K-loader fulfills the Air Force mobile loader requirements at less overall cost. It is Air Force policy not to procure specialized equipment to support CRAF aircraft. The current commercial airlift contract has a provision that requires the carriers to furnish peculiar Ground Support Equipment (GSE), and it is anticipated that

FIELD EXPEDIENTS

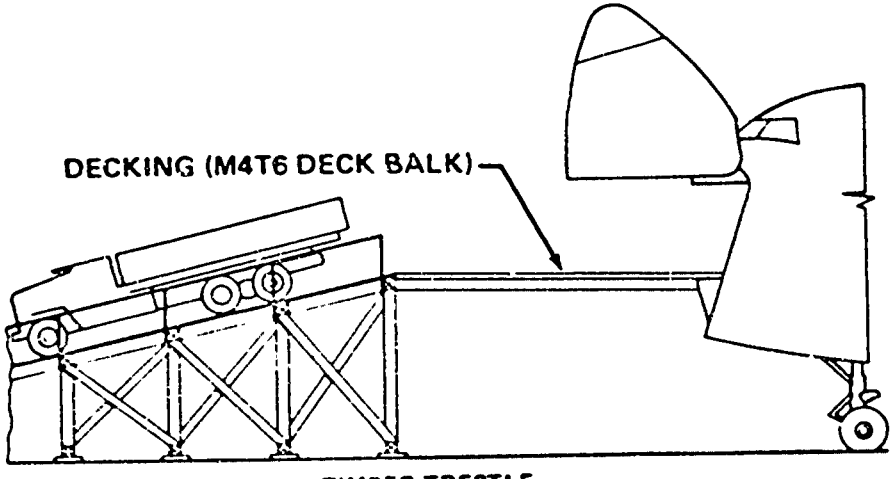

TIMBER TRESTLE

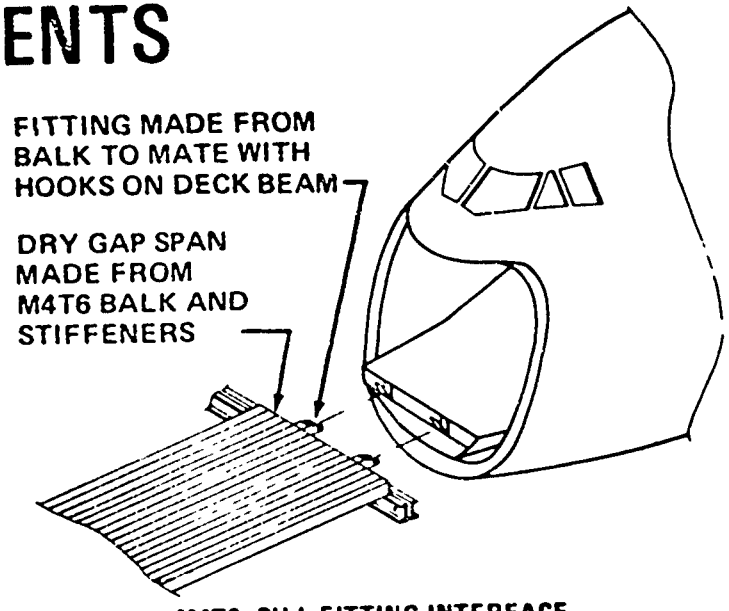

M4T6–SILL FITTING INTERFACE

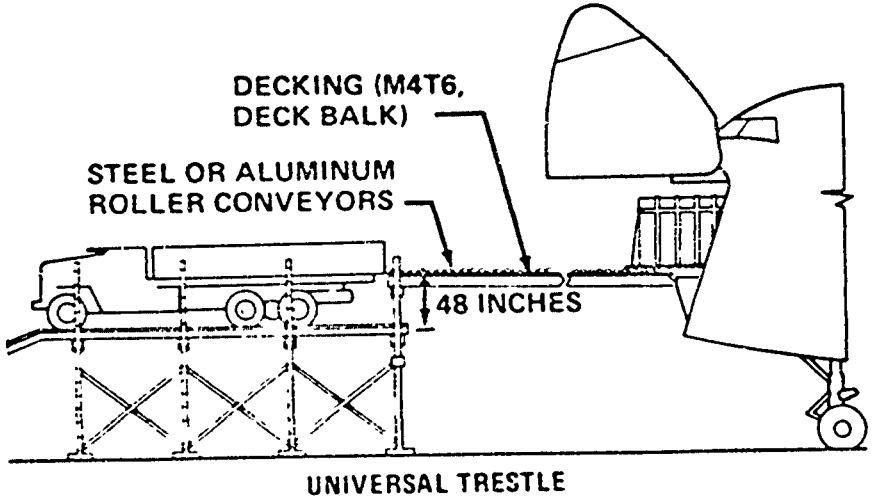

UNIVERSAL TRESTLE

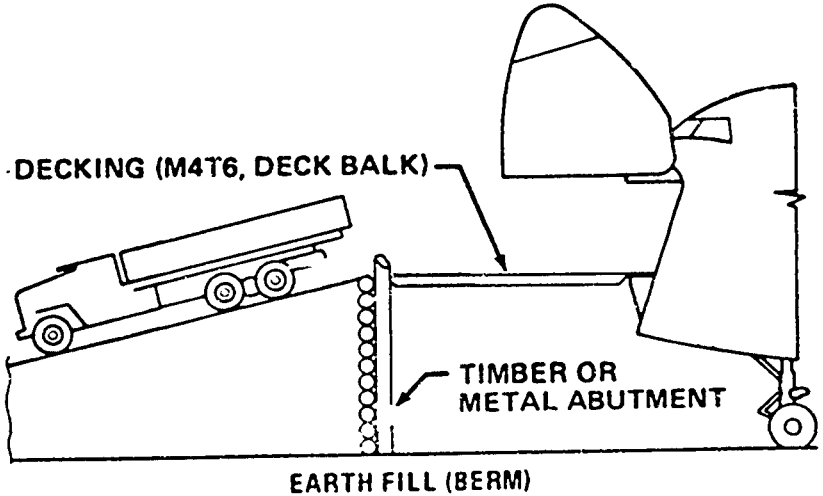

EARTH FILL (BERM)

CONCEPTS COURTESY OF 869TH ENGR BN (CONSTR) FT LEWIS, WASHINGTON

Figure 5

(130:41)

> this provision will be included in future airlift contracts. Although the carriers do not currently have the GSE for the convertible and cargo wide-bodied jets, it is reasonable to expect that they will have the necessary assets by the time these aircraft enter active service. The carrier-owned peculiar equipment can be relocated to support MAC airlift augmentation requirements, as required. In addition, the Air Force engineering analysis indicates that it would not be feasible to modify the 55K or 40K aircraft loaders to reach the 17-foot deck height of the B-747 aircraft. (126:16)

Boeing believes that "a fixed dock with a mechanized roller system and a loading bridge to match aircraft altitude would provide the most efficient operation." (104)

Alternatives are:

1. Two loaders operating in tandem with the front loader mounted on a five-foot platform adapter.

2. A new, or modified mobile loader capable of lifting to 18 feet.

3. A ramp that loaders and transporters could operate on that would enable them to reach the main deck.

4. An on-board (self-contained) loader.

5. Heavy-lift, high-lift forklifts equipped with roller pallets to receive the load units.

Boeing estimates the construction costs of a fixed dock--excluding terminal facilities such as storage,

offices, truck depots, etc., to be $100,000. (126:32)

Tiedown Capabilities

The cargo floor has a weight limitation of 100 pounds per square foot. Boeing, however, reports that the floor strength can be quadrupled with an inexpensive, "homemade" modification. Two layers of standard 4 x 8 foot plywood panels, one inch thick, will increase the floor strength to 400 pounds per square foot. (104)

Figure 6 displays the cargo/vehicle tiedown capabilities of the 747C/F.

For additional information on cargo handling, pallets and containers, the reader should see Appendix D.

The DC-10-30C is a side-loading, convertible aircraft that will carry 310 troops or, in its cargo configuration, 78.4 tons. Its block speed is 460K over a critical leg of 3300 NM. Its main cabin floor is 17'1" off the ground. When loaded it will carry thirty 463L pallets in two rows of 15 each. When transporting troops and their baggage, there is no additional cargo capacity. The side access door is 102" high and 140" wide. The 463L pallets must be contoured to 88" high to accommodate to the interior of the cabin. (73:6303) See Appendix E for DC-10 cargo arrangement.

CARGO/VEHICLE TIEDOWN CAPABILITY
(SEAT TRACK PROVISION)

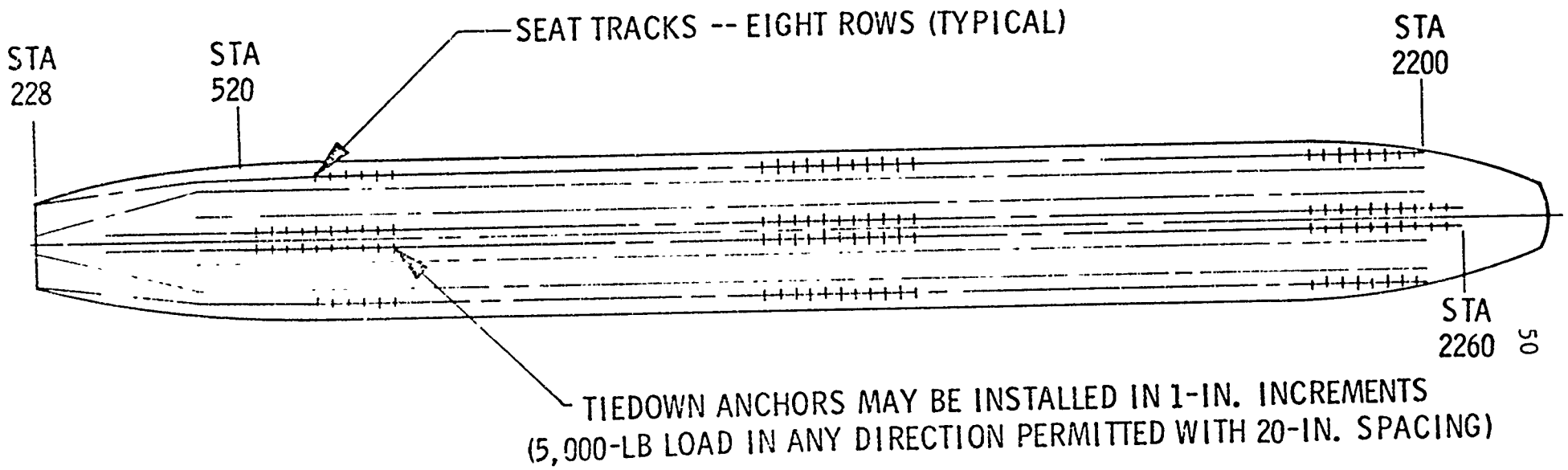

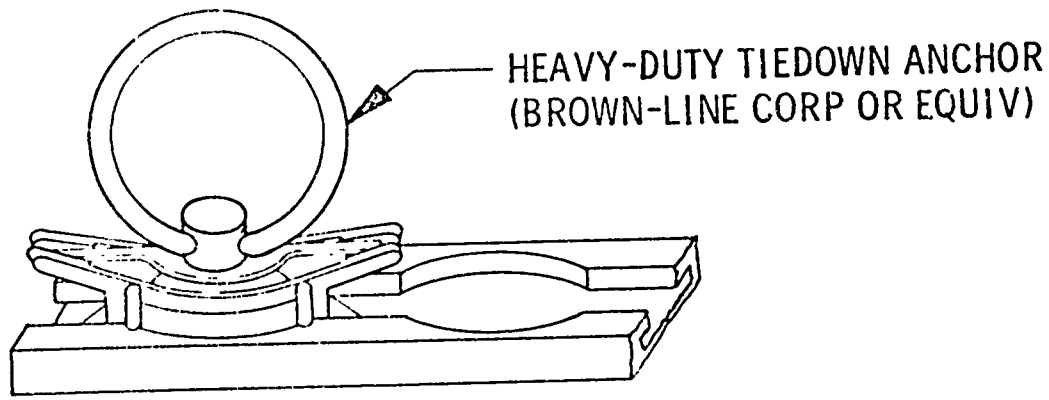

Figure 6 (126:40)

MAC

The Military Airlift Command (MAC) is a major command of the United States Air Force and is the executive operating agent for the Secretary of the Air Force. The Secretary of the Air Force is the Department of Defense (DOD) Single Manager for Airlift Service.

MAC's primary mission "is to provide the airlift necessary for the wartime deployment of balanced forces. The mission can be divided into three parts: first, to be trained and ready to deploy--and employ on very short notice if necessary--air and ground fighting forces of the DOD anywhere in the world; second, to augment the airlift capability of Air Force component commanders of unified commands; and third, to provide sustaining logistical support to those fighting forces." (83:5)

By the end of Fiscal Year 1973, the command's force structure will consist of 70 UE, C-5A and 234 UE C-141. These aircraft, according to DOD planners, will be the muscle of our strategic airlift force through the 1980s. (73:6246)

The C-141 has proven to be a valuable asset to the military. Its maintainability and reliability during the past six years has been widely acknowledged by both military

and congressional leaders. Before the phasedown of the Vietnam conflict the utilization rate of the C-141 was 10 hours per day. This aircraft proved to be quite versatile operating as passenger, cargo and aero-medical evacuation missions. This thesis will not elaborate further on the capabilities of the C-141 except to acknowledge that it has represented the "backbone" of the MAC fleet since 1966. For the future it will continue to play a major role for strategic airlift. (80:11) The authors, instead, will direct their attention towards the latest and most controversial aircraft to enter the Air Force inventory, the C-5A. (Figure 7). It is not the intent of the authors to either defend or criticize the C-5A. The purpose of this thesis will be to analyze the aircraft's contribution to strategic airlift and to compare it with the Boeing 747.

Moreover, there are several other considerations:

(1) 36 standard 88" x 108" pallets can be carried with two rows of 16 each on the main floor and two each on the ramp. (92:5)

(2) 304 tiedown rings, each with a 25,000 pound load limit are spaced at approximately 40" intervals in the cargo floor and the ramp. (92:3)

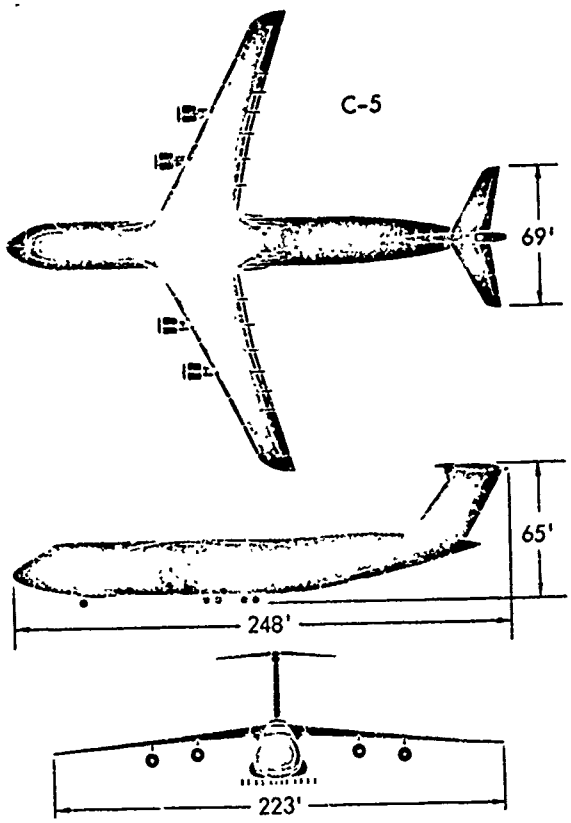

Power Plants (Each Engine)	41,100 Lbs. of Thrust
Cruise Speed	440 Kts.
Aerial Delivery	130 Kts.
Design Payload (Peacetime)	220,000 Lbs.
Includes 9000 Lb Troop Kit	
Range with Design Payload	3050 N.M.
(MIL-C-5011A)	
Fuel Capacity	318,500 Lbs.
Main Landing Gear	
Number of Wheels	24
Foot Print Area	5280 Sq. In.
Cargo Compartment	
Length (Including Ramps)	144.6 Ft.
Height	13.5 Ft.
Width	19.0 Ft.
Maximum Takeoff Weight	
Peacetime	728,000 Lbs.
Wartime	769,000 Lbs.

Fig. 7.--General Characteristics

(3) The C-5A has a weight-bearing capacity of 300 pounds per square foot regardless of type of load, palletized cargo, bulk floor cargo, or wheeled vehicles. (4:1-7)

(4) The C-5A will accommodate 75 paratroopers in the upper aft of the wing in addition to carrying the normal cargo configuration. (92:4)

(5) The C-5A is equipped to air drop unit loads of 50,000 pounds. (Figure 8).

Admittedly, the C-5A was originally designed to stretch the strategic pipeline from the depot to the battlefield. It was built to land on dirt strips at forward operating bases. Unfortunately, the aircraft was not able to perform this mission as first envisioned. High cost and structural problems have forced the defense planners to recognize the aircraft for what it really is, the only existing outsize cargo aircraft for strategic airlift. It is not a tactical aircraft and now is not programmed to be used in that capacity. In other words, for future contingencies, the reader should think of the C-5A as a strategic and not a tactical weapon system, thus the authors' desires to compare the aircraft to the B-747C/F. Even though the C-5A will not perform a tactical mission, the authors do not necessarily believe that this is a severe deficiency in the weapon

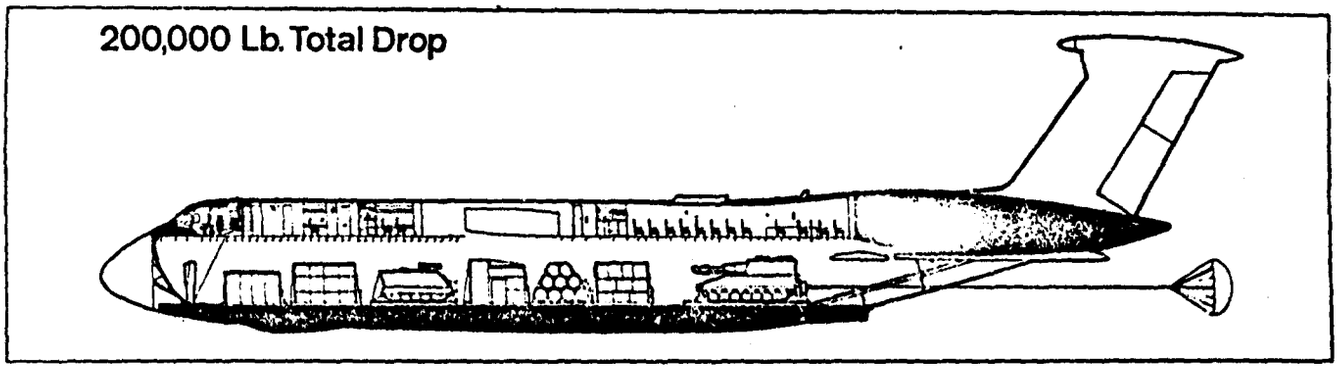

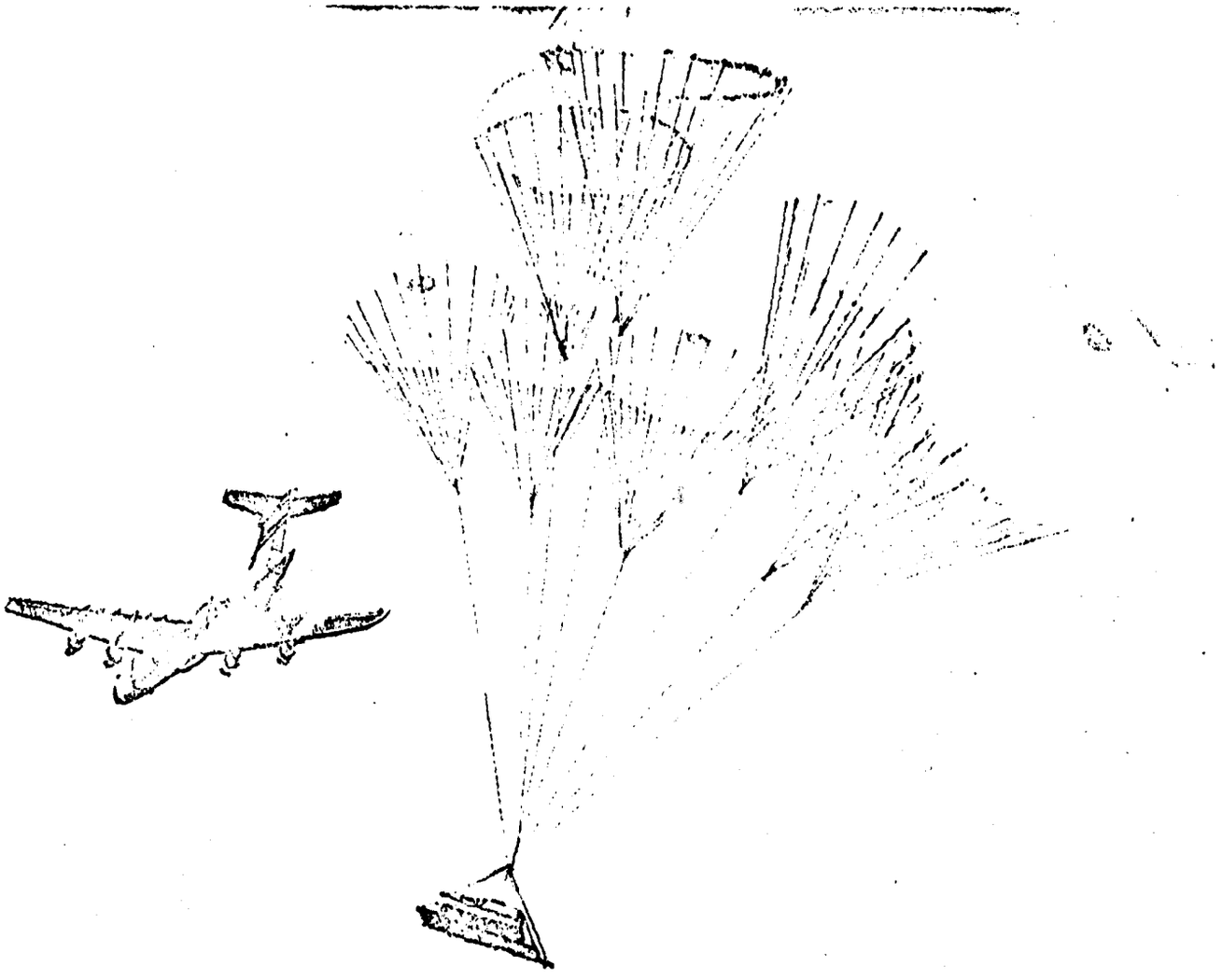

50,000 Lb.
Single Pallet

Figure 8

Reproduced from best available copy.

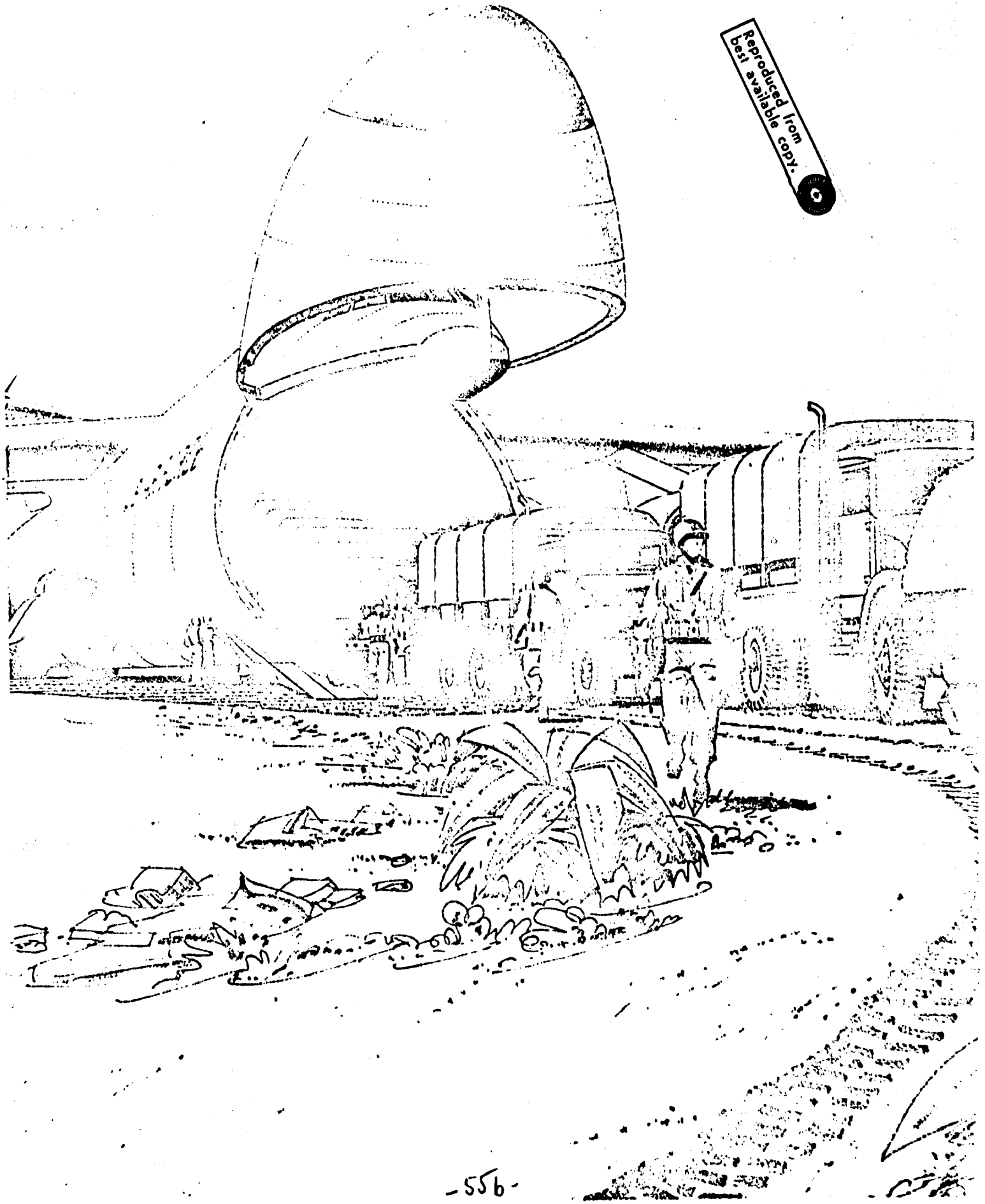

system. In the opinion of the authors, the initial concept of sending a $37 million plus aircraft into an unprepared landing strip was illogical and "foolhardy." Even though the aircraft will not deploy to forward operating bases, the C-5A has retained some desirable characteristics from the tactical concept.

Landing Gear-Kneeling

In the fully kneeled position, the main deck can be inclined so that the forward end of the deck is lowered to 59" above the ground. The lower ramp ends and extensions can be lowered to ground level for ground loading and to intermediate levels for truck bed loading. (Figure 9).

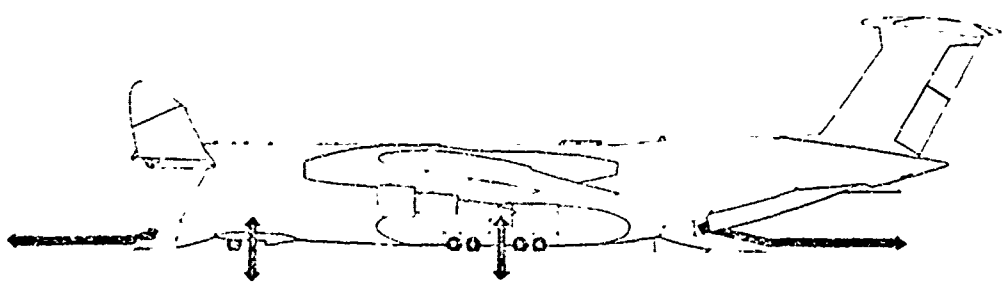

(4:1-14)

Fig. 9--Kneeling and Cargo Floor Positioning

Air Transportable Dock

This dock can be carried by two C-5As. It measures 296' x 63'. At present there are only three docks in existence. Lockheed reports that the dock can be easily assembled by 75 men within 12 hours. The advantage of the dock is that it allows cargo to be rapidly prepositioned for loading and offloading (Figure 10). (4:3-7)

Table 3 shows the comparison runway concrete thickness requirements for large jet aircraft.

TABLE 3

RUNWAY RESTRICTIONS

Airplane	Concrete Thickness (inches)
707	12.5
747	13.0
DC-8	12.5
KC-135A	10.5
B-52	20.0
C-141A	12.0
C-5A	10.0

(4:5-11)

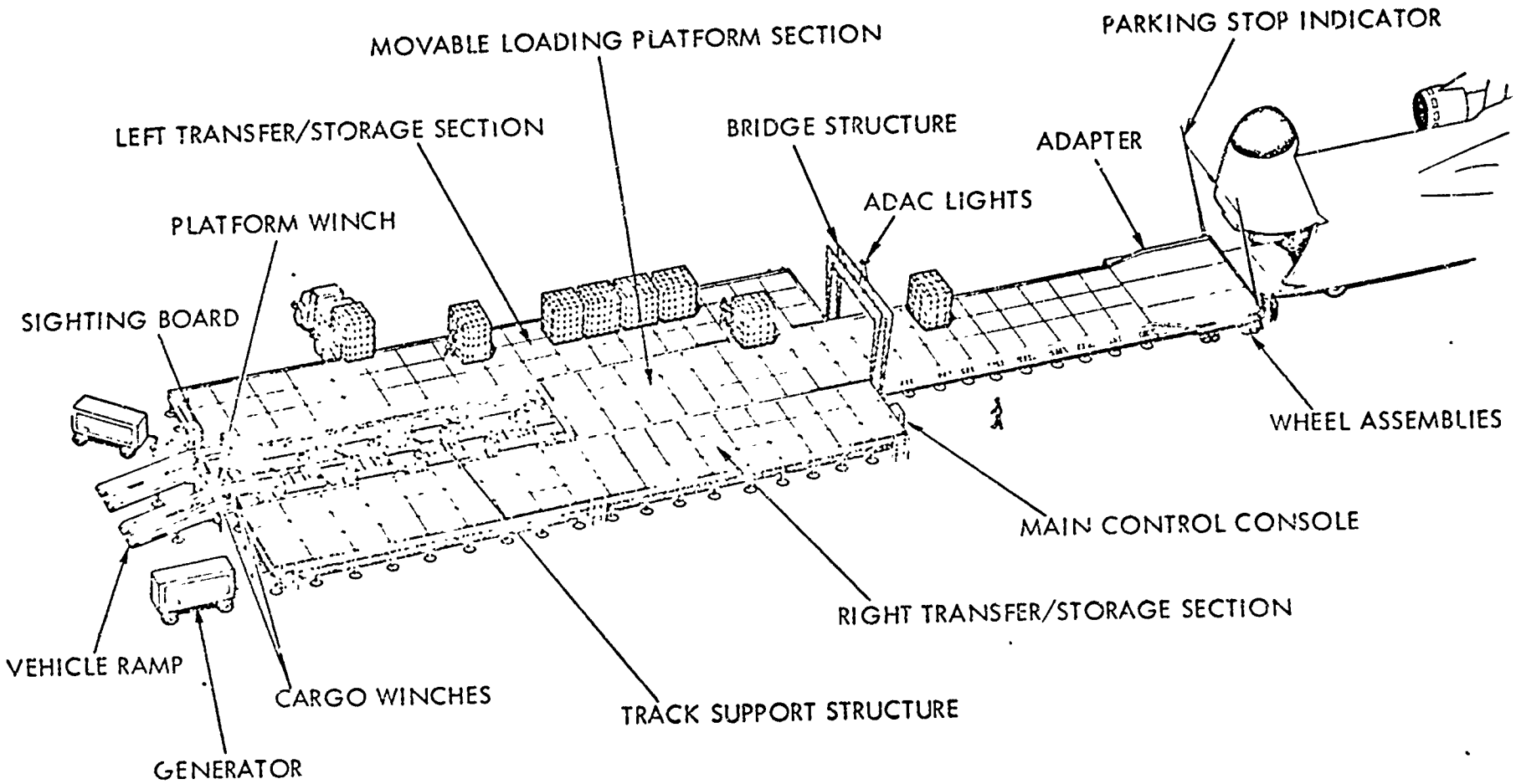

FIGURE 10-AIR TRANSPORTABLE DOCK

(4:3-8)

Figure 10

As mentioned before, the C-5A is the only aircraft capable of carrying outsized cargo. In keeping with the "Nixon Doctrine" of "flexible response" to fight "one and one-half wars," the authors believe that this characteristic is very important.

The following statistics were obtained from General Stilwell's testimony to a congressional committee in January, 1970.

These figures show the amount of outsize cargo within the different Army divisions. The C-5A, according to General Stilwell, is able to carry all the cargo.

Airborne Division--42 items outsize to the C-141. These items represent 3.7 percent of the total weight.

Armored Division--1161 items outsize to the C-141; 43 percent of the division's equipment weight.

Air Mobile Division--238 items outsize to C-141; 15.1 percent of division tonnage.

Infantry Division--452 items outsize to C-141; 23 percent of the total divisional weight of equipment.

Mechanized Infantry Division--1061 items outsize to C-141; 37.3 percent of total division tonnage. (73:6435)

The outsize cargo mentioned above is also applicable to the 747C/F since the height of its door opening

is 11" shorter than the C-141. (See Figure 11).

Figures 12 and 13 portray the C-5A's capability to airlift U.S. Army equipment.

Reliability and Maintainability

As mentioned earlier, much has been written about the number of discrepancies on the C-5A. Without belaboring the point, the latest GAO report has indicated that the operational life of the aircraft is expected to be 7500 hours and not 30,000 hours as predicted. This reduction in hours is substantial and can not be taken lightly considering the cost of each aircraft. MAC is taking steps to improve the condition by placing restrictions on how the aircraft will be flown. Each aircraft will not exceed 800 hours per year. The utilization rate based on this information will fall to 2.2 hours per day which is far below what MAC had initially programmed which was 4.5 hours per day. (56)

MAC hopes by protecting the aircraft it will improve the life expectancy to 20,000 hours. If MAC were to get 14,000 hours from each aircraft at 800 hours per year it would have the service of the C-5A for 17.5 years which is approximately what MAC expected for 30,000 hours at 4.5 hours per day. The impact of decreased operational

747F Air-Transportability Summary

CARGO DOOR COMPARISON

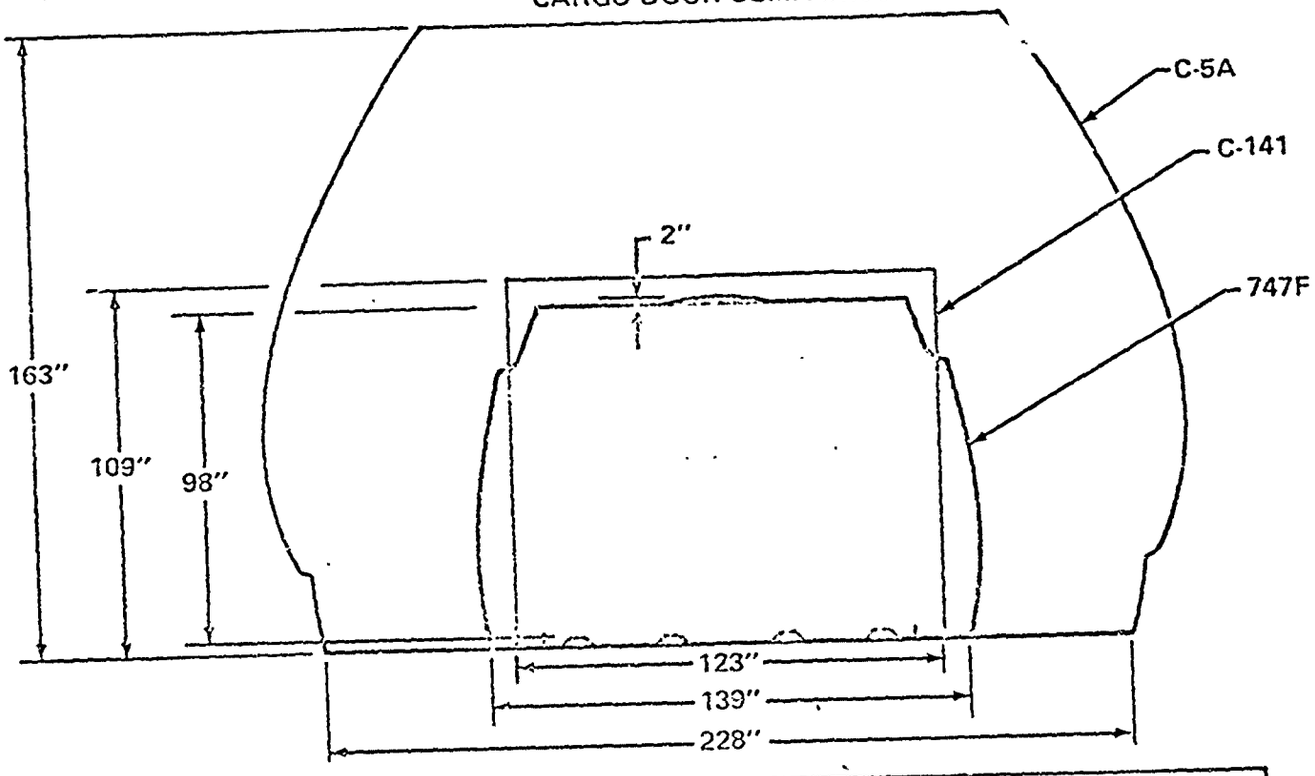

DIVISION FORCE	TOTAL VEHICLES	% AIR-TRANSPORTABLE			
		747F	C-141	C-5A	DC-10
ARMD DIV. + ISI & SSI	18,821	81	83	99	71 % of Army equipment items
INF. DIV. + ISI & SSI	23,320	88	92	99	
MECH. DIV. + ISI & SSI	18,560	82	89	99	

Figure 11

(126:19)

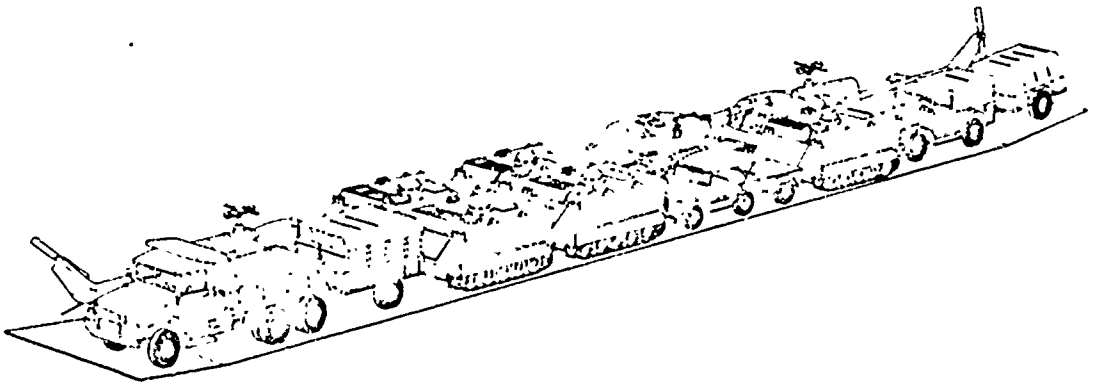

Two UH-1D Helicopters, One M60 Main Battle Tank. Five M113 Armored Personnel Carriers. One M59 2-1/2 Ton Truck w/Trailer, One M151 1/4-Ton Truck w/ Trailer, One M-37 3/4 Ton Truck w/Trailer.

Figure 12 (4:22)

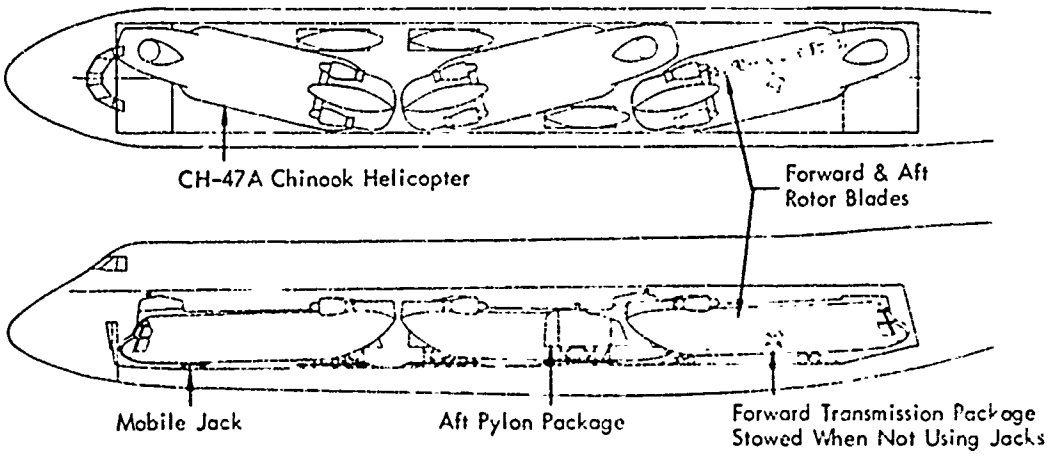

Figure 13 (4:23)

utilization will have a profound impact on defense planners as discussed in the next chapter.

The mechanical/scheduled reliability ground rules for the Boeing 747 are also applicable to the C-5A aircraft. (56)

Table 4 represents the abort criteria as well as the major subsystem failures (MSF) and projections for 1974. These data are cumulative from June, 1970 when the C-5A first became operational in MAC.

For additional information on MSF data, the reader should see Appendix G which graphically depicts failures for each specific major subsystem.

The C-5A has been under close scrutiny from the General Accounting Office and congressional leaders. Many of these men have been quite vocal in expressing their displeasure over rising costs and major system failures. The GAO in April, 1972 released a negative report on a group of 12 C-5A aircraft assigned to Charleston Air Force Base, South Carolina. These aircraft required a total of 36.34 manhours of maintenance for each hour of flight during an eight-month period ending August 31, 1971. This figure exceeds the specified rate of 17.65 manhours. The same report also stated that for a nine-month period ending in

TABLE 4

C-5A RELIABILITY GROWTH POTENTIAL

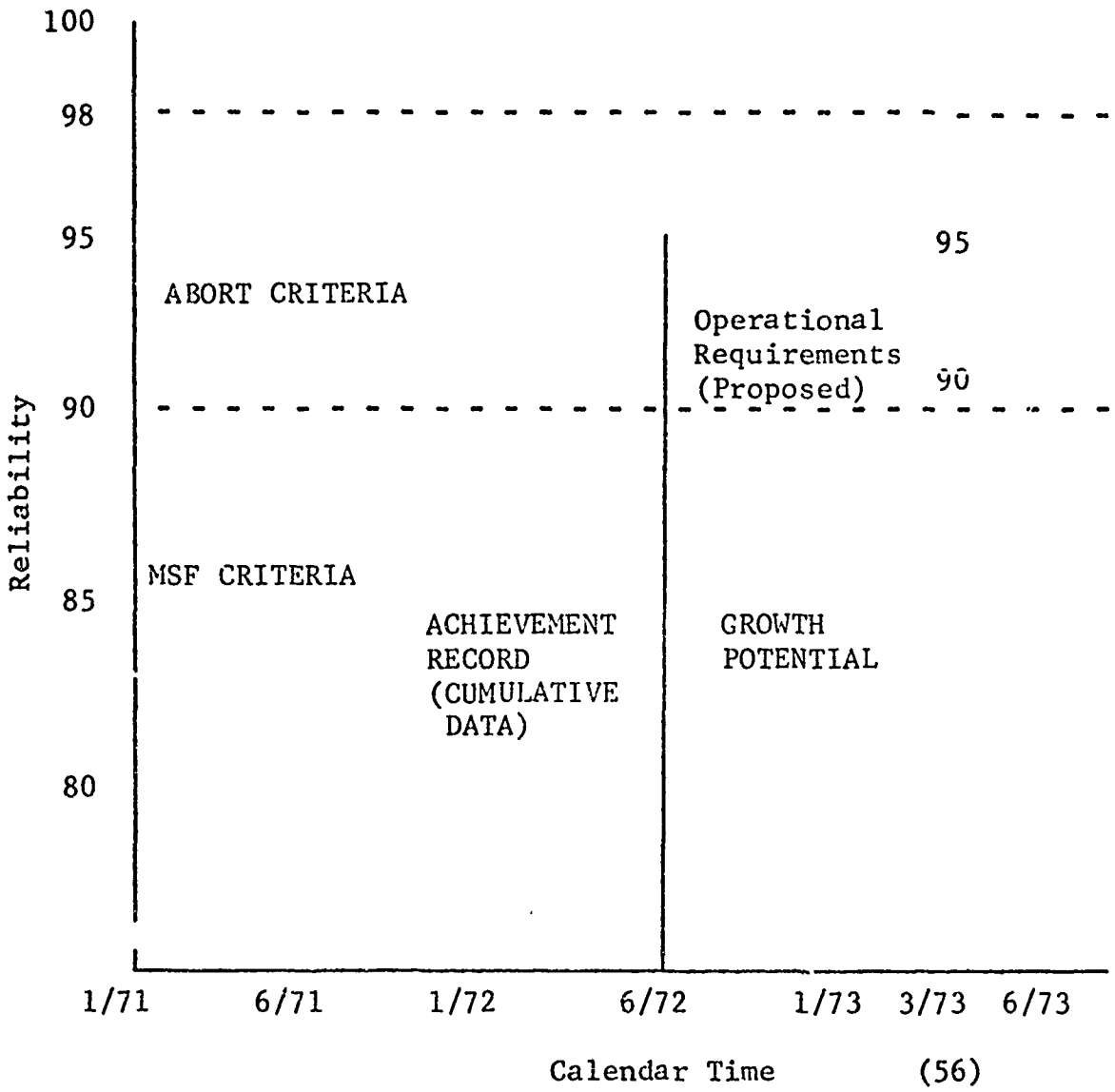

September 30, 1971, the aircraft were operationally ready 47 percent of the time compared to the specified objective of 75 percent. (56)

For the entire C-5A fleet for a six month period ending August 31, 1971 there were 3,327 failures involving the landing gear. The GAO report stated that the landing gear had the poorest reliability rate of any major system in the aircraft averaging one malfunction for every four hours.

Wing cracks, excessive wing loads while maneuvering at high speeds, kneeling problems and basic structural weakness have been the major problems. Without question the C-5A has had numerous problems and has fallen short of the predicted reliability objectives. (73:6717)

In the judgment of the authors, the value of the aircraft to the overall defense posture should not be predicated on abnormal reliability figures for the first two years of operation. Even with its maintenance problems, all the individuals that the authors interviewed at MAC Headquarters were very enthusiastic over the operational capabilities of the C-5A. As mentioned earlier, it is the only aircraft which has the capability to deliver outsized cargo. In order for the rapid, mobile deployment concept

to work this aircraft, in the opinion of the authors, will be the "backbone" of strategic airlift for the 1970s and 1980s.

CHAPTER IV

CAPABILITIES

The purpose of this chapter is to give the reader a descriptive analysis of MAC's outbound productive capability during normal (peacetime) and contingency (emergency) operation. Of primary interest to the logistics planner is the closure rate, or time to complete the airlift requirement during an emergency. The following mathematical computations portray MAC's airlift capability, and what impact CRAF (747C/F) would have in completing mission requirements.

Contingency Operation

The assumptions made by the authors in computing the figures for the graphs were the following:

1. Army Division

   Total weight: 36,600 tons*
   Deployment distance: 4,000 nautical miles

---

*Mean weight for a force mix of infantry, mechanized infantry and armor in a ratio of 3:1:1. (84:5-8)

Daily Resupply Requirements

Supply Class	Pounds per Day per Man
Class I (Rations)	7.4
Class II & IV (Spare Parts)	17.8
Class V (Ammunition)	23.4
Total	48.6

Resupply rate: 646 tons per division per day*

2. The deployment and resupply requirements for one Army division are:

Deployment: 36,600 x 4000 = 146,400,000 ton miles

Resupply: 646 x 4000 = 2,584,000 ton miles per day

The average daily resupply requirement is approximated by assuming that the deployment of N divisions over D days represents an average 1/2 N divisions present throughout the D days.** For a deployment of N divisions, the average daily resupply is:

---

*Resupply is based upon an accelerated consumption rate through the deployment, 50 percent greater than normal. Thus, 1.5 x 48.6 lbs per man per day x 17,730 troops per division = 646 tons per division per day. In most cases, petroleum products will be obtained from sources other than strategic airlift. (98:33)

**This method of approximating the average daily resupply requirement is valid only when the number of divisions deployed is less than the total number which can be resupplied by using the entire fleet. In that range, however, it yields a realistic resupply amount during the first

1/2 N x 2,584,000 = 1,292,000 x N ton miles per day

3. C-5A

Block speed:	409 knots
Payload:	75.6 tons
Ton Mile Factor:	(409 x 75.6) = 30920 ton miles
Utilization:	0-10 hrs per day
Airframes:	70

4. C-141

Block speed:	409 knots
Payload:	31 tons
Ton mile factor:	(409 x 21) = 8589 ton miles
Utilization:	0-10 hrs per day
Airframes:	234

5. Boeing 747C/F(CRAF)

Block speed:	480 knots
Payload:	71.2 (129:6)
Ton mile factor:	(480 x 71.2) = 34,176 ton miles
Utilization:	10 hrs per day
Airframes:	Variable

6. Douglas DC-10-30CF (convertible)

Block speed:	480 knots
Payload:	75.8 tons
Ton mile factor:	(480 x 75.8) = 36,384 ton miles
Utilization:	10 hrs per day
Airframes:	Variable

DC-10 to 747 C/F equivalent: 1* aircraft

---

half of the deployment as the resupply rate is considerably in excess of consumption. In effect, there is a surplus, or buildup of supplies in advance of the second half of the deployment.

*The DC-10-30CF has limited oversize cargo capacity. This aircraft is side-loaded with 102 x 140 inch entrance accepting a maximum length of 214 inches. For this study, the tonnage capabilities of the 747C/F and DC-10 will be assumed to be equal.

7. Douglas DC-8

Block speed:	455 knots
Payload:	34.4 tons
Ton mile factor:	(455 x 34.4) = 15,562 ton miles
Utilization:	10 hrs per day
Airframes:	Variable

8. Boeing 707

Block speed:	455 knots
Payload:	32.0 tons
Ton mile factor:	(455 x 32.0) = 14,560 ton miles
Utilization:	10 hrs per day
Airframes:	Variable

707 to 747C/F equivalent: $\frac{34,197}{14,560} = 2.35$ aircraft

9. Normal channel traffic requirement was reduced 50 percent.

10. Outbound productivity was 50 percent of total productivity.

11. In computing productive capability, a percentage factor consisting of test, training and ferry (TTF) was deducted from gross capability. The TTF factor used was 11 percent. (3:4)

The following tables illustrates the strategic airlifts' capability to deploy Army divisions during a contingency operation. The purpose for Tables 5, 6 and 7 is to enable the planner to determine MAC's closure time to airlift one, two or three Army divisions for specified utilization rates. Tables 8, 9 and 10 depict the number of 747C/Fs required to augment MAC to airlift a specified number of Army divisions in a desired time frame.

Reproduced from best available copy.

TABLE 5

CONTINGENCY AIRLIFT OF ONE ARMY DIVISION BY MAC

CLOSURE IN DAYS	REQUIRED AIRLIFT MTM	MAC MTM RATE 4 HRS	MAC MTM RATE 6 HRS	MAC MTM RATE 8 HRS	MAC MTM RATE 12 HRS
		MAC DEFICIT OR SURPLUS IN MTM			
8	153.	-139.	-131.	-103.	-110.
9	159.	-139.	-115.	-1[illegible].	-[illegible].
10	166.	-109.	-[illegible].	-77.	-55.
11	173.	-113.	-[illegible].	-54.	-[illegible].
12	179.	-125.	-[illegible].	-31.	6.
13	186.	-97.	-56.	-9.	37.
14	192.	-85.	-36.	16.	68.
15	199.	-[illegible].	-21.	39.	[illegible].
16	206.	-70.	-5.	69.	100.
17	212.	-64.	11.	95.	150.
18	219.	-55.	27.	120.	190.
19	225.	-47.	49.	131.	221.
20	232.	-39.	55.	155.	251.
21	239.	-37.	74.	176.	280.
22	245.	-29.	99.	221.	310.
23	252.	-14.	125.	264.	343.
24	259.	-5.	151.	247.	373.
25	265.	3.	137.	277.	404.
26	271.	11.	150.	293.	435.
27	278.	19.	166.	317.	465.
28	284.	25.	184.	342.	496.
29	291.	30.	199.	363.	526.
30	298.	44.	215.	386.	557.
31	304.	53.	231.	409.	588.
32	311.	61.	247.	439.	618.
33	317.	69.	269.	455.	649.
34	324.	77.	278.	479.	679.
35	332.	86.	294.	519.	710.
36	337.	94.	309.	595.	742.
37	344.	100.	325.	548.	771.

Reproduced from best available copy.

TABLE 6

CONTINGENCY AIRLIFT OF TWO ARMY DIVISIONS BY MAC

CLOSURE IN DAYS	REQUIRED AIRLIFT MTM	MAC UTE RATE 4 HRS	MAC UTE RATE 6 HRS	MAC UTE RATE 8 HRS	MAC UTE RATE 10 HRS
		MAC DEFICIT OR SURPLUS IN MTM			
0	320.	-997.	-[illegible].	-979.	-965.
4	311.	-991.	-967.	-959.	-937.
6	302.	-976.	-953.	-931.	-909.
8	309.	-977.	-945.	-911.	-181.
12	339.	-964.	-907.	-193.	-153.
10	340.	-959.	-914.	-169.	-125.
14	357.	-953.	-921.	-142.	-97.
16	366.	-947.	-158.	-125.	-69.
18	375.	-941.	-175.	-122.	-41.
20	384.	-936.	-161.	-97.	-13.
22	394.	-930.	-149.	-67.	15.
24	403.	-924.	-135.	-46.	43.
26	410.	-919.	-120.	-25.	71.
28	421.	-913.	-179.	-5.	99.
32	439.	-977.	-96.	16.	127.
30	439.	-990.	-83.	36.	155.
34	445.	-196.	-69.	57.	183.
36	452.	-192.	-56.	77.	211.
38	457.	-184.	-43.	99.	239.
42	476.	-179.	-32.	119.	267.
40	485.	-173.	-17.	139.	295.
44	492.	-167.	-4.	160.	323.
46	503.	-159.	9.	187.	351.
48	513.	-156.	28.	271.	379.
52	522.	-152.	36.	201.	407.
50	531.	-144.	49.	249.	435.
54	542.	-139.	69.	269.	463.
56	549.	-133.	79.	283.	491.
58	552.	-127.	88.	324.	519.
60	567.	-120.	121.	364.	547.

Reproduced from best available copy.

TABLE 7

CONTINGENCY AIRLIFT OF THREE ARMY DIVISIONS BY MAC

CLOSURE IN DAYS	REQUIRED AIRLIFT MTM	MAC WTD PATT 4 MPS	MAC WTD PATT 6 MPS	MAC WTD PATT 8 MPS	MAC WTD PATT 12 MPS
		MAC DEFICIT OR SURPLUS IN MTM			
2	451.	-436.	-409.	-401.	-414.
4	463.	-433.	-418.	-403.	-372.
6	474.	-437.	-409.	-365.	-373.
8	486.	-407.	-397.	-367.	-339.
10	497.	-404.	-356.	-348.	-319.
12	519.	-409.	-376.	-331.	-287.
14	521.	-417.	-365.	-313.	-261.
16	533.	-414.	-355.	-286.	-236.
18	545.	-411.	-334.	-277.	-212.
20	557.	-407.	-334.	-255.	-165.
22	569.	-405.	-303.	-241.	-127.
24	582.	-409.	-313.	-203.	-134.
26	596.	-399.	-326.	-205.	-128.
28	574.	-396.	-291.	-187.	-83.
32	615.	-398.	-291.	-169.	-56.
30	607.	-359.	-279.	-151.	-33.
34	639.	-376.	-267.	-134.	-7.
36	651.	-373.	-249.	-116.	15.
38	669.	-398.	-239.	-98.	44.
40	674.	-377.	-229.	-79.	69.
42	686.	-374.	-219.	-59.	94.
44	697.	-371.	-207.	-44.	121.
46	729.	-367.	-197.	-26.	145.
48	701.	-364.	-186.	-9.	171.
50	733.	-361.	-175.	12.	196.
52	744.	-358.	-165.	28.	222.
54	754.	-355.	-154.	46.	247.
56	766.	-352.	-144.	64.	270.
58	777.	-349.	-133.	82.	295.
60	791.	-346.	-123.	102.	323.

TABLE 8

CONTINGENCY AIRLIFT OF ONE ARMY DIVISION BY MAC AND CRAF

NUMBER OF DIVISIONS DEPLOYED IS 1

CLOSURE IN DAYS	REQUIRED AIRLIFT MTM	MAC UTE RATE 4 HRS	MAC UTE RATE 6 HRS	MAC UTE RATE 8 HRS	MAC UTE RATE 10 HRS
		747C EQUIVALENTS REQUIRED			
2	153.	430.	407.	384.	361.
4	160.	282.	179.	156.	133.
6	166.	126.	103.	80.	57.
8	173.	88.	65.	42.	19.
10	179.	65.	42.	19.	0.
12	186.	50.	27.	4.	0.
14	192.	39.	16.	0.	0.
16	199.	31.	8.	0.	0.
18	205.	25.	2.	0.	0.
20	212.	20.	0.	0.	0.
22	219.	16.	0.	0.	0.
24	225.	12.	0.	0.	0.
26	232.	9.	0.	0.	0.
28	238.	7.	0.	0.	0.
30	245.	5.	0.	0.	0.
32	252.	3.	0.	0.	0.
34	258.	1.	0.	0.	0.
36	265.	0.	0.	0.	0.
38	271.	0.	0.	0.	0.
40	278.	0.	0.	0.	0.
42	284.	0.	0.	0.	0.
44	291.	0.	0.	0.	0.
46	298.	0.	0.	0.	0.
48	304.	0.	0.	0.	0.
50	311.	0.	0.	0.	0.
52	317.	0.	0.	0.	0.
54	324.	0.	0.	0.	0.
56	330.	0.	0.	0.	0.
58	337.	0.	0.	0.	0.
60	344.	0.	0.	0.	0.

TABLE 9

CONTINGENCY AIRLIFT OF TWO ARMY DIVISIONS BY MAC AND CRAF

NUMBER OF DIVISIONS DEPLOYED IS 2

CLOSURE IN DAYS	REQUIRED AIRLIFT MTM	MAC UTE RATE 4 HRS	MAC UTE RATE 6 HRS	MAC UTE RATE 8 HRS	MAC UTE RATE 10 HRS
		747C EQUIVALENTS REQUIRED			
2	302.	894.	871.	847.	824.
4	311.	433.	415.	392.	369.
6	320.	236.	263.	240.	217.
8	329.	210.	187.	164.	141.
10	339.	165.	141.	118.	95.
12	348.	134.	111.	88.	65.
14	357.	112.	89.	66.	43.
16	366.	95.	73.	50.	27.
18	375.	84.	60.	37.	14.
20	384.	73.	50.	27.	4.
22	394.	65.	42.	19.	0.
24	403.	58.	35.	12.	0.
26	412.	52.	29.	6.	0.
28	421.	47.	24.	1.	0.
30	430.	43.	20.	0.	0.
32	439.	39.	16.	0.	0.
34	448.	36.	13.	0.	0.
36	458.	33.	10.	0.	0.
38	467.	30.	7.	0.	0.
40	476.	28.	5.	0.	0.
42	485	26.	3.	0.	0.
44	494.	24.	1.	0.	0.
46	503.	22.	0.	0.	0.
48	513.	20.	0.	0.	0.
50	522.	19.	0.	0.	0.
52	531.	17.	0.	0.	0.
54	540.	16.	0.	0.	0.
56	549.	15.	0.	0.	0.
58	553.	14.	0.	0.	0.
60	567.	13.	0.	0.	0.

TABLE 10

CONTINGENCY AIRLIFT OF THREE ARMY DIVISIONS BY MAC AND CRAF

Reproduced from best available copy.

NUMBER OF DIVISIONS DEPLOYED IS 3

CLOSURE IN DAYS	REQUIRED AIRLIFT MTM	MAC UTE RATE 4 HRS	MAC UTE RATE 6 HRS	MAC UTE RATE 8 HRS	MAC UTE RATE 10 HRS
		TACC EQUIVALENTS REQUIRED			
0	451.	1357.	1334.	1311.	1288.
4	463.	674.	651.	628.	604.
6	474.	446.	423.	400.	377.
8	486.	339.	309.	286.	263.
10	498.	264.	241.	217.	194.
12	510.	219.	195.	172.	148.
14	521.	186.	162.	139.	116.
16	533.	161.	138.	115.	92.
18	545.	140.	119.	96.	73.
20	557.	127.	104.	81.	58.
22	568.	115.	91.	68.	45.
24	580.	104.	81.	58.	35.
26	592.	95.	72.	49.	26.
28	604.	87.	65.	42.	19.
30	615.	81.	58.	35.	12.
32	627.	76.	53.	29.	6.
34	639.	71.	48.	24.	1.
36	651.	66.	43.	20.	0.
38	662.	62.	39.	16.	0.
40	674.	58.	36.	12.	0.
42	686.	55.	32.	9.	0.
44	697.	52.	29.	6.	0.
46	709.	50.	27.	3.	0.
48	721.	47.	24.	1.	0.
50	733.	45.	22.	0.	0.
52	744.	43.	20.	0.	0.
54	756.	41.	18.	0.	0.
56	768.	39.	16.	0.	0.
58	779.	37.	14.	0.	0.
60	791.	36.	13.	0.	0.

Normal Operations

The purpose of this section is to inform the reader of MAC's capability to satisfy DOD's peacetime requirements.

The authors made the following assumptions in computing the data for the following charts.

1. Daily outbound requirements are 3,987,000 ton miles. This figure was computed in the Cost Analysis section, see Chapter VI.

2. Range of Operation: 3,000 nm.

3. C-5A

Block speed:	409 knots
Payload:	75.6 tons
Ton mile factor:	409 x 75.6 = 30,920 ton miles
Utilization rate:	2.22 hours per day
Airframes:	70

4. C-141

Block speed:	409 knots
Payload:	24.6 tons
Ton Mile Factor:	409 x 21 - 8,589 ton miles
Utilization rate:	3.79 hours per day
Airframes:	234

5. Outbound productivity was 50 percent of total productivity.

6. In computing productive capability, a percentage factor consisting of test, training and ferry (TTF) was deducted from gross capability. The TTF factor used was 15 percent. (3:4)

7. Daily outbound productivity for C-141 was 3,875,822 ton miles.

(Ton miles = blockspeed x Payload x Airframes x Utilization rate x (1-TTF) x Outbound productivity factor)

8. Daily outbound productivity for C-5A was 2,017,173 ton miles.

(Ton mile formula same as for C-141)

The following three tables enable the reader t. determine MAC's daily outbound productivity for the C-141, C-5A and total capability for various utilization rates.

Synthesizing, MAC has the capability to airlift one Army division with minimal assistance required from CRAF. However, if DOD planners desire to deploy more than one division, CRAF's impact on closure time becomes increasingly evident as more divisions are deployed. The authors believe that this would be the case in most contingencies.

During normal operations, MAC has the capability to airlift all DOD requirements. The C-141 alone could airlift

TABLE 11

TOTAL C-141 DAILY OUTBOUND PRODUCTIVE CAPABILITY

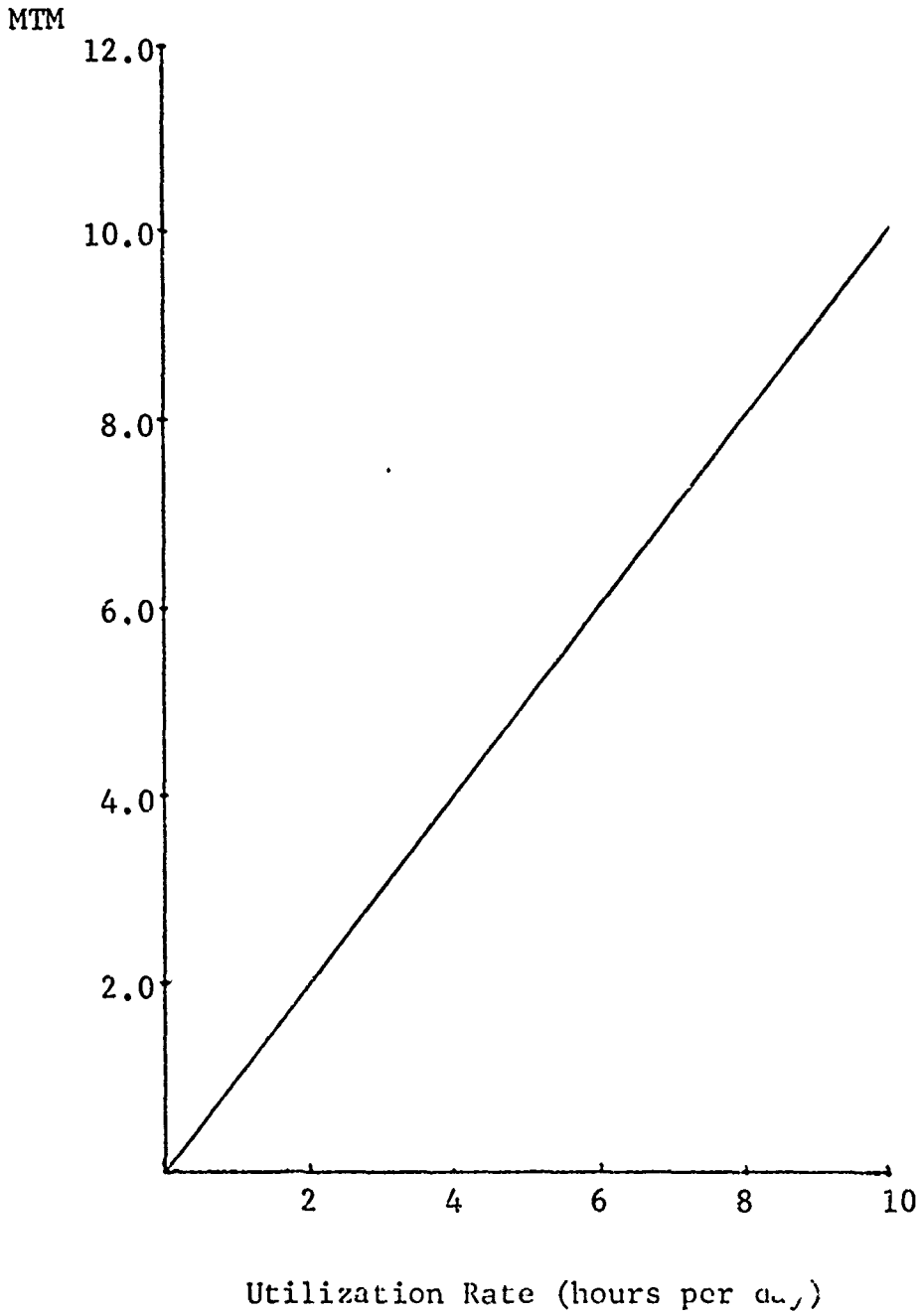

TABLE 12

TOTAL C-5A DAILY OUTBOUND PRODUCTIVE CAPABILITY

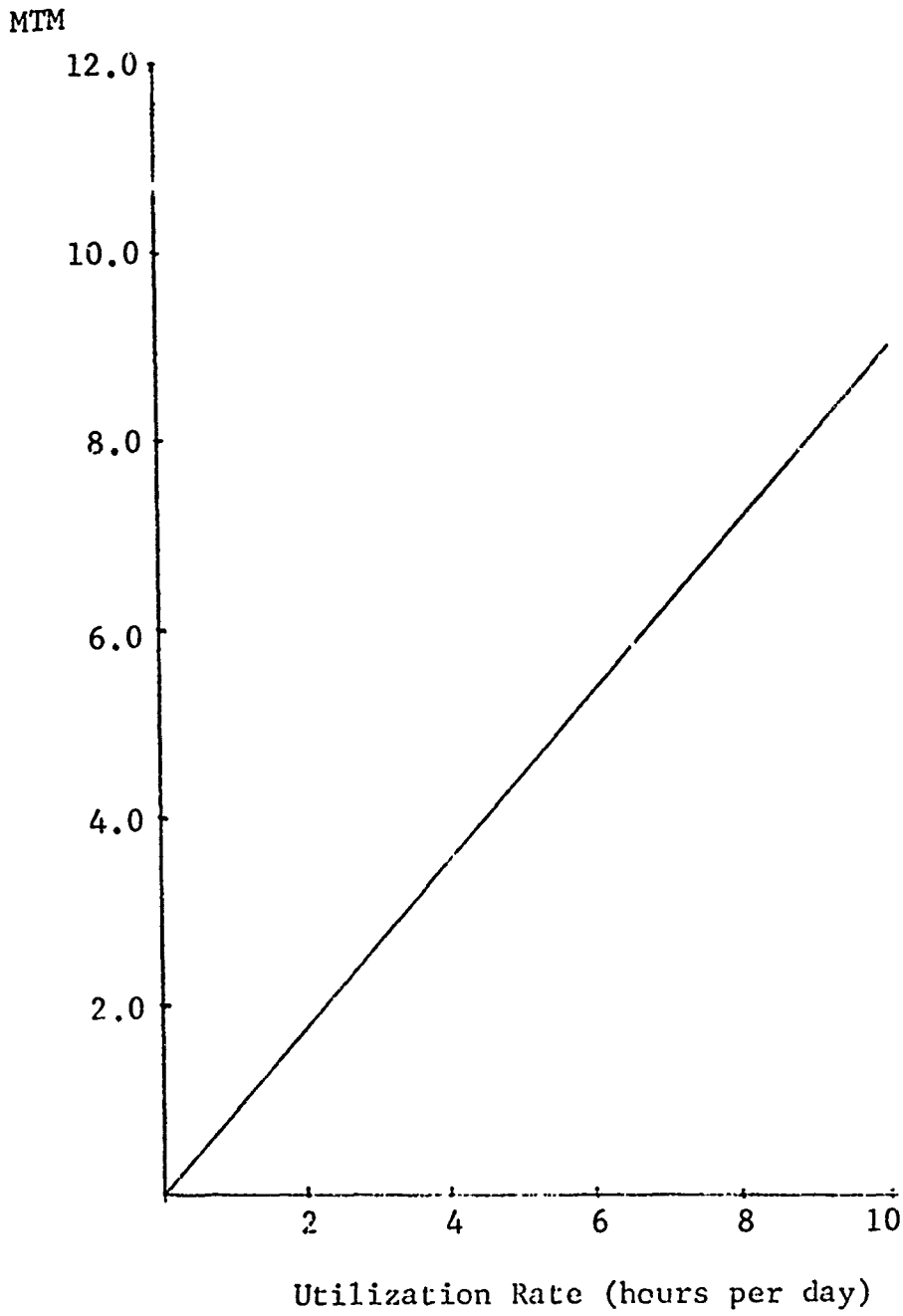

TABLE 13

TOTAL MAC DAILY OUTBOUND PRODUCTIVE CAPABILITY

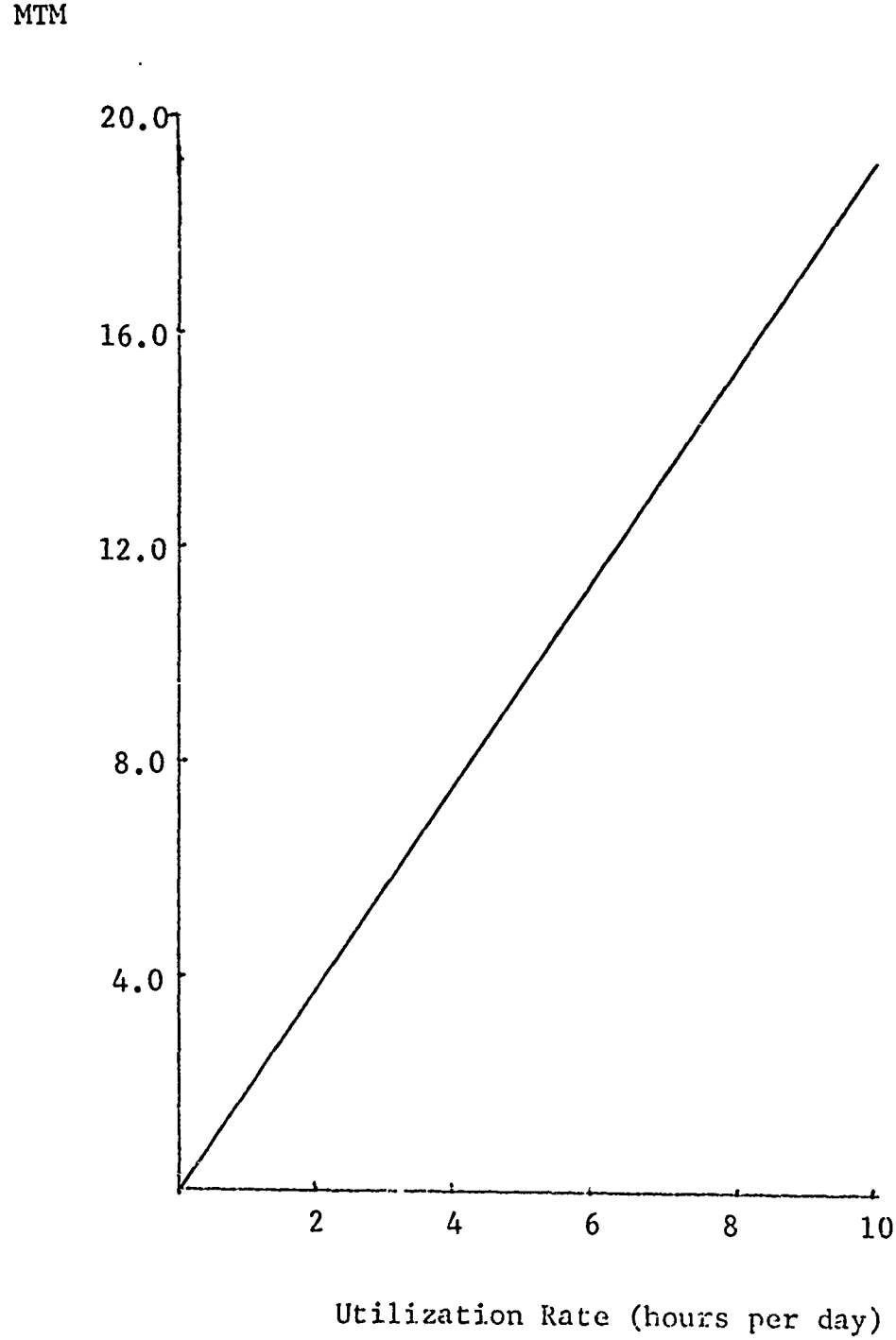

99 percent of this cargo. The authors contend that DOD planners must not be lulled into a false sense of security by projecting normal operations to contingency operations. In the opinion of the authors, CRAF's contribution to augment MAC during emergencies is vital for a viable flexible response concept.

CHAPTER V

COST

Background

Prior to a study of the cost factors of strategic airlift, it is necessary to provide the reader with background material on how the system is financed. The Secretary of Defense, by DOD Directive 5160.2, established a Single Manager Assignment for Airlift Service and designated the Secretary of the Air Force as the Single Manager. The Secretary of the Air Force was required to establish Airlift Service on an industrial fund concept. The Airlift Service function began operations under the Air Force Industrial Fund (ASIF) on July 1, 1958. As directed by the Secretary of Defense, operation of the Single Manager Operating Agency provides air transportation between the United States and overseas areas for all agencies of the Department of Defense and for other authorized agencies of the U.S. Government. These requirements may be met with military airlift or commercial augmentation. Because of the ASIF, MAC as a provider of airlift service, has the flexibility

to respond to changing requirements with its own organic capability or to procure commercial augmentation. (134:2)

The commercial carriers provide transportation for the military at a rate per-ton-mile established by the Civil Aeronautics Board (CAB). This is the actual cost MAC must pay the air carriers to haul charter cargo and is constant regardless of the amount of cargo shipped. The CAB rate is a composite established after a detailed examination of each carrier's costs to produce transportation; plus, a return on investment to help ensure a financially healthy civil air carrier industry. The rate is subject to review and change periodically, reflecting the general business conditions of the air transportation industry.

As an illustration, a history of the CAB's rate levels are shown in Table 14. Historically, the rates have annually decreased because of rising productivity, but since 1970 have increased because of rising costs in the industry without an offsetting increase in productivity.

The one-way rate is 1.99 times the round trip rate; therefore, if a civil aircraft chartered to MAC has to fly empty on a return trip, MAC must pay 99 percent of the cost that it would have paid if the carrier had hauled cargo. Also, when MAC charters a civilian aircraft to carry cargo,

TABLE 14

CAB INTERNATIONAL MILITARY CARGO RATES

	Cents Per Ton Nautical Mile Round Trip	One Way
December 60-March 61	16.69	31.65
April 61-January 62	15.82	25.89
February 62-December 63	14.39	24.74
January 64-June 64	13.23	24.17
July 64-June 65	12.08	21.87
July 65-March 66	10.93	20.29
April 66-May 67	10.36	19.51
June 67-June 68	8.573	17.04
July 68-July 70	8.125	16.17
August 70-June 71	8.893	17.70
July 71-	8.56*	16.64*

*Data obtained from Hq MAC (135:11)

it pays the CAB set rate per ton mile for the entire CAB established tonnage capacity of the aircraft regardless of the actual tonnage of cargo carried on the flight. These CAB set tonnages are as follows:

B707-320, DC8-55 and DC8-62	36.5 tons
DC8-61 and DC8-63	45.0 tons

MAC determines the rate to be charged to the user to reimburse the ASIF for airlift service rendered by industrially funded military airlift and contracted commercial air carriers. These rates are adjusted periodically in an attempt to achieve a zero balance in the ASIF. The user pays only for actual tonnage transported except for Special Air Missions where the user charters the aircraft. Payments from the ASIF are made only for current operating expenses of the Airlift Service. These include the cost of services procured from commercial airlines, civilian pay, fuel, temporary duty for aircrews, maintenance of aircraft, operation of MAC cargo and passenger terminals, and a portion of the expenses of MAC Headquarters engaged in the administration of airlift operations. Exclusions include military pay, major procurement items or depreciation, and base operating and support costs. (134:3)

The one way international cargo rate that is charged to the user is shown in Table 15.

The types of airlift service provided under the ASIF are:

Channel Traffic. Channel traffic is movement of personnel and cargo over established world-wide routes. Channel service is provided by military industrial funded

TABLE 15

ONE WAY ASIF INTERNATIONAL
CARGO RATE

Date	Cents per Ton Nautical Mile
April 1967	14.00
July 1967	12.00
December 1967	9.30
January 1969	9.40
July 1969	9.30
May 1970	10.20
July 1971	9.70

(135:12)

aircraft and commercial aircraft under contract to MAC, on a common user basis for all DOD agencies and other agencies as authorized.

Special Assignment Airlift. Special Assignment Airlift Missions (SAAM) embodies the concept of the customer "leasing" the entire aircraft to move traffic which requires special handling or when the point of origin or destination is not served by routine channel traffic.

Other Airlift Services. Other types of airlift services include International and Domestic Aeromedical Evacuation, Joint Airborne/Air Transportability Training (JA/ATT), Joint Exercises, Special Airlift (Distinguished Persons), Rest and Recuperation, Cuban Refugee Support, and Post Office mail. (124:3)

A study prepared by the Air Staff was used to establish the requirement and capability of strategic airlift. (124)[1]

Facts and Assumptions

The facts and assumptions made by this study are listed below:

Facts

1. The time frame to be addressed is FY 74 through 78.

2. The peacetime utilization rates are the minimum required to enable MAC to maintain the necessary readiness to accomplish its wartime mission (2.22 hours per day for the C-5A, and 3.79 hours per day for the C-141). (60)(124:13)

3. Airlift capability computations are derived from data contained in AFM 76-2 dated March 20, 1972.

---

[1]The format of this report is updated and used to determine airlift requirements and incremental costs.

a. The C-141 ton mile planning factor is 10,283 based on a cargo allowable cabin load (ACL) of 24.6 tons and a block speed of 418 knots. (418 knots x 24.6 tons = 10,283 ton miles) All ton miles will be in ton nautical miles.

b. The C-5A ton mile planning factor is 30,542 based on a cargo ACL of 75.6 tons and a block speed of 409 knots. (409 knots x 75.6 tons = 30,542 ton miles)

4. The military airlift system resources to be analyzed are the end of FY 73 programmed forces (234 C-141s and 70 C-5As). Although not formed, the capability of all programmed associated units is included in FY 74 computations.

5. Current FY 1974 Five Year Defense Program (FYDP) terminal and aerial port support costs (overhead) were used.

6. Direct operating costs and cost per flying hour are those contained in the FY 73 Budget Estimate. ($1216 per hour for the C-5A and $507 per hour for the C-141). (124:20)

7. The FY 73 Budget Estimate is the basis for cargo overhead costs.

8. Commercial cost figures represent round-trip commercial procurement ($.0856/Ton Mile (TM) one-way commercial procurement ($.1664/TM) at current CAB rates per ton

nautical mile.

9. Data used in computations reflect gross tariff rates only.

10. SAAM C-141/C-5A hours were developed by adjusting FY 73 approved budget hours to comply with SAAM workload requirements of 660.3 MTM's.

11. Capability figures for the C-5A/C-141 were degraded 5 percent for positioning, depositioning, and circuitous routing. The ton mile reduction is based on the premise that the variables mentioned are unproductive and should not be considered part of the aircraft's capability.

Assumptions

1. All channel passenger requirements were assigned to commercial augmentation aircraft.

2. Opportune airlift was not considered.

3. Projected round-trip world-wide channel traffic cargo allowable cabin load (ACL) utilization which can be achieved, was assumed to be 75 percent for commercial and 70.4 percent for military unless otherwise stated.

4. No international air evacuation requirements were considered.

5. Past years' experience has shown that the SAAM rate has been 2-3 cents per ton mile less than the cargo

channel tariff rate. The same percentage ratio was assumed. The following computations were used:

a. A single cost base for both channel and SAAM was developed.

b. The single cost base was reduced by 10 percent. This represents the SAAM tariff rate.

6. The OASD (SA) Study, October 1970, "An Examination of the Possible Impact of Projected DOD Airlift Requirements on MAC Airlift Operations FY 72-76," was used as a basis for projecting FY 74-78 requirements.

7. Manpower planning factors are based on beginning FY 73 authorizations.

Airlift Capability Produced by Minimum Utilization Rates. The minimum utilization rates are 2.22 for the C-5A and 3.79 for the C-141. (See Figure 14).

Development of Requirements

The primary mission of the MAC military airlift force is to provide strategic airlift for rapid deployment and logistic support during contingencies. The size and capability of the military airlift force therefore, is determined by this mission. In peacetime, the capability generated as a result of maintaining the MAC military airlift system in a state of readiness is used in meeting DOD's

	Hours	Million Ton Miles (MTM's)
Produces a gross capability of	375,214*	4,991.7
Less non-productive hours	108,812	1,447.6
Leaves for Exercises/ JA/ATT, SAAM and channel cargo	266,402	3,544.1
Less Exercises/ JA/ATT hours	60,034	798.7
Leaves for SAAM and channel cargo	206,368	2,745.4
Less SAAM requirement	53,656	713.8
Leaves for channel requirements	152,712	2,031.6
1. 1/2 capability for outbound channel cargo requirements		1,015.8
Degraded to 70.4 percent for ACL utilization		715.1
2. 1/2 capability for inbound channel cargo requirements		1,015.8
Degraded to 70.4 percent for ACL utilization		715.1

*Based on 360 day year

Figure 14

peacetime air transportation requirements.

A review of the total annual airlift requirements (passenger, cargo and mail) for MAC from 1960 to the present indicates an increase from 1.3 Billion Ton Miles (BTM) in 1960 to nearly 2.3 BTM in 1965. Beginning in 1966, with the increased U.S. activity in Southeast Asia, MAC airlift requirements increased significantly and continued to increase at an accelerated pace through FY 68. Paralleling U.S. action in Vietnam, airlift requirements began declining in FY 69 and have steadily decreased from a high of approximately 7.5 BTM in FY 1968 to the FY 73 budget projection of nearly 4.0 BTM.

In view of the decline in U.S. involvement in Southeast Asia, recent troop reductions, and the austere Department of Defense budget, it would appear reasonable to expect a decline in airlift requirements to a new peacetime level, but not below the pre-Southeast Asia period adjusted for growth.

The June 1972 Air Staff study made a projection of MAC peacetime airlift requirements. (124) Two studies, made within OSD projecting MAC peacetime airlift requirements, were the basis for the projections. One study was accomplished by OASD (I&L), March 1970, entitled "Airlift

Requirements vs Military Airlift Capability." A study in October 1970 was prepared by OASD (SA) entitled "An Examination of the Possible Impact of Projected DOD Airlift Requirements on MAC Airlift Operations FY 76-76" (M. L. Tulkoff). Although these studies differ significantly in their long-range projection of requirements, the Air Staff used the more conservative projection of requirements (Tulkoff) and adjusted them for recent experience in the Atlantic area. Adjustments were made to include projections for Special Airlift Missions (SAAM) and the Army Routine Economic Airlift (REAL) program. Tulkoff projections reflect estimates for routine support yet experience indicates that inevitably there are extraordinary requirements almost every year, e.g. Cuba, Berlin, Korea, as well as fluctuations in Southeast Asia support. Also, Tulkoff projections reflect approximately the airlift requirements prior to the buildup in Southeast Asia. Substantial increases in Military Assistance Programs (MAP) or Military Assistance Service Funded (MASF) type support to the countries in Southeast Asia prior to U.S. withdrawal, as compared to pre-Southeast Asia activity, would require an upward adjustment of requirements.

The Tulkoff forecast was a gross projection of requirements and no conclusion was made that would reflect the ratio of outbound to inbound movement. The Air Staff assumed that overall total inbound channel requirements are 42 percent based on the FY 62-71 ten year average of overall total outbound channel requirements, a ratio of 5 to 2.1. Tulkoff projects a 635 MTM SAAM requirement for FY 74-76 based on a relationship with channel cargo requirements, developed by linear regression analysis. The Tulkoff channel cargo projections were adjusted upward by the Air Staff analysts, based on the assumption that the SAAM relationship was correct. The SAAM projections were also adjusted upward. The projection of SAAM requirements for FY 74-78 to 660 MTM per year for FY 74-78.

The Army's REAL program was formulated after the Tulkoff study and cargo was first moved under this program in September 1971. The Army projects that approximately 20,000 tons will be moved by the end of FY 72 and for the period FY 74-78 it is estimated that movement will average 36,000 tons per year. Tulkoff's projections were increased by the Air Staff to reflect the Army REAL program in the following quantities; 24,000 tons to the Pacific (133 MTM) and 12,000 to Europe (38 MTM). (123:15)

Even after the upward adjustment, estimates of channel cargo requirements still appear very conservative. A review of Tulkoff's Atlantic estimates indicate that they are understated in view of the 404.2 MTM experienced in the Atlantic in FY 71. Moreover, the budget estimate for the Atlantic in FY 72 and FY 73 is nearly double the Tulkoff projections. Under this premise, there is some validity in the assumption that the requirements for the Atlantic will not return to pre-Southeast Asia levels; a 475 MTM is a more realistic Atlantic estimate for FY 74-78. This results in an additive of 230 MTM to the Tulkoff figure. The requirements as developed by the Air Staff study will be used by the authors for analysis. Details of requirements projections are listed in Table 16.

Other factors that influence the requirement projections must be considered. Forty-one percent of channel airlift requirements can be accomplished only by MAC military airlift. This is based upon historical data. These requirements are dangerous, outsized, or need special security consideration. This equates to 451.4 MTM of the 1.101 BTM per year total channel cargo requirements that must be moved by military airlift. Also 90.2 percent of all Special Assignment Airlift (SAAM) requirements are dangerous,

TABLE 16

CHANNEL CARGO AND SAAM REQUIREMENT PROJECTIONS

Channel Cargo	Million Ton Miles		
Pacific	455		
Atlantic (245 + 230)	475		
Subtotal	930		
Additive for REAL			
Pacific	133		
Atlantic	38		
Subtotal	171		
Total Channel Cargo		Outbound	Inbound
Pacific (455 + 133)	588	414.1	173.9
Atlantic (475 + 38)	513	361.3	151.7
TOTAL	1,101	775.4	325.6
Special Assignment Airlift (other than exercises)	660		
OVERALL TOTAL	1,761		

outsize, or need special security considerations and can be transported only by military aircraft. In the Air Staff study, 100 percent or 660 MTM per year were assumed to require military airlift, and the authors of this paper will make the same assumption.

Development of the Incremental Ton-Mile Cost

The MAC airlift system must be provided the manpower during peacetime to meet the maximum peacetime utilization rate and then be able to accelerate to that level of activity necessary to accomplish its wartime mission. To meet the wartime level of activity, the workweek of the manpower resources will be extended well beyond the normal peacetime workweek. During peacetime, MAC's flying hour program is designed to provide readiness training, and to maintain a combat readiness posture during peacetime. The airlift force may be used for four basic purposes:

1. The joint training of MAC airlift crews and support personnel with the Army units to be deployed during a contingency operation. (Joint Airborne Training and Joint Chiefs of Staff (JCS) Exercises or ABT/EX)

2. The initial and recurring qualification of air and ground crews in the operation of aircraft systems.

3. Global training to qualify crews in global operations and to exercise command and control personnel, terminal personnel (stateside and offshore), maintenance personnel, and enroute support teams. The training missions are flown over probable contingency deployment routes. The airlift of Special Assignment Airlift Mission (SAAM) cargo and channel traffic by MAC while flying on global training missions is considered a beneficial by-product of this category.

4. The airlift of DOD cargo while not on a training flight.

The maximum operational peacetime utilization rate for the C-141 and C-5A is estimated to be 4.56 hours per day. If the MAC airlift force is utilized to accomplish the four missions, a maximum peacetime utilization rate will result. The flying hours required to meet the first three objectives establish the minimum peacetime utilization rate required to maintain a combat readiness posture. The minimum peacetime utilization rate is 2.22 for the C-5A and 3.79 for the C-141. Consequently, if MAC is directed to accomplish the minimum peacetime utilization rate, the operational productivity of the force will be less than at the maximum operational peacetime utilization rate of 4.56 hours per day

which it is capable of producing.

Certain expense elements associated with ASIF are relatively independent of the flying hours accomplished by the MAC force. During FY 73, it is estimated that 25 per cent of the Depot Maintenance Expenditures will remain relatively constant regardless of the utilization rate of the force. Civilian pay, contract fleet and traffic service, the Wake Island contract, communications, and real property maintenance are other examples of expense categories that do not vary in proportion to flying hour accomplishment. (124:18) The total cost per flying hour is influenced by these fixed costs. When the utilization rate of the strategic airlift force is increased from the minimum to support readiness training, the total cost per flying hour decreases. The members of the Air Staff study group were unable to precisely quantify the individual expenses associated with each element of the Industrial Fund. Since one objective of this study was to examine the cost per incremental ton-mile of capability (as the utilization rate increases from the minimum required rate), it was assumed that the cost per flying hour remains constant, or the hourly cost to fly a rate of one hour per day is the same as that incurred at a rate of 4.56 hours per day. (124:18)

Using this assumption removes any doubts as to the various values which would be assigned to the incremental cost per flying hour. A reduction in cost per incremental ton-mile would be realized despite the assumption of a constant flying hour cost. As additional flying hours are produced, almost 100 percent productivity will be realized as all required training and other non-productive flying hours have already been accomplished. Thus, the costs associated with non-productive hours are distributed over an increasingly large number of hours, and the total cost per ton-mile is reduced.

Flying Hour, Capability, and Expense Comparison

(From Minimum Utilization Rates to the Maximum Operational Peacetime Rate)

Flying Hours

			Hours
C-141	at 4.56 U.R.	4.56 x 234 x 360 =	384,134
	at 3.79 U.R.	3.79 x 234 x 360 =	319,270
	Difference.....		64,864
C-5A	at 4.56 U.R.	4.56 x 70 x 360 =	114,912
	at 2.22 U.R.	2.22 x 70 x 360 =	55,944
	Difference.....		58,968

Gross Productive Capability

			MTM
C-141	at 4.56 U.R.	384,134 x 10,283 =	3,950.0
	at 3.79 U.R.	319,270 x 10,283 =	3,283.0
	Difference.....		667.0
C-5A	at 4.56 U.R.	114,912 x 30,542 =	3,509.6
	at 2.22 U.R.	55,944 x 30,542 =	1,708.6
	Difference.....		1,801.0

Expenses

			Dollars
C-141	at 4.56 U.R.	384,134 x $507 =	$194,756,000
	at 3.79 U.R.	319,270 x $507 =	161,870,000
	Difference.....		$ 32,886,000
C-5A	at 4.56 U.R.	114,912 x $1,216 =	$139,733,000
	at 2.22 U.R.	55,944 x $1,216 =	68,028,000
	Difference.....		$ 71,705,000

(a) Direct operating cost

C-141: 64,864 hours x $507 = $32,886,000
$32,886,000 ÷ 667.0 MTM = .04930345 per TM

C-5A: 58,968 hours x $1216 = $71,705,000
$71,705,000 ÷ 1801.0 MTM = .03981399

(b) Adding weapon system cost to direct operating costs, amortized over the expected flying hour service life.

C-141: $6.20 (million) cost per airframe x total procured 279 = $1,729.8 (million) total procurement cost.

$6.20 (million) cost per airframe ÷ 30,000 = $207 per hour for depreciation.

Direct cost per flying hour $507 + $207 (depreciation) = $714 per hour x 64,864 hours = 46,312,896 ÷ 667.0 MTM (productive capability) = $.06943463 cost per TM with depreciation.

C-5A: Depreciation 14,000 hours*

$37.95 (million) cost per airframe x total procured (81) = $3,073.9 (million) total procurement cost.

$37.95 (million) cost per airframe ÷ 14,000 = $2,711 per hour for depreciation.

Direct cost per flying hour $1216 + $2711 (depreciation) = $3,927 per hour.

$3,927 per hour x 58,968 hours = 231,567,330 ÷ 1801.0 MTM (productive capability) = $.12857709.

Note: To reduce the cost per mile to the commercial rate the aircraft life would have to be 27,000 hours.

(c) Compare this cost with projected cost for commercial.

C-141: 667.0 MTM productive capability x CAB commercial cargo rate $.0856 = $57,095,200 commercial required.

Direct Operating Cost only.....$32,886,000

Direct Operating Costs with Depreciation.....$46,312,896

Commercial Required.....$57,095,200

*14,000 is mean expected life of C-5A.

C-5A: 1,801.0 MTM productive capability x CAB commercial cargo rate $.0856 = $154,165,600 commercial required.

Direct Operating Costs only.....$ 71,705,000

Direct Operating Costs with Depreciation.....$231,567,330

Commercial Required.....$154,165,600

For a comparison with ATA's method of estimating Direct Operating Costs, see Appendix H.

In a discussion of depreciation, those costs associated with the Research and Development (R&D) of an airframe should be addressed as "sunk costs." Since R&D efforts may or may not result in procurement, committed funds should be excluded in amortization calculations. As in the case of the XB-70 there were R&D funds expended but the system was never procured. The R&D efforts associated with one specific aircraft system often have application to more than just that one system. Not only did the C-141 and C-5A R&D efforts benefit future military programs, but they also have had applications in the commercial aircraft industry. As the Honorable Secor D. Brown, Chairman of the CAB stated, "The reason there is a B-747 or a DC-10 today, in my judgment, is that there is a C-5A. The C-5A paid for the development of the General Electric engines that

power the DC-10. A parallel program paid for the development of the P&W engines that power the 747." (124:25)

For this analysis, R&D funds are excluded from the calculations of acquisition costs because it is felt they should be treated as basic research.

CHAPTER VI

JUSTIFICATION FOR CRAF

Need for CRAF

The previous chapters have demonstrated the capabilities of the aircraft for both MAC and CRAF. As mentioned earlier, the available cargo to be airlifted in the 1970s will be significantly reduced. Most military planners whom the authors interviewed readily admitted that MAC could easily carry all of DOD's peacetime cargo even with the C-5A flying 2.2 hours per day. The obvious question is why have CRAF? Supporters can justify CRAF's existence by quoting the 1960 Presidential Approved Course of Actions, Congressional Airlift hearings and quoting military and congressional leaders who advocate a strong CRAF to support MAC in event of a General War. The authors, however, believe that CRAF is essential from a practical viewpoint if America is to have a viable strategic airlift capability for the future.

Experience in SEA has confirmed two broad conclusions concerning strategic airlift:

First, the demand for airlift becomes extremely heavy very early in a contingency operation.

Second, contrary to most beliefs, the requirements do not level off after the initial buildup. Instead, they continue to mount as the contingency progresses. (53)

These two facts have become increasingly important with the current emphasis on mobility and the resultant focus on strategic airlift responsiveness to those DOD requirements.

Secretary Whitaker supports the authors' contention that convertible aircraft are required for the CRAF fleet.

> Future contingencies which would justify activation of CRAF will probably involve a great increase in requirements to move cargo and troop units and little increase, possibly even a decrease, in other types of passenger movements. Consequently, we anticipate that during the contingency period we will need a considerably greater amount of cargo airlift capability from the CRAF carriers than we will have been using in the preceding peacetime period. This is the basis for our continuing to favor convertible aircraft for CRAF to the greatest practicable extent. (73:6692)

The Air Force position, as expressed by General Ryan, Air Force Chief of Staff, is for more C-5A's to adequately support the one and one-half war policy. "The objective force which the Joint Chiefs recommended was 96 unit equipped (UE) C-5A's." (76:6732) He elaborated by saying the Joint Chiefs unanimously approved this quantity of

C-5A's in the Joint Strategic Operation's Plan (JSOP) 71-77 and in the 72-79 JSOP. They also recommended 234 UE C-141s. (73:6732)

MOVECAP 70-74 (Joint Chiefs of Staff Study on strategic movement capability), recommended 14 squadrons of C-141s and 6 squadrons of C-5As. Note: One squadron consists of 16 aircraft. This recommendation was based on an expected utilization rate of 10 hours per day. (73:6230)

Every military study that the authors were able to see strongly endorsed at least 96 C-5As and 234 C-141s.

Since the number of C-5As has been limited to 70 UE aircraft, the authors contend that MAC will not be able to meet its commitments.

This problem is further compounded with the reduced operational capability of the C-5A. If a prolonged contingency such as Vietnam were to surface and MAC elected to surge to 8-10 hours per day, the expected life of the C-5A might not outlive the emergency. The authors believe that MAC will be forced to monitor judiciously the amount of flying time and type of flying to ensure that the aircraft is operational through the 1980s.

The authors believe that the tremendous cost of the aircraft, and an even more exorbitant cost to replace it,

necessitates that other aircraft be available to supplement MAC.

Senator Cannon of Nevada expresses congressional opinion by saying, "These extremely expensive logistic aircraft purchased for high priority cargo, are being needlessly utilized and worn out at too fast a pace in routine cargo operations." (79:55039)

If commercial carriers buy sufficient quantities of the large jumbo jets, MAC will possibly be able to replace its organic fleet with "off the shelf" aircraft from commercial sources. Naturally, modifications will be necessary, but possibly the Air Force could avoid the expensive developmental costs associated with the acquisition of new aircraft.

The authors believe that MAC needs to identify itself with strategic airlift and to buy aircraft designed to accomplish that mission. Many of the problems associated with the C-5A can be traced to the planners who tried to make it too versatile; thus, the cost of each aircraft was increased much higher than expected. Unfortunately for MAC, much of the superfluous equipment installed is not expected to ever be utilized.

CHAPTER VII

CONCLUSIONS AND RECOMMENDATIONS

Conclusions

The partnership of military and civilian carriers must be maintained to provide the necessary strategic airlift. There is insufficient commercial oversize cargo airlift to meet emergency DOD requirements. Greater incentive must be created for the commercial carriers to acquire wide-body convertibles in order to remove the deficit that currently exists in CRAF cargo capability.

The air eligibility of logistics must be reviewed and updated as tariff rates are reduced. A continued reduction in tariff rates could be realized by generating a satisfactory amount of air eligible cargo to permit better utilization of capability.

The initial expectations for the Army's REAL program have not been realized. Army planners are reluctant to rely solely on MAC for support; fearful that MAC's resources will be diverted during contingencies. Consequently, the future for the Army's REAL program does not look good.

Recommendations

1. The MAC/CRAF partnership must be continued if this nation is to have a mobile, flexible strategic airlift, capable of sustaining logistic support during emergencies and contingencies.

2. Restructure the CRAF incentive program to create greater incentive for the purchase of the wide-bodied cargo jets.

a) Reduce or terminate the incentive to assign passenger aircraft to CRAF. Award incentive points to a carrier when a purchase request is made for a convertible or cargo aircraft.

b) Expansion cargo and future mail airlift contracts should be awarded to carriers with wide-bodied convertibles or cargo aircraft.

c) Increase the profit margin in the tariff rate for cargo that is carried on a wide-body convertible or cargo aircraft.

d) Expand the mobilization base index formula to recognize the unique and critical value of the wide-body convertible.

e) Review the practice of permitting the carrier to use passenger type aircraft to perform MAC contract missions instead of using the CRAF-allocated convertible type aircraft.

f) As long as there are CRAF-allocated convertibles available to perform MAC missions, such aircraft should be given preference and only in the absence of their availability should non-CRAF aircraft be used. This would motivate the carriers to retire and sell off their passenger type aircraft before disposing of their CRAF-allocated convertibles.

g) Subsidize the construction of the equipment on a wide-body aircraft that is installed to fulfill a military requirement. This extra cost could be subsidized much like the Navy program for merchant ships.

h) Establish fixed percentage or dollar contracts for carriers with cargo or convertible jets.

2. Review criteria for airlift eligibility. The activity generated by the buildup in South Vietnam during the middle 1960s forced military planners to utilize sealift for many items that could have been transported by air. However, only the highest of priority items were authorized for airlift. In the opinion of the authors, there have not been enough constructive studies subsequent to the withdrawal from Vietnam to determine what additional items could be designated for airlift.

For the Army's REAL program to be viable, more cargo must be identified for air transportation.

When comparing sealift vs airlift, military planners must consider the total distribution costs and not just the cost of transportation. Airlift will reduce the number of items in the pipeline and significantly decrease Inventory carrying costs.

One of the problems existing within intermodal transportation is that there are single managers for land,

sea, and air, thus complicating the methodology for computing total distribution costs. If there was one single manager for all modes of transportation, the authors believe that the current problems associated with containerization, terminals and packaging would be significantly reduced.

3. Future procurement of aircraft for airlift should be purchased with strategic airlift specifically in mind. The authors contend that the cost of the C-5A could have been greatly reduced if a few exotic systems had been eliminated; namely, air refueling, landing on unprepared surfaces, and the air delivery system. To replace the C-141 and the C-5A, the authors contend that Air Force should make every effort to buy a jumbo jet "off the shelf" from one of the airplane manufacturers. Admittedly, modifications would be needed; however, the enormous developmental costs would be omitted.

4. The C-5A should be used exclusively for airlift of outsize cargo and to satisfy minimum combat readiness training. This would have the added advantage of increasing the expected life, in years, of the C-5A. The C-5A is the only aircraft in either military or civilian inventory that can airlift outsize cargo.

5. The C-141 should be flown to its maximum recommended peacetime utilization rate (4.56 hours) to take advantage of the lower incremental costs per ton mile.

6. Expand the differential cost per ton mile for retrograde cargo to utilize the available space on return aircraft.

Recommended Research

1. Tactical airlift for the 1980s. With the C-5A being restricted to strategic airlift, how will outsize cargo be transported to the forward combat areas? Will tactical airlift complement strategic airlift to ensure that the flexible response concept is a viable one?

2. Total distribution cost of sealift. Costs that should be considered in addition to transportation costs are:

a) Increase in spares to account for longer pipeline.

b) Terminal costs.

c) Intermodal costs since sealift will not normally reach destination.

d) Wartime costs vs peacetime costs.

3. Detailed comparison between the costs and benefits of sealift vs airlift.

APPENDIX A

The material presented in this section illustrates graphically the difference in the physical characteristics of the cargo and passenger jets in MAC and CRAF. The following is a brief description of each chart.

1. Military/Civilian Comparative Aircraft Design Characteristics. (Illustration 1)

2. Airplane Profiles and Loading Heights (Illustration 2,3,4)

3. Cross Section Comparison (Illustration 5,6,7,8)

4. Comparison of Pallet-Carrying Capabilities (Illustration 9,10)

5. Comparison of Cargo Doors (Illustration 11)

	Military		Civil		
	C-5	C-141	DC-8	B707	B747
Outsize Capability	Yes	No	No	No	No
High Flotation Landing Gear	Yes	No	No	No	No
Drive-On/Drive-Off	Yes	Yes	No	No	No
Airdrop Equipment	Yes	Yes	No	No	No
Troop Transport	Yes	Yes	Yes	Yes	Yes
Bulk and Palletized Cargo	Yes	Yes	Yes	Yes	Yes
Oversize Cargo	Yes	Yes	No	No	No
Aeromedical Evacuation	No	Yes	No	No	No

(135:3)

AIRPLANE PROFILES AND LOADING HEIGHTS

SILL HEIGHTS ARE MAXIMUM

BOEING 737-200C

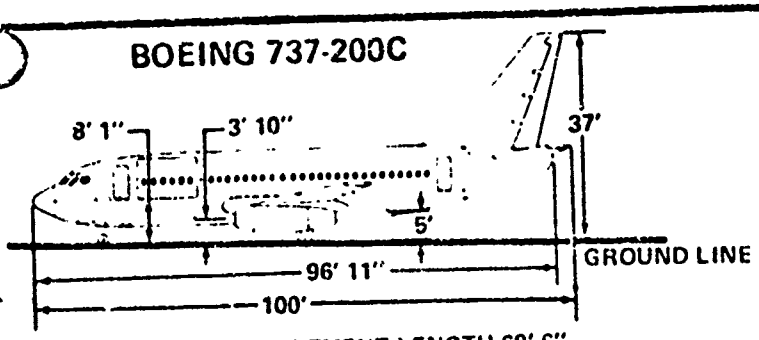

MAIN CARGO COMPARTMENT LENGTH 68' 6"

BOEING 727-100C

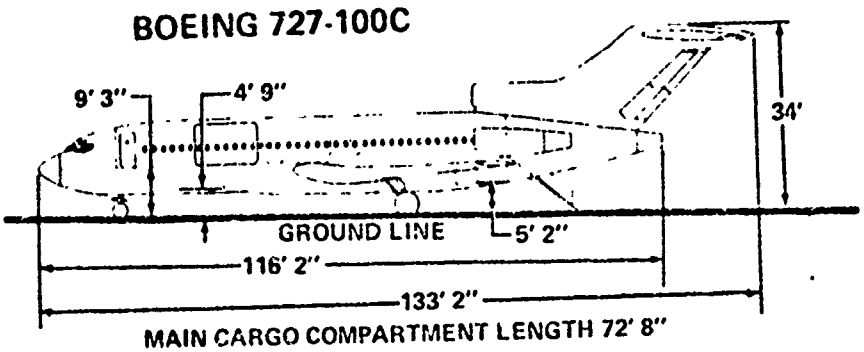

MAIN CARGO COMPARTMENT LENGTH 72' 8"

BOEING 707-320C

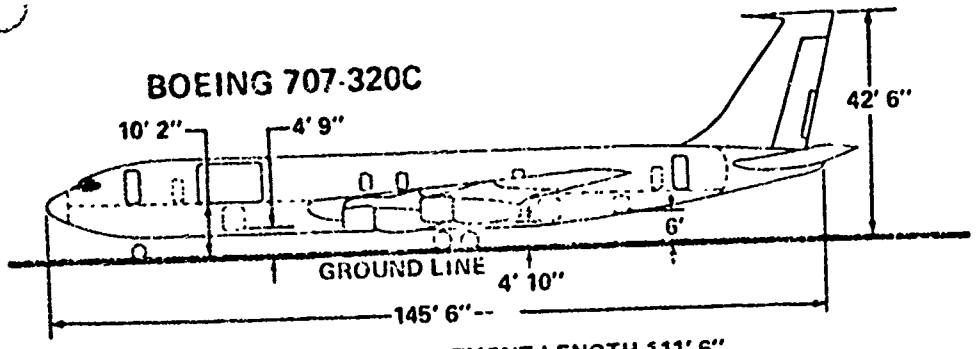

MAIN CARGO COMPARTMENT LENGTH 111' 6"

BOEING 747C

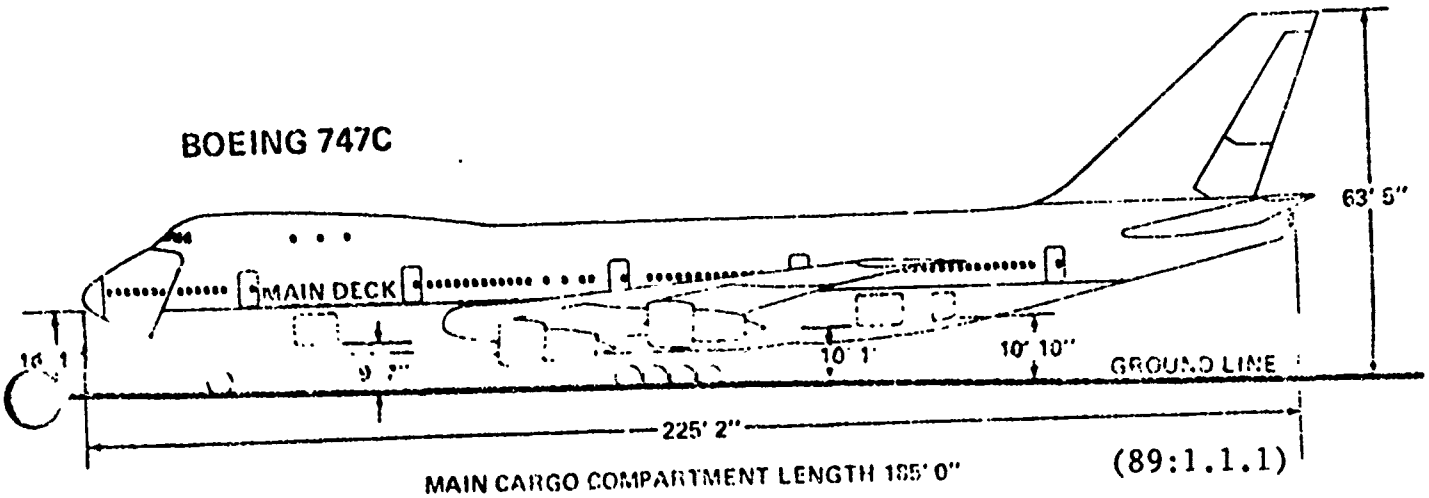

MAIN CARGO COMPARTMENT LENGTH 185' 0"

(89:1.1.1)

AIRPLANE PROFILES AND LOADING HEIGHTS

SILL HEIGHTS ARE MAXIMUM.

DOUGLAS DC-8-55F

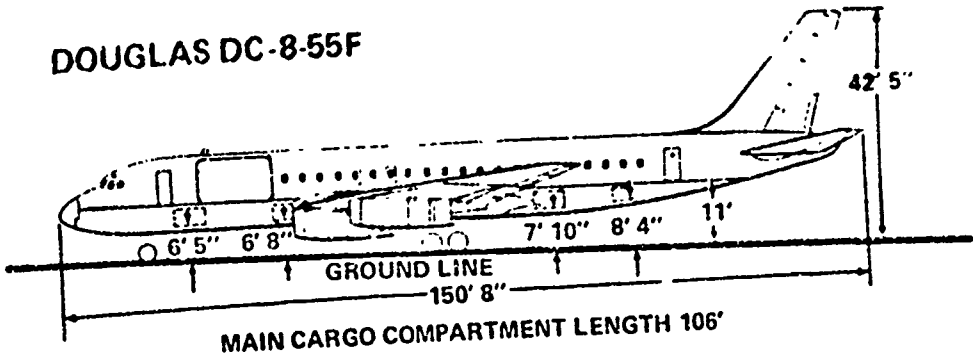

DOUGLAS DC-8-62F

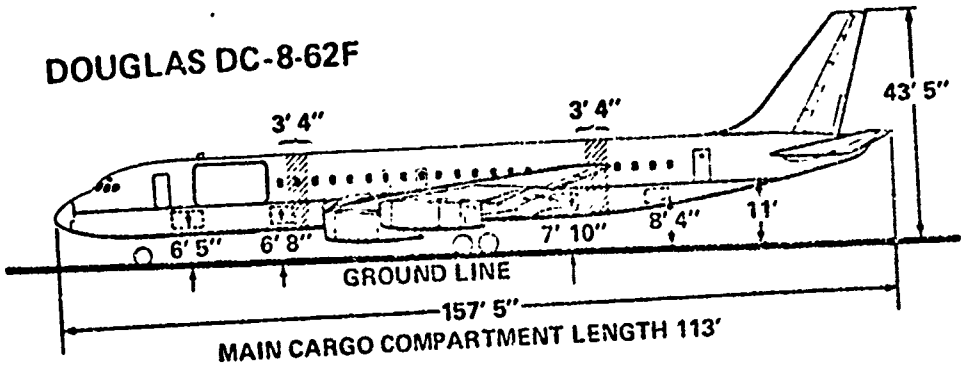

DOUGLAS DC-8-63F

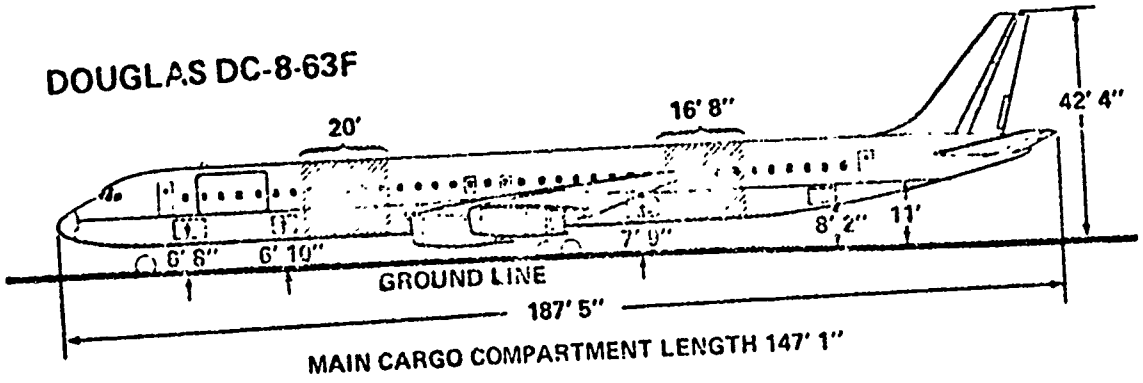

DOUGLAS DC-8-61F

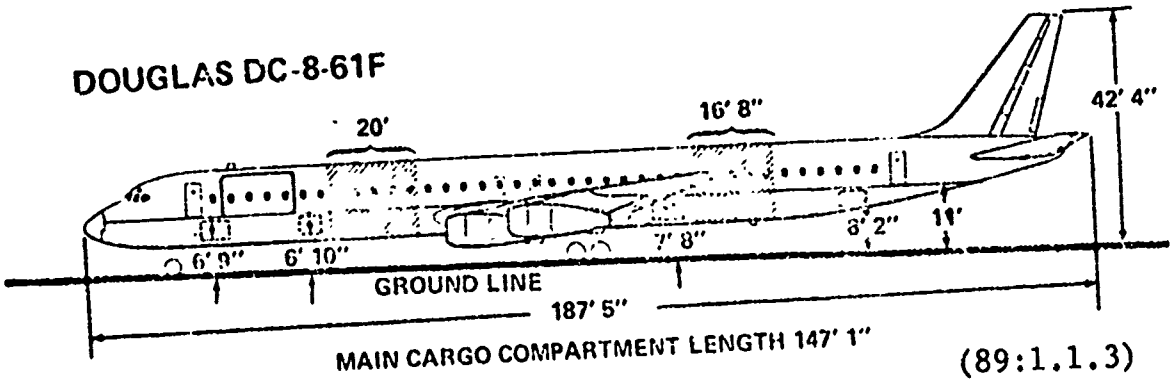

(89:1.1.3)

AIRPLANE PROFILES AND LOADING HEIGHTS

SILL HEIGHTS ARE MAXIMUM.

LOCKHEED L-100

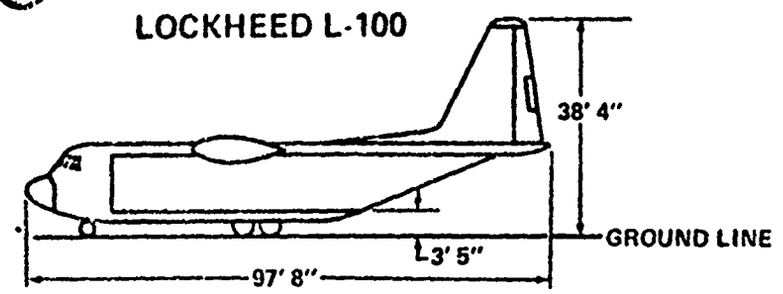

MAIN CARGO COMPARTMENT LENGTH 41' 5"

LOCKHEED L-100-20

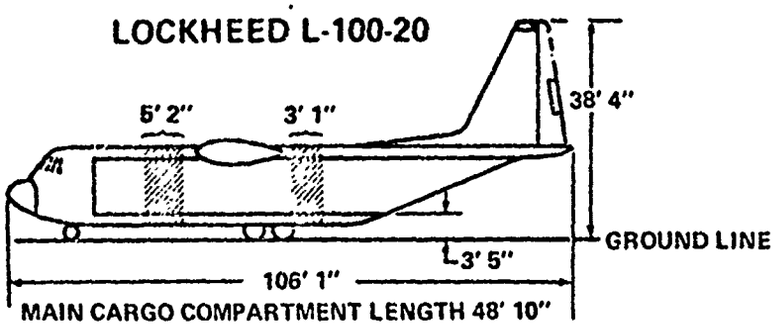

MAIN CARGO COMPARTMENT LENGTH 48' 10"

LOCKHEED L-188

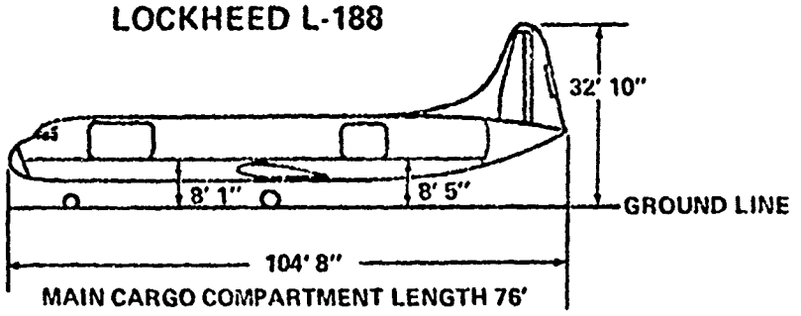

MAIN CARGO COMPARTMENT LENGTH 76'

LOCKHEED C-5A

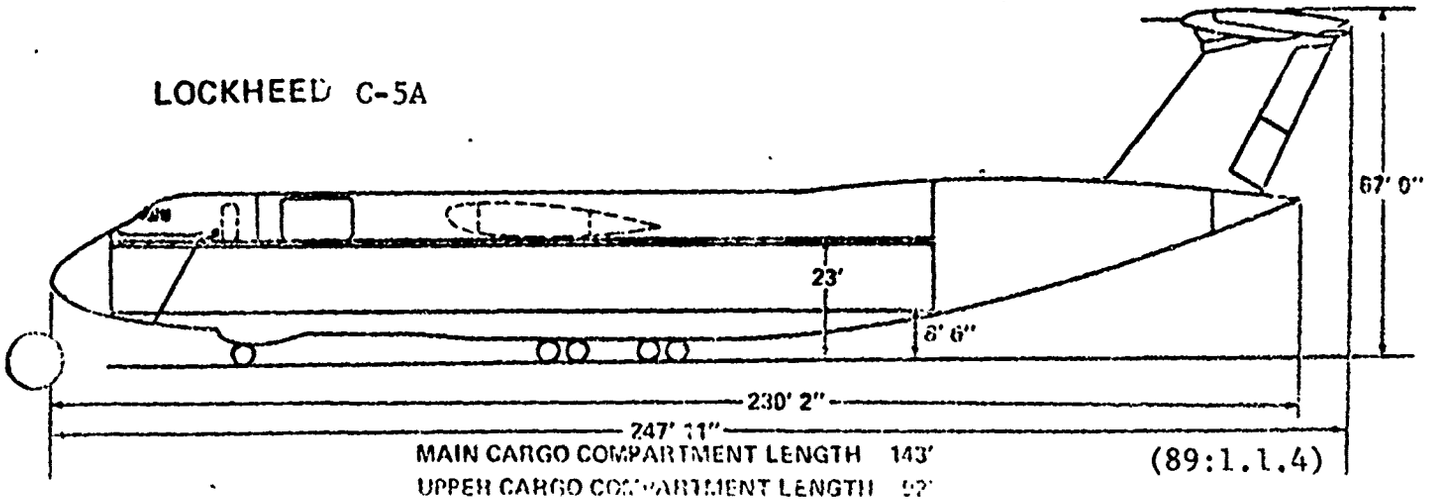

MAIN CARGO COMPARTMENT LENGTH 143'

UPPER CARGO COMPARTMENT LENGTH 92'

(89:1.1.4)

CROSS SECTION COMPARISON

COMPARTMENT DIMENSIONS ARE MAXIMUM.

BOEING 747C/F

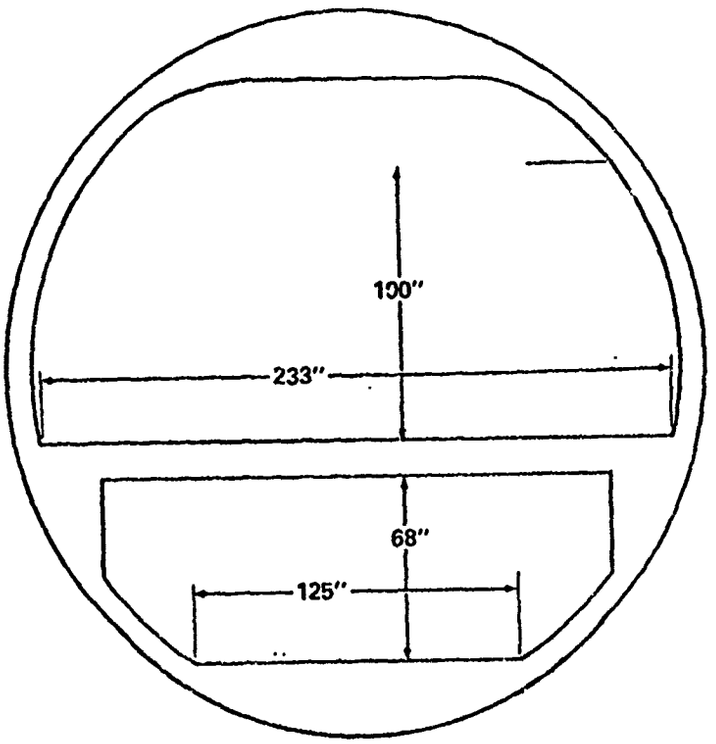

(89:1.2.2)

CROSS SECTION COMPARISON

COMPARTMENT DIMENSIONS ARE MAXIMUM.

DOUGLAS DC-9

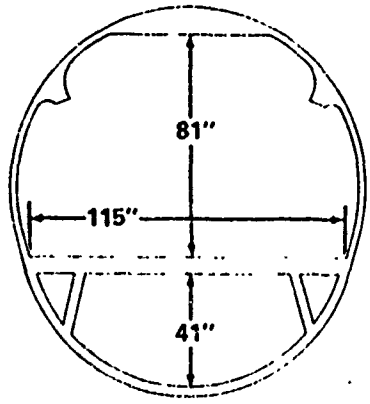

DOUGLAS DC-8

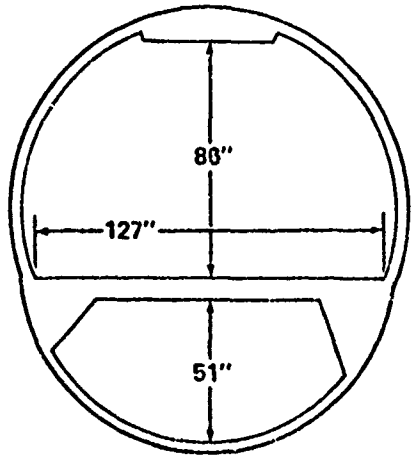

(89:1.2.3)

CROSS SECTION COMPARISON

COMPARTMENT DIMENSIONS ARE MAXIMUM.

LOCKHEED L-188

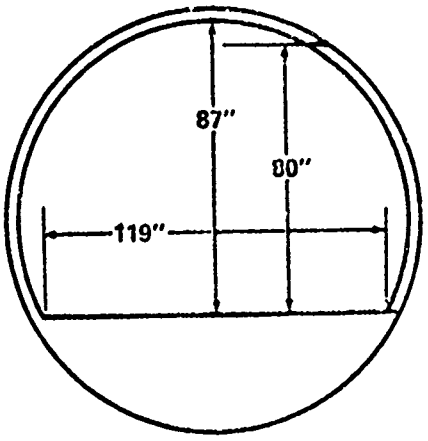

LOCKHEED L-100

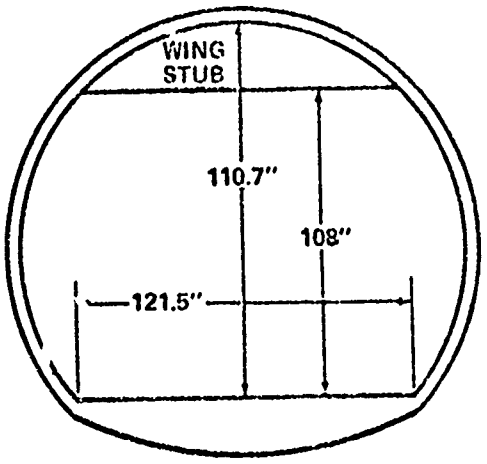

(89:1.2.4)

CROSS SECTION COMPARISON

COMPARTMENT DIMENSIONS ARE MAXIMUM.

LOCKHEED C-5A

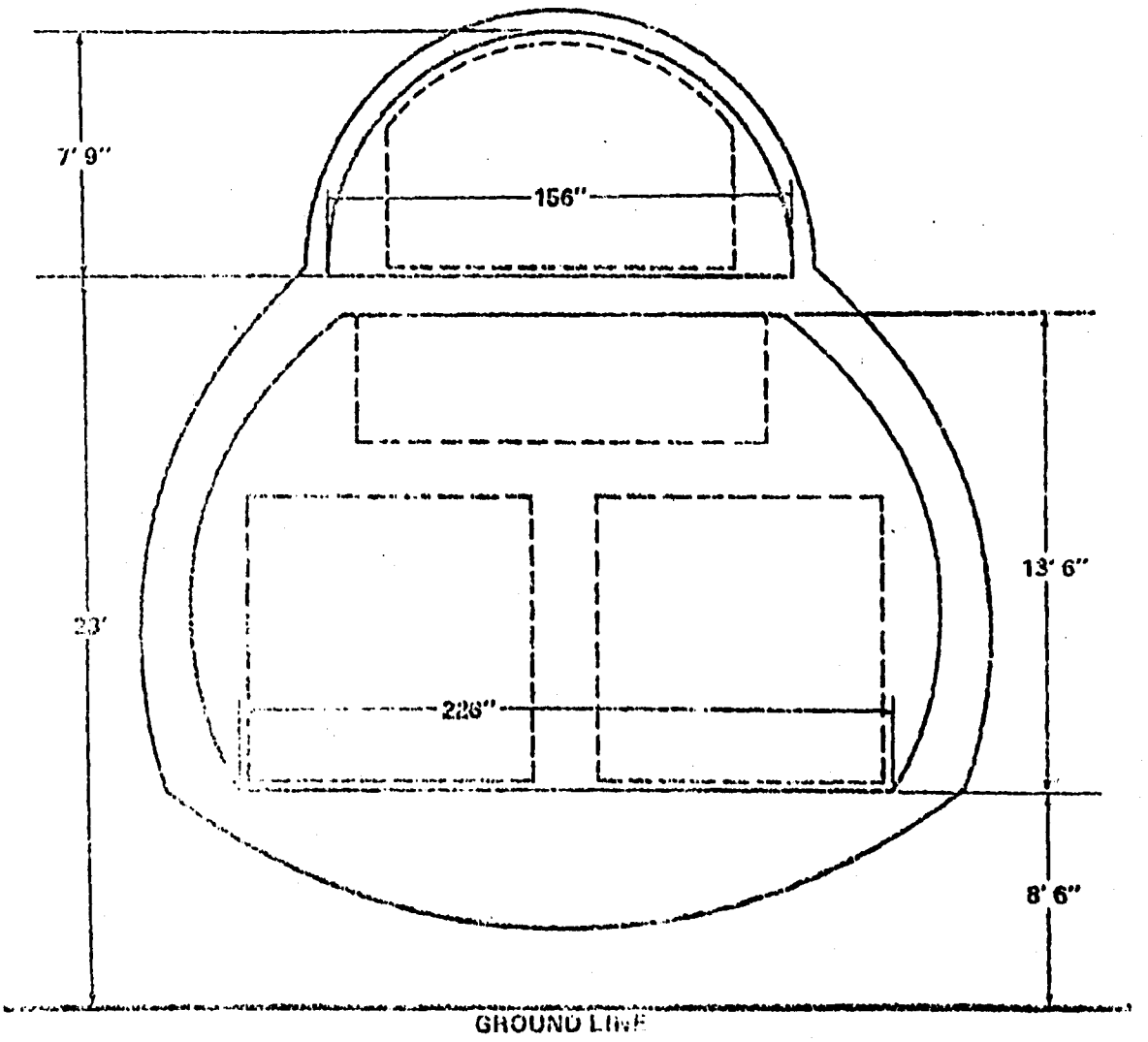

(89:1.2.5)

COMPARISON OF PALLET-CARRYING CAPABILITIES

AIRCRAFT TYPES	NUMBER OF PALLETS	PALLET DIMENSIONS			VOLUME EACH PALLET CUBIC FEET (APPROXIMATE)	TOTAL VOLUME
		LENGTH	WIDTH	HEIGHT		
737-200C	7	88"	108"	83"	365	2,555
HAT RACKS FOLDED	OR					
	7	88"	125"	83"	410	2870
727-100C	8	88"	108"	83"	365	2,920
HAT RACKS FOLDED	OR					
	8	88"	125"	83"	410	3,280
707-320C	13	88"	108"	84"	409	5,322
HAT RACKS REMOVED	OR					
	13	88"	125"	84"	456	5,930
747	(1) 28	125"	96"	96"	630	17,640
(1) MAIN DECK	(2) 15	60.5"	186"	64"	350	5,250
LOWER HOLD CONTAINERS						
DC-8-55F	13	88"	108"	82.1"	407	5,291
	OR					
	13	88"	125"	82.1"	453	5,889
DC-8-61F	18	88"	108"	82.1"	407	7,324
	OR					
	18	88"	125"	82.1"	459	8,262
DC-8-62F	14	88"	108"	82.1"	407	5,698
	OR					
	14	88"	125"	82.1"	459	6,426
DC-8-63F	18	88"	108"	82.1"	407	7,324
	OR					
	18	88"	125"	82.1"	459	8,262
DC-10-30C	22	88"	125"	86"	494	10,874
	OR					
	30	88"	108"	86"	408	12,240

(89:1.3.1)

COMPARISON OF PALLET-CARRYING CAPABILITIES

AIRCRAFT TYPES	NUMBER OF PALLETS	PALLET DIMENSIONS			VOLUME EACH PALLET CUBIC FEET (APPROXIMATE)	TOTAL VOLUME
		LENGTH	WIDTH	HEIGHT		
DC-9-10F	6	88"	108	75.5"	350	2,100
	OR 12	53"	88"	75.5"	174	2,088
	OR 4	88"	125"	75.5"	410	1,640
DC-9-30F	8	88"	108"	75.5"	350	2,800
	OR 16	53"	88"	75.5"	174	2,784
	OR 5	88"	125"	75.5"	410	2,050
	1	53"	88"	75.5"	174	174
DC-9-40F	8	88"	108"	75.5"	350	2,800
	1	53"	88"	75.5"	174	174
*1 PALLET ACROSS THE END	OR *17	53"	88"	75.5"	174	2,958
	OR 6	88"	125"	75.5"	410	2,460
L-100	5	125"	96"	96"	614	3,070
*1 TAIL GATE PALLET HEIGHT VARIES WITH TAIL CONTOUR OF AIRCRAFT.	*1	118"	88"		460	460
L-100-20	6	125"	96"	96"	614	3,684
	1	118"	88"		460	460
L-188C	6	88"	108"	77"	366	2,928
	1	53"	88"	75"	167	167
	OR 17	53"	88"	75"	167	2,839
C-5A						
UPPER DECK	16	88"	125"	86"	465	7,440
MAIN DECK	31	120"	96"	96"	605	18,755

(89:1.3.2)

CARGO DOOR SIZES

AIRCRAFT	MAIN DECK CARGO DOOR	LOWER HOLD		LOWER HOLD AFT BULK	UPPER DECK CARGO DOOR
		FORWARD	AFT		
BOEING					
737-200QC	•86" H x 134" W	35" H x 48" W	33" H x 48" W		
727-100QC	•86" H x 134" W	35" H x 48" W	35" H x 48" W 49" H x 48" W		
707-320C	•91" H x 134" W	50" H x 48" W	35" H x 30" W		
747F	★100" H x 136" W (B) 104" W (T)	66" H x 104" W	66" H x 104" W	47" H x 44" W	
DOUGLAS					
DC-8-55F	•85" H x 140" W				
DC-8-61F	•85" H x 140" W	(1) 36" H x 44" W	(2) 36" H x 44" W		
DC-8-62F	•85" H x 140" W	(1) 54" H x 63" W			
DC-8-63F	•85" H x 140" W				
DC-9-10QC	•81" H x 136" W	50" H x 53" W	50" H x 36" W		
DC-9-30QC	•81" H x 136" W	50" H x 53" W	50" H x 36" W		
DC-9-40QC	•81" H x 136" W	50" H x 53" W	50" H x 36" W		
DC-10-30C	•102" H x 140" W	66" H x 70" W 66" H x 104" W	66" H x 70" W	UNK.	
LOCKHEED					
L-100	•108" H x 121" W				
L-100-20	•108" H x 121" W				
L-188	•80" H x 140" W				
C-5A	▲13'6" H x 19'0" W (B) 13'2" W (T)				(2) – 94" H x 120" W

(89:1.6.1)

• Side Loading
▪ Tail Loading
★ Nose Loading

L-188 – Has optional aft door on main deck. – 78" H x 98" W
(B) – Bottom
(T) – Top
H – Height
W – Width

APPENDIX B

The graphs presented in this section portray the comparative factors affecting the mechanical schedule reliability for the B-747B. The following is a brief description of each chart.

1. Airline Service Statistical Summary (Illustration 1)

2. Mechanical Schedule Reliability (Illustration 2,3)

3. Severity Index in Computing Mechanical Schedule Interruptions (Illustration 4,5,6)

4. Utilization Vs Reliability (Illustration 7)

747 AIRLINE SERVICE STATISTICAL SUMMARY
(1970 & 1971)

AIRLINE OPERATOR	TOTAL LANDINGS	FLIGHT HOURS	HOURS DAILY UTILIZATION	* AVERAGE DELAY IN MINUTES	** SCHEDULE INTERRUPTIONS	REVENUE DEPARTURES	24-MONTH CUMULATIVE % SCHEDULE RELIABILITY	LAST 3 MONTHS CUMULATIVE % SCHEDULE RELIABILITY
A	45,053	137,980	9.22	96.6	3023	29,131	89.6	93.2
B	26,210	89,490	10.12	63.6	1350	16,504	91.8	93.6
C	20,188	59,132	8.75	59.4	680	16,093	95.8	97.7
D	6,432	19,796	9.46	93.6	308	3,996	92.3	96.4
E	6,574	22,671	8.55	114.0	368	3,855	90.5	92.6
F	16,333	45,826	7.77	81.0	694	11,258	93.8	94.7
G	8,257	19.252	10.55	45.6	345	5,386	93.6	95.6
H	4,316	22,469	8.44	102.0	169	3,488	95.1	96.5
I	3,499	17,204	10.37	112.8	241	2,686	91.0	93.3
J	12,921	40,562	8.63	19.2	646	8,844	92.7	93.0
K	3,034	7,621	8.32	59.4	110	2,550	95.7	94.4
L	7,806	9,636	3.44	114.0	180	2,145	91.6	91.6
M	7,532	13,089	9.09	77.4	275	6,722	95.9	96.7
N	1,819	6,229	7.14	82.8	56	1,420	96.1	97.7
O	913	6,032	7.60	21.6	48	840	94.3	96.7
P	805	4,843	13.45	97.8	16	676	97.6	97.7
Q	3,598	8,181	8.66	78.6	128	2,786	95.4	97.0
R	4,205	10,524	8.89	132.6	74	1,808	95.9	96.5
S	2,552	6,427	10.40	95.4	42	1,195	96.5	98.0
T	1,180	3,392	9.35	136.2	21	435	95.2	96.2
U	2,343	5,117	6.36	79.8	53	1,255	95.8	95.0
V	1,639	2,962	5.05	75.6	31	886	96.5	96.6
W	2,684	4,477	8.39	124.8	53	1,297	95.9	96.9
X	806	1,872	6.81	127.2	33	765	95.7	94.8
Y	803	2,153	8.26	355.8	13	369	96.5	95.4
Z	2,995	1,882	4.83	90.0	22	276	92.0	91.9
AA	865	481	5.60	72.0	2	25	92.0	92.0
FLEET	196,086	569,300	8.72	84.0	8981	126,691	92.9	94.8

* AVERAGE OF ALL MECHANICAL DELAYS > 0' CHARGEABLE TO AIRPLANE

** CANCELLATIONS, GROUND TURNBACKS, AIR TURNBACKS, DIVERTED LANDINGS, AND DELAYS >15'

(86:6)

747 MECHANICAL SCHEDULE RELIABILITY

24 MONTHS COMMERCIAL OPERATION THROUGH 12/31/71

(DELAYS > 15')

AIRLINE	DELAYS	CANCELLATIONS	GROUND TURNBACKS	AIR TURNBACKS	DIVERTED LANDINGS	SCHEDULE INTERRUPTIONS	REVENUE DEPARTURES	% RELIABILITY
A	2701	96	65	100	61	3023	29,131	89.6
B	1095	163	28	51	13	1350	16,504	91.8
C	581	37	26	28	8	680	16,093	95.8
D	246	43	2	13	4	308	3,996	92.3
E	322	25	6	13	2	368	3,855	90.5
F	579	60	29	20	6	694	11,258	93.8
G	276	62	2	5	-	345	5,386	93.6
H	159	1	2	7	-	169	3,488	95.1
I	191	28	5	14	3	241	2,686	91.0
J	542	53	15	28	8	646	8,844	92.7
K	95	3	8	3	1	110	2,550	95.7
L	158	8	8	5	1	180	2,145	91.6
M	237	26	2	7	3	275	6,722	95.9
N	52	2	-	2	-	56	1,420	96.1
O	38	5	1	3	1	48	840	94.3
P	13	2	1	-	-	16	676	97.6
Q	103	15	2	7	1	128	2,786	95.4
R	65	4	4	1	-	74	1,808	95.9
S	36	4	-	2	-	42	1,195	96.5
T	18	2	-	1	-	21	435	95.2
U	48	2	2	1	-	53	1,255	95.8
V	28	1	-	1	1	31	886	96.5
W	47	2	4	-	-	53	1,297	95.9
X	31	-	1	1	-	33	765	95.7
Y	10	1	-	2	-	13	369	96.5
Z	22	-	-	-	-	22	276	92.0
AA	2	-	-	-	-	2	25	92.0
CUMULATIVE	7695	645	213	315	113	8981	126,691	92.9

(86:25)

747 MECHANICAL RELIABILITY
(COMMERCIAL FLEET OPERATION)
(DELAYS > 15')

			24 MONTHS 1970 & 1971	3 MONTHS 10/1/71-12/31/71
BLOCK-TO-BLOCK RELIABILITY:				
(PROBABILITY OF NO GROUND TURNBACKS, AIR TURNBACKS, OR DIVERTED LANDINGS AFTER AIRPLANE DEPARTURE FROM BLOCK)	100-(213+315+113)/126,691	=	99.57%	
	100-(129+59+20)/30,968	=		99.33%
PREFLIGHT RELIABILITY:				
(PROBABILITY OF DISPATCHING AIRPLANE WITHOUT A DELAY OR CANCELLATION)	100-(7695+645)/126,691	=	93.42%	
	100-(1290+98)/30,968	=		95.52%
IN-FLIGHT RELIABILITY:				
(PROBABILITY OF NO AIR TURNBACKS OR DIVERTED LANDINGS DURING FLIGHT)	100-(315+113)/126,691	=	99.66%	
	100-(59+20)/30,968	=		99.74%
SCHEDULE RELIABILITY:				
(PROBABILITY OF STARTING AND COMPLETING A SCHEDULED FLIGHT WITHOUT A DELAY, CANCELLATION, GROUND TURNBACK, AIR TURNBACK, OR DIVERTED LANDING)	100-(7695+645+213+315+113)/126,691	=	92.91%	
	100-(1290+98+129+59+20)/30,968	=		94.85%

(86:27)

SEVERITY INDEX

A NEW RATING METHOD HAS BEEN UTILIZED FOR THE 747 PROGRAM THAT FIXES ITEM RESPONSIBILITY COMMENSURATE WITH AIRLINE OPERATIONAL AND MAINTENANCE COST. SEVERITY INDEX IS A RATING FOR AN AIRPLANE COMPONENT OR SYSTEM THAT ASSESSES THE SPECIFIC COMPONENT OR SYSTEM BY RECOGNIZING THE NUMBER, TYPE, AND FREQUENCY OF INTERRUPTIONS TO SCHEDULED FLIGHT DEPARTURES, AS WELL AS THE LENGTH OF DELAYS, CHARGED TO THE COMPONENT OR SYSTEM BEING EVALUATED. THE SAME SEVERITY VALUE IS ASSIGNED FOR DELAYS EXCEEDING 210 MINUTES AS FOR CANCELLATIONS IN ORDER TO SMOOTH OUT VARIATIONS IN OPERATING PROCEDURES BETWEEN AIRLINES. SOME COMPANIES WILL CANCEL A SCHEDULED FLIGHT RATHER THAN TAKE A LONG-TIME DELAY IN CONTRAST TO OTHERS THAT WILL ACCEPT A LONG-TIME DELAY IN PREFERENCE TO A CANCELLATION.

TOTAL DELAY TIME (MINUTES)	SEVERITY INDEX
0 - 15	0.0
16 - 45	0.1
46 - 90	0.2
91 - 150	0.5
151 - 210	1.0
211 & OVER	2.0
CANCELLATIONS	2.0
AIR TURNBACKS	5.0
FLIGHT DIVERSIONS	5.0

747 MECHANICAL SCHEDULE INTERRUPTIONS
(1970 & 1971 COMMERCIAL OPERATION)

ATA	SYSTEM	SCHEDULE INTERRUPTIONS >15'	SCHEDULE INTERRUPTIONS > 0'	SCHEDULE INTERRUPTION RANK	% TOTAL INTERRUPTIONS	SEVERITY INDEX	AVERAGE SEVERITY INDEX	SEVERITY INDEX RANK	% TOTAL SEVERITY
21	AIR CONDITIONING	334.25	412.36	10	3.72	124.58	.302	17	1.83
22	AUTOPILOT	28.17	37.17	31	0.31	13.46	.362	31	0.20
23	COMMUNICATIONS	156.84	243.25	22	1.75	41.83	.172	27	0.61
24	ELECTRICAL POWER	231.78	265.16	12	2.58	130.66	.493	16	1.92
25	EQUIPMENT & FURNISHINGS	210.23	330.17	16	2.34	50.25	.152	25	0.74
26	FIRE PROTECTION	163.35	195.91	20	1.82	135.54	.692	14	1.98
27	FLIGHT CONTROLS	590.86	642.78	4	6.58	442.59	.689	3	6.50
28	FUEL	506.01	624.16	5	5.64	249.03	.399	9	3.65
29	HYDRAULICS	488.97	531.66	6	5.44	363.40	.684	4	5.35
30	ICE & RAIN PROTECTION	52.62	60.50	29	0.59	29.46	.487	28	0.43
31	INSTRUMENTS	30.25	35.75	30	0.34	13.78	.385	30	0.20
32	LANDING GEAR	730.07	824.92	2	8.14	515.81	.625	2	7.57
33	LIGHTS	138.12	180.25	23	1.54	46.19	.256	26	0.68
34	NAVIGATION	410.93	549.83	7	4.58	157.65	.287	12	2.31
35	OXYGEN	16.00	22.00	32	0.18	5.30	.241	33	0.08
36	PNEUMATICS	192.26	207.75	19	2.14	133.99	.645	15	1.97
38	WATER & WASTE	55.55	76.92	28	0.62	18.71	.243	29	0.27
49	AUXILIARY POWER UNIT	200.19	290.41	18	2.23	67.40	.232	22	1.00
51	STRUCTURES - GENERAL	1.00	1.00	35	0.01	0.50	.500	35	0.01
52	DOORS	370.91	583.00	8	4.13	160.24	.275	11	2.35
53	FUSELAGE	9.50	12.50	33	0.11	6.85	.548	32	0.10
54	NACELLES & PYLONS	7.50	8.50	34	0.08	4.35	.512	34	0.06

(86:46)

747 MECHANICAL SCHEDULE INTERRUPTIONS (CONT'D)
(1970 & 1971 COMMERCIAL OPERATION)

ATA	SYSTEM	SCHEDULE INTERRUPTIONS >15'	SCHEDULE INTERRUPTIONS >0'	SCHEDULE INTERRUPTION RANK	% TOTAL INTERRUPTIONS	SEVERITY INDEX	AVERAGE SEVERITY INDEX	SEVERITY INDEX RANK	% TOTAL SEVERITY
55	STABILIZERS	1.00	1.00	36	0.01	0.50	.500	36	0.01
56	WINDOWS	159.76	166.33	21	1.78	254.57	1.531	8	3.74
57	WINGS	92.50	96.25	26	1.03	77.05	.801	21	1.13
71	ENGINES - GENERAL	121.66	138.33	24	1.35	103.43	.748	19	1.51
72	ENGINES	1375.71	1496.87	1	15.32	1998.53	1.335	1	29.34
73	ENGINE FUEL & CONTROL	340.48	360.57	9	3.79	345.57	.958	5	5.07
74	ENGINE IGNITION	228.97	241.86	13	2.55	92.10	.381	20	1.35
75	ENGINE AIR	272.56	298.83	11	3.03	220.07	.736	10	3.23
76	ENGINE CONTROLS	87.23	94.00	27	0.97	66.75	.710	23	0.98
77	ENGINE INDICATING	221.21	259.12	14	2.46	148.21	.572	13	2.18
78	EXHAUST	631.94	710.75	3	7.04	341.06	.480	6	5.01
79	ENGINE OIL	205.80	228.25	17	2.29	289.41	1.268	7	4.25
80	ENGINE STARTING	222.69	250.60	15	2.48	108.67	.434	18	1.60
82	WATER INJECTION	93.33	101.08	25	1.04	53.51	.529	24	0.79
	AIRPLANE	8,981	10,609		100.00	6,811	.644		100.00

(86:47)

747 FLEET

UTILIZATION VS RELIABILITY

(2 YEARS AIRLINE SERVICE THROUGH 12/31/71)

MONTH AFTER START OF REVENUE OPERATION	AVERAGE HOURS DAILY UTILIZATION PER AIRPLANE	PERCENT MECHANICAL SCHEDULE RELIABILITY
1	11.53	90.2
2	5.75	89.7
3	8.33	86.1
4	9.12	85.8
5	7.75	83.8
6	9.17	82.3
7	9.70	84.4
8	9.80	86.5
9	8.45	88.6
10	7.20	91.1
11	6.39	91.5
12	7.96	90.8
13	7.98	91.3
14	7.75	93.5
15	8.13	94.4
16	8.22	94.4
17	8.92	95.1
18	9.86	94.2
19	9.95	93.5
20	9.81	94.4
21	9.24	94.5
22	8.56	95.0
23	8.55	95.0

(86:56)

APPENDIX C

This section compares graphically the C-141, C-5A and the 747B/C/F with respect to cargo compartment size and runway restrictions. The following is a brief description of each chart.

1. Aircraft Overlay of C-141, C-5A and 747. (Illustration 1)

2. Main Cargo Compartment Floor Area Comparison (Illustration 2)

3. Cabin Cross Sections (Illustration 3)

4. Runway Restrictions (Illustration 4,5)

C-141/747C-F/C-5A COMPARISON

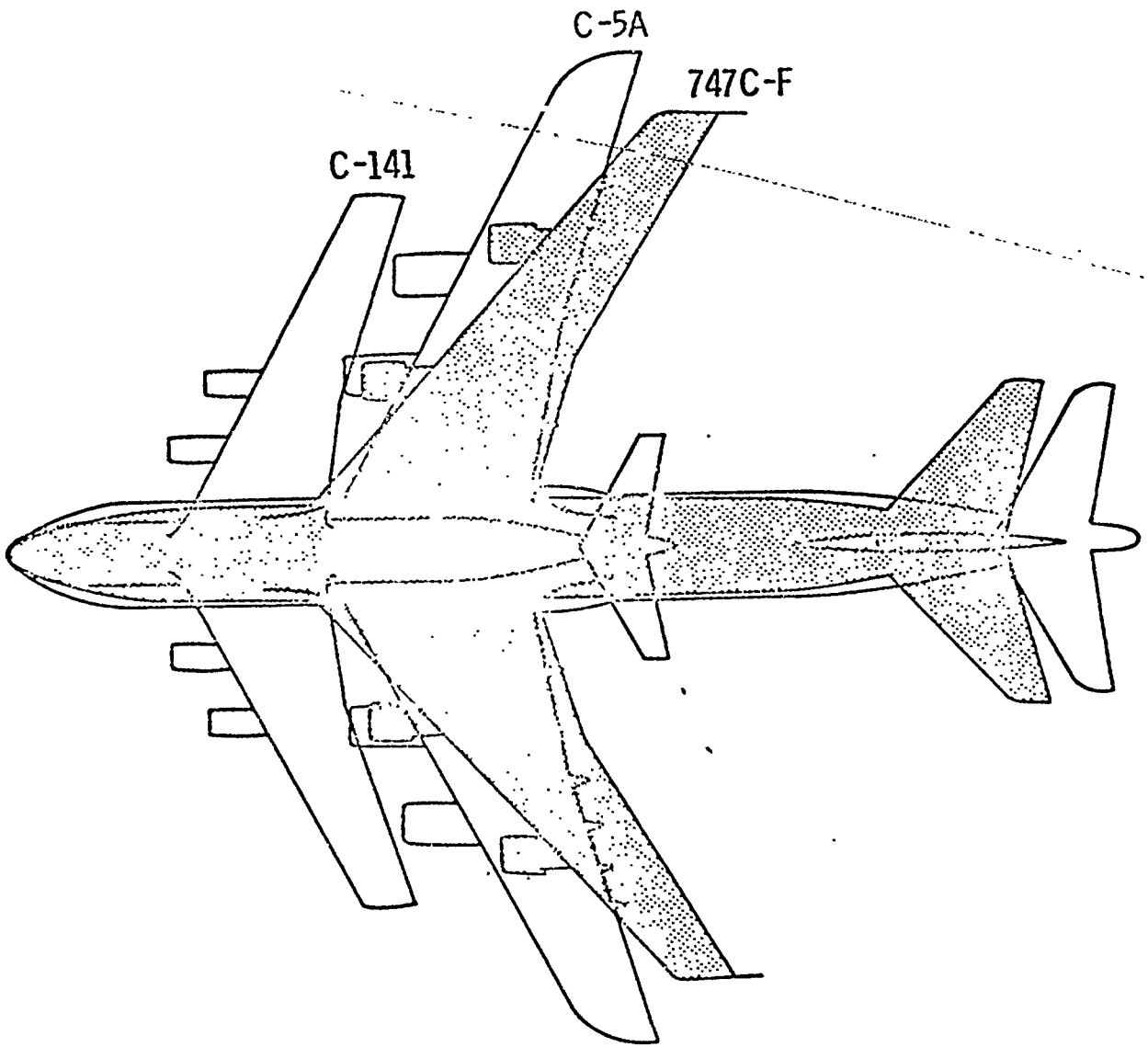

(126:22)

MAIN CARGO COMPARTMENT FLOOR AREA COMPARISON

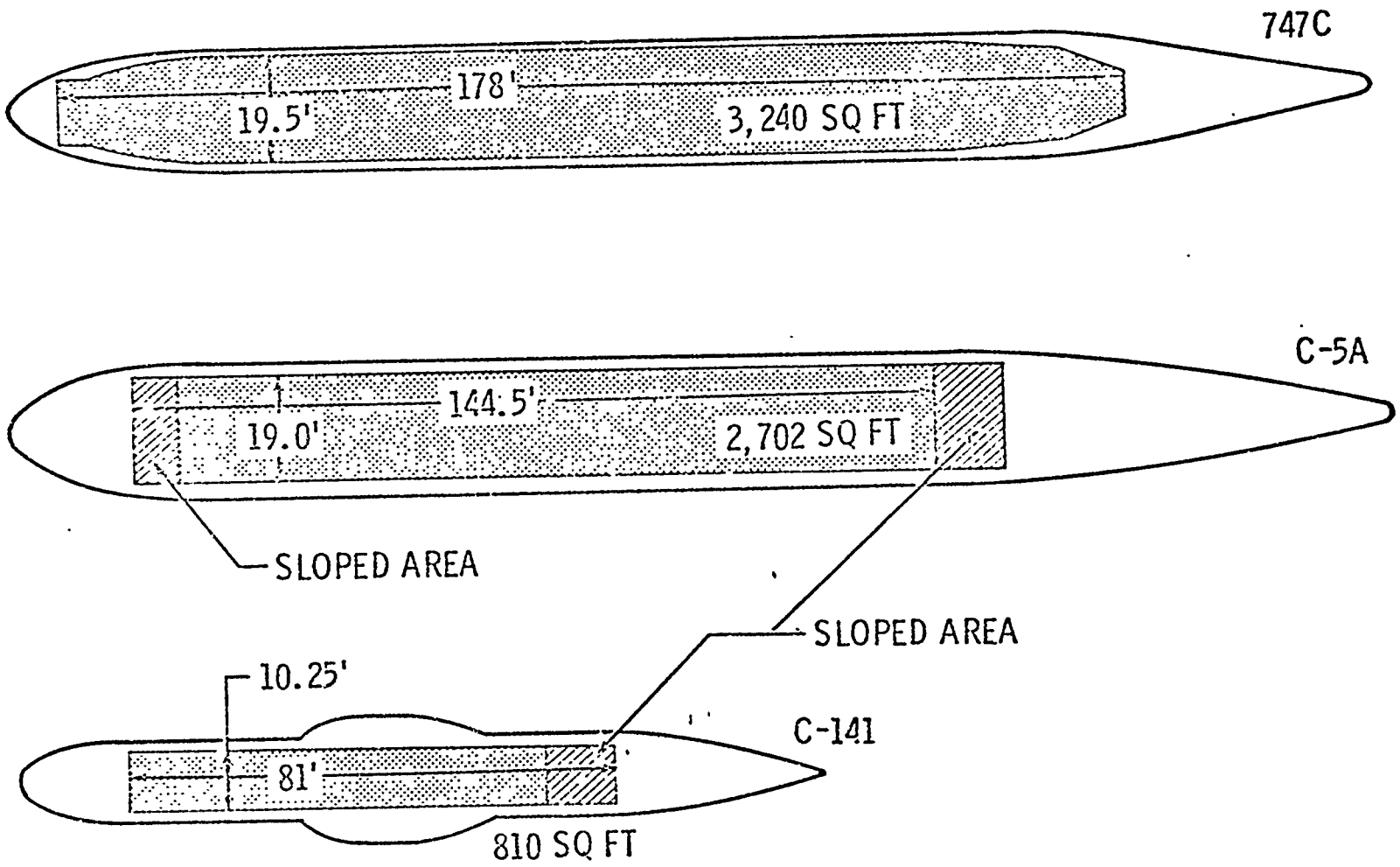

(126:23)

Cabin Cross Sections

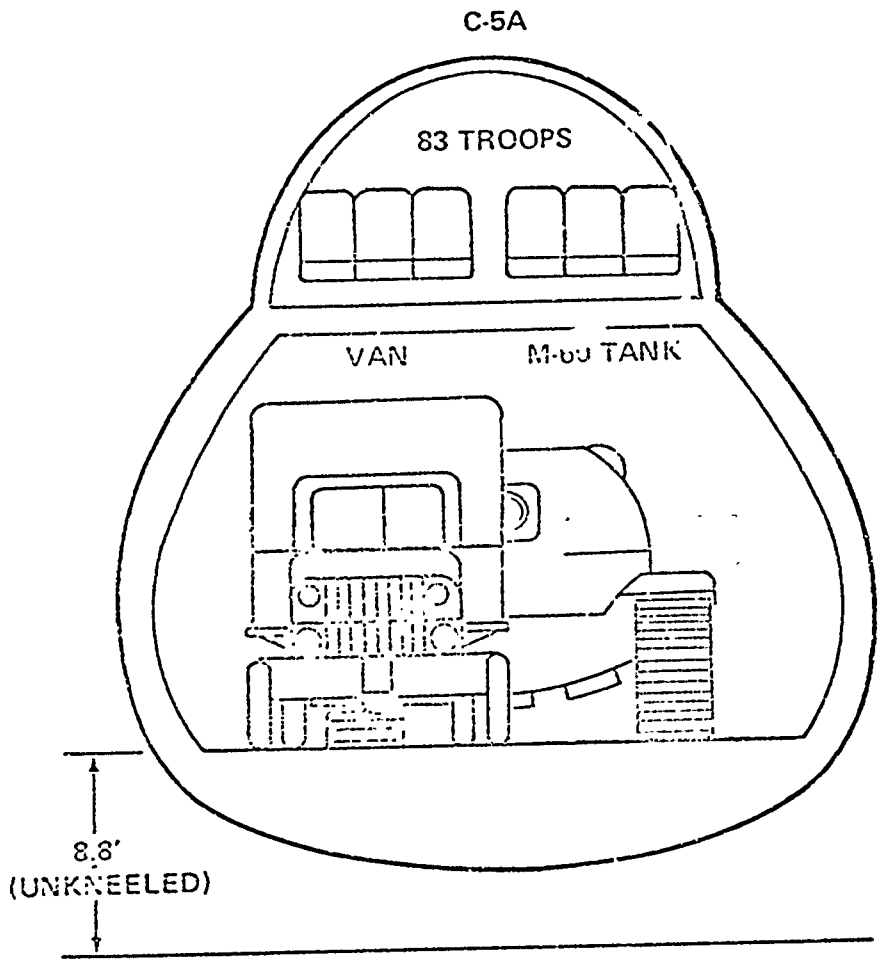

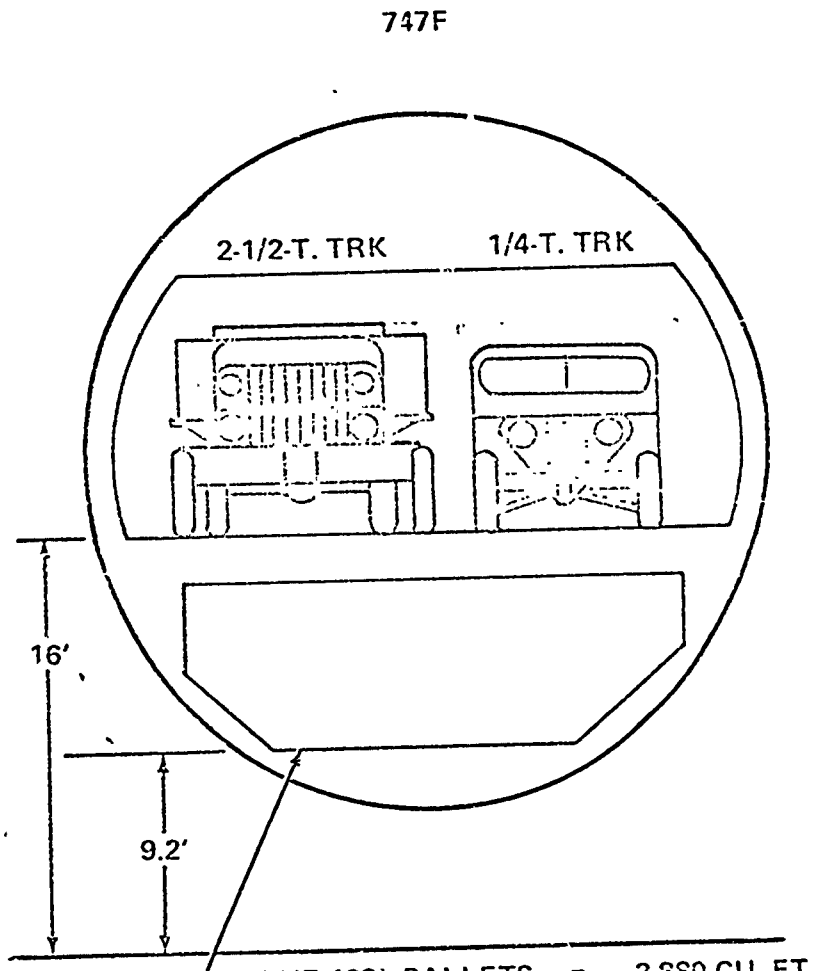

NINE 463L PALLETS	=	2,880 CU. FT.
BULK CARGO	=	800 CU. FT.
*SPACE UTILIZED	=	3,680 CU. FT.

*6,050 CU. FT. WITH COMMERCIAL CONTAINERS

(126:24)

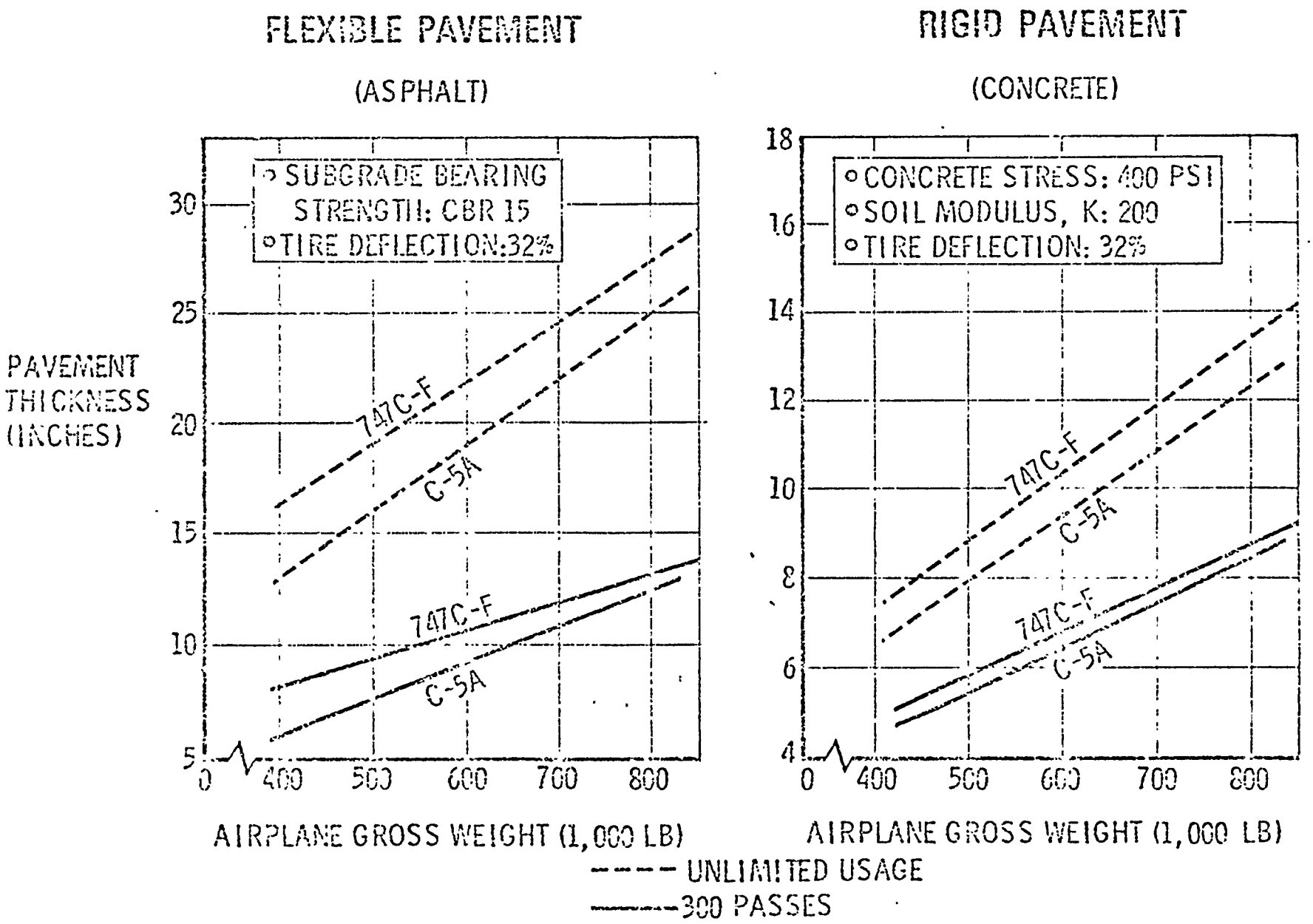
FLEXIBLE PAVEMENT
(ASPHALT)
RIGID PAVEMENT
(CONCRETE)
SUBGRADE BEARING STRENGTH: CBR 15
TIRE DEFLECTION: 32%
CONCRETE STRESS: 400 PSI
SOIL MODULUS, K: 200
TIRE DEFLECTION: 32%
PAVEMENT THICKNESS (INCHES)
747C-F
C-5A
747C-F
C-5A
747C-F
C-5A
747C-F
C-5A
AIRPLANE GROSS WEIGHT (1,000 LB)
AIRPLANE GROSS WEIGHT (1,000 LB)
UNLIMITED USAGE
300 PASSES

(126:25)

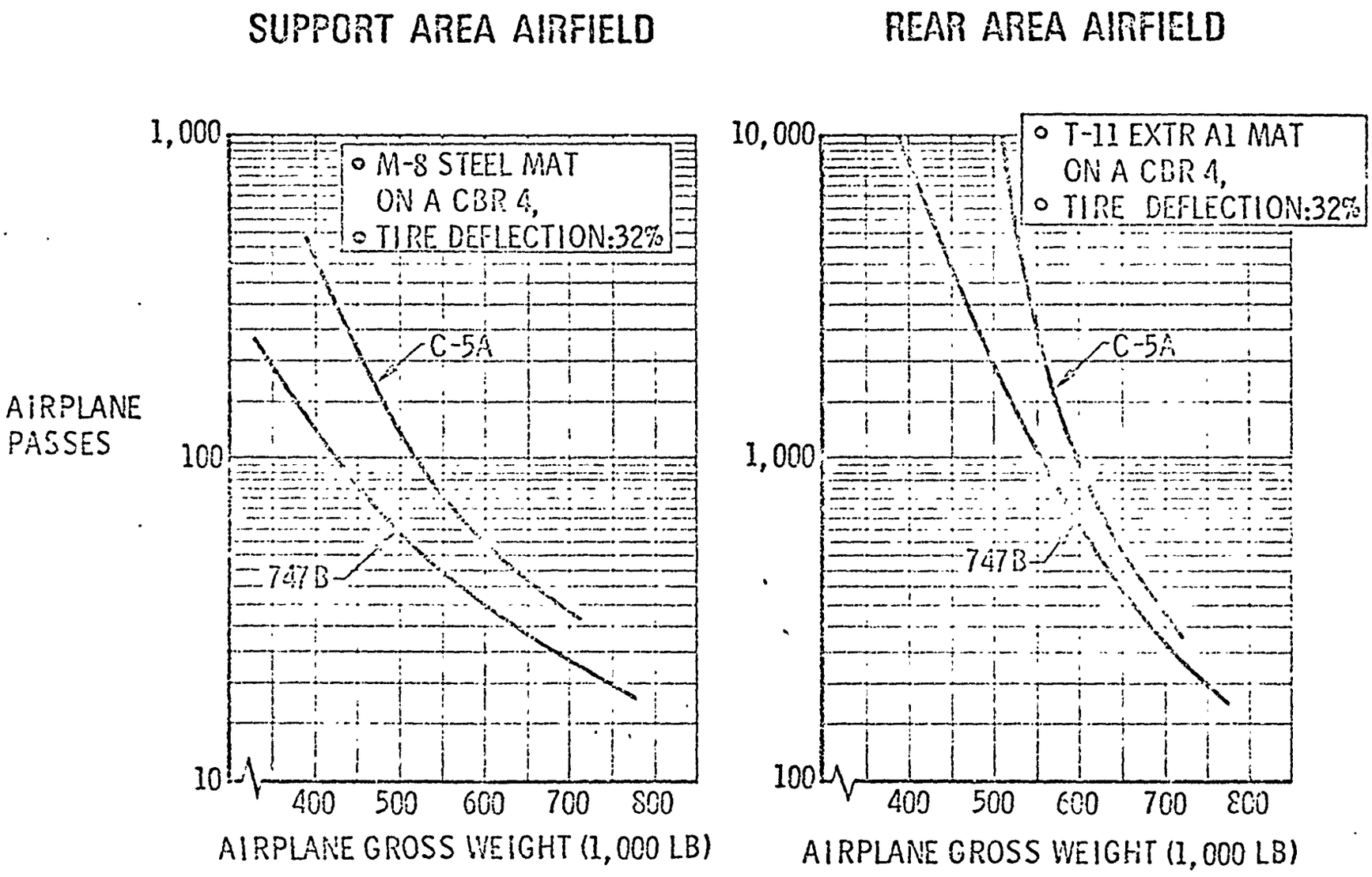
SUPPORT AREA AIRFIELD
REAR AREA AIRFIELD
AIRPLANE PASSES
1,000
100
10
10,000
1,000
100
M-8 STEEL MAT ON A CBR 4,
TIRE DEFLECTION:32%
T-11 EXTR Al MAT ON A CBR 4,
TIRE DEFLECTION:32%
C-5A
747B
400
500
600
700
800
AIRPLANE GROSS WEIGHT (1,000 LB)

(126:26)

APPENDIX D

This section provides the reader with additional information on the physical characteristics of the 747C/F. It concentrates on the cargo capabilities of the aircraft. The following is a brief description of each chart.

1. Main Cargo Deck Tiedown Grid
   (Illustration 1,2)

2. Cargo Module Interchangeability
   (Illustration 3)

3. 463L Pallet Arrangement
   (Illustration 4)

4. Military Equipment Loads
   (Illustration 5,6)

5. Cargo Compartment Description
   (Illustration 7,8)

6. Cargo Door Arrangement
   (Illustration 9)

7. Payload and Range
   (Illustration 10)

8. Performance Characteristics
   (Illustration 11)

MAIN CARGO DECK TIEDOWN GRID
(PALLET LOCK AND RESTRAINT SYSTEM)

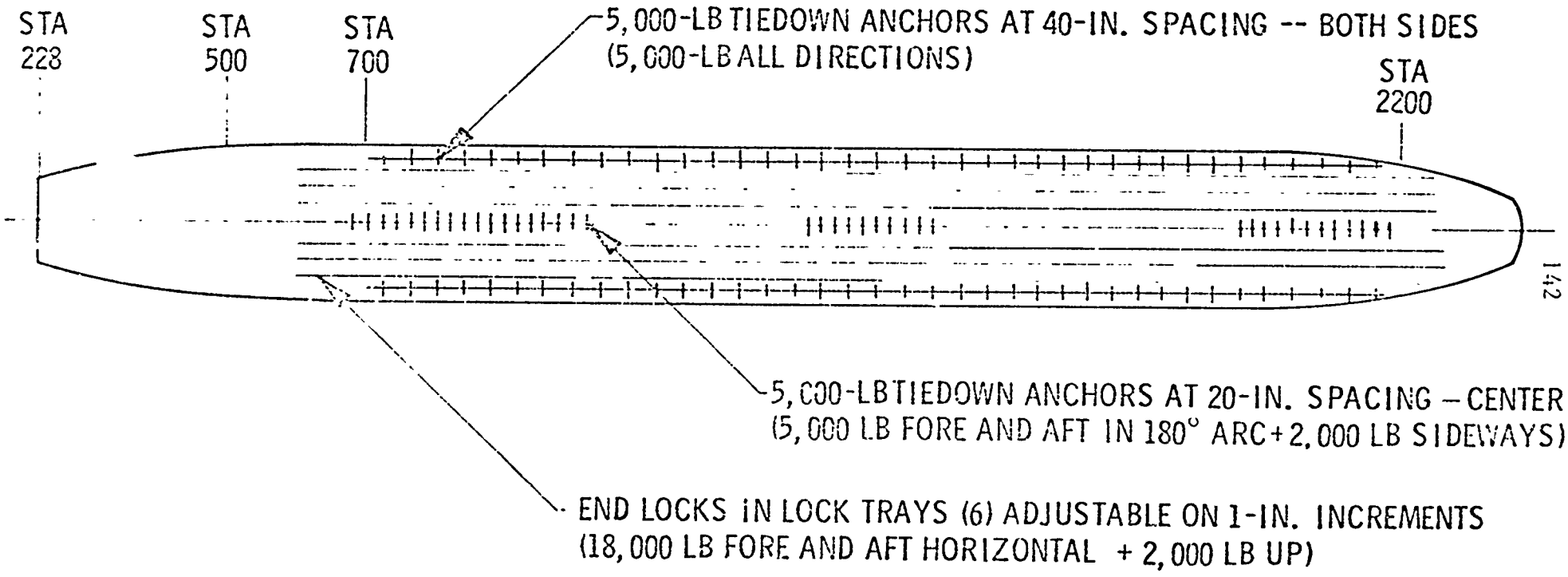

(126:42)

VEHICULAR DRIVE – ON/OFF AND TIEDOWN OPTION USING 463L PALLETS

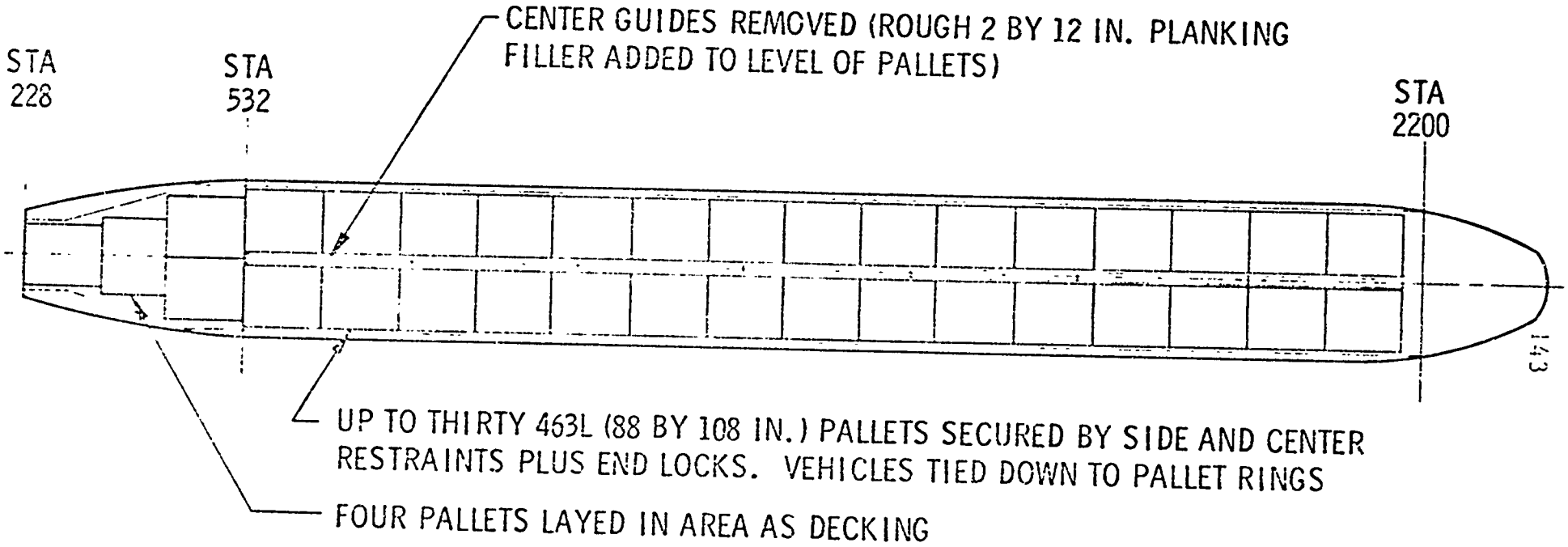

(126:44)

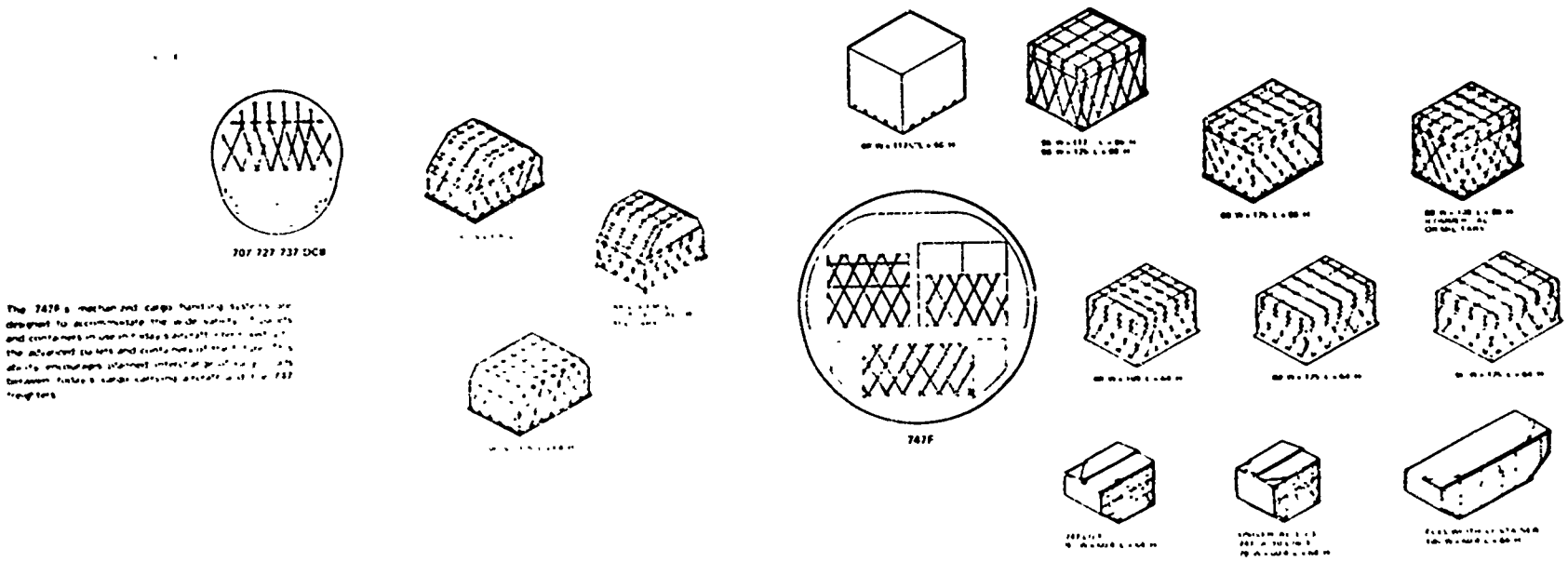

(87:36) (87:37)

MAC ARRANGEMENT

463L PALLETS

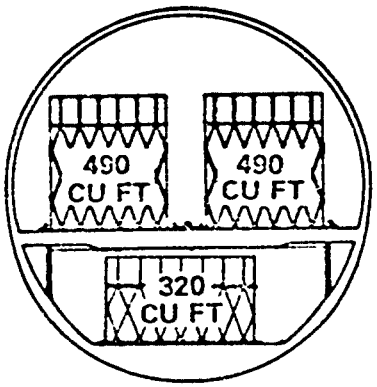

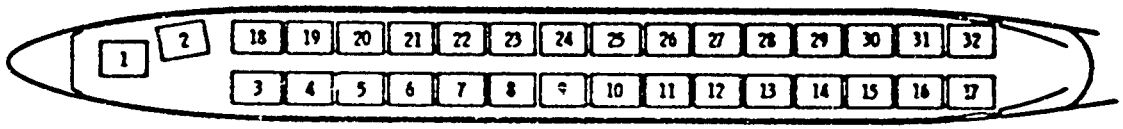

32 - 88 x 108 (463L) PALLETS AT 490 CU FT

	UNITS	VOL CU FT
UPPER DECK	32	15,156
LOWER LOBE	9	2,880
BULK CARGO	—	800
TOTAL CAPACITY		18,936

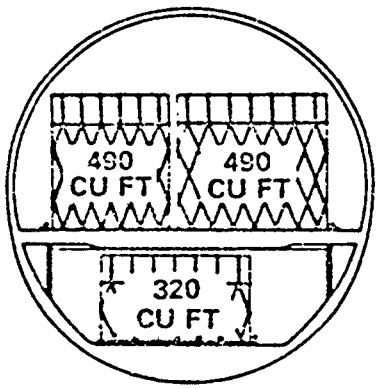

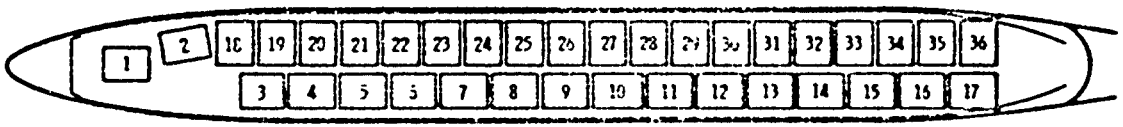

36 - 88 x 108 (463L) PALLETS AT 490 CU FT
ADDITIONAL HARDWARE
REQUIRED

	UNITS	VOL CU FT
UPPER DECK	36	17,640
LOWER LOBE	9	2,880
BULK CARGO	—	800
TOTAL CAPACITY		21,320

(130:34)

TYPICAL 747F MILITARY EQUIPMENT LOADS

TYPE	LOADED WEIGHT LBS	TOTAL UNIT LOAD WEIGHT [1]	NUMBER OF UNIT LOADS		TOTAL	TOTAL WEIGHT LOADED	LBS
			MAIN DECKS	LOWER DECKS			
M113 APC	19,200	20,100	8	0	8	160,800	
M151 ¼ TON	3,000	3,330	3	13	16	52,980	
M35 2½ TON	15,000	16,080	2	0	2	32,160	
M715 1¼ TON	7,000	7,640	1	0	1 (27)	7,640	253,580
M35 2½ TON	15,000	16,080	10	0	10	180,800	
M151 ¼ TON	3,000	3,330	2	13	15 (25)	51,150	231,950
463 L PALLETS	MAIN DECK 5000 [2] LWR DECK 3330	5,350 / 3680	36	9	45	231,720	

NOTE: [1] INCLUDES PALLET, PLANKING, CHOCKS, TIE-DOWN CHAIN WEIGHTS

[2] ASSUMED BULK CARGO DENSITY OF 10 LB/FT^3

(130:31)

747 AIR-TRANSPORTABLE SUMMARY

MILITARY VEHICLES
(NON-OUTSIZE)

DIVISION TOTALS			PERCENTAGE AIR-TRANSPORTABLE
TYPE DIVISION [1]	VEHICLE COUNT	VEHICLE WEIGHT (TONS)	BY COUNT
ARMORED [2]	13,245	51,807	92
INFANTRY [3]	14,563	51,311	96
MECHANIZED [4]	13,165	51,850	92

[1] REF – DEPT OF ARMY, AIR FREIGHT LIMITATIONS REPORT, MARCH 2, 1970
[2] DIVISION BASE PLUS 6 TANK, 5 MECHANIZED BN
[3] DIVISION BASE PLUS 8 INFANTRY, 2 TANK BN
[4] DIVISION BASE PLUS 7 MECHANIZED, 3 TANK BN

NOTE: NON-OUTSIZE VEHICLES – THOSE NOT RESTRICTED TO C-5A

The table shows the percentage by count and weight of the non-outsize vehicles in Army divisions that can be carried by the 747F. These numbers are roughly equivalent to what the C-141 can accommodate with the obvious exception that a larger number can be carried per load in the 747F. For example, the C-141 will carry three 2½ ton trucks versus the 747F with 10 2½ ton trucks plus 15 jeeps. (126:20)

compartment overall volumes and areas

NOTE: ALL VOLUMES ARE GROSS "WATER" VOLUMES AND DO NOT INCLUDE VOLUMES BETWEEN FRAMES.

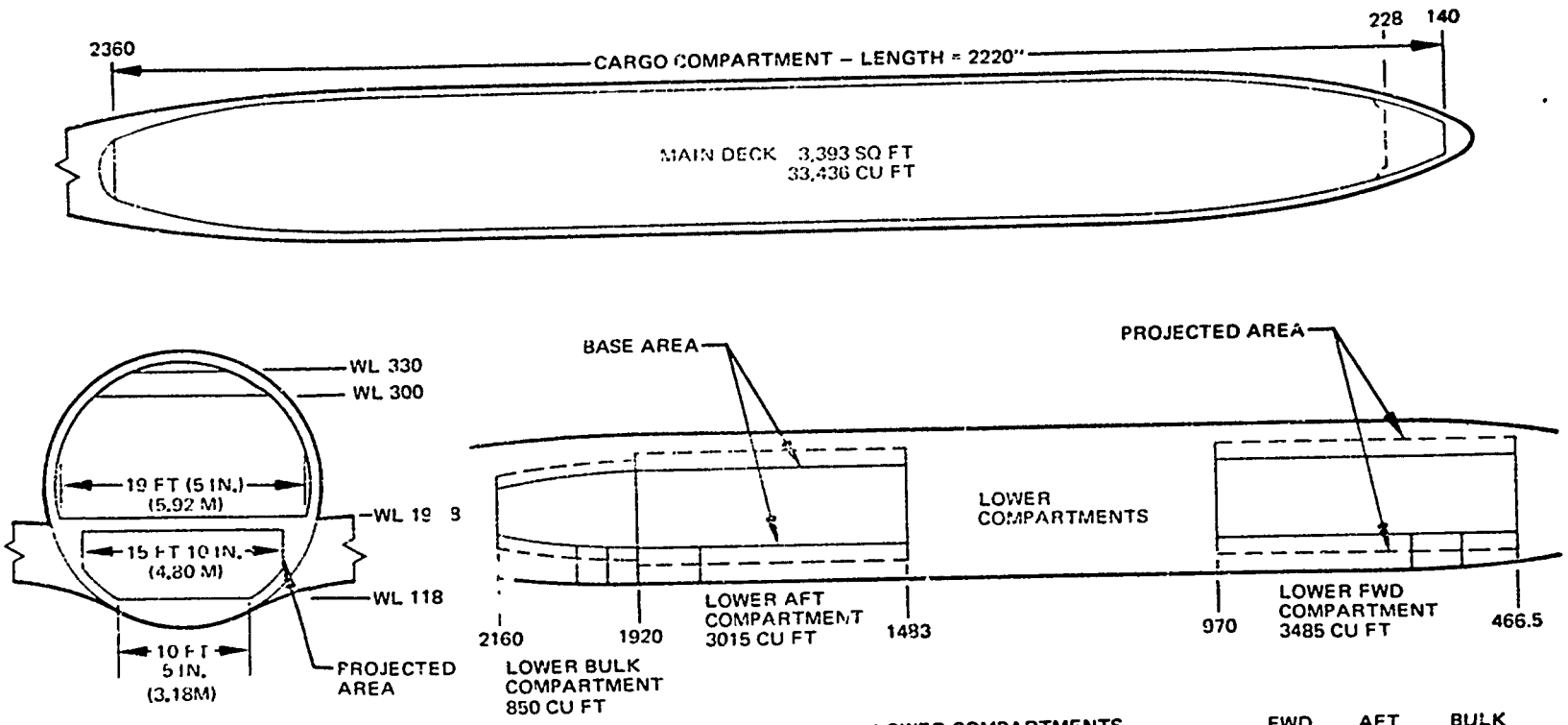

LOWER COMPARTMENTS	FWD	AFT	BULK
BASE AREA (SQ FT)	432	380	184
PROJECTED AREA (SQ FT)	672	583	199

(87:9)

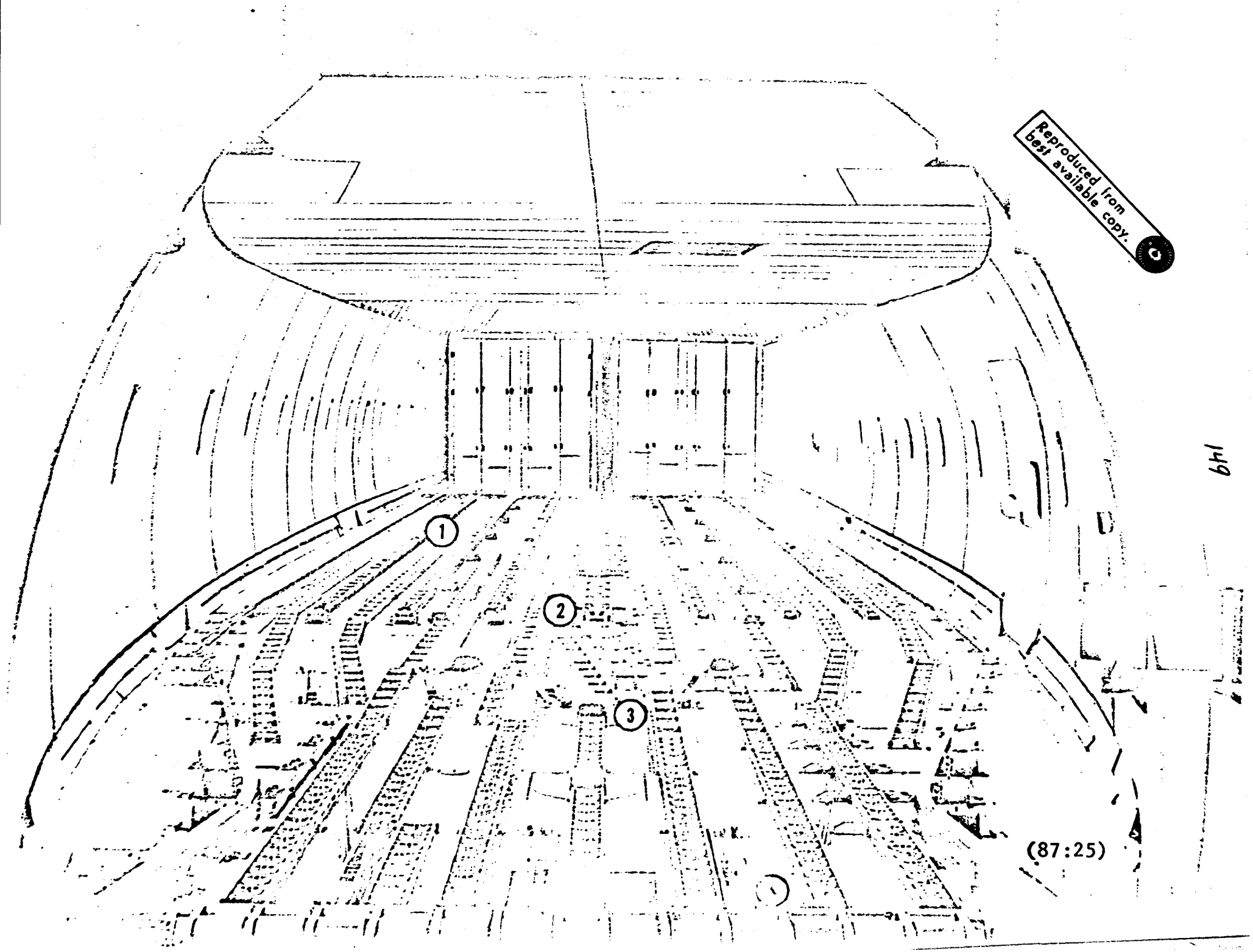

Reproduced from best available copy.

cargo door arrangement

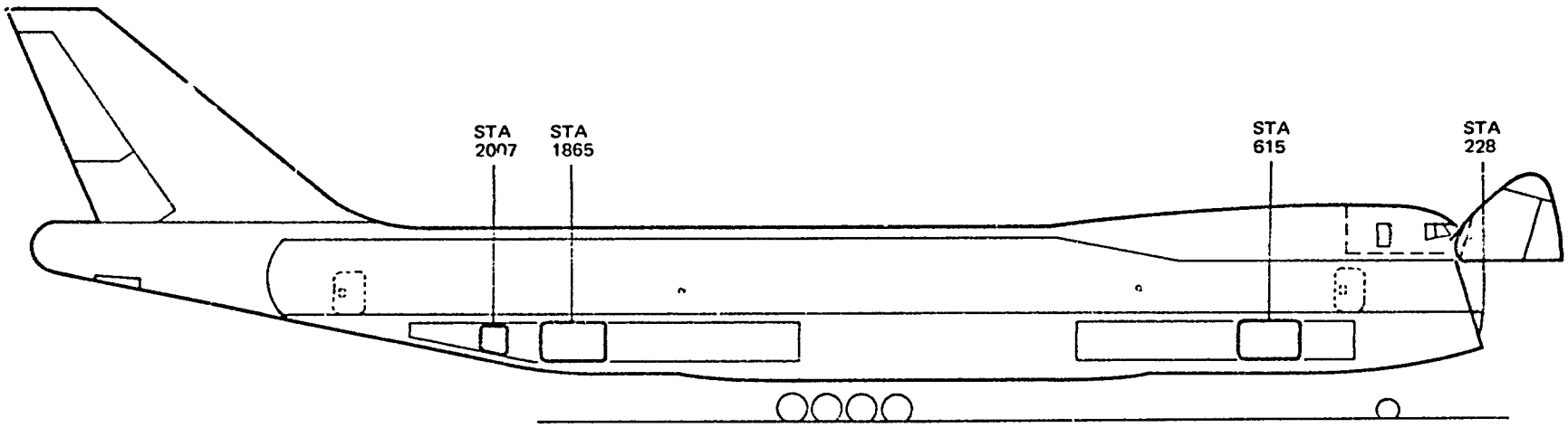

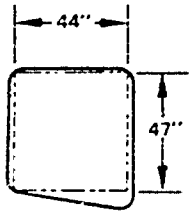

Bulk Cargo Compartment Door

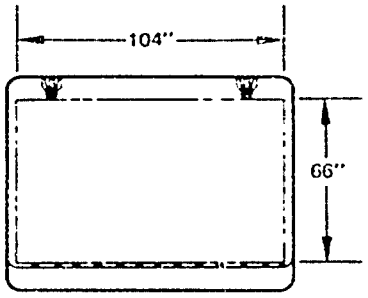

Lower Cargo Compartment Doors

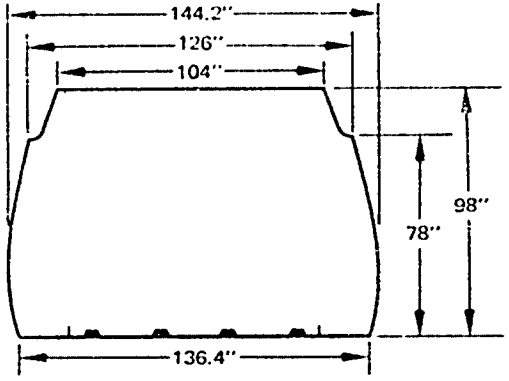

Nose Cargo Door

(87:8)

747 FREIGHTER PAYLOAD-RANGE

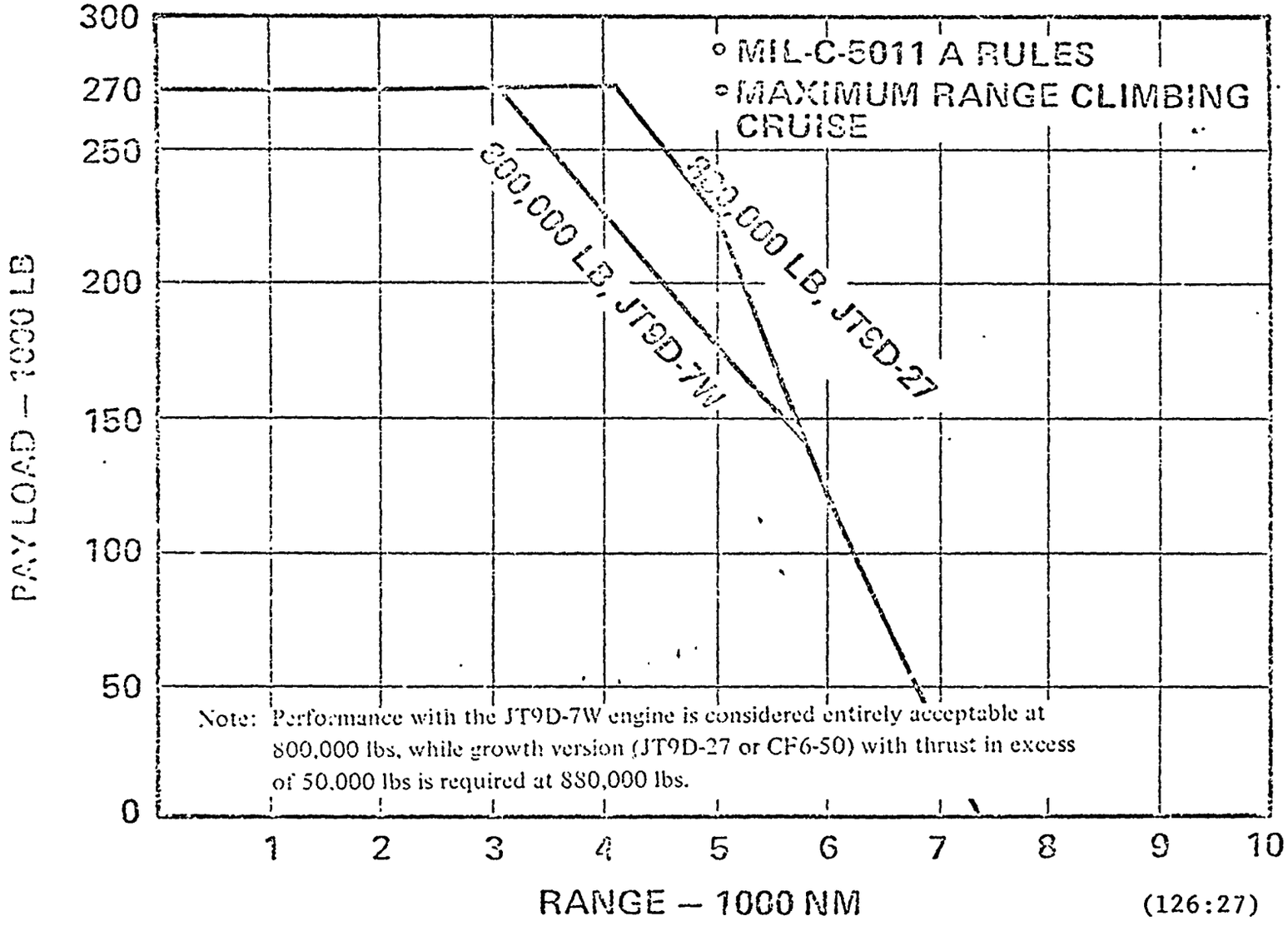

(126:27)

747 PERFORMANCE

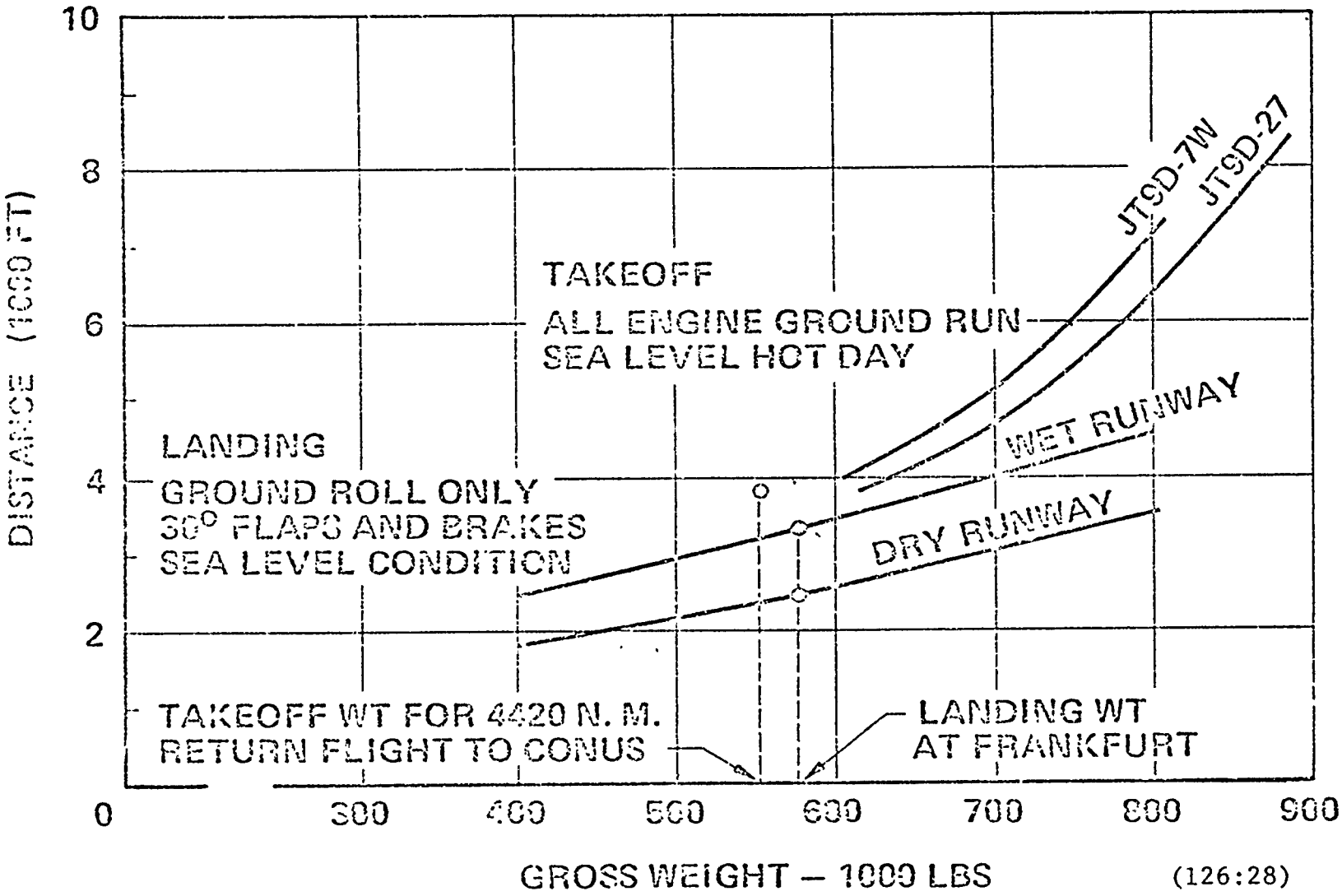

(126:28)

APPENDIX E

Since the report is concerned primarily with the C-5A and the 747C/F, this section portrays only the cargo arrangement within the DC-10.

DC-10-30 C CARGO ARRANGEMENT

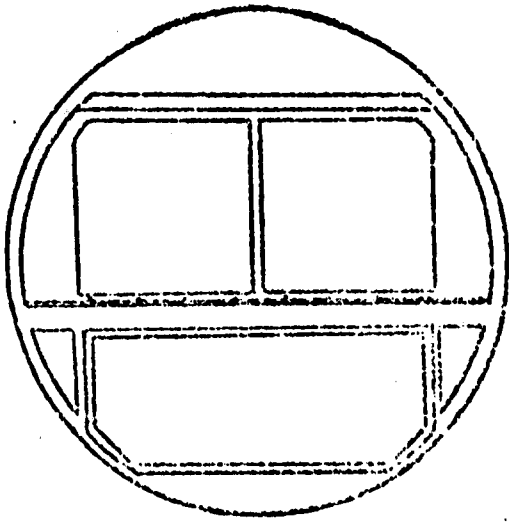

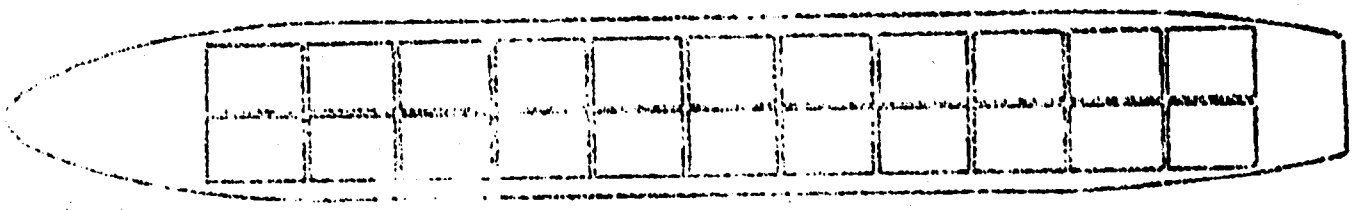

22 PALLETS 88" × 125" × 96"

494.3 CU. FT. EACH [illegible] CU. FT. TOTAL

13 CONTAINERS 320 CU. FT. EACH 4163 CU. FT.

BULK CARGO 480 CU. FT. (89:4.2.4)

4643 CU. FT. TOTAL

APPENDIX F

The material presented in this section portrays the relative allowable cabin loads (ACL) for the primary aircraft in MAC and CRAF. The mathematical computations were derived from AFM 76-2 (3:20) and Boeing Report 148-40-52 (128:13).

ACL data was computed for the following aircraft: C-5A, C-141, 747C, 707, DC-8-50F and DC-8-61F.

Relative Allowable Cabin Load (ACL) Computations

C-5A

36 Pallets @ 505.55 Ft^3 = 18,200 Ft^3

X 10 lb/Ft^3 Cargo Density = 182,000 lbs = 91 tons ACL

C-141

8 Pallets @ 505.55 Ft^3 = 4,045 Ft^3

2 Pallets @ 384.22 Ft^3 = 768 Ft^3

4,813 Ft^3

X 10 lb/Ft^3 Cargo Density = 48,130 lbs = 24.07 tons ACL

Boeing 747C

36 Main Deck Pallets @ 490 Ft^3 = 17,640 Ft^3

9 Lower Lobe Pallets @ 320 = 2,880 Ft^3

(Bulk) = 800 Ft^3

21,320 Ft^3

X 10 lb/Ft Cargo Density =213,200 lbs = 106.6 tons ACL

Boeing 707

13 Pallets @ 366.39 Ft = 4,763 Ft

Lower Holds (Bulk) = 1,712 Ft

6,475 Ft

X 10 lb/Ft Cargo Density = 64,750 lbs = 32.38 tons ACL

DC-8-50F/62F

13 Pallets @ 378.54 Ft^3	=	4,921 Ft^3
Lower Holds (Bulk)	=	1,390 Ft^3
		6,311 Ft^3
X 10 lb/Ft^3 Cargo Density	=	63,110 lbs = 31.56 tons ACL

DC-8-61F/63F

18 Pallets @ 380.53 Ft^3	=	6,850 Ft^3
Lower Holds (Bulk)	=	2,625 Ft^3
		9,475 Ft^3
X 10 lb/Ft^3 Cargo Density	=	94,750 lbs = 47.38 tons ACL

APPENDIX G

The material in this section concerns C-5A reliability. Graphs portray Mission, Abort and Major Subsystem reliability. The following is a brief description on each illustration.

1. Mission reliability is based on 10-hour flights. (Illustration 1,2)

2. Abort reliability is based on 10-hour flights with quarterly increments. (Illustration 3)

3. Major subsystem failures. (Illustration 4,5,6)

C-5A MISSION RELIABILITY

10 HOUR FLIGHTS

DATA SOURCE: DATA TABULATED FROM FLIGHT SQUAWK REPORTS

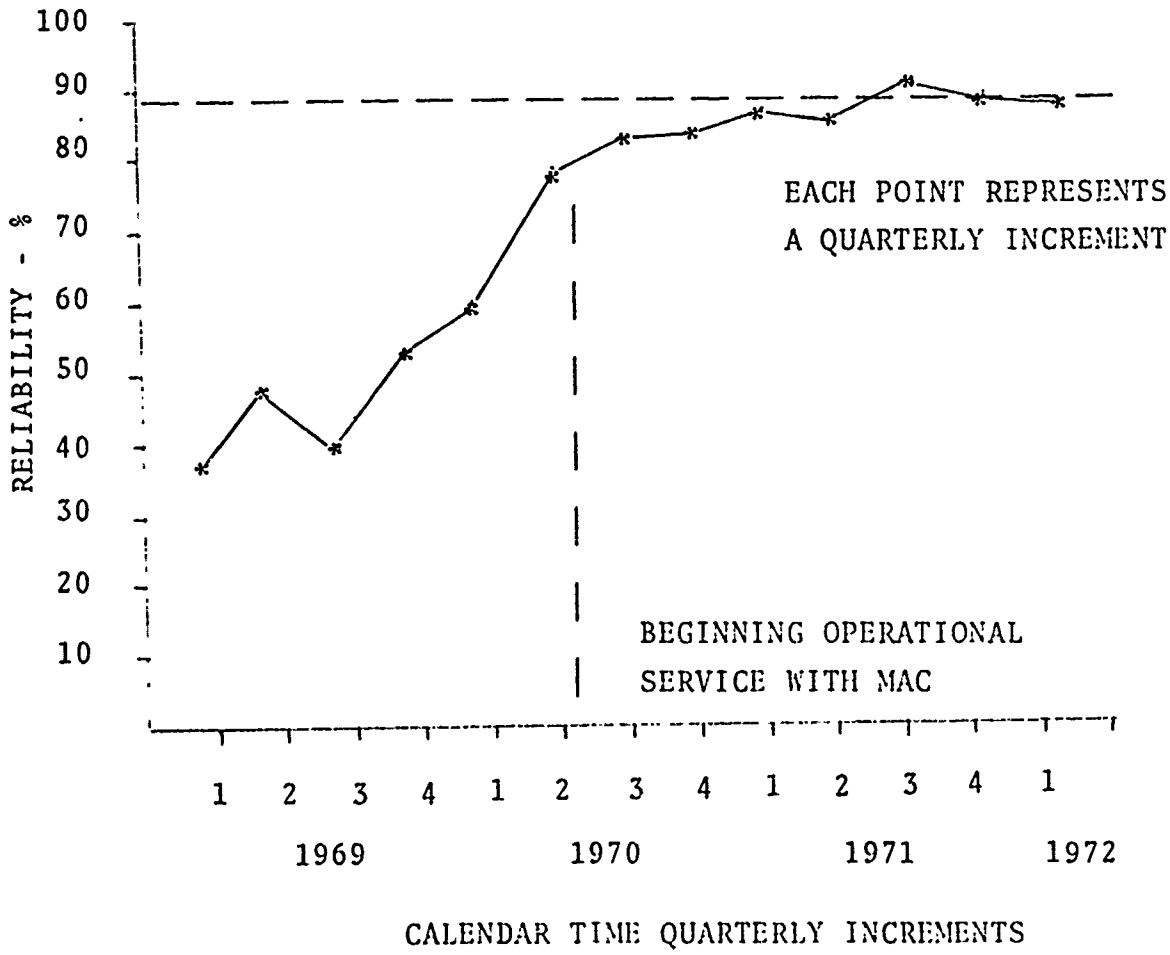

(56)

C-5 MISSION RELIABILITY, 10 HOUR FLIGHTS
MONTHLY INCREMENTS

DATA SOURCE: 781 FLIGHT SQUAWKS

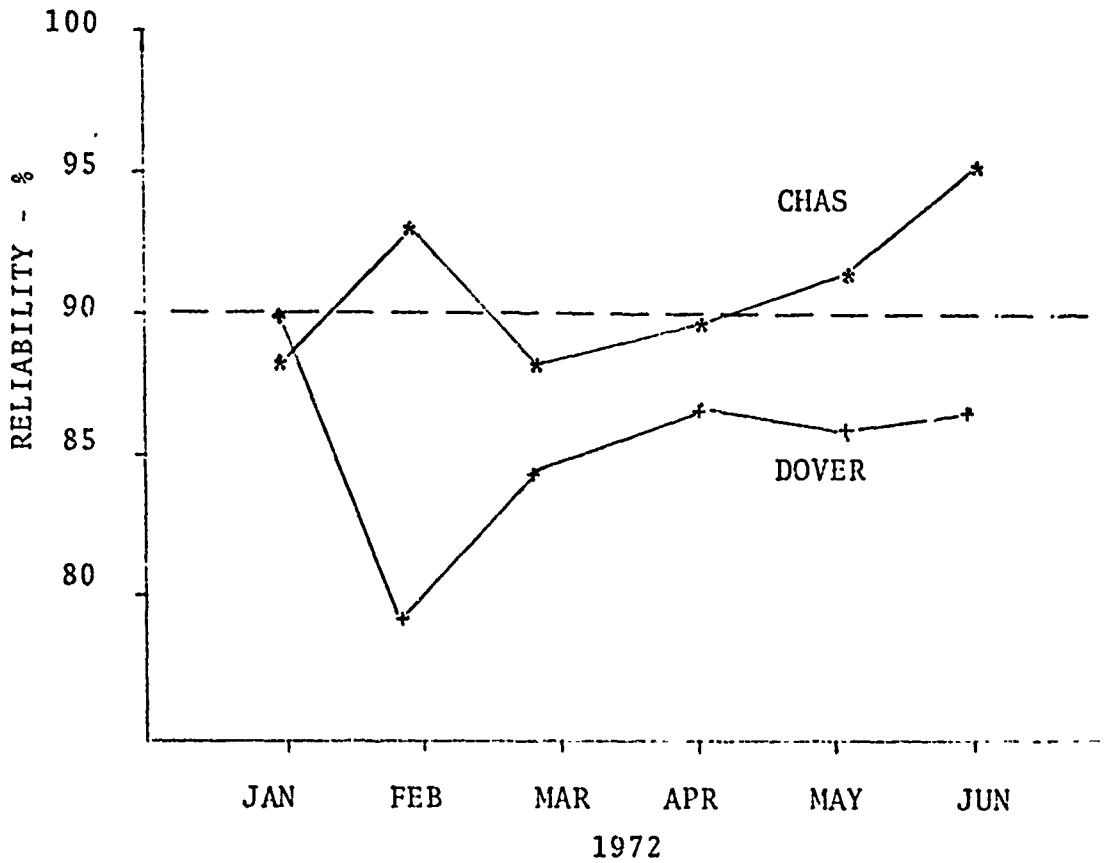

(56)

C-5 ABORT RELIABILITY

10 HOUR FLIGHTS

DATA SOURCE: DATA TABULATED FROM FLIGHT SQUAWK REPORTS

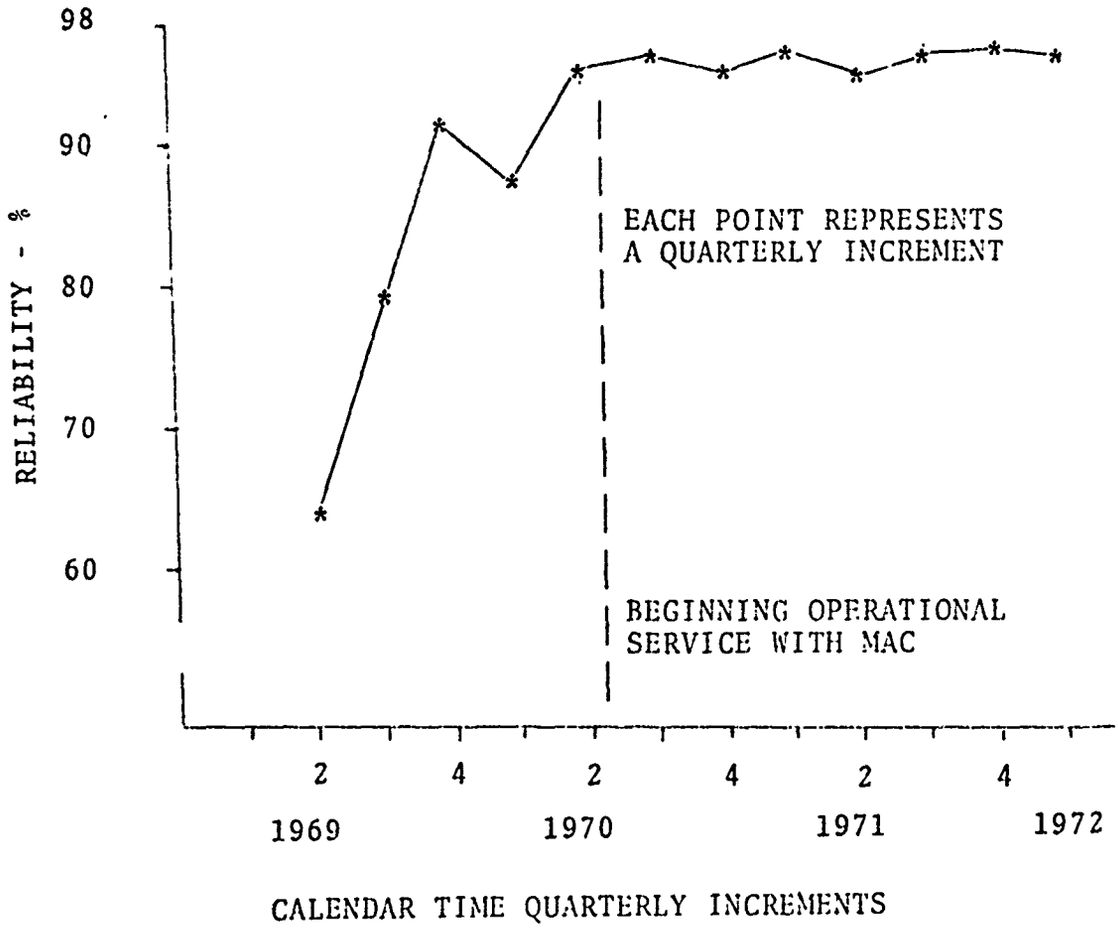

(56)

C-5 MAJOR SUBSYSTEM FAILURE DISTRIBUTION

SYSTEM/FUNCTION	FAILURE RATE PER 1000 HOURS (2 4 6 8)
L. G. EXT/RET	**********
HYDRAULIC SYSTEM LOSS	*********
ENGINE SHUTDOWN	********
BOTH HF'S INOP	*******
FLAP/SLAT EXT/RET	******
CREW SEATS	*****
L. G. C/W & STEER	****
KNEELING	****
ENGINE START	***
AFCS	**
FUEL LEAK	**
OXYGEN LEAK	*
BOTH AHRU'S	*
BOTH Ku & X MMR	*

DATA SOURCE: 781 FLIGHT SQUAWK REPORTS JULY 1971 THRU JAN 1972
9135 FLYING HOURS
CHAS - DOVER - TRAVIS OPREATIONAL SERVICE

(56)

C-5 MAJOR SUBSYSTEM FAILURE DISTRIBUTION

BY CEI AND MODEL FORMAT

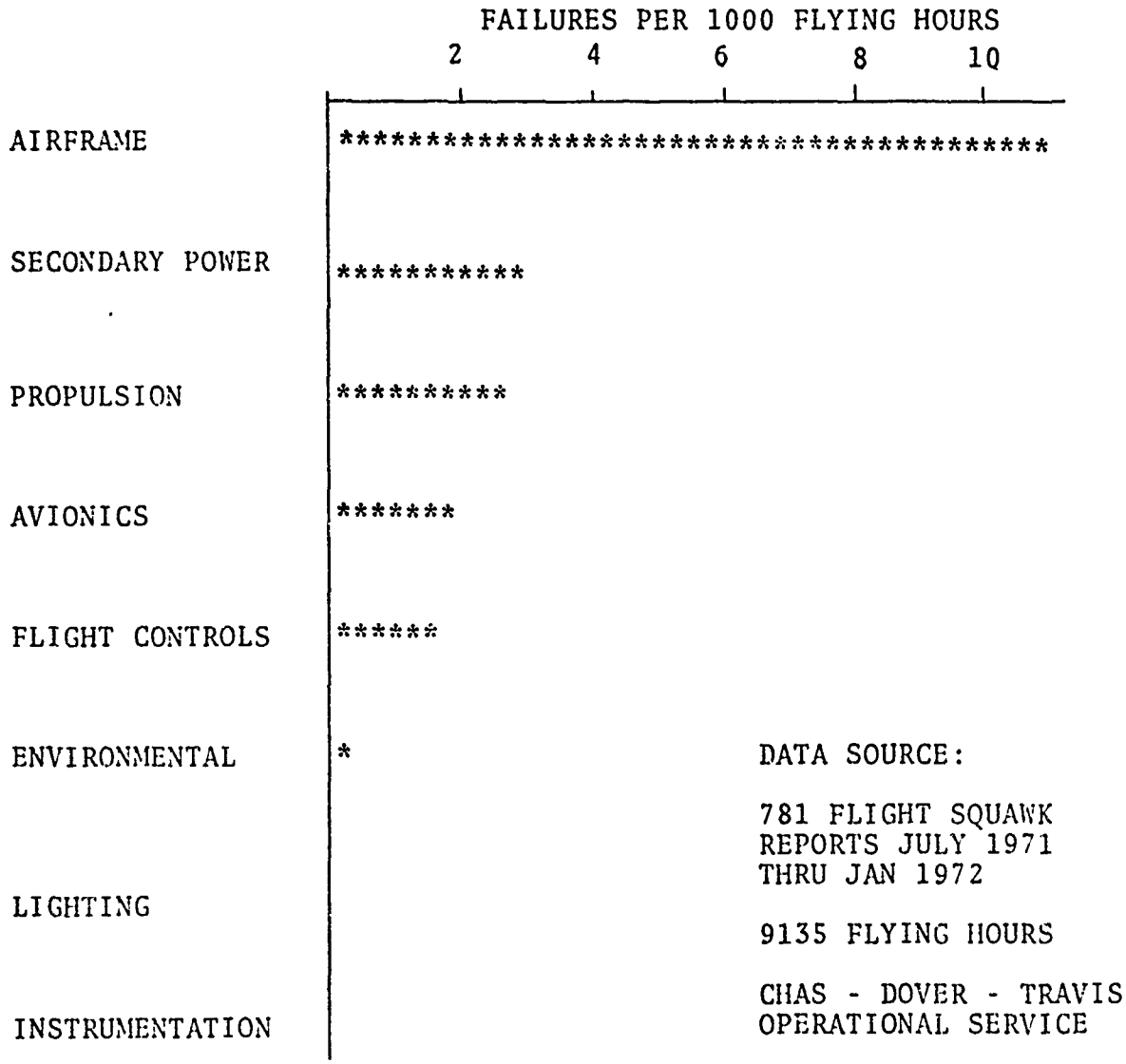

(56)

C-5 MAJOR SUBSYSTEM FAILURE DISTRIBUTION

DIRECT TABULATION FROM 781 FLIGHT SQUAWK REPORTS
VS
C-5A MATH MODEL ASSESSMENT OF AFM 66-1 DATA

```
                          FAILURES PER 1000 FLYING HOURS
                            2       4       6       8       10
                  |_____________________________________________
                  ****************************************
AIRFRAME          ++++++++++++++++++++++++++++++++++++++++
                  *********
SECONDARY POWER   ++++++++++
                  ********
PROPULSION        +++++++++
                  ******
AVIONICS          +++++
                  *****
FLIGHT CONTROL    +++++++
                  *
ENVIRONMENTAL     +++++++
LIGHTING
INSTRUMENTATION   +
```

(56)

* - FROM 781 FLIGHT SQUAWK REPORTS JUNE 71 THRU JAN 72
9135 FLYING HOURS - CHAS - DOVER - TRAVIS

\+ - MATH MODEL ASSESSMENT OF 31,175 FLYING HOURS
AFM 66-1 DATA FROM CHAS - DOVER - TRAVIS

NOTE: SYSTEM FAILURES RATES DIFFERENCES ARE LESS THAN 1 FAILURE PER 1000 FLIGHT HOURS. PRODUCT MOMENT CORRELATION BETWEEN DIRECT TABULATION AND MODEL OUTPUT EXCEEDS 99% AT MAJOR SUBSYSTEM (CEI) LEVEL.

APPENDIX H

The material presented in this section illustrates the cost per hour and cost per ton nautical mile for the C-141 and C-5A. The costs are directly related to aircraft life expectancy.

The figures are computed from FY 73 budget estimates. Cost per hour = direct operating cost + (cost per airframe ÷ expected life of aircraft). Cost per ton nm = Cost per hour - ton mile factor (blockspeed x payload).

The Direct Operating Cost of the C-5A and C-141 without considering depreciation is $1216 per hour and $507 per hour respectively. (124:20)

The computer program used by the authors supplements the cost computations.

```
210 LIFT=0
220 PRINT 121
230 PRINT 122
240 PRINT 123
250 DO 10 I=1,30
260 LIFT=LIFT+1000
270 CSA=1010.+3705.2000./LIFT
280 CTON5=CSA/375.40.
290 C141=527.+6000000./LIFT
300 CTONA=C141/12000.
110 PRINT 124,LIFT,C141,CTONA,CSA,CTON5
120 10 CONTINUE
130 121 FORMAT(///5X,4HLIFT,9X,4HC141,9X,3HCSA)
140 122 FORMAT(//,10X,4HCOST,14X,4HCOST,9X,4HCOST,10X,4HCOST)
150 123 FORMAT(10X,6HPER LB,10X,10HPER TON/YR,5X,6HPER LB,5X
1,10HPER TON/YR,///)
160 124 FORMAT(4X,I5,6X,F6.0,14X,F5.3,4X,F6.0,10X,F5.3)
170 END
```

LIFT	C141		CSA	
	COST PER LB	COST PER TON/YR	COST PER LB	COST PER TON/YR
1000	6707.33	0.650	30166.70	1.080
2000	3607.33	0.351	22101.33	0.661
3000	2573.67	0.250	18866.67	0.454
4000	2057.00	0.200	16933.50	0.353
5000	1747.00	0.170	15676.00	0.296
6000	1540.33	0.150	14741.00	0.247
7000	1392.71	0.135	14037.43	0.217
8000	1280.00	0.125	13459.75	0.195
9000	1195.00	0.116	13030.67	0.178
10000	1127.00	0.110	12711.00	0.164
11000	1070.64	0.104	12466.00	0.153
12000	1023.67	0.100	12272.50	0.143
13000	983.00	0.096	12135.03	0.135
14000	948.00	0.092	12006.71	0.128
15000	917.33	0.089	11946.00	0.123
16000	890.50	0.087	11907.87	0.117
17000	871.71	0.085	11882.35	0.113
18000	851.44	0.083	11904.33	0.109
19000	833.39	0.081	11913.37	0.105
20000	817.00	0.079	11913.50	0.102
21000	800.64	0.078	11903.14	0.099
22000	788.00	0.077	11881.00	0.096
23000	776.57	0.076	11866.00	0.094
24000	765.33	0.074	11847.05	0.092
25000	755.00	0.073	11834.00	0.089
26000	745.46	0.072	11825.00	0.088
27000	736.03	0.070	11801.50	0.086
28000	728.43	0.071	11771.30	0.084
29000	720.90	0.070	11754.00	0.083
30000	713.67	0.069	11731.00	0.081

APPENDIX I

This appendix contains the direct operating cost computations for the civilian and military transport aircraft. The Air Transport Association of America's standard method of estimating comparative direct operating costs of turbine power transport airplanes was used. These costs are for illustration purposes only and no conclusions should be interpreted by their use.

AIRCRAFT DATA

TYPE OF AIRCRAFT: 707-320C Cargo

ENGINE: JT3D = 33

TOTAL AIRCRAFT PRICE: (Ct)	$9,570,000
COST OF ONE ENGINE: (Ce)	$ 381,900
COST OF AIRFRAME: (Ct-(Ce)(Ne))	
LESS ENGINES	$8,143,000
CERTIFIED GROSS WEIGHT: (GW)	336,000 lbs
OPERATING EMPTY WEIGHT: (OEW)	139,000 lbs
EMPTY WEIGHT: (WtE)	133,600 lbs
WEIGHT OF AIRFRAME: (Wa=Wte-(We)Ne))	116,800 lbs
NUMBER OF ENGINES: (Ne)	4
WEIGHT OF ENGINE: (We)	4,300
TAKEOFF THRUST ONE ENGINE: (T)	18,000
ANNUAL UTILIZATION: (U) (FUNCTION OF AVERAGE RANGE)	VARIABLE

INSURANCE: 2% OF TOTAL AIRCRAFT PRICE/YEAR

DEPRECIATION

AIRFRAME	12 YEARS TO 0%
ENGINES	12 YEARS TO 0%
SPARES	
AIRFRAME	10% 12 YEARS TO 0%
ENGINES	40% 12 YEARS TO 0%

NON REVENUE FLYING FACTOR: 2% APPLIED TO CREW, FUEL, OIL, AND MAINTENANCE

DIRECT OPERATING COST FORMULAS

AIRCRAFT TYPE: 707-320C Cargo
ENGINE: JT3D-3C

		1*	2*	3*
A	CREW PAY(INTERNATIONAL 3 MEN) =(.05(TO GW MAX)/1000) 155		172	
B	INSURANCE=(.02)CT/U		54	
C	OIL=$.13/ENG/HOUR			
D	AIRFRAME MAINTENANCE:			
	LABOR-$PER CYCLE =.2Wa/1000+24-(2520/((Wa/1000)+120))			37
	LABOR-$PER HOUR=.59($/CYCLE)	22		
	MATERIAL-$PER CYCLE=6.24Ca/10,000,000			51
	MATERIAL-$PER HOUR=3.08Ca/10,000,000	25		
	BURDEN-$PER CYCLE=1.8(LABOR $/CYCLE)			66
	BURDEN-$PER HOUR=1.8(LABOR $/HOUR)	39		
E	ENGINE MAINTENANCE:			
	LABOR-$PER CYCLE=(1.2+.12T/1000)Ne			13
	LABOR-$PER HOUR=(2.4+.108T/1000)Ne	17		
	MATERIAL-$PER CYCLE=20NeCe/10,000,000			31
	MATERIAL-$PER HOUR=25NeCe/10,000,000	38		
	BURDEN-$PER CYCLE=1.8(LABOR $/CYCLE)			24
	BURDEN-$PER HOUR=1.8(LABOR $/HOUR)	31		
F	DEPRECIATION:			
	AIRCRAFT=Ca/12U		188	
	AIRCRAFT SPARES=.1Ca/12U		19	
	ENGINE=CeNe/12U		35	
	ENGINE SPARES=.4CeNe/12U		14	
G	TOTALS			
	INTERNATIONAL(WITH CREW)	173	483	222
	INTERNATIONAL(WITHOUT CREW)	173	311	222

NOTE: FOR PURPOSES OF ILLUSTRATION, COSTS SHOWN ON THIS PAGE ARE BASED ON A UTILIZATION OF 3,600 HOURS WHICH, FOR THE VARIABLE UTILIZATION SCHEDULE, CORRESPONDS TO AN AVERAGE BLOCK TIME OF 4.0 HOURS.

*1 - DOLLARS PER REVENUE FLIGHT HOUR
2 - DOLLARS PER REVENUE BLOCK HOUR
3 - DOLLARS PER CYCLE (FLIGHT)

AIRCRAFT DATA

TYPE OF AIRCRAFT: DC-8-63C Freighter

ENGINE: JT3D-7

TOTAL AIRCRAFT PRICE: (Ct)	$12,100,000
COST OF ONE ENGINE: (Ce)	$ 397,000
COST OF AIRFRAME: (Ct-(Ce)(Ne))	
LESS ENGINES	$10,512,000
CERTIFIED GROSS WEIGHT: (GW)	358,000 lbs
OPERATING EMPTY WEIGHT: (OEW)	158,000 lbs
EMPTY WEIGHT: (WtE)	148,900 lbs
WEIGHT OF AIRFRAME: (Wa=Wte-(We)(Ne))	131,700 lbs
NUMBER OF ENGINES: (Ne)	4
WEIGHT OF ENGINE: (We)	4,300 lbs
TAKEOFF THRUST ONE ENGINE: (T)	19,000 lbs
ANNUAL UTILIZATION: (U) (FUNCTION OF AVERAGE RANGE)	VARIABLE

INSURANCE: 2% OF TOTAL AIRCRAFT PRICE PER YEAR

DEPRECIATION:

AIRFRAME		12 YEARS TO 0%
ENGINES		12 YEARS TO 0%
SPARES		
AIRFRAME	10%	12 YEARS TO 0%
ENGINES	40%	12 YEARS TO 0%

NON REVENUE FLYING FACTOR: 2% APPLIED TO CREW, FUEL, OIL, AND MAINTENANCE

DIRECT OPERATING COST FORMULAS

AIRCRAFT TYPE: DC-8-63C Freighter
ENGINE: JT3D-7

		1*	2*	3*
A	CREW PAY(INTERNATIONAL 3 MEN) =(.05(TO GW MAX)/1000) + 155		173	
B	INSURANCE=(.02)CT/U		67	
C	OIL=$.13/ENG/HOUR		.52	
D	AIRFRAME MAINTENANCE:			
	LABOR-$PER CYCLE =.2Wa/1000÷24-(2520/((Wa/1000)+120))			40
	LABOR-$PER HOUR=.59($/CYCLE)	24		
	MATERIAL-$PER CYCLE=6.24Ca/10,000,000			66
	MATERIAL-$PER HOUR=3.08Ca/10,000,000	32		
	BURDEN-$PER CYCLE=1.8(LABOR $/CYCLE)			73
	BURDEN-$PER HOUR=1.8(LABOR $/HOUR)	43		
E	ENGINE MAINTENANCE:			
	LABOR-$PER CYCLE=(1.2+.12T/1000)Ne			14
	LABOR-$PER HOUR=(2.4+.108T/1000)Ne	18		
	MATERIAL-$PER CYCLE=20NeCe/10,000,000			32
	MATERIAL-$PER HOUR=25NeCe/10,000,000	40		
	BURDEN-$PER CYCLE=1.8(LABOR $/CYCLE)			25
	BURDEN-$PER HOUR=1.8(LABOR $/HOUR)	32		
F	DEPRECIATION:			
	AIRCRAFT=Ca/12U		243	
	AIRCRAFT SPARES=.1Ca/12U		24	
	ENGINE=CeNe/12U		37	
	ENGINE SPARES=.4CeNe/12U		15	
G	TOTALS			
	INTERNATIONAL(WITH CREW)	189	560	249
	INTERNATIONAL(WITHOUT CREW)	189	387	249

NOTE: FOR PURPOSES OF ILLUSTRATION, COSTS SHOWN ON THIS PAGE ARE BASED ON A UTILIZATION OF 3,600 HOURS WHICH FOR THE VARIABLE UTILIZATION SCHEDULE, CORRESPONDS TO AN AVERAGE BLOCK TIME OF 4.0 HOURS.

*1 - DOLLARS PER REVENUE FLIGHT HOUR
2 - DOLLARS PER REVENUE BLOCK HOUR
3 - DOLLARS PER CYCLE (FLIGHT)

AIRCRAFT DATA

TYPE OF AIRCRAFT: 747-200C Convertible

ENGINE: JT9D-7W

TOTAL AIRCRAFT PRICE: (Ct)	$28,000,000
COST OF ONE ENGINE: (Ce)	$ 860,000
COST OF AIRFRAME: (Ct-(Ce)(Ne))	
LESS ENGINES	$24,754,000
CERTIFIED GROSS WEIGHT: (GW)	778,000 lbs
OPERATING EMPTY WEIGHT: (OEW)	351,162 lbs
EMPTY WEIGHT: (WtE)	326,648 lbs
WEIGHT OF AIRFRAME: (Wa=WtE-(We)(Ne))	292,648 lbs
NUMBER OF ENGINES: (Ne)	4
WEIGHT OF ENGINE: (We)	8,500 lbs
TAKEOFF THRUST ONE ENGINE: (T)	47,000 lbs
ANNUAL UTILIZATION (U) (FUNCTION OF AVERAGE RANGE)	VARIABLE

INSURANCE: 2% OF TOTAL AIRCRAFT PRICE PER YEAR

DEPRECIATION:

AIRFRAME		12 YEARS TO 0%
ENGINES		12 YEARS TO 0%
SPARES		
AIRFRAME	10%	12 YEARS TO 0%
ENGINES	40%	12 YEARS TO 0%

NON REVENUE FLYING FACTOR: 2% APPLIED TO CREW, FUEL, OIL, AND MAINTENANCE

DIRECT OPERATING COST FORMULAS

AIRCRAFT TYPE: 747-200C Convertible
ENGINE: JT9D-7W

		1*	2*	3*
A	CREW PAY(INTERNATIONAL ? MEN) =(.05(TO GW MAX)/1000) + 155		194	
B	INSURANCE=(.02)CT/U		156	
C	OIL=$.13/ENG/HOUR		.52	
D	AIRFRAME MAINTENANCE:			
	LABOR-$PER CYCLE =.2Wa/1000+24-(2520/((Wa/1000)+120))			76
	LABOR-$PER HOUR=.59($/CYCLE)	45		
	MATERIAL-$PER CYCLE=6.24Ca/10,000,000			154
	MATERIAL-$PER HOUR=3.08Ca/10,000,000	76		
	BURDEN-$PER CYCLE=1.8(LABOR $/CYCLE)			38
	BURDEN-$PER HOUR=1.8(LABOR $/HOUR)	81		
E	ENGINE MAINTENANCE:			
	LABOR-$PER CYCLE=(1.2+.12T/1000)Ne			27
	LABOR-$PER HOUR=(2.4+.108T/1000)Ne	30		
	MATERIAL-$PER CYCLE=20NeCe/10,000,000			69
	MATERIAL-$PER HOUR=25NeCe/10,000,000	86		
	BURDEN-$PER CYCLE=1.8(LABOR $/CYCLE)			49
	BURDEN-$PER HOUR=1.8(LABOR $/HOUR)	54		
F	DEPRECIATION:			
	AIRCRAFT=Ca/12U		573	
	AIRCRAFT SPARES=.1Ca/12U		57	
	ENGINE=CeNe/12U		80	
	ENGINE SPARES=.4CeNe/12U		32	
G	TOTALS			
	INTERNATIONAL(WITH CREW)	372	1092	514
	INTERNATIONAL(WITHOUT CREW)	372	898	514

NOTE: FOR PURPOSES OF ILLUSTRATION, COSTS SHOWN ON THIS PAGE ARE BASED ON A UTILIZATION OF 3,600 HOURS WHICH, FOR THE VARIABLE UTILIZATION SCHEDULE, CORRESPONDS TO AN AVERAGE BLOCK TIME OF 4.0 HOURS.

*1 - DOLLARS PER REVENUE FLIGHT HOUR
2 - DOLLARS PER REVENUE BLOCK HOUR
3 - DOLLARS PER CYCLE (FLIGHT)

AIRCRAFT DATA

TYPE OF AIRCRAFT: 747F Freighter

ENGINE: JT9D-7W

TOTAL AIRCRAFT PRICE: (Ct)	$25,100,000
COST OF ONE ENGINE: (Ce)	$ 954,000
COST OF AIRFRAME: (Ct-(Ce)(Ne))	
LESS ENGINES	$21,284,000
CERTIFIED GROSS WEIGHT: (GW)	778,000 lbs
OPERATING EMPTY WEIGHT: (OEW)	335,287 lbs
EMPTY WEIGHT: (WtE)	314,229 lbs
WEIGHT OF AIRFRAME: (Wa=WtE-(We)(Ne))	280,229 lbs
NUMBER OF ENGINES: (Ne)	4
WEIGHT OF ENGINE: (We)	8,500 lbs
TAKEOFF THRUST ONE ENGINE: (T)	47,000
ANNUAL UTILIZATION: (U) (FUNCTION OF AVERAGE RANGE)	VARIABLE

INSURANCE: 2% OF TOTAL AIRCRAFT PRICE PER YEAR

DEPRECIATION:

AIRFRAME		12 YEARS TO 0%
ENGINES		12 YEARS TO 0%
SPARES		
AIRFRAME	10%	12 YEARS TO 0%
ENGINES	40%	12 YEARS TO 0%

NON REVENUE FLYING FACTOR: 2% APPLIED TO CREW, FUEL, OIL, AND MAINTENANCE

DIRECT OPERATING COST FORMULAS

AIRCRAFT TYPE: 747F Freighter
ENGINE: JT9D-7W

		1*	2*	3*
A	CREW PAY(INTERNATIONAL 3 MEN) =(.05(TO GW MAX)/1000) + 155		194	
B	INSURANCE=(.02)CT/U		140	
C	OIL=$.13/ENG/HOUR		.52	
D	AIRFRAME MAINTENANCE:			
	LABOR-$PER CYCLE =.2Wa/1000+24-(2520/((Wa/1000)+120))			74
	LABOR-$PER HOUR=.59($/CYCLE)	44		
	MATERIAL-$PER CYCLE=6.24Ca/10,000,000			133
	MATERIAL-$PER HOUR=3.08Ca/10,000,000	66		
	BURDEN-$PER CYCLE=1.8(LABOR $/CYCLE)			133
	BURDEN-$PER HOUR=1.8(LABOR $/HOUR)	78		
E	ENGINE MAINTENANCE:			
	LABOR-$PER CYCLE=(1.2+.12T/1000)Ne			27
	LABOR-$PER HOUR=(2.4+.108T/1000)Ne	30		
	MATERIAL-$PER CYCLE=20NeCe/10,000,000			76
	MATERIAL-$PER HOUR=25NeCe/10,000,000	95		
	BURDEN-$PER CYCLE=1.8(LABOR $/CYCLE)			49
	BURDEN-$PER HOUR=1.8(LABOR $/HOUR)	54		
F	DEPRECIATION:			
	AIRCRAFT=Ca/12U		493	
	AIRCRAFT SPARES=.1Ca/12U		49	
	ENGINE=CeNe/12U		88	
	ENGINE SPARES=.4CeNe/12U		35	
G	TOTALS			
	INTERNATIONAL(WITH CREW)	367	999	492
	INTERNATIONAL(WITHOUT CREW)	367	806	492

NOTE: FOR PURPOSES OF ILLUSTRATION, COSTS SHOWN ON THIS PAGE ARE BASED ON A UTILIZATION OF 3,600 HOURS WHICH, FOR THE VARIABLE UTILIZATION SCHEDULE, CORRESPONDS TO AN AVERAGE BLOCK TIME OF 4.0 HOURS.

*1 - DOLLARS PER REVENUE FLIGHT HO
2 - DOLLARS PER REVENUE BLOCK HOUR
3 - DOLLARS PER CYCLE (FLIGHT)

AIRCRAFT DATA

TYPE OF AIRCRAFT: DC10-30C Freighter

ENGINE: CF6-50C

TOTAL AIRCRAFT PRICE: (Ct)	$17,700,000
COST OF ONE ENGINE: (Ce)	$ 1,027,000
COST OF AIRFRAME: (Ct-(Ce)(Ne))	
LESS ENGINES	$13,392,000
CERTIFIED GROSS WEIGHT: (GW)	558,000 lbs
OPERATING EMPTY WEIGHT: (OEW)	241,800 lbs
EMPTY WEIGHT: (WtE)	226,890 lbs
WEIGHT OF AIRFRAME: (Wa=WtE-(We)(Ne))	202,290 lbs
NUMBER OF ENGINES: (Ne)	3
WEIGHT OF ENGINE: (We)	8,200 lbs
TAKEOFF THRUST ONE ENGINE: (T)	51,000 lbs
ANNUAL UTILIZATION: (U) (FUNCTION OF AVERAGE RANGE)	VARIABLE

INSURANCE: 2% OF TOTAL AIRCRAFT PRICE PER YEAR

DEPRECIATION:

AIRFRAME		12 YEARS TO 0%
ENGINES		12 YEARS TO 0%
SPARES		
AIRFRAME	10%	12 YEARS TO 0%
ENGINES	40%	12 YEARS TO 0%

NON REVENUE FLYING FACTOR: 2% APPLIED TO CREW, FUEL, OIL, AND MAINTENANCE

DIRECT OPERATING COST FORMULAS

AIRCRAFT TYPE: DC10-30C Freighter
ENGINE: CF6-50C

		1*	2*	3*
A	CREW PAY(INTERNATIONAL 3 MEN) =(.05(TO GW MAX)/1000) + 155		183	
B	INSURANCE=(.02)CT/U		98	
C	OIL=$.13/ENG/HOUR		.39	
D	AIRFRAME MAINTENANCE:			
	LABOR-$PER CYCLE =.2Wa/1000+24-(2520/((Wa/1000)+120))			57
	LABOR-$PER HOUR=.59($/CYCLE)	33		
	MATERIAL-$PER CYCLE=6.24Ca/10,000,000			84
	MATERIAL-$PER HOUR=3.08Ca/10,000,000	41		
	BURDEN-$PER CYCLE=1.8(LABOR $/CYCLE)			102
	BURDEN-$PER HOUR=1.8(LABOR $/HOUR)	60		
E	ENGINE MAINTENANCE:			
	LABOR-$PER CYCLE=(1.2+.12T/1000)Ne			22
	LABOR-$PER HOUR=(2.4+.108T/1000)Ne	24		
	MATERIAL-$PER CYCLE=20NeCe/10,000,000			62
	MATERIAL-$PER HOUR=25NeCe/10,000,000	77		
	BURDEN-$PER CYCLE=1.8(LABOR $/CYCLE)			40
	BURDEN-$PER HOUR=1.3(LABOR $/HOUR)	43		
F	DEPRECIATION:			
	AIRCRAFT=Ca/12U		310	
	AIRCRAFT SPARES=.1Ca/12U		31	
	ENGINE=CeNe/12U		71	
	ENGINE SPARES=.4CeNe/12U		29	
G	TOTALS			
	INTERNATIONAL(WITH CREW)	278	722	365
	INTERNATIONAL(WITHOUT CREW)	278	540	365

NOTE: FOR PURPOSES OF ILLUSTRATION, COSTS SHOWN ON THIS PAGE ARE BASED ON A UTILIZATION OF 3,600 HOURS WHICH, FOR THE VARIABLE UTILIZATION SCHEDULE, CORRESPONDS TO AN AVERAGE BLOCK TIME OF 4.0 HOURS.

*1 - DOLLARS PER REVENUE FLIGHT HOUR
2 - DOLLARS PER REVENUE BLOCK HOUR
3 - DOLLARS PER CYCLE (FLIGHT)

AIRCRAFT DATA

TYPE OF AIRCRAFT: C-141A

ENGINE: JT3D-8A

TOTAL AIRCRAFT PRICE: (Ct)	$6,200,000
COST OF ONE ENGINE: (Ce)	$ 270,000
COST OF AIRFRAME: (Ct-(Ce)(Ne))	
LESS ENGINES	$5,120,000
CERTIFIED GROSS WEIGHT: (GW)	325,000 lbs
OPERATING EMPTY WEIGHT: (OEW)	133,773 lbs
EMPTY WEIGHT: (WtE)	145,000 lbs
WEIGHT OF AIRFRAME: (Wa=WtE-(We)(Ne))	126,080 lbs
NUMBER OF ENGINES: (Ne)	4
WEIGHT OF ENGINE: (We)	4,200 lbs
TAKEOFF THRUST ONE ENGINE: (T)	20,180 lbs
ANNUAL UTILIZATION: (U) (FUNCTION OF AVERAGE RANGE)	VARIABLE

INSURANCE: 2% OF TOTAL AIRCRAFT PRICE PER YEAR

DEPRECIATION:

AIRFRAME		12 YEARS TO 0%
ENGINES		12 YEARS TO 0%
SPARES		
AIRFRAME	10%	12 YEARS TO 0%
ENGINES	40%	12 YEARS TO 0%

NON REVENUE FLYING FACTOR: 2% APPLIED TO CREW, FUEL, OIL, AND MAINTENANCE

DIRECT OPERATING COST FORMULAS

AIRCRAFT TYPE: C-141A
ENGINE: JT3D-8A

		1*	2*	3*
A	CREW PAY(INTERNATIONAL 6 MEN) =(.05(TO GW MAX)/1000) + 210		276	
B	INSURANCE=(.02)CT/U		34	
C	OIL=$.13/ENG/HOUR		.52	
D	AIRFRAME MAINTENANCE:			
	LABOR-$PER CYCLE =.2Wa/1000+24-(2520/((Wa/1000)+120))			39
	LABOR-$PER HOUR=.59($/CYCLE)	23		
	MATERIAL-$PER CYCLE=6.24Ca/10,000,000			32
	MATERIAL-$PER HOUR=3.08Ca/10,000,000	16		
	BURDEN-$PER CYCLE=1.8(LABOR $/CYCLE)			70
	BURDEN-$PER HOUR=1.8(LABOR $/HOUR)	41		
E	ENGINE MAINTENANCE:			
	LABOR-$PER CYCLE=(1.2+.12T/1000)Ne			14
	LABOR-$PER HOUR=(2.4+.108T/1000)Ne	18		
	MATERIAL-$PER CYCLE=20NeCe/10,000,000			22
	MATERIAL-$PER HOUR=25NeCe/10,000,000	27		
	BURDEN-$PER CYCLE=1.8(LABOR $/CYCLE)			26
	BURDEN-$PER HOUR=1.8(LABOR $/HOUR)	33		
F	DEPRECIATION:			
	AIRCRAFT=Ca/12U		119	
	AIRCRAFT SPARES=.1Ca/12U		12	
	ENGINE=CeNe/12U		25	
	ENGINE SPARES=.4CeNe/12U		10	
G	TOTALS			
	INTERNATIONAL(WITH CREW)	158	477	203
	INTERNATIONAL(WITHOUT CREW)	158	200	203

NOTE: FOR PURPOSES OF ILLUSTRATION, COSTS SHOWN ON THIS PAGE ARE BASED ON A UTILIZATION OF 3,600 HOURS WHICH, FOR THE VARIABLE UTILIZATION SCHEDULE, CORRESPONDS TO AN AVERAGE BLOCK TIME OF 4.0 HOURS.

*1 - DOLLARS PER REVENUE FLIGHT HOUR
2 - DOLLARS PER REVENUE BLOCK HOUR
3 - DOLLARS PER CYCLE (FLIGHT)

AIRCRAFT DATA

TYPE OF AIRCRAFT: C-5A

ENGINE: JT9D-7

TOTAL AIRCRAFT PRICE: (Ct)	$37,950,000
COST OF ONE ENGINE: (Ce)	$ 1,012,000
COST OF AIRFRAME: (Ct-(Ce)(Ne))	
LESS ENGINES	$33,902,000
CERTIFIED GROSS WEIGHT: (GW)	732,500 lbs
OPERATING EMPTY WEIGHT: (OEW)	325,244 lbs
EMPTY WEIGHT: (WtE)	319,809 lbs
WEIGHT OF AIRFRAME: (Wa=WtE-(We)(Ne))	287,409 lbs
NUMBER OF ENGINES: (Ne)	4
WEIGHT OF ENGINE: (We)	8,400 lbs
TAKEOFF THRUST ONE ENGINE: (T)	41,100
ANNUAL UTILIZATION: (U) (FUNCTION OF AVERAGE RANGE)	VARIABLE

INSURANCE: 2% OF TOTAL AIRCRAFT PRICE PER YEAR

DEPRECIATION:

AIRFRAMES		12 YEARS TO 0%
ENGINES		12 YEARS TO 0%
SPARES		
AIRFRAME	10%	12 YEARS TO 0%
ENGINES	40%	12 YEARS TO 0%

NON REVENUE FLYING FACTOR: 2% APPLIED TO CREW, FUEL, OIL, AND MAINTENANCE

DIRECT OPERATING COST FORMULAS

AIRCRAFT TYPE: C-5A
ENGINE: JT9D-7

		1*	2*	3*
A	CREW PAY(INTERNATIONAL 6 MEN) =(.05(TO GW MAX)/1000) + 210		297	
B	INSURANCE=(.02)CT/U		211	
C	OIL=$.13/ENG/HOUR		.52	
D	AIRFRAME MAINTENANCE:			
	LABOR-$PER CYCLE =.2Wa/1000+24-(2520/((Wa/1000)+120))			75
	LABOR-$PER HOUR=.59($/CYCLE)	44		
	MATERIAL-$PER CYCLE=6.24Ca/10,000,000			212
	MATERIAL-$PER HOUR=3.08Ca/10,000,000	104		
	BURDEN-$PER CYCLE=1.8(LABOR $/CYCLE)			136
	BURDEN-$PER HOUR=1.8(LABOR $/HOUR)	80		
E	ENGINE MAINTENANCE:			
	LABOR-$PER CYCLE=(1.2+.12T/1000)Ne			25
	LABOR-$PER HOUR=(2.4+.108T/1000)Ne	27		
	MATERIAL-$PER CYCLE=20NeCe/10,000,000			81
	MATERIAL-$PER HOUR=25NeCe/10,000,000	101		
	BURDEN-$PER CYCLE=1.8(LABOR $/CYCLE)			44
	BURDEN-$PER HOUR=1.8(LABOR $/HOUR)	49		
F	DEPRECIATION:			
	AIRCRAFT=Ca/12U		785	
	AIRCRAFT SPARES=.1Ca/12U		78	
	ENGINE=CeNe/12U		94	
	ENGINE SPARES=.4CeNe/12U		37	
G	TOTALS			
	INTERNATIONAL(WITH CREW)	407	1502	572
	INTERNATIONAL(WITHOUT CREW)	407	1206	572

NOTE: FOR PURPOSES OF ILLUSTRATION, COSTS SHOWN ON THIS PAGE ARE BASED ON A UTILIZATION OF 3,600 HOURS WHICH, FOR THE VARIABLE UTILIZATION SCHEDULE, CORRESPONDS TO AN AVERAGE BLOCK TIME OF 4.0 HOURS.

*1 - DOLLARS PER REVENUE FLIGHT HOUR
2 - DOLLARS PER REVENUE BLOCK HOUR
3 - DOLLARS PER CYCLE (FLIGHT)

BIBLIOGRAPHY

Books

1. Schriever, Bernard A. and Seifert, William W. Air Transporation 1975 and Beyond: A Systems Approach. Copyright 1968.

2. United States Air Force Dictionary. Research Studies Institute, Air University, Air University Press, 1956, p. 493.

Manuals

3. C-5A Logistics Planning Manual, MER 416A. Marietta, Georgia: Lockheed-Georgia Company, October 1, 1969.

4. U.S. Department of the Air Force. Airlift Planning Factors AFM 76-2, 20 March 1972.

Periodicals

5. "A Gallery of USAF Weapons: The Cargo Planes." Air Force Magazine, Vol. 54, No. 5, May, 1971, pp. 158-160.

6. "Air Cargo." Distribution Worldwide, Vol. 71, No. 1, January, 1972, pp. 23-43.

7. "Air Cargo--The Sleeping Giant." Interavia, Vol. XXVI, January, 1971, pp. 31-33.

8. "Airlift and Sealift Forces." Associate Programs, 5th edition, Volume III. Maxwell AFB, Alabama: Air War College, Air University, USAF, 1968-1969.

9. "Boeing 747 Aircraft Operations and Cost Data--First Quarter, 1971." Aviation Weekly, Vol. 95, No. 1, July 5, 1971, p. 30.

10. "Boeing's Superjet (747)--The First Year in Service." Interavia, Vol. XXVI, June 1971, pp. 684-687.

11. "747F--The One and Only." Distribution Worldwide, Vol. 71, No. 1, January 1972, pp. 29-30.

12. "747F Will Test Air Cargo Market Potential." Aviation Week and Space Technology, Vol. 95, No. 22, November 29, 1971, pp. 25-26.

13. Bush, George M., Brig. Gen. "Army Mobility for Logistical Support." Military Engineer, Vol. 63, No. 415, September-October 1971, pp. 307-312.

14. "CAB Denies Added Cargo Rights." Aviation Weekly, Vol. 95, No. 21, November 22, 1971, p. 18.

15. Callander, Bruce. "Airlines Aim Flak at Cargo Flights." Air Force Times, Vol. 32, No. 18, December 8, 1971, p. 13.

16. Catton, Jack J., General. "Airlift for Strategic Mobility." Defense Industry Bulletin, Vol. 6, No. 11, November, 1970, pp. 6-8.

17. _____. "Strategic Airlift." Military Engineer, Vol. 63, No. 415, September-October 1971, pp. 313-314.

18. Cornell, Douglas. "Future International Air Cargo Prospects." Interavia, Vol. XXVI, January, 1971, pp. 40-41.

19. "Freight and Mail Traffic." Airline Management and Marketing, Vol. 3, No. 11, November/December 1971, pp. 61-62.

20. "From Desert Airlift to Global Caravan." Business Week, No. 2197, October 9, 1971, pp. 36-37.

21. Geddes, Phillip J. "The Jumbo Jet Cargo Handling Tangle." Interavia, Vol. XXVI, January, 1971, pp. 34-36.

22. Gilster, Herman L., Lt/Col, and Woodman, Lloyd Jr., Major. "Direct Aircraft Maintenance Costs--Military and Commercial." Air University Review, Vol. XXI, No. 5, July-August 1970, pp. 51-57.

23. Haxthausen, Bruce. "New Weapon for Red Baron in Cargo Market." Airline Management and Marketing, Vol. 4, No. 1, January/February 1972, pp. 32-33.

24. Hessman, James D. "Lennon Panel Considers Requirements for Sealift, Airlift." Armed Forces Journal, Vol. 109, No. 2, October, 1971, pp. 34-35.

25. _____. "Sealift Goes Mufti as Airlift Builds In-House Capability." Armed Forces Journal, Vol. 109, No. 7, March, 1972, p. 42.

26. Hieronymous, W. S. "Pacific Air Tonnage Soars as Dock Strike Continues." Aviation Weekly, Vol. 95, No. 11, September 13, 1971, p. 32.

27. "KLM, Sabena Using Main Deck of 747's for Cargo/Baggage." Aviation Weekly, Vol. 95, No. 23, December 6, 1971, p. 25.

28. Kinney, William A. "Strategic Airlift--An Evolution and a Revolution." Airman's Magazine, Vol. XIV, No. 8, August, 1970, pp. 17-21.

29. Levine, Richard J. "New GAO Report Indicates C-5As May Fail Some Missions, Require Too Much Upkeep." Wall Street Journal, Vol. LII, No. 114, p. 4.

30. Lineaweaver, F. R. Jr. "Tradeoffs in Shipping by Air." Distribution Worldwide, Vol. 70, No. 7, July, 1971, pp. 15-20.

31. "Lockheed Wide-Bodied Jet Market Analysis." Interavia, Vol. XXVI, August, 1971, pp. 894-896.

32. "MAC Airlifting Missions Surge." Air Force Times, Vol. 33, No. 1, August 9, 1972, p. 53.

33. "MAC Logs Less Traffic." Air Force Times, Vol. 31, No. 29, February 24, 1971, p. 3.

34. "North Atlantic Air Cargo and Mail Data--Year 1970." Aviation Weekly, Vol. 95, No. 3, July 19, 1971, pp. 40-41.

35. "North Atlantic Air Cargo and Mail Data--First 6 Months of 1971." Aviation Weekly, Vol. 95, No. 19, November 8, 1971, pp. 34-35.

36. Romberg, L. G. "Airfreight: The Billion Dollar Confusion." Airline Management and Marketing, Vol. 3, No. 9, September 1971, pp. 24-26.

37. Schemmer, B. F. "MAC's Private Airline." Armed Forces Journal, Vol. 110, No. 3, September 21, 1970, pp. 26-32.

38. "Sealift Command, MTMTS to Merge." Air Force Times, Vol. 31, No. 32, March 17, 1971, p. 36.

39. Sletmo, Gunnar, K. "Air Freight: A Growth Industry with Problems." Columbia Journal World Business, Vol. VI, No. 5, September/October, 1971, pp. 39-46.

40. Stites, J. D. "Cargo Terminal Analysis." Defense Transportation Journal, Vol. XXVII, No. 2, March/April 1971, pp. 36-40.

41. Sturn, Ted R. "MAC Is On The Move." Airman, Vol. XIV, No. 8, August, 1970, pp. 13-16.

42. "Three Boeing 747Cs Equipment Ordered by World Airways." Wall Street Journal, Vol. LII, No. 148, May 10, 1972, p. 8.

43. Tuttle, William G. T., Major. "Coming? Tandem Base Logistics Support." Army Logistician, Vol. 3, No. 6, November-December 1971, pp. 12-15.

44. Ulsamer, Edgar. "Boeing's Heavyweight Contender--the 747F." Air Force Magazine, Vol. 55, No. 1, January 1972, pp. 68-69.

45. USAF Rejects RAND's Study to Phaseout C-141s, Beef Up CRAF." Armed Forces Journal, Vol. 108, No. 3, October 5, 1970, p. 15.

46. "U.S. Airline Mail and Cargo--1970." Aviation Weekly, Vol. 94, No. 24, July 14, 1971, p. 47.

47. Watkins, H.D. "Carriers Seek Unprofitable Route Relief." Aviation Weekly, Vol. 96, No. 4, January 24, 1972, p. 28.

48. _____. "Sagging Cargo, Economy Cut Use of QC's." Aviation Weekly, Vol. 95, No. 5, August 2, 1971, p. 27.

49. Weiss, George. "A Look at Airlift in the Mid-1970s: Services Will Face Problems." Armed Forces Journal, Vol. 108, No. 15, April 5, 1971, pp. 28-31.

50. Whittaker, Philip N. Assistant Secretary of the Air Force, Installations and Logistics. "Intermodal Transportation Key to Strategic Mobility." Defense Transportation Journal, Vol. XXVII, No. 2, March-April, 1972, pp. 22-26.

51. Winston, D. C. "GAO Finds Progress on C-5A Problems." Aviation Weekly, Vol. 96, No. 16, April 17, 1972, p. 14.

52. Yoder, Harry D. "Logistics In Motion." Illustrative Ordnance, Vol. 55, March-April 1971, pp. 455-458.

Personal Interviews

53. Bergstad, Joseph P., Major. Military Airlift Command Briefing Officer for General Catton, Hq. Military Airlift Command, Scott Air Force Base, Illinois. Personal Interview, March 31, 1972.

54. Biancur, W. J., Major. Airlift Plans Officer, Pentagon, Washington, D.C. Personal Interview, June 26, 1972.

55. Brand, Joseph, Major. Comptroller Assistant, Hq. Military Airlift Command, Scott Air Force Base, Illinois. Personal Interview, March 31, 1972.

56. Detert, Walter O., GS-15. C-5A SPO Reliability Manager, ASD (YAEY) Wright-Patterson AFB, Ohio. Personal Interview, August 7, 1972.

57. Gorman, B. J., Col. J-4 Logistics Officer, Pentagon, Washington, D.C. Personal Interview, February 28, 1972.

58. Heiser, Joseph M. Jr., Lt General. Deputy Chief of Staff, U.S. Army, Logistics, School of Logistics Management, Wright-Patterson AFB, Ohio. Personal Interview, August 14, 1972.

59. Johnson, H. C., Col. J-4 Logistics Officer, Pentagon, Washington, D.C. Personal Interview, February 28, 1972.

60. Mace, Theodore, A., Col. Chief of Military Airlift Command Post Division, Hq. Military Airlift Command, Scott Air Force Base, Illinois. Personal Interview, March 31, 1972.

61. Odell, Paul, Lt Col. Comptroller, Hq. Military Airlift Command, Scott Air Force Base, Illinois. Personal Interview, March 31, 1972.

62. Rider, Graham W., Lt Col. Assistant Professor of Logistics Management, School of Logistics Management, Wright-Patterson AFB, Ohio. Personal Interview, July 12, 1972.

63. Sample, Robert W., Major. Military Airlift Command Briefing Officer, Pentagon, Washington, D.C. Personal Interview, June 26, 1972.

64. Seeger, Charles M., Col. Directorate of Commercial Airlift Air Transportation, Bolling Air Force Base, Washington. Personal Interview, June 26, 1972.

65. Shockey, Warren O., GS-15. MAC Airlift Industrial Fund Hq. Military Airlift Command, Scott Air Force Base, Illinois. Personal Interview, March 31, 1972.

66. Smith, W. F., Col. Director, Directorate of Transportation, Hq. AFLC, Wright-Patterson AFB, Ohio. Personal Interview, July 12, 1972.

67. Van Inwegan, Earl, Captain. Military Airlift Command Briefing Officer. Pentagon, Washington, D.C. Personal Interview, June 26, 1972.

68. Waring, John, Commander Logistics Officer. J-4 Division, Pentagon, Washington, D.C. Personal Interview, February 11, 1972.

69. Williams, Francis O., Captain. Airlift Procurement, Hq. AFLC, Wright-Patterson AFB, Ohio, Bldg. 262, Personal Interview, July 28, 1972.

70. Winegrad, Irving, CS-13. Crew and Age Office, C-5A SPO. Wright-Patterson AFB, Ohio. Personal Interview, August 7, 1972.

Public Documents

71. House of Representatives (H.R.) 8264 Bill, 92 Congress, 1st Session, House of Representatives, Commerce Committee, May 11, 1971.

72. Hughes, Phillip S. "Policies for Acquiring Commercial or Industrial Products and Services for Government Use." Transmittal Memorandum No. 1 to Circular No. A-76, August 30, 1967.

73. Military Airlift, H.A.S.C. 91-51. Hearings before the Subcommittee on Military Airlift of the Committee on Armed Services, House of Representatives, 91st Congress, 2nd Session, February 26, 1970.

74. Overseas Military Personnel, Charter Flights. H.R.S.C. No. 92-35. Hearings before the Special Subcommittee on Transportation of the Committee on Armed Services House of Representatives, 92 Congress, First Session, November 30, December 1, 2, 3, 1971.

75. _____. H.R.S.C. 92-37. Airlift Panel of the Special Subcommittee on Transportation of the Committee on Armed Services House of Representatives, 92 Congress, 2nd Session, January 27, 1972.

76. Senate Bill S.1821, 92 Congress, 1st Session. Report No. 92-503, Commerce Committee, November 19, 1971.

77. Transportation of Government Traffic by Civil Air Carriers. Hearings before the Subcommittee on Commerce. United States Senate, 92 Congress, First Session on S-1821. Serial No. 92-34, June 24 and September 30, 1971.

78. _____. 92 Congress, 1st Session, Senate Report No. 92-503, Committee on Commerce, November 19, 1971.

79. _____. Subcommittee on Aviation of the Committee on Congress. Congressional Record, Senate S5022, March 28, 1972.

Reports

80. "Airlift Service Management Report." Military Airlift Command (MAC) Tenth Annual Report, Prepared by DCS/ Comptroller Headquarters MAC, July 1967/June 1968.

81. _____. Eleventh Annual Report, Prepared by DCS/ Comptroller Headquarters MAC, July 1968/June 1969.

82. _____. Twelfth Annual Report, Prepared by DCS/ Comptroller Headquarters MAC, July 1969/June 1970.

83. _____. Thirteenth Annual Report, Prepared by DCS/Comptroller Headquarters, MAC, July 70/June 71.

84. "Airlift Sorties Required to Deploy Various Army Units (Saber Size)." United States Air Force Assistant Chief of Staff Studies and Analysis, June 1, 1971.

85. "Airlift Versatility Guaranteed." Lockheed-Georgia Company, Marietta, Georgia 30060, MER 464, May, 1969.

86. "Boeing 747 Airline Service Experience." Document D6-13050-862R3, Commercial Airplane Group, Boeing Aircraft Company, Seattle, Washington, Unpublished Material.

87. "Boeing 747F Freighter." D6-13920-R2. Boeing Aircraft Company, Seattle, Washington, January, 1971, Unpublished Material.

88. Brewer, Stanley H. and Rosenzweig, James E. Brewer, Professor of Transportation and Rosenzweig, Professor of Management, University of Washington, "Military Airlift and its Relationship to the Commercial Air Cargo Industry." 1967.

89. "Cargo Airplane Comparisons," by Air Cargo Analysis and Development Unit, Commercial Airplane Group S-3323, Boeing Company Renton, Washington, February 15, 1972.

90. "C-5A Air Transportable Dock," MER-434. Lockheed-Georgia Company, Marietta, Georgia, September, 1968 Unpublished Material.

91. "C-5A Operational Briefing," MER-446. Lockheed-Georgia Company, Marietta, Georgia, November, 1968.

92. "C-5A Operational Planning Report," MER 400A. Lockheed-Georgia Company, Marietta, Georgia, January 1969.

93. _____, MER 400B. Lockheed-Georgia Company, Marietta, Georgia, March, 1970.

94. "C-5A Progress Report 13." Lockheed-Georgia Company, Marietta, Georgia, July 24, 1969.

95. Detert, Walter O., Manning, Robert W., Wessel, James R. "Category II C-5A Reliability Demonstration Test." (Technical Report No. 71-18) Air Force Flight Test Center, Edwards Air Force Base, California, Air Force Systems Command, USAF, June 9, 1971.

96. Irions, C. C. "MAC's Dilemma: Competition with its Civil Reserve Air Fleet." Air War College, Air University, Report No. 4368, April 1971.

97. Kleiger, L. J. "Division of Military Air Transportation Between Civilian and Military Carriers." RAND Memorandum, RM-5924-PR, Santa Monica, California, May, 1969.

98. Midler, J. L. "A Flight Planning Model for the Military Airlift Command, AD 678504, RAND Corporation, Santa Monica, California, October, 1968.

99. Morgan, Fred J. "Commercial Airline Fleet Modernization and the Declining Military Airlift Potential." WN-7529-PR, RAND Corporation, Santa Monica, California, September, 1970.

100. _____. "Logistic Support of Wartime Air Operations in USAFE." (SECRET), Report Number WN-7865-PR, RAND Corporation, Santa Monica, California, May, 1972.

101. Norman, J. M. "Airline System Simulation and Economic Evaluation Program." AIAA Paper, No. 69-783, Lockheed-Georgia Company, Marietta, Georgia, July 16, 1969.

102. Rainey, Richard B. "Mobility--Airlift, Sealift and Prepositioning," P3303, RAND Corporation, February, 1966.

103. "Standard Method of Estimating Comparative Direct Operating Costs of Turbine Powered Transport Airplanes." By Air Transport Association of America. December, 1967.

Telephone Interviews

104. Bien, Albert J., Manager of Commercial Airplane Group Division of Boeing Aircraft Company. Telephone Interview, February 2, March 15, April 22, May 24, July 15, August 1, 1972.

105. Callendar, Bruce, Air Force Times Editorial Staff. Telephone Interview, January 8, 1972.

106. Cannon, Howard W. (Office of) U.S. Senator of the State of Nevada. Telephone Interview, March 3, 1972.

107. Grinder, Harold, Assistant to President Daley, World Airways Corporation. Telephone Interview, August 4, 1972.

108. Meyers, Allen G., III Lt.Col. Congressional Investigations Division Office of Legislative Liaison. Telephone Interview, April 13, 1972.

109. Magnuson, Warren G., (Office of) U.S. Senator of the State of Washington. Telephone Interview, February 8, 1972.

110. Meder, D. W. MAC Airlift Procurement. Telephone Interview, July 20, 1972.

111. Moore, Thomas L., Lt Col. PCS Plans and Operations, Pentagon, Washington, D.C. Telephone Interview, August 8, 1972.

112. Morgan, Fred J., Cargo Analyst. RAND Corporation, Santa Monica, California. Telephone Interview, June 21, 1972.

113. Norman, J. M. Operations Research Department, Advanced Design Division, Lockheed-Georgia Company, Marietta, Georgia. Telephone Interview, July 24, 1972.

114. Thannum, T. W., Captain. Combat Tactics, Military Airlift Command, Scott Air Force Base, Illinois. Telephone Interview, February 8, 1972.

115. Whalen, Charles W. (Office of) U.S. Congressman of the State of Ohio. Telephone Interview, March 10, 1972.

Thesis

116. Assay, Chester H., Lt Col, Sharp, David W., Major. "An Analysis of the Use of Inland Aerial Ports of Embarkation to Provide Through Plane Cargo Service to the Pacific Area." Thesis. Air Force Institute of Technology, SLSR-12-66, August 1966.

117. Condojani, Stanley S., Captain and Welsh, Warren P., Captain. "An Analysis of Critical Items in Cargo Aircraft." Wright-Patterson AFB, Ohio, SLSR-24-67, August 1967.

118. Eckerman, Charles R., Major and Sims, Robert L., Captain. "A Simulation and Analysis of the Effects of Increased Airlift Capacity on Forward Operating Base Air Terminal Facilities in the 1970's." Thesis. SLSR-30-66, August 1966.

119. Millimet, Stanley, Lt Col and Watts, David E., Lt Col "An Analysis of Intratheater Air Lines of Communication for the Support of Army Combat Forces in Low Intensity Warfare." Thesis. Air Force Institute of Technology, SLSR-44-67, August 1967.

120. Murphey, Thomas A., Lt Col; Brock, Alton C.; and Merritt, Norman L., Captain. "A Study of Airlift Requirements for Support of Limited War in 1970: A South American Case Study." Thesis. Air Force Institute of Technology, SLSR-33-66, August 1966.

Unpublished Material

121. "Air Force Reverses National Policy." Unpublished Report, November, 1971.

122. "Airlift Comments in Driscoll and Congressman Leggett's Letters." Unpublished Report, pp. 1-14.

123. "Airline Pressure in Support of S.1821." Memorandum for Secretary Seamans, General Ryan and Assistant Secretary Whittaker. Unpublished Report, November 22, 1971.

124. "Analysis of the Airlift Service Industrial Fund and Tariff Rate Structures. FY 74-FY78." Unpublished Report, June 15, 1972, pp. 1-36.

125. Biancur, W. J., Major. "Airlift Policy." Memorandum for the Secretary of Defense. Unpublished Report, August 13, 1971.

126. Bien, Albert J. Material on 747C/F in response to Captain Krebs and Galyen's letter dated March, 1972, April 12, 1972.

127. "Boeing 747 Convertible" by Boeing Aircraft Company, Seattle, Washington, D6-13050-1024. Unpublished Material, May, 1972.

128. "Boeing 747C Convertible Productivity Relative to Military Airlift Command Mobilization Value and Incentive Factors." A511, Boeing Aircraft Company, Seattle, Washington. Unpublished Report, July, 1972.

129. "Boeing 747 Freighter Progress Report." Boeing Aircraft Company, Seattle, Washington. Unpublished Material.

130. "Boeing 747 Program Review." Unpublished Report

131. "C-5A Capabilities and Comparison With Commercial Availability." Unpublished Report.

132. C-5A Progress Report. Lockheed-Georgia Company, Marietta, Georgia. Unpublished Material.

133. "DOD Airlift Transportation Costs." Unpublished Report Received from Airlift Industrial Fund Military Airlift Command Headquarters, Scott AFB, Illinois.

134. "Extracts from Subcommittee on Airlift Hearings." Unpublished Report, July 8, 1971. Received from Airlift Operations, Pentagon, Washington, D.C.

135. Leimer, Dean Lt. A Staff Study of the Relative Transportation Costs of Military and Civil Air Carriers [Draft]. March 1972. For the Office of the Secretary of Transportation, Unpublished Report, pp. 1-24.

136. MAC Comments on Witness Statements." Before the Committee on Commerce, Subcommittee on Aviation. Unpublished Report. June 7, 1971.

137. "MSC Operations." February, March, April 1972 Forecast. Unpublished Forecast, January 26, 1972.

138. "New Rate Structure is Basic Condition for Growth of Air Freight." Unpublished Report, February 18, 1972.

139. Ostrom, Lonnie L., Captain. "The Military Albatross: Strategic Mobility." School of Logistics Management, Wright-Patterson AFB, Ohio. Unpublished Report, pp. 1-10.

140. "Report No. 92.503." Pentagon, Washington, D.C. Unpublished Material, November 19, 1971.

141. Rider, Graham W., Lt Colonel and Ostrom, Lonnie L., Captain. "A Military Logistics Concept Applied." School of Logistics, Wright-Patterson AFB, Ohio. Unpublished Material, pp. 1-20.

142. "Statement of Issues Concerning Senate Bill 1821." Unpublished Report from Airlift Operations. Pentagon, Washington, D.C.

143. "Talking Paper on Senate Bill S.1821." Unpublished Report from Airlift Operations, Pentagon, Washington, D.C., pp. 1-10.

144. "The Role of the C-5A and the 747 in Military Deployments." Unpublished Report.

145. "The World Airways Boeing 747 Convertible in Military Airlift Command Operations." World Airways Company, Oakland, California, Unpublished Report, July, 1972.

146. "USAF C-5A." Lockheed-Georgia Company, Marietta, Georgia. Brochure, January 1, 1966.

147. "Witness Statement" for Secretary Whittaker. Senate Commerce Committee Aviation Subcommittee. Unpublished Report, June 24, 1971.

148. "World Airways 747-273C/MAC Configuration Review." DC-33532-1, Boeing Aircraft Company, Everett, Washington, Unpublished Report, July 12, 1972.