AFAPL-TR-72-73

AD 749474

A SELF-GENERATING OVERHEAT DETECTION SYSTEM FOR USE ON USAF AIRCRAFT

OTTO RIEMER

Thomas A. Edison Instrument Division

McGraw-Edison Company

TECHNICAL REPORT AFAPL-TR-72-73

AUGUST, 1972

D D C

RECEIVED

OCT 11 1972

B

Approved for public release;

distribution unlimited

Reproduced by

NATIONAL TECHNICAL

INFORMATION SERVICE

U S Department of Commerce

Springfield VA 22151

Air Force Aero Propulsion Laboratory

Air Force Systems Command

Wright-Patterson Air Force Base, Ohio 45433

135

NOTICE

When Government drawings, specifications, or other data are used for any purpose other than in connection with a definitely related Government procurement operation, the United States Government thereby incurs no responsibility nor any obligation whatsoever; and the fact that the government may have formulated, furnished, or in any way supplied the said drawings, specifications, or other data, is not to be regarded by implication or otherwise as in any manner licensing the holder or any other person or corporation, or conveying any rights or permission to manufacture, use, or sell any patented invention that may in any way be related thereto.

ACCESSION for
NTIS White Section ☑
DDC Buff Section ☐
UNANNOUNCED ☐
JUSTIFICATION .....
BY .....
DISTRIBUTION/AVAILABILITY CODES
Dist. AVAIL. and/or SPECIAL
6

Copies of this report should not be returned unless return is required by security considerations, contractual obligations, or notice on a specific document.

A SELF-GENERATING OVERHEAT DETECTION SYSTEM

FOR USE ON USAF AIRCRAFT

OTTO RIEMER

Details of illustrations in
this document may be better
studied on microfiche.

Approved for public release;
distribution unlimited

I-C

FOREWORD

This final report was prepared by Thomas A. Edison Instrument Division, McGraw-Edison Company, West Orange, New Jersey under Contract Number F33615-70-C-1271 and Task Number 304807.

The work was done under Project 3048 for the Air Force Aero Propulsion Laboratory. Principal Government contributions were made by Charles L. Delaney (AFAPL/SFH), the contract monitor, and William R. Allen (AFAPL/SFH), original contract monitor, Duane G. Fox (AFAPL/SFH), and Mr. Terry M. Trumble (AFAPL/SFH), all of whom provided welcome assistance and suggestions.

The principal investigator of this project was Otto W. Riemer. The following personnel contributed to the program: S. Strindberg (project engineer, sensor development); R. MacIntyre (sensor fabrication). Helpful guidance and suggestions were provided by A.T. Abromaitis, Director of Engineering and Research; R.F. Ryer, Section Head of Research and Development; J.J. Dietz, Director of New Product Development.

The report covers work done by the Contractor from 16 February 1970 to 30 September 1972 in the development and manufacture of 6 sets of equipment for the Air Force Aero Propulsion Laboratory, and from 10 January 1972 to 6 June 1972 in performance testing of seventh and eighth sets of equipment.

This technical report has been reviewed and is approved.

B.P. Botteri

B.P. BOTTERI
Chief, Fire Protection Branch
Fuels, Lubrication Division

Unclassified
Security Classification

DOCUMENT CONTROL DATA - R & D

(Security classification of title, body of abstract and indexing annotation must be entered when the overall report is classified)

1. ORIGINATING ACTIVITY *(Corporate author)* Thomas A. Edison Instrument Division McGraw-Edison Company	2a. REPORT SECURITY CLASSIFICATION Unclassified 2b. GROUP

3. REPORT TITLE

A SELF-GENERATING OVERHEAT DETECTION SYSTEM FOR USE ON USAF AIRCRAFT

4. DESCRIPTIVE NOTES *(Type of report and inclusive dates)*

Final Report 16 February 1970 to 30 September 72

5. AUTHOR(S) *(First name, middle initial, last name)*

Otto Riemer

6. REPORT DATE September 1972	7a. TOTAL NO. OF PAGES ~~126~~ 135	7b. NO. OF REFS NONE
8a. CONTRACT OR GRANT NO. F33615-70C-1271 b. PROJECT NO. 3048 c. TASK NO. 304807 d.	9a. ORIGINATOR'S REPORT NUMBER(S) 9b. OTHER REPORT NO(S) *(Any other numbers that may be assigned this report)* AFAPL-TR-72-73	

10. DISTRIBUTION STATEMENT

Approved for public release; distribution unlimited.

11. SUPPLEMENTARY NOTES	12. SPONSORING MILITARY ACTIVITY Air Force Aero Propulsion Laboratory Wright-Patterson Air Force Base Ohio 45433

13. ABSTRACT

This effort concerns the development, design, fabrication and testing of a self-generating overheat detection system for USAF aircraft. The system consists of a loop of sensor cable connected by way of a junction box and thermocouple type extension wires to a control unit. The developed sensor consists of a continuous coaxial cable which changes its electrical properties as cable temperature is changed. Here, cable thermoelectric voltage as well as impedance is utilized in establishing alarm signal levels. Theoretical work involving such factors as thermocouple signal transmission and detection, together with an investigation of cable materials and electronic componentry available for aircraft use is described. Test results of the sensors and associated electronics used for the prototype systems together with a description of operation is supplied. The performance testing of two completed systems under simulated environmental conditions is reported. A set of installation instructions and engineering drawings for the system are included in the appendix. It is concluded that, from the standpoints of long-term cable stability, discrete alarm detection, and false alarm free operation, the use of cable voltage as well as impedance in establishing alarm levels provides an effective means of overheat detection.

DD FORM 1 NOV 65 1473

Unclassified
Security Classification

I-A

Unclassified
Security Classification

14. KEY WORDS	LINK A ROLE	LINK A WT	LINK B ROLE	LINK B WT	LINK C ROLE	LINK C WT
Overheat Detection, Aircraft, Self-Generating, Thermoelectric, Sensor Cable, Alarm Temperature, Sensor Voltage, Sensor Junction Impedance.						

Unclassified
Security Classification

ABSTRACT

This effort concerns the development, design, fabrication, and testing of a self-generating overheat detection system for USAF aircraft. The system consists of a loop of sensor cable connected by way of a junction box and thermocouple type extension wires to a control unit. The developed sensor consists of a continuous coaxial cable which changes its electrical properties as cable temperature is changed. Here, cable thermoelectric voltage as well as impedance is utilized in establishing alarm signal levels. Theoretical work involving such factors as thermocouple signal transmission and detection, together with an investigation of cable materials and electronic componentry available for aircraft use is described. Test results of the sensors and associated electronics used for the prototype systems together with a description of operation is supplied. The performance testing of two completed systems under simulated environmental conditions is reported. A set of installation instructions and engineering drawings for the system are included in the appendix. It is concluded that, from the standpoints of long-term cable stability, discrete alarm detection, and false alarm free operation, the use of cable voltage as well as impedance in establishing alarm levels provides an effective means of overheat detection.

TABLE OF CONTENTS

Section		Page
I	INTRODUCTION	1
	1. Background	1
	2. Program	1
	3. System Performance Requirements	2
	4. General Results	3
II	THERMOELECTRIC SELF-GENERATING SENSOR	5
	1. Sensor Selection	5
	2. Basic Sensor Design	5
	3. Construction and Fabrication	8
	4. Measurement of Sensor Parameters	9
III	COUPLING SENSOR CABLES TO CONTROL UNIT	18
	1. Basic Approach	18
	2. Sensor Connections	18
	3. Junction Box	22
	4. Thermocouple Extension Cables	23
IV	THE CONTROL UNIT	25
	1. Approach	25
	2. Physical Description	25
	3. Electrical Description and Operation	26
V	EXAMINATION OF PERFORMANCE	40
	1. The Systems Tested	40
	2. Functional Tests	40
VI	SENSOR SHORT-CIRCUIT ANALYSIS	47
	1. Approach	47
	2. A Short in the Alarm Section	48
	3. A Short in the Unheated Section	50
VII	CONCLUSIONS AND RECOMMENDATIONS	53
	1. Conclusions	53
	2. Recommendations	55

Preceding page blank

TABLE OF CONTENTS (Cont'd)

Section		Page
	APPENDICES	57
I.	Analysis of Thermoelectric Sensor	58
II.	Determination of Voltage Settings for Alarm Set Point and Cold Junction Compensation	62
III.	Computer-Aided Analysis of System Performance	66
IV.	Installation Instructions	84
V.	Performance Testing	98

ILLUSTRATIONS

Figure		Page
1.	Thermal E.m.f. of Iron vs. Various Alloys Referenced to Room Temperature	7
2.	Thermoelectric Cable Junction Resistance vs. Temperature	11
3.	Thermal E.m.f. of Sensor Cable and Composite Cable	14
4.	Thermal E.m.f. of Contantan vs. Materials Shown	16
5.	Sensor Loop-To-Control Coupling	19
6.	Introduction of Electrochemical E.m.f.'s Produced by Saline Moisture Contamination of Sensor Connectors	21
7.	Schematic Diagram - Control Unit (Alarm Channel #1, For Example)	27

TABLE OF CONTENTS (Cont'd)

ILLUSTRATIONS (Cont'd)

Figure		Page
8.	Thermoelectric Sensor At Nominal Alarm Temperature Generating Alarm Signal to Control Input Impedance R_L	47
9.	Thermoelectric Sensor Presented as Paralleled Sources Supplying Control Input Impedance R_L	49
10.	Open Thermoelectric Sensor With Short R_S At The Control End	50
11.	Circuit For A Simple Thermocouple Made From Metals a And b	58
12.	Closed Loop of Dissimilar Metals Under A Thermal Gradient	59
13.	Simple Thermocouple Having A Parallel Dissimilar Metal Loop For One Leg	60
14.	Self-Generating Cable Detector Assy. Model No. 908480	86
15.	Self-Generating Cable Detector Assy. Model No. 908490	87
16.	Junction Box Assembly	88
17.	Firezone Type Thermocouple Extension Cable	89
18.	Junction Box-To-Control Unit Thermocouple Extension Cable Assembly	91
19.	Control Box Assembly	92
20.	System Wiring For Self-Generating Overheat Detection System	97

TABLE OF CONTENTS (Cont'd)

TABLES

Table		Page
I	Bench Microscope Measurements Made On Cross-Sections of Thermocouple Cable	8
II	"Basic" Program For Cold Junction and Alarm Set Point Settings	63
III	"Fortran" Program For R vs. T Cable Equation	66
IV	"Fortran" Program For Sectional Alarm Sensitivity	69
V	"Fortran" Program For Sensor Short Circuit Analysis	81

I

INTRODUCTION

1. BACKGROUND

Along with the development of modern day aircraft has grown the need for reliable overheat and fire detection systems capable of providing warning of the hazardous conditions which can occur in flight compartments and engine areas.

Of the existing systems which employ continuous sensor cables, those using semi-conductor filling materials providing thermistor type operation have done an acceptable job in detecting engine fires. However, despite relatively high levels of reliability, operational problems still exist since the prime cause of concern in present flying systems is failure by false alarming. Failures of this type are usually due to defects in the sensor cable or associated wiring.

Since these sensors provide a resistance parameter which is a function of the average temperature along the entire length of cable their use in overheat sensing applications is somewhat limited. In the protection of long bleed-air ducts, for example, the entire sensor length may normally be exposed to a high ambient, yet an alarm warning is desired when air at a higher temperature impinges on a relatively short section of sensor. Here, even the steepest slope thermistor type cable is limited in alarm detection

The objective of this program was consequently to develop a highly reliable self-generating signal overheat detection system for use on USAF aircraft. The approach to self generation selected was thermoelectric because it showed great promise as a meaningful solution to the problems discussed above.

2. PROGRAM

The purpose of the program was to provide a complete system for the detection of overheat conditions in aircraft engine compartments and other hazardous areas. The system was to be developed to a state such that it can be flight qualified in a flight test program conducted by the Air Force. The complete system was to include sensor, special wiring, control circuitry, and all components necessary to provide overheat detection capability on military aircraft. The effort was

divided, in the main, into the following parts: (1) design, testing and generation of specifications for the manufacture of the thermoelectric sensor cables, (2) examination and firm-up of the hardware required to couple sensor cables to controls through the compartmental obstructions to be encountered (pylons, firewalls, etc.), (3) the design and fabrication of control systems sufficient in number to supply six engine sets of systems for flight testing and systems for qualification testing, (4) concurrent with (1), (2), and (3), an examination of system performance, (5) the establishment of shipboard installation instructions.

A total of eight systems were, therefore, manufactured under this contract; four were designed for use on KC-135 aircraft and four for use on Convair 880 aircraft. One system of each type was subjected to system performance tests under this contract while the balance of the systems were delivered to the Air Force Aero Propulsion Laboratory. Actual flight testing was not a part of this contract.

3. SYSTEM PERFORMANCE REQUIREMENTS

Throughout this effort, all work was governed with an eye toward generating a system which would meet the requirements of MIL-F-7872C titled "Fire and Overheat Warning Systems, Continuous, Aircraft: Test and Installation of." Some of the more important requirements are shown below.

3.1 Alarm Temperature

The system shall be designed to alarm at pre-selected temperatures within a 375°F to 1000°F range. Each system must also be capable of monitoring up to three different temperature zones within an area (such as an engine compartment). Each zone would have its own alarm temperature within the 375°F to 1000°F range.

3.2 System Accuracy

An alarm shall occur within ±6% of the pre-determined alarm temperature.

3.3 Sensor Element

The system shall be designed such that a false alarm will not occur as a result of shorts, malfunctions, grounding, or breaks in the sensing circuit.

3.4 Sensor Connections

The system shall be designed to operate with the sensors

arranged in a series or parallel such that any single break or fracture will not cause the system to be inoperative.

3.5 Response Time

The system shall be capable of meeting the 5-second response time requirements of MIL-F-7872C.

3.6 Sensor Ruggedness

The sensors shall be of a very rugged design. If the sensing element is not of an inherently rugged nature it is required that the element be contained in a protective envelope.

3.7 Sensor Bending

The sensing cable shall be capable of being bent or formed to a three inch radius or less.

3.8 Sensor Length

The selected sensing cable shall be capable of production in continuous lengths ranging from 36 inches to 50 feet. If long lengths are not feasible, it is required that the sensors be capable of being connected in series with suitable connectors, for total lengths of 50 feet with no serious degradation of performance.

3.9 Push to Test Function (System Integrity)

The system shall include a functional test circuit to determine if the sensor and control unit are operational and capable of generating an alarm.

3.10 Low Alarm Temperatures

The system shall also be capable of providing an alarm when used in non-engine bay areas such as bleed air ducts.

3.11 Electrical Supply

The unit must operate using aircraft type unregulated 28 VDC or 115 VAC, 400 Hz power.

4. GENERAL RESULTS

During this program, some exceptions regarding sensor loop configurations had to be made. Since cable voltage as well as cable impedance was used to generate an alarm, different zone alarm temperatures provided different alarm signal voltage levels. Thus, sensors for different temperature zones could not be connected in series to a common alarm channel which, inherently,

has only one alarm setting. For similar reasons, the parallel connection of different zone loops to one channel could not be utilized without resistive attenuator pads which, unfortunately, imposed prohibitive errors on system performance.

The system resulting from this effort was tested and found to accommodate the operational requirements set forth under Contract F33615-70-C-1271 satisfactorily.

II

THERMOELECTRIC SELF-GENERATING SENSOR

1. SENSOR SELECTION

1.1 Design Considerations

In the course of investigating the various physical cable configurations that could be used for this program it was concluded that any self-generating sensor which is developed must be at least as rugged and operationally stable as the present Edison sensor cables. It was, therefore, decided that the self-generating sensor be constructed in like manner as present Edison Model 244 type B cables, which are of a coaxial construction and consist of a tubular dual-wall outer sheath, a center wire, and a compacted semi-conductor filler material. The thermocouple cable described in Edison Patent #2,805,272 appeared to have the desired electrical characteristics and, being of similar coaxial construction, seemed a likely choice for the foundation of this effort.

1.2 Description of Operation

In the conventional thermocouple which has found extensive use in temperature measuring applications, two dissimilar metals, usually in the form of wires, are welded or brazed together to form the hot sensing junction. The other ends of these wires are then connected to associated instrumentation and constitute the cold junction. A classical example of this sensor type are the probes used to measure exhaust gas temperature in turbojet engines. In the cable type thermocouple selected, the hot junction is not a fixed point but can form at any place along the length of the cable when localized heating occurs. In principle the hot junction is realized by placing two dissimilar metals side by side (concentrically) with the temperature dependent material in between. The filler or core material, being essentially an insulator at room temperature, becomes a good conductor when heated to some predetermined higher temperature. The actual thermocouple junction is formed between the center wire and sheath through this material.

2. BASIC SENSOR DESIGN

2.1 Cable Material

In a practical embodiment, the sensing cable consists of a tubular sheath of one material, a center wire of a different material, and an intervening filler material. Several characteristics of this material are of prime importance. Ideally,

the metals used must exhibit a high difference in thermoelectric coefficients in order that they provide a sufficiently high e.m.f.. Also, their electrical conductivity must be reasonably high to reduce voltage drop along the cable length, and their thermal conductivity must be low in order to minimize axial heat transfer away from a heated section of cable. In addition, the thermal e.m.f. should increase continuously with temperature and remain stable throughout the life of the sensor. The metals employed should be resistant to oxidization at the maximum expected environmental temperatures.

Figure 1 shows some data gathered on materials considered for use on the thermocouple cable. Here, the thermal e.m.f. of iron versus the alloys shown is plotted as a function of temperature. The choice of sensor construction that was selected and found to provide satisfactory results consists of a constantan center wire, and a coaxial inner-iron and outer-446 stainless steel double sheath, isolated from each other by the standard Edison manganese based filler material. Construction and environmental ruggedness is virtually equivalent to our Edison "Type B" sensor cable. From the curve of Figure 1 it can be seen that this selection provides a satisfactory voltage versus temperature gradient. The output from this sensor is similar to that from a constantan-iron thermocouple except for some small curvature which will be discussed later in the report.

Some recent literature which gives absolute thermoelectric power versus temperature is listed below. Thermal e.m.f. can be obtained by integrating this power between the temperatures of interest.

Bibliography

Armijo, J.S. "Analysis of Thermoelectric Mocroprobe," J. Electrochem. Sox. 115, p. 1153 (1968).

Cox, J., & W.H. Lucke "Thermoelectric Power and Resistivity of CR Fe Alloys," J. Appl. Phys. 38, p. 3853 (1967).

Fulkerson, Moore & McElroy "Thermal and Electrical Properties of Iron," J. Appl. Phys. 37, p. 2646 (1966).

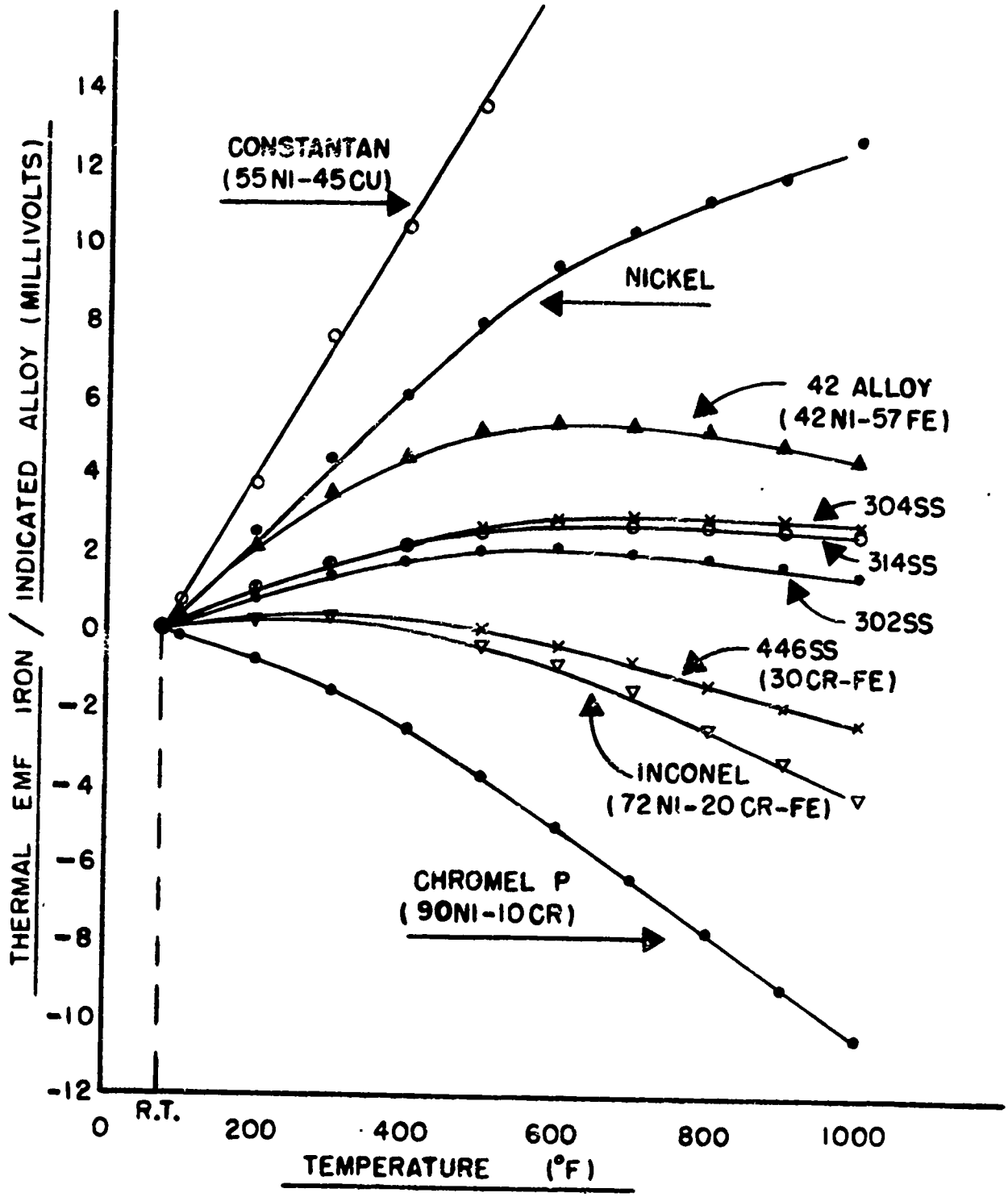

FIGURE 1. THERMAL E.M.F. OF IRON VS VARIOUS ALLOYS REFERENCED TO ROOM TEMPERATURE

3. CONSTRUCTION AND FABRICATION

Bulk quantities of the materials discussed previously were procured for manufacture. The sensors thus made were found to be quite adequate for this program. Some of the major factors encountered in fabrication are listed below.

3.1 Fabrication

Wire -- .020" diameter constantan. This material was obtained from the Wilber B. Driver Co., marked ".0201" Dia. RP1080 Cupron." Condition: annealed.

Oxide extrusion -- .060" nominal O.D.

Inner Sheath -- .084" O.D.X.007" wall, SAE #1008 steel, annealed, made by Superior Tube. SAE #1008 steel was selected over ingot iron which is slightly more pure, because of better fabricating properties.

Outer Sheath -- .098" O.D.X.010" wall, AISI 446 stainless. This material has proven itself in the field on our existing Edison model 244 type B sensors.

The extrusion and inner sheath were swaged to .070" diameter, loaded into the outer sheath and reswaged to .070" diameter. No major difficulties were encountered.

3.2 Physical Examination

Samples of fired cable were mounted for metallographic examination and dimensional measurement. Wire, oxide and sheath appeared normal. Typical measurement results are shown in Table I below

Table I

Bench Microscope Measurements Made On Cross-Sections Of Thermocouple Cable.

Cable Type	Wall	Oxide	Wire	Oxide	Wall
300	.0187	.0071	.0183	.0072	.0186
540	.0193	.0091	.0172	.0071	.0171
700	.0165	.0084	.0173	.0087	.0190
700	.0175	.0103	.0165	.0082	.0175
900	.0178	.0087	.0169	.0092	.0174

Here, cable type is the temperature at which the cable

has a resistivity of 5000 ohm-feet.

4. MEASUREMENT OF SENSOR PARAMETERS

For the purpose of system design (sensor and control unit) the sensor cable is considered to be equivalent to a Thevenin voltage source consisting of a no-load voltage, and a series source impedance, both being a function of cable temperature. The following information presents the results of data procured in the examination of these parameters.

4.1 Impedance

A common way of testing continuous cables is to expose the entire length to a predetermined oven temperature and measure cable impedance between center-wire and sheath with an ohmmeter. This technique will suffice as an acceptance test of a finished cable because any abnormally low resistance section along the length of the cable will register markedly on the total parallel impedance thus established.

By performing this procedure on one small section of the cable at a time, along the entire cable length, data from excessively high or low resistance sections will not conceal or overshadow normal temperature characteristics, or variations in these characteristics arising from variations in fabrication or processing.

Standard practice at Edison is to test a six-inch section every two feet along the length of the cable. This technique yields an accurate profile of cable resistance and reveals all but the most localized resistive extremes. Normal variations in resistance are generally due to normal nonuniformity of the cable cross-section along the cable length causing variations in the oxide thickness. Localized variations in cable resistance may be due to moisture ingress at a leaky end seal, inhomogeneities in the oxide mix, loss of a chip of oxide from the extrusion, etc..

This section checking technique was performed with an ohmmeter which applied between .2 and 1.0 volts to the cable under test. Continued testing brought to light the fact that cable impedance at thermocouple voltage levels was somewhat higher than the impedance at voltage levels of .2 to 1 volts encountered when the ohmmeter was employed.

The voltage sensitivity problem was obviated by doing away with the ohmmeter and using sensor thermocouple output voltage

to determine impedance. The output was first measured by a nulling type differential milli-voltmeter which had a very high input impedance (>100M). An adjustable resistance was then connected across the voltmeter input terminals. When the voltage across this adjustable resistor was equal to one-half the unloaded output, the value of the resistance was equal to the impedance of the six-inch section of cable being heated. This method has the advantage of measuring cable impedance at the very voltage level at which the cable is to operate and therefore, provides accurate data for the calculation of system alarm temperatures and signal levels.

Plots of cable resistivity (ohm-feet) versus temperature for both the ohmmeter and one-half voltage method for a family of cables with various characteristic temperatures (the temperature at which the resistivity of a particular cable is 5,000 ohm-ft.) are shown in Figure 2.

The relation between resistance and temperature can be seen to be similar to the resistance of many thermistor type semiconductors over considerable ranges. The resistance (for a given length) at a given temperature can be determined accurately by the equation

$$R = (R_0)e^{(B/T)} \qquad (1)$$

where

T = absolute temperature in Degrees Rankine (460 + Deg.F.).

R = resistance in ohm-feet at temperature T.

R_0 = constant in ohm-feet.

B = the thermistor "slope" of the temperature resistance characteristic in degrees Rankine.

Here, cable resistance increases to a very high level but, being limited by the electrophysical properties of this cable, does not become infinite as the equation would imply. As temperature approaches infinity, the minimum value of cable resistance is limited by the ohmic resistance of the center wire and sheath and does not become zero.

The ohmic differences between the two sets of curves is found to increase from a small value of about seven percent to

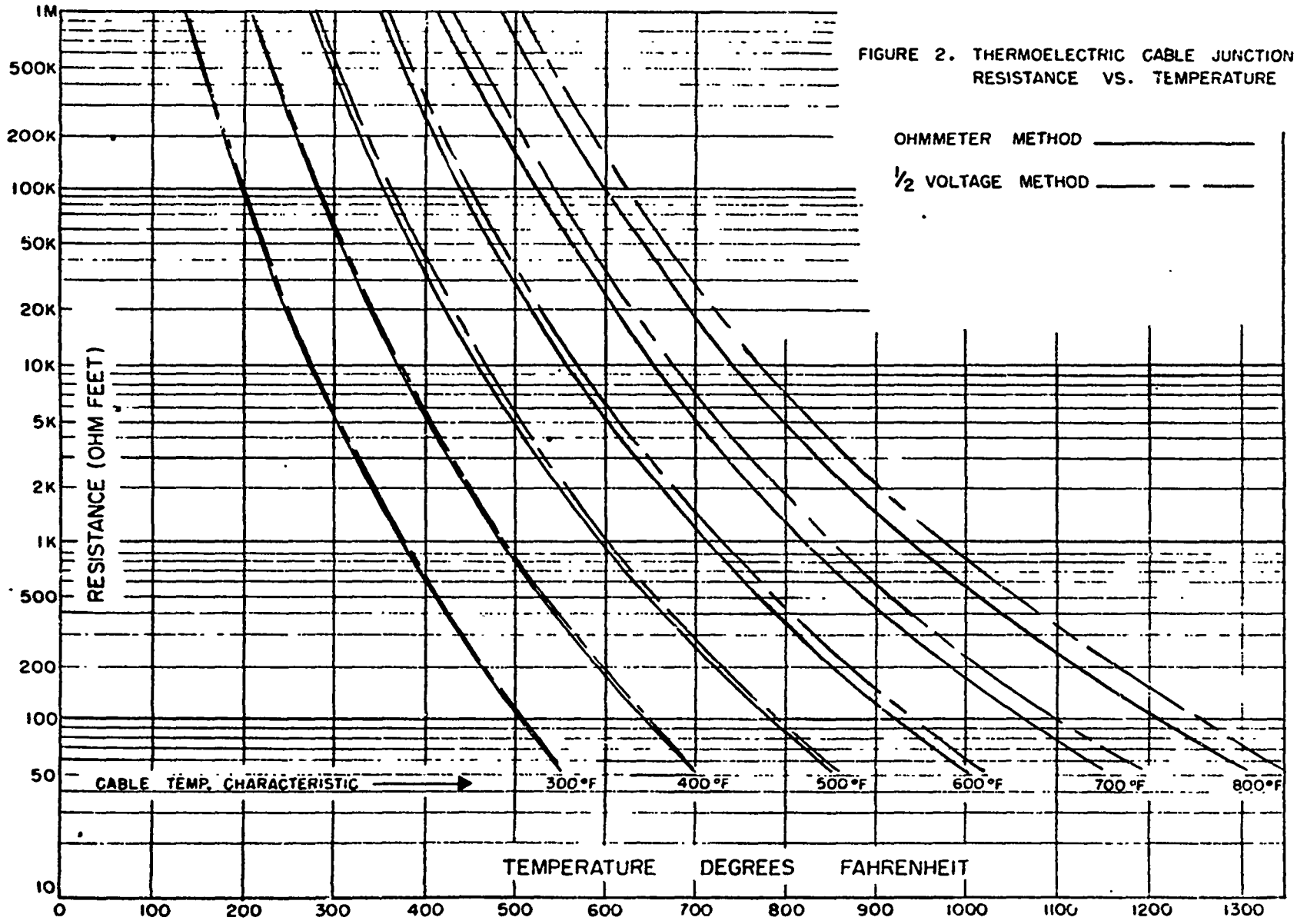

FIGURE 2. THERMOELECTRIC CABLE JUNCTION RESISTANCE VS. TEMPERATURE

1.1 1.2 1.3

about fifty percent as characteristic temperature increases from 300°F to 800°F. Keeping in mind equation (1), however, these differences do not represent unacceptable shifts in temperature. That is, for the same resistivity of 5,000 ohm-feet, the increase in characteristic temperature from the ohmmeter method to the one-half voltage method varies from about one to four percent as characteristic temperature increases from 300°F to 800°F. This performance clearly demonstrates that, from the standpoint of fabrication and manufacture, the "family" of thermocouple cables is under control and that desired changes can be obtained by interpolating thermistor mix formulas.

4.2 Thermoelectric Voltage

Whenever the junctions of a closed circuit formed by dissimilar metals are exposed to a temperature difference, an e.m.f. is generated whose magnitude is dependent on the difference in junction temperatures. This phenomenon is known as the first thermoelectric or Seebeck effect. There are two additional thermoelectric effects known as the Peltier and Thompson effects, but these are not directly involved in this aspect of voltage generation. The thermocouple voltage generated by the sensor is formed in precisely this manner, the exception being that its junction has a temperature dependent impedance.

It was mentioned previously that the sensor could be considered as a Thevenin voltage source whose impedance was that of the filler material. This voltage is readily determined by examining the thermocouple voltage versus temperature characteristic of the metal materials employed. Figure 3 shows plots of the results obtained in measuring the thermocouple voltage generated by the sensor cable, and a composite thermocouple cable consisting of a constantan wire (first material) connected to SAE #1008 steel tubing on which had been extruded a tube of AISI #446 stainless steel (second material). This configuration duplicated very closely the Thevenin voltage generating junction existing in the sensor cable where contact is made between center-wire and inner sheath but voltage is sensed from center-wire to outer sheath. A plot of constantan vs. iron voltage through the same temperature range (derived from values obtained from data from National Bureau of Standards Circular 561) is shown for comparison.

Data was obtained by concurrently measuring the voltage of the sensor cable, the composite junction cable, and then

Preceding page blank

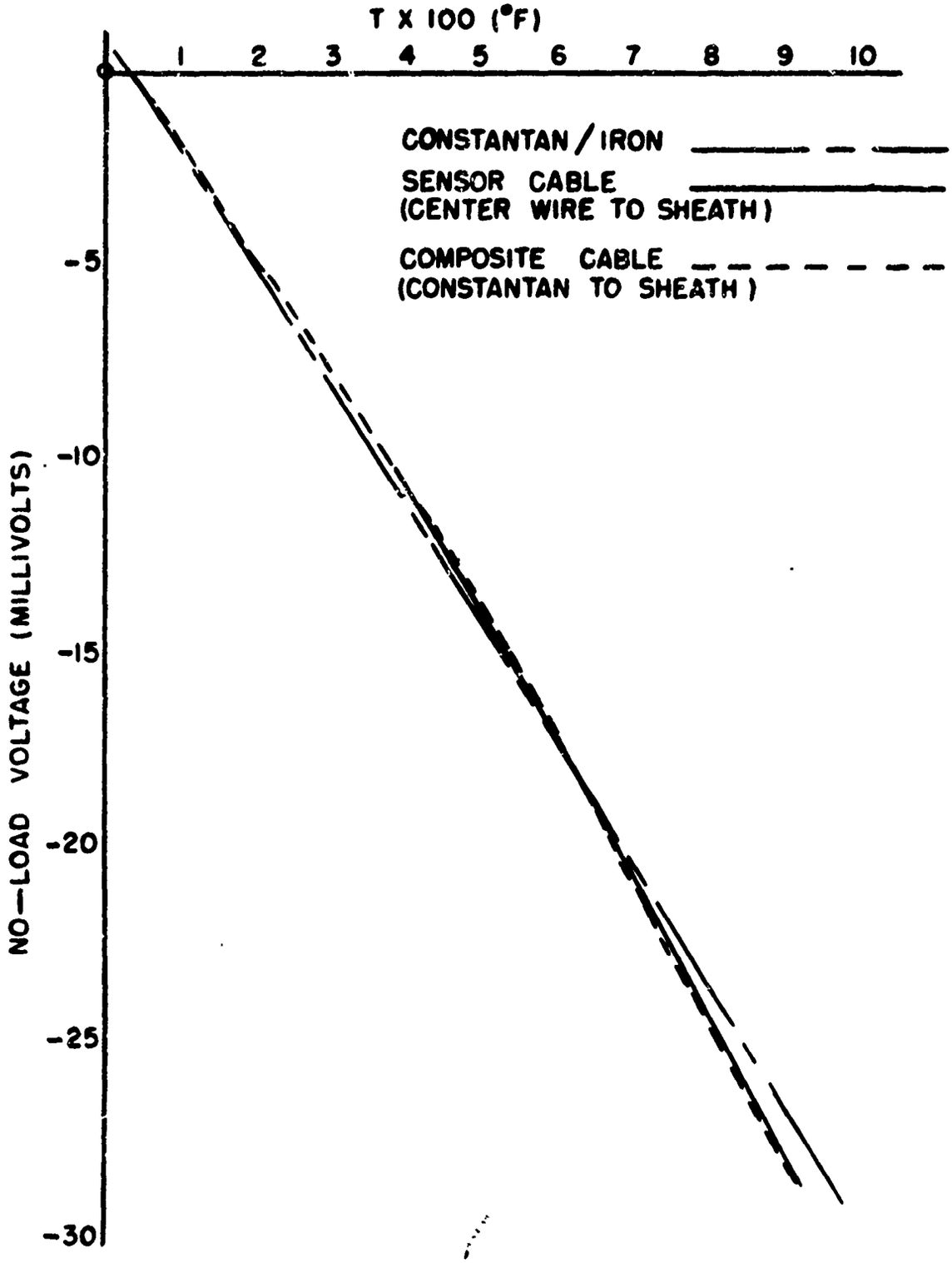

FIGURE 3. THERMAL E.M.F. OF SENSOR CABLE AND COMPOSITE CABLE

the voltage of a calibrated constantan-iron thermocouple all immersed in the same temperature. Here, the same type of null-balancing millivoltmeter referred to previously, was used to obtain no-load voltage measurements. Room temperature was then recorded. The calibrated constantan-iron thermocouple was then employed in a cold junction compensated potentiometer pyrometer to accurately determine immersion temperature. The voltage gradients from room temperature to immersion temperature of both the composite thermocouple cable and the sensor cable were then referenced to the calibrated constantan iron thermocouple whose voltage temperature characteristic is well defined. Throughout these tests sensor voltage was measured from the center wire with reference to the sheath, resulting in a negative voltage. Measurement accuracy was in the order of ±5°F.

Even allowing for measurement error, the plots clearly show that both the sensor cable and the composite cable assembly tend to follow the constantan-iron curve but have a bowed contour. Further investigation and analysis indicates that the bow is actually due to the fact that the voltage between the constantan center wire and outer 446 stainless steel sheath is in reality the resultant of two thermocouple junctions in series. Here, one junction consists of the materials previously discussed, namely that between the constantan center wire and 1008 steel inner sheath coupled by the filler material. The other junction consists of the 1008 inner sheath and the 446 stainless outer sheath loaded down by their contact resistance along the length of the extruded cable. Figure 4 shows plots of voltages generated by constantan and 1008 steel, constantan and 446 stainless steel, and constantan and iron as a reference. Here again, bowing, expecially of constantan and 446, is evident.

The loop currents generated by and flowing between the inner and outer sheaths, as explained in Appendix I thus appear to contribute to this curvature.

In the calibration and testing of the sensor cables it was found that the bowed character of the cable voltage was fairly consistent and that voltage versus temperature data could be repeated to within 5 to 10 degrees (or about 1 1/4 percent) of temperature.

The e.m.f. of constantan-iron thermocouples can be expressed with reasonable accuracy by the expression

$$E = aT + bT^2 \qquad (2)$$

where a and b are constants and T is the difference temperature

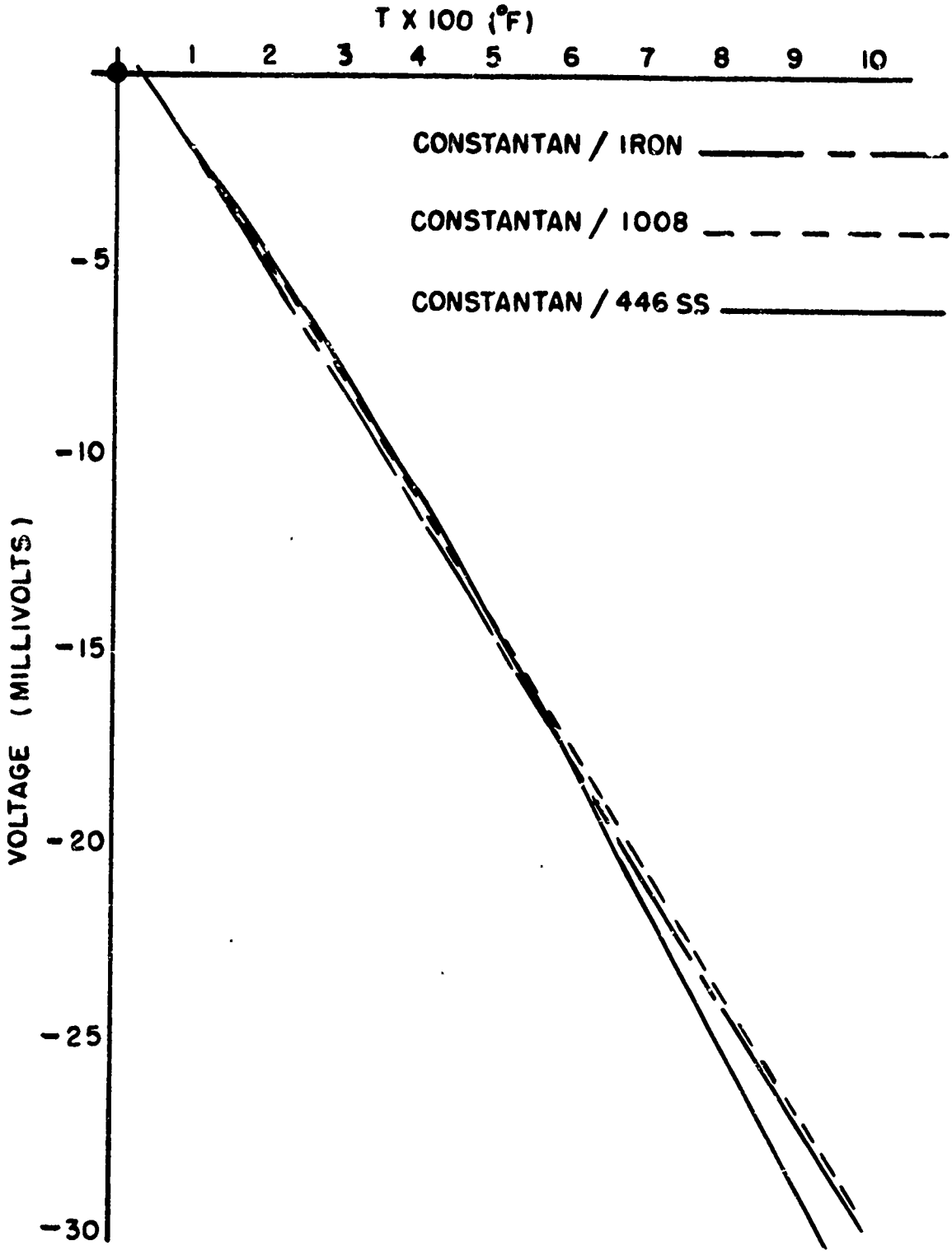

FIGURE 4. THERMAL E.M.F. OF CONSTANTAN VS. MATERIALS SHOWN

between the hot and cold junctions.

Because of its bowed curvature the voltage versus temperature characteristic of the thermoelectric cable could not be accurately represented by this equation.

By means of a General Electric time sharing computer program, POLFT $***, which fits, by least-square deviation, any data to a polynomial of the form $y = a + bx + cx^2 + dx^3 + \ldots$ the following equation was established from the empirical data for future use.

$$E_{TH} = (8.449633)(10^{-1}) - (2.7585907)(10^{-2})(F) - (3.3917856)(10^{-6})(F^2) - (1.0470123)(10^{-9})(F^3) \quad (3)$$

Here E_{TH} = sensor Thevenin voltage referenced to 30.125°F (the temperature at which $E_{TH} = 0$)

F = sensor temperature, degrees Fahrenheit.

III

COUPLING SENSOR CABLES TO THE CONTROL UNIT

1. BASIC APPROACH

In both the Introduction and Section II attention was drawn to the fact that the sensors used for different zone alarm temperatures would generate different thermocouple alarm signal voltage levels. As was also explained, the consequence of this feature is that sensor loops for different zone temperatures cannot be connected in series or parallel to one alarm channel without incurring prohibitive losses in system accuracy. This holds true particularly for the systems and temperature ranges specified under this contract; 575°F and 765°F for one engine set, and 450°F, 675°F, and 850°F for a second engine set. Since, as per MIL-F-7872C, the total system error allowed is ±6% of alarm temperature, none of the systems described above could be monitored by one alarm channel without incurring excessive error.

Taking into account the factors of zone-sensor signal uniqueness, thermocouple signal levels, thermal gradients from zone to control unit, a sensor loop-to-control system was formulated, and found to work satisfactorily. Figure 5 presents the basic per-zone configuration.

The loop system consists of a thermoelectric sensor cable, both ends of which are connected, by way of inert extension cables (when required), to a junction box. In turn, the loop is continued through the junction box and an engine compartment type connector, and then through thermocouple type extension wires to the associated alarm channel in the control unit.

2. SENSOR CONNECTIONS

As shown in Figure 5 both the center wire (constantan) and outer sheath (446 stainless steel) loops are returned to the junction box. From the points of view of ruggedness and reliability, it was decided to utilize cable connectors which are similar in construction to those employed on our Edison Model 244 type B cables. Refer to sensor cable Figures 14 and 15 in Appendix IV.

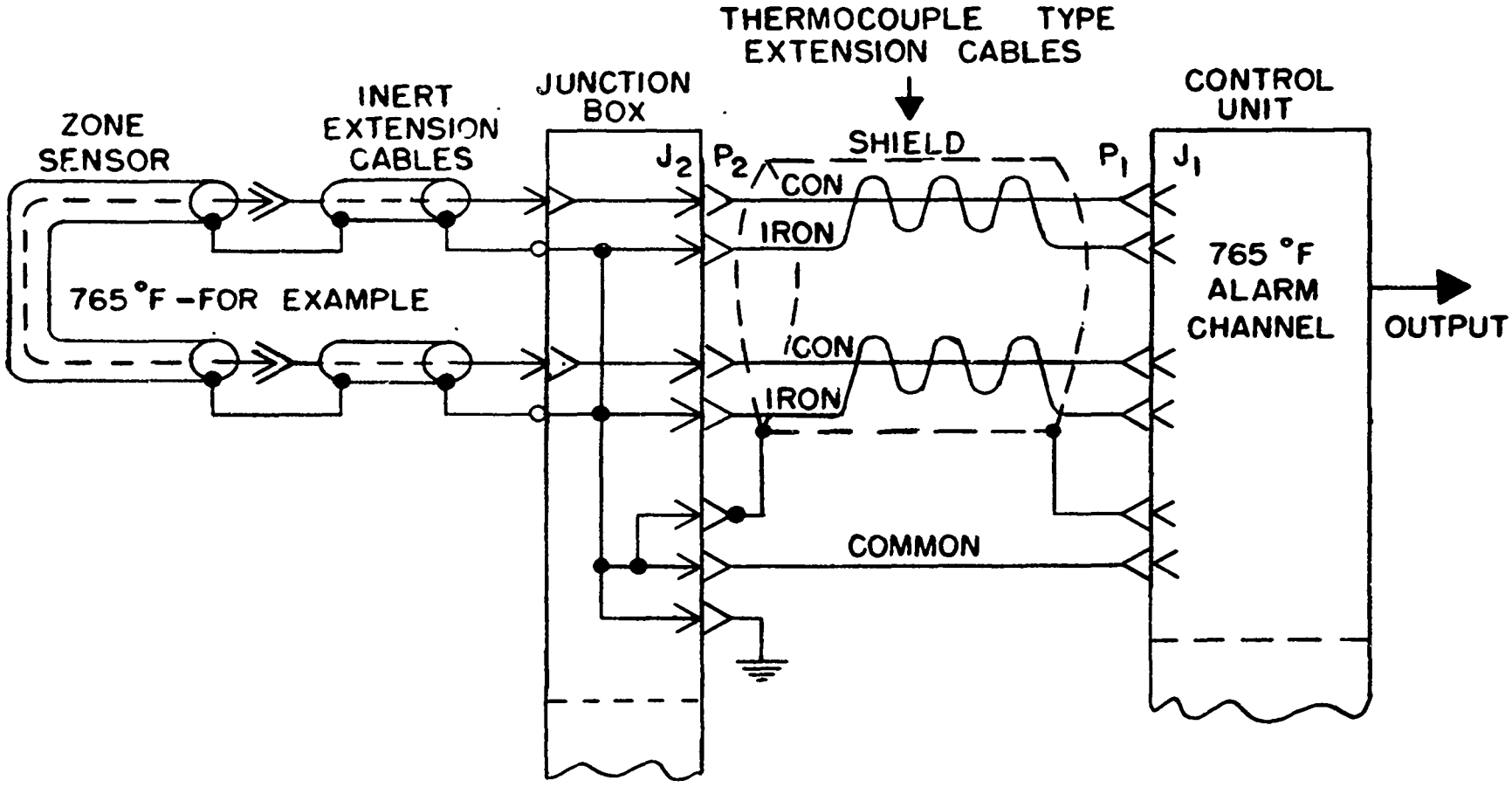

FIGURE 5. SENSOR LOOP - TO - CONTROL COUPLING

2.1 Connector Contamination

An important consideration in the interconnection of sensor cables is that no false alarms should be generated by saline moisture contamination. Since this moisture is a good electrolyte, it could permit electrochemical e.m.f.'s to be superimposed in parallel across the center wire and sheath function of the cable as shown in Figure 6. Here, the source would consist of an electrochemical battery and its internal resistance.

An investigation of standard Edison sensor connectors contemplated for this application revealed that any male connector exposed to saline moisture for any period of time would not generate signals adversely affecting system performance. Standard Edison female connectors, however, did give rise to source voltage which could generate false alarms consistently for long term exposures and sporadically for short term exposure.

The saline test was made by connecting one end of a sensor cable to a test circuit equivalent to an alarm channel, and immersing the connector assembly on the other end of the cable into a five percent (by weight) solution of sodium chloride.

Continued examination revealed that the female connector source produced signals of either reverse or like polarity as produced by the sensor cable. This was found to be due to variations in the rate of corrosion of the connector parts caused, in the main, by slight variations in composition, surface finish, relative passivation, etc.. Here voltages in the order of .1 to .2 volts were encountered at initial immersion with source impedances in the order of 200,000 to 600,000 ohms, but on occasion, low enough to permit the generation of a false alarm. Prolonged exposure resulted in a lower voltage source with like polarity (same as sensor) and a disproportionately lower source impedance. Additional testing of the female sensor connectors isolated the materials which were generating this strong electrochemical voltage. It was found that by nickel plating one part and changing the materials in three others and by loading the cable with about 2,000 ohms that the standard Edison connector configuration could still be used. When immersed, the resulting connector configuration gave rise to electrochemical voltages which, on a short term or long term basis, were too weak to cause an alarm.

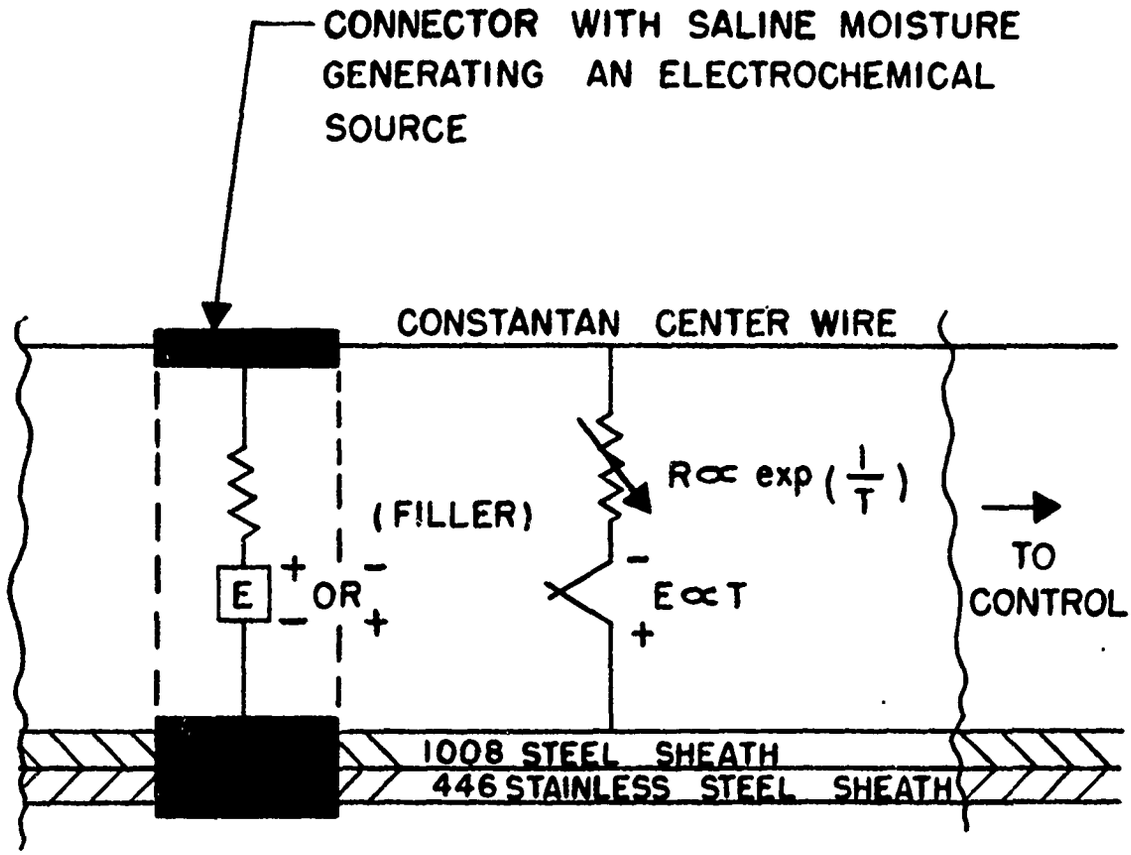

FIGURE 6. INTRODUCTION OF ELECTROCHEMICAL E.M.F.'S PRODUCED BY SALINE MOISTURE CONTAMINATION OF SENSOR CONNECTORS

Signals produced by the immersion of a broken sensor cable into salt water were examined and found to be of opposite polarity to those produced by thermoelectric operation. Short term (seconds) to long term (weeks) immersion resulted in "off" biasing signals equivalent to an increase in alarm setting of about 5 to 10 degrees. Thus prolonged immersion of a broken cable would, at worst, cause the system to require higher alarm temperatures but not cause false alarms.

3. JUNCTION BOX

The thermoelectric cable, by virtue of its uninsulated outer sheath, resembles a grounded signal source when clamped to an air frame. Here, because of contaminative films on the sensor exterior, grounding by way of standard mounting clamps can, at best, be considered a low-quality ground of variable resistance.

The employment of shielded twisted pairs of iron-constantan thermocouple extension wire, providing noise signal rejection and thermoelectric compatability between sensor and control unit, present a problem in adaptive connector hardware.

The use of a junction box proved to be the solution to these problems. The box is so designed that it can be electrically bonded to an aircraft ground plane and therefore be used as a common point for the entire detection system. It also offers an installation advantage because it can be mounted on engine doors, providing a convenient point of disconnection when doors containing mounted sensor cables are removed for engine overhaul, etc.. Here, six modified Edison type sensor cable female receptacles providing electrical entry sufficient for three sensor loops (three zones) are mounted on one side, and by way of internal wiring consisting of fire zone type constantan and iron wire, are connected to the associated constantan and iron pins of an engine compartment type receptacle located on the opposite side.

The box, fabricated from passivated stainless steel, was made rugged in construction to withstand the extreme environmental conditions encountered in aircraft engine areas.

4. THERMOCOUPLE EXTENSION CABLES

In the field of thermocouple thermometry there are instances where copper wires are used to join the wires from the thermocouple to associated instrumentation. In many instances the reference junction so formed (thermocouple wire to copper wire) is not at a fixed temperature and no meaningful relationship between net voltage and sensed temperature is achieved unless additional means of cold junction compensation is employed. Here, unless fixed temperature baths are used, temperature sensing componentry and associated wiring external to the instrumentation are required to monitor the varying temperature of this junction. This approach was considered too burdensome for the overheat detection system because extra wiring would have to be extended from the control unit to the junction box, which now would have to contain a temperature sensing element. This arrangement would also be somewhat hazardous because an open in this wiring, or the element, could be sensed by the control unit as an extreme drop in junction temperature causing, in many instances, a large increase in net signal voltage resulting in a false alarm. The additional circuitry required to override this condition was deemed excessive for this application.

Consideration was given to the use of coaxial cable similar in construction to the sensor cable with inert filler material. This approach was found practical for extending zone loops over short distances and was successfully employed in linking certain engine zone loops to the junction box which was located in the same engine (refer to Figure 5). From the standpoints of handling-flexibility and noise signal rejection extensions of this kind covering longer distances, such as from an engine zone to a control unit located in the fuselage portion of multi-engine aircraft, appeared impractical.

The approach selected was to use thermocouple extension wires of equivalent materials (constantan and iron) constructed in the form of fire zone wire to meet the requirements of MIL-W-25038A (USAF), but so arranged as to provide the wiring necessary for one zone (refer to Figure 17 in Appendix IV and Figure 5). The reliability of this type of wire and cable construction has already been extablished in the aircraft industry.

Constantan extension wire for this cable assembly was available. Material thermoelectrically equal to the 446 stainless steel sheath portion of the sensor cable, however, was not readily obtainable.

As stated previously in this report, the zone alarm temperature established for this program range from 450°F to 850°F. The continuous operating ambient temperature of the junction box is a maximum of 350°F.

Examination of the thermoelectric plots of sensor cable voltage and constantan-iron voltage in Figure 3 reveals a difference of no more than about 20°F from room temperature to 800°F. Since the thermoelectric gradient between sensor loop and control would yield signal voltages representing alarm temperatures which were off by no more and typically much less than this amount, it was decided that standard constantan and iron could be used in place of 446 stainless steel without too great a loss in alarm accuracy.

With this selection of extension wire materials, zone temperatures would thus be referenced to a cold junction of equivalent materials in the control unit where automatic cold junction compensation could be readily employed to reference sensor thermocouple voltages to the zero-millivolt temperature level of the cold junction (32°F for iron-constantan, for example).

IV

THE CONTROL UNIT

1. APPROACH

The control unit was constructed with the objective of accommodating three important factors. First, because of the sensor signal uniqueness discussed previously, alarm channels were formulated on a per-zone basis. Here, sensor signals were handled on an individual basis from input to output circuitry through amplification, to alarm relay output, the only commonality being one set of contacts on all the alarm relays which were joined in parallel for master warning actuation. Second, since this project specified two different systems, two zone and three zone, circuit assembly layouts were designed to accommodate three channels where any one of the three channels or any two, if so desired, could be readily omitted from the overall assembly. Third, a fault in any one channel (causing a false alarm display or no display on test) would still allow observation of system performance by way of individual overheat warning lights of the other zone sensors and channels still operating.

2. PHYSICAL DESCRIPTION

All three (or two) alarm channels are assembled in a single aluminum gasket sealed control unit assembly (refer to Figure 19 in Appendix IV). Electrical entry of both ends of the sensor loop circuits for all three (or two) zones is provided by means of a MIL-C-5015D type electrical receptacle containing contacts of copper, and gold-over-nickel plated iron and constantan materials. This connector is the low-temperature equivalent to the high temperature connector employed in the junction box. Connections for electrical power, master and fire light warning, and test actuation are provided by way of a jam nut type receptacle manufactured to meet MIL-C-26482.

Both size and weight of the assembly made necessary the use of vibration isolators. These isolators were of a general purpose type capable of isolating the control against not only vibration but also high shock. Their rugged construction allows mounting in any one of three planes.

2.1 Specifications

2.1.1. Electrical Power: Channels - 115 VAC, 400 Hz; Test and Alarm Circuitry - 28 VDC. Both AC and DC power in accordance with MIL-STD-704, condition B.

2.1.2. Power Consumption: 10 watts, exclusive of alarm and test circuitry.

2.1.3. Alarm Contact Rating: 1 ampere at 115 VAC or 2 amperes at 28 VDC, resistive load.

2.1.4. Signal Receptacle: T.A. Edison P/N 908419

2.1.5. Power Receptacle: MS-3114H14C-15P

2.1.6. Weight: 10.5 pounds

2.1.7. Ambient Temperature:

Operating: -55°C to +71°C
Storage: -55°C to +90°C

2.1.8. Alarm Temperature (Deg. F.):

Control	ZONES 1	2	3
908579-2	--	575	765
908579-3	450	675	850

3. ELECTRICAL DESCRIPTION AND OPERATION (Refer to Schematic Diagram shown in Figure 7)

From input to output each alarm channel contains, in turn, a shielded input assembly consisting of an alarm setpoint input circuit with automatic cold junction compensation, an input filter network, and a low level chopper stabilized input amplifier; and an output amplifier driving a two pole double throw alarm output relay.

Sensor-to-alarm relay integrity is examined by means of a relay operated test circuit assigned to each channel. A master warning reset network operates in conjunction with one set of contacts of each output relay.

A dual regulated supply provides power to all channels and test networks. In addition, a signal suppressing network

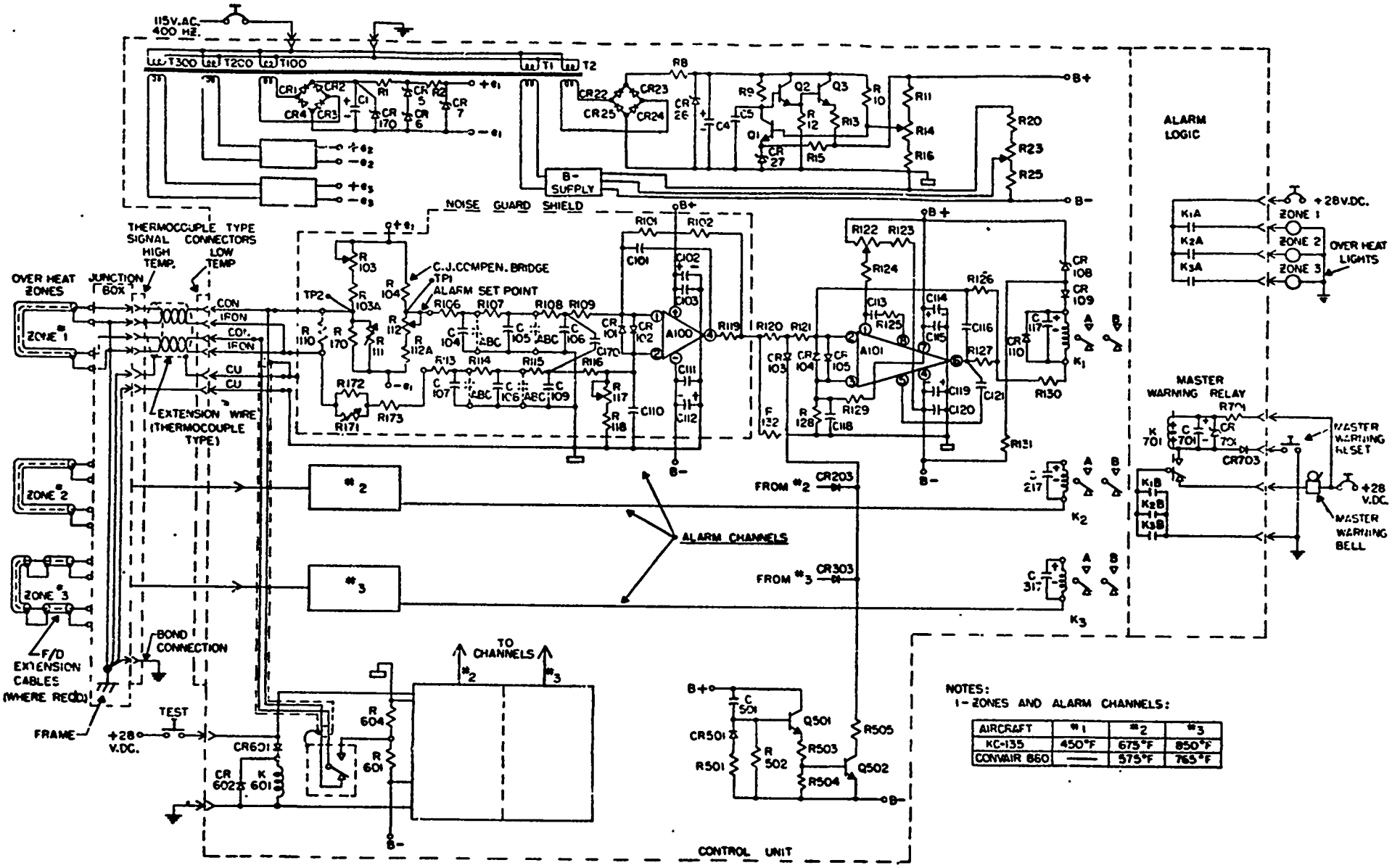

NOTES:
1- ZONES AND ALARM CHANNELS:

AIRCRAFT	#1	#2	#3
KC-135	450°F	675°F	850°F
CONVAIR 880	——	575°F	765°F

FIGURE 7. SCHEMATIC DIAGRAM - CONTROL UNIT (ALARM CHANNEL #1, FOR EXAMPLE)

is connected to the outputs of all of the chopper amplifiers to prevent the generation of spurious signals during power interruption. Each alarm set point circuit is powered by its own isolated zener regulated supply.

3.1 Input Circuitry

Since millivolt signal transmission is accomplished by way of thermocouple extension wires whose length and location are in large part optional, and since sensor cables are joined to a common ground plane located at or near the junction box, differential input circuitry was selected as the best approach to protect against both coupled and ground loop noise signals. Here both ends of the sensor center wire loop are connected by way of constantan extension cables to one input side of the associated alarm channel. The sensor sheath is connected by way of iron extension cables to the other input side. Here two iron wires as well as two constantan wires were used to provide a closer twist in each pair of fire zone extension leads. Both sets of signal wires are extended from the signal connector to the input circuitry where they are eventually connected across a 2000 ohm resistor which provides loading from center wire to sheath against possible spurious signals generated by saline contamination of the sensor cable connectors. A signal shield guard is provided from junction box to input stage. In addition a separate wire is provided to reference amplifier circuitry to the system common at the junction box.

3.2 Alarm Set Point and Cold Junction Compensation Bridge

(Refer to alarm channel for zone 1 in Figure 7.)

Alarm set point adjustment and cold junction compensation are provided by a bridge network located at the input. Power to the bridge is provided by its own isolated zener regulated supply e_1. In effect, one side of the input is a series circuit consisting of the constantan portion of the thermoelectric sensor, the output terminals of the bridge network, a filter circuit, and the inverting terminal of input amplifier A100. The other side of the differential input is a series circuit consisting of the sheath portion of the sensor cable, by way of the iron extension wire, a similar filter circuit, and the noninverting terminal of the input amplifier.

In the temperature range above, through, and below 32°F cold junction voltage respectively opposes, is equal

Preceding page blank

to and then aids sensor cable alarm voltage. The bridge circuit was so designed as to nullify this variable.

The cold junction temperature sensing portion of the bridge consists of the series circuit of variable resistor R103, resistor R103A, and the parallel network of resistor R170 and temperature sensing resistor R111. Here a change in voltage with temperature (millivolts per degree) across output terminal TP2 and the bottom of the bridge, is provided by temperature sensing resistor R111. The set point side of the bridge consists of resistor R104, variable resistor R112 and resistor R112A. The voltage from output terminal TP1 to the bottom of the bridge consists of the sum of the loaded equivalent of sensor cable voltage at alarm and the voltage existing across TP2 and the bottom of the bridge at 32°F. The resultant bridge voltage across TP1 and TP2, therefore, is equal and opposite to the sum of the load equivalent of sensor cable alarm voltage at alarm and the cold junction voltage regardless of cold junction temperature (within ±2°C from -55°C to +90°C). Around 0°C (32°F) cold junction compensation voltage, as well as cold junction voltage is zero, and bridge output voltage is then equal only to the loaded equivalent of sensor cable voltage at alarm.

3.3 Amplification and Relay Output

3.3.1. Input Amplifier Circuitry

In preceeding sections attention was drawn to the fact that sensor output was relatively close in magnitude to that of a constantan-iron thermocouple, the exception being that sensor junction impedance is a function of temperature. The resulting signal levels (both set point and alarm differential) are at least one to two orders of magnitude lower than those encountered in overheat and fire detection systems using thermistor type cables which are externally energized with currents of five to ten milliamps. Here a one ohm alarm differential (off to on) represents about 25 to 50 percent of the entire millivolt range of the thermocouple sensor. For this reason two stages of feedback-constrained amplification was deemed necessary.

Since examination of sensor cable performance, providing consistent alarm levels, was to be as accurate as

practical, the control unit would, in effect, serve the function of a reference detector having minimal error with ambient temperature, line voltage, and life. Also, for low-pass filter networks to be simple and small, amplifier input impedance would have to be high and input currents would have to be relatively low. The solution to this requirement was the use of a dual differential chopper-stabilized amplifier for the input stage (amplifier A100). The model selected, Burr-Brown Model 8406, was a hybrid assembly of integrated circuits, encapsulated to withstand rugged environmental requirements. Here unpredictable offset voltages due to variations in ambient temperature, line voltage, and life are limited to approximately ±80 microvolts, about +3°F for a constantan-iron thermocouple where the thermal voltage gradient is approximately -28 microvolts/°F. Even this small value merits attention for low alarm temperature levels, being about 3/4% of temperature or about 11% of the allowable 6% system error for a 450°F alarm level (refer to MIL-F-7872C for allowed system tolerance).

Input amplifier A100 is incorporated in a standard inverted amplifier type network having differential input from the constantan and iron wires emanating from the junction box. Closed loop voltage gain, being about 85, is determined primarily by feedback resistors R101, R102 and input resistors R106, R107, R108, and R109, because cable alarm impedance and bridge output impedance are relatively negligible.

As will be shown in the following section the input amplifier employed is prebiased "off" so that an input signal of approximately 170 microvolts has to be applied to amplifier A100 to bring output amplifier A101 into the zero volt level of its dynamic region of operation. At this point an additional input signal of 70 microvolts is required to cause relay actuation.

As in most applications of this kind, temperature differentials required for "on" to "off" control of the relay are maintained as small as practical to enhance system accuracy.

In this application about 4°F was selected as an acceptable spread. This magnitude denotes an input signal change of about 112 microvolts from the sensor cable and a corresponding change in the output voltage of A100 of about

9 millivolts, the loaded equivalent of 112 microvolts multiplied by a gain of 85. The reason for this prebiasing is to avoid spurious false alarm displays that could be generated by an amplifying system designed to operate closer to zero signal levels (80 microvolts, for example) when an open occurred in the input circuitry.

Because of a differential input sensing, input circuit parameters, and high amplifier DC common mode rejection, noise generated in the common line between junction loop and control power supply is markedly canceled in spite of variations in cable (source) impedance with temperature. For whole-length cable impedances of 1 megohm, 5,000 ohms (typically 200°F below alarm), and 100 ohms (alarm), DC common mode rejection from input circuit to output relay voltage is +55 DB, +62 DB, and +110 DB, respectively.

For the purpose of shielding against noise signals the input stage, from input circuitry to input amplifier output, is contained in a sectionalized metal enclosure. This enclosure has the capacity to house up to three input stages (for three alarm channels) and, consequently, is used in either the two channel or three channel control units required for this project. Screw type terminal boards, located on the top of the input enclosure provide both electrical access from the control unit signal connector to input circuitry and a convenient means of connection for assembly purposes.

3.3.2. Output Amplifier and Relay

In the preceeding section, it was shown that amplifier A100 would provide an output change of about 9 millivolts to A101 for an on-to-off control.

This magnitude of differential signal was large enough to consider the use of a standard monolithic integrated circuit amplifier for A101. Investigation revealed that the 709 type of operational amplifier having a noteworthy history of reliable performance and made by most I.C. manufacturers (Motorola Model #MC 1709 G, for example), would suffice.

Thermal variations in offset signal voltage of this device would be no more than 1 to 2 millivolts, presenting, therefore, a negligible shift in on-to-off control (approximately 1/2 to 1°F when referred to the input).

Amplifier A101 is connected to operate in a standard inverting amplifier mode. Here output voltage from input amplifier A100 is applied by way of coupling resistors R120 and R121 to the inverting input terminal, (2), of amplifier A101. The noninverting terminal of A101, (3), is referenced to power supply common by way of resistor R128. In addition, an "off" bias signal of approximately 15 millivolts is applied to terminal (3) by the resistive divider composed of resistor R128, and resistor R129 which is connected to the positive supply (B+).

The closed loop voltage gain of A101, determined in the main by feedback resistor R126 and input resistor R120 and R121, is about 1000. Resistors R123, R124, and variable resistor R122 provide a balancing adjustment which enables A101 to operate with minimal thermal drift in input offset voltage at alarm.

The load circuit was so designed to enable amplifier A101 to drive associated alarm relay K1 directly. Here, the relay circuit consists of a voltage level shifting circuit containing zener diode CR108 and resistor R131, an isolating diode CR109, a coil voltage spike suppressor CR110, a storage capacitor C117, resistor R130 and relay K1. The voltage level shifting circuit was used to enable A101 to completely deenergize relay K1. This circuit was required because K1, on occasion, would have a drop-out voltage at -55°C of about one volt. The guaranteed range of output voltage of A101, being ±12 volts would, otherwise, not be capable of resetting K1 from a ±15 volt supply.

The alarm relay K1 was selected on the basis of contact rating and pull-in power, 40 milliwatts, and for a coil resistor of about 10,000 ohms was readily actuated by A101. Resistor R130, in conjunction with capacitor C117 and the relay coil, provides an equivalent time constant of about .12 seconds against possible spurious voltage spikes which might register at the output of A101.

3.3.3. Alarm Channel Operation

In effect, signal voltage from center wire to sheath (negative) is applied in opposition to the preselected set point voltage, the resultant being detected by the amplifying system. At operational temperatures below alarm, sensor cable voltage and impedance provides signals insufficient for alarm.

Here the bridge output voltage predominates and by virtue of resistor R110 is applied in a direction opposite to that of alarm voltage to amplifier terminals (1) and (2) (positive). As a result, the alarm channel is continuously "off" biased.

When sensor cable alarm temperature is attained, signal voltage appearing across R110 now exceeds bridge output voltage and thus provides a resultant signal which actuates the alarm amplifier and its associated relay. From input to output, signal voltage, being negative from center wire to sheath, is inverted and amplified into a positive voltage by A100. In turn, this voltage is amplified and inverted into a negative going voltage at the output of A101, causing relay K1 to be actuated.

The contact configuration of K1 is double pole double throw. One set of contacts K1A, (K2A and K3A for zones 2 and 3 for example) provides actuation for its own overheat warning light. The second set of contacts K1B, is connected in "OR" logic fashion with contacts K2B and K3B (for zones 2 and 3) so as to provide common actuation of the master warning bell at alarm.

3.4 Master Warning Circuit

Master warning circuitry is relatively conventional in design, providing reset of the general alarm display (initiated by any one of the K-B contacts) by the momentary depression of an external push button. It consists of resistor R701, zener diode CR701, storage capacitor C701, relay K701 and isolating diode CR703.

Here the closure of any alarm relay B contact provides actuation of master warning. Momentary depression of the master warning button causes energization of master warning relay K701 which by way of its double throw contact, sequentially interrupts the "OR" circuit providing actuation of the master warning display and completes a return circuit for the master warning relay coil. In this way the master warning reset relay remains energized when the push button is released, reverting to its unenergized normal state only when the alarm subsides and the associated B relay contact is restored to its no-alarm open state.

Capacitor C701 is employed to keep relay K701 energized during momentary power interruption. Resistor R701 and zener diode CR701 protect the capacitor from excessive

DC voltage of prolonged duration.

3.5 Control Power

With the exception of the DC voltage required for test, fire, and master warning, power to the control unit is 115 VAC, 400 Hz as per MIL. STD. 704, condition B. With the exception of the bridge supplies, power to all control circuitry is provided by a dual voltage regulated supply (B+, B-, and common).

The positive voltage supply, (B+), for example, consists of step-down transformer T2, bridge rectifiers CR22 through CR25 inclusive, a transient suppression network consisting of R8 and CR26, filter capacitor C4, and a series regulator. The series regulator, in turn, consists of a referenced output voltage sensing amplifier Q1 which controls a two-transistor Darlington type amplifier, Q2 and Q3.

The reference voltage source, zener diode CR27 is energized in the main by the output voltage by way of resistor R15. Current flowing from the emitter of Q1 into CR27 has a minor effect on reference voltage magnitude. This source is placed at the emitter of Q1 so that the error or difference voltage between the zener reference and the load voltage sensing network (resistors R11, R14 and R16) is developed, amplified, and applied to the series amplifier Q2 and Q3 which in turn control the output voltage.

The negative half of the supply (B-) extending from T1 to resistors R20, R23 and R25 is identical to the positive half in both construction and operation. Here, the low output side of the positive supply is connected to the high input side of the negative supply, forming the junction for the common point for B+ and B-.

Power supply operation was fairly stable yielding a variation in output voltage of 1 to 2% for variations in line voltage and control unit ambient temperature. Here ripple voltage was in the order of 3 millivolts peak-to-peak.

As was mentioned previously, output voltage of the input stages was found to be sensitive to transient power interruptions. This was due to spurious saturation of integrating capacitors employed in the chopper stabilized amplifier assemblies when power to their circuitry was momentarily interrupted. A momentary clamping circuit consisting of transistor Q501 and Q502, diode CR501, capacitor C501, and resistors R501,

R502, R503, R504 and R505 was designed to overcome this problem. Responding only to transient variations in B+ and B- caused by line interruptions, the circuit momentarily clamps the outputs of all input stages by way of isolation diodes CR103, CR203, and CR303 for a period of about 3/4 seconds. In this manner spurious signals which would cause a false alarm are prevented from being transmitted to the output stage. Should this condition occur while any of the three channels is in the alarm state, the storage capacitors (C117, C217, C317) connected across the alarm relays maintain the associated relay in an alarm mode.

3.6 Setpoint Bridge Supply

An examination of the input stage will reveal that a power loss to the setpoint bridge circuit, appearing as an extreme drop in setpoint, will in most cases cause a false alarm. That is, under this fault condition the thermocouple cable needs only to provide a source sufficient to generate about 300 microvolts across resistor R110 to actuate the alarm channel, a cable signal strength available hundreds of degrees below alarm temperature. For this reason, and also, for purposes of signal circuit separation to permit complete independence of setpoint adjustment and complete isolation for common mode rejection, each bridge circuit was provided with its own supply.

The bridge supply for alarm channel 1, for example, consists of a step-down transformer T100, a full-wave bridge containing rectifiers CR1 to CR4, filter capacitor C1, a regulating stage consisting of resistor R1 and zener diodes CR5 and CR6, and output regulating stage consisting of resistor R2 and temperature compensated zener diode CR7. In the main, zener diodes CR5 and CR6 provide regulation against variations in line voltage. Zener diode CR7 provides additional regulation of the output across CR5 and CR6 but, more importantly, maintains a relatively constant output voltage to the bridge under variation in ambient temperature.

Typical variations in output voltage to the bridge for ±10% variations in line voltage and variations in operating temperature from 25°C to either -55°C or 90°C were found to be about ± .25%. For an alarm temperature of 450°F this variation would correspond to a shift in alarm temperature of about 1.1°F.

3.7 System Test

An investigative search was made to determine if a

positive functional test procedure could be developed which would insure that the sensor is capable of alarm generation when heated to alarm temperature and that the control unit would respond by actuating an alarm display. The latter requirement did not present a problem. Ensuring the thermal performance of the complete sensor, however, was found, from the point of view of heating hardware and its effect on cable response to a true overheat condition, to be insurmountable.

Consideration was given to heating a small length (4 inches) of cable with an electrically controlled jacket to generate an alarm. Even from an academic point of view, this approach is a contradiction in application providing only a "sectional" check on a long "continuous" sensor cable. In addition, as will be shown later in the section dealing with system performance, the difference in alarm temperature generated by a single break in a "thermoelectric" sensor loop (open loop vs. closed loop) is virtually indiscernible, being only a few degrees even for alarm sections three inches long.

A cable continuity check would, therefore, be necessary to ensure that an alarm signal reaching the control unit came from both ends of the sensor cable. A no-go on test could also imply the possibility of two opens in the sensor. Here the system would be blind to thermal conditions existing between the two breaks. The technique chosen for checking system integrity, consequently, was that of opening the loop at the control unit, impressing a signal to the free end of the loop and then observing the alarm display.

Test for all loops and alarm channels is implemented by pressing a common test button. Here DC voltage is applied to a test relay assigned to each zone detector. The test relay is a magnetically shielded hermetic reed relay with dry circuit type single pole double throw contacts which are electrostatically shielded from the coil circuitry. It is manufactured to meet the requirements of MIL-R-5757/73 so as to withstand the extreme environmental conditions found in aircraft applications.

For a given zone, zone 1 for example, the constantan loop is closed upon itself through the normally closed contacts of the test relay, K601, before being connected to the input circuitry. Here the normally open contact is connected to a voltage source similar in magnitude and polarity in relation to the sheath as the signal voltage generated by the

cable in an overheat condition. It consists of the voltage divider network containing resistors R601 and R604 which are connected between B- and common.

Upon the initiation of test, K601 becomes energized. In turn, one end of the loop is disconnected and transferred to the voltage source, causing actuation of the alarm channel by way of the entire sensor circuit. For an open in sensor loop circuitry or a short between center wire and sheath, test voltage would not be transmitted to the end of the loop still connected to the alarm channel input circuitry and, consequently, an alarm would not occur.

3.8 Calibration

Sensor-to-alarm channel calibration is accomplished by adjusting both the cold junction compensation network and the alarm setpoint network (refer to the input stage for zone 1 in Figure 7) Access for these adjustments (R103 and R112) is provided by two holes in the top of the input stage assembly. Here voltage is measured from TP1 and TP2 to the bottom of the bridge to establish the settings.

Since sensor junction impedance in conjunction with center wire to sheath loading (2,000 ohms) has a direct effect on the signal voltage applied, the Thevenin junction impedance at alarm has to be predetermined. Here the entire cable under examination is inserted in a thermal bath at alarm temperature where junction impedance is then determined by the half voltage method described in Section II.

In addition, the adjustments are a function of the voltage and temperature of the reference (cold) junction located at the input stage of its associated channel.

Manual determination of the voltage settings encompassing all of the variables described above was found to be both lengthy and time consuming. For convenience, a computer program was developed which provided a tabulation of these settings for any predetermined cold junction temperature and for the cable and alarm temperature under consideration (refer to Appendix II).

Final adjustment was made by measuring the ambient temperature of the cold junction in the energized control assembly (usually between 70°F and 90°F) and then, for the

temperature observed, referring to the computerized tabulation to obtain the voltage settings. These settings were then incorporated on the control unit.

V

EXAMINATION OF PERFORMANCE

1. THE SYSTEMS TESTED

A two zone system with alarm temperatures of 575°F and 765°F (system B) and a three zone system with alarm temperatures of 450°F, 675°F, and 850°F (system A) were fabricated and tested in accordance with the test procedure shown in Appendix V. As shown in Appendix V, all tests were passed without difficulty except the vibration test for the control unit which was completed satisfactorily after internal stiffening braces and vibration isolators for mounting of the control assembly were incorporated. In addition the clearance time test for the 450°F sensor-channel system exceeded the allowed time (30 seconds) by 1 to 2 seconds. This excess was due to the fact that the storage capacitors connected in parallel with the alarm relays (K1 to K3) imposed an additional channel reset time of 3 to 5 seconds. Since sensor cable clearance time was therefore lower by this amount, the 1 to 2 second system overrun was considered tolerable.

2. FUNCTIONAL TESTS

Those tests concerning the functional operation of the overheat detection system, such as the system integrity test, calibration, high and low temperature operation, etc., are now discussed in greater detail.

2.1 System Integrity Test (Refer to Appendix V, paragraph 6.1 of Performance Testing Report).

The system integrity test function was implemented where required as a means of checking system operation during or following environmental tests. In many instances the integrity test was also initiated throughout the majority of the test procedure to ensure that both the sensor and alarm channel under examination were operating properly. This technique was employed in particular during the calibration tests, the block tests, and the high and low temperature tests on the control unit. In all instances, the integrity test presented a correct display of system status.

2.2 Calibration (Refer to Appendix V Paragraph 6.3).

The sensor cables were placed in a calibrated bath with the balance of their system at room temperature. Bath temperature was gradually increased until the associated alarm channels were actuated.

In most cases, the alarm channels triggered within 5°F of specified temperature, the exception being for the 850°F sensor-channel system which alarmed at 830°F, being off by 20°F (about 2.35%).

2.3 Block Tests (Refer to Appendix V Paragraphs 6.4 and 6.5).

Block test data was taken both at room ambient conditions and elevated temperature conditions. In each group of tests, a 12 inch, 6 inch, and 3 inch section of each sensor cable was alternately placed in a heated block. Block temperature, monitored by a thermocouple pyrometer, was gradually increased until an alarm was generated by the control unit.

Data was obtained for closed loop and open loop performance (refer to Appendix V). Examination reveals that as the sensor alarm section was reduced from the entire length to 12 inches and then from 12 inches to 3 inches, the alarm temperature increased by 10 to 20% and then by an additional 10 to 14%.

A computer-aided analysis was made to determine if this was the performance to be expected, and, if it was, how it compared to the performance of a thermistor type cable-control system in which only resistance is sensed.

Two computer programs were made for this purpose (refer to Appendix III, Paragraph 1). The first program, supplied with alarm resistance and total cable length at alarm, established the coefficients for the resistance (ohm-feet) versus temperature characteristic of the cable, $R = (R_0)e^{B/T}$ (refer to Section II, Paragraph 4.1). The second program, making use of both this characteristic and also the equation for thermoelectric sensor voltage versus temperature (refer to Section II, Paragraph 4.2), establishes the new alarm temperatures corresponding to the alarm section lengths of 12, 6, and 3 inches. This process was repeated for a resistance sensing system (thermistor cable) and the results for both systems were then compared.

A correlation of test data and calculated alarm temperatures for the thermoelectric system operating in the open-loop mode (closed loop data was virtually equivalent) is shown in the following tabulations.

System A

Cable Type	450°F		675°F		850°F	
Section length (")	Data (°F)	Calc. (°F)	Data (°F)	Calc. (°F)	Data (°F)	Calc. (°F)
12	512	530	830	752	1063	961
6	541	558	891	785	1121	1007
3	559	590	903	823	1167	1060

System B

Cable Type	575°F		765°F	
Section length (")	Data (°F)	Calc. (°F)	Data (°F)	Calc. (°F)
12	707	679	840	910
6	768*	712	842*	957
3	778	751	951	1009

*incorrect data

With regard to both magnitude and range of temperature increase (12 inches to 3 inches), calculations tend to corroborate observed performance. Two values which show a marked disproportion in shift, the recorded temperatures for the 6 inch alarm sections of the 575°F and 765°F cables, represent an error in data. This can be verified by examining the closed loop data shown in Appendix V. The difference between calculated values and observed data is due in large part to inaccuracy in block temperature measurement, cable inhomogeneity, and the fact that calculations did not include end-effect loading on the sections being tested.

The calculated thermoelectric performance just shown is now compared to the performance of a thermistor type system. In the following tabulations shown below, the thermistor cable is assigned the same resistance versus temperature characteristic used for calculating thermoelectric performance.

Here cable resistance at the initial alarm temperature establishes the reference for thermistor operation

T_A = Initial zone sensor alarm temperature, in °F.

R_A = Self-generating sensor junction impedance and/or thermistor sensor resistance for the entire length of cable at alarm temperature T_A, in ohms.

L_A = Entire cable length at alarm temperature R_A, in feet.

L_O = The length between the control and the cable alarm section L operating in the open-loop mode, in feet.

Increase = Difference between new and initial alarm temperature, in °F.

Percent of R increase = The increase in alarm temperature required by the thermoelectric system expressed as a percentage of the increase required by the resistance sensing system.

L = Cable section lengths, in inches.

System A Temperatures (°F)

$T_A = 452$, $R_A = 118$, $L_A = 18$, $L_O = 14$

L (inches)	Self-generating Alarm (°F)	Self-generating Increase (°F)	Thermistor Alarm (°F)	Thermistor Increase (°F)	Percent of R increase (%)
12	530	78	652	200	39
6	558	106	710	258	41
3	590	138	776	324	42

$T_A = 676$, $R_A = 53$, $L_A = 16$, $L_O = 12$

L (inches)	Self-generating Alarm (°F)	Self-generating Increase (°F)	Thermistor Alarm (°F)	Thermistor Increase (°F)	Percent of R increase (%)
12	752	76	960	284	27
6	785	109	1045	369	29
3	823	147	1142	466	31

$T_A = 832$, $R_A = 128$, $L_A = 16$, $L_O = 22$ (includes inert extension cables).

L (inches)	Self-generating Alarm (°F)	Self-generating Increase (°F)	Thermistor Alarm (°F)	Thermistor Increase (°F)	Percent of R increase (%)
12	961	129	1146	314	41
6	1007	175	1243	411	42
3	1060	228	1352	520	43

System B Temperatures (°F)

$T_A = 573$, $R_A = 73.5$, $L_A = 32$, $L_O = 28$

L (inches)	Self-generating Alarm (°F)	Self-generating Increase (°F)	Thermistor Alarm (°F)	Thermistor Increase (°F)	Percent of R increase (%)
12	679	106	902	329	32
6	712	139	982	409	34
3	751	178	1073	500	35

$T_A = 765$, $R_A = 200$, $L_A = 18$, $L_O = 24$ (includes inert extension cables).

L (inches)	Self-generating Alarm (°F)	Self-generating Increase (°F)	Thermistor Alarm (°F)	Thermistor Increase (°F)	Percent of R increase (%)
12	910	144	1057	291	49
6	957	191	1144	378	50
3	1009	243	1242	476	51

The results of this section analysis indicate that the increase in alarm temperatures to be expected in these thermoelectric systems would be about 25 to 50% of the increase in alarm temperature of equivalent thermistor type systems operating only on sensor resistance.

It is important to note that this improvement in sensor discretency exists with a 2,000 ohm load on the thermocouple cable. The following tabulation reveals for the 575°F zone sensor system the effect of loading, indicating that thermoelectric sensor discretency would be expected to improve markedly as sensor loading becomes lighter.

As before, $T_A = 573$, $R_A = 73.5$, $L_A = 32$, and $L_O = 28$. But R_L, the loading resistor, is increased from its original 2000 ohm level.

$R_L = 2000$ ohms

L (inches)	Self-generating Alarm (°F)	Self-generating Increase (°F)	Thermistor Alarm (°F)	Thermistor Increase (°F)	Percent of R increase (%)
12	679	106	902	329	32
6	712	139	982	409	34
3	751	178	1073	500	35

$R_L = 20,000$ ohms

L (inches)	Self-generating Alarm (°F)	Self-generating Increase (°F)	Thermistor Alarm (°F)	Thermistor Increase (°F)	Percent of R increase (%)
12	605	32	902	329	9
6	623	50	982	409	12
3	646	73	1073	500	14

$R_L = 200,000$ ohms

L (inches)	Self-generating Alarm (°F)	Self-generating Increase (°F)	Thermistor Alarm (°F)	Thermistor Increase (°F)	Percent of R increase (%)
12	577	4	902	329	1
6	582	9	982	409	2
3	589	16	1073	500	3

2.4 Low and High Temperature Operation (Refer to Appendix V, Paragraphs 6.7 and 6.8).

The complete systems, A and B, were subjected to four hour storage tests at -54°C and at +71°C. At the conclusion of each storage test, the sensor cables and junction box were removed from storage but still linked, by way of the extension cables, to the control which was retained at storage temperature. The calibration test was now repeated. Here all channels alarmed within ±6% of their nominal alarm temperatures as shown in the following tabulation.

System A Alarm Temperatures

Channel	450°F	675°F	850°F
Room Temp. (Para. 6.3)	452	676	832
-54°C (Para. 6.7)	455	671	825
+71°C (Para. 6.8)	445	676	830

System B Alarm Temperatures

Channel	575°F	765°F
Room Temp. (Para. 6.3)	573	766
-54°C (Para. 6.7)	575	752
+71°C (Para. 6.8)	573	762

As can be seen from this data, drifts in alarm channel operation (all but one) ranged from 0 to 7°F, the exception being the 765°F channel which yielded a drift of -14°F when stored at -54°C (-1.8% of 765°F).

In spite of the fact that sensor junction impedances varied from 53 to 200 ohms, the resulting settings established for cold junction compensation were found to be reasonably accurate. The alarm channel drifts revealed above are due also to the temperature coefficients (+ and/or -) of the input amplifier offset voltage and the fixed and variable resistors employed in the bridge circuit.

VI

SENSOR SHORT-CIRCUIT ANALYSIS

1. APPROACH

As described previously, the continuous thermoelectric sensor cable is installed as a closed loop where both ends of the sensor are connected to the control unit.

The configurations which sensor center wire-to-sheath short circuit conditions can acquire are numerous. For this reason, attention will be given to what might be called a near-worst-case condition where one end of the loop is disconnected. The portion of the sensor providing detection will in all but one case be positioned near the open end of the loop while the remaining section, at normal ambient temperature will be located between the sensing portion and the control unit. For purposes of comparison a short in a heated section at the control end of the cable is also examined.

System performance will be examined under two short circuit conditions; one in the sensing portion, the other in the portion at normal ambient temperature. Here, the temperature increase above nominal alarm temperature required by the sensing portion to activate the control for various levels of center wire-to-sheath short circuit impedance are presented. Extension wiring, coupling sensor cable to control, is assumed to have negligible resistance (refer to Figure 17 in Appendix IV).

1.1 The Calibrated Sensor

The alarm signal generated at nominal alarm temperature is established by calibrating the entire length of cable at alarm temperature. Figure 8 shows the equivalent circuit of the entire sensor cable at alarm temperature T_A with alarm source (Thevenin) voltage E_{TH} and alarm junction impedance R_A supplying alarm signal voltage E_O across control unit input impedance R_L.

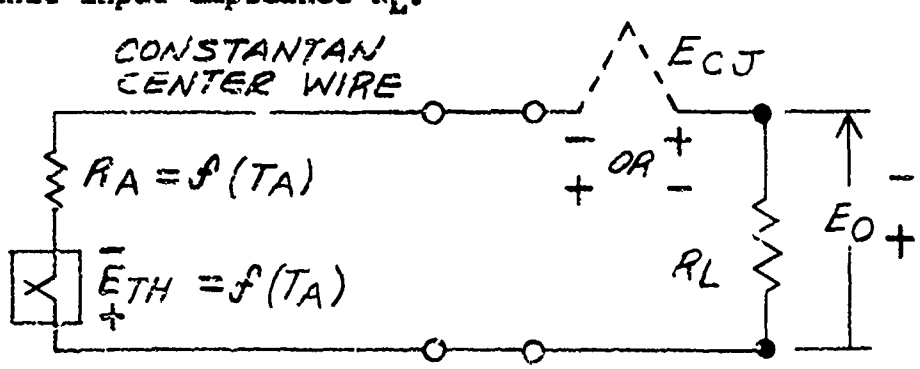

Figure 8. Thermoelectric Sensor at Nominal Alarm Temperature Generating Alarm Signal to Control Input Impedance R_L.

Here cold junction voltage E_{CJ} is shown as either opposing or aiding (as determined by control unit ambient temperature) cable voltage E_{TH}.

The equation relating E_0 to the cable is

$$E_0 = \frac{R_L}{R_A+R_L} (E_{TH} \pm E_{CJ}) \tag{4}$$

$$E_0 = \frac{R_L}{R_A+R_L} (E_{TH}) \pm \frac{R_L}{R_A+R_L} (E_{CJ}) \tag{5}$$

Since cold junction compensation is intended to balance out that portion of the equation involving E_{CJ}, only the term involving E_{TH} will be considered in the analysis, as shown in equation (6).

$$E_0 = \frac{R_L}{R_A+R_L} (E_{TH}) \tag{6}$$

Consider a sensor cable 20 feet long having an alarm temperature of 600°F, and a source impedance (obtained by the 1/2 voltage method described in Section II) of 100 ohms driving a load, R_L, of 2000 ohms. Employing voltage equation (3) in Section II, and equation (6), the alarm signal voltage E_0 for the entire cable is -16.337 millivolts. This is the alarm voltage which the sensor must provide at the control unit (across R_L) under any sensor short circuit condition if an alarm display is to be presented.

In addition, the 20 foot length, 100 ohms source impedance, and 600°F temperature form coordinates for a thermoelectric cable having a characteristic temperature of 543°F. This was determined by the computer program shown in Appendix III, Section 1. The impedance equation of this cable (refer to equation (1) in Section II) has coefficients with values of $R_0 = .20228 \times 10^{-3}$ ohm-feet and $B = 17057$.

2. A SHORT IN THE ALARM SECTION

Consider the sensor loop to be open with 1 foot of the cable at the open end providing signal, the remaining 19 feet at an ambient temperature of 400°F.

Under this condition, the thermoelectric sensor can be thought of as two parallel sections, each comprising a thermocouple with its own millivolt output and junction resistance. The output of this network feeding the input impedance of the control unit R_L is shown in Figure 9. Here again, the cold junction is shown, but not included in the analysis.

Center wire resistance, which for this open cable becomes noteworthy mostly in the unheated section, is assigned values of $R_{AC}=0$ and $R_{2C}=20$ ohms for sections L_1 and L_2, respectively.

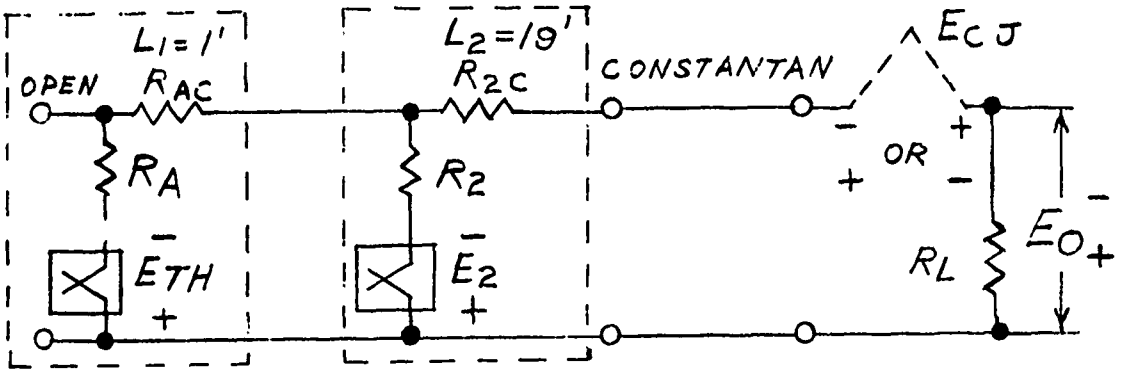

Figure 9. Thermoelectric Sensor Presented as Paralleled Sources Supplying Control Input Impedance R_L.

The equation relating output voltage E_0 to this cable network is

$$E_0 = \left(\frac{(R_A + R_{AC})\ (R_2)\ (R_L)}{(R_L+R_2+R_{2C})\ (R_A+R_{AC}) + R_2(R_L+R_{2C})}\right)\left(\frac{E_{TH}}{R_A+R_{AC}} + \frac{E_2}{R_2}\right) \quad (7)$$

for $R_{AC}=0$, and a short in the 1 foot long heated section, so that $R_A=$ zero ohms, reduces equation (7) to

$$E_0 = \frac{R_L}{(R_L+R_{2C})}\ (E_{TH}) \quad (8)$$

This result reveals that a zero ohm short in the heated section cancels out the effects of E_2 and R_2 because E_{TH}

dominates the configuration.

Sensor voltage, E_{TH}, required to generate E_O, becomes

$$E_{TH} = \frac{(R_L + R_{2C})}{R_L} (E_O) \qquad (9)$$

Substituting the values in equation (9) results in

$$E_{TH} = \frac{(2000 + 20)}{2000} (-16.337)$$

$$E_{TH} = -16.5 \text{ millivolts}$$

The cable temperature corresponding to this source voltage is about 578°F, a reduction of about 22°F or -3.7% from nominal alarm temperature.

2.1.1. A Short in a Heated Section at the Control End

It should be noted that if the heated 1 foot length of cable were located at the control with a short of zero ohms, a single section problem similar to that shown in Figure 8 would result, but with $R_A = 0$. Here E_{TH} would equal E_O, -16.337 millivolts.

The cable temperature corresponding to this source voltage is about 570°F, a reduction of 30°F or about 5% from nominal alarm temperature.

3. A SHORT IN THE UNHEATED SECTION

Consider the near-worst-case condition of the sensor cable to still consist of a 1 foot heated section and a 19 foot section at 400°F ambient but with a short at the control end, as shown in Figure 10. Again, nominal alarm temperature is 600°F.

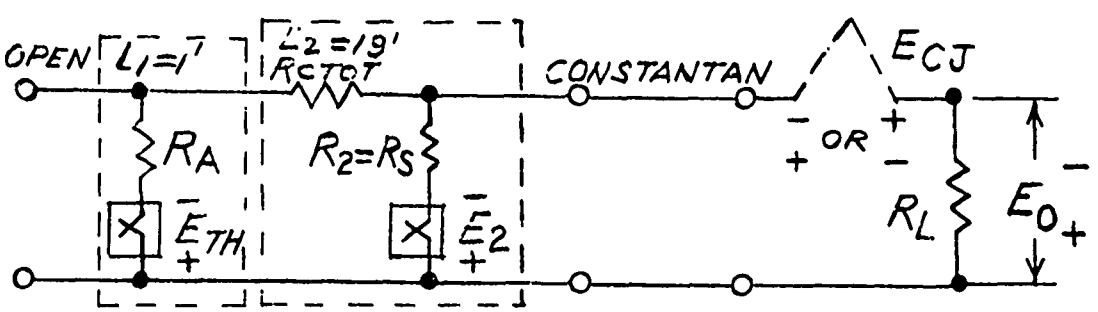

Figure 10. Open Thermoelectric Sensor With Short R_S at the Control End.

Here, the total center wire resistance of 20 ohms would place a limit on the minimum value of impedance exhibited by the 1 foot active section of cable as temperature increased.

The equation for E_0 of this system is

$$E_0 = \left(\frac{(R_A+R_{CTot})\ (R_S)\ (R_L)}{(R_A+R_{CTot})\ (R_S+R_L)+(R_S)\ (R_L)}\right)\left(\frac{E_{TH}}{(R_A+R_{CTot})} + \frac{E_2}{R_S}\right) \qquad (10)$$

and thus

$$E_{TH} = \left[(E_0)\ \left(\frac{(R_A+R_{CTot})\ (R_S+R_L)+(R_S)\ (R_L)}{(R_A+R_{CTot})\ (R_S)\ (R_L)}\right) - \frac{E_2}{R_S}\right]\ (R_A+R_{CTot}) \qquad (11)$$

By means of a computer-aided analysis shown in Appendix III, Section 2, the alarm temperature required in the 1 foot section to generate an alarm for a short resistance, R_S, of different magnitudes at the control end of the 19 foot section is shown in the following tabulation (nominal alarm temperature for 20' = 600°F).

Alarm Temperature for 1 Foot Section at Open End for Short, R_S, at Control End of Sensor Cable

R_S (ohms)	T Alarm (°F)	T increase (% of 600°F)
1000	727	21.2
100	828	38.0
50	881	46.8
20	977	62.8
10	1088	81.3
5	1288	113.0
1	2820	370.0

As shown in this tabulation, center wire-to-sheath short circuits at the control end of the 19 foot section at 400°F require disproportionately larger increases in alarm temperature as short circuit impedance approaches zero ohms. This is due mainly to the signal attenuating

action of short resistance R_S. In equation (10), it can be seen that as R_S approaches zero, E_0, in the limit, becomes equal to E_2, the voltage of the 19 foot section at 400°F.

VII

CONCLUSIONS AND RECOMMENDATIONS

1. CONCLUSIONS

1.1 The utilization of thermoelectric type continuous sensors for overheat detection systems appears to be quite practical.

1.2 Design techniques used to incorporate thermoelectric sensors in overheat detection systems can be implemented conveniently by considering the cable as a Thevenin signal source whose voltage and impedance (junction impedance) are a function of temperature.

1.3 Sensor Thevenin voltage appears fairly consistent in the cables made for this program. Voltage versus temperature characteristics were determined with reasonable accuracy by examining the zero impedance junction formed from center wire and sheath materials so constructed as to resemble the cable.

1.4 Sensor junction impedance versus temperature characteristics can be determined most accurately by means of the 1/2 voltage impedance measurement method, where sensor voltage itself is utilized.

1.5 Sensor voltage and junction impedance are sufficiently consistent to permit the effective design of cold junction compensated alarm setpoint circuitry. In this program, alarm setpoints could in most instances be preset within 10 degrees nominal (and in all cases no more than 2.35 percent) of the nominal alarm temperature. Here, the cold junction compensation used proved to be adequate under variations in control unit ambient temperature.

1.6 Actual Data on sectional sensitivity reveals that the overheat detection systems tested in this program (with a cable load of 2000 ohms) required an increase in alarm temperature ranging from 12 to 36 percent (minimum to maximum) for alarm sections of 12 to 3 inches, respectively. Analysis showing corresponding percent increases of 10 to 34 percent appears to corroborate this performance. If connector design against saline moisture contamination permitted cable loading to be decreased to 20,000 ohms, for example, analysis reveals

that now increases of 7 to 18% of nominal alarm temperature could be expected.

1.7 Analysis reveals that the thermoelectric type sensor is markedly superior over standard thermistor cables for sectional (12 to 3 inches) sensitivity to overheat conditions. With a cable load of about 2,000 ohms, the systems for this program require 27 to 50 percent of the increase in alarm temperature that systems with thermistor type cables would require. If cable loading was decreased to 20,000 ohms, analysis indicates that increases ranging from 6 to 20 percent could be expected.

1.8 From a practical standpoint, thermoelectric overheat detection systems can be designed to be relatively free from false alarms due to sensor shorts occurring between center wire and sheath. This performance is determined, in the main, by sensor junction impedance at alarm temperature, short circuit impedance, and center wire resistance. Analysis indicates that shorts occurring in the heated portion of a sensor tend to decrease alarm temperature. For a calibrated alarm resistance of 100 ohms and a short of zero ohms, the systems developed under this program would experience a drop in alarm temperature of no more than 5%. When only a section of cable containing the short is heated to generate an alarm, the drop in alarm temperature is now also a function of the center wire resistance of the remaining unheated portion of the cable. In many instances the drop in alarm temperature resulting from this short circuit system will be less than 5%. This small drop indicates that fewer sensor shorts will cause an alarm in a thermoelectric system than in a thermistor system.

1.9 Low impedance shorts between the center wire and sheath of unheated portions of sensor cable or between loop conductors extending sensor center wire and sheath into low temperature areas will require an increase in alarm temperature.

This increase may in some instances be so large as to render the system inoperative (refer to Section III, paragraph 3). Here as short resistance decreases to zero ohms, sensor output voltage is attenuated down to the non-alarm voltage level existing at the short circuit.

1.10 Because of thermocouple voltage versus alarm temperature uniqueness, different temperature zone loops cannot be connected in series or parallel to a common alarm channel without introducing excessive system error.

2. Recommendations

2.1 Further work in sensor connector design which would diminish the spurious noise signals generated by saline contamination is indicated. Any meaningful success which permits lighter sensor loading will markedly improve sensor discreteness and, therefore, system performance.

2.2 Production techniques for thermoelectric sensors do not appear any more involved than for thermistor type sensors, the exception being in establishing the voltage versus temperature characteristic of the materials used for center wire and sheath. Although this voltage-temperature gradient was established with sufficient accuracy for this program, a more comprehensive examination of sensor materials, to improve the definition and consistency of this voltage versus temperature gradient, is suggested. Standard iron-constantan thermocouple curves, for example, can be guaranteed to $\pm 5^{\circ}F$.

2.3 From the standpoints of system design and hardware procurement, it would seem wise to maintain the concept of using different connectors for signal transmissions and for control function in the control unit.

2.4 The employment of chopper-stabilized amplifiers, although justified for this project, needs to be reviewed. Here the utilization of low drift DC amplifiers of both monolithic and hybrid construction being developed presently should be examined for future input circuit design.

2.5 The existing control unit, designed as a reference detector for both two channel and three channel operation (up to and including the alarm relays), and having vibration isolators, is not representative of the control unit that would be made in large production volume for a specific application. It has been estimated that a three zone production unit containing similar componentry would have about 30% of the volume of the existing assembly being about 3 inches

high, 5 inches wide, and 6 inches long. A single zone production unit would be about 2 1/2 inches high, 3 inches wide, and 4 inches long. These dimensions do not include mounting brackets. Weights for the three zone and one zone production units would be about 4 pounds and 1 pound, respectively.

Since the system wiring-common needs to be located at the sensor junction box, and amplifier circuitry requires dual power (+ and -), signal circuit isolation from the available power lines is mandatory. Thus for applications where only DC power is available, DC to AC inversion is required to provide circuit isolation. This requirement should, however, have only a negligible effect on the dimensions recommended above.

2.6 As stated previously, low resistance shorts between center wire and sheath of unheated portions of the sensor loop would cause significant increases in alarm temperature. Although a manually operated test was deemed adequate for this program, the development of automatic self test circuitry which continually applies a periodic test is suggested. Here, care would have to be taken to distinguish between low cable resistance due to a short and low cable resistance due to sensor temperature approaching alarm. This could be accomplished by monitoring both center wire-to-sheath resistance and sensor output voltage. If, for example, center wire-to-sheath resistance was found to be low and sensor output voltage was found to still be of a value associated with ambient temperature (150 to 250°F below alarm) a cable fault display could be generated with a reasonable degree of certainty. The use of modern day integrated circuitry would make this approach quite feasible.

APPENDICES

APPENDIX I

ANALYSIS OF THERMOELECTRIC SENSOR OUTPUT VOLTAGE

1. BASIC THERMOCOUPLE

An equation to calculate the voltage gradients along a metal under a temperature difference ΔT is the following taken from "Handbook of Physics," Condon & Odishaw, equation 6.71, page 4-86, 2nd Edition, McGraw-Hill (1967).

$$-\frac{\partial \phi}{\partial x} = \rho j + \epsilon(T)\frac{\partial T}{\partial x} \tag{1}$$

where
- ϕ = potential (volts)
- x = distance
- ρ = resistivity of the metal
- j = current density
- T = temperature
- $\epsilon(T) = \frac{dEA(T)}{dT}$ = thermoelectric power; "(T)" signifies that ϵ is a function of temperature. $EA(T)$ is the absolute thermal e.m.f.

Equation (1) can be used where there are thermal gradients, and electric currents, and associated resistive voltage drops.

Figure 11 shows the circuit for a simple thermocouple carrying no current. The object is to calculate the thermoelectric output voltage across the cold junction terminals 1 and 3.

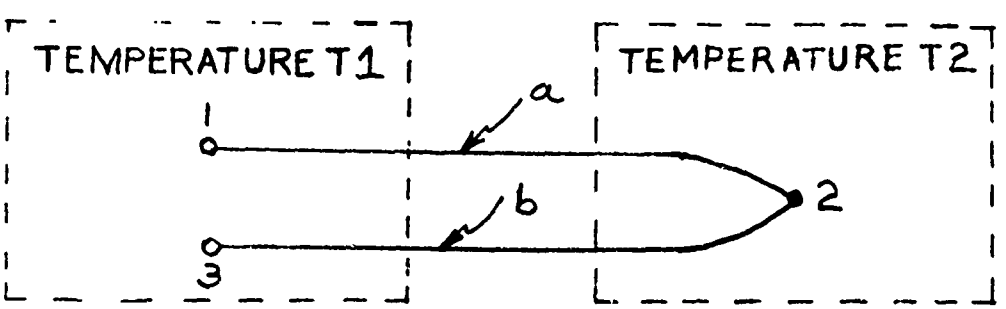

Figure 11. Circuit For A Simple Thermocouple Made From Metals a & b.

Assuming the current, j, to be zero, and using equation (1), the potential at point 1 is:

$$\phi_1 = \int_2^1 -\frac{\partial\phi}{\partial x}\,dx = \int_2^1 dEA = EA_{a\,1/2} \tag{2}$$

and similarly

$$\phi_3 = EA_{b\,3/2} \tag{3}$$

Here $EA_{a\,1/2}$ should be read: absolute thermal e.m.f. in metal a from temperature T1 at point 1 to temperature T2 at point 2.

Output voltage, V_{13} is the difference in absolute thermal e.m.f.'s going from T1 to T2:

$$V_{13} = \phi_1 - \phi_3 = EA_{a\,1/2} - EA_{b\,3/2} \tag{4}$$

Note that since any constant can be added to both $EA_{a\,1/2}$ and $EA_{b\,3/2}$ without changing the value of V, absolute values of thermal e.m.f. need not be used.

2. PARALLEL LOOP

Suppose terminals 1 and 3 are joined forming a loop as in Figure 12. This is the case when parallel conductors pass through a thermal gradient as with the inner and outer sheath of the thermoelectric cable.

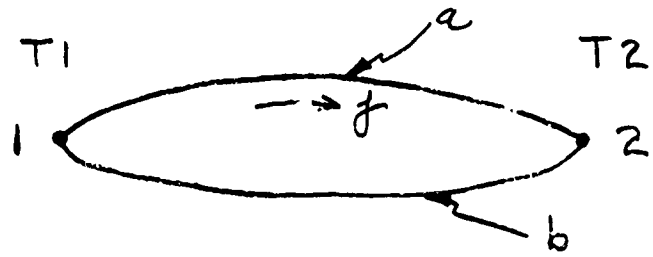

Figure 12. Closed Loop Of Dissimilar Metals Under A Thermal Gradient.

Using equation (1) and assuming a direction as shown for the loop current, two equations can be written for the potential at point 1 (T1) by starting at point 2 (T2) and integrating along conductors a and b:

$$\phi_1 = \int_2^1 d\phi_a = \int_2^1 (J\rho_a dx - dEA_a) \tag{5}$$

$$\phi_2 = \int_2^1 d\phi_b = \int_2^1 (J\rho_b dx - dEA_b) \tag{6}$$

The integral of $j\rho dx$ along a conductor from point 2 to point 1 is simply the IR voltage drop. Solving for the current, J, from equations (5) and (6),

$$J = \frac{EA_{a1/2} - EA_{b1/2}}{R_a + R_b} \tag{7}$$

The voltage change from point 2 (T2) to point 1 (T1) can then be calculated by substitution in equation (5).

$$\phi_1 = R_a\left(\frac{EA_{a1/2} - EA_{b1/2}}{R_a + R_b}\right) - EA_{a1/2} \tag{8}$$

where R_a = resistance of conductor a from point 2 to point 1 in ohms.

3. THERMOCOUPLE WITH ONE LEG A PARALLEL LOOP

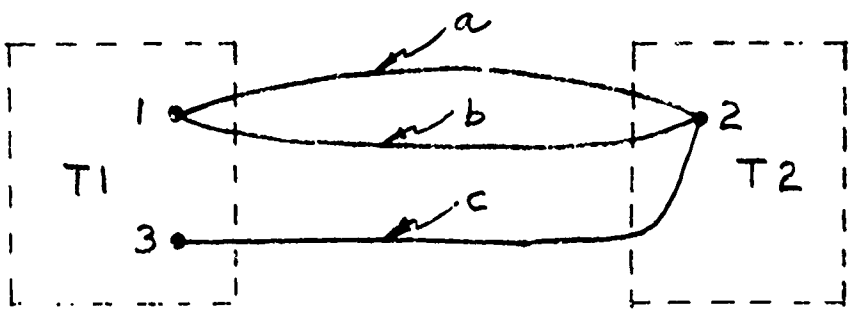

Figure 13. Simple Thermocouple Having A Parallel Dissimilar Metal Loop For One Leg.

The output voltage, V, at terminals 1 and 3 is, from equations (4) and (8):

$$V = \phi_1 - \phi_3 = \frac{R_a}{R_a + R_b}\left(E_{Aa\,1/2} - E_{Ab\,1/2}\right) - E_{Aa\,1/2} + E_{Ac\,1/2} \qquad (9)$$

If the metals a, b & c were iron, 446 SS and constantan, respectively, the output would be

$$V = \left(\frac{R_{IRON}}{R_{IRON} + R_{446SS}}\right)\left(E_{IRON/446SS\,1/2}\right) - E_{IRON/CONSTANTAN\,1/2} \qquad (10)$$

where, $E_{iron/446SS\ 1/2}$ = thermal e.m.f. of iron referenced to 446SS from temperature T1 to temperature T2.

Observing that $E_{CONSTANTAN/IRON} = -E_{IRON/CONSTANTAN}$

$$V = \left(\frac{R_{IRON}}{R_{IRON} + R_{446SS}}\right)\left(E_{IRON/446SS\,1/2}\right) + E_{CONSTANTAN/IRON\,1/2} \qquad (11)$$

The deviation from a constantan/iron thermocouple voltage characteristic can thus be realized by examining the first term in the above equation.

APPENDIX II

DETERMINATION OF VOLTAGE SETTINGS FOR ALARM SET POINT AND COLD JUNCTION COMPENSATION

1. APPROACH

Sensor-to-alarm channel calibration is accomplished by adjusting both the cold junction compensation network and the alarm setpoint network, variable resistors R103 and R112 in Figure 7. Here voltage is measured from TP1 and TP2 to the bottom of the bridge to establish settings.

Since sensor junction impedance in conjunction with center wire-to-sheath loading (2,000 ohms) has a direct effect on signal voltage, cable junction impedance at alarm has to be predetermined to make the settings.

In addition, the adjustments are a function of the voltage and temperature of the cold junction located at the input stage of the associated channel. For convenience the following computer program shown in Table II was developed. It provides a tabulation of these settings for any predetermined cold junction temperature and for the cable and alarm temperature under consideration.

Table II

"BASIC" PROGRAM FOR COLD JUNCTION AND ALARM SETPOINT SETTINGS

```
100 DIM A(101),B(101),C(101),D(101),E(101),F(101),I(101)
110 DIM M(101),P(101),R(101)
120 LET E1=6.2
130 LET R1=70000
140 LET R2=785
150 LET F7=30.515
160 LET C7=(1.0766237E+2)+(3.7904283E-1*F7)+(1.9045584E-4*F7↑2)
170 LET D7=(7.2849313E-7*F7↑3)-(1.4521706E-9*F7↑4)
180 LET R7=C7+D7
190 LET E7=1000*E1*((R2*R7)/(R2+R7))/(R1+(R2*R7)/(R2+R7))
200 LET L1=18
210 LET F1=450
220 LET R3=100
230 LET X1= 11.11
240 IF X1=11.11 THEN 270
250 LET E3=X1
260 GØ TØ 300
270 LET A3=(8.4496331E-1)-(2.7585907E-2*F1)
280 LET B3=-(3.3917856E-6*F1↑2)-(1.0470123E-9*F1↑3)
290 LET E3=A3+B3
300 LET E9= INT(1000*E3+.5)/1000
310 LET R4= INT(100*(L1*1.33*(1+.00004*(F1-80))/8)+.5)/100
320 PRINT
330 PRINT
340 LET K1=INT(10000*(2000/(R3+2000))+.5)/10000
350 PRINT "K1=";K1
360 PRINT
370 PRINT"EFDCI AT ";F1;" DEG. F= ";E9;" MIL-V"
375 LET G=0
380 LET K2=1.00
385 LET K3=1.00
390 LET E7=E7*K2
400 LET E8=INT(1000*E7+.5)/1000
410 IF K2=1.0000 THEN 440
420 PRINT"K2*ECØMP AT 30.515 DEG. F (TEMP FØR KECJ=0)= ";E8;" MIL-V"
430 GØ TØ 460
440 PRINT"ECØMP AT 30.515 DEG. F(TEMP FØR KECJ=0)=";  E8;" MIL-V"
450 GØ TØ 480
460 PRINT
470 PRINT"K2 IS NØW"; K3 ;" AND THE FØLLØWING TABULATIØN IS SØ"
475 PRINT"MØDIFIED."
480 PRINT
490 PRINT
500 LET A1=.27
510 PRINT" CJT ";"  RTD-7 ";"  KECJ  ";" ECØMPR ";"  ECØMP ";
520 PRINT"  ECØMP ";"   ESET ";"   ESET "
```

Continued on next page

Table II, continued

```
530 PRINT"                                    (ALARM)";"  (ADJ) ";
540 PRINT" (ALARM)";"  (ADJ) "
550 PRINT" (F) ";"  (ØHM) ";" (MIL-V)";" (MIL-V)";" (MIL-V)";
560 PRINT" (MIL-V)";" (MIL-V)";" (MIL-V)"
570 LET Z=1
580 LET J=0
590 FØR F=70 TØ 90 STEP 10
600 LET J=J+1
610 LET F(J)=F
620 LET A(J)=(8.4496331E-1)-(2.7585907E-2*F(J))
630 LET B(J)=-(3.3917856E-6*F(J)↑2)-(1.0470123E-9*F(J)↑3)
640 LET E(J)=(A(J)+B(J))*K1
650 LET E(J)=INT(1000*E(J)+.5)/1000
660 LET C(J)=(1.0766237E+2)+(3.7904283E-1*F(J))+(1.9045584E-4*F(J)↑2)
670 LET D(J)=(7.2849313E-7*F(J)↑3)-(1.4521706E-9*F(J)↑4)
680 LET R(J)=INT(100*(C(J)+D(J))+.5)/100
690 LET E(K)=1000*E1*((R2*R(J))/(R2+R(J)))/(R1+(R2*R(J))/(R2+R(J)))*K2
700 LET E(K)=INT(1000*E(K)+.5)/1000
710 LET E2=E8+ABS(K1*E9)-A1
720 LET E2=INT(1000*E2+.5)/1000
730 LET I(K)=(E2-E(K))/24298
740 LET E4=INT(1000*(E(K)+114*I(K))+.5)/1000
750 LET E5=INT(1000*(E2-35*I(K))+.5)/1000
760 LET N(K)=INT(1000*(E(K)-E8)+.5)/1000
763 LET E2=E2+N(K)-ABS(E(J))
765 LET E5=E5+N(K)-ABS(E(J))
770 PRINT USING 780,F(J),R(J),E(J),N(K),E(K),E4,E2,E5
780:###.# ####.##  ##.### ##.### ###.### ###.### ###.### ###.###
790 NEXT F
792 LET G=G+1
794 IF G=2 THEN 800
795 IF K3=1 THEN 800
796 LET K2=K3
798 GØ TØ 390
800 END
```

Here, the following information has to be supplied to the computer.

Line	Description
200	L1="Active" cable length in feet.
210	F1=Alarm Temperature
220	R3=Cable impedance at alarm.

The program already contains the equation for thermoelectric voltage (refer to Section II, equation (3)).

The following tabulation for a cold junction temperature range of 70°F to 90°F, in increments of 10°F, results when L1 is 18 feet, F1 is 450°F and R3 is 100 ohms.

K1= .9524

EFDCI AT 450 DEG. F= -12.255 MIL-V
ECØMP AT 30.515 DEG. F(TEMP FØR KECJ=0)= 9.167 MIL-V

CJT (F)	RTD-7 (ØHM)	KECJ (MIL-V)	ECØMPR (MIL-V)	ECØMP (ALARM) (MIL-V)	ECØMP (ADJ) (MIL-V)	ESET (ALARM) (MIL-V)	ESET (ADJ) (MIL-V)
70.0	135.34	-1.051	1.041	10.208	10.257	20.559	20.544
80.0	139.52	-1.318	1.308	10.475	10.522	20.559	20.544
90.0	143.75	-1.587	1.576	10.743	10.789	20.558	20.544

Here K1 is the loading factor caused by the alarm resistance of 100 ohms and a cable load of 2000 ohms (refer to Section VI, equation (5)), ECOMP is the voltage setting for cold junction compensation (TP2), and ESET is the voltage setting for alarm (TP1).

The subtitles (ALARM) and (ADJ) apply to the conditions where the sensor loop is connected or not connected, respectively, to the control unit during adjustment.

Final adjustment is made by measuring the ambient temperature of the cold junction in the energized control assembly and then, for the temperature observed, referring to the computerized tabulation to obtain the voltage setting.

APPENDIX III

COMPUTER-AIDED ANALYSIS OF SYSTEM PERFORMANCE

1. CABLE DISCRETENESS

1.1 Determination of Resistance Versus Temperature Characteristic of a Given Cable.

It is often necessary to determine the junction resistance versus temperature characteristic of a particular sensor cable in order to examine its resistance at temperatures other than specified. The following program shown in Table III determines this characteristic.

Table III
"FORTRAN" PROGRAM FOR R vs. T CABLE EQUATION

```
70 N=0
80 TA=500+459
90 RA=79.2
100 L1=10
110 L=100
120 RG=5000
130 R=RA*L1
140 TMIN=200+459
150 INIT: T=TMIN+L
170 B=2.1181484E+5-9.4961228E+2*T+1.7537538*T↑2-1.5685410E-3*T↑3
180 ++6.8796682E-7*T↑4-1.1834982E-10*T↑5
190 R0=RG/EXP(B/T)
200 RS=R0*EXP(B/TA)
210 IF(N-1)FST,SND,THD
220 FST: IF(R-RS)OK,OK,BK
230 SND: IF(RS-R)OK,OK,BK
240 THD: IF(R-RS)FIN,FIN,BK
250 BK: TMIN=T
260 GO TO INIT
270 OK: N=N+1
280 L=(-.1)*L
290 GO TO BK
300 FIN: PRINT,"TA AND R ARE COORDINATES FOR A POINT ON A"
320 PRINT 10,.1*(T-459),
330 10 FORMAT(F7.1)
340 PRINT," G THERMOCOUPLE CABLE RESISTANCE CURVE OF THE FORM"
350 PRINT,"R=R0*EXP(B/T)"
355 PRINT,"   WHERE...R0=",
360 PRINT 20,R0,
370 20 FORMAT(E11.5)
380 PRINT," OHM-FT."
390 PRINT,"    AND...B=",
400 PRINT 30,B
410 30 FORMAT(I6)
700 END
```

Here, the following information showing, for example, the temperature, resistance, and active length of a given cable at alarm, is provided.

Line	Description
80	TA = Temperature in ^{o}R (^{o}F + 460 to which a given length of cable (L1) has been exposed.
90	RA = Cable junction impedance at temperature TA, in ohms.
100	L1 = Heated length of cable, in feet.

For the values assigned to TA, RA, and L1, the computer searches through the dimension of characteristic temperature (the temperature at which cable resistivity 5,000 ohm-feet) to determine the characteristic temperature which provides a curve upon which TA - 460 (the given temperature in ^{o}F) and (RA)(L1), the corresponding cable resistivity at TA - 460 would establish a point. When the curve is found, the computer reveals the corresponding characteristic temperature and the coefficients RO and B for the curve's equation, $R = (RO)e^{B/T}$.

The following results are obtained for the program shown above where alarm temperature is 600°F, alarm resistance is 100 ohms, and cable length is 20 feet.

```
TA AND R ARE COORDINATES FOR A POINT ON A
   54.3 G THERMOCOUPLE CABLE RESISTANCE CURVE OF THE FORM
R=R0*EXP(B/T)
   WHERE...R0= .20228E-03 OHM-FT.
    AND...B= 17057
```

Here, the characteristic temperature was found to be 543°F.

1.2 A Comparison of Sectional Alarm Sensitivity Between Thermoelectric and Thermistor Systems

The operational configuration used to examine sectional sensitivity consists of an overheat detection system containing a sensor loop with one end disconnected from the control unit. Here, the sectional alarm sensitivity of the thermoelectric system is examined for alarm section lengths of 12 inches, 6 inches, and 3 inches, all of which are located a predetermined distance away from the control unit.

Prior to computation, the resistance versus temperature characteristic of the thermoelectric cable under consideration is first determined by means of the computer program shown in Table III of the previous subsection. Making use of this characteristic and also the equation for thermoelectric sensor voltage versus temperature (refer to equation (3) in Section II), the following computer program shown in Table III establishes the new alarm temperature corresponding to alarm sections of 12 inches, 6 inches, and 3 inches. This process is repeated for a resistance sensing system (thermistor cable) and the results for both systems are then compared. Here sensor resistance at the initial alarm temperature establishes the reference for thermistor operation.

The following cable information is required to run the program.

Line	Description
120	RA = Self-generating sensor junction impedance and/or thermistor sensor resistance for the entire length of cable at alarm temperature TA, in ohms.
140	RO = Sensor equation coefficient, in ohm-feet.
150	B = Thermistor "slope" of the cable's temperature-resistance characteristic in degrees Rankine.
160	L1 = The entire active length of the thermoelectric sensor at alarm temperature TF, in feet.
170	L3 = The length between the control and the alarm section L operating in the open-loop mode, in feet.
180	TF = Initial zone sensor alarm temperature, in ^{o}F.
200	TJ = Ambient temperature of the corresponding cold junction in the control unit.

Table IV

"FORTRAN" PROGRAM FOR SECTIONAL ALARM SENSITIVITY

```
100 DIMENSIØN LCR(101),RCR(101),TCR(101),T(101)
110 REAL LCR,L1,L3
120 RA=71.875
130 RL=2000
140 RØ=.18963E-3
150 B=16882
160 L1=32
170 L3=22
180 TF=575
190 TA=T+459
200 TJ=70
210 ETH=(8.4496331E-1)-2.7585907E-2*TF
220 +-(3.3917856E-6*TF↑2)-1.0470123E-9*TF↑3
230 ETR=(8.4496331E-1)-2.7585907E-2*TJ
240 +-(3.3917856E-6*TJ↑2)-1.0470123E-9*TJ↑3
250 ES=(ETH-ETR)*RL/(RL+RA)
260 PRINT,"FØR THERMØCØUPLE CABLE WITH..."
270 PRINT,"ALARM LENGTH=",L1,"FEET"
280 PRINT,"ALARM RESISTANCE=",RA,"ØHMS"
290 PRINT,"ALARM TEMPERATURE=",TF,"DEG. F"
300 PRINT,"THE ALARM SIGNAL VØLTAGE IS  ",
310 PRINT 10,ES,
320 10 FØRMAT(F9.3)
330 PRINT,"MILLIVØLTS"
340 PRINT
350 PRINT
355 K=3
360 DØ LSPAN, I=1,K
370 LCR(I)=1/2↑(I-1)
380 RCR(I)=(RA-1.0*L3)*LCR(I)
390 TCR(I)=-459+B/LØG(RCR(I)/RØ)
400 N=0
410 D=100
420 TMIN=200+459
430 INIT: TCI=TMIN+D
450 ECI=(8.4496331E-1)-2.7585907E-2*(TCI-459)
460 +-(3.3917856E-6*(TCI-459)↑2)-1.0470123E-9*(TCI-459)↑3
470 EØ=(ECI-ETR)*RL/(RL+1.3*L3+(RØ/LCR(I))*EXP(B/TCI))
480 IF(N-3)CØN,JMP,JMP
490 CØN: IF(N-1)FST,SND,THD
500 FST: IF(ABS(ES)-ABS(EØ))ØK,ØK,BK
510 SND: IF(ABS(EØ)-ABS(ES))ØK,ØK,BK
520 THD: IF(ABS(ES)-ABS(EØ))ØK,ØK,BK
530 JMP: IF(ABS(EØ)-ABS(ES))FIN,FIN,BK
540 BK: TMIN=TCI
550 GØ TØ INIT
560 ØK: N=N+1
```

Continued on next page

Table IV, continued

```
570 D=(-.1)*D
580 GØ TØ BK
590 FIN: T(I)=TCI-459
600 LSPAN:
610 PRINT," A CABLE ØPEN WITH", L3," FEET BETWEEN CØNTRØL UNIT"
620 PRINT,"AND ALARM SECTIØN L RESULTS IN THE FØLLØWING CØMPARISØN"
624 PRINT,"ØF THERMØCØUPLE AND RESISTØR CABLE ALARM TEMPERATURES."
630 PRINT
640 PRINT," L       THERM F     RESIS F     PERCENT"
650 PRINT,"(INCH) ALARM INCR  ALARM INCR  ØF RINCR"
660 PRINT 20,(LCR(I)*12,T(I),T(I)-TF,TCR(I),TCR(I)-TF,
670 +100*(T(I)-TF)/(TCR(I)-TF),I=1,K)
680 20 FØRMAT(I4,I7,I5,I7,I6,I7)
770 END
```

System A (KC-135)

450°F Sensor Cable

```
120 RA=118
140 RØ=.11014E-3
150 B=15286
160 L1=18
170 L3=14
180 TF=452
RUN
```

```
FØR THERMØCØUPLE CABLE WITH...
ALARM LENGTH=        18.00  FEET
ALARM RESISTANCE=      118.00  ØHMS
ALARM TEMPERATURE=      452.00  DEG. F
THE ALARM SIGNAL VØLTAGE IS     -10.68ØMILLIVØLTS
```

A CABLE ØPEN WITH 14.00 FEET BETWEEN CØNTRØL UNIT AND ALARM SECTIØN L RESULTS IN THE FØLLØWING CØMPARISØN ØF THERMØCØUPLE AND RESISTØR CABLE ALARM TEMPERATURES.

L	THERM F		RESIS F		PERCENT
(INCH)	ALARM	INCR	ALARM	INCR	ØF RINCR
12.	530	78	652	200	39
6	558	106	710	258	41
3	590	138	776	324	42

System A, continued

675°F Sensor Cable

```
120 RA=53
140 RØ=.21704E-3
150 B=17240
160 L1=16
170 L3=12
180 TF=676
RUN
```

```
FØR THERMØCØUPLE CABLE WITH...
ALARM LENGTH=        16.00  FEET
ALARM RESISTANCE=        53.00  ØHMS
ALARM TEMPERATURE=       676.00  DEG. F
THE ALARM SIGNAL VØLTAGE IS     -18.094MILLIVØLTS

   A CABLE ØPEN WITH        12.00    FEET BETWEEN CØNTRØL UNIT
AND ALARM SECTIØN L RESULTS IN THE FØLLØWING CØMPARISØN
ØF THERMØCØUPLE AND RESISTØR CABLE ALARM TEMPERATURES.
```

L	THERM F		RESIS F		PERCENT
(INCH)	ALARM	INCR	ALARM	INCR	ØF RINCR
12	752	76	960	284	27
6	785	109	1045	369	29
3	823	147	1142	466	31

850°F Sensor Cable

```
120 RA=128
140 RØ=.54693E-3
150 B=19544
160 L1=16
170 L3=22
180 TF=832
RUN
```

```
FØR THERMØCØUPLE CABLE WITH...
ALARM LENGTH=        16.00  FEET
ALARM RESISTANCE=      128.00  ØHMS
ALARM TEMPERATURE=     832.00  DEG. F
THE ALARM SIGNAL VØLTAGE IS     -22.513MILLIVØLTS
```

A CABLE ØPEN WITH 22.00 FEET BETWEEN CØNTRØL UNIT AND ALARM SECTIØN L RESULTS IN THE FØLLØWING CØMPARISØN ØF THERMØCØUPLE AND RESISTØR CABLE ALARM TEMPERATURES.

L	THERM F		RESIS F		PERCENT
(INCH)	ALARM	INCR	ALARM	INCR	ØF RINCR
12	961	129	1146	314	41
6	1007	175	1243	411	42
3	1060	228	1352	520	43

System B (Convair 880)

575°F Sensor Cable

```
120 RA=73.5
140 RØ=.18876E-3
150 B=16870
160 L1=32
170 L3=28
180 TF=573
RUN
```

```
FØR THERMØCØUPLE CABLE WITH...
ALARM LENGTH=        32.00  FEET
ALARM RESISTANCE=        73.50  ØHMS
ALARM TEMPERATURE=       573.00  DEG. F
THE ALARM SIGNAL VØLTAGE IS     -14.632MILLIVØLTS
```

A CABLE ØPEN WITH 28.00 FEET BETWEEN CØNTRØL UNIT AND ALARM SECTIØN L RESULTS IN THE FØLLØWING CØMPARISØN ØF THERMØCØUPLE AND RESISTØR CABLE ALARM TEMPERATURES.

L (INCH)	THERM F ALARM	THERM F INCR	RESIS F ALARM	RESIS F INCR	PERCENT ØF RINCR
12	679	106	902	329	32
6	712	139	982	409	34
3	751	178	1073	500	35

System B, continued

765°F Sensor Cable

```
120 RA=200
140 KØ=.51003E-3
150 B=19333
160 L1=18
170 L3=24
180 TF=766
RUN
```

```
FØR THERMØCØUPLE CABLE WITH...
ALARM LENGTH=        18.00  FEET
ALARM RESISTANCE=      200.00  ØHMS
ALARM TEMPERATURE=      766.00  DEG. F
THE ALARM SIGNAL VØLTAGE IS     -19.676MILLIVØLTS

   A CABLE ØPEN WITH       24.00    FEET BETWEEN CØNTRØL UNIT
AND ALARM SECTIØN L RESULTS IN THE FØLLØWING CØMPARISØN
ØF THERMØCØUPLE AND RESISTØR CABLE ALARM TEMPERATURES.
```

L (INCH)	THERM F ALARM	THERM F INCR	RESIS F ALARM	RESIS F INCR	PERCENT ØF RINCR
12	910	144	1057	291	49
6	957	191	1144	378	50
3	1009	243	1242	476	51

The following information presents an examination of sectional alarm sensitivity of the cables used in the qualification tests (refer to Appendix V).

Here THERM F = Thermoelectric sensor temperatures in ^{o}F.

RESIS F = Thermistor sensor temperature in ^{o}F.

ALARM = Sectional Alarm Temperature.

INCR = Difference between new and initial alarm temperatures.

PERCENT OF R INCR = The increase in alarm temperature required by the thermoelectric system expressed as a percentage of the increase required by the resistance sensing system.

1.2.1. The Effect of Cable Loading On The Sectional Alarm Sensitivity of The Thermoelectric System

If cable loading resistor RL (2000 ohms) were increased alarm sensitivity would be markedly improved. The following information, for example, indicates what the performance of the 575°F cable (TF=573°F) would be if the associated channel was designed for RL=20,000 and 200,000 ohms.

Sectional Alarm Sensitivity Versus Cable Load
(575°F Sensor Cable - For Example)

```
130 RL=20000
RUN


FØR THERMØCØUPLE CABLE WITH...
ALARM LENGTH=        32.00  FEET
ALARM RESISTANCE=        73.50  ØHMS
ALARM TEMPERATURE=       573.00  DEG. F
THE ALARM SIGNAL VØLTAGE IS     -15.114MILLIVØLTS


   A CABLE ØPEN WITH        28.00    FEET BETWEEN CØNTRØL UNIT
AND ALARM SECTIØN L RESULTS IN THE FØLLØWING CØMPARISØN
ØF THERMØCØUPLE AND RESISTØR CABLE ALARM TEMPERATURES.

  L       THERM F     RESIS F     PERCENT
(INCH) ALARM INCR   ALARM INCR   ØF RINCR
  12     605   32     902   329       9
   6     623   50     982   409      12
   3     646   73    1073   500      14


130 RL=200000
RUN


FØR THERMØCØUPLE CABLE WITH...
ALARM LENGTH=        32.00  FEET
ALARM RESISTANCE=        73.50  ØHMS
ALARM TEMPERATURE=       573.00  DEG. F
THE ALARM SIGNAL VØLTAGE IS     -15.164MILLIVØLTS


   A CABLE ØPEN WITH        28.00    FEET BETWEEN CØNTRØL UNIT
AND ALARM SECTIØN L RESULTS IN THE FØLLØWING CØMPARISØN
ØF THERMØCØUPLE AND RESISTØR CABLE ALARM TEMPERATURES.

  L       THERM F     RESIS F     PERCENT
(INCH) ALARM INCR   ALARM INCR   ØF RINCR
  12     577    4     902   329       1
   6     582    9     982   409       2
   3     589   16    1073   500       3
```

2. SENSOR SHORT CIRCUIT PERFORMANCE

Consider a thermoelectric overheat detection system with a sensor cable 20 feet long having a nominal alarm temperature of 600°F, and a source impedance of 100 ohms driving a load, RL, of 2000 ohms. Employing voltage equation (3) in Section II, and equation (6) in Section VI, the alarm signal voltage EO for the entire cable is -16.337 millivolts. This is the alarm voltage which the sensor must establish across RL under any sensor short circuit condition if an alarm display is to be provided.

Consider also the sensor loop to be open with a 1 foot alarm section at the open end and a low impedance short from center wire to sheath at the input end. The ambient temperature of the 19 feet of inactive cable is 400°F (refer to Figure 10, Section VI).

By means of the computer program shown in Table V, the alarm temperature required in the 1 foot section to generate an alarm is determined for a short resistance, RS, at the load end of the 19 foot section.

As in the computer program shown in Table IV, the resistance versus temperature characteristic of the cable together with the equation for thermoelectric sensor voltage (refer to equation (3) in Section II) is used to establish the alarm temperature of the 1 foot alarm section. Here, center wire resistance between alarm section and short is also taken into consideration. Extension wiring connecting the sensor cable to the input load RL is assumed to have negligible resistance in comparison to RL.

The following information is required to run the program

Line	Description
115	RS = Short resistance in ohms.
120	RA = Self-generating sensor junction impedance for the entire length of cable at alarm temperature TA.

Line	Description
130	RL = Input Load Impedance.
140	RO = Sensor equation coefficient, in ohm-feet.
150	B = The thermistor "slope" of the cable's temperature-resistance curve in degrees Rankine.
160	L1 = Total cable length.
170	L3 = Alarm section length, in feet.
180	TF = Initial zone sensor alarm temperature, in ^{o}F.
200	TAM = Ambient temperature of cable portion containing the short.

Table V

"FORTRAN" PROGRAM FOR SENSOR SHORT CIRCUIT ANALYSIS

```
110 REAL L1,L3,LT
115 RS=70
120 RA=100
130 RL=2000
140 R0=.20228E-3
150 B=17057
160 L1=20
170 L3=1
180 TF=600
200 TAM=400
210 ETH=(8.4496331E-1)-2.7585907E-2*TF
220 +-(3.3917856E-6*TF↑2)-1.0470123E-9*TF↑3
230 E2=(8.4496331E-1)-2.7585907E-2*TAM
240 +-(3.3917856E-6*TAM↑2)-1.0470123E-9*TAM↑3
250 ES=ETH*RL/(RL+RA)
260 PRINT,"FØR THERMØCØUPLE CABLE WITH..."
270 PRINT,"ALARM LENGTH=",L1,"FEET"
280 PRINT,"ALARM RESISTANCE=",RA,"ØHMS"
290 PRINT,"ALARM TEMPERATURE=",TF,"DEG. F"
300 PRINT,"THE ALARM SIGNAL VØLTAGE IS  ",
310 PRINT 10,ES,
320 10 FØRMAT(F9.3)
330 PRINT,"MILLIVØLTS"
340 PRINT
350 PRINT
360 PRINT,"CABLE SØURCE VØLTAGE AT AN AMBIENT TEMPERATURE"
370 PRINT,"ØF",TAM,"DEG. F. IS",
380 PRINT 20,E2,
390 20 FØRMAT(F9.3)
395 PRINT,"MILLIVØLTS"
397 PRINT
398 PRINT
400 N=0
410 D=100
420 TMIN=200+459
430 INIT: TCI=TMIN+D
450 ECI=(8.4496331E-1)-2.7585907E-2*(TCI-459)
460 +-(3.3917856E-6*(TCI-459)↑2)-1.0470123E-9*(TCI-459)↑3
465 R1=(R0/L3)*EXP(B/TCI)
467 R1=R1+20
470 E0=((ECI/R1)+(E2/RS))
475 +*(R1*RS*RL)/(R1*RS+R1*RL+RS*RL)
480 IF(N-3)CØN,JMP,JMP
490 CØN: IF(N-1)FST,SND,THD
500 FST: IF(ABS(ES)-ABS(E0))ØK,ØK,BK
510 SND: IF(ABS(E0)-ABS(ES))ØK,ØK,BK
```

Continued on next page

Table V, continued

```
520 THD: IF(ABS(ES)-ABS(E0))0K,0K,BK
530 JMP: IF(ABS(E0)-ABS(ES))FIN,FIN,BK
540 BK: TMIN=TCI
550 G0 T0 INIT
560 0K: N=N+1
570 D=(-.1)*D
580 G0 T0 BK
590 FIN: T=TCI-459
600 LT=L1-L3
700 PRINT,"A CABLE-SH0RT 0F",RS,"0HMS IN A",LT,"F00T"
710 PRINT,"SECTI0N AT",TAM,"DEG. F. WILL REQUIRE AN ALARM"
720 PRINT,"TEMPERATURE IN THE REMAINING",L3,"F00T SECTI0N"
730 PRINT,"0F",
740 PRINT 30,T,
750 30 F0RMAT(I6)
760 PRINT,"  DEG. F."
970 END
```

A short impedance of RS = 100 ohms results in the following computer output.

```
115 RS=100
RUN


FØR THERMØCØUPLE CABLE WITH...
ALARM LENGTH=        20.00  FEET
ALARM RESISTANCE=      100.00  ØHMS
ALARM TEMPERATURE=      600.00  DEG. F
THE ALARM SIGNAL VØLTAGE IS     -16.337MILLIVØLTS

CABLE SØURCE VØLTAGE AT AN AMBIENT TEMPERATURE
ØF      400.00  DEG. F. IS  -10.799MILLIVØLTS

A CABLE-SHØRT ØF      100.00  ØHMS IN A       19.00  FØØT
SECTIØN AT      400.00  DEG. F. WILL REQUIRE AN ALARM
TEMPERATURE IN THE REMAINING        1.00  FØØT SECTIØN
ØF   828  DEG. F.
```

The following tabulation shows the computed alarm temperatures resulting as RS is varied from 1000 ohms to 1 ohm.

RS (ohms)	T Alarm (°F)	T increase (% of 600°F)
1000	727	21.2
100	828	38.0
50	881	46.8
20	977	62.8
10	1088	81.3
5	1288	113.0
1	2820	370.0

APPENDIX IV

EDISON SELF-GENERATING OVERHEAT DETECTION SYSTEM

INSTALLATION INSTRUCTIONS

1. INTRODUCTION

This Appendix is intended to be a source of information to assist personnel in formulating initial installations of the Edison Self-Generating Overheat Detection System on high performance military aircraft. Some of the information is aimed at supporting the installation of this system in engine nacelle areas of KC-135 and Convair 880 aircraft.

2. COMPONENTRY

2.1 Detector Cable Assemblies

The cable assemblies are similar in configuration to Edison Model 244 types but different in material and operation, providing thermocouple-type signal output. Part numbering has, therefore, been modified to avoid confusion in the field. A list of the types of cables made for this program, for example, is tabulated below.

(KC-135 group)

Part Number	Cable Description		
	Alarm Temp. (°F)	Length (ft.)	Connectors
908480-21611	450	18	Male-Male
908480-19231	675	16	Male-Male
908480-19251	850	16	Male-Male
908490-07211 (two are used)	INERT	6	Female-Male

(Convair 880 group)

Part Number	Cable Description		
	Alarm Temp. (°F)	Length (ft.)	Connectors
908480-19211	575	16	Male-Male
908490-19211	575	16	Female-Male
908480-21641	765	18	Male-Male
908490-07211 (two are used)	INERT	6	Female-Male

Part number coding is explained in Figures 14 and 15.

2.2 Junction Box

The junction box is an adapter which electrically couples the sensor cables to fire-zone type thermocouple extension wires.

The box is so designed that it can be electrically bonded to an aircraft ground plane and therefore be used as a common point for the entire detection system. Here, six modified Edison type sensor cable female receptacles providing electrical entry sufficient for three sensor loops (three zones) are mounted on one side, and, by internal wiring, are connected to corresponding pins of an engine compartment type receptacle located on the opposite side. The box, itself, is a passivated stainless steel, gasket-sealed assembly, made rugged in construction to withstand the extreme environmental conditions encountered in aircraft engine areas (refer to Figure 16

2.3 Thermocouple Extension Wire Assembly

The extension wire assembly consists, in the main, of two twisted pairs of insulated constantan and iron wire surrounded by a shield and an insulated common wire.

The wiring is so arranged as to provide the necessary extension of one zone-loop back to the corresponding alarm channel in the control unit. Conductors and insulation are fabricated in the form of high-temperature firezone wire, meeting the requirements of MIL-W-25038A(USAF). Refer to Figure 17.

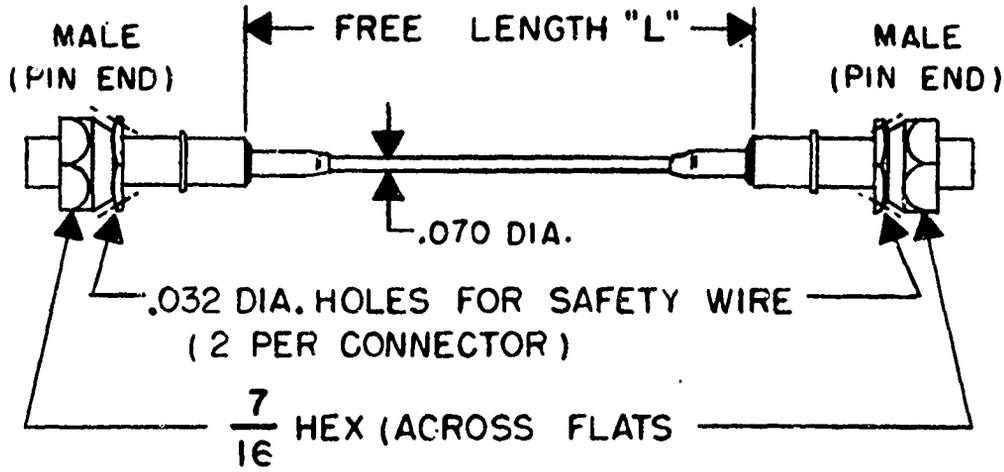

NOTES:

1-EXAMPLE OF PART NO. CODING ON ONE NUT

908480-08031

- 1 — CABLE SERIES
- 3 — TEMPERATURE CHARACTERISTIC (SEE TABLE I) ALARM TEMP. (°F) FOR 50 FEET AT 100 OHMS RESISTANCE.
- 08 — LENGTH "L" IN INCHES, $+\frac{1}{2}-0$
- 908480 — MODEL NO.

TABLE I	
NUMBER	ALARM TEMP.
1	450
2	575
3	675
4	765
5	850

2-MINIMUM RECOMMENDED BEND RADIUS = $\frac{1}{2}$"

3-END CAPS (2) P/N 14404-1

FIGURE 14. SELF-GENERATING CABLE DETECTOR ASSY. MODEL NO. 908480

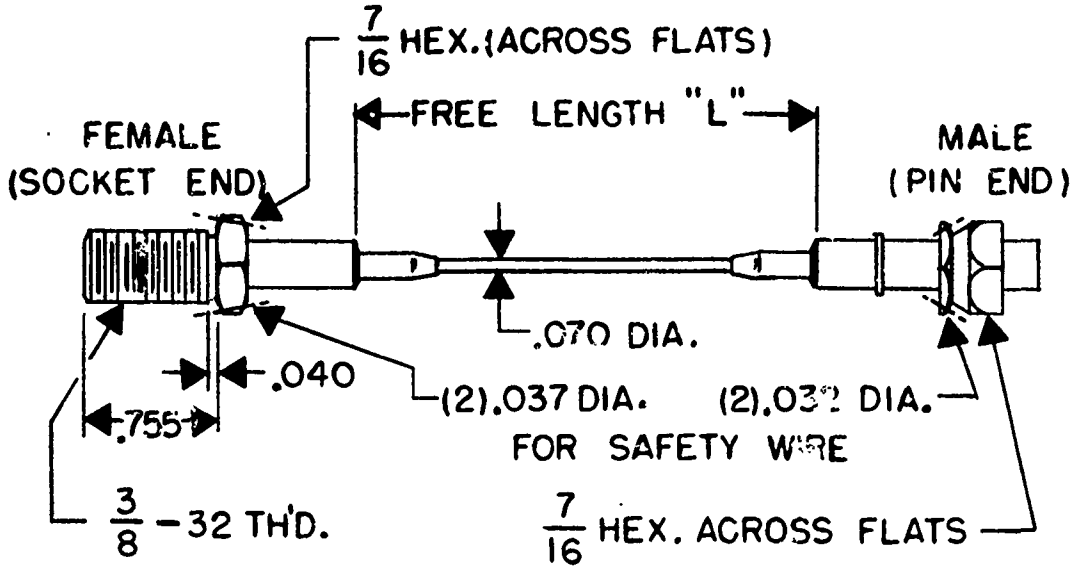

NOTES:

1-EXAMPLE OF PART NO. CODING ON FEMALE HEX.

908490-080 1 1

- 1 — CABLE SERIES
- 1 — TEMPERATURE CHARACTERISTIC (SEE TABLE I) ALARM TEMP. (°F) FOR 50 FEET AT 100 OHMS RESISTANCE.
- 080 — LENGTH "L" IN INCHES, $+\frac{1}{2}-0$
- 908490 — MODEL NO.

TABLE I	
NUMBER	ALARM TEMP.
1	575
2	INERT

2-MINIMUM RECOMMENDED BEND RADIUS = $\frac{1}{2}$".

3-END CAPS: FEMALE - P/N 14404-2
MALE - P/N 14404-1

4-CABLES WILL MATE END TO END.

FIGURE 15. SELF-GENERATING CABLE DETECTOR ASSY. MODEL NO. 908490

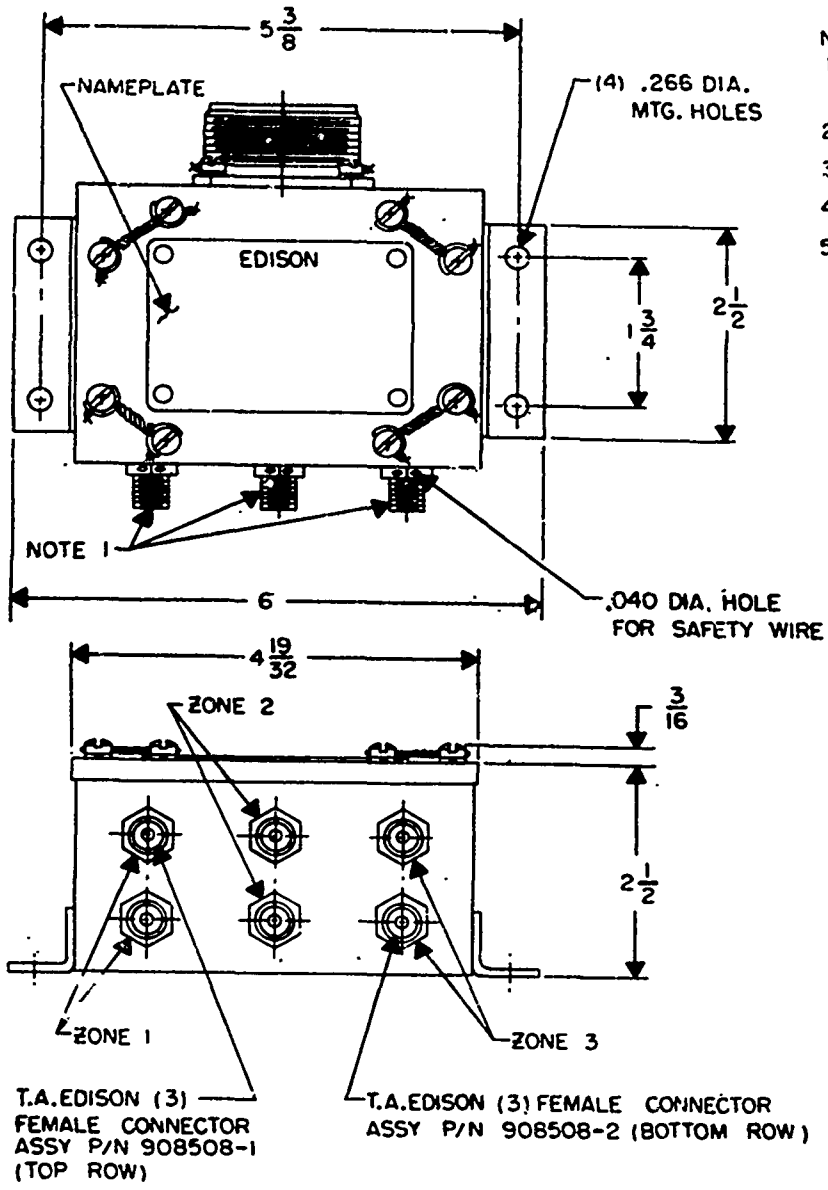

NOTES:

1- MAXIMUM TORQUE APPLIED TO FIRE DETECTOR CONNECTORS: 35 INCH-POUNDS

2- OPERATING TEMPERATURE RANGE: -65°F TO 350°F

3- BOX MATERIAL: PASSIVATED STAINLESS STEEL

4- WEIGHT: 2.5 POUNDS MAX.

5- ZONE DESIGNATION:

	1	2	3
KC-135	450°F	675°F	850°F
CONVAIR 880	—	575°F	765°F

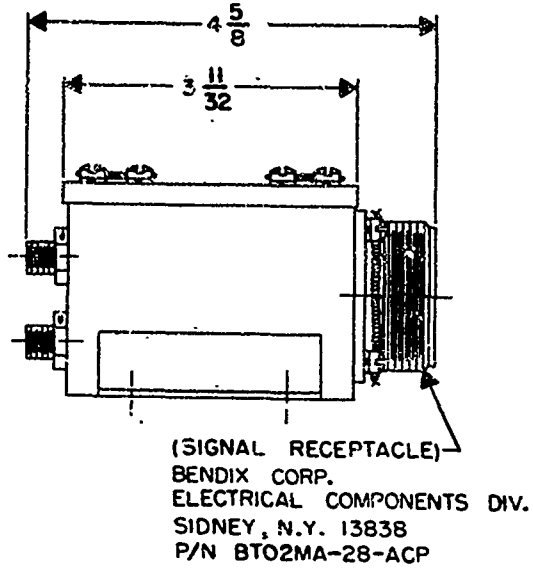

FIGURE 16. JUNCTION BOX ASSEMBLY

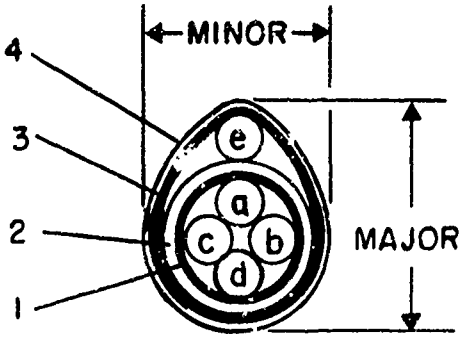

Component Details

a + b = Twisted pair approx. 3.5" LH lay
  a = #20 7/.0126 constantan conductor
    Firezone 101 insulation system (white braid with one red tracer in braid) NOM.O.D. = .115"
  b = #20 7/.0126 iron conductor
    Firezone 101 insulation system (white braid with one blue tracer in braid) NOM.O.D. = .115"
c + d = Twisted pair approx. 3.5" LH lay
  Same as a & b above, respectively. See note 2.
Cable Pairs (a & b) & (c & d) together approx. 3.5" LH lay.
1 - Barrier tape - glass-reinforced Teflon
2 - Basket woven shield - #36 single ends of nickel-clad copper, woven to minimum shield coverage of 85%
e = Single conductor firezone 101 - parallel to core (no spiral)
  #20 19/.008" nickel-clad copper
  Firezone 101 insulation system (white braid)
3 - Barrier tape - glass-reinforced Teflon.
4 - Teflon-coated glass braid coated with Teflon finisher.
  NOM Major O.D. = .450" NOM Minor O.D. = .335"
  MAX Major O.D. = .475" MAX Minor O.D. = .350"

Recommended Source
Cerro Wire & Cable Co.
Div. of Cerro Corp.
550 Nicoll St.
New Haven, Conn. 06504

Notes:
1 - Cable manufactured to meet MIL-W-25038
2 - Color code for c & d:
  For c (second constantan): white braid with red criss-cross tracer.
  For d (second iron): white braid with blue criss-cross tracer.

Figure 17. Firezone Type Thermocouple Extension Cable.

The wiring assemblies in zone-multiples of two (Convair 880) or three (KC-135) are terminated at each end as a group into MIL-C-5015D type cable plugs, T.A. Edison part numbers 908405 and 908419, mating with the junction box and control assembly, respectively. Refer to Figure 18.

2.4 Control Assembly

The control unit, T.A. Edison P/N 908579 (-2 for Convair 880 and -3 for KC-135) is an aluminum gasket sealed assembly which houses the alarm channel circuitry for each zone. This assembly requires 115 VAC, 400 Hz power for the detector circuitry and 28 VDC power for the alarm and test circuits, a test relay being an integral part of each channel. Electrical entry of the sensor loop circuits is provided by way of a MIL-C-5015D pin-type receptacle. Connections for electrical power, master and overheat warning, and test actuation are provided by way of a jam-nut receptacle which meets MIL-C-26482.

The entire assembly is mounted on four general purpose type vibration isolators providing isolation against not only vibration but also high shock (refer to Figure A4-6).

2.5 Warning Devices

2.5.1 Panel lights such as a single lamp press-to-test assembly no. AN3175-6, for example, may be used.

2.5.2 Bells or other warning devices may be used for Master Warning within the current limitation of the control assembly.

2.5.3 Test switches, such as an AN 3022-8 single pole, single throw momentary contact switch, for example, may be used to activate the test relay circuitry.

2.6 Sensor Cable Installation Devices

Cable clamps, T.A. Edison No. 15326, offer the most convenient method of mounting the sensor cables. Clips for the support of an entire cable installation may be attached to structural members along the designated routing. Here, the cable, equipped with T.A. Edison No. 15383-2 grommets can now be inserted into the clamps with ease.

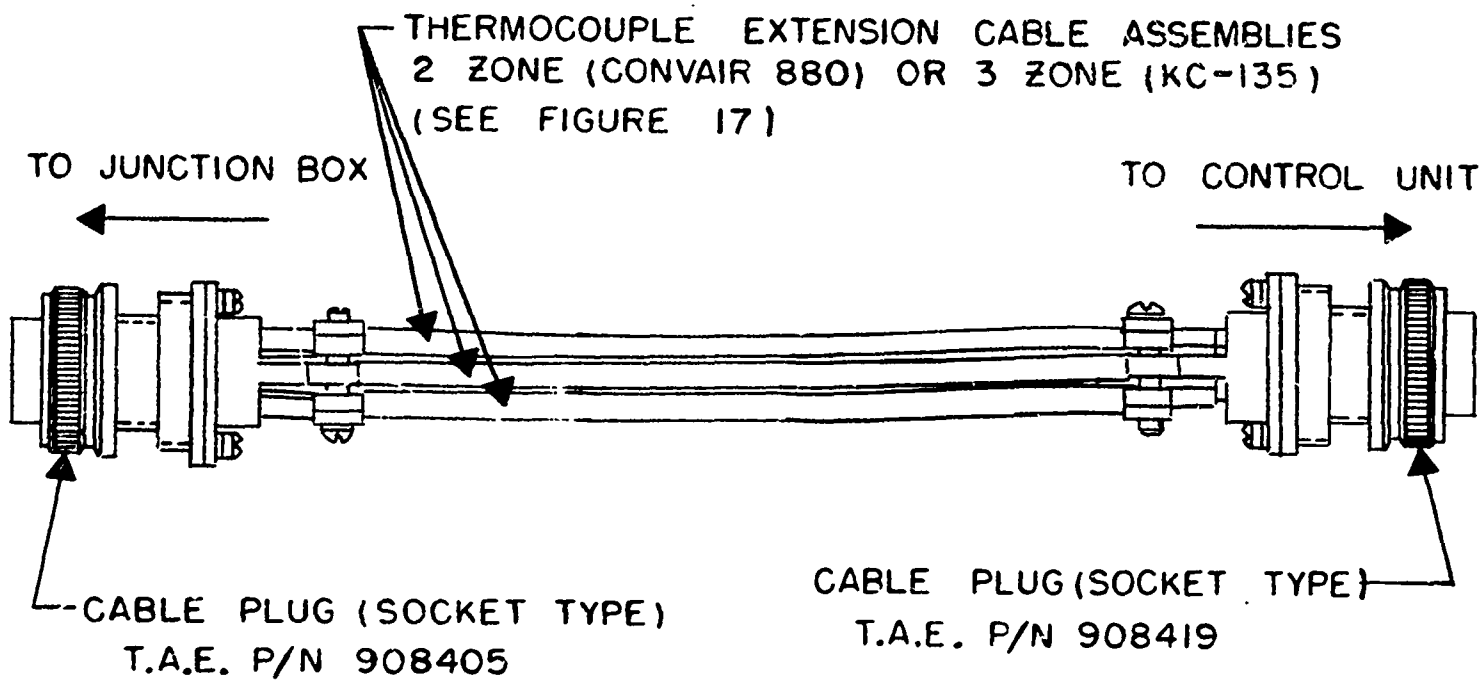

FIGURE 18. JUNCTION BOX — TO — CONTROL UNIT THERMOCOUPLE EXTENSION CABLE ASSEMBLY

NOTES:

1- OPERATING TEMP. RANGE: -65°F TO 160°F.
2- STORAGE TEMP. RANGE: -65°F TO 195°F.
3- WEIGHT: 10.5 POUNDS MAX.
4 DESIGNATION:

PART NO.	AIRCRAFT	TEMP. ZONES
908579-2	CONVAIR 880	575°F, 765°F
908579-3	KC-135	450°F, 675°F, 850°F

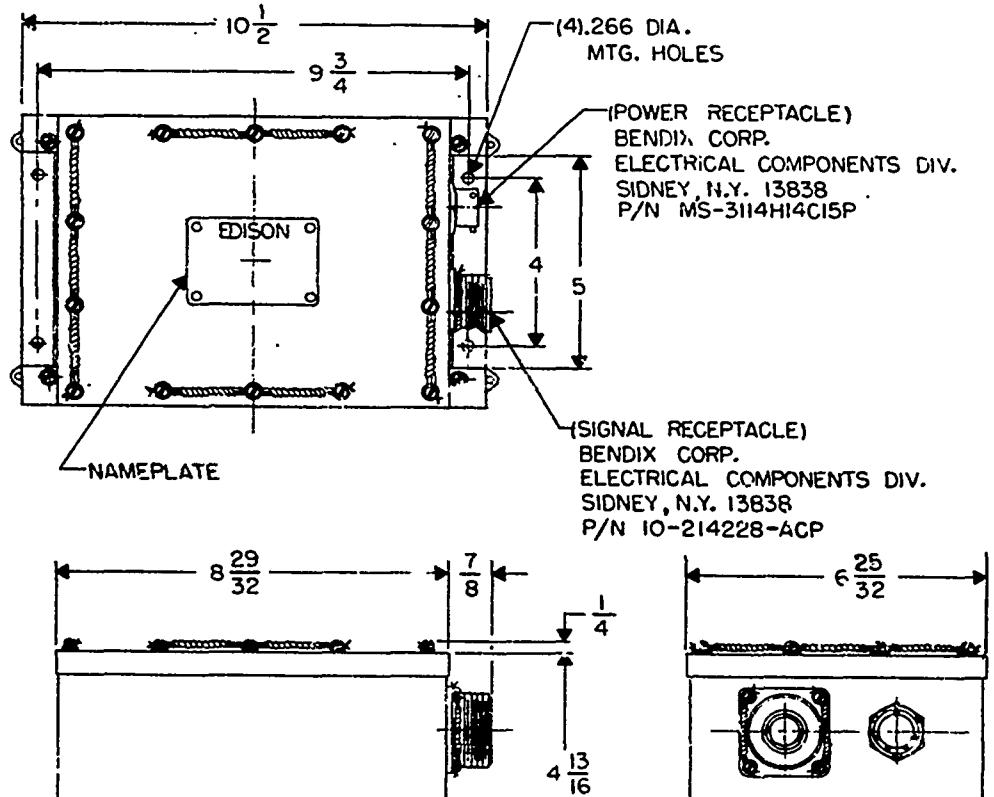

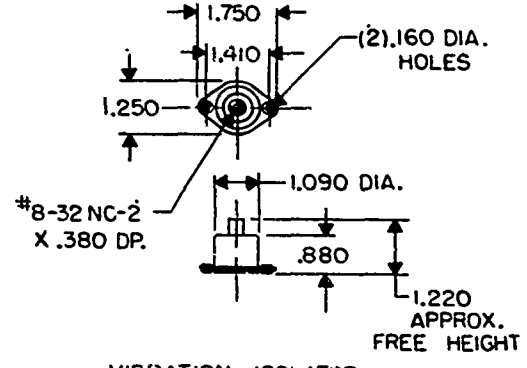

VIBRATION ISOLATOR
& SHOCK ABSORBER

BARRY CONTROLS TYPE #T22-AB-3

FIGURE 19. CONTROL BOX ASSEMBLY

3. PROTOTYPE INSTALLATION

3.1 Detector Circuit

It is of utmost importance that the detector cable be installed at all potential sources of overheat and at points of air egress in such a position that the cable be directly in the path of normal air flow through the nacelle or other area to be guarded.

3.1.1 Make detector cable runs as straight as possible observing a minimum bend radius of one-half inch.

3.1.2 In general it is recommended that the cable be supported by cable clamps at intervals of six inches and at the center of each bend.

3.1.3 Avoid installing cable in a manner that would permit chafing against adjacent structures.

3.2 Junction Box

Install the junction box assembly in any protected location where vibracion and shock capabilities are not exceeded. In addition the junction box mounting structure should have the smallest possible motion relative to sensor cable or extension cable mounting structure.

3.3 Thermocouple Extension Wire Assembly

Each end of the thermocouple extension wiring is joined to its corresponding cable plug by means of insertable crimp-type contacts. The following tabulation presents the connector assemblies, contacts and associated crimping tools.

T.A. Edison P/N 908405 Cable Plug Connector (To Junction Box End)

Item	Quantity	Description
1	1	Cable plug (socket type) with cable clamp. Bendix P/N BT06M-28-ACS
2	6	Iron crimp type contacts. In positions A, C, E, G, J, L. Bendix P/N 10-407805-23G.
3	6	Constantan crimp type contacts. In positions B, D, F, H, K, M. Bendix P/N 10-407805-24G.

Item	Quantity	Description
4	8	Copper (standard) crimp type contacts. In positions N, P, Q, R, S, T, U. Bendix P/N 10-407019-169.
5	1	Crimping kit. Bendix P/N 11-6941-4
6	1	Contact crimp positioner. Bendix P/N 11-6932-28.
8	1	Torque wrench. Bendix P/N 11-2934.

Complete technical data for the assembly of this type of connector is available in the following Bendix publications.

1. Form L-406-3 titled "Service Instructions. Bendix High Temperature Electrical Connectors HT, BT-MA, BT-M."

2. Form L-729-1 titled "Operation and Maintenance Instructions. Bendix 11-7295 (MS 3191-1) Hand Crimping Tool (and 11-7771 Series Contact Positioners)."

T.A. Edison P/N 908419 Cable Plug (To Control Unit End)

Item	Quantity	Description
1	1	Cable plug (socket type) with cable clamp. Bendix P/N 85-521547-ACS
2	6	Iron crimp type contacts for positions A, C, E, G, J, L. Bendix P/N 10-248995-13S
3	6	Constantan crimp type contacts. In positions B, D, F, H, K, M. Bendix P/N 10-248995-14S
4	8	Copper (standard) crimp type contacts. In positions N, P, Q, R, S, T, U. Bendix P/N 10-113239-16S
5	1	Crimping tool. Bendix P/N 11-7295
6	1	Contact crimp positioner. Bendix P/N 11-7771-2
7	1	Insertion tool. Bendix P/N 11-7345
8	1	Removal tool. Bendix P/N 11-8250

Complete technical data for the assembly of this type of connector is available in the following Bendix publications.

1. Form L-679 titled "Installation Instructions for the Bendix 10-, 75-, and 80-214000 Series Connectors."

2. Form L-757-2 titled "75-, 81-, 82-, 83- and 85- Series Connectors Installation Instructions."

3.4 Control Assembly

Install the control assembly in any protected location where vibration and shock are not excessive. Both assemblies, T.A.E. P/N 908579-2 and P/N 908579-3 contain vibration isolators which are rugged in construction, allowing mounting of the assemblies in any one of three planes.

4. SYSTEM INTEGRITY TEST

After the entire system, from sensor cable to control unit, has been installed as shown in Figure 20, system integrity is determined by pressing the momentary test button which applies 28VDC to the test relays incorporated in each zone detector. In turn, each relay disconnects one end of its associated loop and transfers that end to a test source resembling the sensor cable at alarm, causing activation of the alarm channels by way of the entire sensor loop circuit and a corresponding display of an alarm condition. For an open in sensor loop circuitry or a short between center wire and sheath of the sensor, test voltage would not be transmitted to the end of the loop still connected to the alarm channel and, consequently, an integrity alarm will not occur.

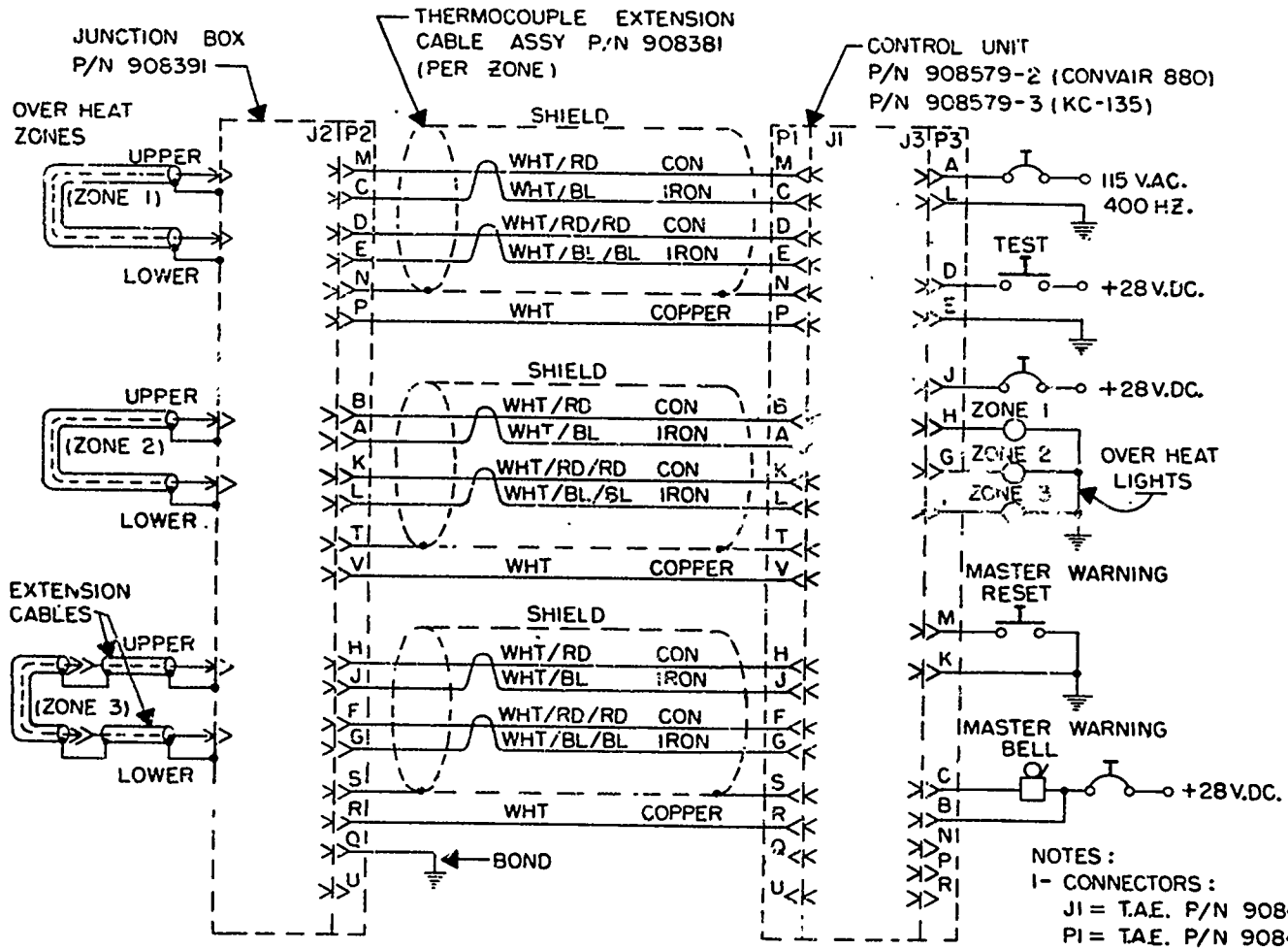

FIGURE 20. SYSTEM WIRING FOR SELF-GENERATING OVERHEAT DETECTION SYSTEM

NOTES:

1- CONNECTORS:

J1 = T.A.E. P/N 908420
P1 = T.A.E. P/N 908419
J2 = T.A.E. P/N 908406
P2 = T.A.E. P/N 908405
J3 = MS-3114H14C-15P
P3 = MS-3116F14-15S

2- ZONES AND ALARM TEMPERATURES:

AIRCRAFT	1	2	3
KC-135	450°F	675°F	850°F
CONVAIR	—	575°F	765°F

APPENDIX V

PERFORMANCE TESTING

REPORT NO. E.T. - 001
Date June 12, 1971

THOMAS A. EDISON INSTRUMENT DIVISION
McGraw-Edison Company
West Orange, N.J.

QUALITY CONTROL REPORT
PERFORMANCE TESTING
OF
SELF GENERATING OVERHEAT DETECTION SYSTEMS
AIR FORCE CONTRACT F33615-70-C-1271

Prepared by: H.A. Schuppe
H.A. Schuppe
Environmental Test
Supervisor

Approved by: F. Preziosi
F. Preziosi
Q.C. Engineering
Supervisor

Approved by: R.F. Ryer
R.F. Ryer
R & D Section
Head

1. OBJECT

This report documents the qualification test program performed by T.A. Edison, Instrument Division of McGraw-Edison Co. on two (2) Overheat Detection Systems to demonstrate compliance to Air Force Contract No. F-33615-70-C-1271, Exhibit A, Par. III E. The two systems consisted of the following items:

SYSTEM A	SYSTEM B
1-Control Box: P/N 908579-3 S/N 12/71/01	P/N 908579-2, S/N 12/71/01
1-Junction Box: P/N 908391, S/N 11/71/01	P/N 908391, S/N 11/71/02
1-Sensor Cable: 850°F, 16FT.	765°F Cable 18 FT.
1-Sensor Cable: 675°F, 16FT.	575°F Cable 32 Ft.
1-Sensor Cable: 450°F, 18FT.	
2-Inert Cables: 6FT.	6FT.
1-Interconnecting Cable Assembly:	Control to Junction Box Control to Junction Box

Note: 2 Five foot cables replaced sensor cables on System A for shock and vibration tests, and is referred to as "System C" These cables were a 675°F alarm and 765°F alarm types.

2.0 ADMINISTRATIVE DATE

The following tests were performed by New York Testing Laboratories Inc., Westbury, L.I., N.Y.:
Sand and Dust; System-A
Rain; System-A
Fungus; System-B
The vibration test of the control box of System-C was performed by Ogden Laboratories, L.I., N.Y.
All remaining tests, listed in Para. 4.0 were performed at the Thomas A. Edison Instrument Division Facilities.

3.0 APPLICABLE DOCUMENTS

MIL-F-7872C Fire and Overheat Warning Systems, Continuous, Aircraft: Test and Installation of
MIL-STD-810B Military Standard, Environmental Test Methods
A.F. Contract F-33615-70-C-1271, Performance Testing Of Self Generating Overheat Detection Systems

4.0 TESTING PERFORMED

The following tests were performed:

TEST PERFORMED	SYSTEMS SUBJECTED	PARAGRAPH NO.	REFERENCE SPECIFICATION	PARAGRAPH, METHOD OR PROCEDURE NO.
Test function	A,B	6.1	MIL-F-7872C	4.6.10
Salt Water immersion	A,B	6.2	MIL-F-7872C	4.6.34
Calibration test	A,B	6.3	MIL-F-7872C	4.6.13
Room Temperature block test	A,B	6.4	Per A.F. Contract	
Elevated Temp. Block Test	A,B	6.5	Per A.F. Contract	
Altitude	A,B	6.6	Per A.F. Contract	
Low temperature	A,B	6.7	MIL-F-7872C	4.6.15
High Temperature	A,B	6.8	MIL-F-7872C	4.6.14
Thermal shock	A,B	6.9	MIL-STD-810B	Meth. 503, Proc. I
Humidity	A	6.10	MIL-STD-810B	Meth. 507, Proc. I

TEST PERFORMED	SYSTEMS SUBJECTED	PARAGRAPH NO.	REFERENCE SPECIFICATION	PARAGRAPH, METHOI OR PROCEDURE NO.
Salt fog	A	6.11	MIL-STD-810B	Meth. 509, Proc. I
Rain	A	6.12	MIL-STD-810B	Meth 506, Proc. I
Sand and dust	A	6.13	MIL-STD-810B	Meth 510, Proc. I
Fungus	B	6.14	MIL-STD-810B	Meth. 508
Vibration	C (A-system) (5'cables (2)	6.15	MIL-STD-810B	Meth. 514, Proc. I Curve E, Para 1,2 & 3
Mechanical shock	C (A-system) (2-5'cables)	6.16	MIL-STD-810B	Meth. 516, Proc. I
Repeated response and clearance	A,B	6.17	MIL-STD-7872C	Para. 4.6.28
Sensing element flame proof test	A,B	6.18	MIL-STD-7872C	4.6.30

4.1 TEST EQUIPMENT

DESCRIPTION	MODEL NO.	SERIAL NO.
Fluidized solids reservoir	TH900	N/A
Temperature bath, Procedyne		
Temp. chamber, Delta	5707	56119
T.C. bridge, Mini-Mite	70200	D-5400
Temp. chamber, Associated	SLHU-5-cr/lc	N/A
Vibration system, Ling	B-290	134
Accelerometer, Endevco	2221D	UK-27
Vibration/Shock fixture		E.T. 1001
Altitude chamber, International Radiant		T.A.E. #4301
Shock machine, Barry	B-18	N/A
Humidity chamber, Associated	HB-4104	5337
Salt spray chamber, Industrial Filter & Pump Mfg., Co.	CAH-1	5-2179
Burner, Propane	(per fig. I of MIL-F-7872C)	

5.0 CONCLUSION

Both test systems performed within specification tolerances during and after each test of this program except as noted in results section.

6.0 TEST PROCEDURES AND RESULTS

6.1 TEST FUNCTION

The system under test was energized with 28V.D.C. and 115V. 400 HZ: A.C. The system self test circuit was energized, the master and individual relay were checked for proper operation.

Both test systems performed within specification tolerances.

See Diagram-A, Appendix-I for system hook-up.

6.2 SALT WATER IMMERSION TEST

The temperature detecting able connectors were detached, one end at a time and immersed in a 5% salt solution. The system under test was monitored for false alarms. After each immersion the connector was gently shaken to remove excess solution and reconnected to the junction box or inert cable, if included in that particular circuit. The self test circuit for the cable under test was then checked for proper operation. All detector cables of both test systems performed properly during this test.

6.3 CALIBRATION TEST

Each detector cable of each system was immersed in a fluidized sand bath at approximately 100°F below its specified alarm temperature. The sand bath temperature was slowly increased until the system fire alarm was triggered. Then, the sand bath temperature was slowly decreased until the alarm indicator light went out. A complete tabulation of the data recorded for each cable is contained in Table I, Appendix I.

Both systems performed within specification tolerances, ±6% of cables nominal values.

6.4 ROOM TEMPERATURE BLOCK TEST

Each detector cable of each system was tested for triggering temperature by heating first a 12 inch portion of the cable, then a 6 inch portion and finally a 3 inch portion. Each of the three afore-mentioned tests were repeated with one connector not coupled to the junction box. Complete results of these tests are listed in Table II, Appendix I.

6.5 ELEVATED TEMPERATURE BLOCK TEST

Each detector cable of each system was tested for triggering temperature as in the previous room temperature block test with one exception. The portion of cable not within the temperature block was maintained at a temperature of 200°F. below the cables' specified triggering temperature. The temperature of the external portion of cable was maintained by immersion in a fluidized sand bath held at the required temperature. See Table III Appendix I for a tabulation of data recorded during this test.

6.6 ALTITUDE

Each system was subjected, individually, to the following test.

The system was placed in the altitude chamber. The ambient chamber temperature was reduced to -54°C at sea level pressure. The chamber ambient was maintained at -54°C during the decrease in chamber pressure to 100,000 FT. altitude. This condition was maintained for 1.0 hour. During these conditions the self test circuit was checked every 0.5 HR. Following the hold at altitude the chamber conditions were returned to room temperature and sea level altitude and the self test circuit for each channel was rechecked.

Both systems performed satisfactorily during all phases of these tests.

6.7 LOW TEMPERATURE

Each system was subjected to -54°C for four hours. Upon conclusion of the hold period the sensor cables and junction box assembly were removed from the temperature chamber. The control unit was maintained at -54°C while the calibration test of Para. 6.3 was repeated on the sensor cables.

Both systems performed satisfactorily during the test and alarmed within ±6% of their nominal alarm temperatures as required. See Table IV, Appendix I for test data recorded during this test.

6.8 HIGH TEMPERATURE

Each system was subjected to a 4 Hr. ambient temperature hold of +71°C. At the end of this time, the system under test was tested via the self test circuit.

Following the +71°C hold and self test check the junction box and detector cables were removed. While the control box was maintained at +71°C the calibration test of Para. 6.3 was repeated on each detector cable. Both systems performed normally during this test and alarmed within ±6% of their normal alarm temperatures. See Table V, Appendix I for test data recorded during this test.

6.9 THERMAL SHOCK

Both systems were subjected to the thermal shock test of MIL-STD-810B, Method 503, Procedure I. Following this test each system was subjected to the self test functional check. Both systems performed within specification upon completion of these tests.

Temperature extremes were +71°C and -54°C.

6.10 HUMIDITY

The A-System was subjected to the 10 day humidity test of MIL-STD-810B, Method 507, ProcedureI. Immediately following this test the self test circuit was checked. The system performed properly after the humidity test.

6.11 SALT FOG

System-A was subjected to the Salt Fog Test of MIL-STD-810B, Method 509, Procedure I (5% salt solution by weight). Immediately following the test the self test circuit was checked for proper operation. The system was also inspected externally for corrosion. Following these tests the system was stored at room ambient conditions for 48 hours and then subjected to the self test functional check.

The system operated properly during each test and did not show any signs of corrosion on any component.

6.12 RAIN

Performed by N.Y. Testing Labs; see report in Appendix-II.

The test system (System-A) performed satisfactorily upon completion of this test.

6.13 SAND & DUST

Performed by N.Y. Testing Labs; see report in Appendix II.

The test system (System-A) performed satisfactorily upon completion of this test.

6.14 FUNGUS

Performed on System-B by N.Y. Testing Labs. See report in Appendix-II.

6.15 VIBRATION

The test system was subjected to the Vibration Test of MIL-STD-810B, Method 514, Procedure I, Curve-E, Paragraphs 1,2 and 3, Time Schedule I. The junction box and two 5 foot cables were vibrated separately from the control box. The energized control box was connected to the junction box with the interconnecting cable during vibration testing and monitored for false alarms.

During initial surveys of the control box, severe internal resonant conditions were noted upon the circuit boards. Design changes were made to the control box mounting configuration which included four (one at each corner mounting location) Barry Controls Isolators, Type #T-22AB-3. Also supporting brackets were added internally to the circuit boards.

Then, the Control Box was subjected to the required vibration test at Ogden Test Labs, L.I., N.Y. See report attached, Appendix-II.

The System was subjected to the self test check upon completion of all vibration testing & performed within specification limits, and no mechanical damage was evident.

6.16 MECHANICAL SHOCK (PERFORMED ON SYSTEM A)

The test system was subjected to three (3) 20'G', .011 second duration terminal sawtooth impacts in each direction of its three (3) orthoganal axes. (A total of 18 impacts.)

The self test functional test was performed upon completion of this test. The system performed per specification. Also, no mechanical damage was evident upon post test visual examination.

All components were hard mounted during this test. The control unit tested did not have the supporting brackets as added for vibration.

6.17 REPEATED RESPONSE AND CLEARANCE (PERFORMED ON SYSTEMS A & B)

Each cable of each system was subjected to the flame test of Paragraph 4.6.28 of MIL-F-7872C, except that no vibration was performed during these tests. Data recorded during these tests is listed in Table VI.

The flame was generated with the burner illustrated in Fig. I, Page 4, of MIL-D-7872-C (ASG). The burner was operated as specified in Paragraph 4.5.4.1 in the aforementioned specification. Both systems met the response requirements (5 seconds for 2000°F flame and 10 seconds for 1500°F flame). The systems met the clearance time requirements except for the 450°F cable which exceeded the 30 second requirement by 1 to 2 seconds.

6.18 SENSING ELEMENT FLAME PROOF TEST

Each sensing cable of each system was subjected to the flame test of Paragraph 4.6.30 of MIL-F-7872C. The cables using inert extension cables were also subjected to this flame test at the junction point of the inert and sensing cable, including the connector. Data recorded during these tests is listed in Table VII. Both systems met the specification requirements.

APPENDIX I

PERFORMANCE TEST DATA & TEST UNIT HOOK-UP DIAGRAM

DIAGRAM - A

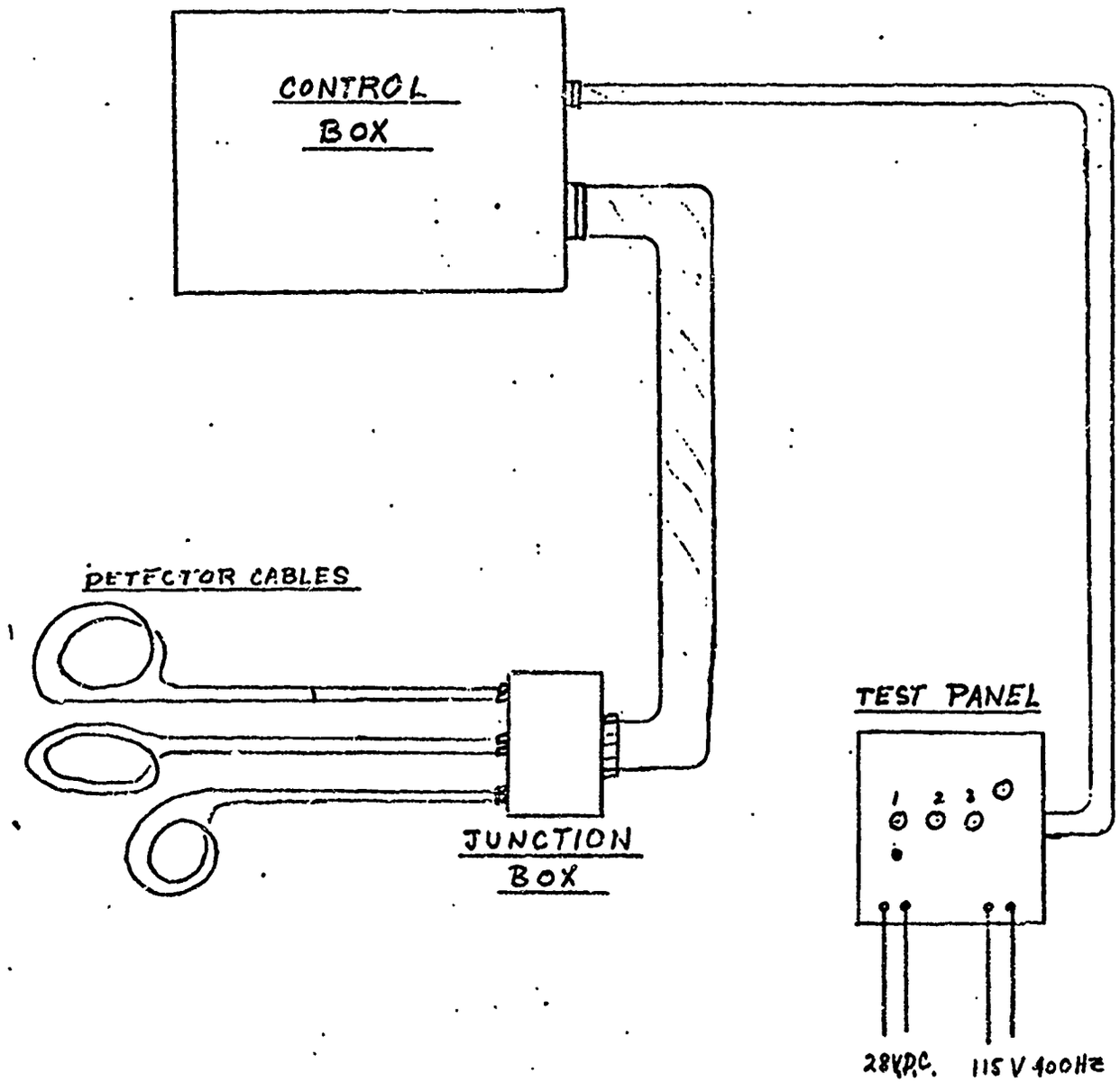
CONTROL BOX
DETECTOR CABLES
JUNCTION BOX
TEST PANEL
1 2 3
28VDC.
115 V 400Hz

APPENDIX I

TABLE I: CALIBRATION TEST RESULTS

SYSTEM	CABLE	ALARM ON (°F)	ALARM OFF (°F)
A	450°F	452	451
A	675°F	676	675
A	850°F	832	831
B	575°F	573	572
B	765°F	766	762

TABLE II: ROOM TEMPERATURE BLOCK TEST DATA

SYSTEM-A	LENGTH IN BLOCK	CONNECTORS ATTACHED	TEMP. ALARM TRIGGERED (°F) 450°F CABLE	675°F CABLE	850°F CABLE
	12"	2	510	827	1063
	12"	1	512	830	1063
	6"	2	540	889	1120
	6"	1	541	891	1121
	3"	2	559	902	1166
	3"	1	559	903	1167

SYSTEM-B	LENGTH IN BLOCK	CONNECTORS ATTACHED	TEMP. ALARM TRIGGERED (°F) 575°F CABLE	765°F CABLE
	12"	2	707	840
	12"	1	707	840
	6"	2	768	841
	6"	1	774	842
	3"	2	778	942
	3"	1	778	951

APPENDIX I

TABLE III: HIGH TEMPERATURE BLOCK TEST

SYSTEM A

LENGTH IN BLOCK	CONNECTORS ATTACHED	TEMP. ALARM TRIGGERED (°F) 450°F CABLE 250°F AMB.	675°F CABLE 465°F AMB.	850°F CABLE 650°F AMB.
12"	2	522°	812	1140
12"	1	522°	812	1140
6"	2	545°	854	1170
6"	1	545°	854	1171
3"	2	573°	859	1177
3"	1	573°	869	1175

SYSTEM-B

LENGTH IN BLOCK	CONNECTORS ATTACHED	TEMP. ALARM TRIGGERED (°F) 575°F CABLE 375°F. AMB.	765°F CABLE 565°F AMB.
12"	2	705	908
12"	1	705	909
6"	2	757	955
6"	1	757	955
3"	2	784	1006
3"	1	785	1009

TABLE IV: LOW TEMPERATURE TEST

SYSTEM A CABLE	ALARM TEMP. (°F)	SYSTEM B CABLE	ALARM TEMP (°F)
450°F	453-455°F	575	573-575°F
675°F	669-671°F	765	750-752°F
850°F	824-825°F		

TABLE V: HIGH TEMPERATURE TEST

SYSTEM A CABLE	ALARM TEMP. (°F)	SYSTEM B CABLE	ALARM TEMP. (°F)
450°F	445°F	575°F	571-573°F
675°F	676°-679°F	765°F	759-762°F
850°F	828°-830°F		

APPENDIX I

TABLE VII: FLAME PROOF TEST

SYSTEM A

CABLE TYPE	EXPOSURE NO.	EXPOSURE TIME (MIN.S)	FLAME TEMP. (°F)	RESPONSE TIME (SEC.)	CLEARANCE TIME (SEC.)	ALARM DURING EXP.
450°F	1	5:00	1500	5.6	34.2	ON
	2	0:06	1500	5.8		ON
675°F	1	5:00 MIN	1525	7.7	22.7	ON
	2	0:08	1525	7.9		ON
850°F	1	5:00 MIN	2030°	3.5	21.6	ON
	2	0:03.3	2030	3.3		ON
850°F+INERT	1	5:00	2025	3.0	51.8	ON
CABLE & CONN.	2	0.03.6	2025	3.6		ON

SYSTEM B

CABLE TYPE	EXPOSURE NO.	EXPOSURE TIME (MIN.S)	FLAME TEMP. (°F)	RESPONSE TIME (SEC.)	CLEARANCE TIME (SEC.)	ALARM DURING EXP.
575°	1	5:00	1520°	7.8	23.3	ON
	2	0:06+	1520°	8.0		ON
765°	1	5:00	2035°	4.9	17.8	ON
	2	0:05	2035	4.8		ON
765°+INERT	1	5:00	2030	4.7	50.4	ON
CABLE & CONN.	2	0:05.4	2030	5.4		ON

APPENDIX I

TABLE VI: REPEATED RESPONSE & CLEARANCE

SYSTEM A

CABLE TYPE	EXPOSURE NO.	CABLE TEMP. @ START	FLAME TEMP.	RESPONSE TIME (SEC.)	EXPOSURE TIME (SEC.)	CLEARANCE TIME (SEC.)
450°F	1	ROOM	1500°F	5.1	60+	32.2
	2	ROOM	1490°F	5.3	60+	31.8
	3	ROOM	1472°F	5.2	60+	32.0
675°	1	ROOM	1525°F	7.8	60+	23.3
	2	ROOM	1528°F	8.3	60+	20.5
	3	ROOM	1528°F	7.7	60+	22.4
850°F	1	482°F	2020°F	3.8+03.9	60+	23.1
	2	496°	2020°F	3.7	60+	22.7
	3	475°	2020°F	3.5	60+	22.7

SYSTEM B

575°F	1	ROOM	1520	8.1	60+	23.2
	2	ROOM	1520	8.8	60+	24.6
	3	ROOM	1520	7.8	60+	23.8
765°F	1	ROOM	2025	4.6	60+	20.0
	2	ROOM	2025	4.7	60+	19.1
	3	ROOM	2025	4.8	60+	18.2

APPENDIX II

OUTSIDE TEST LAB REPORTS

1. NEW YORK TESTING LABORATORIES, INC.

2. OGDEN LABORATORIES

NEW YORK TESTING LABORATORIES, INC.
81 URBAN AVENUE, WESTBURY, L. I., N.Y. 11590 • 516 EDgewood 4-7770

Cover Page

Lab. No. L-40,685

Purchase Order #231011

REPORT OF ENVIRONMENTAL TESTS
ON
AIRCRAFT OVERHEAT DETECTOR
FOR
THOMAS A. EDISON INSTRUMENT DIVISION
61 ALDEN STREET
WEST ORANGE, N.J. 07051

21 MARCH 1972

ENVIRONMENTAL, ELECTRONIC, NON-DESTRUCTIVE, MATERIALS, CHEMICAL ANALYSES AND POLLUTION CONTROL
CONSULTING ENGINEERING

TABLE OF CONTENTS

		Page No.
1.0	REFERENCES	1
2.0	PURPOSE	1
3.0	SUMMARY	1
4.0	DESCRIPTION OF TEST UNITS	1
5.0	TEST REQUIREMENTS	1
6.0	TEST CONDITIONS AND TEST EQUIPMENT	1-2
7.0	TEST PROCEDURES AND RESULTS	2-4
8.0	CONCLUSION	5
9.0	CERTIFICATION AND SIGNATURES	5

1.0 REFERENCES

1.1 MIL-STD-810B dated 15 June 1967 - Military Standard, Environmental Test Methods

1.2 Thomas A. Edison Inst. Division P.O. #231011

2.0 PURPOSE

To determine the ability of the test units to withstand the effects of environmental testing

3.0 SUMMARY

There was no visual evidence of physical damage or degradation as a result of the environmental testing.

4.0 DESCRIPTION OF TEST UNITS

4.1 Two (2) Aircraft Overheat Detectors manufactured by Thomas A. Edison Instrument Division. Each Detector consisted of one (1) Control Assembly P/N 908579-2 and one (1) Junction Box P/N 908391.

4.2 Throughout this test report the Detectors will be referred to as the test units.

5.0 TEST REQUIREMENTS

5.1 Sand and Dust - Reference 1.1, Method 510, Proc 1

5.2 Rain - Reference 1.1, Method 506, Proc 1

5.3 Fungus - Reference 1.1, Method 508

6.0 TEST CONDITIONS AND TEST EQUIPMENT

6.1 Test Conditions

Unless otherwise specified herein, all tests were performed at room ambient temperature and relative humidity and at normal barometric pressure.

6.2 Test Equipment

6.2.1 Sand and Dust Chamber, Environmental Controls, SN LE171, calibrated 1/26/72

6.2.2 Pressure Gauge, Crosby, SN LE348, calibrated 2/17/72

6.2.3 Pressure Gauge, Weksler, SN LE967, calibrated 12/27/71

6.2.4 Fungus Chamber, Tenney, SN LE226, calibrated 10/13/71

7.0 TEST PROCEDURES AND RESULTS

7.1 SAND AND DUST

Test Unit: #2

7.1.1 Procedure

The test unit was placed in the sand and dust chamber and subjected to a sand and dust test utilizing sand and dust (97-99% by weight SiO_2) of angular structure, having the size distribution as specified. The test was performed as follows:

a) The chamber temperature was set to 23°C. with a relative humidity less than 22%. The air was adjusted to a velocity of 1550 feet per minute with a dust concentration of 0.3 grams per cubic foot. These conditions were maintained for six hours.

b) The dust feed was then stopped and the air velocity adjusted to 300 feet per minute. The chamber temperature was then adjusted to 63°C. with a relative humidity of less than 10%. These conditions were maintained for a period of 16 hours.

c) With the chamber temperature at 63°C., the air velocity was adjusted to 1550 feet per minute with a dust concentration of 0.3 grams per cubic foot. These conditions were maintained for six hours.

d) All chamber controls were then turned off and the test unit was allowed to return to room conditions. Accumulated dust was removed from the test unit, care being taken to avoid introduction of additional dust into the test unit. Under no circumstances was dust removed by air blast or vacuum cleaning.

Following the test, the test unit was electrically checked by Thomas A. Edison personnel.

7.1.2 Results

There was no external visual evidence of physical damage or degradation as a result of the test.

7.2 RAIN

Test Unit: #2

7.2.1 Procedure

The test unit was placed in the rain chamber in its normal position and subjected to a simulated rainfall produced by water spray nozzles of such design that the water was emitted in the form of droplets having a diameter range between 1 and 4 millimeters. The temperature of the water was 15°C. The rain exposure was as follows:

a) Rainfall at 4.5 inches/hour for a period of 10 minutes.

b) Rainfall at 11.8 inches/hour for a period of 5 minutes.

c) Rainfall at 4.5 inches/hour for a period of 15 minutes.

Starting five (5) minutes after the initiation of the rain, a wind source was turned on which produced a horizontal wind velocity of 40 mph (1350 ft/min). The wind was continued for the remainder of the rain period.
The above test was repeated for each of the four sides of the test unit for a total of two (2) hours of wind blown rain.

Following the test, the test unit was operationally checked by Thomas A. Edison personnel.

7.2.2 Results

There was no visual evidence of physical damage or degradation as a result of the test.

7.3 FUNGUS

Test Unit: #1

7.3.1 Procedure

Approximately 10 milliliters of distilled water (having a pH value between 5.8 and 7.2 at 25 deg. C. (77 deg. F.) was introduced into a tube culture of species of fungi and the spores were brought into suspension by vigorous shaking. This was repeated for the species of fungi listed below:

Group I - Aspergillus Niger
Group II - Aspergillus Flavus
Group III - Aspergillus Versicolor
Group IV - Penicillium Funiculosum
Group V - Chaetomium Globosum

The separate spore suspensions from the species of fungi were mixed together to form a composite suspension. The test unit was then placed within the fungus chamber and sprayed with the suspension of mixed spores. Three pieces each of preservative free vegetable tanned leather and protein glue bonded cork were also placed in the chamber as control items and sprayed with the composite suspension. The chamber was sealed and the internal chamber temperature was increased to 86 deg. F. ± 3.5 deg. F. with a relative humidity of 95% ± 5%. These conditions were maintained for a period of 28 days. At the end of 14 days, the control items were inspected for abundance of growth.

At the completion of the 28-day period of exposure, the test unit was removed from the chamber and visually examined for evidence of fungus growth, deterioration, and corrosion.

7.3.2 Results

There was no evidence of fungus growth on the test unit as a result of the test.

Note

Fungus growth was evident on the control items indicating that the environment had been capable of supporting fungus growth.

8.0 CONCLUSION

Final evaluation to be performed by Thomas A. Edison Inst. Division.

9.0 CERTIFICATION AND SIGNATURES

We certify that this report is a true report of results obtained from our tests of this material.

Respectfully submitted,

NEW YORK TESTING LABORATORIES, INC.

Lynn A. Westley, Project Engineer

G. J. Horvitz, Chief Officer

Attn: Mr. H. Schuppe

ea

DEER PARK DIVISION
OGDEN TECHNOLOGY LABORATORIES, INC.
Subsidiary of OGDEN CORPORATION
COMAC ROAD, DEER PARK, LONG ISLAND, NEW YORK 11729 • TEL: 516-667-7200
TWX: 510-227-6072

2 June 1972

Edison Instrument Company
New Brunswick, New Jersey

Att: Mr. Ryer

Subject: Control Ass'y- overheat detector P/N 908579-3

Reference:
1) MIL-STD-810B
2) Edison P.O. #4144-11
3) OTL Job No. 8941

Gentlemen:

Ogden Technology Laboratories, Inc, Quality Assurance Dept., hereby certifies that a vibration test was conducted on the above subject in accordance with reference 1 and 2. The test was performed to Procedure I, Table 514.1-II, Curve E, with vibration isolators.

Discussion: 5/25/72 - Y Axis

Two and ½ hours of cycling was performed.
30 minutes of resonance dwell was conducted at 16 Hz.

5/26/72 - X Axis

Two and ½ hours of cycling was performed.
30 minutes of resonance dwell was conducted at 17 Hz.

5/26/72 - Z Axis

Two and ½ hours of cycling was performed.
30 minutes of resonance dwell was conducted at 30 Hz.

There was no visible evidence of damage as a result of this test. If any further information is required, please do not hesitate to contact us.

Very truly yours,
OGDEN TECHNOLOGY LABORATORIES, INC.

Harry Golinger

H.Golinger, Project Engineer

J. Bonner

J. Bonner, Quality Assurance Mgr.

HG:ek
Enc.

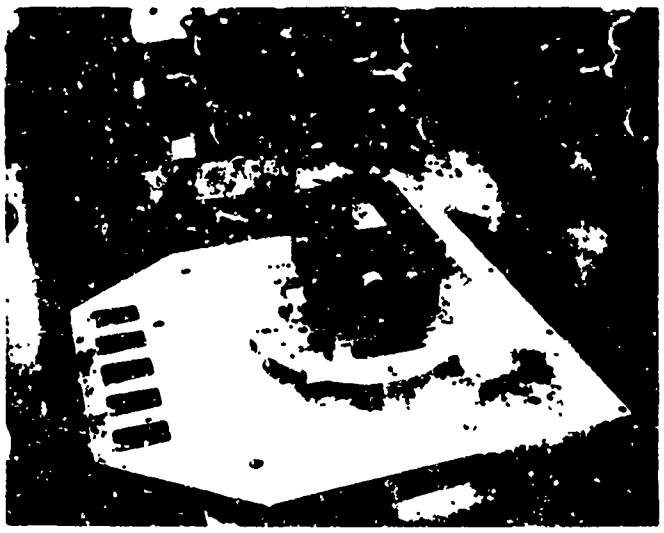

Y AXIS

Reproduced from best available copy.

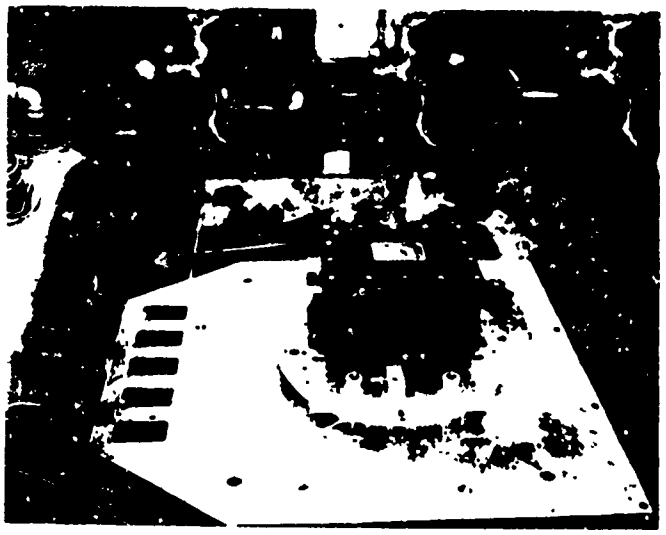

X AXIS

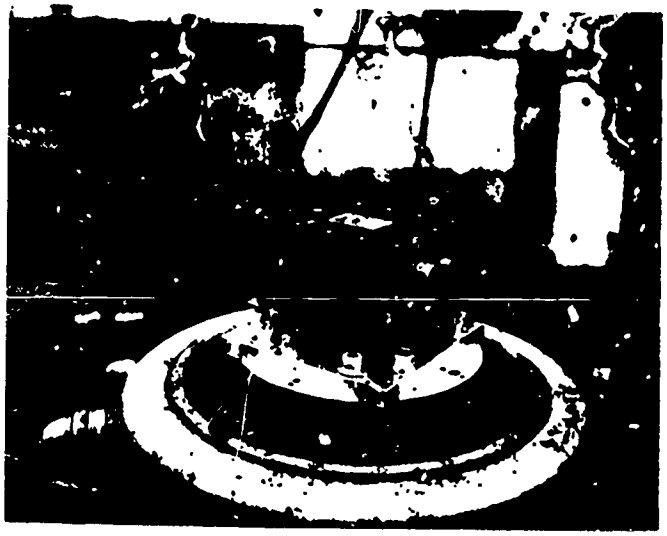

Z AXIS

TEST EQUIPMENT UTILIZED

1) Vibration Exciter
   M. B. Electronics
   Model: C50; S/N 101
   Range: N/A; Acc;N/A
   Calibration: None required

2) Power Amplifier
   M. B. Electronics
   Model: 4150; S/N 101
   Range: N/A; Acc.N/A
   Calibration: None required

3) Automatic Vibration Exciter Controller
   Bruel & Kjaer
   Model: 1025; S/N 130950
   Range: Displacement - 10 inches
          Acceleration - 1000 g
          Frequency: 5 Hz to 10,000 Hz.
   Accuracy: Frequency - 1% ± 0.25 Hz.
             Vibration Meter: ± 4%
   Calibration: Before each use

4) Signal Amplifier
   Unholtz-Dickie Corporation
   Model: 607-RMG-3A; S/N 117
   Range: 1,3,10,30,100,300, 1,000
   Accuracy: Frequency ± 1.5% 10 Hz to 5 KHz
             Linearity ± 1%
   Calibration Interval: 6 months
   Last Calibration: 4/6/72

5) Accelerometers
   Endevco Corporation
   Model: 2215C; S/N LB04
   Range: 5 Hz to 6000 Hz, 10,000 'G'
   Accuracy: ± 4%
   Calibration Interval: 6 months
   Last Calibration: 12/6/72

All instrumentation and equipment calibration is conducted in accordance with Specification MIL-Q-9858A as further defined in MIL-C-45662A "Calibration System Requirements" and is traceable to the National Bureau of Standards.