AD

AD 748431

RESEARCH AND DEVELOPMENT TECHNICAL REPORT

ECOM-0056-F

SLOT LINE DIGITAL FERRITE PHASE SHIFTER

FINAL REPORT

By

I. BARDASH A. G. GAYER

AUGUST 1972

DISTRIBUTION STATEMENT

APPROVED FOR PUBLIC RELEASE
DISTRIBUTION UNLIMITED

PRIOR REPORT: LIMITED

ECOM

UNITED STATES ARMY ELECTRONICS COMMAND - FORT MONMOUTH, N. J. 07703

Reproduced by
NATIONAL TECHNICAL
INFORMATION SERVICE
U S Department of Commerce
Springfield VA 22151

CONTRACT NO. DAAB07-71-C-0056
SEDCO SYSTEMS INC.
130 SCHMITT BOULEVARD
FARMINGDALE, L. I., NEW YORK 11735

64

NOTICES

Disclaimers

The findings in this report are not to be construed as an official Department of the Army position, unless so designated by other authorized documents.

The citation of trade names and names of manufacturers in this report is not to be construed as official Government endorsement or approved of commercial products or services referenced herein.

Disposition

Destroy this report when it is no longer needed. Do not return it to the originator.

Unclassified

Security Classification

DOCUMENT CONTROL DATA - R & D

(Security classification of title, body of abstract and indexing annotation must be entered when the overall report is classified)

1. ORIGINATING ACTIVITY (Corporate author)

Sedco Systems Inc.
130 Schmitt Boulevard
Farmingdale, New York 11735

2a. REPORT SECURITY CLASSIFICATION

Unclassified

2b. GROUP

3. REPORT TITLE

Slot Line Digital Ferrite Phase Shifters

4. DESCRIPTIVE NOTES (Type of report and inclusive dates)

Final Report 30 Oct 1970 to 30 June 1972

5. AUTHOR(S) (First name, middle initial, last name)

Irwin Bardash and Allan G. Gayer

6. REPORT DATE

August 1972

7a. TOTAL NO. OF PAGES

54

7b. NO. OF REFS

3

8a. CONTRACT OR GRANT NO

DAAB07-71-C-0056

b. PROJECT NO

1H6 62705A057

c. 1H6 62705A 057-02

d. 1H6 62705A057 02 30

9a. ORIGINATOR'S REPORT NUMBER(S)

9b. OTHER REPORT NO(S) (Any other numbers that may be assigned this report)

ECOM-0056-F

10. DISTRIBUTION STATEMENT

Approved for public release; Distribution unlimited.

11. SUPPLEMENTARY NOTES

12. SPONSORING MILITARY ACTIVITY

U. S. Army Electronics Command
ATTN: AMSEL-TL-MM
Fort Monmouth, N. J. 07703

13. ABSTRACT

This report describes analytical and experimental techniques utilized in the development, design and construction of nonreciprocal slotline latching ferrite phase shifters for use in phased array antenna systems. A phase shifter configuration consisting of two 0.020 inch dielectric substrates ($\varepsilon_r = 30$) surrounded by a single ferrite toroid (Trans-Tech TT1-105) with a wall thickness of 0.040 inches was shown to yield frequency independent differential phase shift of about 90°/inch from 5.0 to 10.0 GHz with an accompanying insertion loss between 2 and 3 db. A 0.040 inch slot was etched longitudinally on one of the dielectric substrates to form the slotline circuit. The length of the ferrite toroid and substrates was 4.5 inches. Insertion loss degradation has been attributed to the VSWR of the microstrip-slotline transitions used at the input and output of each device. In addition, constructional discrepancies consisting of air gaps between the dielectric inserts and ferrite toroids used to fabricate the slotline phase shifter produced further degradation in both phase and loss performance. By eliminating these discrepancies a figure of merit of 180° per db is possible as has been shown in some of the experimental data presented.

Details of illustrations in this document may be better studied on microfiche

DD FORM 1 NOV 65 1473

Unclassified

Security Classification

Unclassified

Security Classification

14 KEY WORDS	LINK A ROLE	LINK A WT	LINK B ROLE	LINK B WT	LINK C ROLE	LINK C WT
Microwave Ferrite Phase Shifters						
C- and X-Band Phase Shifters						
Radar Components						
Planar Microwave Components						

Unclassified

Security Classification

TECHNICAL REPORT ECOM-0056-F
AUGUST 1972

REPORTS CONTROL SYMBOL
OSD-1366

SLOT LINE DIGITAL FERRITE PHASE SHIFTER

FINAL REPORT

CONTRACT DAAB07-71-C-0056

Prepared by

I. BARDASH A. G. GAYER

SEDCO SYSTEMS INC.
130 Schmitt Boulevard
Farmingdale, New York 11735

For

U. S. ARMY ELECTRONICS COMMAND
Fort Monmouth, New Jersey 07703

DISTRIBUTION STATEMENT

APPROVED FOR PUBLIC RELEASE
DISTRIBUTION UNLIMITED

i.

ABSTRACT

This report describes analytical and experimental techniques utilized in the development, design and construction of nonreciprocal slotline latching ferrite phase shifters for use in phased array antenna systems. A phase shifter configuration consisting of two 0.020 inch dielectric substrates ($\epsilon_r = 30$) surrounded by a single ferrite toroid (Trans-Tech TT1-105) with a wall thickness of 0.040 inches was shown to yield frequency independent differential phase shift of about 90°/inch from 5.0 to 10.0 GHz with an accompanying insertion loss between 2 and 3 db. A 0.040 inch slot was etched longitudinally on one of the dielectric substrates to form the slotline circuit. The length of the ferrite toroid and substrates was 4.5 inches. Insertion loss degradation has been attributed to the VSWR of the microstrip-slotline transitions used at the input and output of each device. In addition, constructional discrepancies consisting of air gaps between the dielectric inserts and ferrite toroids used to fabricate the slotline phase shifter produced further degradation in both phase and loss performance. By eliminating these discrepancies a figure of merit of 180° per db is possible as has been shown in some of the experimental data presented.

TABLE OF CONTENTS

		Page
I.	INTRODUCTION	1
II.	REVIEW OF SLOTLINE CONFIGURATIONS AND CHARACTERISTICS	5
III.	SLOTLINE FERRITE PHASE SHIFTER CONFIGURATIONS	13
	A. Asymmetrical Phase Shifter	13
	B. Sandwich Phase Shifter Configuration	15
IV.	COMPUTER ANALYSES	19
	A. Phase and Impedance Calculations	19
	B. RF H Field Calculations	25
V.	DRIVER CHARACTERISTICS	32
VI.	EXPERIMENTAL PROGRAM	36
VII.	MEASUREMENTS OF FINAL DEVELOPMENTAL MODELS	45
VIII.	CONCLUSION	56

LIST OF ILLUSTRATIONS

Figure		Page
1	Photograph of Disassembled Slotline Latching Ferrite Phase Shifter	2
2	Sketch of Asymmetrical Slotline	6
3	Field Configuration of Asymmetrical Slotline	8
4	Sandwich Slotline Configuration	10
5	Field Configuration for the Sandwich Slotline Configuration	12
6	Cross-Section of Asymmetrical Slotline Ferrite Phase Shifter	14
7	Cross-Section of Single Toroid Sandwich Slotline Ferrite Phase Shifter	16
8	Cross-Section of Dual Single Toroid Sandwich Slotline Ferrite Phase Shifter	18
9	Double Sandwich Slotline Phase Shifter Cross-Section and Equivalent Circuit Model	20
10	Transverse Resonance Equation for Double Sandwich Slotline	21
11 a-b-c	Normalized Guide Wavelength vs Frequency	22, 23, 24
12 thru 16	R. F. Magnetic Field Intensities of Dual Sandwich Slotline	27 thru 31
17	B-H Loops for Digital and Flux Transfer Latching Ferrite Phase Shifter Operation	33
18	Cross-Section of Sandwich Slotline Phase Shifter	37
19	Measured Differential Phase Shift vs Dielectric Width for Experimental Slotline Phase Shifters	38

20	Measured Differential Phase Shift vs Ferrite Width for Experimental Slotline Phase Shifters	39
21	Measured Differential Phase Shift vs Insert Relative Permittivity	41
22	Swept Data of Differential Phase Shift vs Frequency (Experimental Unit)	43
23	Swept Data of Insertion Loss vs Frequency (Experimental Unit)	44
24	Photograph of Assembled Slotline Phase Shifter and Driver Circuit	46
25	Photograph of Slotlone Phase Shifter with Cover Plate Removed	47
26	Measured Differential Phase Shift vs Frequency of Final Developmental Unit	48
27	Measured Insertion Loss vs Frequency of Final Developmental Unit	49
28	Measured VSWR vs Frequency of Final Developmental Unit	51
29	Measured Differential Phase Shift vs Magnetizing Pulse Width of Final Developmental Unit	53
30	Sketch of Coax-Microstrip-Slotline Transition	55

I INTRODUCTION

This report summarizes the work done under Contract DAAB07-71-C-0056 for the U. S. Army Electronics Command, Fort Monmouth, New Jersey. The program involved the development of nonreciprocal latching Slot Line Digital Ferrite Phase Shifters for use in the C-band and X-band frequency ranges.

The slotline transmission system[1] has been shown to contain elliptically polarized H field regions which are required for producing nonreciprocal ferrite phase shifters. In addition, low loss, relatively high Q filter circuits have been built in slotline configurations. It was therefore concluded that an efficient, latching ferrite phase shifter could be developed by incorporating a microwave ferrite toroid in a slotline section. The development of such a device was dependent on being able to determine a ferrite toroid-slotline configuration that would yield good interaction between the ferrite and the propagating mode of the slotline with a minimum of concurrent insertion loss.

Figure 1 is a photograph of a disassembled slotline phase shifter which illustrates the aggregate components of the final configuration evolved during the course of the program. The device consists of a ferrite toroid, D-30 ceramic inserts with a slotline transmission system etched on one of the D-30 inserts, two slotline to microstrip transitions, two microstrip to SMA adapters, a magnetizing wire with associated contact posts and a metal housing. Differential phase shift is produced by magnetizing the ferrite toroid using the flux transfer technique. The "zero degree" phase state is obtained by saturating the ferrite

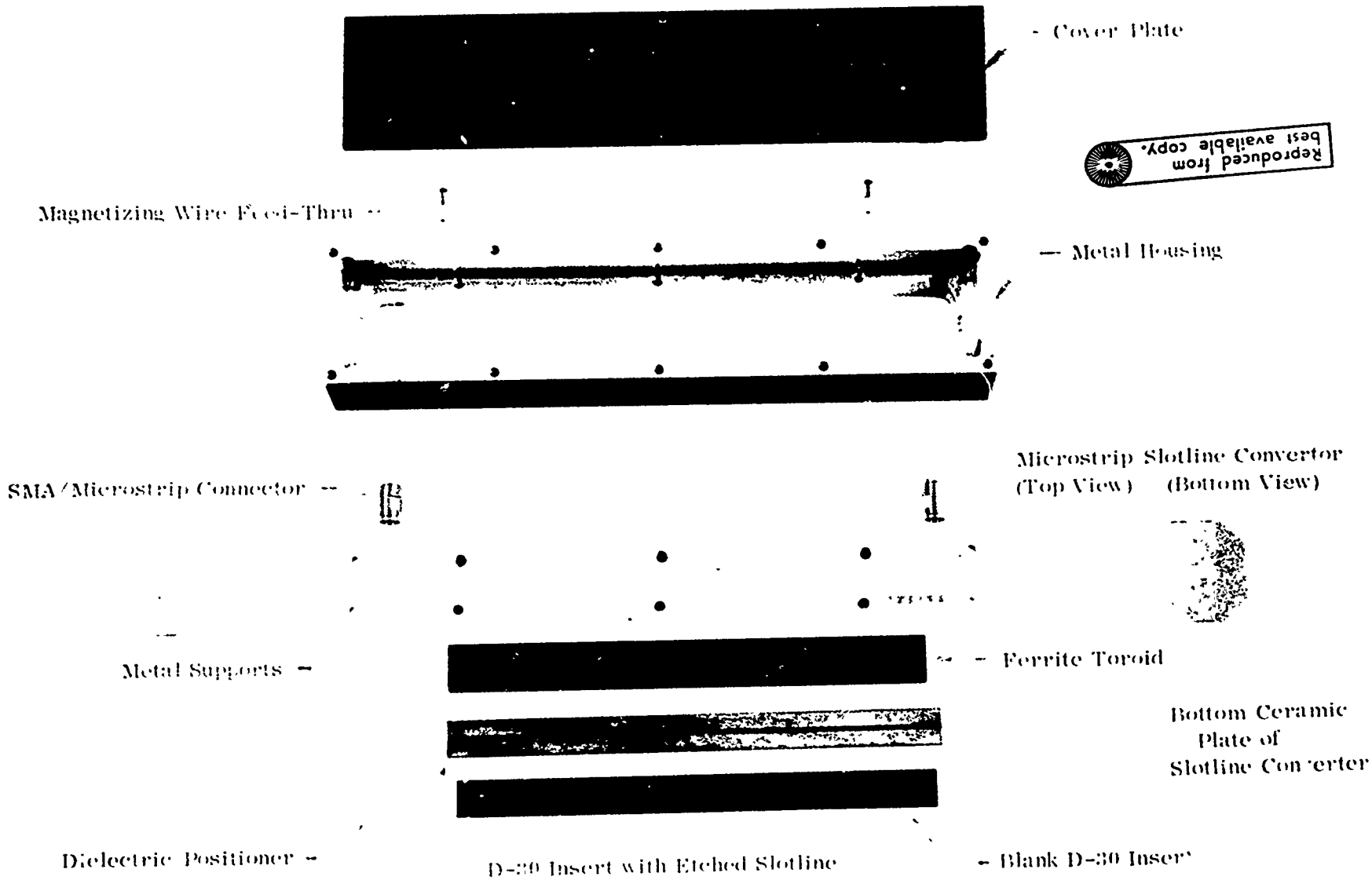

Figure 1 - PHOTOGRAPH OF DISASSEMBLED SLOTLINE LATCHING FERRITE PHASE SHIFTER

Reproduced from best available copy.

toroid to its negative remnant state. Differential phase settings are achieved by applying controlled voltage pulses to the magnetizing wire. The minor hysteresis loop characteristics of the toroid are used to latch flux levels induced in the ferrite. The resultant differential phase shift produced is proportional to the width of the applied voltage pulses.

The SMA microstrip slotline transition is used to convert input r.f. signals from a TEM mode to the required slotline mode. The slot width on the transition is designed so as to match into the slotline etched on one of the D-30 inserts within the ferrite section of the device. A sandwich slotline configuration is used in the ferrite portion of the device since this configuration yielded optimum phase shift performance. (This will be discussed in a later section of the report). Identical slotline to coax transitions are used at the output of the device. The entire device is housed in a metal case which supported the transitions as well as the ferrite toroid. Rexolite brackets hold the ferrite toroid. Measurements indicate that these brackets have no effect on the propagation characteristics of the device inferring that essentially all the r.f. fields are contained very close to the slot region of the device.

In order to derive the physical configuration used in the deliverable units, a theoretical study to determine r.f. field configuration and an experimental program involving 33 different configurations was undertaken. The theoretical analysis involved the determination of r.f. H-field configurations in the dual sandwich slotline system. Field patterns as a function of dielectric permittivity

and dimensions were plotted. During the experimental phase of the program the previously mentioned 33 configurations were evaluated to determine the effects of permittivity and dimensions on phase shifter performance. This data is presented in the following sections of the report as well as measurements made on the final, full size units.

II REVIEW OF SLOT LINE CONFIGURATIONS AND CHARACTERISTICS

In 1968, S. B. Cohn[1] reported the development and analysis of the slot line transmission system. Initial analysis dealt with the dual of the microstrip transmission system which essentially consists of a single dielectric substrate coated with a perfect conductor (on one side of the substrate) with a longitudinal slot etched into the conducting surface. The pertinent characteristics of this type of transmission system such as field configurations, propagation constants, and impedance as functions of dielectric material characteristics (r), dielectric thickness (d), and slotwidth (w) were derived. In so doing Cohn observed and reported that the slot line contained an RF magnetic field configuration which was suitable for generating nonreciprocal phase shift. He based his statement on the observation that there existed regions within the slotline that contained circularly or elliptically polarized r.f. H fields. Since such a field configuration is required to generate nonreciprocal phase shift, he felt that practical phase shifters could be realized with a slotline system.

Figure 2 is a sketch of the asymmetrical slotline analyzed by Cohn. Indicated in the figure are the dielectric substrate and the conductive surface with a slot of width w. It is easy to see that this asymmetrical configuration is the dual of the microstrip configuration. Since its construction is similar to the microstrip system, coupling between slotline and microstrip can be realized using straightforward, simple techniques. It can be shown that by crossing the center conductor of the microstrip with the slot of the slotline,

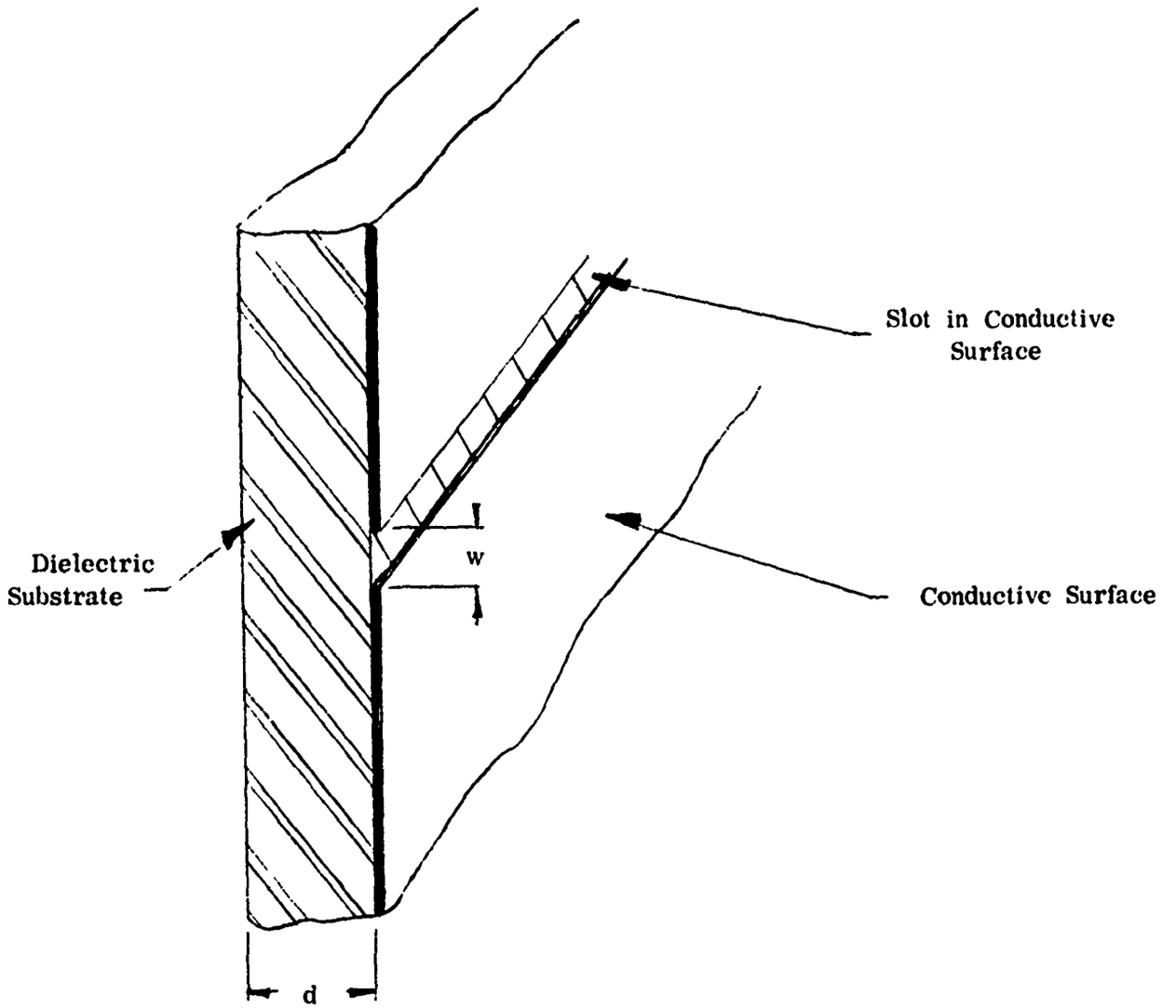

Figure 2 - Sketch of Asymmetrical Slotline

efficient coupling can be obtained. Other techniques for coupling to the slotline have been achieved with miniature coaxial cable. By connecting the outer conductor of the cable to one side of the slot and the center of the conductor to the other side, an efficient simple broadband coax to slotline transition can be achieved. Such a transition was briefly studied and used for evaluation of a preliminary experimental slotline ferrite phase shifter.

The field configuration that occurs for the asymmetrical slotline is shown in Figure 3. Note that there is a concentration of both the electric and magnetic fields in the vicinity of the slot and that most of the fields tend to propagate in the dielectric substrate. This is to be expected and is caused by the permittivity of the substrate. Mariani, Heinzman, Agrios and Cohn[2] have reported the calculated propagation (λ'/λ) and impedance (Z_0) characteristics of the slotline. They have shown the correlation of λ'/λ to permittivity as well as material and slot dimensions. Since considerable slowing is achieved it is safe to assume that a major portion of the RF field propagates in the dielectric substrate.

As shown in Figure 3 the H-fields have elliptically polarized regions which would produce nonreciprocal differential phase shift if a ferrite substrate were used in place of the indicated dielectric substrate. However, it can be shown that there may exist more than one sense of elliptical polarization within the thickness of the substrate and that magnetization in a single direction would produce cancelling effects in the two opposite senses of the elliptically polarized fields. In fact, if the magnitude of the RF H-fields associated with these two oppositely rotating elliptically polarized H-field regions are equal, zero differential phase shift would be produced by the reversal of the DC magnetic bias. Since, in

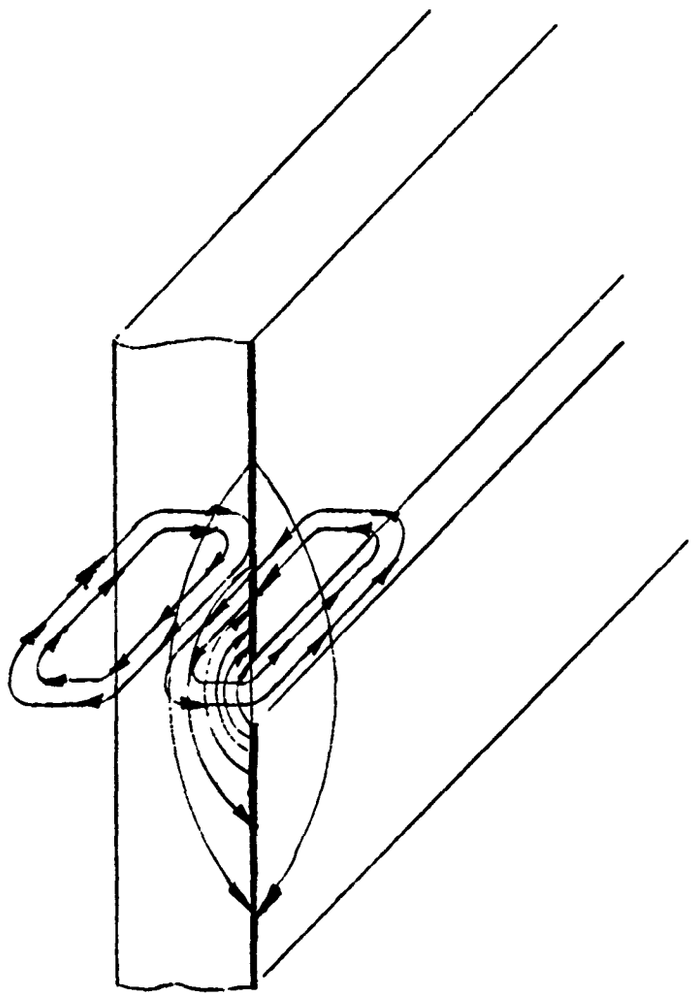

Figure 3 - Field Configuration of Asymmetrical Slotline

general, these two elliptically polarized regions are not composed of equal magnitude fields, there is indeed a net differential phase shift realized from this configuration. However, it can be concluded that the asymmetrical slotline configuration would not yield an optimum device unless the two oppositely rotating circularly polarized H fields were not permitted to propagate in the ferrite substrate simultaneously, or if oppositely magnetized ferrite sections could be incorporated in the substrate of the slotline. Because of practical considerations dictated by size and magnetic requirements, it appears that either solution is not feasible. It was therefore concluded that the asymmetrical slotline was not the optimum configuration for achieving a practical nonreciprocal latching ferrite phase shifter.

Figure 4 is a sketch of the symmetrical or sandwich slotline transmission system. This configuration has also been analyzed by Mariani et al[2] as another type of slotline. The sandwich slotline is the dual of standard stripline. This type of slotline is of interest because it exhibits a field configuration ideally suited for producing symmetrical elliptically polarized H-fields. In addition the dimensions and spacing of the H-field regions are reasonable in terms of fabricating physically realizable ferrite configurations for producing nonreciprocal phase. It is reasonable to expect that λ'/λ would be smaller in the sandwich configuration than in the asymmetrical configuration. In addition, a composite dielectric-ferrite sandwich can be made of reasonably dimensioned materials. Hence the sandwich slotline appears to be very attractive for producing a practical nonreciprocal ferrite phase shifter.

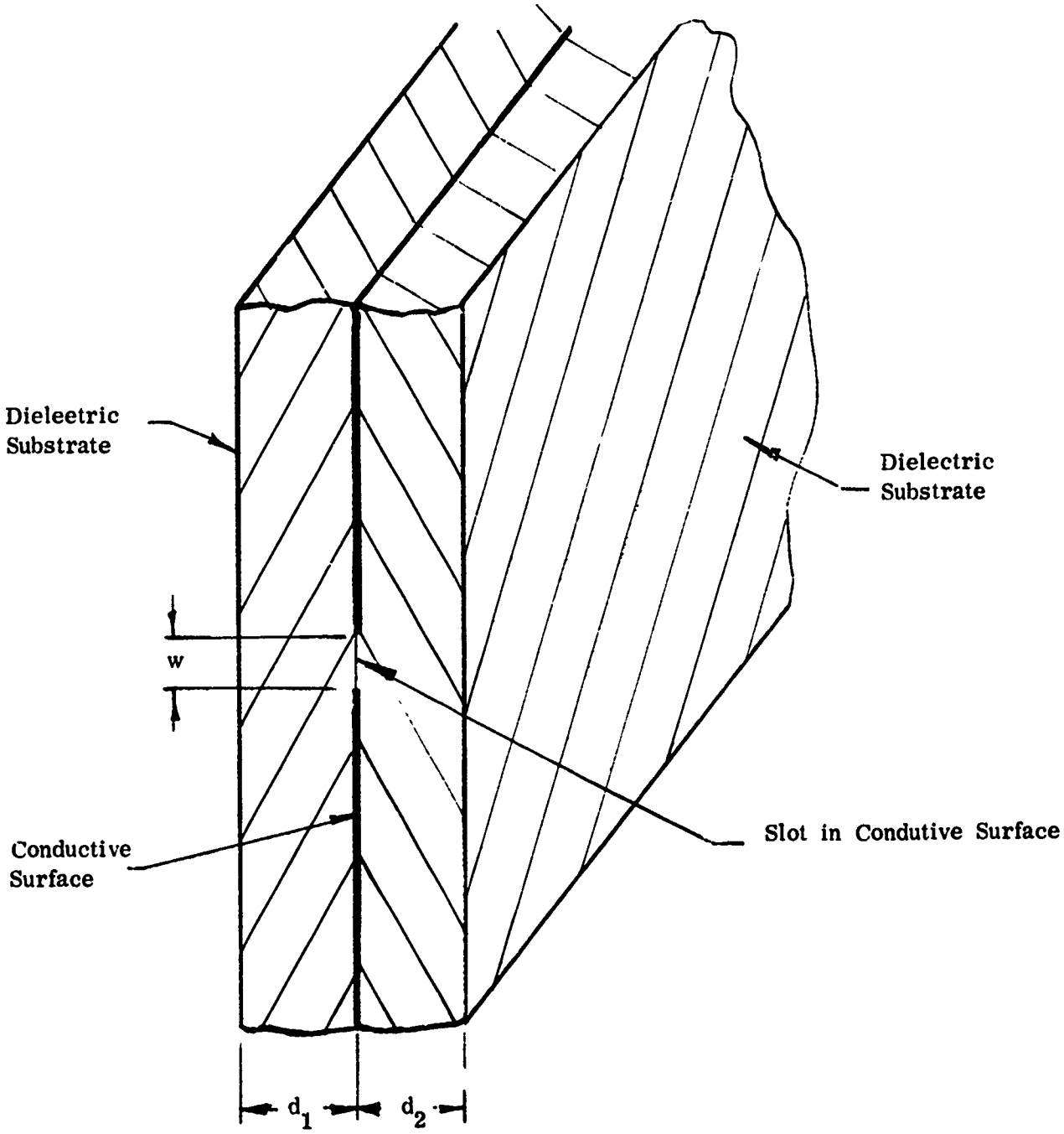

Figure 4 - Sandwich Slotline Configuration

The field configuration for the sandwich slotline is shown in Figure 5. Once again it is seen that there is a bunching of the fields in the vicinity of the slot and that an elliptically polarized H-field region exists in each of the two separate dielectric substrates. The sense of each of these two elliptically polarized H field regions is opposite to one another and it is now clear that if two ferrite substrates are used and are magnetized in opposite directions an efficient nonreciprocal phase shifter may be produced.

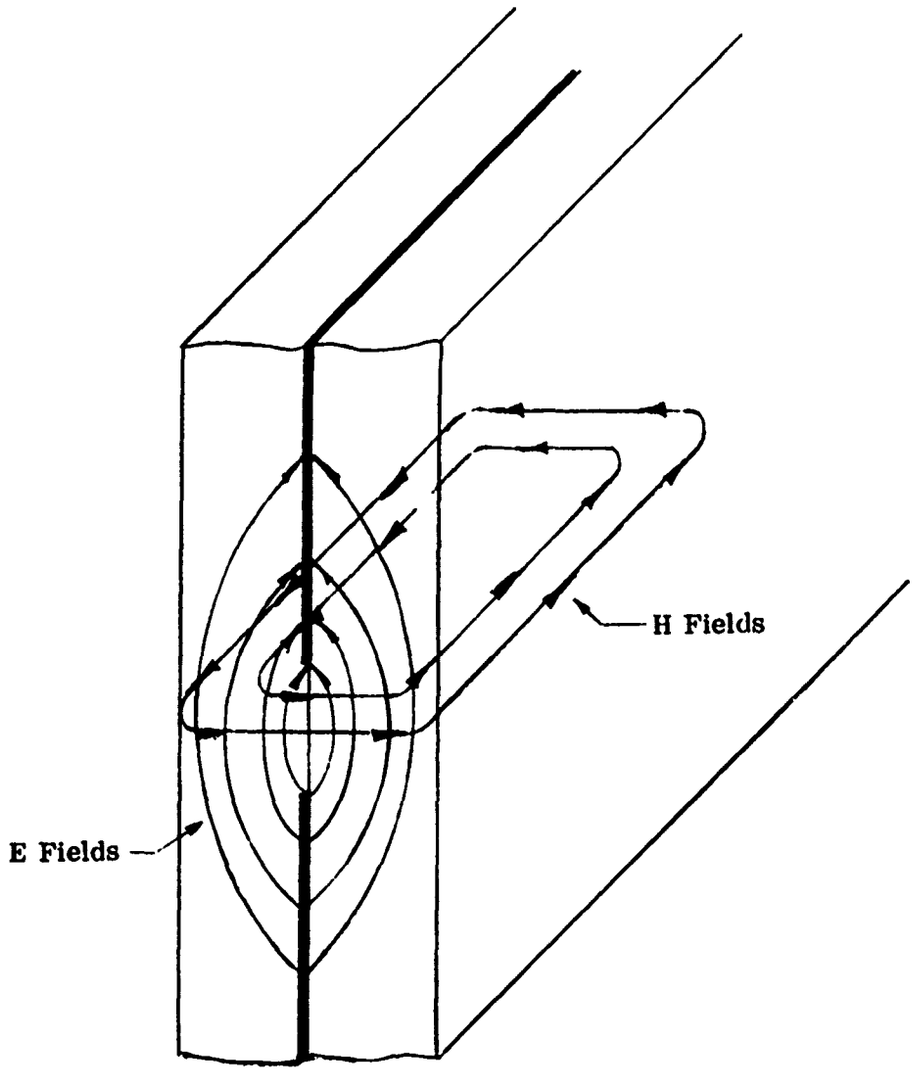

Figure 5 - Field Configuration for the Sandwich Slotline Configuration

III SLOTLINE FERRITE PHASE SHIFTER CONFIGURATIONS

A. Asymmetrical Phase Shifter

As mentioned above, an asymmetrical slotline ferrite phase shifter can be constructed to yield nonreciprocal phase shift. Figure 6 is a cross-sectional view of such a device. A return magnetic path is provided across the slot to latch the ferrite into one of its remnant states. By pulsing the driver wire the magnetic state may be controlled. As shown, the return magnetic path is placed away from the conductive surface of the slotline. The "U" section is used to make a composite toroid consisting of the "U" and the ferrite substrate. An alternative configuration to that shown in Figure 6 can be realized by placing the U channel on the conductor side of the asymmetrical slotline This latter configuration would minimize the RF interaction of the U section with the propagating wave, since the fields on the conductor side of the substrate are considerably reduced in magnitude. However, this configuration requires that magnetization be accomplished through the conducting surfaces of the slotline. Due to the eddy currents set up in the conductor during magnetization changes, more driver power would be required as well as additional time to switch phase. Hence, of the two configurations the former is preferable. In any case, the RF field configuration in the ferrite substrate is such that optimum nonreciprocal phase performance does <u>not</u> occur. The reason for this was discussed earlier and is caused by the two senses of elliptically polarized H fields that may

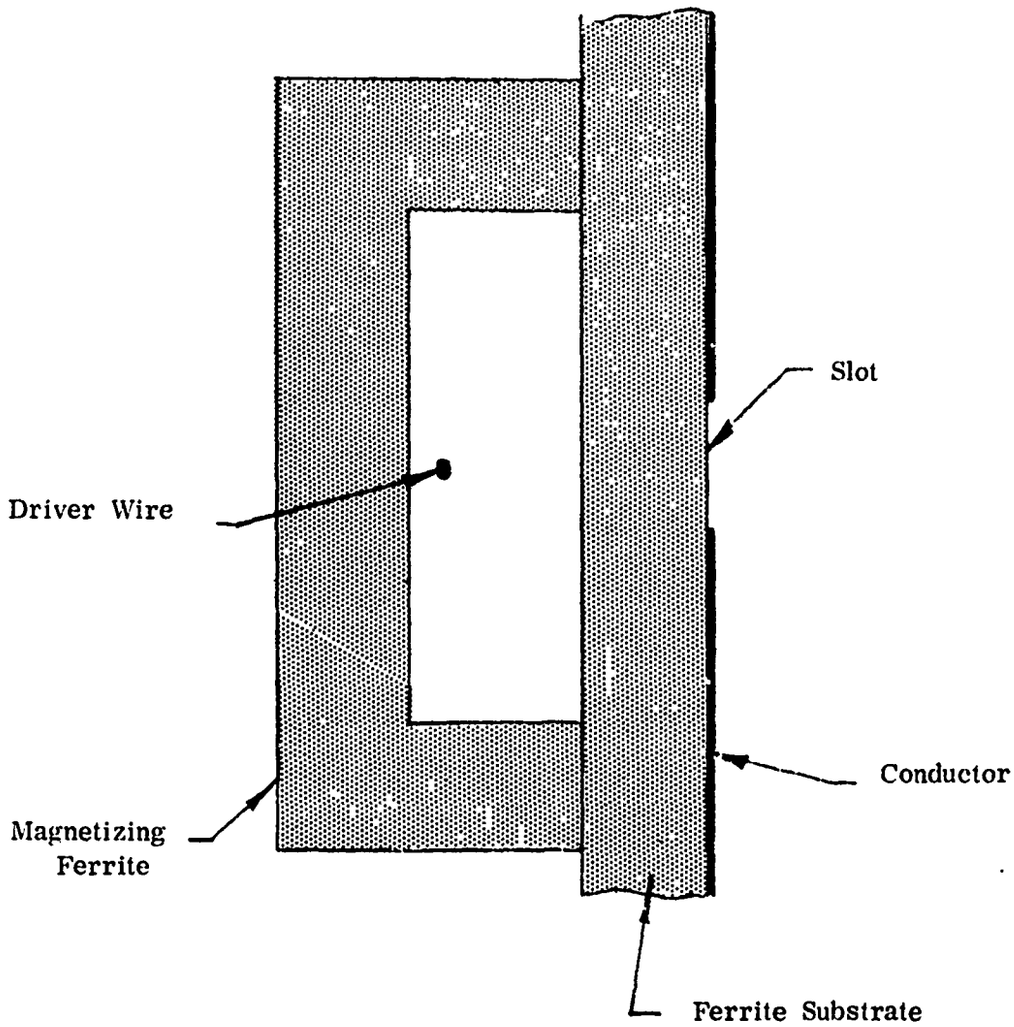

Figure 6 - Cross Section of Asymmetrical Slotline
Ferrite Phase Shifter

exist in the ferrite substrate.

B. Sandwich Phase Shifter Configuration

The sandwich phase shifter configuration appears to offer the optimum cross section for achieving low loss, nonreciprocal phase shifter performance. This reasoning is based on the fact that two oppositely rotating elliptically polarized H-field regions exist in this configuration. A practical ferrite configuration can be provided which will substantially interact with each of these circularly polarized field regions.

Figure 7 is a cross sectional view of a sandwich slotline ferrite phase shifter utilizing a single ferrite toroid. Note that the magnetic bias flux lines are directed in opposite directions on each side of the conductive surfaces. It is exactly this type of magnetic bias that was indicated to be optimum in the previous section. Practical ferrite toroids can be built whose dimensions would yield acceptable slotline impedance levels. In addition, such toroids have been used extensively in waveguide nonreciprocal latching ferrite phase shifters. Sufficient slot height is molded in the ferrite toroid to enable the design of a practical slotline with minimum fringing fields at the top and bottom of the line. A driver wire is located at the top or bottom of the ferrite toroid to produce phase changes. This driver wire does not interfere and/or interact with the propagating RF wave in this position.

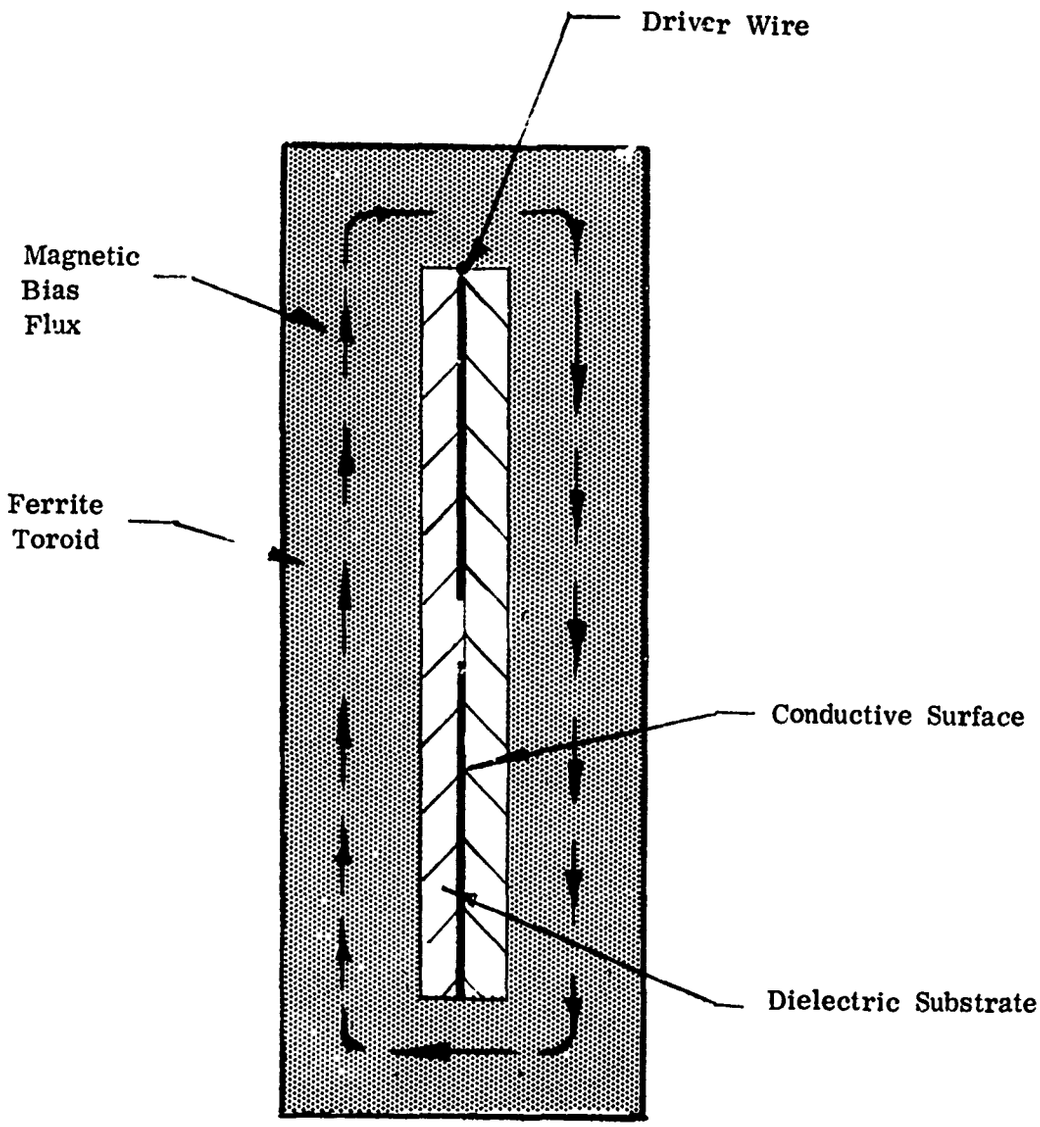

Figure 7 - Cross Section of Single Toroid Sandwich Slot Line Ferrite Phase Shifter

In addition to the single toroid device, a dual single toroid sandwich slotline ferrite phase shifter can be constructed. Figure 8 is a cross sectional view of such a device. Instead of using one toroid, two toroids are used, one for each side of the slotline sandwich. As indicated, the optimum position for the ferrite toroids would be at the outer surface of the sandwich slotline. This is because the elliptically polarized H fields are in those regions. The driver wires shown in Figure 8 would be connected in series so as to produce the direction of magnetic bias, as indicated in the figure. Note that both ferrite toroids are biased to yield counterclockwise remnant fields, but since the left side of one toroid and the right side of the other toroid are within the sandwich configuration, the interacting portions of the toroids are oppositely biased. This configuration should also yield good phase shifter performance. However, it is obvious that since two ferrite toroids and relatively sophisticated dielectric machining is required, that this configuration would be more expensive than the previously discussed sandwich slotline phase shifter. Hence this device was not studied during the course of this program.

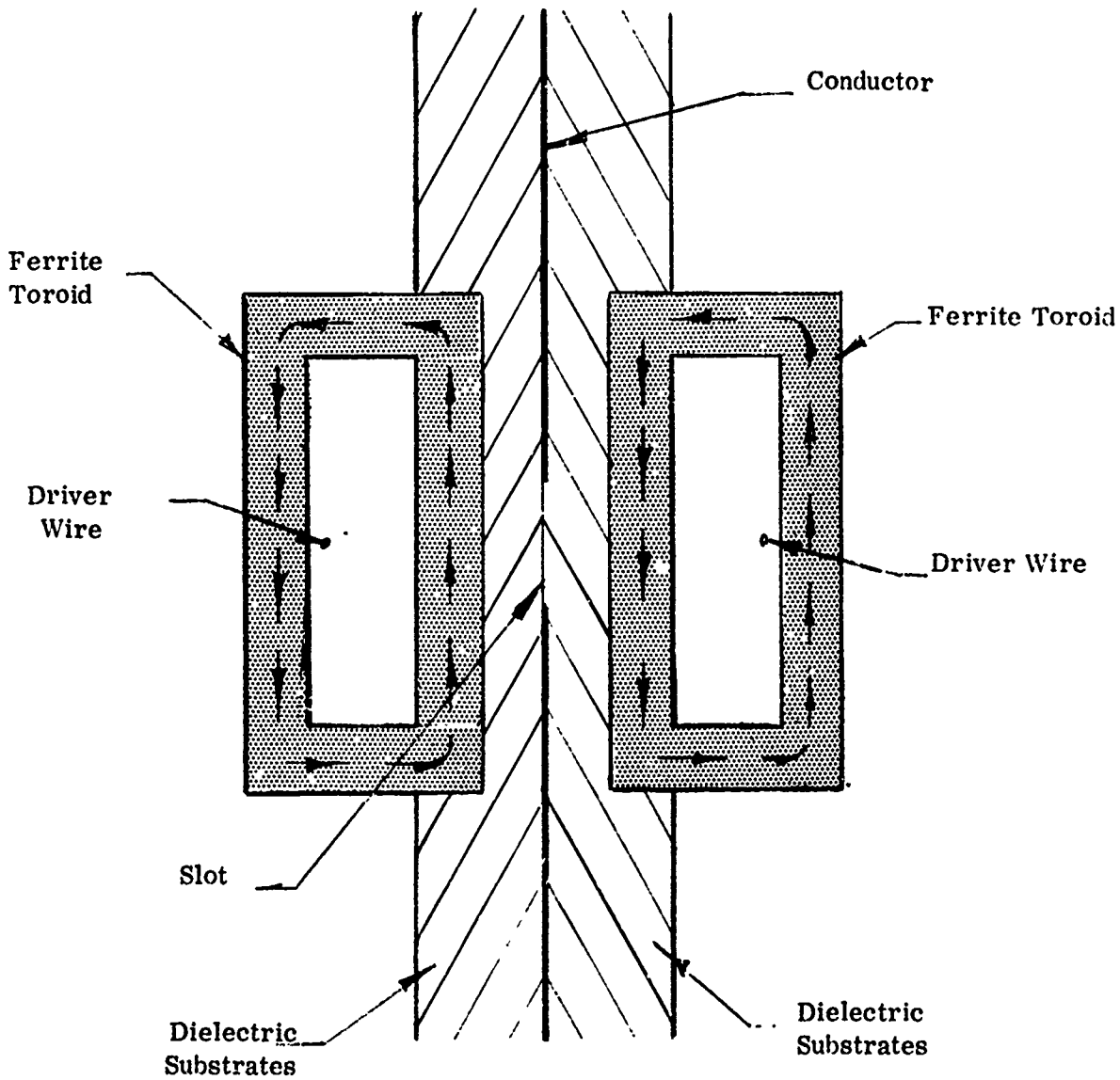

Figure 8 - Cross-Section of Dual Single Toroid Sandwich Slotline Ferrite Phase Shifter

IV COMPUTER ANALYSES

A. Phase and Impedance Calculations

A theoretical study was undertaken to determine the expected differential phase of a slotline ferrite phase shifte as a function of device configuration and material characteristics. The model used is shown in Figure 9. Figure 9a is a sketch of the phase shifter cross section. Note that it is a two layer or double sandwich device. In order to analyze this configuration it was necessary to extend Cohn's original model to the double sandwich model which is done by adding a second "transmission line" section to the transverse resonance analysis. Figure 9b is the equivalent circuit used to generate the transverse resonance model. The resultant transcendental equation using this model is given in Figure 10. Each of the symbols is defined in the figure.

This equation was programmed and the propagation characteristics calculated by the cognizant technical personnel at ECOM. Figures 11a, 11b and 11c illustrate some of this data. Also indicated on the figures are variations in the scalar permeability of the "ferrite" substrates. Variations of scalar permeability were used since incorporation of the tensor permeability into the transverse resonance equation is virtually impossible.

The variations in scalar permeability for this model indicate that differential phase shift could be achieved from a slotline device if the tensor permeability varied over similar ranges. A knowledge of the actual RF magnetic field configuration would enable one to locate the region in the ferrite dielectric

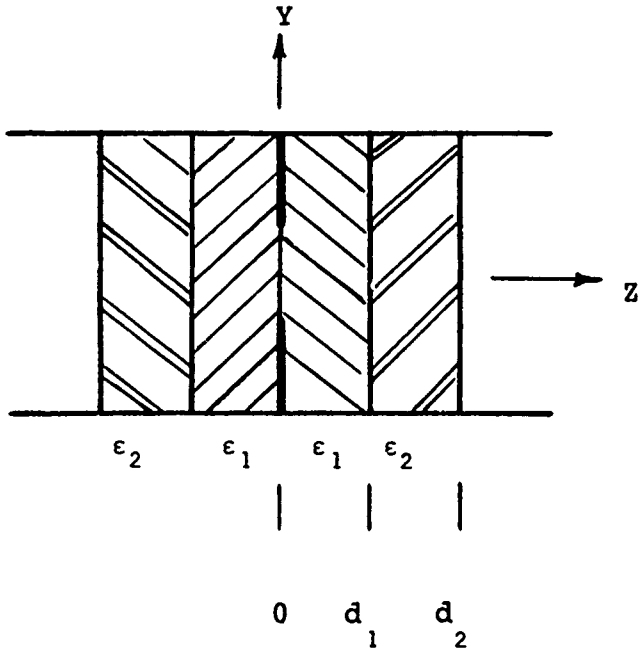

(a) Double Sandwich Phase Shifter Cross-Section

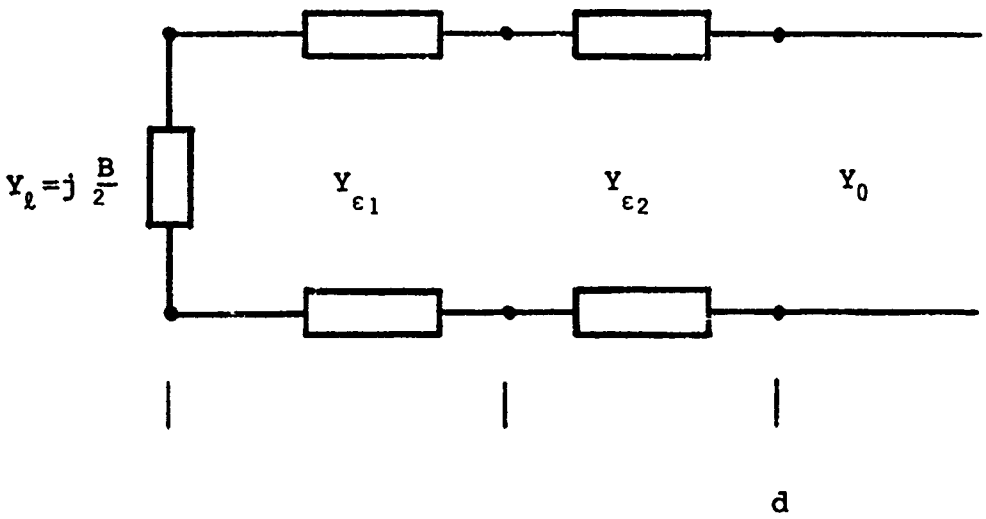

(b) Equivalent Circuit

Figure 9 - Double Sandwich Slotline Phase Shifter Cross-Section and Equivalent Circuit Model

$$\eta B_t = \frac{au}{b} \tan\left\{\frac{\pi u d_1}{ap} + \tan^{-1}\left[\frac{h}{\mu_2 u}\tan\left[\frac{\pi h}{ap}(d-d_1) - \tan^{-1}\frac{v\mu_2}{h}\right]\right]\right\}$$

$$+ \frac{u^2}{p}\ln\frac{2}{\pi\delta} + \frac{1}{p}\sum_{n=1,2\ldots}\left[\frac{\varepsilon_1 \tanh A - p^2 F_{n1}^2 \coth C}{\left[1 + \left(\frac{b}{2an}\right)^2\right]F_{n1}} - u^2\right]\frac{\sin^2 \pi n\delta}{n(\pi n\delta)^2}$$

where:

$$A = \gamma_{n1} d_1 + \tanh^{-1}\left\{\frac{\varepsilon_2 \gamma_{n1}}{\varepsilon_1 \gamma_{n2}} \tanh\left[\gamma_{n2}(d-d_1) + \tanh^{-1}\frac{\gamma_{n2}}{\varepsilon_2 \gamma_n}\right]\right\}$$

$$C = \gamma_{n1} d_1 + \coth^{-1}\left\{\frac{\gamma_{n2}}{\mu_2 \gamma_{n1}} \coth\left[\gamma_{n2}(d-d_1) + \coth^{-1}\frac{\gamma_n \mu_2}{\gamma_{n2}}\right]\right\}$$

$$\gamma_n = \frac{2\pi n}{b}\sqrt{1+\left(\frac{bv}{2anp}\right)^2} \; ; \quad \gamma_{n1} = \frac{2\pi n}{b}\sqrt{1-\left(\frac{bu}{2anp}\right)^2} \; ; \quad \gamma_{n2} = \frac{2\pi n}{b}\sqrt{1-\left(\frac{bh}{2anp}\right)^2}$$

$$u = \frac{\lambda}{\lambda_{g1}} = \sqrt{\varepsilon_1 - p^2} \qquad p = \frac{\lambda}{2a} \qquad v = \sqrt{p^2 - 1}$$

$$F_{n1} = \frac{b\,\gamma_{n1}}{2\pi n} \qquad h = \sqrt{\mu_2 \varepsilon_2 - p^2} \qquad \delta = \frac{w}{b}$$

Figure 10 - Transverse Resonance Equation for Double Sandwich Slotline

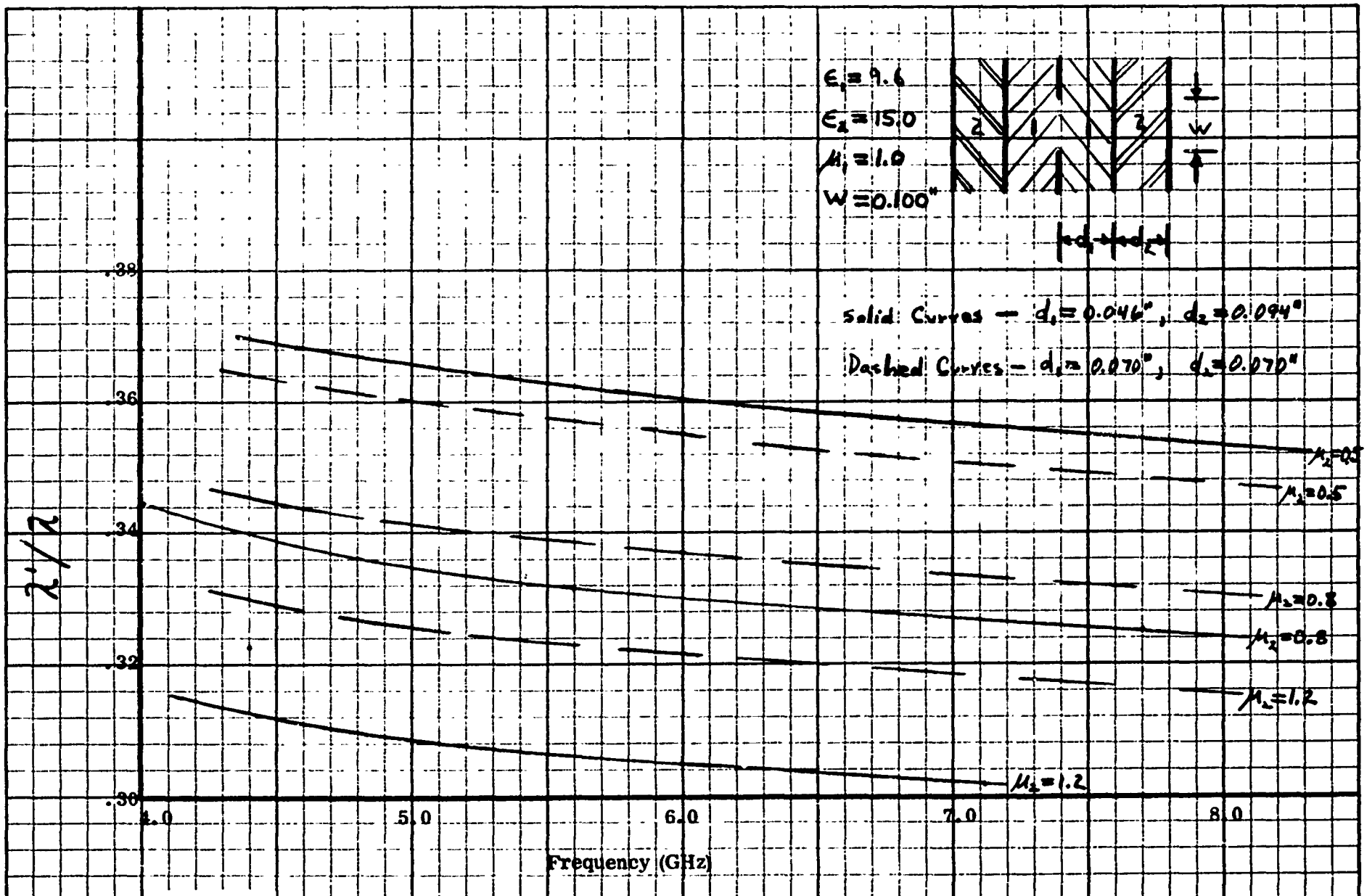

Figure 11a - Normalized Guide Wavelength vs. Frequency

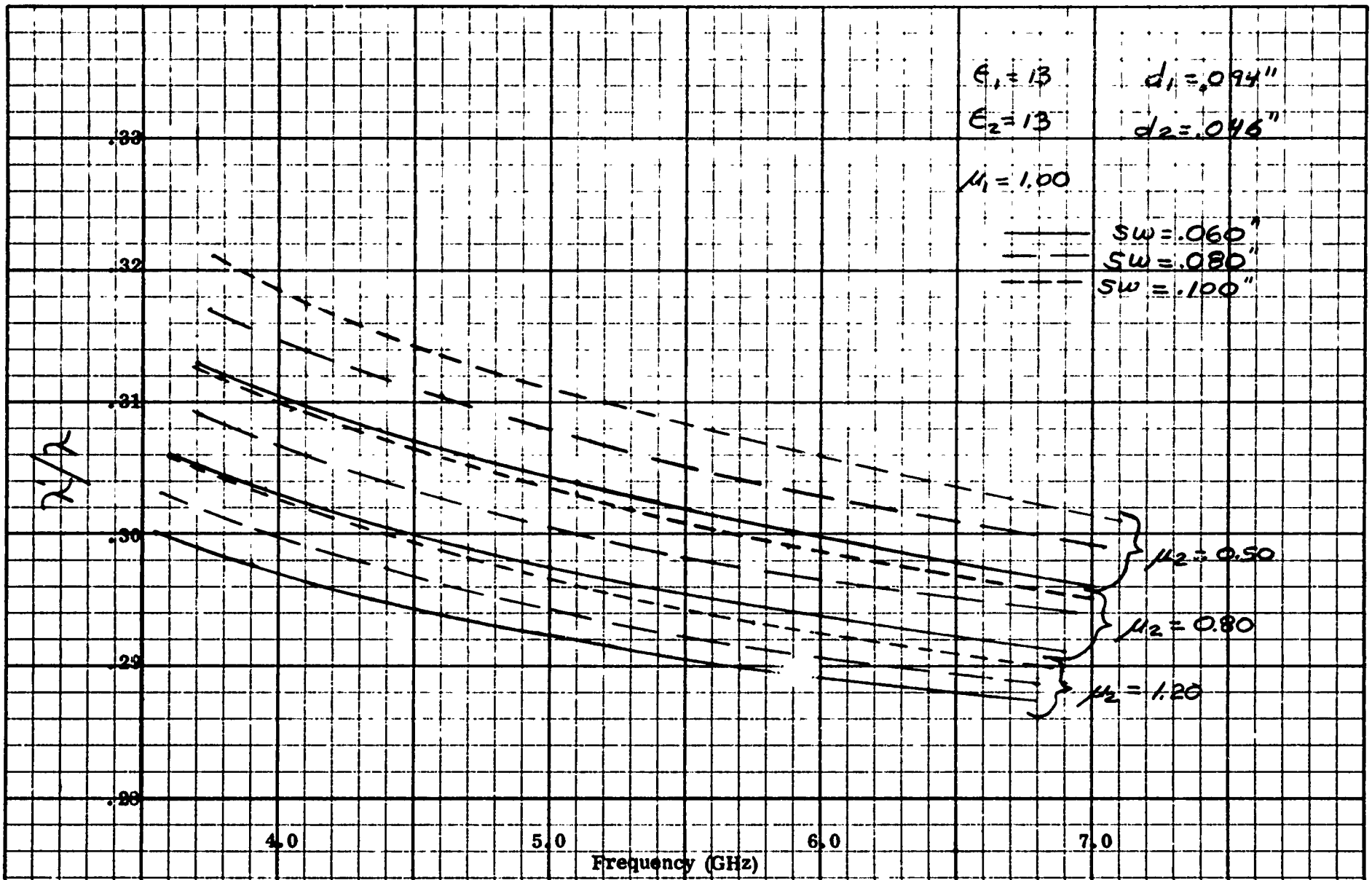

Figure 11b - Normalized Guide Wavelength vs. Frequency

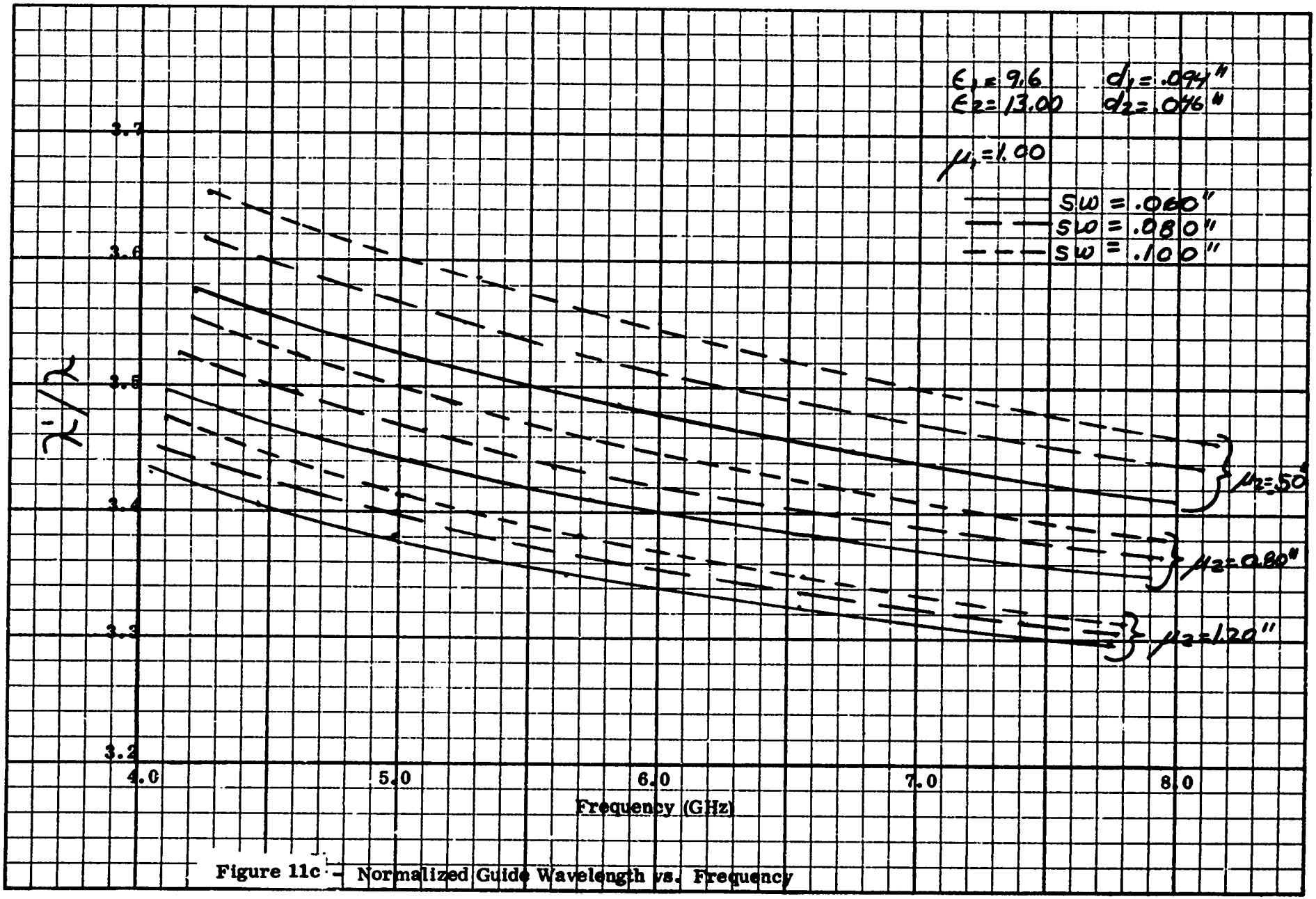

Figure 11c – Normalized Guide Wavelength vs. Frequency

sandwich structure where the most nonreciprocal interaction would take place. Consequently analysis of the microwave magnetic field configuration to determine the extent of the elliptically polarized fields in the ferrite-dielectric sandwich slotline phase shifter configuration was performed by S. B. Cohn under the SRI contract DAAB07-70-0044. This data is presented below.

B. RF H Field Calculations

The RF H field configuration for the dual sandwich slotline phase shifter was calculated in order to determine the level of ellipticity in the ferrite section of the device.[3] These calculations were performed for a wide range of dielectric substrate widths and permittivity as well as a complete range of ferrite widths. The permittivity of the ferrite was always assumed to be 13. The relative permeabilities of the dielectric substrates used were 9.6, 13.0, and 30.0. The thicknesses of the dielectric substrates used were 0.020, 0.030, and 0.040 inches. The thicknesses of the ferrite substrates were 0.020, 0.060, and 0.100 inches. All calculations were made at an assumed frequency of 6.0 GHz. The resultant field strengths were derived in units of ampere turns per meter (R.M.S.) based on a power flow of one watt.

The RF H fields were plotted in the transverse direction along the plane bisecting the slot located in the center of the sandwich configuration. Calculations were made from 0.015 inches out to 0.300 inches to the right of the conducting plane. A slot width of 0.040 inches was used for all calculations. Twenty-seven different sets of data for the two perpendicular H field components

were calculated. Some of this data is plotted in Figures 12 thru 16. Each curve indicates the physical configuration as well as the material parameters used for calculating the plotted data.

It is interesting to note that considerable ellipticity is achieved for those configurations that use high permittivity as well as thin substrates as indicated in Figures 13, 14, and 15. Figure 16 is of interest in that a reversal in the sense of ellipticity can be achieved if the sandwich structure is made too wide. This figure shows that the longitudal H field component experiences a sign reversal for distances less than 0.025 inches from the center plane of the device. Hence cancelling effects can be obtained even in the double sandwich configuration as in the single substrate slotline discussed in an earlier section.

Based on the data generated from these calculations a series of slotline phase shifters was fabricated for experimental evaluation. Data obtained from these devices is presented in a later section of this report.

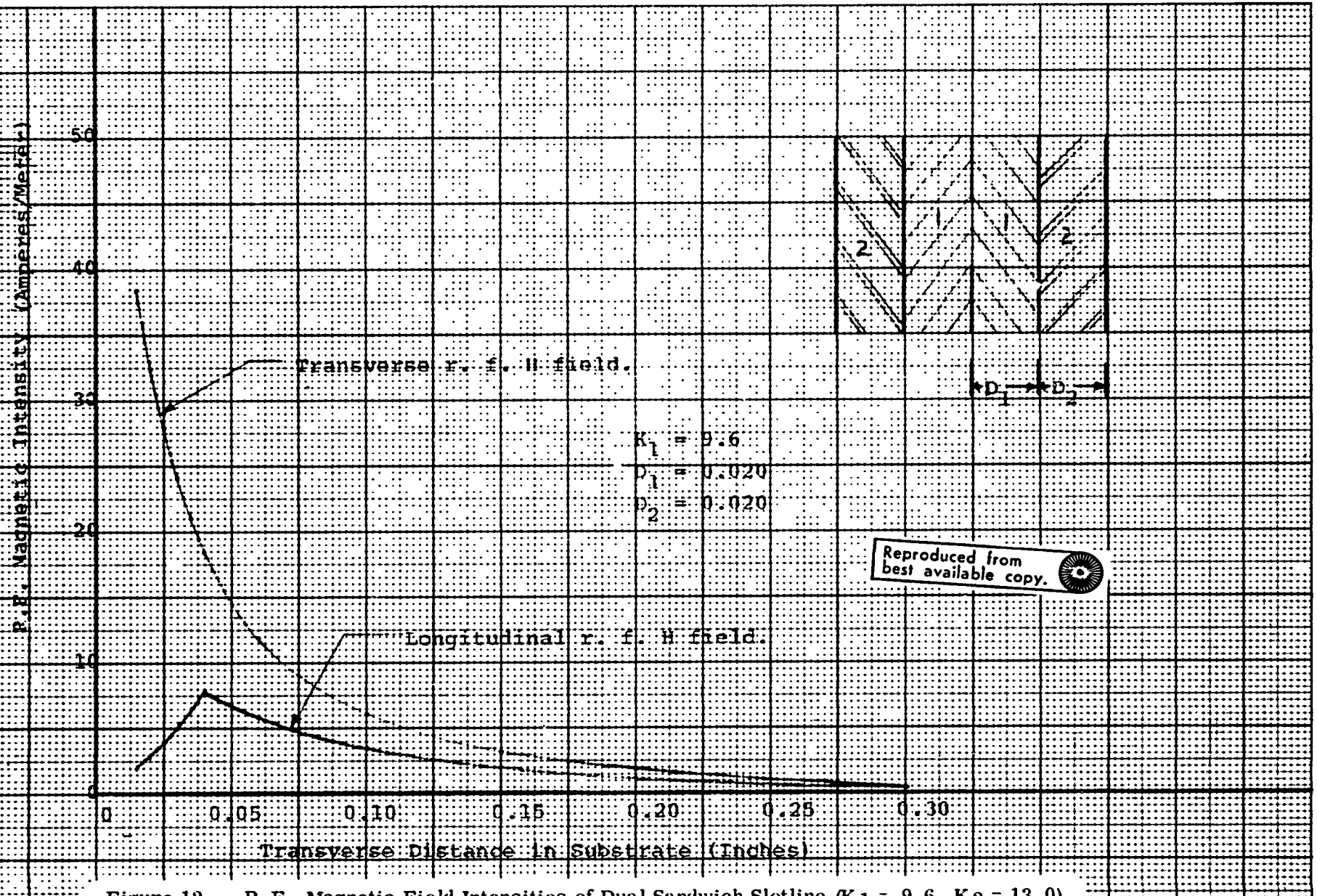

Reproduced from best available copy.

Figure 12 - R.F. Magnetic Field Intensities of Dual Sandwich Slotline (K_1 = 9.6, K_2 = 13.0)

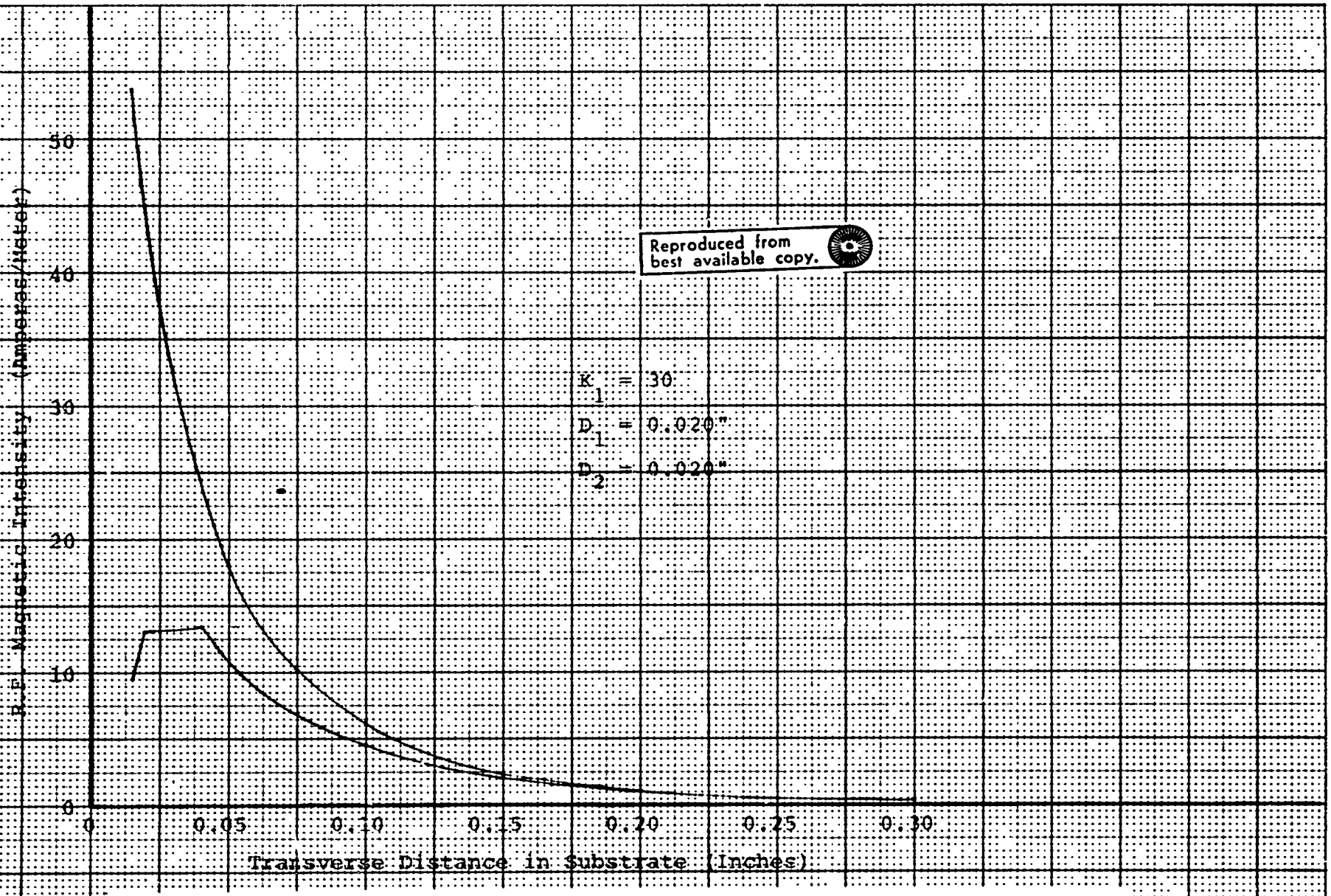

Reproduced from best available copy.

Figure 13 - R.F. Magnetic Field Intensities of Dual Sandwich Slotline (K_1 = 30, K_2 = 13.0)

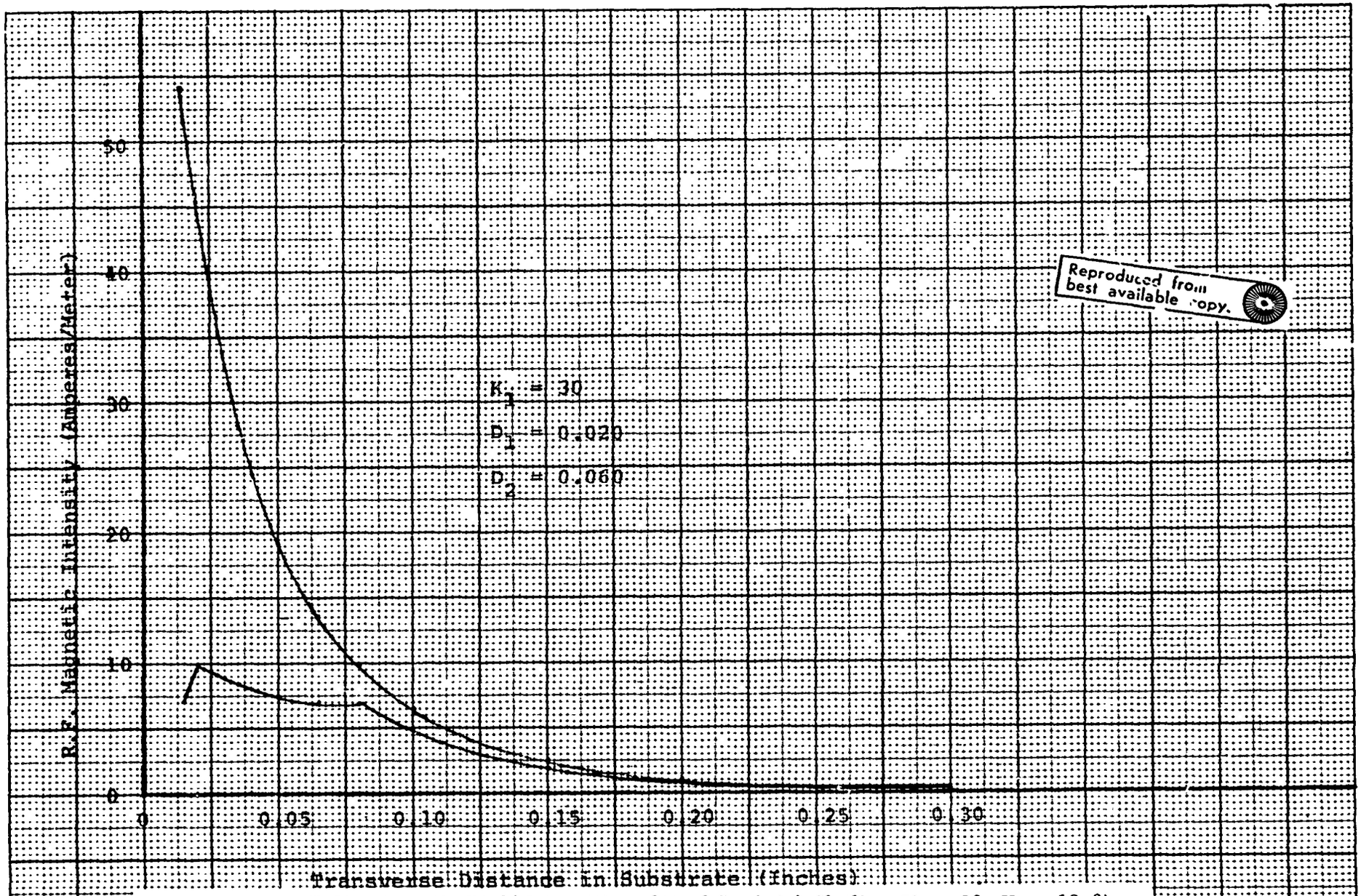

Reproduced from best available copy.

Figure 14 - R.F. Magnetic Field Intensities of Dual Sandwich Slotline (K_1 = 30, K_2 = 13.0)

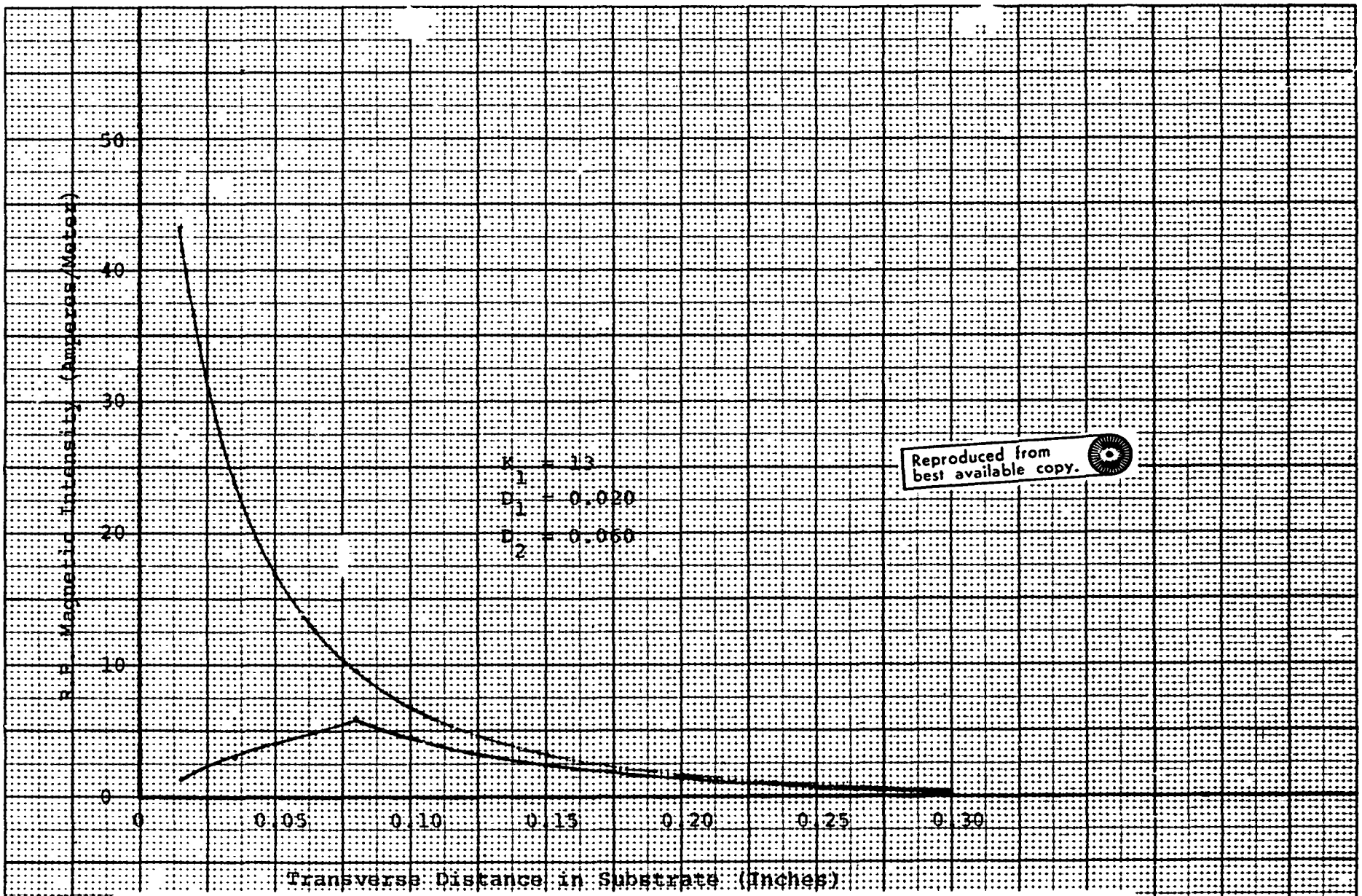

Reproduced from best available copy.

Figure 15 - R.F. Magnetic Field Intensities of Dual Sandwich Slotline ($K_1 = 13$, $K_2 = 13.0$)

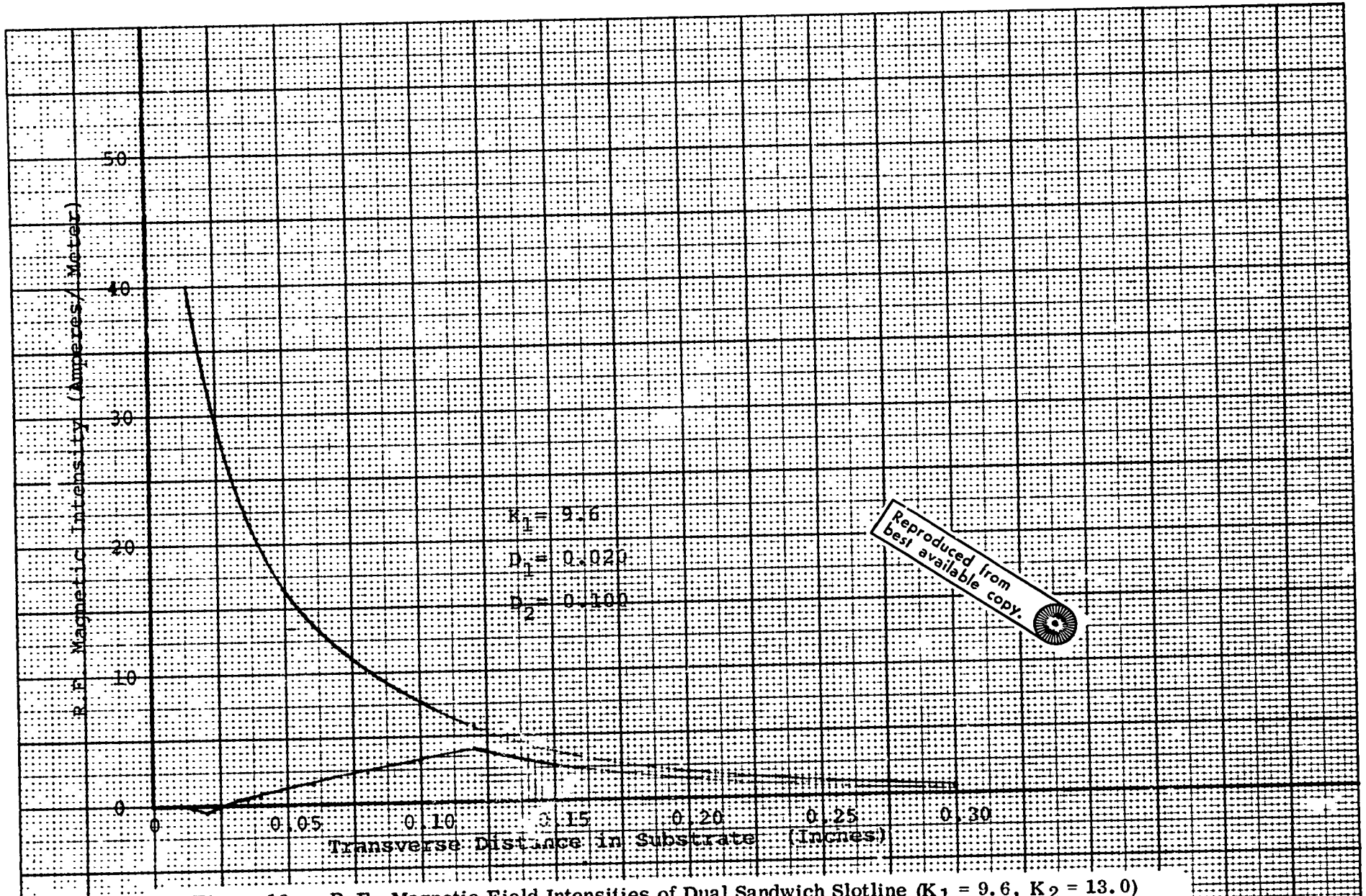

Reproduced from best available copy.

Figure 16 - R.F. Magnetic Field Intensities of Dual Sandwich Slotline ($K_1 = 9.6$, $K_2 = 13.0$)

V DRIVER CHARACTERISTICS

Digital latching driver circuits were originally specified for driving the slotline devices under development. These circuits are relatively simple and have been in use for many years. The digital device operates between the two remnant points of the ferrite toroids used in the phase shifter. In general the characteristics of ferrite materials are temperature sensitive. Hence strict digital operation of latching ferrite phase shifters will produce digital phase shifts which are also temperature dependent. There are however several temperature compensated materials which offer relatively good performance over wide temperature ranges. Specifically these materials are Trans Tech G-1001 and G-1002 gadolinium substituted yttrium iron garnets. They have relatively flat remnant magnetization vs. temperature characteristics. Digital operation using these materials is illustrated in Figure 17a. The two phase states of a toroid, when used in a phase shifter configuration, are the $-B_r$ and $+B_r$ flux states. However even with the above two temperature compensated garnets, the B-H characteristics of these materials would not produce 4-bit accuracy over standard mil-spec temperature ranges. It was therefore concluded that the flux transfer driver technique would be used to drive the slotline phase shifters for this program.

Figure 17b illustrates the B-H loop of a typical microwave ferrite or garnet, and how intermediate phase states are achieved. One toroid rather than four toroids is used in a flux transfer device, where the single toroid is

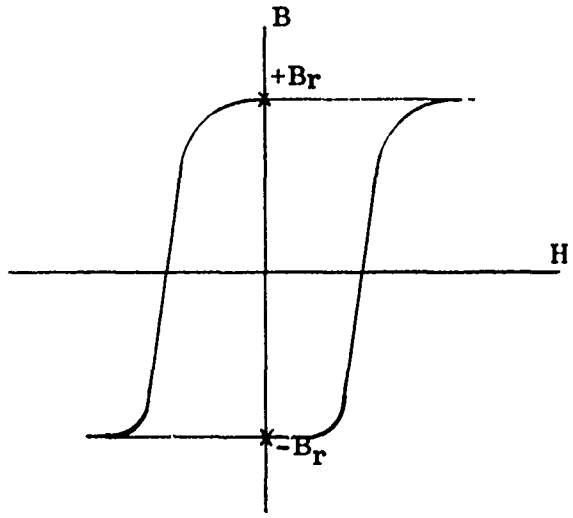

a. Digital Operation

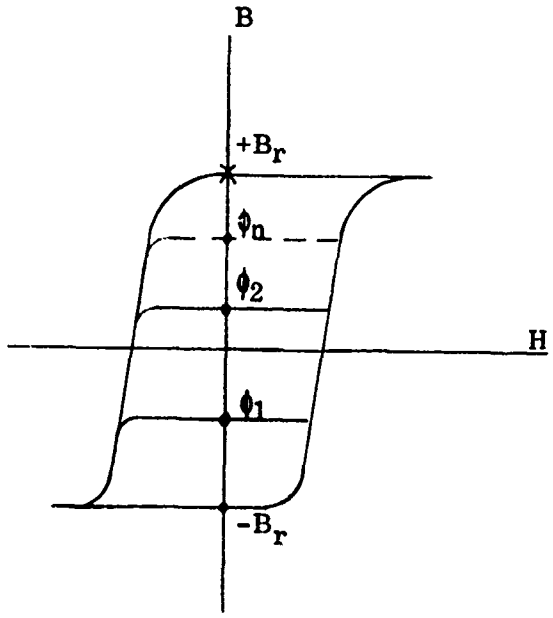

b. Flux Transfer Operation

Figure 17 - B-H Loops for Digital and Flux Transfer Latching Ferrite Phase Shifter Operation

capable of producing more than 360° of differential phase shift at the most severe temperature. The flux transfer technique has been used quite successfully for many ferrite phase shifter applications and has proven to be the simplest technique for achieving reliable, precision phase changes in phased arrays. The theory of operation of the flux transfer technique is well known and will not be repeated here. A major advantage of this technique is its intrinsic temperature compensation. This is due to the fact that differential phase shift produced by nonreciprocal phase shifters is proportional to latched magnetic flux changes. By designing the phase shifter such that flux changes at any temperature level yield more than 360° of differential phase shift, flux transfer operation will automatically produce temperature insensitive operation. Another advantage of the flux transfer technique is that it enables insertion phase compensation. Such compensation is required due to variations in the magnetic and dielectric properties of ferrite materials. Appropriate zero phase adjustments may be made in the driver so that an array of such devices could be trimmed to yield zero interelement phase error when all the phase shifters are set to the same differential phase state. These zero phase adjustments can be made at the input of the driver circuit during initial test evaluations. Insertion phase compensation is not available in standard latching devices without making dimensional adjustments. This is quite tedious and costly.

Even if strict digital control signals are to be used for programming the phase of a flux transfer phase shifter, straightforward interfacing circuits

have been developed. Simple D/A converters are more than adequate for such purposes. Hence, the flux transfer driver technique is equally suitable for both analog and/or digital latching phase shifter action and will yield superior performance when compared with the straight digital latching device.

VI EXPERIMENTAL PROGRAM

An experimental program was undertaken to determine the effects of dielectric constant, ferrite width and insert width on the production of differential phase shift. Twenty seven different configurations were built and evaluated. Figure 18 is a sketch of the cross-section of a typical slot-line phase shifter. The dielectric width and ferrite width are illustrated in the sketch. Dielectric widths of 0.015, 0.020, 0.025, and 0.030 inches, and ferrite widths of 0.020, 0.040, and 0.060 were used. In addition the dielectric constant of the insert was varied and values of 9.6, 13.0, and 30 were used. This implies that 36 different configurations were measured. Unfortunately one insert was broken during the initial stages of the evaluation and only 33 different configurations were evaluated.

One set of measurements was made at 7.0 GHz, in which maximum differential phase shift versus dielectric width, d, was plotted where the dielectric constant of the insert was 30. This data is illustrated in Figure 19. Observe that for a given ferrite width, an optimum dielectric width of 0.020 inches exists. This was true for all ferrite widths measured. Figure 20 illustrates maximum differential phase shift versus ferrite width, f. This data was also taken at 7.0 GHz and the dielectric constant of the insert was again 30. Note that there is a definite increase in differential phase shift as ferrite width is increased from 0.020 inches to 0.040 inches and that in general this trend continues out to a ferrite width of 0.060 inches.

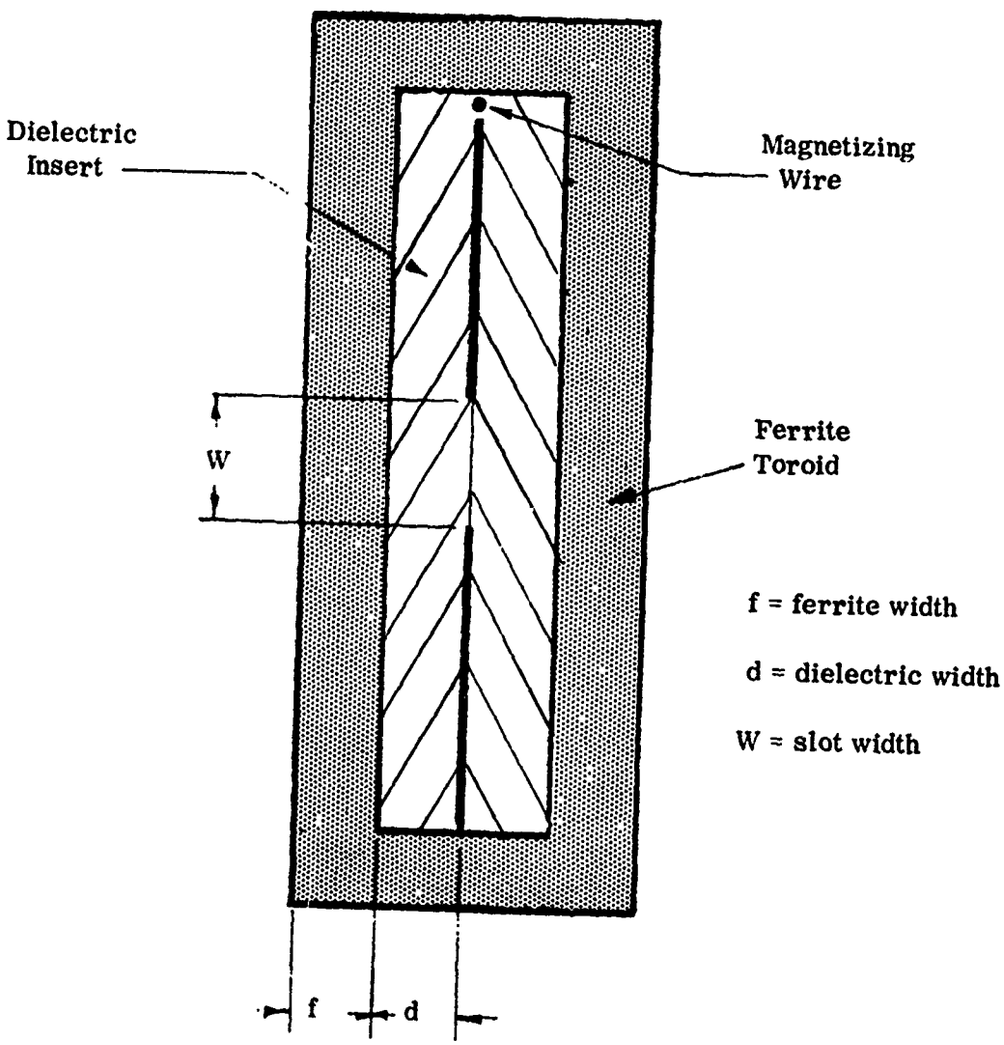

Figure 18 - Cross-Section of Sandwich Slotline Phase Shifter

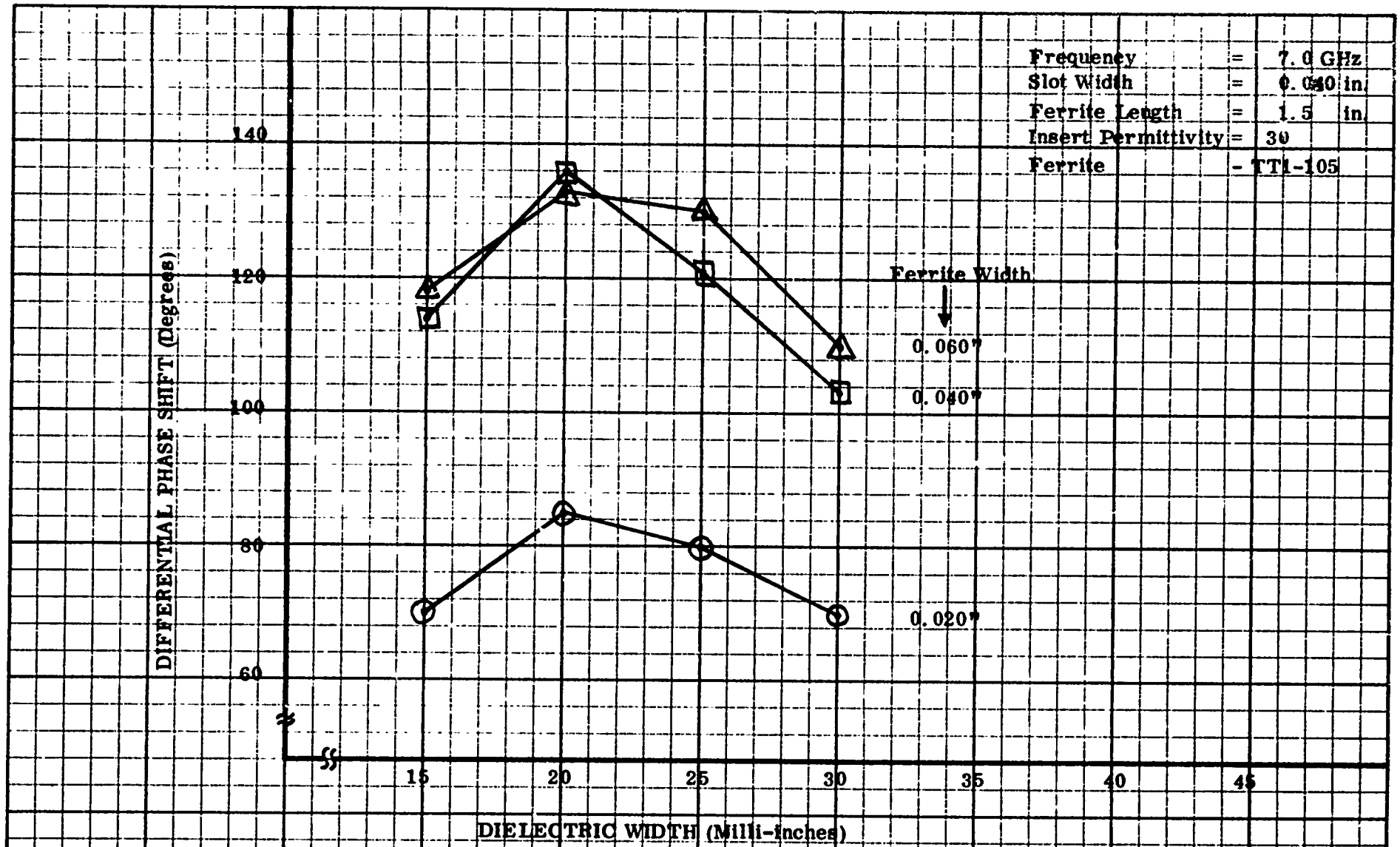

Figure 19 - Measured Differential Phase Shift vs Dielectric Width for Experimental Slotline Phase Shifters

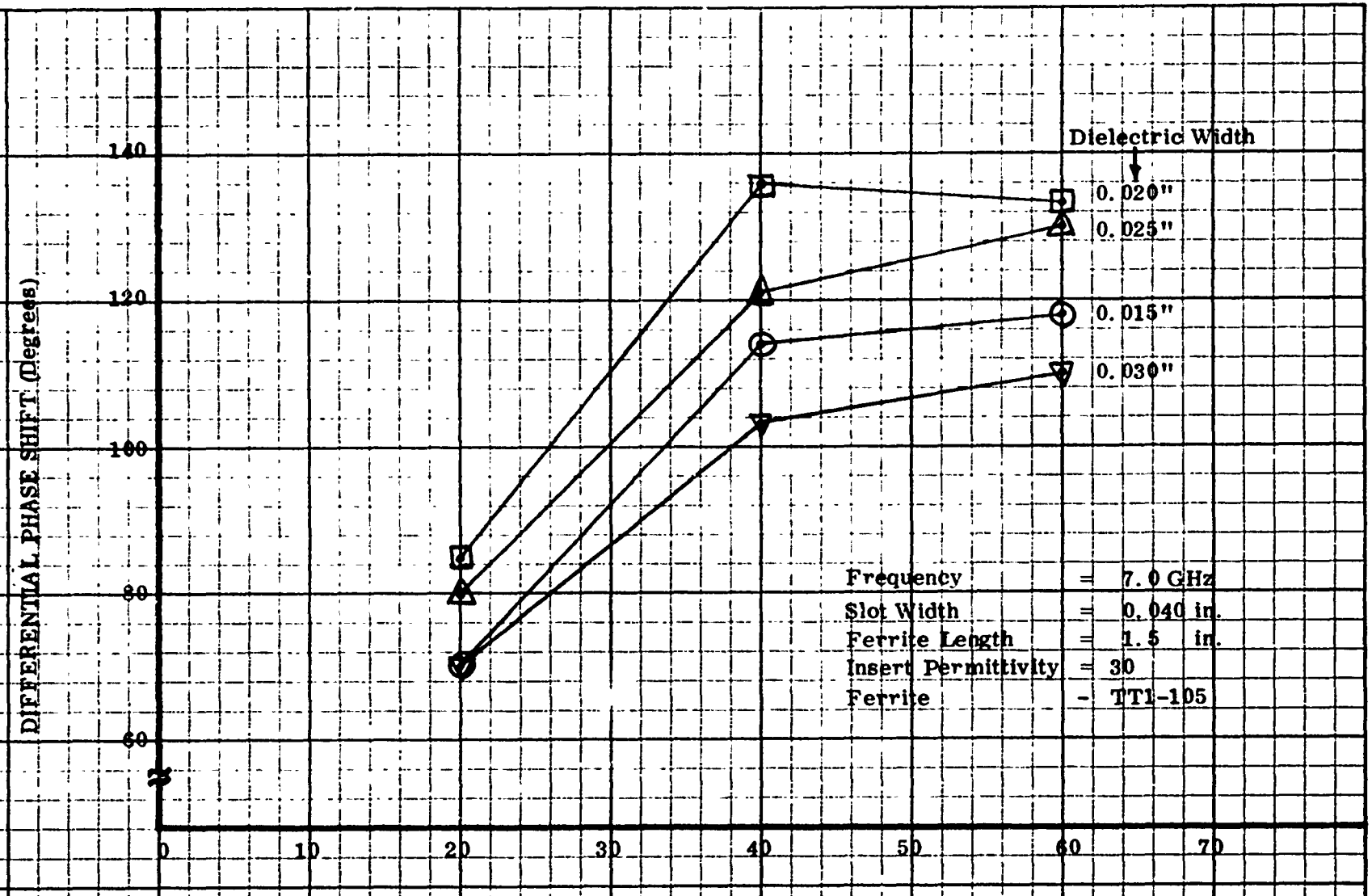

Figure 20 - Measured Differential Phase Shift vs Ferrite Width for Experimental Slotline Phase Shifters

It is interesting to note however that the curve associated with a dielectric width of 0.020 inches appears to peak for a ferrite width of 0.040 inches and actually exhibits less differential phase shift for a ferrite width of 0.060 inches. The data shown in Figures 19 and 20 are the same data points but are drawn separately so that the various effects on differential phase shift produced by the ferrite width and the dielectric width may be seen separately.

Maximum differential phase shift as a function of the relative permittivity of the dielectric insert is illustrated in Figure 21. This curve shows that there is almost a linear relationship of differential phase shift as a function of insert permittivity and that the higher the permittivity, the higher the resultant differential phase shift. These measurements were also made at 7.0 GHz and the ferrite and dielectric widths of three different physical configurations are indicated on the figure.

The highest phase shift per unit length measured during the course of this investigation was approximately 120 degrees per inch. The device that produced this phase, however, exhibited decreasing differential phase shift for increasing frequency, i.e., it had a negative differential phase shift vs. frequency response. A configuration which produced very broadband performance was constructed with the following dimensions: Slot Width - 0.040 inches; Ferrite Width - 0.040 inches; Dielectric Width - 0.020 inches.

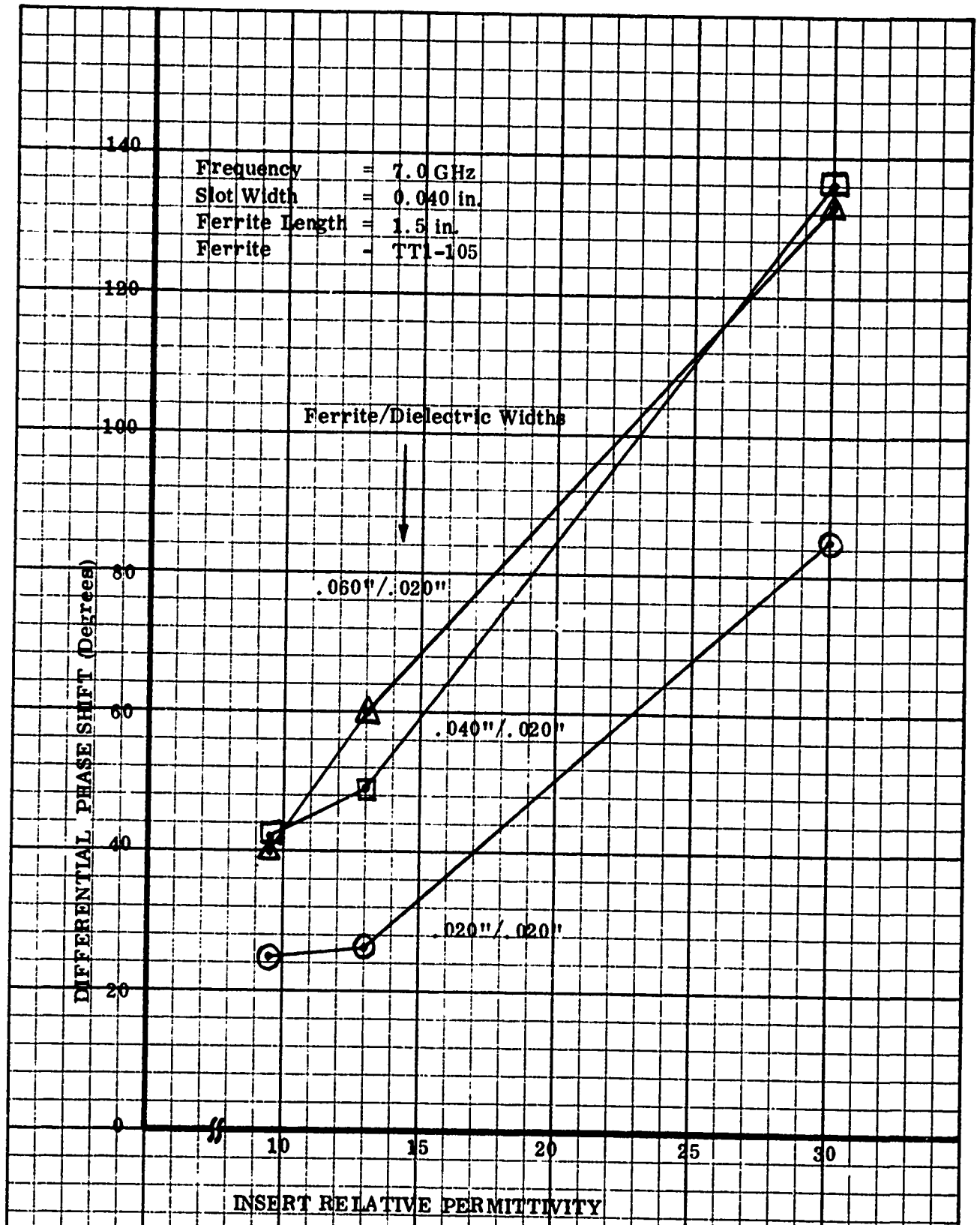

Figure 21 - Measured Differential Phase Shift vs Insert Relative Permittivity for Experimental Slotline Phase Shifters

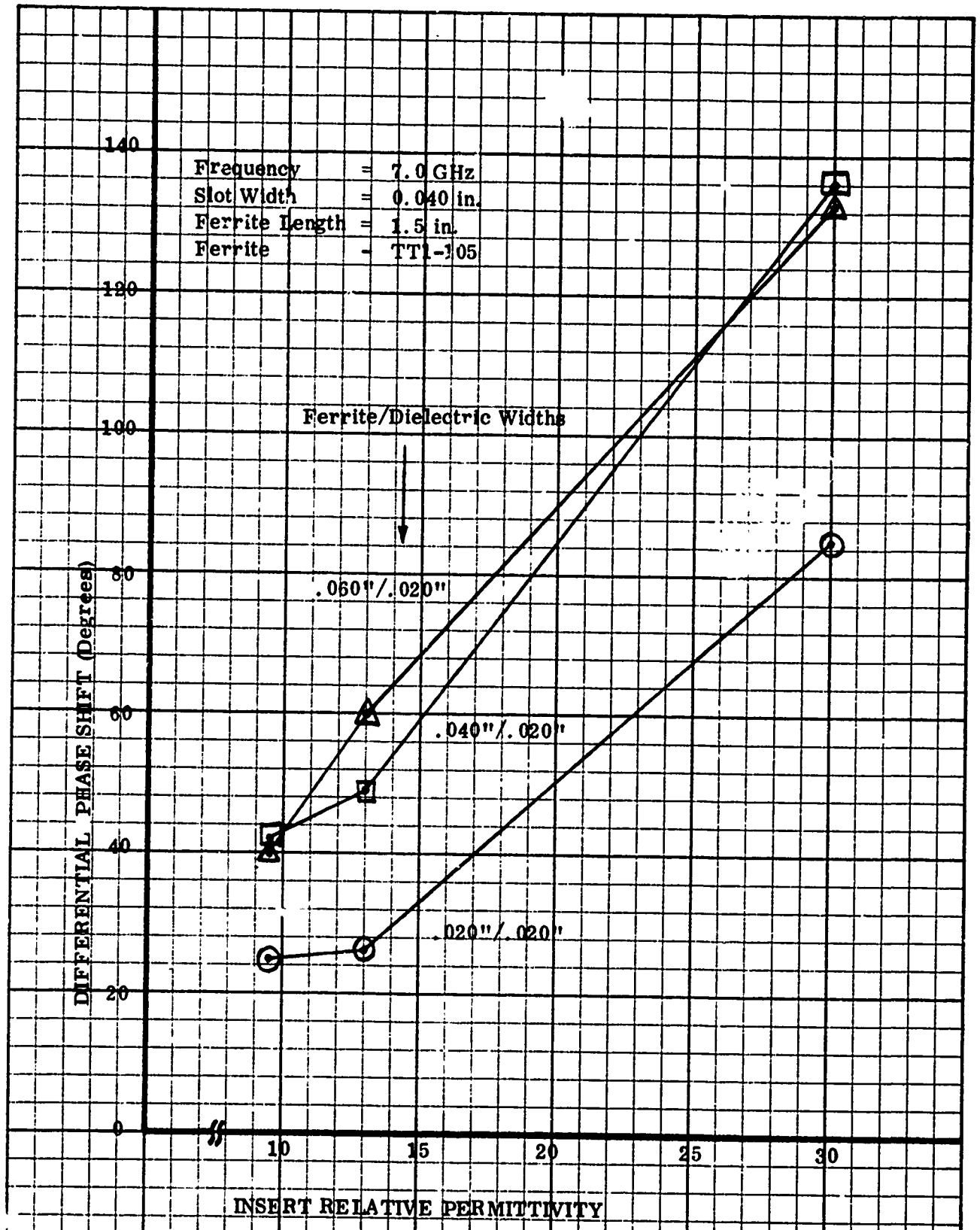

Figure 21 - Measured Differential Phase Shift vs Insert Relative Permittivity for Experimental Slotline Phase Shifters

This configuration produced about 90° per inch with virtually no change in differential phase shift from 5.0 to 10.0 GHz. The dielectric constant of the ceramic inserts used for this configuration is 30. The overall width of this particular device is 0.120 inches which is determined by adding twice the dielectric width and twice the ferrite width.

The phase versus frequency for this broadband device is illustrated in Figure 22. Note that from 4.0 to 10.0 GHz there was virtually no variation in differential phase shift. This broadband effect was mentioned in the Semi-Annual report but for a device which yielded only 20 degrees per inch. The large gyrations at the high end of the band shown in Figure 22 were caused by mismatches in the coax to slotline transitions at the input and output of the test fixture. In spite of these gyrations the flatness of the differential phase shift performance is still apparent.

The insertion loss data for this same configuration across the entire band is shown in Figure 23. It can be seen that approximately 2 db of loss was recorded across the band. Higher losses at the low end and high end of the band are attributed to the large mismatches produced by the coax to slotline transitions. Attempts were made to minimize these mismatches in the final experimental models by redesigning the transitions. As will be noted from the test results on the final experimental models (to be discussed in Section VII), the first alterations of the transitions did not yield the desired results.

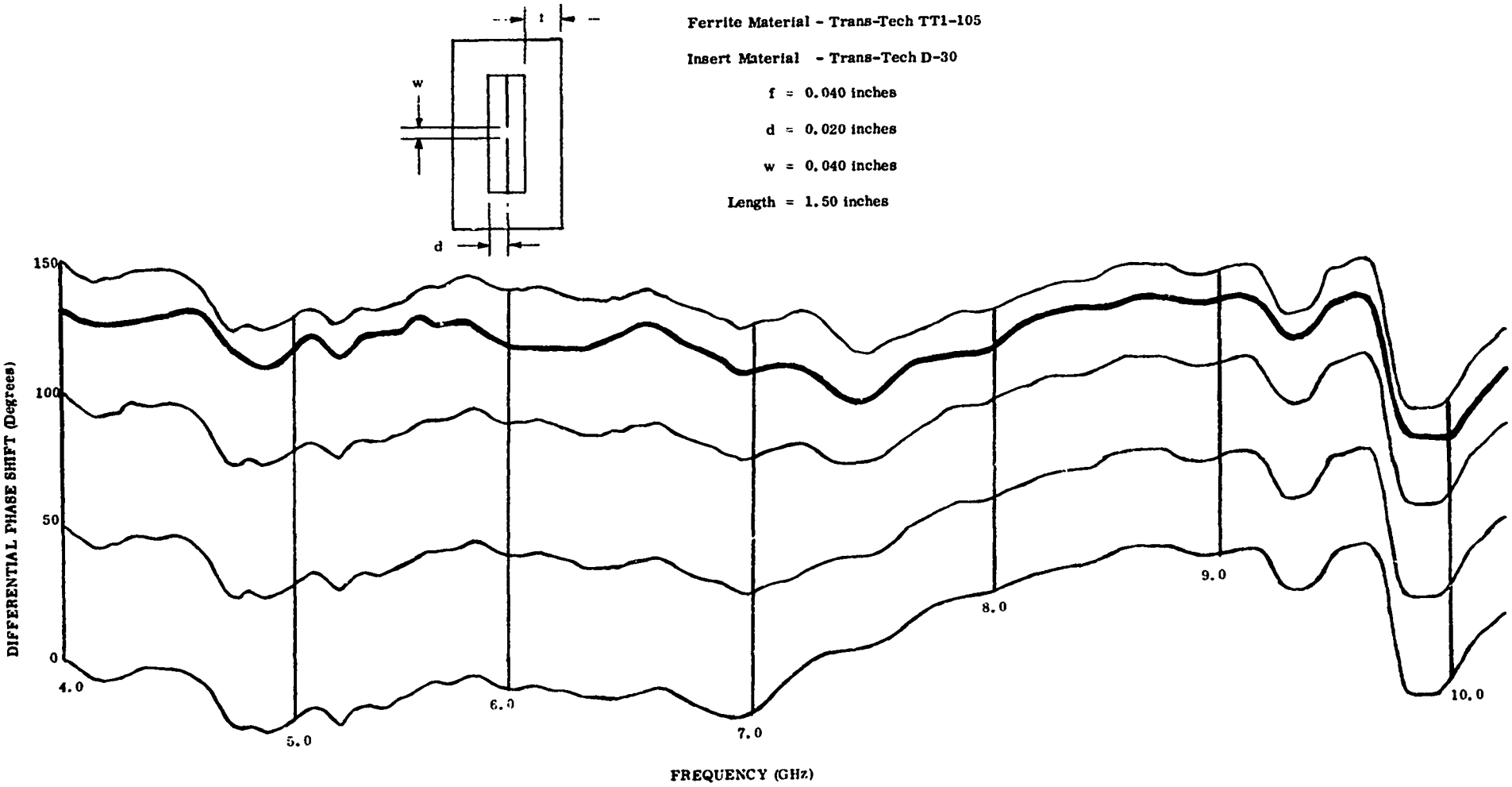

FIGURE 22 - SWEPT DATA OF DIFFERENTIAL PHASE SHIFT VS FREQUENCY (EXPERIMENTAL UNIT)

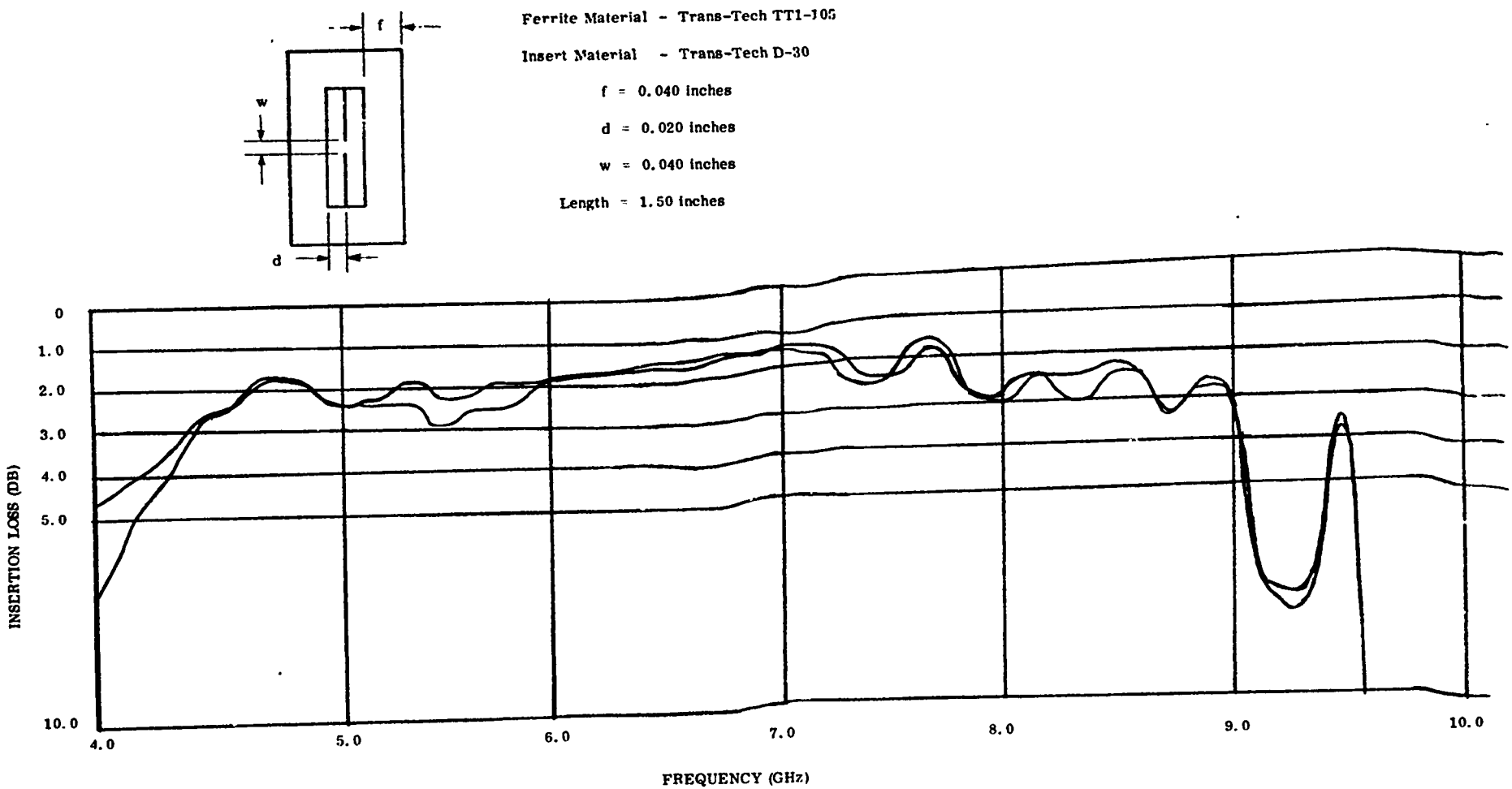

FIGURE 23 - SWEPT DATA OF INSERTION LOSS VS FREQUENCY (EXPERIMENTAL UNIT)

VII MEASUREMENTS ON FINAL DEVELOPMENTAL MODELS

Final developmental devices were constructed using the optimum dimensions discussed in the previous section. Figure 24 is a photograph of an assembled phase shifter and driver. Figure 25 shows a phase shifter with the cover plate removed. The ferrite sections used in these final devices were all 4.5 inches long. It was felt that this length would produce at least 360 degrees of differential phase shift. Swept data indicating the phase shift, insertion loss, and VSWR as functions of frequency was taken. The differential phase shift vs magnetizing pulse width characteristics of these devices were also measured at a single frequency. All of this data is shown in Figures 26 thru 29.

As in the experimental device, the differential phase shift versus frequency performance of this device is fairly frequency insensitive (Figure 26). It appears, however, that at the low end of the band there is a slight decrease in phase for increasing frequency. This characteristic was not observed on the experimental unit of the same cross-section.

The insertion loss of the final unit falls somewhere between 2 and 3 db across the band (Figure 27). It is felt that close to 1 db of this loss is generated by the coax to slotline transitions at the input and output of each device which required the use of a mylar insulator to isolate the case ground from the ground of the slotline transmission line. Initial tests on the final slotline phase shifters indicated that a shorted-turn effect was being generated by the slot conductors in

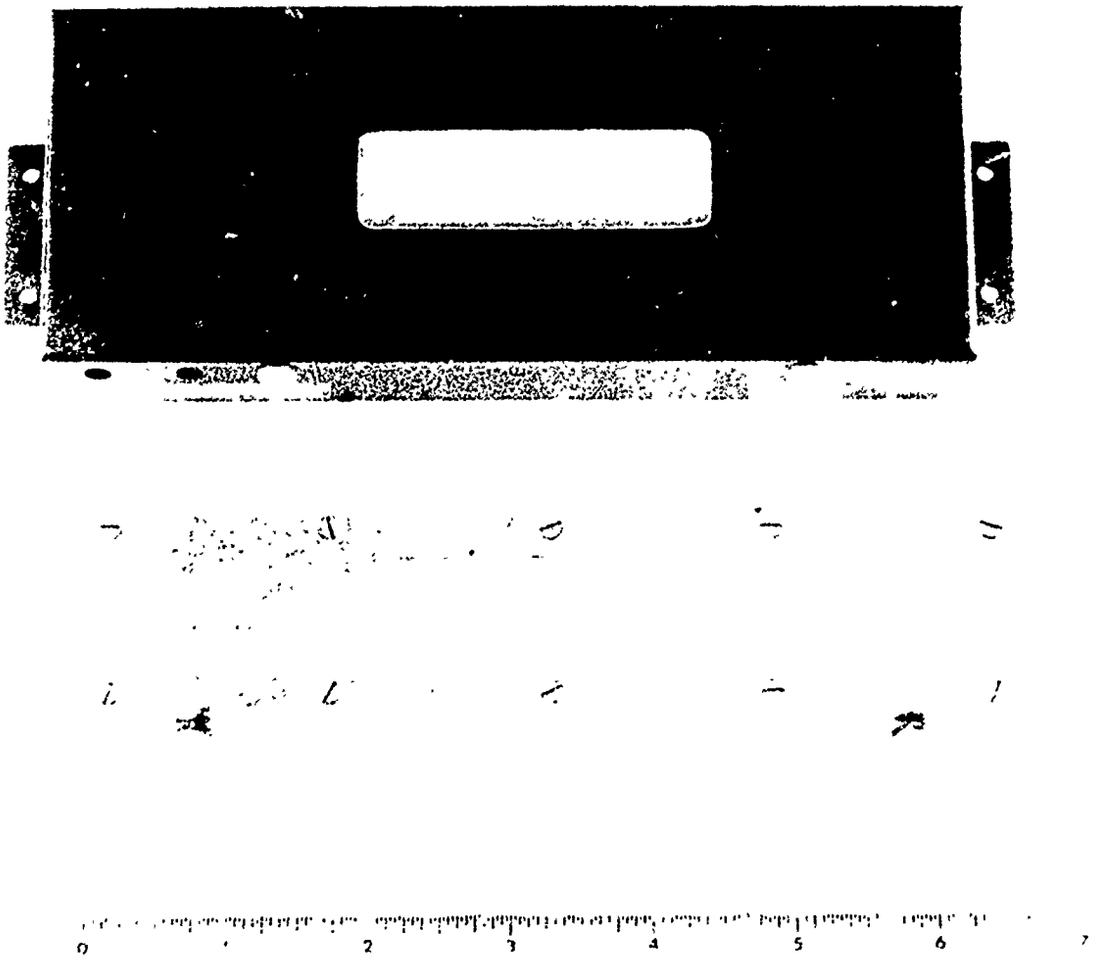

[illegible] PHOTOGRAPH OF ASSEMBLED SLOT LINE PHASE SHIFTER AND DRIVER CIRCUIT

Reproduced from best available copy.

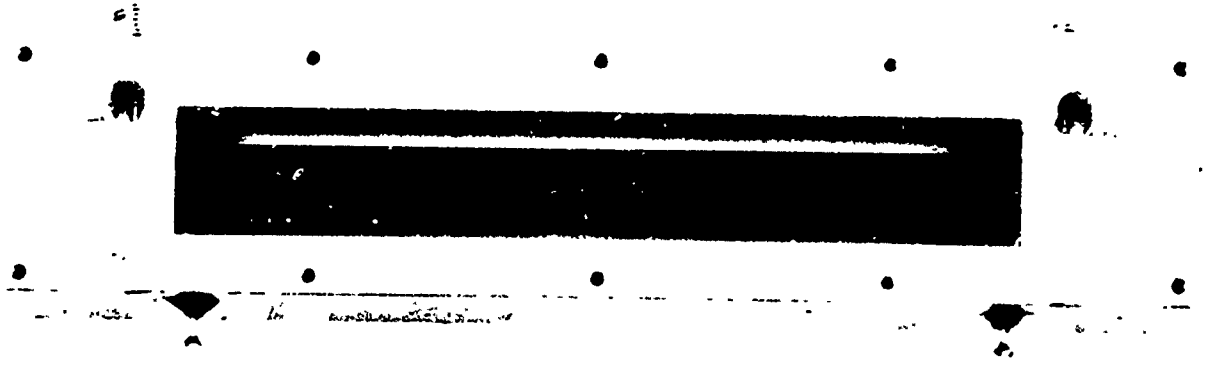

Reproduced from best available copy.

FIGURE 25 PHOTOGRAPH OF SECOND PHASE SET UP

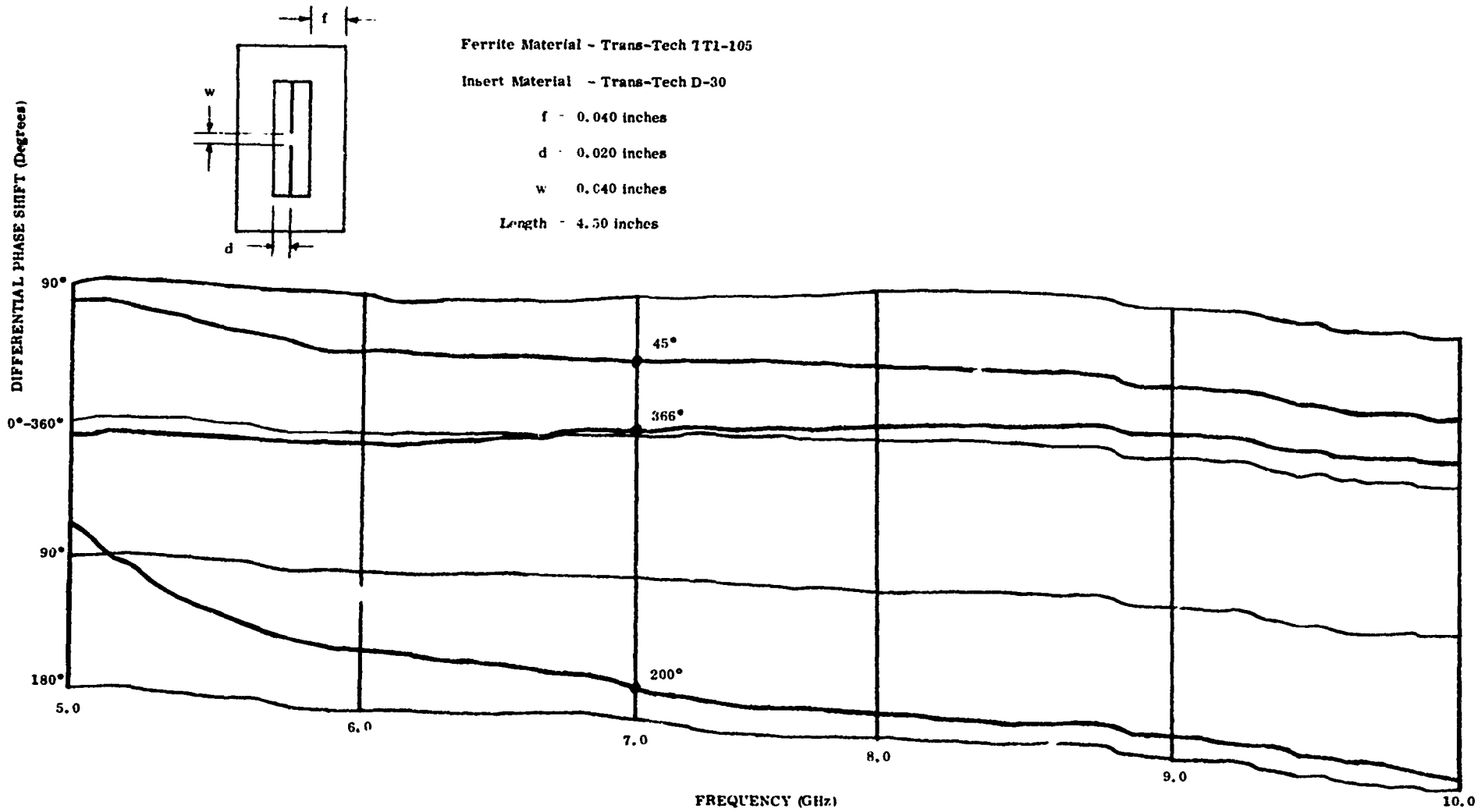

FIGURE 26 - MEASURED DIFFERENTIAL PHASE SHIFT VS FREQUENCY OF FINAL DEVELOPMENTAL UNIT

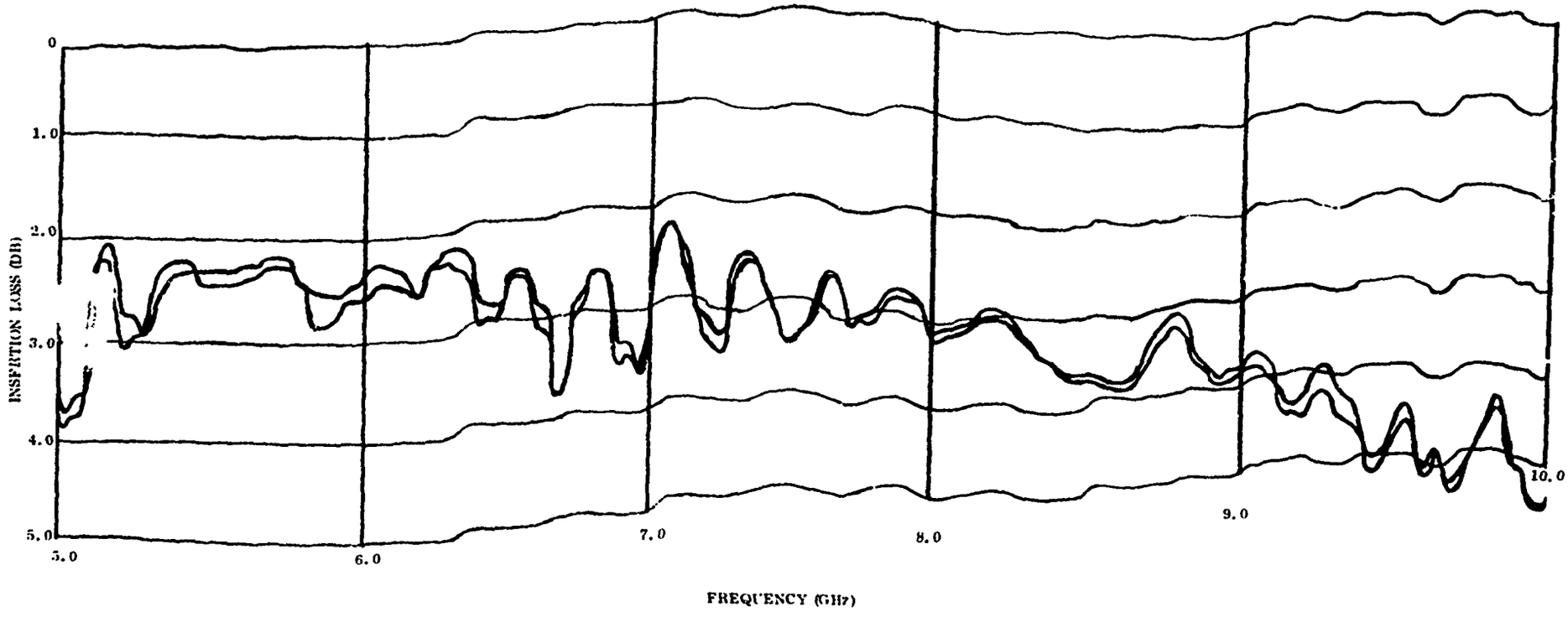

FIGURE 27 - MEASURED INSERTION LOSS VS FREQUENCY OF FINAL DEVELOPMENTAL UNIT

the phase shifter and the metal housing used to hold the device together. The current path of this shorted turn is from the slot conductors to the ground plane of the microstrip section, to the outer conductor of the SMA chassis connector and finally to the metal housing of the device. The presence of the shorted turn caused the driver circuits, used to transfer flux into the ferrite portion of the device, to prematurely turn off due to a current sensing overload protection circuit within the driver. This, in turn, caused very low phase settings to be realized. The shorted-turn effect was overcome by insulating the slotline conductors from the ground planes of the microstrip to slotline transitions. When this was done phase settings above 360 degrees were achieved. The technique that was finally used to achieve this insulation involved the use of a 0.002 inch mylar strip. The current path of the propagating r.f. fields were also interrupted by the mylar insulation and degradation in VSWR and insertion loss performance did occur. The total effect of using this insulator resulted in an insertion loss increase of close to 0.5 db and an average increase in VSWR(DBS) of about 1.5 dbs. A simple means of overcoming the shorted-turn problem for future devices is to fabricate the housing out of a nonconducting material such as plastic.

The VSWR of the developmental models is shown in Figure 28. Peak VSWRs over 2.0:1 were measured. The main source of this high VSWR is the coax-microstrip-slotline transition. The original transistors operated from 4.0 to 7.0 GHz. Scaling was used to obtain a transition that would operate from 5.0

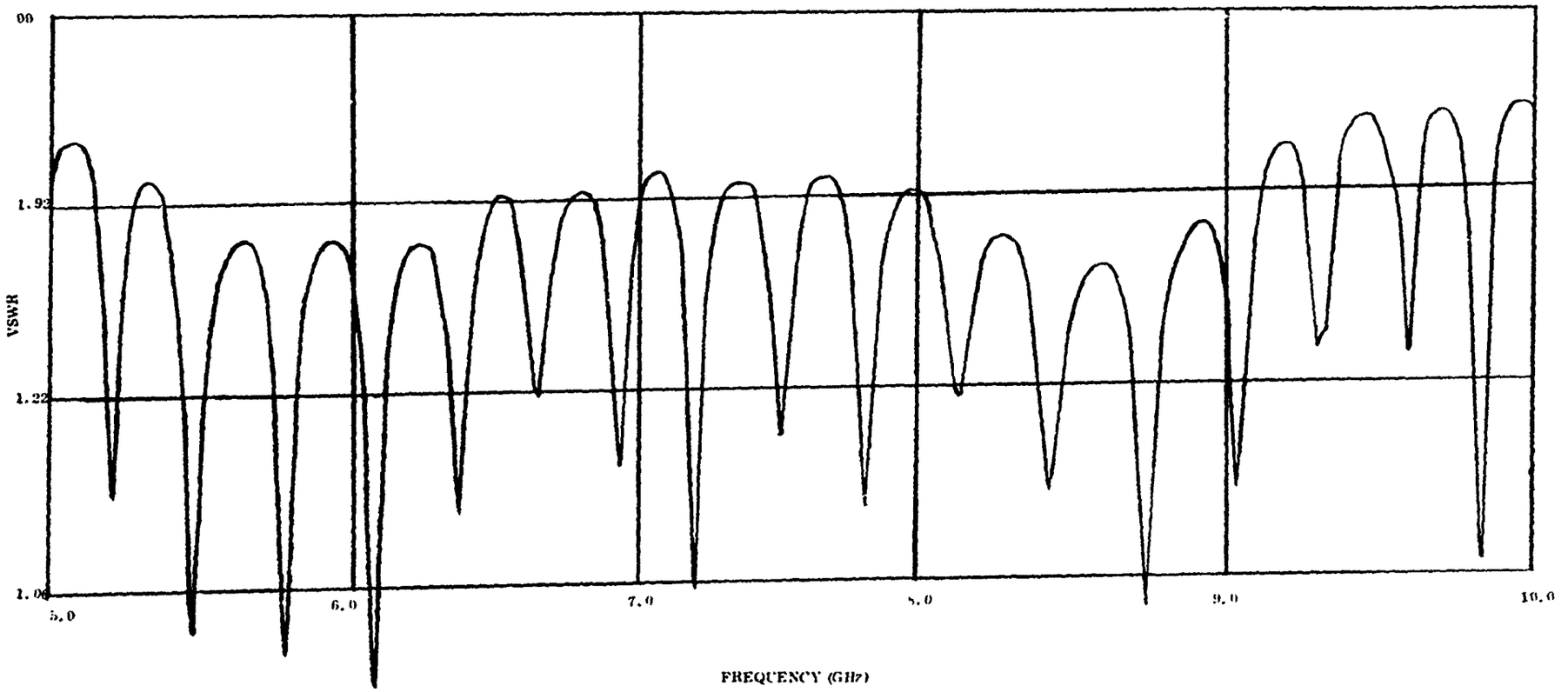

FIGURE 28 - MEASURED VSWR VS FREQUENCY OF FINAL DEVELOPMENTAL UNIT

to 10.0 GHz. This was done by reducing all microstrip line widths, slotline widths and substrate thicknesses by approximately 15%. A VSWR per transition of 1.5:1 was achieved up to 9.0 GHz. Slight mechanical adjustments resulted in better performance up to 10.0 GHz but with accompanying degradation at the low end of the band. It is obvious that a better figure of merit could be achieved if a better matched transition had been realized.

Differential phase shift versus magnetizing pulsewidth characteristics are shown in Figure 29. It appears that an S-shaped response is produced by the slotline phase shifter which is similar to other nonreciprocal ferrite phase shifters but is atypical in comparison to the nonreciprocal waveguide flux transfer latching ferrite phase shifter.

Measured data on the final units indicated that figures of merit of about 180 degrees per db of loss can be achieved with slotline devices. This is lower than originally anticipated. The causes of the lower than expected phase performance are believed to be associated with air gaps that exist between the high dielectric constant inserts and the walls of the ferrite toroid within the phase shifter. These gaps are located in the high circularly polarized field regions of the slotline propagating structure and are therefore in the most critical region of the device. The higher than expected loss is attributed to the microstrip to slotline transitions which, coupled with the mylar insulation used for eliminating the shorted-turn effect, produce about one db of loss. It is felt however that by exercising extreme care in the fabrication of these devices and by eliminating the shorted-turn phenomenon a figure of merit close to 360 degrees per db may be achieved.

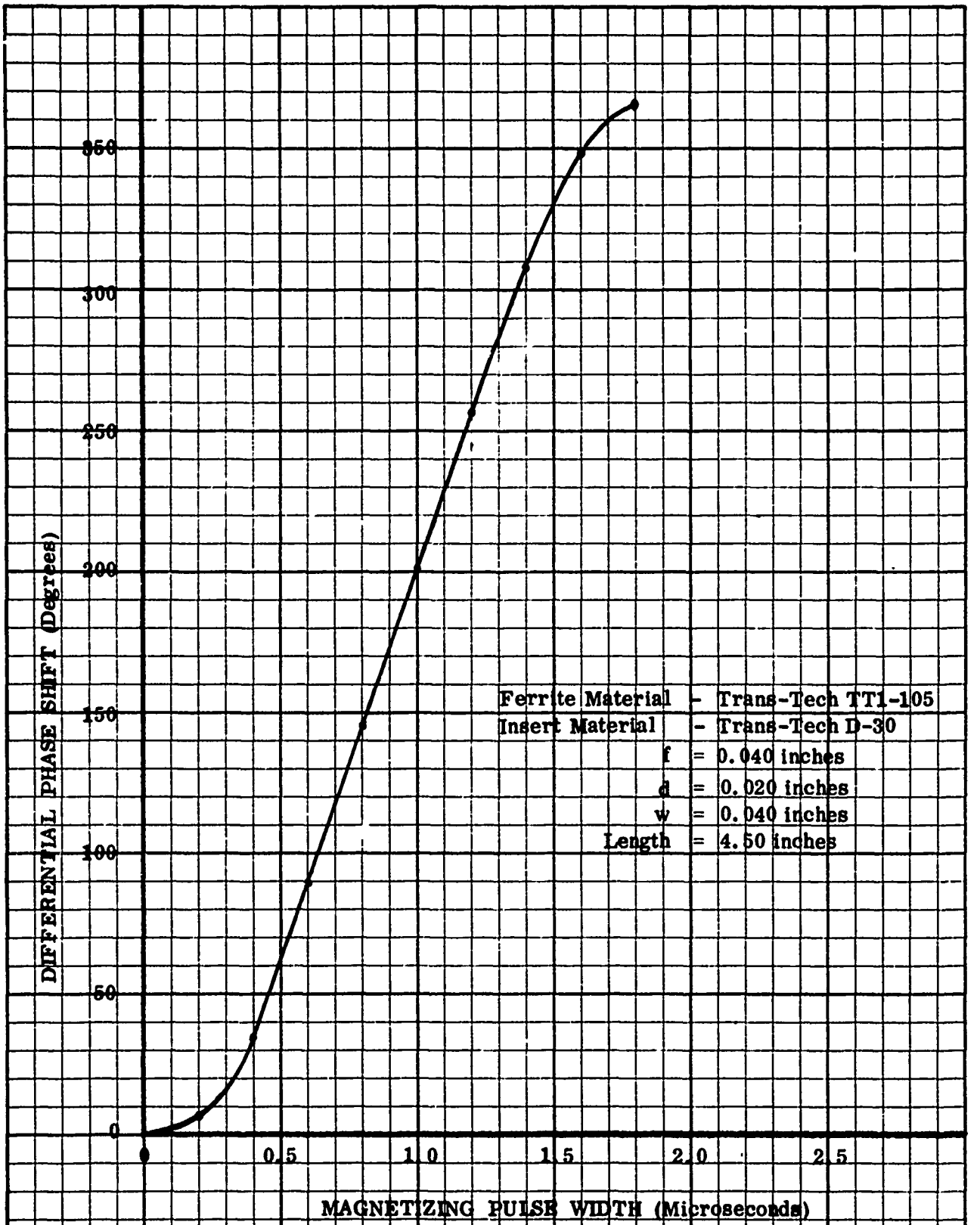

Figure 29 - Measured Differential Phase Shift vs Magnetizing Pulse Width of Final Developmental Unit

As mentioned earlier, the VSWR and loss of the coax-stripline-slotline transition were excessive and contributed significantly to the overall loss of the device. It did, however, operate over the band from 5.0 to 10.0 GHz with a maximum VSWR under 1.6:1 and a maximum loss of 0.6 db. Figure 30 is a sketch of the transition with the final dimensions listed.

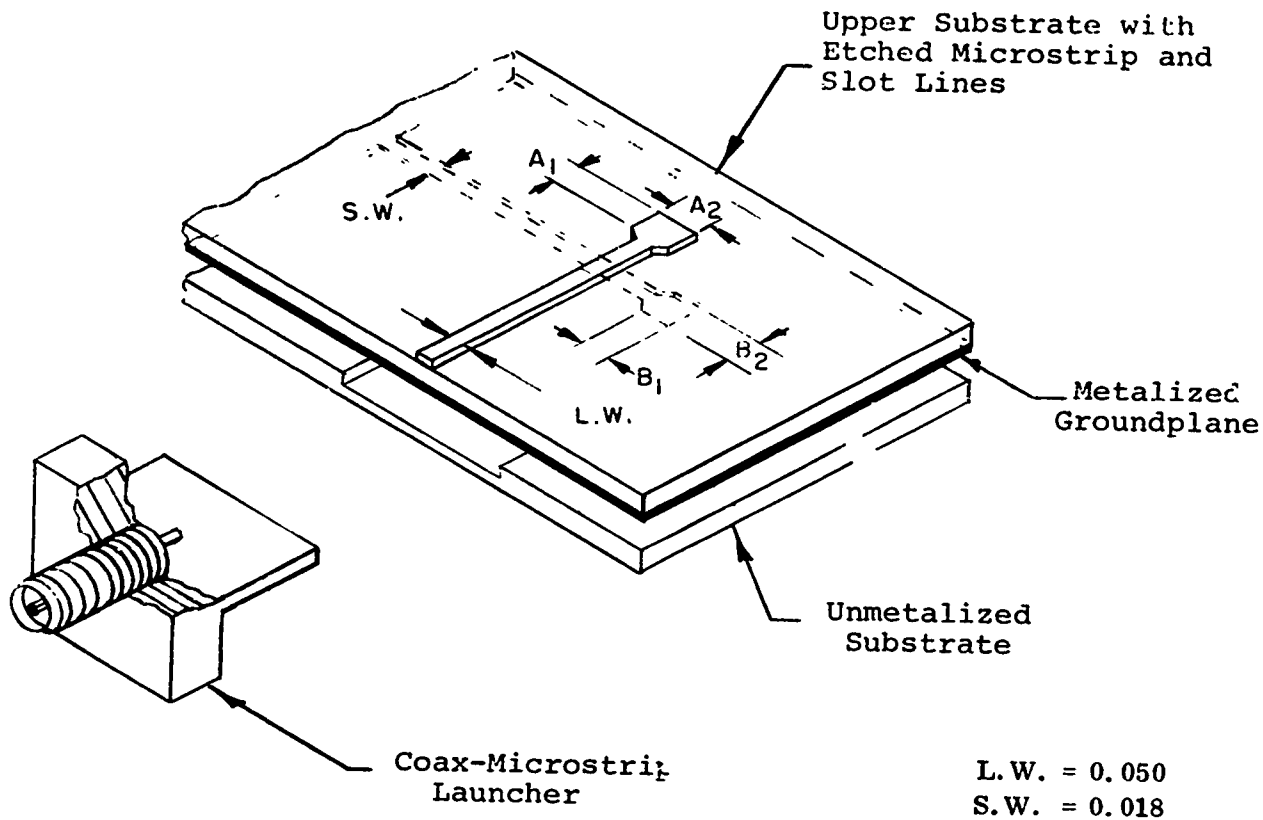

L.W. = 0.050
S.W. = 0.018
A_1 = 0.130
A_2 = 0.100
B_1 = 0.146
B_2 = 0.036

Figure 30 - Sketch of Coax-Microstrip-Slotline Transition

VIII CONCLUSIONS

During the course of this program it was demonstrated that nonreciprocal slotline latching ferrite phase shifters can be built with a moderate figure of merit. It is felt that by optimizing certain portions of the device close to 360° per db of loss should be achieved. The best figure of merit achieved during the course of the program was approximately 160° per db of loss. Improvement could probably be realized by fabricating toroids and dielectric inserts with minimun air gaps. It is believed that the air gaps which existed in the final units resulted in poorer than realizable phase shift per unit length. This tolerance requirement however may be a fundamental limitation in the practicality of this type of device. Further work should also be directed towards realizing a low loss, low VSWR transition into the slotline propagating structure.

The device is attractive in that it can be designed to produce relatively frequency insensitive differential phase shift. In addition it is a compact device which could be incorporated easily in microstrip (or slotline) subsystems. For this reason further development effort should be pursued.

REFERENCES

(1) S. B. Cohn, "Slot Line - An Alternative Transmission Medium for Integrated Circuits", 1968 IEEE G-MTT International Microwave Symposium Digest, pp 104-109.

(2) Mariani, Heinzman, Agrios and Cohn, "Slot Line Characteristics", IEEE Transactions Microwave Theory and Techniques, vol. MTT-17, pp 1091-1096, December 1969.

(3) E. G. Cristal, A. Podell, & S. B. Cohn, "Microwave Active Network Synthesis", Final Report, February 1972. Work done under Contract DAAB07-70-C-0044 for the U. S. Army Electronics Command, Fort Monmouth, New Jersey.