748386

UNCLASSIFIED
Security Classification

DOCUMENT CONTROL DATA - R & D

(Security classification of title, body of abstract and indexing annotation must be entered when the overall report is classified)

1. ORIGINATING ACTIVITY *(Corporate author)* Harry Diamond Laboratories Washington, D.C. 20438	2a. REPORT SECURITY CLASSIFICATION Unclassified 2b. GROUP

3. REPORT TITLE

INERTIAL IMPACT SWITCHES FOR ARTILLERY FUZES,
PART I: DEVELOPMENT

4. DESCRIPTIVE NOTES *(Type of report and inclusive dates)*

5. AUTHOR(S) *(First name, middle initial, last name)*

Robert W. Thiebeau and George K. Lucey Jr.

6. REPORT DATE July 1972	7a. TOTAL NO. OF PAGES 22	7b. NO. OF REFS 0
8a. CONTRACT OR GRANT NO. b. PROJECT NO. DA-1W563613DE5503 c. AMCMS Code: 553K.12.E5503 d. HDL Proj: 44243	9a. ORIGINATOR'S REPORT NUMBER(S) HDL-TM-72-18 9b. OTHER REPORT NO(S) *(Any other numbers that may be assigned this report)*	

10. DISTRIBUTION STATEMENT

Approved for public release; distribution unlimited.

11. SUPPLEMENTARY NOTES	12. SPONSORING MILITARY ACTIVITY U.S. Army Materiel Command

13. ABSTRACT

The inertial impact switch used in the M429 rocket fuze was selected as a PD (point-detonating) element for the M514A1E1 artillery fuze to optimize the graze sensitivity and impact reliability. However, the average sensitivity of the M429 switch had to be changed from 675 g to 425 g to achieve a performance improvement over the crush switched M514A1 fuze. Field tests showed that lowering the g level increased the impact reliability and decreased the depth of penetration prior to function. These tests also showed that impact reliability can be further improved by increasing the number of switches in the fuze. Limited field testing indicated the switches are safe when the projectile nutates or is fired through rain.

I

DD FORM 1 NOV 65 1473 REPLACES DD FORM 1473, 1 JAN 64, WHICH IS OBSOLETE FOR ARMY USE.

UNCLASSIFIED
Security Classification

UNCLASSIFIED
Security Classification

14. KEY WORDS	LINK A ROLE	LINK A WT	LINK B ROLE	LINK B WT	LINK C ROLE	LINK C WT
Impact	8	3				
Switches	8	3				
Point Detonation	8	3				
Graze	8	3				
Inertial	8	3				

II

UNCLASSIFIED
Security Classification

AD

DA-1W563613DE5503
AMCMS Code: 553K.12.E5503
HDL Proj: 44243

HDL-TM-72-18

INERTIAL IMPACT SWITCHES FOR ARTILLERY FUZES, PART I: DEVELOPMENT

by

Robert W. Thiebeau

George K. Lucey, Jr.

July 1972

DDC
SEP 20 1972
D

U.S ARMY MATERIEL COMMAND
HARRY DIAMOND LABORATORIES
WASHINGTON, DC 20438

APPROVED FOR PUBLIC RELEASE DISTRIBUTION UNLIMITED

ABSTRACT

The inertial impact switch used in the M429 rocket fuze was selected as a PD (point-detonating) element for the M514A1E1 artillery fuze to optimize the graze sensitivity and impact reliability. However, the average sensitivity of the M429 switch had to be changed from 675 g to 425 g to achieve a performance improvement over the crush switched M514A1 fuze. Field tests showed that lowering the g level increased the impact reliability and decreased the depth of penetration prior to function. These tests also showed that impact reliability can be further improved by increasing the number of switches in the fuze. Limited field testing indicated the switches are safe when the projectile nutates or is fired through rain.

Preceding page blank

CONTENTS

ABSTRACT..... 3

1. INTRODUCTION..... 7

2. SWITCH DESIGN.....10

3. SWITCH RELIABILITY.....12

4. SUMMARY.....18

TABLES

I. Characteristics of weapons that may use the M514A1E1 fuze... 7
II. Performance characteristics of inertial impact switches mounted in the M514A1E1 fuze.....13
III. Performance characteristics of multiple switches connected in parallel as opposed to a single switch per fuze.....14
IV. TECOM safety tests of low-g impact switches.....16

FIGURES

1. Early model of the inertial impact switch used in the M429 rocket fuze..... 8
2. Inertial switch mounted in M514A1E1 artillery fuze..... 8
3. Determination of g-rating..... 9
4. Typical variation in sensitivity of an inertial switch about the circumference.....10
5. Modified production model of the M514A1E1 inertial impact switch.....11
6. Field test results from various inertial impact switches....12
7. Ejection of a fuze 30 ft downstream from the muzzle of a 175-mm gun.....15
8. Nose cones tested by HDL on the Holloman Air Force Base Rocket Sled.....15
9. Mutilated nose cones simulating damage that could be inflicted by gun crews.....16
10. Design modifications planned for the M514A1E1 impact switch.17

Preceding page blank

1. INTRODUCTION

In 1966, Dr. M. Apstein of Harry Diamond Laboratories (HDL) invented an inertial impact switch for the M429 rocket fuze (non-spin). L. Lofgren and C. Whelan worked on the initial development with the objective of making a low-cost, compact switch that would be safe from in-flight vibrations of the rocket, yet reliable upon graze impact. The switch was changed only in production details during product improvement efforts; a schematic is shown in figure 1.

The sensitivity of the switch initially designed was 300 g. Rope-stand tests of the 2.75-in. rocket showed that this was safe from early firing caused by vibrations of the rocket motor. However, to allow for manufacturing tolerances, specifications for the switch permitted a range in sensitivity of 300 to 1000 g.

At the beginning of the M514A1E1 artillery fuze program, Dr. Apstein proposed mounting the M429 switch as shown in figure 2, rather than continuing the use of the conventional crush switch employed in the stockpile M514A1 fuzes. The objective was to increase impact function reliability by improving graze sensitivity and to eliminate the need for the stiffer, thicker M514A1E1 nose cone to crush upon impact. The nose cone was changed to avoid the ballooning failures that had occurred during low-angle, high-velocity firings of the 175-mm gun.

P. Hughes (Naval Ordnance Laboratory, White Oak, Maryland) pointed out that the upper level of the 300- to 1000 g switch may be too high because heavy projectiles would have to penetrate the ground too far to achieve a deceleration sufficient to close the switch (see table I for applicable projectiles). Some HDL field tests tended to corroborate this contention, so an investigation into the causes of wide variations in g values on production switches was begun by testing switches on the centrifuge, as shown in figure 3.

Table I. Characteristics of weapons that may use the M514A1E1 fuze.

Weapon & Charge	Spin (rpm)	Setback (g)	Shell Weight (lb)	Muzzle Velocity (ft/sec)
4.2-in. 5 Inc.	3,000	1,960	26	349
41 Inc.	8,400	7,710	26	963
105-mm Zone 1	5,580	2,890	33	640
Zone 7	13,260	13,300	33	1,525
155-mm Zone 1	3,240	1,680	95	680
Zone 7	8.760	10,900	95	1,850
175-mm Zone 1	8,760	3,200	147.75	1,675
Zone 3	15,750	11,400	147.75	3,000
8-in. Zone 1	2,950	2,360	24	820
Zone 7	7,020	9,200	24	1,950

Preceding page blank

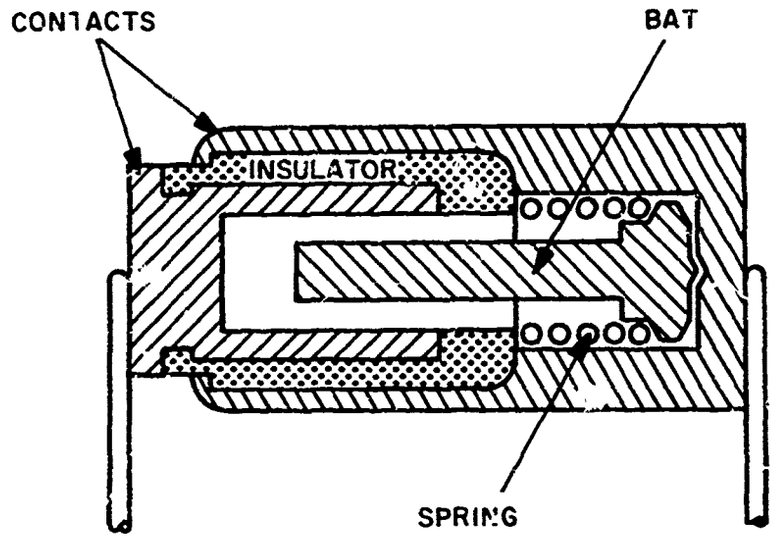

Figure 1. Early model of the inertial impact switch used in the M429 rocket fuze.

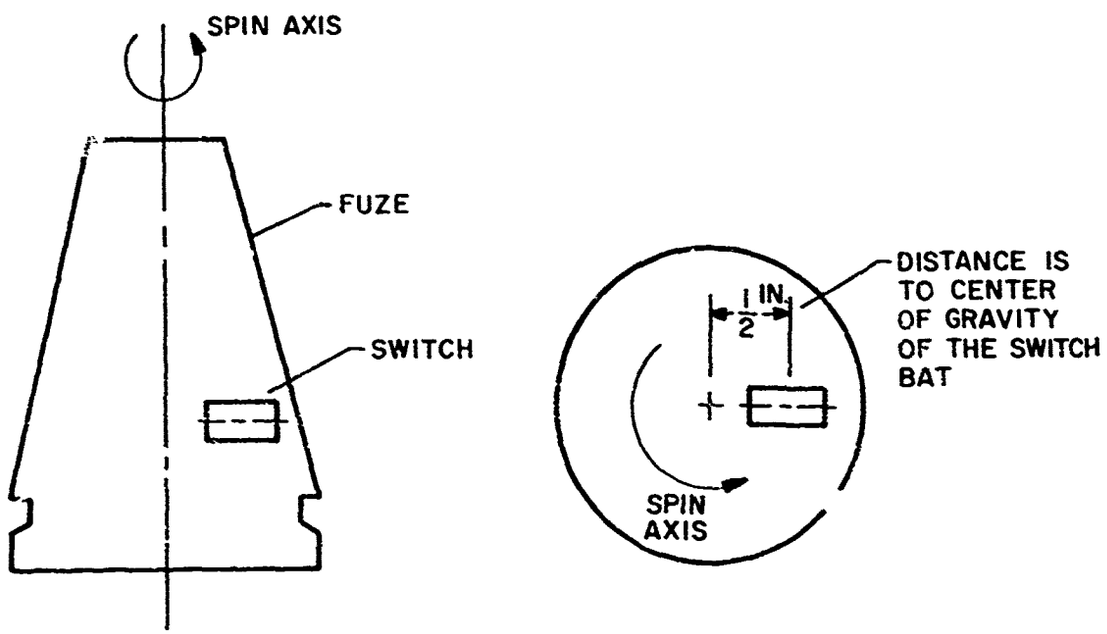

Figure 2. Inertial switch mounted in M514A1E1 artillery fuze. The direction of mounting allows spin forces to assist in keeping the switch open and safe in flight. The 1/2-in. position is dictated by other components in the fuze.

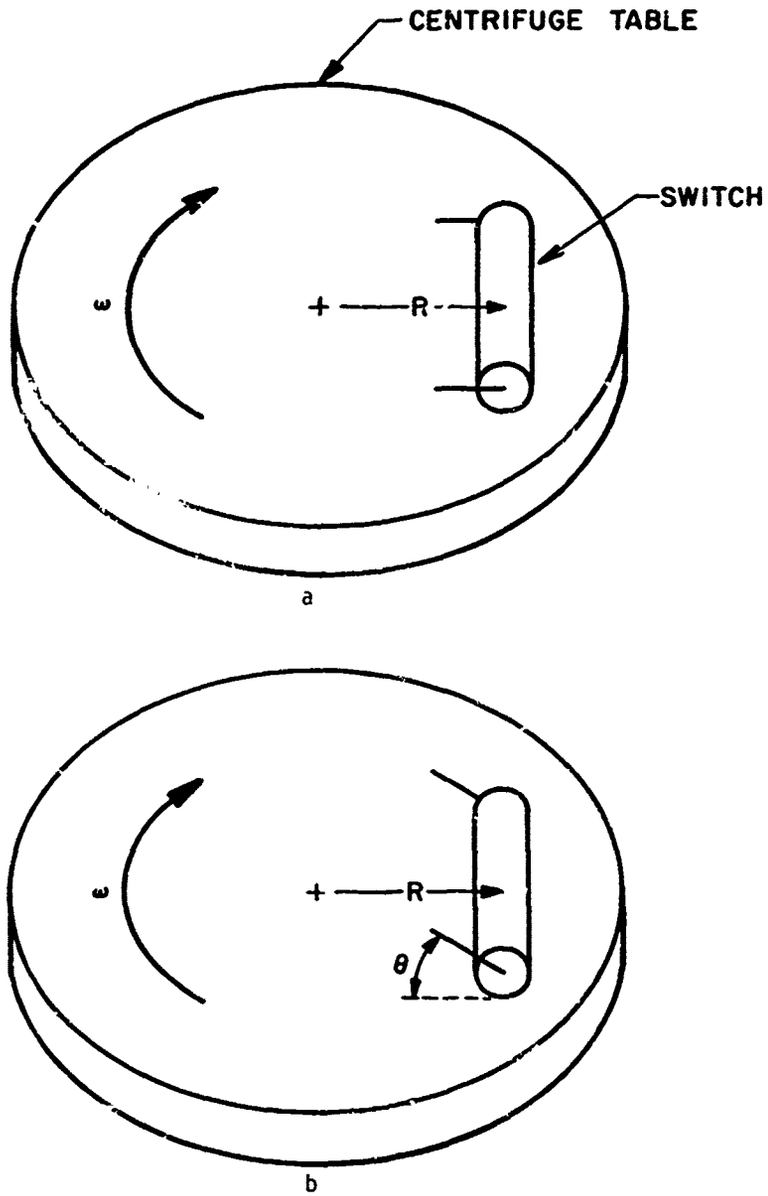

Figure 3. Determination of g-rating: (a) Centrifuge g ratings for switches are determined by recording the radial location R and the spin ω that causes closure, and then calculating the ratio $R\omega^2/G$, where G is the acceleration of gravity; (b) Variations in g ratings are checked by rotating the switch to different circumferential angles, θ.

2. SWITCH DESIGN

Ideally, the switch g-rating should remain the same as the switch is rotated about its own longitudinal axis, but tests showed wide variations as indicated in figure 4. This behavior was different for each switch tested--different in shape, in upper and lower extremes of g values, and in repeatability, if the same switch were tested more than once. Ordinarily, a single switch does not vary between 300 and 1000 g, but rather between narrower limits. The 300- and 1000-g figures are simply boundaries within which the maximum and minimum g values of all production switches must fall.

The variations of switch g shown in figure 4 were attributed to:

a. An eccentric line of action of the spring force relative to the center of gravity of the bat.
b. Variation in spring constant as forces are applied at different positions around the closed end of the spring.
c. Spots of bad gold plating causing high resistance on the contacts.
d. Binding of the bat against the stationary contact.

The line of action of the spring shown in figure 1 was improved by mounting the spring in a retainer on both ends. Variations in spring constant about the circumference of a flat-ended spring cannot be controlled. The contaminant that causes bad gold plating has not yet been

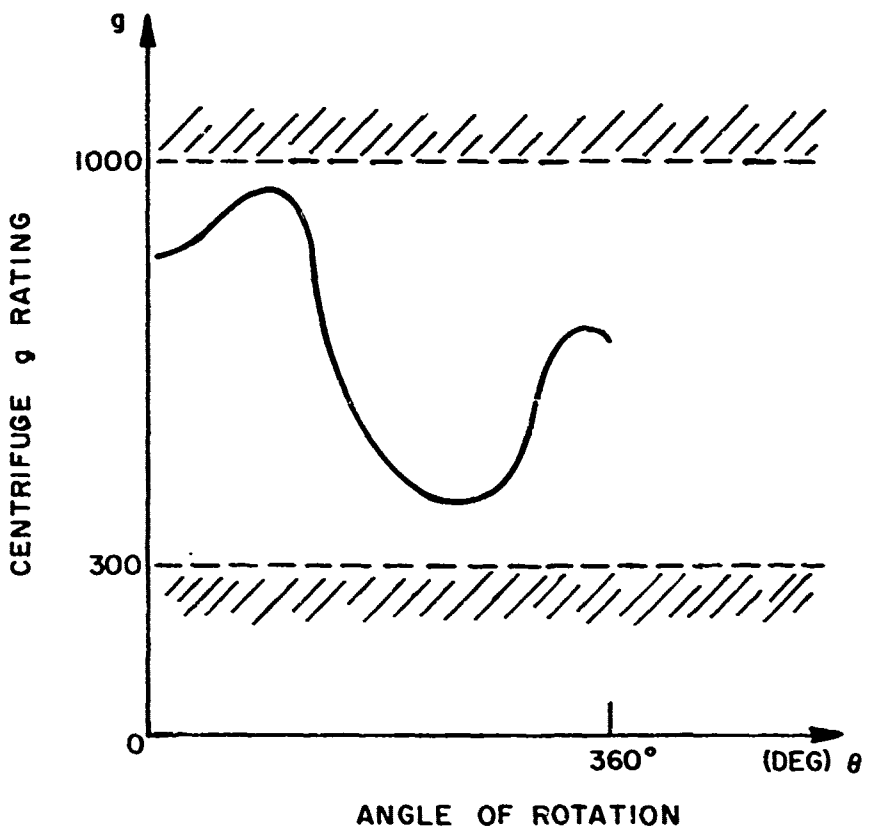

Figure 4. Typical variation in sensitivity of an inertial switch about the circumference.

identified, but changes in cleaning processes on the contacts have nearly eliminated the problem. Binding of the bat was eliminated by increasing the clearances, and by redesigning the bat to rotate about a single pivot point rather than two positions. Figure 5 shows the redesigned switch. Tests made on the centrifuge showed that the improvement in performance was from a 300- to 750-g range.

This spread in g was still considered to be high, so a test series was prepared to determine the significance in terms of imact reliability. The first step was to select a group of switches at random from the production lot of 300- to 1000-g (675-g average) switches. These were fired from the 4.2-in. mortar at 5.5 increment and a 45-deg elevation angle into wet farmland. The impact reliability was found to be around 15 percent. This is plotted in figure 6. The production lot of switches was then screened to yield two groups of switches on either side of the 675-g average: 557-g and 753-g. Firing tests into dry farmland rather than wet (to simplify recovery of the samples) showed that the lower g switches were distinctly more reliable than the higher g models. To complete the test series, a group of switches with a 425-g average was constructed by inserting a softer bias spring. Firing these into wet farmland strengthened the evidence that lowering the g level greatly improves the impact reliability.

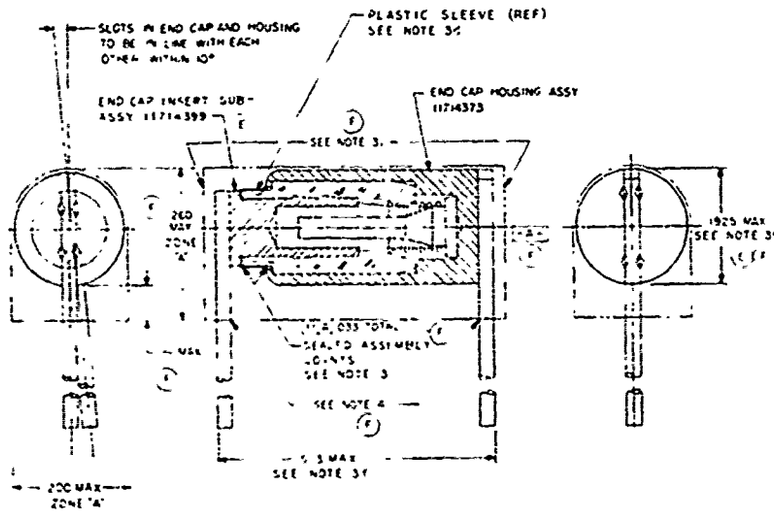

Figure 5. Modified production model of the M514A1E1 inertial impact switch.

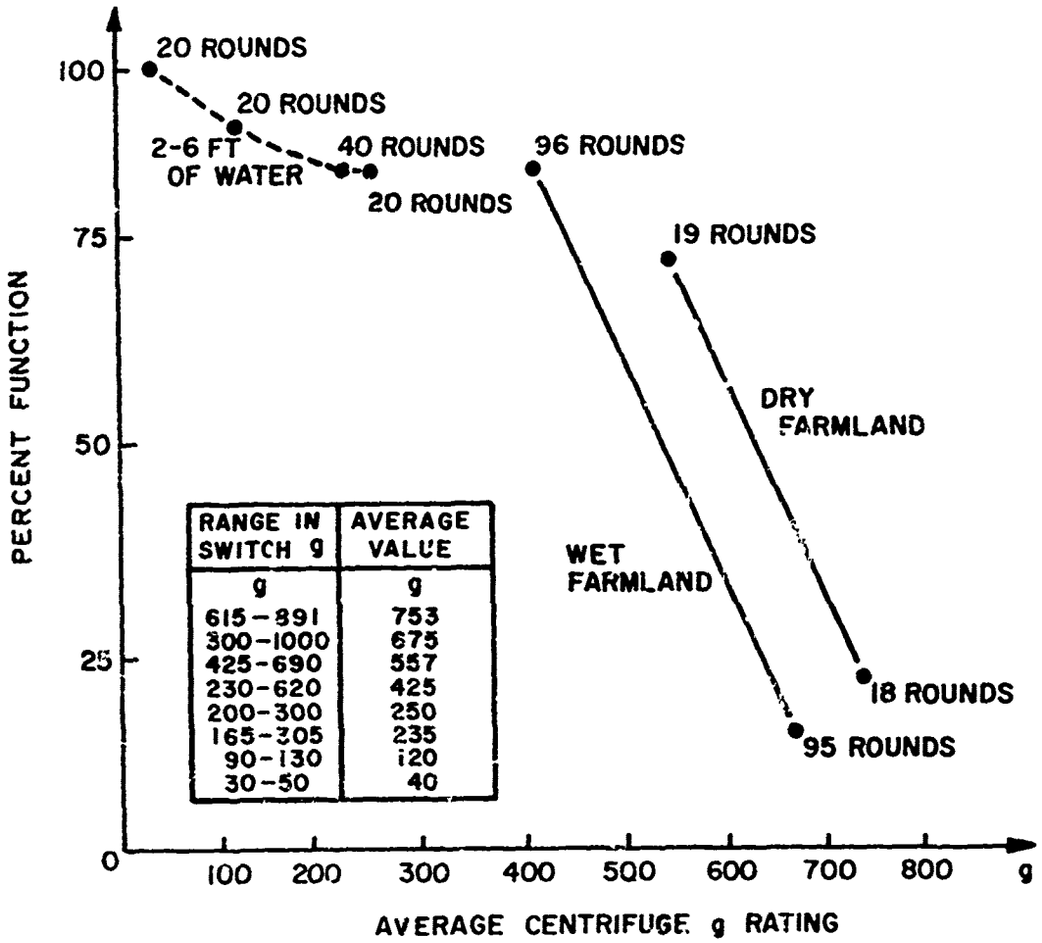

RANGE IN SWITCH g	AVERAGE VALUE
g	g
615–891	753
300–1000	675
425–690	557
230–620	425
200–300	250
165–305	235
90–130	120
30–50	40

Figure 6. Field test results from various inertial impact switches fired from the 4.2-in. mortar at 5.5 increment, 45-deg elevation.

3. SWITCH RELIABILITY

A search of the M514A1 files showed that the impact reliability of the switches with a 557-g average was better than that of the crush switch used in stockpile fuzes, so the drawing package of the M514A1E1 inertial switch was changed to lower the average g level from 675 to 425 g. Table II shows that this change also reduces the depth of penetration. The switch g was not lowered any further pending inquiries about the variables affecting the safety of an inertial switch during the flight of a spinning projectile.

Table II. Performance characteristics of inertial impact switches mounted in the M514A1E1 fuze and fired into wet ground from the 4.2-in. mortar at 5.5 increments charge and 44-deg elevation.

Switch Sensitivity (g)	Number of Rounds	Number of Proper PD Functions	Percentage of Propers* Super-Quick	Delay
230-620	96	78	55	45
300-1000	95	14	36	64

*Judgment as to super-quick or delay function was based upon the shape of the explosion as shown below.

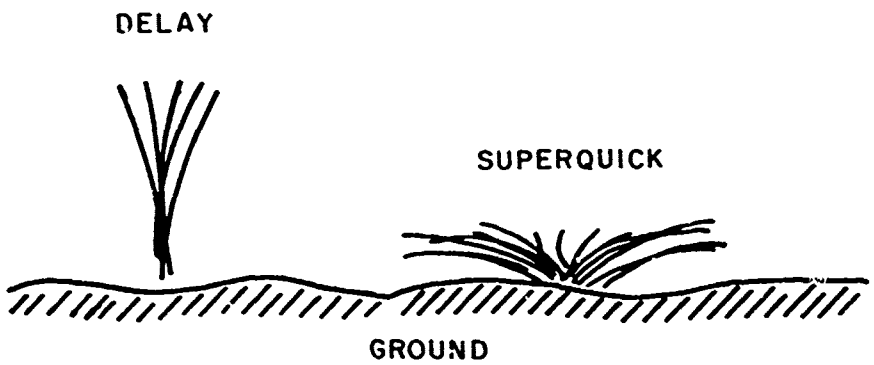

Because the 4.2-in. mortar shell is light and known to be unstable in flight, it was considered an ideal vehicle for in-flight safety studies of the switch. Rounds with switches of different g ratings were fired in an attempt to isolate a g level that is unsafe in flight, but no air bursts occurred. The safety tests also doubled as impact reliability tests. Table III shows that reliability can be obtained when very low g switches impact water (fig. 6), but it can be further improved when more than one switch is included in the fuze.

Reliability increases when multiple switches are used for two reasons. First, switches have varying degrees of sensitivity about their circumference, hence, more than one switch increases the chances of having a sensitive mode in the direction of impact. Second, the spatial position of the switch at the instant of projectile impact is an important factor in impact reliability. The switch construction is such that the force to close the switch increases significantly as the impact direction changes from a normal to the bat axis. Mounting more than one switch in the fuze improves the overall hemispherical sensitivity. A cost-effectiveness analysis is necessary to determine the benefits of adding switches to increase impact reliability; the present cost is 38¢ per switch in lots of 100,000.

Table III implies that 100-percent PD (point-detonating) reliability can be obtained with 30- to 50-g switches. This reliability is certainly desirable, but such low-g switches cannot be specified for the M514A1E1 fuze without additional investigation of the possibility of in-flight functions. The concern is that premature and early functions of some production model M514A1E1 fuzes have occurred in field tests. Although there are several likely reasons for these functions, the impact switch must be considered suspect, as it is wired directly to the detonator.

Table III. Performance characteristics of multiple switches connected in parallel as opposed to a single switch per fuze. The switches were mounted in the M514A1E1 fuze and fired in the 4.2-in. mortar at 45-deg elevation and 5.5 increments.

Switch Sensitivity (g)	Number of Switches per Round	Number of Rounds	Percentage Rounds Functioned	Impact Area
30-50	3	10	100	Water
30-50	1	10	100	2-6 ft.
90-150	3	10	90	deep
90-170	1	10	80	
200-300	3	10	90	
200-310	1	10	70	
165-305	3	20	85	Plowed
175-305	1	20	85	ground

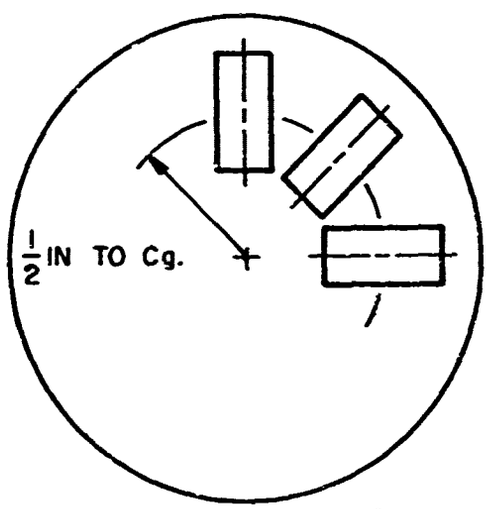

Mounting technique for 3 switches per fuze.

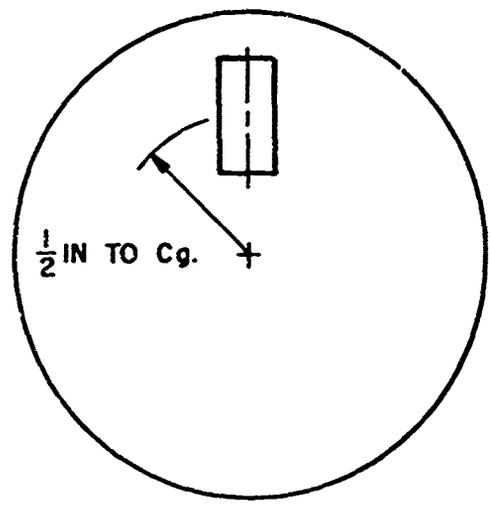

Mounting technique for 1 switch per fuze.

Studies into in-flight safety of the switch are incomplete, but some mechanisms have been hypothesized in which the desensitizing effects of spin may be theoretically overcome and the switch closed during flight. Summaries of these hypotheses are presented below.

1. The impact switch fires during the course of a downrange electronic head ejection as shown in figure 7. A new attachment technique designed by D. Painter of HDL may solve this ejection problem, and is currently under test.

2. Raindrop impacts excite the switch. Inspection of rain erosion damage shown in figure 8 led to a proposal of this as a mechanism of switch closure. It may be valid for the 175-mm projectile, but not for the 105-mm, since firings into rainstorms at

Figure 7. Ejection of a fuze 30 ft downstream from the muzzle of a 175-mm gun. A fourth quarter tube fired at zone 3 with a 15% overcharge (to represent 140°F propellant conditions) was used. The fuze was pre-conditioned to 140°F

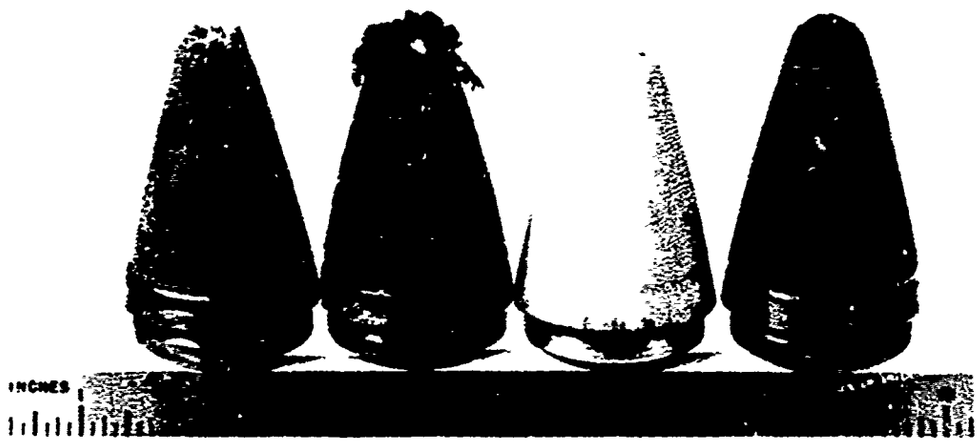

Figure 8. Nose cones tested by HDL on the Holloman Air Force Base Rocket Sled. The rainfield was one mile long and operating at 5 in./hr. The sled entered at 2900 ft/sec and exited at 1200 ft/sec, which is less severe than occurs on the 175-mm. The nose cone on the far right is the M514A1E1, and that second from the left is the stockpile M514A1.

Panama produced no switch functions. Additional discounting evidence is available in the TECOM Safety Tests shown in table IV. None of the rounds in these tests functioned on plywood impact, but all functioned on the ground beyond, indicating that the switches are quite sensitive to graze impact beyond the plywood.

Table IV. TECOM Safety Tests of low-g impact switches mounted in a 105-mm projectile fired at zone 6, 3-deg elevation into 1/8-in. plywood.

Switch g Level	Number of Rounds	Number of Switches per Round	Number of Functions on Plywood Impact	Number of Functions on Ground Beyond
30-50	12	3	0	12
76-156	12	3	0	12

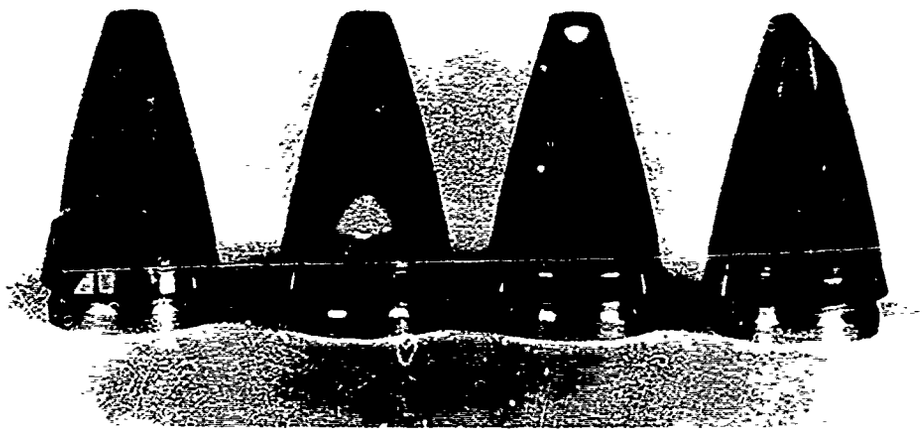

Figure 9. Mutilated nose cones simulating damage that could be inflicted by gun crews.

3. Projectile nutations excite the switch. Projectiles that undergo yaw and precession during flight may also experience nutations, especially if the nose cone were distorted by axial or lateral transients during setback, or by the gun crew during loading. A brief inquiry into nutations with four mutilated nose cones (fig. 9) was made by firing 30- to 50-g switches in the 4.2-in. mortar at 5.5 increments. The projectiles were heard wobbling, but no air bursts occurred. These results imply that higher-g switches in the heavier, higher-spin projectiles should be safe from nutations.

4. Rattling of the fuze sleeve within the projectile threads excites the switch. Evidence has been obtained in air gun experiments and field tests showing that an inelastic deformation of the aluminum fuze sleeve can occur during setback. This may transform a tightly seated fuze-projectile assembly into a fit that is as loose as the tolerances in the threads. Fuzes improperly assembled into the projectile can also leave a loose fit, and forcing functions caused by wind, yaw, and projectile spin could cause the fuze to rattle.

Ideally, the switch is not a resonant device and should be impervious to low-g cyclic loading. In reality, however, manufacturing difficulties may prevent a perfectly flat seat between the bat and the base against which it rests. The problem may be distortion of the switch parts or debris of some kind beneath the bat. As a result, the switch can enter into resonance. Vibration table experiments performed on 230- to 620-g switches show that at around 500 Hz, some switches can be made to function under 20-g driving loads. Higher loads at higher frequencies would be required when the switches are mounted in a spinning shell; an analysis of this situation will be presented in part II of this series on impact switches. A design modification, shown in figure 10, that should significantly decrease the resonance tendencies of the switch will be incorporated in product improvement efforts.

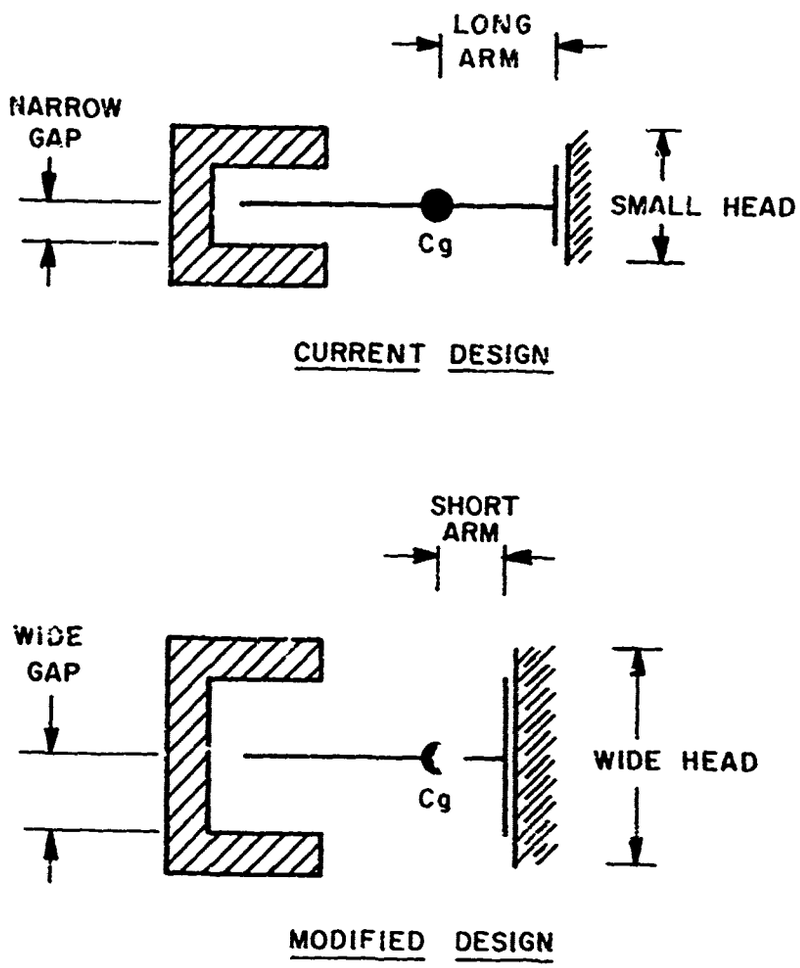

Figure 10. Design modifications planned for the M514A1E1 impact switch.

4. SUMMARY

The M514A1E1 artillery fuze employs a unique inertial switch as a PD element rather than a conventional crush device in order to improve impact function reliability by increasing graze sensitivity and eliminating the need for the nose cone to crush upon impact. This goal was not achieved with switches taken directly from the M429 rocket fuze stockpile, so design modifications were incorporated to reduce manufacturing problems and to increase the sensitivity from an average of 675 g to 425 g. Field tests showed that this increased the impact reliability, decreased the depth of penetration before function, and surpassed the performance of the crush switch used in the stockpiled M514A1 fuzes. Other tests showed that impact reliability can be further improved by increasing the number of switches in the fuze, but this approach is limited by cost.

Very low-g switches have shown good impact reliability, but these cannot be incorporated into fuze hardware until more is known about the design requirements for in-flight safety. Fuzes have been known to function prematurely, and although there are many potential causes, design precautions must be incorporated in the switch. Switch closure due to spin acting on an improperly mounted switch is of little concern, since this simply places a continuous drain on the firing capacitor. The prime concern lies in possible premature closure of switches that are properly mounted in the fuze. Several mechanisms have been hypothesized by which a properly mounted switch could be closed during flight. The forcing functions arise from failure of the fuze structure to remain on the projectile, impact with raindrops, nutations of the projectile, and rattle of the fuze. The last mechanism is the most plausible and is the subject of the next part in this series of texts.