AD 747946

NRL Memorandum Report 2479

Development of Optical Information Transfer Technology for Military Applications

A. F. MILTON, R. A. ANDREWS, AND T. G. GIALLORENZI

Optical Physics Branch
Optical Sciences Division

July 1972

NATIONAL TECHNICAL
INFORMATION SERVICE

NAVAL RESEARCH LABORATORY
Washington, D.C.

Approved for public release, distribution unlimited

UNCLASSIFIED
Security Classification

DOCUMENT CONTROL DATA - R & D

Security classification of title, body of abstract and indexing annotation must be entered when the overall report is classified)

1 ORIGINATING ACTIVITY (Corporate author) Naval Research Laboratory Washington, D.C. 20390	2a. REPORT SECURITY CLASSIFICATION UNCLASSIFIED 2b. GROUP ---

3 REPORT TITLE
DEVELOPMENT OF OPTICAL INFORMATION TRANSFER TECHNOLOGY FOR MILITARY APPLICATIONS

4 DESCRIPTIVE NOTES (Type of report and inclusive dates)
This is an interim report; work on the problem is continuing.

5 AUTHOR(S) (First name, middle initial, last name)
A. F. Milton, R. A. Andrews, and T. G. Giallorenzi

6 REPORT DATE July 1972	7a. TOTAL NO OF PAGES 32	7b. NO OF REFS 23
8a CONTRACT OR GRANT NO NRL Problem 65N01-31 b. PROJECT NO RR014-11-04 c d	9a. ORIGINATOR'S REPORT NUMBER(S) NRL Memorandum Report 2479 9b. OTHER REPORT NO(S) (Any other numbers that may be assigned this report)	

10 DISTRIBUTION STATEMENT
Approved for public release; distribution unlimited.

11 SUPPLEMENTARY NOTES	12 SPONSORING MILITARY ACTIVITY Department of the Navy (Office of Naval Research) Washington, D.C. 20360

13 ABSTRACT

Military avionics systems can be expected to benefit from the development of optical data communication systems which use fiber optics. Advantages involving size, weight and freedom from electromagnetic interference can be realized in the near future. Integrated optical circuits can increase the flexibility of such systems as well as perform independent functions in other useful optical devices.

The state of the art of optical fibers and integrated optical circuits is reviewed. A strategy for the development of these technologies is recommended. The optical technology requirements for four advanced military systems involving multiterminal data buses, heterodyne detection, tethers, and optical phase front control are described in detail.

DD FORM 1 NOV 65 1473 (PAGE 1)
S/N 0101-807-6801

UNCLASSIFIED
Security Classification

UNCLASSIFIED
Security Classification

14 KEY WORDS	LINK A ROLE	LINK A WT	LINK B ROLE	LINK B WT	LINK C ROLE	LINK C WT
Fiber optics						
Integrated optics						
Optical technology						
Optical information transfer						
Optical waveguides						
IR optics						

DD FORM 1 NOV 65 1473 (BACK)
(PAGE 2)

UNCLASSIFIED
Security Classification

CONTENTS

Abstract		ii
Problem Status		ii
Authorization		ii
I.	INTRODUCTION	1
II.	BACKGROUND	2
	A. Advantages	2
	B. State-of-the-Art	3
	C. Near Term Applications	4
III.	AREAS OF APPLICATION	7
	A. General	7
	B. Optical Data Bus	8
	C. 10.6μ Optical Heterodyne Detector	12
	D. Tether	17
	E. Optical Phase Front Control	20
IV.	CONCLUSIONS	25
V.	REFERENCES	26

ABSTRACT

Military avionics systems can be expected to benefit from the development of optical data communication systems which use fiber optics. Advantages involving size, weight and freedom from electromagnetic interference can be realized in the near future. Integrated optical circuits can increase the flexibility of such systems as well as perform independent functions in other useful optical devices.

The state of the art of optical fibers and integrated optical circuits is reviewed. A strategy for the development of these technologies is recommended. The optical technology requirements for four advanced military systems involving multiterminal data buses, heterodyne detection, tethers, and optical phase front control are described in detail.

PROBLEM STATUS

This is an interim report; work on this problem is continuing.

AUTHORIZATION

NRL Problem 65N01-31.

Project No. RR014-11-04.

Development of Optical Information Transfer Technology
for Military Application

I. INTRODUCTION

Optical information transfer (OIT) involves the use of electromagnetic radiation in the visible and infrared portion of the spectrum to transmit information. In the general case the information may be in the form of images or coded data and the transfer may be through vacuum or a solid or gaseous media. This report describes the influence of recent advances in fiber optics and integrated optics on the potential of several important OIT concepts.

Fiber optics is receiving a lot of attention at present due primarily to its potential for the telecommunications industry. Fibers with extremely low losses have been reported and the prospect of ultra high bandwidth optical transmission lines with multi-kilometer repeater spacing is a very real possibility. However, the large scale use of fibers for telecommunications is probably at least ten years away. The military on the other hand has very real problems that can be solved with fibers of shorter length and more modest bandwidth. For example, OIT on board aircraft involves fiber lengths of less than 30 meters, and bandwidths less than several hundred megahertz. Since higher losses can be tolerated these applications can proceed without a large amount of fiber development.

The realization of the full military potential of OIT and in particular fiber optic systems will require the development of integrated microoptical circuits.[1] In general this technology will eliminate many problems inherent in bulk optical devices. The optical processing of information with integrated microoptical circuits will minimize the number of optics/electronics interfaces in OIT systems.

The purpose of this report is (1) to analyze the potential of fiber optics and integrated optics for military application, (2) to indicate those general application areas that are closest to benefiting from this technology, and (3) to outline the problems associated with the application of this technology. The next section of this report gives the background of fiber related OIT technology including the state-of-the-art and near term applications. This is followed by a discussion of potentially relevant military application areas. Finally conclusions are drawn about the potential of OIT.

II. BACKGROUND

A. Advantages

The potential advantage of optical information transfer (OIT) systems are well understood qualitatively. Generally the use of fiber optics instead of conventional transmission lines in military hardware should:

1. Reduce by up to a factor of five transmission line system size and weight for conventional information bandwidths. This will make redundant control systems attractive which will increase reliability and battlefield survivability. As the individual fibers in a fiber bundle break, optical systems are expected to experience a gradual degradation in contrast to the catastrophic failure caused by shorts with conventional technology.

2. Eliminate the problems caused by electromagnetic crosstalk and interference which will allow close spacing of transmission lines and operation near radar transmitters.

3. Increase electromagnetic security by eliminating rf emission and making inductive taps impossible.

4. Decrease interface problems, such as ground loops, making modular avionics more attractive.

5. Ultimately lead to ultra-broadband communication bandwidths (1-10 GHz).

It seems probable that integrated optical circuits (IOC) will be used in conjunction with fiber optics transmission systems to overcome some of the difficulties associated with using light to transmit information and may also find an independent role in various forms of optical processing.

The interest in fiber optics and IOC evidenced by the commercial telecommunications industry is clearly motivated by a well defined eventual requirement for ultra-broadband (1-10 GHz) communication systems. When a high degree of multiplexing becomes common, such a broadband capability (evidenced by single mode fibers) will also prove advantageous for future military systems. Over the intermediate term, however, the introduction of this technology will involve application requiring lower bandwidths where the first four listed advantages are important.

These are very real advantages. Nevertheless, since in many cases fiber optics transmission lines will perform exactly the same function as electrical lines, the replacement of conventional hardware will only indirectly lead to an increase in military capability. The introduction of fiber technology may prove difficult since the use of

light to transmit information does represent a complete departure from existing technology and unfortunately, by and large, it cannot be demonstrated at the component or sub system level. For these reasons, special effort will be required to demonstrate this technology and make sure that it is optimumly utilized. Experience will be needed with demonstration models before program managers can be expected to accept this technology.

B. State-of-the-Art

The following conclusions can be drawn concerning the state-of-the-art of fiber/IOC technology from the DoD fiber optics conference sponsored by NELC in March and the Integrated Optics Conference sponsored by the Optical Society of America in February 1972.

1. Glass fiber bundles are available for short links with large numerical aperture and high loss (1000 db/km). The plastic sheathing which is presently used melts near 100° C.[2]

2. Low loss single mode and multimode fibers made from fused silica have been demonstrated with losses less than 20 db/km. These low loss multimode fibers have a numerical aperture of .1. A 1000 ft. bundle has been constructed using these fibers, however, fiber breakage problems have been encountered in cable manufacture resulting in bundle losses nearer 100 db/km. These new fibers need to be much more thoroughly characterized.[3]

3. Silicon PIN photodiode detectors are available and have been used in fiber bundle structures.

4. Silicon avalanche photodiodes are also available but they have not been used in fiber bundle structures.

5. Low cost GaAs light emitting diodes are available in powers of a few milliwatts to ~ 40 mW for more expensive dome structures. These can be electrically modulated to frequencies of several hundred megahertz. The maximum operating temperature does not meet the usual military specifications.[4]

6. Commercially available GaAs laser diodes cannot operate continually at room temperatures, however, GaAlAs heterojunction laser diodes have been operated CW at room temperatures on a laboratory basis.[5]

7. For short length point-to-point applications (< 30 m) requiring modest bandwidths, a combination of GaAs LED, high loss conventional fiber and silicon PIN photodiode can be used today for data communication. The introduction of longer length (300 m) or higher bandwidth (100 MHz) multiterminal multiplexed systems will require more research and development.

8. Thin film waveguides for integrated optical circuits (IOC) have been fabricated by a wide variety of techniques (sputtering, ion exchange, diffusion, epitaxial growth, ion bombardment, etc.) Several types of waveguides have been demonstrated with loss less than 1 db/cm. Techniques to thoroughly evaluate guides with a graded index of refraction have not been developed. For 10.6μ, only waveguides made with GaAs have been investigated.[6,7,8]

9. Two-dimensional waveguides have been fabricated using fiber masking techniques but control of three-dimensional waveguide geometry using electron beam lithography has not yet been demonstrated. The conventional photolithographic techniques do not give sufficient edge definition for optical wavelengths $\lambda \leq 1\mu$.[9]

10. Efficient coupling techniques for coupling in and out of planar waveguides have been developed using prisms, gratings and tapered couplers.[10,11,12]

11. No technique to couple from a fiber bundle to a waveguide has yet been demonstrated.

12. Efficient acoustooptical deflection and mode conversion have been demonstrated in thin films.[13,14]

13. Electrooptical modulation has been demonstrated for modulation frequencies in the kilohertz range.[15]

14. Several forms of integrated laser sources (e.g. dye lasers) have been demonstrated.[16,17]

15. Very recently multimode liquid core fibers have demonstrated loss as low as 13.5 db/km.[18]

C. Near Term Applications

At this time the military research and development program in fiber optics and IOC technology should have three objectives. First, the support of development programs to make near term applications feasible, i.e. the support of fiber bundle technology. Second, the use of the information and technology developed under the first objective to specify a design and build a limited number of demonstration systems to demonstrate advantages 1-4 above. Third, the support of research and exploratory development on a five-year time scale associated with multi-terminal data systems, ultra long links, single mode fibers, advanced multiplexing techniques and integrated optical circuits. Developments in these areas will be combined into advanced optical systems which will make use of the broad band capability of optical fibers and the special advantages of integrated optical circuits.

Development programs for near term application include:

1. The development of a reliable production capability for low loss multimode fiber bundles up to 300 m in length. (Fiber breakage in the bundling process must be reduced.) The full 20 db/km suggested as a goal by Corning is reasonably conservative for military applications 80 db/km would do well for shipboard point-to-point applications and 480 db/km seems sufficient for point-to-point aircraft applications (for bandwidths in the tens of megahertz using PIN photodiodes). The present numerical aperture (NA) of .1 is small causing a collection loss for LED's of up to 20 db, about one half of the total allowable loss. The present fiber configuration is conservative in attenuation (if no significant breakage occurs in the bundle), but less than optimum for LED sources. A compromise to 80 db/km and NA = .45 would be useful for short links. For advanced applications of 25 db/km NA = .2 fiber will be needed. The possibility of using glass or liquid core fibers instead of fused silica should be closely examined. These approaches would allow more flexibility as to numerical aperture, and solutions to the interface scattering and mechanical problems may be easier at the lower manufacturing temperatures. Military sponsored development of many U.S. sources for low loss fibers does not seem cost effective at this time (it would cost too much without large scale company support). The Japanese Selfoc fiber has low enough loss for many military applications, but remains expensive.

2. The physical properties of the low loss fiber optical bundles need to be characterized so they can meet military specifications.

3. Standardized interconnectors and field repair techniques should be developed.

4. GaAs light emitting diode (LED) structures should be developed for fiber optic bundles. The ability of commercial LED's to meet military specifications regarding operation at high temperature should be investigated.

5. Si PIN photodiode structures should be developed for fiber optics cables.

The near term demonstration program should carefully choose systems which can make real use of each of the first four advantages in point-to-point data links. The demonstrations should be run so that accurate comparisons can be made between the problems and advantages associated with using fiber optics and conventional transmission line technology.

a. The size and weight advantage requires several demonstrations associated with different types of avionics systems. Run of the mill avionics, size and weight advantages, have been demonstrated by the replacement of conventional coax cables by fiber bundles on the Navigation Tactical Data System (NTDS). The next demonstration should

involve the wiring of an airplane with point-to-point fiber bundle links.

b. The electromagnetic interference advantage can be demonstrated by the precision time transit interval (PTTI) prototype system development which will use optical links near a high power microwave transmitter.

c. The electromagnetic security advantage can be tested with a secure link program.

d. A development program to demonstrate interface advantages should be chosen. Preferably this would demonstrate the advantage of fiber optics for modular avionics.

A system study is also needed to define requirements for avionics systems. An accurate distribution of transmission cable lengths, bandwidth requirements, the frequency of Y- and T-connectors, the number of switches associated with transmission lines, and topographic information to define the potential for multiplexing for a planned avionics system should result from this study.

Research and development associated with more sophisticated applications of light information transfer techniques will require multiterminal systems and IOC technology.

III. AREAS OF APPLICATION

A. General

Conceivably almost any optical system or function can be envisioned in fiber and/or microoptical form. However, such consideration as need, practicality, power handling capability, limited R&D funding, etc. demand that a few well defined goals be established for the development of military applications.

An important area that is being worked on now is optical data transmission for aircraft. The first generation of this concept is a collection of point-to-point fiber optic links. More advanced concepts involve optical data highways with several random access terminals. Optical links such as these would carry information between computers, sensors, and systems on board an aircraft. They are attractive because potentially they are small, lightweight, free of EMI, free of impedence matching problems, secure, and could lead to modular avionics.

There is another general area where optical fibers can play a key role. This is the problem of tethers for towed arrays, remotely piloted vehicles, wire guided missiles, etc. The need here is for a lightweight data link over very long path length. Development of this area will require the lowest loss fibers and/or microoptical repeaters.

The later generations of both these applications will involve integrated microoptical circuits. This technology is farther off than fiber optics but it is progressing steadily and offers a lot of potential. There are also areas where integrated optics alone are important. These are primarily in the IR and in particular at 10.6μ. These applications are tied to the increased use of CO_2 lasers for military applications. Two general areas seem to stand out. One is optical receivers using heterodyne detection for laser radars and satellite communications links. The requirements for frequency tunable local oscillators and complex array geometries make bulk optical heterodyne receivers extremely complex and sensitive to environmental effects. IOC is a possible solution to these problems. The second area is coherent phase front control. An IOC array of phase modulators could conceivably be constructed to correct a laser beam for atmospheric distortion effects and provide some beam steering.

There are many more areas for IOC application that can be considered such as display, signal processing, upconversion and lightweight atmospheric optical data links. With careful consideration of the state-of-the-art of what can be done in the near future these applications are further off.

Fiber optics communication systems will be limited to the visible and near infrared portion of the spectrum since in that region diode light sources are available, detectors do not have to be cooled and the most likely fiber materials have their maximum transparency.

IOC experimental procedures are usually easier in the visible or near IR, however dimensional tolerances can be relaxed as one proceeds into the infrared.

In the remainder of this section four application areas are considered in detail -- optical data bus, 10.6μ optical heterodyne detector, tether, and optical phased array antenna. These four applications address real problems and include a rather broad cross-section of fiber optics and integrated optics technology.

B. Optical Data Bus

Fiber optics technology offers much promise for data communication systems. Indeed all of the efforts of Bell Labs in this technology are directed towards this application. The military will, however, have special requirements. In general bandwidths will be smaller than those of the telecommunications industry and lengths will be shorter with more input/output terminals required along a transmission line. The principal military application of fiber optic bundles will involve multiplexed transmission lines of moderate length interconnecting avionics subsystems on aircraft or ships. Severe volume weight and mutual interference problems are now encountered when conventional transmission lines are jammed together on mobile platforms.

For moderately large information capacities optical transmission lines in avionics systems will offer advantages involving volume, weight, and complete invulnerability to electromagnetic interference and interface problems, compared to conventional radio frequency transmission lines. Fiber optics bundles need be no more than 1 mm in diameter even for large information capacity. For tens of Megahertz bandwidths, conventional transmission lines often need diameters five times this size. The elimination of ground loops should make modular electronic systems more attractive. The potential advantages of optical transmission systems such as insensitivity to high temperatures, reliability (through redundancy), and lack of fire hazard may also prove important in select cases.

Integrated optical circuits can play a role in such systems by providing remote optical switches which do not require converting the light to electricity and back again. With the advent of spectral multiplexing techniques and higher bandwidths, integrated optical circuits can provide wavelength selective couplers and modulators for laser sources.

The first generation of multiplexed optical data transmission systems should be configured to be adequate for aircraft avionics and the sensor subsystems of small ships. A main transmission line length of 30-60 meters with twelve major input and output terminals (with multiple access) and a 50-150 M bit/sec information capacity (enough to simultaneously transmit more than 1-2 TV images) should cover both applications. Hierarchical access to the bus will be required to hold

coupling losses down. Use of a multimode fiber optics bundle with low cost GaAs light emitting diodes (P ~ 4 mW) and silicon PIN photodiode detectors is the most straightforward approach. Non-reciprocal coupling to the data bus is required to limit terminal loss (see Fig. 1). Such input/output coupling to the main data bus could most easily be provided by fractionation of the fiber optics bundle. Light scramblers would have to be provided between major terminals to make sure all the information was carried on each fiber before reaching the next terminal. Flexibility as to choice to input and output line would best be provided by having a remotely activated optical IOC switch at each of the twelve terminals. In the earliest systems such switching could be done electrically by converting to electricity and back again, and the requirements for low loss fibers and components could be relaxed by providing repeaters at some fraction of the terminals. We will confine our discussion to a design with the minimum of electrical/optical interfaces.

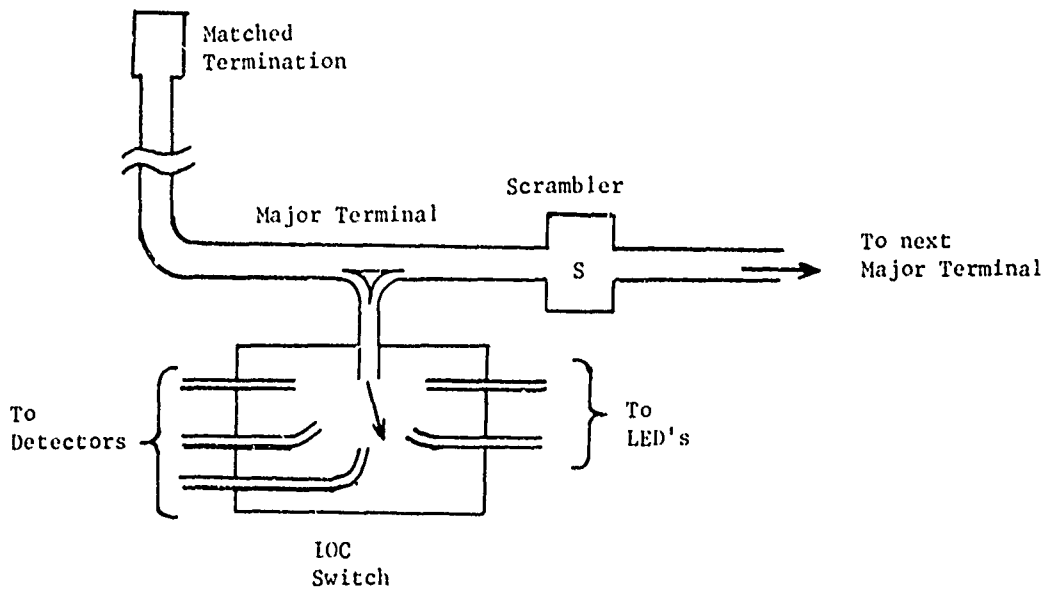

Fig. 1: Optical data bus with fractionation at each major terminal, IOC switch, and scramblers.

A desire for the use of low cost light sources (4 mW LED's) and silicon PIN diodes sets a maximum transfer loss of ~ 33 db for a 120 M bit/sec information capacity. Most of this loss will be associated with splitting off from the main line at the major terminals. This loss must be carefully divided up between components.

The principal components which need development are:

1. Multimode fiber bundles. Sixty meter lengths will be required with reasonable packing fraction losses and transmission losses < 25 db/km so that the loss over 60 m will be ~ 2 db. Numerical apertures of ~ .2 will require special input optics to be developed to keep LED input losses on the order of 6 db. High numerical apertures

should be used with lower bandwidths and/or shorter links. A NA ~ .4, 80 db/km fiber would be useful. Fractionation techniques for the 12 terminals would have to be developed which split off ~ 9% of the fibers (9% is optimum for 12 major terminals.) Fractionation losses will be on the order of 14 db (worst case). Repair techniques will have to be worked out for the bundle and high temperature (300° C) fiber sheathing will need development since the present sheathing melts at temperatures of about 100° C.

2. A light scrambling technique needs to be developed which can spread the light over the entire bundle after each terminal input. A section of bundle with thinner cladding could cause inter fiber coupling or a light pipe integrator could mix up the light. Transferring in and out of an IOC would also accomplish the task. In this case coupling could be accomplished in the IOC avoiding the requirement for fractionation. Losses in the scrambler must be kept to .2 db per scrambler since there are so many of them. Packing fraction losses will be limiting for the case of the light pipe integrator. Present low loss multimode optical fibers lead to high packing fraction losses (~ 50%).

3. LED and silicon photodiode PIN structures which meet environmental specification will have to be developed with useful light concentration. If the scrambler described above turns out to be lossier than ~ .3 db, then avalanche diodes will have to be used. LED's which can be electrically modulated above 100 MHz, PIN diodes, and avalanche diodes which operate at room temperature all can be purchased commercially (without the coupling structure). They work efficiently so that this part of the program does not involve risk.

4. Remotely controlled IOC multiple pole switches will be required to select input and output lines. Overall loss of the fiber/IOC switch/fiber system should be ~ 3 db. A five pole switch is envisioned. Loss will have to be less than 1.5 db per pole to compete with further fractionation of the bundle. Spatial deflection of a beam in a thin film by Bragg scattering from an acoustic wave or an electro-optical structure should be able to provide the switching. Acoustic frequencies approaching several hundred MHz would be required for appreciable deflection. Spatial deflection for single mode beams has been demonstrated with 60% efficiency but no IOC/fiber optics couplers have been demonstrated. Operation of an IOC switch with multimode transmission will represent a special challenge.

Growth versions of the multiplexed data bus will be appropriate for large ships. Here 300 m lengths will be needed with up to 100 terminals. 300 M bit/sec information capacity should suffice. Transmission losses and terminal by-pass losses will now dominate input/output losses so that lower loss fiber bundles, higher power sources, and more sensitive detectors will be needed. For a 300 M bit/sec capability 5 channel spectral multiplexing should be used to reduce bandwidth requirements (see Fig. 2). Diode lasers with a 25 db/km

multimode fiber bundle which has a numerical aperature of ~ .1 would provide the required bandwidth.

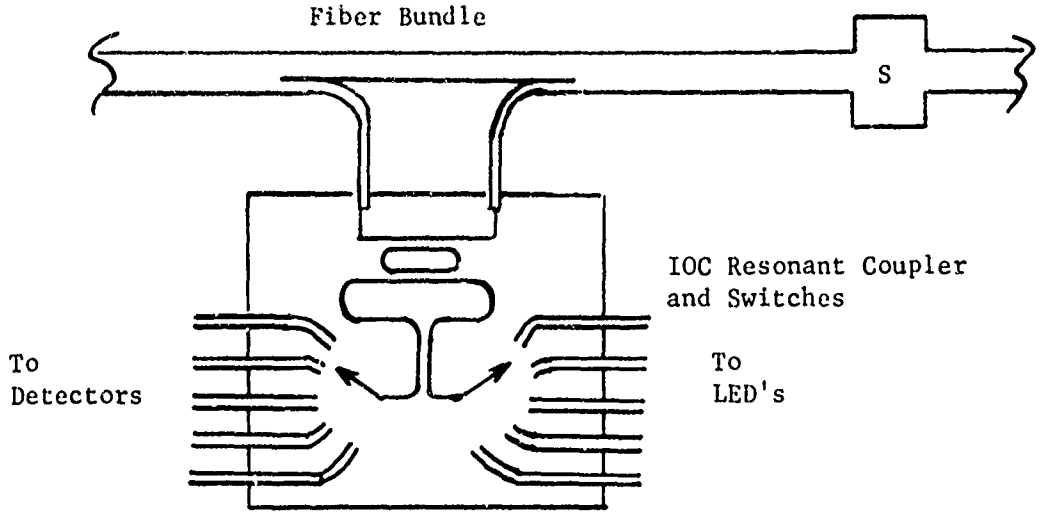

Fig. 2: Major optical data bus terminal with resonant coupler and two IOC switches.

Required developments are:

5. A multimode fiber bundle with 25 db/km losses and a NA of .1 in lengths of 300 m with proper fractionation terminals and reasonable packing fraction losses.

6. Silicon avalanche diode structures with narrow band filters and 200 mW laser diodes in 5 different wavelengths; lower power versions of these laser diodes exist presently on a laboratory basis.

7. Spectrally selective IOC couplers to reduce terminal by-pass losses. This could be performed with resonant coupling between waveguides. These couplers would only select that spectral component required for that terminal. Such a resonant coupler has not yet been demonstrated.

There is a tradeoff between light emitting diode input coupling efficiency and multimode fiber bundle bandwidth (due to ge - metrical dispersion) plus transmission loss which favors high numerical aperture fibers for short links and low numerical aperture fibers for longer, higher bandwidth links.[19,20] This accounts for the differences in fiber specifications for different applications. High NA fibers are presently available but they are made from impure glass and have losses of about 1000 db/km.

An alternate approach to the second generation requirement is to use single mode fibers with IOC repeaters. No spectral multiplexing would be needed. With single mode operation the transmission line will not limit the bandwidth. Efficient coupling into a bundle of single

mode fibers from a single source is probably impossible. Use of a single fiber instead of a bundle looses the advantages of redundancy and the advantage of fractionation. However, single mode operation is more advantageous to IOC device techniques and coupling to the main bus could be performed by passing in and out of IOC where non-reciprocal coupling will have to be achieved (probably using time division switching or magnetic interactions). The repeater will require the development of an optical circulator (see Fig. 3).

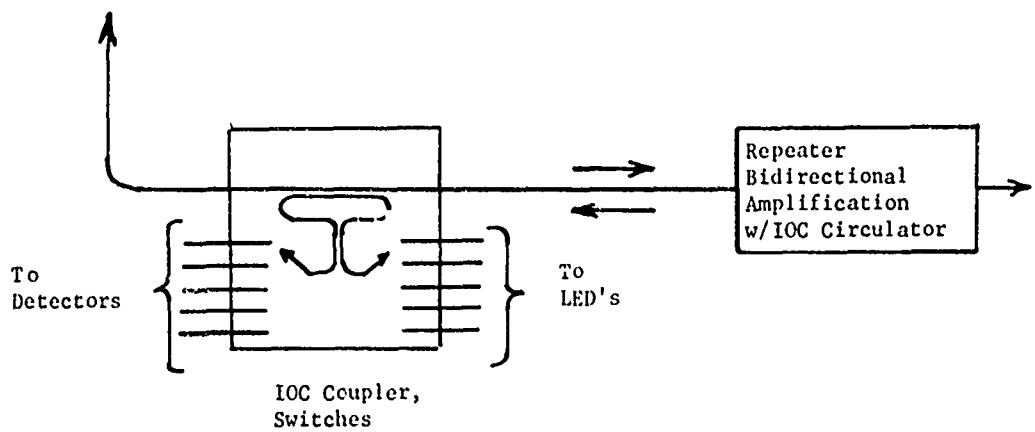

Fig. 3: Single mode fiber optical data bus using IOC terminals and IOC bidirectional repeaters.

The principal difficulties inherent in the development of the first generation data bus involves the design and fabrication of a light scrambler with low enough loss for 12 terminals. IOC functions can be by-passed if need be (at a price) by converting from light to electricity, switching, and converting back to light. The development of IOC devices which will be compatible with this operation represents an unexplored area and an IOC-multimode fiber coupler has yet to be developed.

C. 10.6μ Optical Heterodyne Detector

In the infrared, the heterodyne detection of laser radiation offers significant advantages over direct detection. When a heterodyne receiver is operated with enough local oscillator power, dark current noise and receiver thermal noise can be suppressed even for very wide bandwidth operation. The signal to noise ratio (SNR) can thereby be increased to the signal photon noise limit. Indeed the narrow spectral acceptance of the heterodyne system ($\Delta\lambda/\lambda < 10^{-3}$) is the only way to achieve this result near 10μ due to the large thermal backgrounds which are usually present at these wavelengths.

Both the large thermal backgrounds and the absence of high speed detectors for $\lambda = 10.6\mu$ with internal current gain make heterodyne detection particularly attractive for CO_2 laser systems. Heterodyne techniques would also be advantageous for laser systems operating in the 3-5μ window (DF or CO) since thermal backgrounds are still troublesome and no high efficiency photocathodes exist for those wavelengths.

Heterodyne detection for optical communication systems, optical radar systems, and laser line and raster scanners can significantly reduce transmitter power requirements; however, at this time this detection technique is complicated and expensive. The primary reason is that a laser local oscillator must be provided.

Master oscillator fluctuations and Doppler shifts due to moving targets and receivers will change the frequency of the received radiation. Unless the local oscillator tracks these shifts the detector must be operated with a very wide bandwidth with bandwidth reduction accomplished after the IF channel. Since Doppler shifts for space targets get as high as 1.5 GHz at 10.6μ (150 MHz for airplane targets) detector frequency response and electrical cross talk problems are serious, and large LO power and expensive electronics are necessary with a fixed frequency LO approach.

A far more elegant solution is to frequency shift radiation from the transmitter master oscillator for the local oscillator and make it frequency track the received signal. Indeed this would in many cases be the only way to use heterodyne detection in the mid infrared, since doppler shifts get larger at shorter wavelengths. Even at 10.6μ severe problems have been encountered in developing frequency shifters of sufficient high bandwidth using bulk electrooptical and acoustooptical interactions.[21,22] Interactions which are confined to an optical waveguide may offer the best approach to constructing a practical frequency shifter since higher efficiency can be obtained due to the absence of diffraction effects. The alternative of using $Pb_{1-x}Sn_xTe$ diode lasers for tunable LO power does work but problems in obtaining sufficient output power in a single mode remain.[23]

Integrated optics offers significant potential for the heterodyne detector. With IOC the detector diode, local oscillator source and frequency shifter are an integral unit. This unit is small, lightweight and free of environmental effects such as vibrations. Frequency shifting of the LO should be very efficient with IOC. Packaged in this manner the heterodyne dectector could be stacked into arrays for IR image detection. Present technology concepts for matrix heterodyne recievers to be used with pulsed imaging laser radars have serious image disection problems which could be helped by the introduction of 10.6μ optical waveguides. Photodiodes have not yet been fabricated to be compatible with optical waveguides. There are potential materials compatibility problems and fabrication technique problems, but there are no reasons to assume these are unsolvable. Further there has been no demonstration of an IOC local oscillator at 10.6μ. The easiest approach to this

problem is an external source frequency shifted by an appropriate technique.

A basic heterodyne detector is shown in Fig. 4. A master oscillator/amplifier combination provides the output signal for the system. A part of the master oscillator signal is tapped off to provide a local oscillator source. The local oscillator (LO/Detector (D)) combination is an IOC. The LO is obtained by doppler shifting the master oscillator input. The doppler shifted frequency is controlled by the electronics package which monitors the intermediate frequency at the detector.

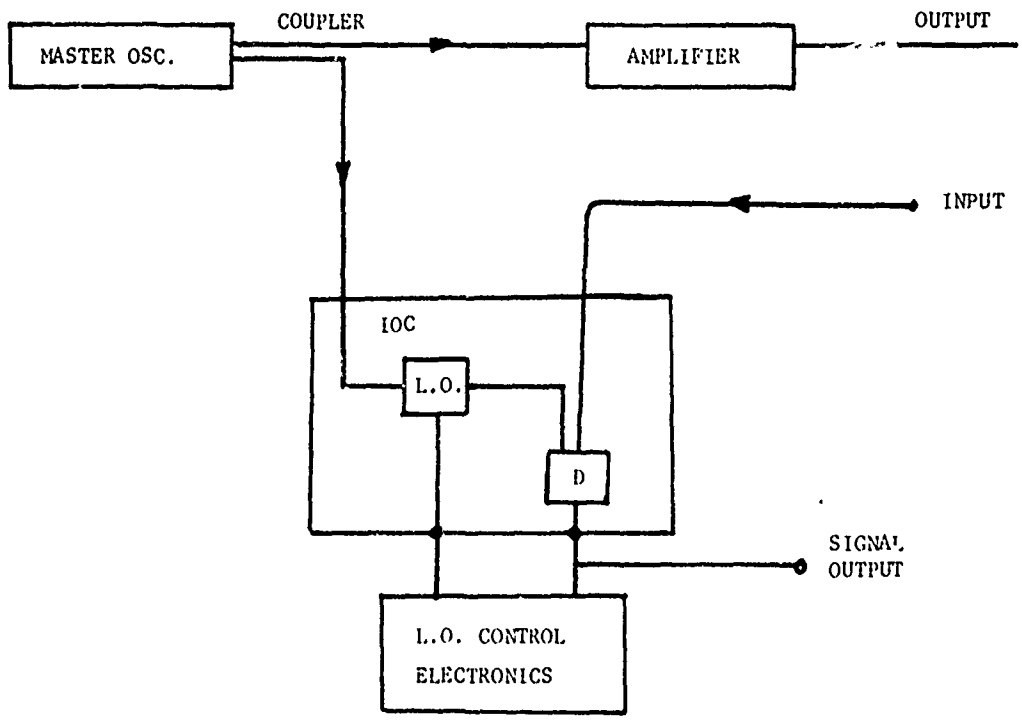

Fig. 4: Block diagram of an optical heterodyne detector where the local oscillator (LO) signal is obtained by doppler shifting a portion of the master oscillator power (see text).

The general problem areas associated with the IOC portion of this detector are (1) low loss 10μ planar waveguides, (2) photodiodes compatible with IOC, (3) 10μ planar waveguide output couplers, and (4) acoustooptic capability in 10μ waveguide.

This 10.6μ heterodyne detector system could be developed in three generations.

First Generation

The first generation device is the IOC LO/detector package for 10.6μ with appropriate input couplers. This is shown in Fig. 5. "End-fire" tapered couplers are used to couple 10.6μ radiation into the IOC. They must efficiently (> 90%) accept the collimated input radiation when incident in a given field of view. The local oscillator signal is generated by using the doppler shifted light from Bragg scattering. The scattering is due to an acoustic surface wave generated by interdigital transducers. LO and signal are incident in a photodiode fabricated on the IOC. The bandwidth of this device should be 1 GHz.

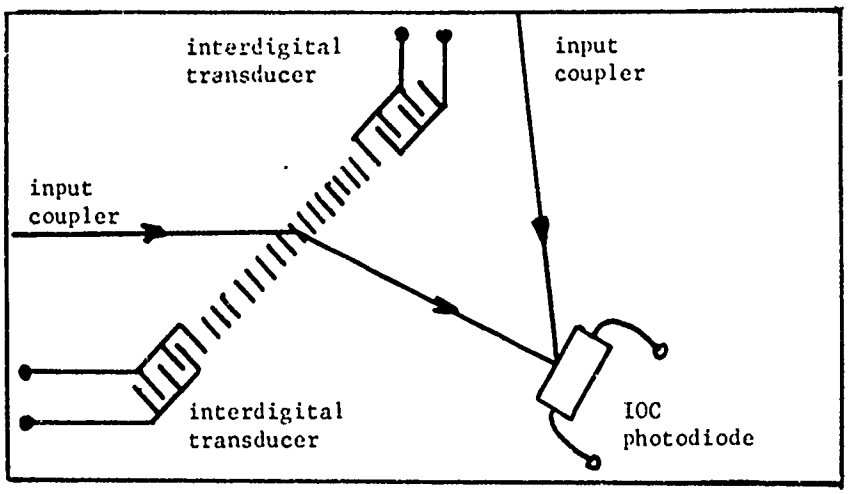

Fig. 5: Basic optical heterodyne unit with Bragg scatterer for LO generation and IOC photodiode.

Second Generation

The second generation device is a linear array of detectors on a common substrate. This is shown in Fig. 6. Four closely spaced input couplers drive four photodiodes. The local oscillator input is from the opposite side of the substrate (---- line) and reaches the photodiode via an end-fire coupler. As in the first generation the local oscillator signal is derived by doppler shifting the input from the master oscillator.

Third Generation

The third generation device is a 2D array of detectors for image detection. This is shown in Fig. 7. A 4x4 array of points in the image plane of an IR receiver is connected to four second generation devices via IR fibers The fibers are short links with low insertion loss.

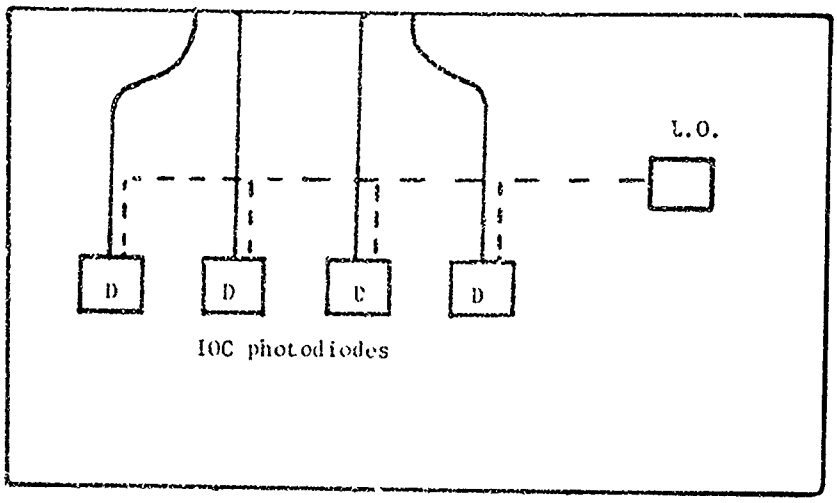

Fig. 6: Schematic diagram of four element heterodyne detector linear array (see text).

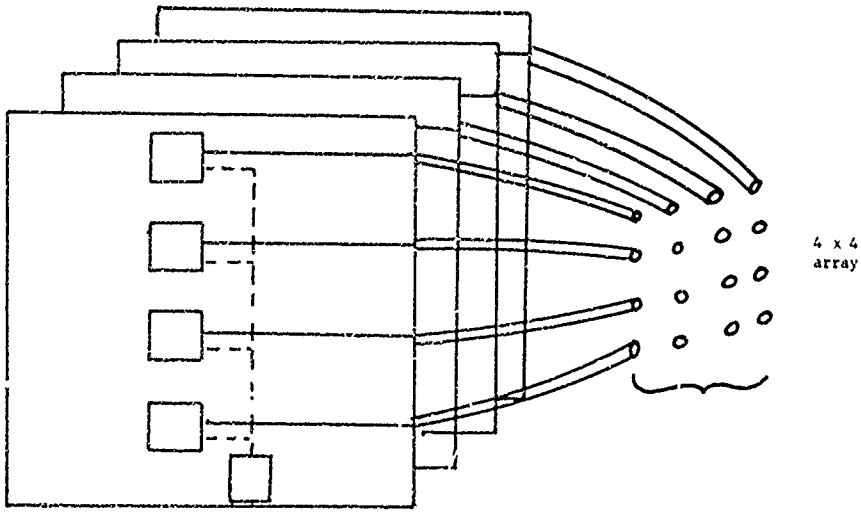

Fig. 7: Four-by-four array of 10.6μ heterodyne detectors using IR fiber optics for element definition.

In order to accomplish the above three generations, the following is required:

1. "end-fire" tapered couplers for 10.6μ
2. photodiode detectors compatible with IOC waveguides for 10.6μ
3. acoustooptic surface wave generation on 10μ IOC for > 90% Bragg scattering into a doppler shifted wave
4. low-loss 10.6μ waveguides
5. "through-the-substrate" coupling of 10μ IOC's

6. waveguide pattern generation for 10μ IOC
7. fiber optics of 10.6μ with < 1 db/cm loss

D. Tether

Tethers are used to tow acoustic detector arrays behind surface ships and submarines. The basic idea is to have the listening device as far away from the noise of the towing ship as possible. Distances in excess of 6000 yards are sometimes used. The cables that are used for this application must be strong enough to overcome the tremendous drag on itself and the detectors. Hence, they are typically 1" diameter cables and when rolled up on the stern of a surface ship are very conspicuous and heavy. Besides providing the towing function for the detectors the cable must provide electrical conductors for power signal transmission. Since the loss per unit length of coaxial cable is a function of its diameter this accounts for the large diameter of the tether. Further, to extend the length of the cable the diameter of the coaxial line must increase to maintain the signal. This requires the diameter of the entire cable to increase and therefore increase the drag. Hence, it must be made stronger. The effect is not linear and represents a major problem. In short, the major problem areas are weight and size of the cable necessary for sufficient data rate handling capability.

Tethers are also used for guided ordnance delivery. A tether is the only possible guidance approach for a long range torpedo such as the Mark 48. Mid course guidance must be provided until the target is within range of the sensitivity limited acoustic sensors carried by the torpedo.

Above-the-water missles, such as TOW (which is primarily antitank), also use a tether as a guidance command link. A wire guided approach has proven far more reliable than the free space IR optical links used in Shillelgh. Tethered links are, of course, not susceptible to jamming. For ordnance applications the data rates are small ~ 10 Kilobit/sec (unless images are transmitted back to the launcher), but the required lengths are several miles. Any new technology which reduces the size and weight of tethers could open up new realms of performance for such ordnance.

OIT is a possible solution to the tether problems. Glass fiber waveguides are not only lighter than coaxial cables, but smaller in diameter. The fiber bundle itself can be less than 1 mm in diameter. This means that the tether can have a smaller diameter for less drag and a smaller weight per unit length. The reduction in overall diameter of an armored cable should be at least a factor of two. The total volume of reeled cable would be smaller and less conspicuous. The introduction of this technology for tether application must await the development of manufacturing techniques to make truly long, low-loss fiber bundles.

This application of OIT is basicly a very long point-to-point communication problem. For acoustic arrays the information capacity requirement is 10 M bit/sec at maximum. Signals from N sensors must be processed and converted to optical signals. At the other end the signals must be detected and demultiplexed into N channels of information.

This communication link requires a low loss very long multimode optical fiber bundle with low numerical aperture (NA) to avoid geometrical dispersion effects which limit bandwidth for long lengths. A numerical aperture of ~ .1 ($\theta_{max} = 6^o$) would be compatible with laser diode sources whose full divergence is ~ 20° and would allow for a bit rate of 10 M bit/sec for lengths up to 3000 m. Laser sources would be needed for efficient input coupling (diode lasers operating CW at room temperature exist at present on a laboratory basis). Assuming a transmission loss of 25 db/km (20 db/km has already been observed in short lengths of fiber with NA = .1). A length of 3000 m represents an overall loss of 75 db. Use of avalanche diode detection would place a minimum requirement on the diode laser of ~ 200 mW output power for a 10 M bit/sec capacity. This should be feasible with development; however, for first generation systems we will specify a bandwidth of 500 kHz which will ease the source requirements to the ten milliwatt region.

If losses are increased, spectral multiplexing will be required to reduce the bandwidth and retain the information capacity. An alternative to spectral multiplexing is the use of a repeater or repeaters along the line to maintain the signal. The repeater would be an IOC to avoid a large package and the extra drag and weight. Also the spectral multiplexing would be accomplished either by separate laser sources into different parts of the fiber bundle immediately followed by a "scrambler" or an IOC with several sources, a spatial mixer, and IOC/fiber coupler. Similar concepts would apply at the receiver end of the line. The components and details of a first and second generation approach to this problem are given below.

The first generation system is shown in Fig. 8. It is a point-to-point optical fiber communication link with 500 kHz bandwidth (S/N = 8). There is a total length of 3000 yds. The transmitter consists of a single laser diode end coupled to the fiber bundle. The receiver is a single avalanche diode. The goals required for this demonstration are (1) continuous low-loss fiber bundle (< 25 db/km) of 3000 m length and NA of < .2 and, (2) minimize the input and output coupling losses by design of an appropriate mechanical coupler. A laser diode with 10 mW of output power could suffice.

The second generation system is shown in Fig. 9. It is an extension of the first generation to 5000 m and 2 MHz bandwidth. The losses due to the extra length are overcome by going to 20 db/km fiber bundles, 1 w laser diodes and 5 channel spectral multiplexing. Five channels are shown each with 400 kHz bandwidth to give the required overall bandwidth. Each transmitting channel is driven by a laser diode. As in the first generation system the transmission line is a

bundle of fibers. This ensures gradual degradation as opposed to catastrophic failure. If fibers break due to vibration, flexing, etc. the transmission losses slowly increase. To accomodate this feature and the frequency multiplexing, the signals from each channel must propagate over the entire bundle cross-section. The fundamental unit indicated by "S" in Fig. 9 is a "scrambler." It takes individual inputs and outputs them over the entire bundle cross-section. This can be accomplished by an IOC or by a section of bundle where the individual fibers are coupled or the use of an optical integrator.

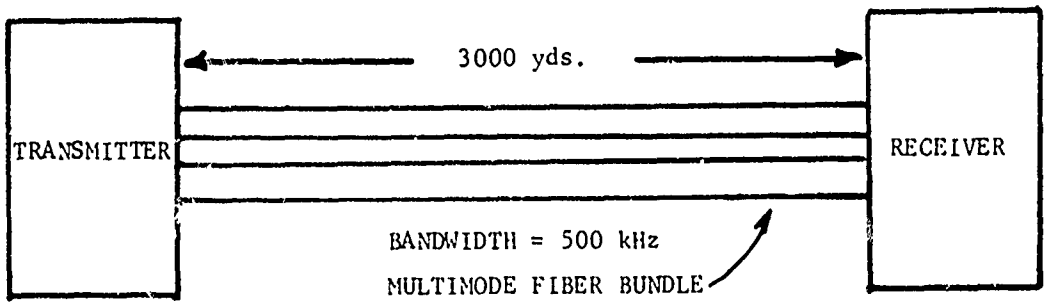

Fig. 8: First generation tether demo.

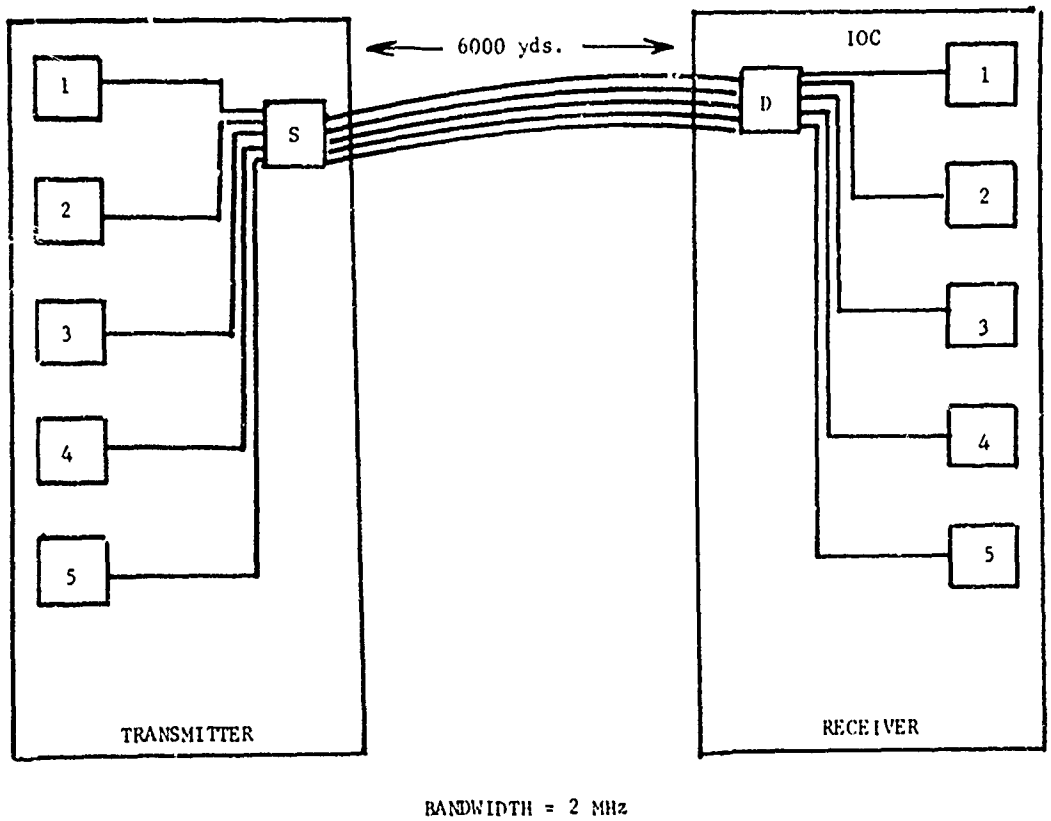

Fig. 9: Second generation tether demo.

The receiver end has the demultiplex function. This is accomplished by an IOC with a waveguide dispersive element which spatially separates the channels. These signals are then detected with avalanche photodiodes.

These two generations of tether systems require the following developments:

1. efficient laser diode/low NA fiber bundle coupling
2. efficient avalanche diode/low NA fiber bundle coupling
3. low loss, < 25 db/km, fiber bundle 3000 meters long, with NA = .2
4. low loss, < 20 db/km, fiber bundle 5000 meters long, with NA = .1
5. CW room temperature laser diodes of 20 mW and 1 W power levels
6. development of spectral multiplex transmitters consisting of the following: five 400 kHz channels with 20 mwatts average power laser diodes, IOC or fiber "scrambler"
7. development of demultiplexing receiver consisting of an IOC with dispersive element and five avalanche photodiodes with a minimum detectable signal of 10^{-12} watts with a 400 kHz bandwidth.

E. Optical Phase Front Control

Electromagnetic phase front control has been extensively used in the microwave region to provide electronically controlled beam steering and beam forming. Indeed the phased array antenna has provided a beam steering agility which would be impossible by mechanical means. The application of such techniques at optical frequencies could alleviate many pointing and deflection problems associated with the use of laser beams.

The usual phased array antenna consists of an NxN array of radiating apertures, each $\frac{1}{2}\lambda$ apart and whose phases and amplitudes are electronically controlled. The minimum beam width from such an antenna is approximately π/N Rad which can be scanned over π Rad. IOC with batch processing could provide the high density of phase controlled apertures required at optical frequencies; but no mater how the phased array was configured beam steering would be limited to NxN resolutions elements. There is a strong trade off between beam size and maximum deflection angle. Even for a large number of phase controlled apertures (10^4) a milliradian beam could only be deflected over 5°.

For high resolution scanning applications, with larger numbers of resolution elements, one would like to design a nearly continuous antenna. The continuous antenna must have capability of varing the phase across the beam in any desired fashion.

Using IOC technology, an optical antenna that will act as a nearly continuous antenna (the number of elements approaching infinity)

is shown in Fig. 10. An input laser is coupled into a waveguide which has electrooptic capabilities. On this waveguide are placed 10 or more electrodes of precisely determined shapes. These shapes are designed to modulate the beam in a precise fashion. In particular, the modulation defined by each electrode is described by a function that is approximately orthogonal to the other nine. By varying the voltage across each of the electrodes, a quasi-continuous phase shift may be impressed on the beam. The IOC will thus act as a nearly continuous antenna, i.e. one which has an extremely large number of antenna elements. Complete phase front control will be limited in this case by the closeness by which the 10 functions chosen approach a complete set. High resolution beam steering however can be accomplished with two modulators.

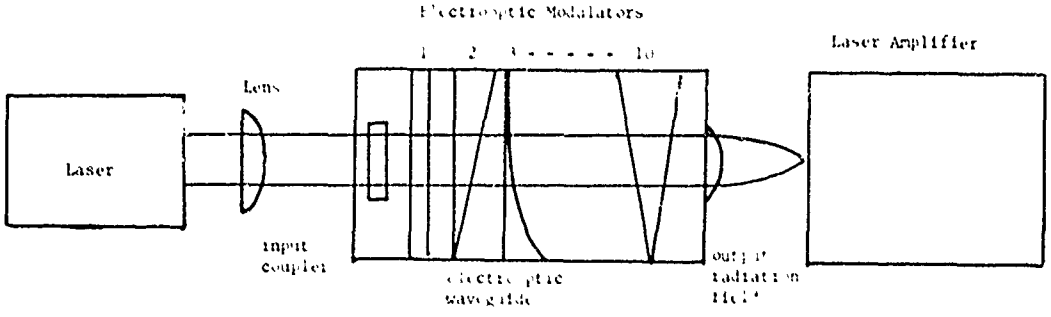

Fig. 10: Schematic diagram of first generation linear phased array.

Acoustooptic scattering of light in IOC is an alternate means available for beam scanning. Through Bragg scattering, the optical beam in the IOC may be directed into the Bragg angle which is (acoustic) frequency dependent. Thus, with careful design continual scanning could be available through this technique. However, there are several disadvantages of this technique: (1) There are problems in launching acoustic-surface waves with varying frequencies in IOC. Very high frequencies are needed for appreciable deflection of visible radiation (this problem is eased for 10.6μ). Good broadband interdigital transducers are not readily available. (2) The angle between the incident light wave and the acoustic wave must be varied as the acoustic frequency is changed for efficient Bragg scattering. (3) The electronics associated with acoustic wave generation is quite bulky and conversion of acoustic power to surface waves is generally inefficient. (4) Electrooptic switching offers much faster switching capabilities. (5) Electrooptically controlled antenna offer better resolution, more freedom for tailoring the output beam to the desired pattern and more compact packaging.

The technology necessary to construct the required IOC is or will shortly be available. Waveguides (planar) for use in IOC presently

have losses of about 1 db/cm. This magnitude of loss is acceptable for the antenna array. Fabrication of waveguide by ion implantation, ion exchange, sputtering and liquid epitaxy has been demonstrated. Passive thin film optical elements such as lenses, prisms, etc. have been fabricated and will find use in the present system (especially beam splitters). Construction of waveguides with 1μ resolution has been demonstrated, and this will enable the construction of the electrode shapes needed to define the modulation function. However, good end-fire couplers have yet to be demonstrated and thin film lasers and amplifiers have only been developed in the visible. Electrooptic modulators have been developed and demonstrated but these do not have the required degree of sophistication. These shortcomings, however, are well within the scope of present technology.

The main use for optical antenna arrays is the control of the radiation field it produces. Two important areas that will use precise beam control are:

1. Display or Scanning Applications

Since the beam position is controlled by the element to element phase shift, the beam maximum can be scanned by electrooptically shifting the phase of the wave front. This allows scanning without changing the mechanical orientation of the antenna, a practical consideration especially important in applications where vibrations are present. The antenna in this case can be rigidly mounted, thus avoiding misalignment problems. Another important characteristic of this system is that the number of resolution spots attainable from this type of system, i.e. continuous type antenna, is quite high because the field may be extremely well defined and controlled. TV quality displays require more than 10^5 resolution elements so that the continuous antenna approach is the only one possible.

2. Beam Control

By varying the phases across the beam in the IOC it is possible to tailor the resulting output beam to any desired form. This is important in beam propagation applications where atmospheric distortion of the propagating beam destroys the beam quality. Atmospheric turbulance limits the beam size to $.5 \times 10^{-4}$ Rad at sea level regardless of beam aperture if phase front control is not employed. Beam control is an important long-range goal for many military laser systems where the effectiveness of the system is reduced by beam distortion. The phased array optical antenna concept, in conjunction with beam feedback (which is sometimes called COAT), makes it possible to continually correct for atmospheric disturbance, thereby, permitting the transmission of optical beams with the desired optical quality ($\sim 10^{-5}$ Rad). Some beam steering capability will also be available in a beam control antenna system. Return beams can also yield image resolution finer than the turbulance limit if phase front control is introduced. Approximately 100 phase controlled antennas (10x10) should be able to

obtain the order of magnitude better beam quality than is generally desired ($.5 \times 10^4$ Rad $\rightarrow$ $.5 \times 10^5$ Rad.) An IOC approach with discreet modulators is also possible, however, the optimum approach may be to use a continuous antenna with the modulators carefully designed to correct for typical distortions. This application can be developed in two generations.

First Generation

The first generation otpical phased array antenna (Fig. 10) is composed of an external CO_2 laser, an integrated optical system which acts as the continuous phased array antenna, suitable output couplers, a single large end-fire coupler, and an external CO_2 amplifier to amplify the antenna field. In the integrated circuit, the waveguide is capable of single mode operation. The IOC is comprised of a system of 10 electrooptic modulators which are capable of continuously adjusting the phase of the waveguide output. The first generation is aimed mainly at beam control

Second Generation

The second stage of development of the phase array optical antenna (Fig. 11) can include the extension of the previously developed 10.6μ continuous antenna array to include more modulator elements (20) for better beam definition, to utilize, if available, thin film 10.6μ light generation and/or amplifiers. These amplifiers can follow the electrooptic modulators on the thin film IOC. The scanning capabilities as well as the beam control capabilities of this system can be demonstrated.

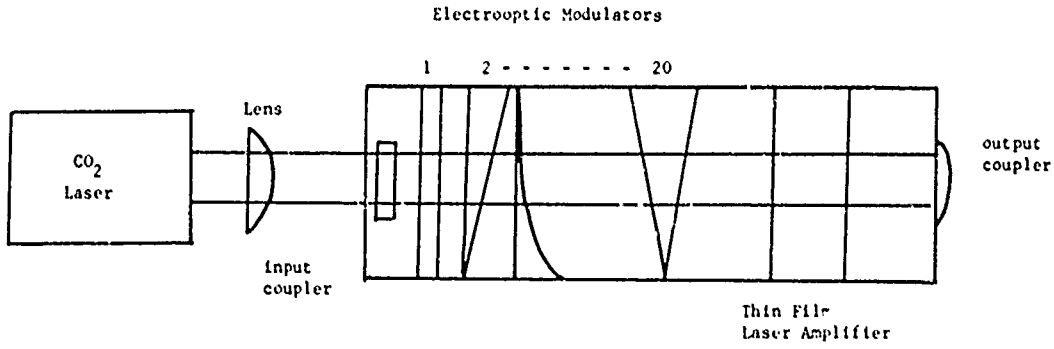

Fig. 11: Schematic diagram of second generation linear phased array including IOC amplifier stage.

Two dimensional phase front control will require a stacking of these elements using fibers to bring the radiation together. The development of these two generations required the following:

1. Construct 3-D 10.6μ waveguides in electrooptic materials, probably II-VI or III-V semiconductors.
2. Construct and demonstrate end-fire couplers for 10.6μ and the visible with 1 db transmission loss and < 10% wavefront distortion.
3. Analyze and determine electrode system that will generate 10 orthogonal modulation functions that approximate a complete set of functions.
4. Construct and demonstrate electrooptic thin film modulation for the visible and 10.6μ.
5. Construct first generation antenna, consisting of 10.6μ CO_2 laser, IOC consisting of system of 10 element electro-optic modulator and end-fire coupler.
6. Study radiation patterns attainable from this system.
7. Construct visible thin film laser.
8. Construct and demonstrate 10 modulator element phase-array visible antenna. This will include a thin film laser, (10) electrooptic modulator, thin film amplifier, and end-fire coupler.
9. Construct and demonstrate 20 modulator element 10.6μ continuous phased array antenna (resolution should be > 500 lines).

IV. CONCLUSIONS

1. Military systems can be expected to benefit from advances in OIT technology. Widespread application of fiber optics communication systems appears likely. The fiber requirements for military applications are less severe than for the telecommunications industry however coupling and switching considerations are expected to be more important. Many military applications can be realized on a shorter time scale.

2. Since low loss fibers have already been demonstrated, application of fiber optics OIT to military systems is only a few years away. Optical integrated circuits would vastly improve the flexibility of fiber optic systems, however since this technology is in its infancy, their use is at least five years away.

3. Many applications of integrated optical circuits are tied to fiber communication systems which will operate in the visible or near infrared. There are however military applications further in the infrared associated with the powerful laser transmitters at 10.6μ where IOC could play an important role.

4. The selection of a limited number of real applications for intensive R&D work will allow fiber optics and IOC technologies to be developed in an optimum manner for military applications.

5. The multiterminal optical data bus, the IOC heterodyne detector receiver, the optical tether and the IOC phase front control device all appear to be good candidates for development.

V. REFERENCES

1. R. A. Andrews, "Optical Waveguides and Integrated Optics Technology," NRL Report 7291, Aug. 1971.

2. D. J. Stigliani, "Light Interface Technology Improvement Investigation," IBM Report NR 215-166, Sep. 1971.

3. R. D. Maurer, "Glass Fibers for Optical Communication," DoD Conference on Fiber Optics Communication, Mar. 1972.

4. W. N. Shannfield, R. L. Williams, F. H. Doerbeck, R. W. Haisly, "Review of Semiconductor Sources and Detectors for Use with Fiber Optics," DoD Conference on Fiber Optics Communications, San Diego, Mar. 1972.

5. B.I. Miller, J. E. Ripper, J. C. Dyment, E. Pinkas and M. B. Panish, "Semiconductor Laser Operating Continuously in the Visible at Room Temperature," Appl. Phys. Letters 18, 403 (1971).

6. E. Garmire and A. Yariv, "Waveguiding in Proton Implanted GaAs," OSA Meeting on Integrated Optics, Las Vegas, Feb. 1972.

7. P. K. Tien, G. Smolinsky, R. J. Martin, "Thin Organosilican Films for Integrated Optics," OSA Meeting on Integrated Optics, Las Vegas, Feb. 1972.

8. T. G. Giallorenzi, E. J. West, R. J. Ginther, R. Kirk, and R. A. Andrews, "Low Loss Waveguides Formed by Ion Exchange in Glasses," to be submitted to Applied Physics Letters.

9. J. H. Harris, "Two Dimensional Optics," OSA Meeting on Integrated Optics, Las Vegas, Feb. 1972.

10. P. K. Tien, R. Ulrich and R. J. Martin, "Modes of Propagating Light Waves in Thin Deposited Semiconductor Films," Appl. Phys. Letters 14, 291 (1969).

11. M. L. Dakass, L. Kuhn, P. F. Heidrich and B. A. Scott, "Grating Coupler for Efficient Excitation of Optical Guided Waves in Thin Films," Appl. Phys. Letters 15, 523 (1970).

12. P. K. Tien and R. J. Martin, "Experiments on Light Waves in a Thin Tapered Film and a New Light-Wave Coupler," Appl. Phys. Letters 18, 398 (1971).

13. L. Kuhn, M. L. Dakass, P. F. Heindrich and B. A. Scott, "Deflection of an Optical Guided Wave by a Surface Acoustic Wave," Appl. Phys. Letters 17, 265 (1970) and L. Kuhn, P. F. Heidrich and E. G. Lean, "Optical Guided Wave Mode Conversion by an Acoustic Surface Wave," Appl. Phys. Letters 19, 428 (1971).

(Page 28 is blank)

14. T. G. Giallorenzi, "Acoustooptical Deflection in Optical Waveguide" submitted to the Journal of Applied Physics.

15. J. H. Harris, "Integrated Optics in Future Fiber Optics Communications," DoD Conference on Fiber Optics Communications, San Diego, Mar. 1972.

16. H. Kogelnik and C. V. Shank, "Stimulated Emission in Periodic Structures," Appl. Phys. Letters 18, 152 (1971).

17. D. L. Keane, N. Holonyok, Jr., R. D. Burnham, P. D. Dapkus, and R. D. Dupuis, "Thin Semiconductor Laser to Thin Platelet Optical Coupler," Appl. Phys. Letters 16, 18 (1970).

18. J. Stone, Bell Labs, E. O. Systems Design, April 1972.

19. D. Gloge, "Dispersive in Weakly Guiding Fibers," Applied Optics 10, 2442 (1972).

20. H. F. Taylor, "Transfer of Information on Naval Vessels via Fiber Optics Transmission Lines," NELC Report, May 1971.

21. J. E. Kiefer, J. A. Nussmeier and F. E. Goodwin, "Intracavity CdTe Modulators for CO_2 Lasers," IEEE J. Quantum Electronics QE-8, 173 (1972).

22. F. S. Chen, "Modulators for Optical Communication Systems," Proc. IEEE 58, 1440 (1970).

23. J. Dimmock, Lincoln Laboratory (private communication).