AD 746744

AGARD

ADVISORY GROUP FOR AEROSPACE RESEARCH & DEVELOPMENT

AGARD REPORT No. 594

on

V/STOL Displays for Approach and Landing

DDC
RECEIVED
AUG 21 1972
A

DISTRIBUTION STATEMENT A
Approved for public release;
Distribution Unlimited

Reproduced by
NATIONAL TECHNICAL
INFORMATION SERVICE
U S Department of Commerce
Springfield VA 22151

NORTH ATLANTIC TREATY ORGANIZATION

DISTRIBUTION AND AVAILABILITY
ON BACK COVER

NORTH ATLANTIC TREATY ORGANIZATION

ADVISORY GROUP FOR AEROSPACE RESEARCH AND DEVELOPMENT

(ORGANISATION DU TRAITE DE L'ATLANTIQUE NORD)

AGARD Report No.594

V/STOL DISPLAYS FOR APPROACH AND LANDING

Details of illustrations in
this document may be better
studied on microfiche

This Report was prepared by a Working Group sponsored by the Aerospace Medical Panel, the Avionics Panel and the Flight Mechanics Panel of AGARD.

THE MISSION OF AGARD

The mission of AGARD is to bring together the leading personalities of the NATO nations in the fields of science and technology relating to aerospace for the following purposes:

- Exchanging of scientific and technical information;
- Continuously stimulating advances in the aerospace sciences relevant to strengthening the common defence posture;
- Improving the co-operation among member nations in aerospace research and development;
- Providing scientific and technical advice and assistance to the North Atlantic Military Committee in the field of aerospace research and development;
- Rendering scientific and technical assistance, as requested, to other NATO bodies and to member nations in connection with research and development problems in the aerospace field.
- Providing assistance to member nations for the purpose of increasing their scientific and technical potential;
- Recommending effective ways for the member nations to use their research and development capabilities for the common benefit of the NATO community.

The highest authority within AGARD is the National Delegates Board consisting of officially appointed senior representatives from each Member Nation. The mission of AGARD is carried out through the Panels which are composed for experts appointed by the National Delegates, the Consultant and Exchange Program and the Aerospace Applications Studies Program. The results of AGARD work are reported to the Member Nations and the NATO Authorities through the AGARD series of publications of which this is one.

Participation in AGARD activities is by invitation only and is normally limited to citizens of the NATO nations.

The material in this publication has been reproduced
directly from copy supplied by AGARD or the Author.

Published July 1972

629.7.058.84 : 629.7.074.6

Printed by Technical Editing and Reproduction Ltd
Harford House, 7-9 Charlotte St, London. W1P 1HD

PREFACE

The AGARD Working Group on "V/STOL Displays for Approach and Landing" jointly sponsored by the Avionics Panel, Aerospace Medical Panel and Flight Mechanics Panel of AGARD has made an attempt to gather information relevant to this study, to discuss this with experts from various NATO countries in the light of the disciplines represented by the three Panels and to draw general conclusions with respect to the man-machine exchange of information in V/STOL aircraft. A great amount of attention was devoted to the problems of V/STOL aircraft operation and to the question of optimal combination of automatic and manual aircraft control with particular respect to the role of the displays. Discussion was restricted to the more realistic and promising possibilities rather than discussing the many theoretically possible cases of V/STOL aircraft development and operation. This presented a particular difficulty since V/STOL techniques are still in an early stage of development even for one V/STOL aircraft (the Harrier) brought into squadron service some time ago. However, the background of experience of the Working Group members - Aircraft System Engineering, Display Engineering, Flight Testing, Human Factor Research and Human Engineering - contributed to the interdisciplinary type of work to be done, which sometimes, however, had to be confined to assessment. It is hoped that the results of this study will support the activities of the three sponsoring Panels in the field of V/STOL techniques and assist future research and development in this area.

COMPOSITION OF THE WORKING GROUP

Mr. Ralf Beyer (Technical Secretary)
Deutsche Forschungs- und Versuchs-
anstalt für Luft- und Raumfahrt e.V.

33 Braunschweig / Germany

Mr. Robert A. Bondurant III
Air Force Flight Dynamics Laboratory

Wright Patterson AFB, Ohio, USA

Dr. Jo H.F. Huddleston
Royal Aircraft Establishment

Farnborough, UK

Mr. Douglas M. McGregor
National Aeronautical Establishment

Ottawa, Canada

Mr. Fred J. Sterk
Nationaal Lucht- en Ruimtevaart-
laboratorium

Amsterdam, Netherlands

Mr. David J. Walters (Chairman)
Ministry of Defence

London, UK

CONTENTS

		Page
PREFACE		iii
COMPOSITION OF THE WORKING GROUP		iii
TABLE OF CONTENTS		iv
LIST OF FIGURES		v
1.	DEFINITIONS	1
2.	INTRODUCTION	1
3.	GENERAL CONSIDERATIONS	3
3.1	Operational Factors and Ground Environment	3
3.2	Vehicle Configuration	3
3.3	Terminal Area Flight Profiles	3
3.4	Guidance Requirements	4
3.5	Pilot Factors	4
4.	THE TRADE-OFF BETWEEN CONTROL AND DISPLAY SOPHISTICATION	5
4.1	Introductory Remarks	5
4.2	Vehicle Stabilisation	5
4.3	Guidance and Control	6
4.4	Principles governing trade-offs	7
5.	INFORMATION REQUIREMENTS	7
6.	HUMAN ENGINEERING ASPECTS	11
7.	SURVEY OF CURRENT V/STOL DISPLAYS	13
7.1	Separated displays	13
7.2	Perspective displays	14
7.3	Combined displays	15
7.4	Comparison of displays and requirements	16
7.4.1	Limitations	16
7.4.2	Attitude Control	16
7.4.3	Height Control	16
7.4.4	Lateral Control	16
8.	ADVANCED DISPLAY TECHNIQUES	17
9.	CONCLUSIONS	18
10.	RECOMMENDATIONS FOR FUTURE RESEARCH AND DEVELOPMENT	19
11.	REFERENCES	21
12.	FIGURES	
13.	BIBLIOGRAPHY	

LIST OF FIGURES

		Page
Fig. 1	: Time and fuel required for several types of final approaches calculated for a P. 1127 V/STOL aircraft (after Ref. 2)	23
Fig. 2	: Typical V/STOL instrument approach paths for the present and future (after Ref. 2)	24
Fig. 3	: Various responses of a simulated pilot/vehicle system for different types of quickened information display (DFVLR)	25
Fig. 4	: Possible relationship between control and display sophistication	26
Fig. 5	: NASA Moving Map Instrument Display (from Ref. 12)	27
Fig. 6	: Two representative attempts to hover over a fixed point using the NASA Moving Map Instrument Display (from Ref. 14)	28
Fig. 7	: NASA Contact Analog Display (from Ref. 17)	29
Fig. 8	: Teldix VTOL Hover Display (from Ref. 19)	30
Fig. 9	: Landing Miss Distances at Touchdown obtained with the Teldix VTOL Hover Display during simulator trials (from Ref. 19)	31
Fig. 10	: Princeton University Integrated Helicopter Display (from Ref. 20)	32
Fig. 11	: JANAIR Integrated Electronic Vertical Display (from Ref. 21)	33
Fig. 12	: Smiths Head-up Display for the Harrier aircraft (from Ref. 22)	34
Fig. 13	: RAE "Guidance" Head-up Display (from Ref. 23)	35
Fig. 14	: RAE "Control Director" Head-up Display (from Ref. 23)	36
Fig. 15	: A possible combined transition display (RAE proposal)	37
Fig. 16	: Display with predominantly numerical indications (from Ref. 16)	38
Fig. 17	: Display with contact analog representation (from Ref. 16)	38
Fig. 18	: Display with contact analog representation (from Ref. 16)	38
Fig. 19	: SAAB Head-up Display (from Ref. 24)	39

1. DEFINITIONS

ADI	- Attitude Director Indicator
AFCS	- Automatic Flight Control System
c_i	- Constants
CRT	- Cathode Ray Tube
CTOL	- Conventional Take-off and Landing
Director Display	- Presentation of a computed command
Flight Path Error	- Deviation of the aircraft from a preselected flight path
h	- Height
h_{HOV}	- Desired Hover Height
$\dot{h}$	- Vertical Velocity
Horizontal Display	- Presentation of x-y plane related information such as position, track, ground speed etc.
HSD	- Horizontal Situation Display
HSI	- Horizontal Situation Indicator
IMC	- Instrument Meteorological Conditions
Quickened Display	- Presentation of a signal containing status, rate and acceleration components
R	- Range
SAS	- Stability Augmentation System
Situation Display	- Presentation of a status
Vertical Display	- Presentation of y-z plane information such as height, bank, vertical velocity and related information such as pitch and incidence
V_g	- Ground Speed
VMC	- Visual Meteorological Conditions
VSD	- Vertical Situation Display
VSI	- Vertical Situation Indicator
V/STOL	- Vertical/Short Take-off and Landing
δ	- Pilot's Control Output
ϵ	- Error
λ	- Position of a Display Element
φ	- Bank Angle
$\dot{\varphi}$	- Rate of Bank
ψ	- Heading
$\dot{\psi}$	- Rate of Turn
ψ_d	- Demanded Heading

2. INTRODUCTION

One of the attractions of the V/STOL aircraft for military application is its ability to operate into and out of tactical sites which may be remote from conventional airfields. Typical of such sites for VTOL aircraft might be a "hole in the wood", a restricted clearing surrounded perhaps by high obstacles. Operational studies have emphasised the sensitivity of effectiveness to detection rate when operating in forward areas and this in turn will force the use of such restricted sites. Indeed, the more high obstacles around, the better from this point of view.

That current V/STOL aircraft can operate into such clearings by day in clear weather has been demonstrated frequently and although the restrictions on flight path imposed by the surrounding obstacles may require careful flying, one does not encounter insurmountable difficulties.

However, to be able to operate only by day in clear weather is in the long run almost certainly unacceptable to military users and it is an unfortunate fact that no true VTOL aircraft has an effective poor weather capability, particularly into restricted sites, at the present time. It is ironic that while the above statement is true, there is a generally held opinion that operation of VTOL aircraft under poor weather conditions should be fundamentally more safe than CTOL aircraft by virtue of the former's ability to fly slowly and stop if necessary. The apparent conflict between these two statements comes from the present state of development of the vehicle as a stable flying machine and the confidence with which the pilot can handle it under difficult conditions. In addition, if the approach manoeuvre is constrained in time by fuel consumption rates or the need to minimize exposure, then there is a further pressure on the pilot forcing him to abandon a cautious stop-and-go approach. There is, in fact, a basic need for a system which will permit smooth, economic approaches to be made to a near-hover point a short distance from the landing site, at a low but safe height and preferably with the vehicle pointing towards the site.

The need for study of approach techniques was recognised by AGARD in 1963 when the Avionics and Flight Mechanics Panels jointly established a Working Group to look into V/STOL Landing systems. The findings of this group were presented in AGARD VLS/65 (Ref. 5) which, while recommending that the pilot's task should be kept as simple as possible and expressing a preference for an approach where only one parameter was changed at a time (stepped approach) did not go into the details of the practicality of providing approach and landing guidance systems. Accordingly a second Working Group was set up in 1965 to study these aspects and their work is reported in AGARD Report 560 (Ref. 1).

While the study reported in Reference 1 concentrated its expertise on the ground aids that may be used, it fully recognised the existence of shortcomings in the display of information to the pilot. The following paragraphs quoted in extenso put the problem:

> "Para 4.2. It is generally agreed that existing displays are mainly inadequate for V/STOL instrument flight and that new displays are required. This is especially true for zero-zero visibility and is true for weather minima of 200 ft and 1/2 mile visibility to a degree dependent principally on the steepness of approach and extent of speed transition which has to be performed.
> In spite of the many studies that are being carried out on new types of display there is limited knowledge on the manner in which information is best displayed to the pilot.
>
> Para 5.4. It is believed that there has been sufficient interest and progress in the development of instrument displays to merit review by an AGARD working group --- the formulation of guidelines for instrument displays should assist in coordinating the various centres of activity on this subject."

It was decided between the Avionics, Flight Mechanics and Aerospace Medical Panels that this recommendation should be followed up by the formation of a small inter-panel and inter-disciplinary group drawn from Canada, France, Germany, the Netherlands, the UK and the USA.

The terms of reference for the group were agreed as follows:

a) To study the requirements for displays to assist the pilot during approach and landing of V/STOL aircraft (including helicopters) in the light of AGARD Reports VLS/65 and 560.

b) To define the principal objectives in designing an instrument display for V/STOL vehicles in the approach and landing phase (including conventional operation) both in IFR and VFR conditions.

c) To survey the present state of display techniques and development trends.

d) To state whether current research and development is correctly oriented to achieve the aims defined in (b) above and to advise on whether increased development effort on displays is required in any area.

e) To prepare, in addition to a Technical Report, an Advisory Report for the Military Committee of NATO.

The Working Group met six times, once each in the Netherlands, North America, the UK, Germany and [illegible] in France, and consulted personnel from both research establishments and industrial organisations. They were assisted in this work by an extensive preliminary survey carried out by the Technical Secretary, before the group was convened, in which he reviewed some relevant activities in the various participating countries. He found that a very considerable amount of work was being conducted in the broad field of aircraft displays but very little of it was aimed specifically at the V/STOL case. Also, work appeared to be directed more to short term solutions for specific aircraft than to establishing fundamental requirements (ie it was resulting in empirical solutions rather than an understanding of underlying principles). Again, for general application, there was a lot of work being carried out on novel display techniques and, in general, these seemed adequate to meet any special V/STOL requirements. This is not to say that further advances in engineering techniques are not desirable; brightness, contrast, colour, size and cost could all be improved but there are no peculiarly V/STOL aspects that would force development along any particular path.

The Technical Secretary's report showed that among those surveyed there was a consensus of opinion in favour of future work having the following order of priorities:

1. Systems Theory and Design	- Analysis and integration of subsystems such as stability augmentation system, pilot, display etc. with respect to the environment and to the mission
2. Human Factors and Human Engineering Research	- Determination of the pilot's response characteristics and their application to display design
3. Operation	- Accumulation of flight experience and development of practicable flight procedures
4. Technology	- Development of the engineering ability to produce a display

In its subsequent studies the Working Group has attempted to follow these priorities. The result is this report, which does not dictate exactly how such displays should look. It is hoped, however, that the report will be of benefit to those who have to design V/STOL displays in the future.

Finally, this report indicates a number of areas where further research is needed, or where the current research effort needs increasing. Future action along these lines is, of course, a matter for individual countries but the existence of a central statement of need could contribute greatly to international collaborative projects whether bi-lateral or multi-lateral in nature. Recommendations along these lines will be made by the Working Group to the NATO Military Committee in the discharge of its terms of reference.

3. GENERAL CONSIDERATIONS

The design and development of display systems for V/STOL aircraft terminal area operations require consideration of many factors outside the display technology field. As a minimum, these considerations include operational factors, ground environment, vehicle configuration, terminal area flight profiles, guidance requirements and pilot factors. This section of the report will discuss these aspects of the problem as viewed by this Working Group.

3.1 Operational Factors and Ground Environment

Operational requirements are generally a function of the mission, role and class (ie fighter, transport) of the aircraft. All tactical military aircraft, however, should be capable of operating under adverse weather conditions to be truly effective. The operational effectiveness of V/STOL tactical aircraft will be strongly influenced by weather conditions due to the nature of their operational employment. They will very likely be deployed to dispersed sites and/or operated into, and out of, remote forward sites having a minimum complement of ground aids to assist in conditions of low visibility. Weather criteria for remote area operations may be different from those for main base operations. Under combat conditions adequate visual cues can not necessarily be assumed following breakout through cloud cover nor will the pilot have high intensity lights, runway markings or runway contrast with surrounding terrain available as cues to indicate his desired landing point. Landing sites may be camouflaged and operating under black-out conditions. Approaches may have to be made over enemy controlled territory and unfamiliar terrain. As a result, the pilot must be able to fly under instrument conditions throughout almost the entire approach profile to exploit fully the operational advantages of V/STOL tactical aircraft.

The nature of the operational employment of V/STOL tactical aircraft will also significantly influence the mission-related avionics equipment which will vary widely from austere to highly sophisticated depending upon the aircraft's role. Maximum utilization of this equipment to accomplish terminal area and IMC operations is necessary to minimize the additional cost and weight of special purpose components and systems. The level of maintenance support available at forward and remote operating sites will impose higher system reliability requirements than would normally be required for main-base operations. These factors emphasize the need for easily maintained, highly reliable avionics and display systems for V/STOL tactical aircraft.

3.2 Vehicle Configuration

There are currently many V/STOL airframe-propulsion configurations in various stages of development and production. These configurations include rotary wing, lift fan, lift jets and many others. The primary emphasis of this Working Group's activities has been concerned with aircraft having an inherent capability to hover and manoeuvre at low speed, since this is a limiting design case. STOL aircraft carrying out steep approaches come somewhere in between VTOL and conventional aircraft in terms of system design requirements for terminal area operations. The reason STOL aircraft are flown at low airspeeds on approach is to keep the touchdown velocity low and, hence, the ground roll short. As a consequence of these low speeds, natural aerodynamic damping of body axis movements is reduced and the effects of wind shear, gusts and cross winds will become more pronounced in the final approach and landing phase than for conventional aircraft.

In terms of display system design, vehicle configuration primarily affects the information requirements necessary to control flight path, configuration changes and the propulsion system. In aircraft in which configuration changes or modulation of the propulsion system are used to achieve direct lift control, operation of these functions becomes a primary, rather than a secondary, control task and must be treated accordingly in the design of the display system. This impacts on fail-safety requirements, location of display elements, and the integration of the display of these control functions with other primary control functions - particularly in command or director display modes.

3.3 Terminal Area Flight Profiles

Flexibility is the key to conducting tactical V/STOL terminal area operations under the conditions discussed above. The capability to hover and manoeuvre at low speeds provides this needed flexibility in establishing terminal area flight profiles. Under IMC conditions, the pilot is no longer restricted to flying fixed paths through space based on runway headings, but rather he can establish his best landing profile based on a knowledge of aircraft limitations, tactical and environmental conditions and his present position with respect to the desired landing point. Given adequate aircraft characteristics this inherent capability to perform steep, curved, decelerating and omni-directional approaches is dependent, nevertheless, upon the pilot having appropriate information displayed in a manner that allows him to perform these manoeuvres with confidence. Pilot confidence is probably the most important single factor in achieving operational all-weather landing.

Current piloting techniques during instrument flight conditions require long straight approaches for acquisition and tracking, and are time consuming. Fuel consumption data from trials with the P.1127 for several types of instrument approaches from just prior to acquisition of glide path, to touchdown, are compared in Fig. 1 (Ref. 2) with a visual, turning approach to a vertical landing. It can be seen that there is a significant saving in time and fuel for the visual approach compared to the simulated instrument approaches. To conserve fuel and minimize exposure time in V/STOL operations, IMC landing profiles similar to those illustrated as future procedures in Fig. 2 (Ref. 2) must become operationally feasible. In VLS/65 it was assumed that the glide path would be a straight line both in the vertical and horizontal plane during

the instrument final approach. However, even in 1964, there was evidence that future requirements might include the capability to fly a curved path in both dimensions. Therefore VLS/65 recommended:

> "A system which provides the aircraft with continuous three-dimensional information concerning the aircraft location, associated with an airborne computer which can be programmed for any desired flight path, would be preferable to a system providing a rigid glide path."

Given such a guidance system the display requirements to achieve versatile VMC type profiles under IMC conditions, indeed, are not readily apparent, but the discussion and analysis of later chapters attempts to shed some light on these requirements.

3.4 Guidance Requirements

Information requirements for V/STOL approach and landing are discussed in Chapter 5 of this report. Some comment is in order, however, on guidance concepts which may be employed to satisfy these information requirements. The location and tactical environment of many V/STOL operational sites may preclude the installation of large, permanent ground guidance systems and the alternative, of installing sophisticated airborne guidance systems in all aircraft, is extremely expensive and imposes additional power, weight and maintenance requirements.

Sub Group 7 of the NATO Air Forces Armament Group (NAFAG) is reviewing military requirements for tactical ground guidance systems and is conducting evaluation tests on several portable light weight systems which are being developed by several manufacturers in the United States, Great Britain, Germany and France. These include MADGE, SETAC, TALAR and SYDAC, and it is anticipated that requirements for an interim and/or long term tactical guidance system will result. Although V/STOL and helicopter guidance requirements are being considered in these investigations, primary consideration is being given to conventional aircraft requirements for the interim system.

The All Weather Operations Panel (AWOP) of ICAO and Special Committee 117 of Radio Technical Commission for Aeronautics (RTCA) have recently made recommendations concerning the need for a new guidance system that considers V/STOL and helicopters requirements. RTCA investigated the development of a precision guidance concept and associated signal format for an approach and landing system for civil and military users. The recommendations are reported in Ref. 3. The AWOP also recommended the development of a new international non-visual approach and landing guidance system for civil aviation (Ref. 4). Developments resulting from these recommendations would not necessarily result, however, in portable systems satisfying tactical V/STOL operational requirements.

V/STOL aircraft have guidance requirements that are essential to exploiting their unique (ie low speed, direct lift control) flight characteristics. The operational capabilities of V/STOL aircraft can best be realized if the pilot is able to use the inherent wide flexibility of the aircraft under IMC in much the same manner as he does under VMC. The low speed flight characteristics enable the pilot to control the aircraft based on its existing flight situation with respect to the desired landing point without the need to correct back to an arbitrary flight path (except under highly congested air traffic control conditions). It appears that the system will have to provide precise position and rate information relative to the desired landing point. Range and range rate information is essential if optimum decelerating profiles are to be achieved. These could minimize fuel consumption but, more important, along with a knowledge of surrounding terrain and winds, will permit V/STOL IMC landings in very low visibility conditions.

As pointed out above, precise position information relative to a desired landing site can be of more importance in V/STOL landings than position information relative to an arbitrary flight path. In the simplest case, range, bearing, and barometric altitude (with reference to the landing site) can provide this position data. Many more sophisticated means of deriving this information are currently under development. NAFAG Sub Group 7 will be considering such systems as long range solutions to tactical guidance requirements. V/STOL guidance requirements (accuracies, range, coverage, etc.) should be established, verified through flight test, and specified as part of the general requirements for any new tactical guidance system.

3.5 Pilot Factors

A significant factor to be considered in the design of a control-display system for any new aircraft is the role of the pilot in the system. This issue becomes of particular concern when automatic versus manual control trade-offs are being considered. The need for automatic assistance and the trade-off between control sophistication versus display requirements are discussed in detail in Chapter 4. Several general points, however, need to be made about pilot factors in system design. In general, pilots make poor substitutes for servo actuators and, if they can be unburdened from such routine control tasks, have more time available for management of critical functions. On the other hand, as automaticity increases, the pilot's task becomes one of systems monitoring, and he may not be able to stay sufficiently alert under routine operation to take over manually in case of systems failures at critical phases in the mission. These points were also made in Ref. 2:

> "The V/STOL aircraft will add complexity of operation for the pilot. Also, the need for steep, curved flight paths in a dense traffic environment (or due to operational requirements-editorial comment by Working Group) in very low visibility conditions will place demands on the pilot that will require some degree of automation of operation and control of the aircraft and of its guidance from cruise to landing. The pilot will become a manager and monitor of system performance and, of course, will remain the decision maker. The decisions the pilot makes, however, may be more difficult as a manager and more critical in timing in an emergency situation inasmuch as displays of today require interpretation and are not suitably integrated. The pilot may not be able to stay sufficiently "alert" under routine operations while monitoring with abstract displays unless he plays an active part in the control of the aircraft. On

the other hand, vastly improved displays may provide an answer."

4. THE TRADE-OFF BETWEEN CONTROL AND DISPLAY SOPHISTICATION

4.1 Introductory Remarks

As was pointed out in Chapter 3, V/STOL aircraft have proved to be marginally stable and difficult to fly at low airspeeds. Successful transitions from aerodynamic flight to a hover and landing do not present operational problems as long as such missions are flown by experienced and well-trained test pilots. Ultimately, V/STOL aircraft have to be flown operationally by less experienced pilots. These will have to receive special training due to the varying method of control during a transition from aerodynamic flight to a hover. On the other hand, VTOL aircraft offer advantageous direct control of vertical acceleration thus allowing immediate corrections of height errors. This can enhance the guidance stability with respect to the demanded flight path compared to most conventional aircraft where height errors are corrected indirectly by changing elevator angle and engine thrust.

Studies conducted in flight so far have been primarily concerned with stability and control examinations under VMC. Far fewer studies of this kind have been undertaken for manual flying under IMC which is understandable because even for conventional aircraft true all-weather instrument landing capability is just beginning to become a reality as a result of fairly sophisticated automated control systems. Another reason for the majority of the research being done under visual rather than instrument conditions is that airborne experiments are much more easily performed using the real world cues. Also representative displays are not usually available and the researcher is well aware of the deficiencies of standard instruments because of all the controversy over the years regarding V/STOL display requirements. As long as V/STOL aircraft steep-angle approaches, including vertical landings, are in the exploratory stage with respect to all-weather landing capability, appropriate displays can not be developed adequately until a basic understanding of what is to be controlled, operated and monitored has been established. Therefore, only fairly general statements can be made on the trade-off between control sophistication and display requirements.

4.2 Vehicle Stabilisation

Some V/STOL aircraft have stability characteristics which allow the aircraft to be flown manually with a minor degree of autostabilisation, or no stabilisation at all. The question is, however, how much the operation of a V/STOL aircraft without autostabilisation increases pilot workload compared to that of flying with stability augmentation. If there is a significant increase of pilot workload it should be accounted for when defining the pilot's flight control tasks and in a wider sense the total mission concept. To be able to assess the cost-effectiveness of autostabilisation, it is felt that quantitative measures should be developed to show what amount of the pilot's attention capacity is absorbed by manual aircraft stabilisation.

At this point the optimum use of human capabilities should be reconsidered. Obviously the primary task of the pilot is to perform a particular mission and not to maintain a particular vehicle status. Therefore the pilot's attention should be devoted to the mission tasks primarily and the secondary task of vehicle stabilisation should be automated as necessary. Stability augmentation systems involving appropriate sensors, computers and control surface or nozzle actuators are certainly within the state of the art. However, considerations of reliability and adaptability to failures or sudden changes of operational conditions can influence the assignment of vehicle stabilisation tasks to the pilot or to the stability augmentation system.

In cases where only limited automatic stability augmentation is available or where the pilot has to take over in an emergency manoeuvre, quickened displays may be a better answer than pure situation displays which are likely to be inadequate for stabilizing tasks. Quickened information is derived from the combination of status, rate and acceleration components of a parameter and is displayed as a composite signal to the pilot. By this method the pilot is relieved of the extremely difficult task of manifold visual differentiation of situation information and mental determination of optimal control movements.

To illustrate the effects of quickening in a director display reference is made to Fig. 3 which is a simplified example of the control of an aircraft turning in level aerodynamic flight. The pilot and display are represented in the model as a simple gain. Using this simple pilot model it is assumed that the pilot can concentrate on a single tracking task of slow response characteristics alone, which is not necessarily true in practice. The pilot's output, δ, controls the aircraft in roll. The output of the first integrator of the aircraft model represents the roll rate and the negative feedback of this integrator accounts for the damping of roll-motion. The output of the second integrator then represents bank angle, φ, which causes a proportional rate of turn, $\dot{\psi}$, (assuming no sideslip). The output of the third integrator is aircraft heading, ψ, which can be controlled to satisfy a heading demand ψ_d using multiple feedbacks to the display. The resulting output is a composite signal of the form

$$\lambda = \psi_d - \psi - c_1\dot{\psi} - c_2\ddot{\psi} \tag{1}$$

By appropriate selection of c_1 and c_2 various types of responses of the system can be achieved in order to null the heading error

$$\varepsilon = \psi_d - \psi \tag{2}$$

Fig. 3a-c show some responses obtained by simulation for varying values of c_1 and c_2. For $c_1 = c_2 = 0$ there is only negative feedback from output to input which results in instability of the system. The traces are therefore not shown in Fig. 3.

For $c_1 = 0.2$ and $c_2 = 0$ (Fig. 3a) damping has been introduced into the system. In most linear systems a rate feedback term introduces damping and this is seen in Fig. 3a where $c_1 = 0.2$. However, at this value of c_1, oscillation is still present which makes control difficult for the pilot (highest rms-value of

pilot's output and highest number of stick reversals compared to Fig. 3b, c), but the rms-value of the error at the system output is smallest for the example shown in Fig. 3a. For $c_1 = 0.2$ and $c_2 = 0.1$ (Fig. 3b) the feedback of the second derivative of the system output ($\dot{\varphi}$ or $\ddot{\psi}$ respectively) has increased the damping and lowered the frequency of oscillation. Control is less difficult for the pilot as indicated by the small number of stick reversals required and the smaller rms-value of the pilot's output. The vehicle is less responsive, however, and the rms-value of the error at the system output is larger than in the previous example.

For $c_1 = 0.4$ and $c_2 = 0.5$ there is no longer an oscillation in the system. In this example, control is apparently least difficult for the pilot as only one stick reversal is required and the rms-value of pilot's output is smallest with respect to the previous cases discussed. However, the vehicle is even less responsive and the rms-value of the error at the system output reaches a high level.

From the preceeding figures it is apparent that pilot's activity and the corresponding control errors have some form of inverse relationship which is quite natural. By means of a quickened display of information it is possible to select a certain ratio of pilot's activity / control errors as long as human capabilities are not exceeded. More importantly the quickened display of information can introduce an artificial stability into systems of natural instability by provision of appropriate feedback loops. These loops can be designed to take the characteristics of human control into account, which helps to maintain the man in the loop if it is considered necessary.

Besides the characteristics of quickened displays discussed above, the loss of situation information in the display has to be considered when introducing quickening. In some cases only a slight amount of quickening (small values of c_1, c_2) is required to obtain satisfactory results and then this effect is not too significant. However, if a large amount of quickening is applied, two displays are required, one representing quickened (command) information and the other situation information. Otherwise the lack of situation information may lead to a condition in which the command display shows all commands satisfied while the aircraft actually flies in an unacceptable or dangerous situation which can not be detected by means of the display.

For a strictly analytical development of quickened information displays the entire dynamic characteristics of the pilot would have to be known. It is believed that the determination of such sophisticated models may be very expensive and it would probably always be easier to design fully automatic control systems. It would appear, however, to be more promising to restrict the model describing the pilot's response to lower frequencies only and to recognize and to account for the variability of the display design due to this simplification. A restriction to frequencies well below 1 Hz appears to be quite realistic for actual flying tasks. It is felt that the application of such simplified models could increase the cost-effectiveness of quickened display design by allowing predictions of important parameters regarding specific tasks rather than continuing the predominantly empirical optimination of quickened displays.

4.3 Guidance and Control

Automatic stability augmentation for V/STOL aircraft is well within the state of the art and has proved to be cost-effective. Automatic flight control of V/STOL aircraft is probably also within the state of the art though some subsystems, in particular sensors and guidance equipment, need some refinement. However, fully automated flight control of V/STOL aircraft can not be considered to be cost-effective at present. While the problem of vehicle stabilisation is more or less apparent in all phases of flight, guidance equipment tends to be mode-specific. To be cost-effective in computer capability, power management effort, maintenance etc. such equipment should be designed to be usable in many phases of flight. The problem is most apparent when raw information is displayed by conventional display techniques. It is less predominant if sensors and indicators are separated which allows the indicators to be flight-phase selected through computer programs to make them useable for different purposes. In this respect the best solution would be the use of electronic displays, the symbology, information content and dynamic characteristics of which can be programmed to match the particular requirements of each phase of flight. Using the display device as a multi-mode indicator valuable instrument panel space is preserved by reducing the number of discrete indicators. Production, maintenance and repair can also be simplified by having standard display devices only rather than a fairly inhomogenous instrumentation.

In general, it is believed that the problems mentioned above can be solved best by using standard computer controlled display devices and giving particular emphasis to standardization of future hardware development and to display software generation. The increasing amount of computed information compared to raw information to be displayed and the predominance of electronic equipment add to this development trend.

With respect to automatic guidance, the resources of the human being (flying ability, training, discipline), the possible refinement of operating procedures and available display technology appear adequate to eliminate complete automation of V/STOL aircraft guidance from serious consideration in the near future, to our economic benefit. Quite substantial efforts are, however, required to utilize these resources efficiently. The greatest problem appears to be the lack of knowledge about the pilot's information requirements which are considered to be the key to future display development. Input requirements exist in general for fully automatic flight control. Information requirements for manual control, however, have to be derived more empirically because of the limited knowledge of the pilot's behaviour in a multi-task situation and his ability to adapt to the unexpected.

A significant increase of ground-based equipment giving navigation information and performing data processing will be necessary for automatic guidance and control during approach and landing as compared, for example, to a GCA (Ground Controlled Approach) manoeuvre. It is questionable whether adequate equipment can be provided for this particularly at those places where the take-off and landing characteristics of a V/STOL aircraft are most useful. On the other hand, operational experience has shown that steep descents to a specific end-point are difficult to fly without some degree of automation if a specific profile of transition or deceleration is demanded.

4.4 Principles governing trade-offs

The display requirements for V/STOL aircraft are dependent on the complexity of the flight manoeuvres required and on the degree of automation available aboard the aircraft. However, automation and the quantity of information displayed are not inversely proportional. This is due to the fact, that automation can reduce the number of control displays without significantly changing the number of situation displays required to observe the progress of the automated control functions and to monitor the flight condition with respect to mission requirements and safety margins. The degree of automation is dependent, however, on the overall cost-effectiveness to be achieved. Two questions appear to be most important: (i) What can be automated within the state of the art, given considerations of cost, payload and operational environment? (ii) How much of the pilot's attention capacity is required for tasks which can not be automated efficiently and where is it possible to save that amount of attention by appropriate automation of other functions? It is believed that for vehicle stabilisation both questions can be answered in favour of automation. With the aid of completely automated stabilisation systems it should be possible to reduce the influence of pilot factors on flight accidents remarkably. It would be interesting, however, to know how much instability of the vehicle contributes to the total number of flight accidents. The remaining accidents which are not due to inadequacies of manual stabilisation of the vehicle (inner loop) may have their roots in the imperfections of the technique of manual vehicle guidance (outer loop). However, the same degree of automation as for vehicle stabilisation, ie ultimately complete automation, is not considered to be cost-effective and feasible for guidance of V/STOL aircraft. On the other hand, pure manual guidance of the V/STOL aircraft can restrict the operation of the vehicle to fairly conventional approach techniques to avoid flying risks. If, therefore, the inherent flexibility of V/STOL aircraft is to be utilized, some combination of manual and automatic guidance will be required.

It is difficult, if not impossible, to make any statement about the appropriate amount of manual and automatic guidance to achieve a specific performance without exact knowledge of the vehicular characteristics, the type of mission to be flown, human limitations with respect to the flying task, and the difficulty of cooperation between the pilot and the automated system (distribution of authority etc). However, for a given combination of these factors it is obvious that the total of manual plus automatic control must add up to 100%. It must not be assumed that a pilot always has the ability to provide the full 100% of control, even with extensive training, or with elaborate displays. In such a case the aircraft is unflyable without some minimum amount of automatic control (typically inner-loop stability augmentation). Experience with numerous experimental V/STOL aircraft indicates that for operation in IMC this would be a realistic case and the subsequent discussion is based on this assumption.

In order to perform his share of control the pilot must be given the necessary information and one can therefore draw curves of pilot acceptability levels on a plot of display sophistication against control complexity (Fig. 4).

For the example chosen, these curves do not reach the axes in either direction. That is, as discussed above, there is no fully manual control solution however many displays are provided, and although it should always be possible in theory for the curve to reach the abscissa (fully automatic flight), in practice the pilot will insist on having some situation information available with which he can follow the progress of the flight.

Figure 4 presents only a generalized case since it is not possible to progress uniquely along the axes. For the purpose of the illustration one can assume that control sophistication starts with simple stability augmentation in, say, one axis and builds up to full guidance control. Displays similarly can be considered to start with simple situation displays of attitude, speed, height, etc and progress through increasing amounts of situation, errors, flight directors and/or predictor displays. Combinations of displays and controls thus fall into satisfactory, acceptable or unacceptable regions of pilot rating.

For convenience one can assume that costs increase linearly along each axis and, therefore, contours of equal cost cross the workload curves as shown dotted in Fig. 4. The curve of "acceptable" pilot rating clearly passes from high cost through a minimum to a further high cost region.

It must be appreciated that specific combinations of controls and displays might, for technical reasons (eg conflicts between human and automatic authority), result in local distortions of the pilot rating curves, and, hence, a unique minimum cost may not be identifiable. Further study should be concentrated on quantifying the rating curves and cost/complexity contours.

Any discussion of the acceptability of displays clearly must identify the amount of automatic control supplementing the natural control and stability characteristics of the aircraft. Ideally this would be that corresponding to the minimum-cost point identified above, but as this is difficult to determine, discussion with pilots has given an impression of what they considered to be the minimum "satisfactory" levels of stability for approach and landing.

These characteristics, assumed in the following chapters, appear to be appropriate levels of: (i) attitude stability in pitch, (ii) attitude stability in roll for small pilot inputs about the trim position and an angular rate control for large pilot inputs, (iii) weathercock stability to prevent the build-up of dangerous sideslip angles and (iv) vertical damping to ensure that a given control position results in a steady-state rate of descent or ascent. Of these, the roll and height control requirements seem to be the most controversial and are logical subjects for further research.

5. INFORMATION REQUIREMENTS

At the present stage of development, reliability and cost of systems for guidance, control and stabilization for V/STOL aircraft, operational blind landings, with or without pilot control, are not to be expected in the near future. A previous AGARD study of V/STOL instrument landing systems (VLS/65) assumed that instrument approach and landing procedures will possess both an instrument approach phase and a final visual landing phase during which the touch-down area can be observed by the pilot. It is felt that this assumption is still valid. The basic information required by the pilot in both these

flight phases is similar, but may be derived from different sources and may have to be presented in somewhat different forms to be optimum. This chapter outlines the required information, but, in general, no attempt has been made to indicate the specific form in which it should be displayed. This will be dealt with in subsequent chapters.

As advocated in Ref. 10, the controls should be of the "Cartesian" or orthogonal type in that the pilot should be provided with go-forward, go-back; go-up, go-down; go-right, go-left controls that change their function as little as possible or as gradually and as naturally as possible from the beginning of the approach to the final touch-down with a minimum of cross-coupling. In addition, the advantages to be gained by relieving the pilot of the task of sideslip restraint are enormous and every effort should be made to incorporate adequate inherent or automated directional stability to allow the aircraft to be manoeuvred laterally by roll control motions only, especially during the instrument phase of the approach.

It can be argued that the pilot workload required to bring an aircraft to a particular spot with zero lateral and longitudinal velocities and an acceptably low rate of descent at touch-down is much higher than the normal landing task with a conventional aircraft. Therefore, the aircraft must be readily manoeuvrable in all six degrees of freedom. Just as additional controls must be provided to allow these extra degrees of freedom to be exploited fully, display of additional parameters must be presented to allow monitoring of these motions. Consequently, the potential gains from presenting the information to the pilot in the clearest and simplest fashion are much greater in the V/STOL case. These requirements would seem to indicate the need for the use of advanced instrumentation techniques.

The parameters listed below are those considered necessary for the pilot to accomplish the approach and landing task. The incorporation of advanced display techniques and sophisticated control systems may shift the emphasis required on the various display elements, but the distribution of the information presented must always allow the pilot to answer the two questions: "How well am I doing the required task?" and "How close am I to crashing?". One display does not necessarily satisfy both these needs. For instance, the pure flight director that has to be nulled can be flown very accurately. Unfortunately, without the inclusion of situation information the pilot is extremely uncomfortable, since he is unaware of how close he is to disaster. In addition, instruments which can fail to a zero position are particularly dangerous in this respect.

No exact technique is available for selection of the information required. This is borne out by the many detailed differences in requirements for conventional aircraft which may be due to too much reliance on what is currently possible and what changes the pilots have been able to suggest. In this section the Working Group has tried to avoid these constraints and has concerned itself only with the pilot's information requirements however they may be obtained.

(i) Airspeed: The airspeed and the deviation from a desired value must be presented down to the lowest speed at which any significant aerodynamic forces assist the aircraft or aerodynamic problems such as wing stall or pitch-up (eg due to engine intake momentum effects) may be encountered. Then ground speed becomes the more important parameter.

(ii) Ground Speed and Direction: After the "aerodynamic flight regime" has been left behind, the pilot is interested primarily in ensuring that the ground speed and its direction is such that he will arrive over the landing spot at the desired touch-down speed. These also would be usefully displayed together with the deviation from the desired values which may be functions of several parameters. For instance, the desired ground speed may be made proportional to the square-root of the remaining range to the landing site. That is,

$$V_g \propto \sqrt{R} \tag{3}$$

It can be shown that adhering to such a relationship results in a constant longitudinal deceleration throughout the approach.

It would appear most advantageous to present the information for both airspeed and ground speed deviations on one display element with a smooth transition at the change-over point, since the same pilot-operated controller must be used for both and the pilot is concerned with each at separate portions of the approach. Adequate differentiation must be provided in their display, of course, to avoid misinterpretation.

(iii) Height: Even in VMC flight the pilot must be provided with altitude information to ensure adequate terrain clearance, normal air traffic requirements, etc. During the approach phase of the flight, he is concerned primarily with height above ground. Hence, a device such as a radar altimeter read-out would be more useful than a barometric altimeter.

From flight experience with the Harrier aircraft, it is evident that a numerical indication of height with 50-foot intervals is too coarse at low altitude and much finer discrimination is required. It may be advantageous in a numeric display to make the interval a function of the height above ground and a reasonable interval at very low levels would seem to be ten feet.

Analogue displays of height should not be ignored, however, since they have the inherent advantage of providing a rough indication of the rate of change of height as well as the height itself. A disadvantage of such displays is that they are expensive in space if used throughout the entire flight regime. Perhaps a good compromise is a digital read-out with constant interval spacing, to be used at altitude, augmented by an analogue display of height to be used in the final stages of the approach (say the last 500 feet).

(iv) Vertical Speed: Due to the very low available normal acceleration capability of most V/STOL aircraft in the approach configuration, it is important for the pilot to know his current vertical descent rate. Instrument lags inherent in present pressure sensing vertical speed indicators are quite un-

acceptable if V/STOL aircraft are to be flown to low altitudes in IMC by comfortably confident pilots. In addition, to avoid rates of descent beyond the aircraft's capability to arrest, the display of the maximum allowable rate of descent would be extremely useful "how close am I to crashing?" information. This limit would be constantly changing as a function of height above ground, the available maximum thrust-to-weight ratio and the flare capability of the aircraft.

The display of this rate of descent information should be optimized for IMC flight, but should be situated in a position to allow the pilot ready reference during visual flight conditions. Otherwise, if external visual cues alone are relied on, uncontrollably high descent rates can occur without the pilot being aware.

Unlike normal approaches in conventional aircraft where the rate of descent and airspeed are held constant until the landing flare, decelerating approaches of V/STOL aircraft, even on constant glide path angles, result in ever-changing vertical velocities. To make straight line and other approach paths possible, it would seem logical to present the desired rate of descent as an element of the display. This would be basically guidance information and could be made to follow a great variety of laws to take advantage of the characteristics of particular aircraft, local terrain conditions or operational requirements. One such law, similar to that suggested for the ground speed, would be to make the desired descent rate proportional to the square-root of height above the desired hover point. That is

$$\dot{h} \propto \sqrt{h - h_{HOV}} \tag{4}$$

Conforming to this law, which could be tailored to the particular aircraft, would result in a constant vertical deceleration. Combining such a descent rate variation and that advocated for ground speed, the vertical approach path could be made to assume a variety of suitable forms to terminate in the hover above the landing site. By suitable choice of the constants of proportionality and depending on the starting point rates the zero-error flight path may be roughly concave, convex or straight. However, the curved paths do not end at the hover point and must be followed by a straight segment. Indeed, the pilot may modify the flight path by, for example, following first one and then the other demand.

Utilization of such ground speed and height rate laws can result in the aircraft being flown on the approach in a more optimized fashion than if it is constrained to constant-speed/constant-altitude segments, as suggested for the "stepped approach" (Ref. 6), resulting in the time and fuel savings illustrated in Fig. 1.

(v) Pitch and Roll Angle: It has been assumed that some form of pitch angle control system would be provided and that changes in forward speed can, and should, be made through variations in the longitudinal force without altering the pitch angle. In some cases when the aircraft is going too fast for the remaining range and the longitudinal force available is not sufficient to provide the deceleration required, the pitch angle must be increased, or the landing aborted. In this instance, it is especially important for the pilot to be aware of his attitude to effect the airspeed change and then be able to return to a specific pitch angle.

A pitch angle scale is desirable and should be such that the pilot always knows which way is up. Similarly a roll angle scale should be included to enable the pilot to settle on a desired value and achieve a particular rate of turn (which, of course, would be a function of airspeed). Ten degree intervals in the roll angle scale up to thirty degrees either way together with a cursor should suffice for V/STOL aircraft approach displays.

(vi) Heading: Normal needs such as navigational assistance, orientation with respect to the wind, etc dictate that the pilot be provided with heading information. During the initial approach phase when the "localizer" is being captured, track angle is the parameter to be controlled. However, pilots have become used to using heading correction as an open loop means of correcting track angle by reference to the ILS localizer indicator. For these reasons, and also to provide back-up situation information if a flight director is used, it is felt that heading must always be displayed.

(vii) Angle of Attack and Allowable Limits: Due to problems caused by wing stall, engine intake momentum effects, and roll control power limits (see the following section), angle of attack can assume the importance of a primary flight instrument for most V/STOL aircraft. Hence, a clear, unambiguous indication of this parameter is required and should be situated close to the display of pitch to facilitate correlation between the two.

Since there is no longer a valid indicated airspeed-attitude relationship from which the pilot can derive incidence margins and since it is desirable to retain the optimum aerodynamic lift as long as possible during the approach, the allowable angle of attack limits must also be displayed. Just as with airspeed, however, angle of attack has no significance in the sub-aerodynamic region and may be removed from the display for very low speed flight. Perhaps a method of decreasing the emphasis the pilot must place on this parameter would be to decrease the sensitivity and the size of the scale as the angle of attack requirements become less stringent. That is, large display deflections would occur for angle of attack errors during the "aerodynamic" portion of the approach, but no deflection would be displayed in the entirely powered-lift portion.

It would be entirely possible in most V/STOL aircraft systems to incorporate a device that automatically limits the angle of attack as a function of airspeed by controlling the pitch angle through the stabilization system. However, a compulsive warning of the approach of the limits, such as a stick shaker, would be preferable, since the source of the automatic attitude change could be very confusing to the pilot.

(viii) Angle of Sideslip or Lateral Acceleration and Allowable Limits: Certain types of VTOL aircraft possess very large values of dihedral effect, even at low airspeeds. This characteristic can make excessive demands on the available roll control if any of a number of combinations of incidence, airspeed,

and sideslip angle should occur. If any of these three is zero the problem, in general, is avoided. Hence, the display of sideslip angle only (as measured by a vane) would be satisfactory if this parameter could be held exactly zero. This is unnecessarily limiting, however. A more meaningful item for the pilot's attention is the lateral acceleration. This parameter is related to both airspeed and sideslip angle and, if the incidence can be held within the limits required to ensure safe longitudinal characteristics, it should be possible to decide on adequate lateral acceleration limits to yield satisfactory lateral-directional characteristics throughout the approach. As with incidence, a compulsive warning device, such as a rudder shaker, should be employed to alert the pilot to impending disaster as these limits are approached. If such a device were used it would appear prudent to shake only the rudder pedal that needs to be moved forward. This would not only alert the pilot to the fact that he has not done the required task satisfactorily, but would also indicate to him what to do to retrieve the situation.

Since the pilot is more desirous of performing vigorous lateral directional manoeuvres under visual flight conditions than under instrument flight conditions, the display of both the current lateral acceleration and its limits should be optimized for VMC flight. Nevertheless, if the weathercock stability is provided by artificial means, it is essential that they be displayed in the useable instrument scan region to allow instrument approaches (perhaps with modified procedures) following stabilization systems failures.

(ix) Range to the Landing Site: Conventional aircraft are flown quite successfully with no indication of range-to-go to touchdown, other than a couple of marker beacons along the instrument landing system to signify particular points on the approach. If V/STOL aircraft are flown on curved paths in either the vertical plane or the horizontal plane, the "range information" that a CTOL aircraft pilot obtains from his altitude-glide path relationship is no longer available and the need for the display of range is much more powerful. An analogue representation of this parameter should suffice, perhaps in the form of the separation between an aircraft and landing pad symbols.

(x) Clock: No instrument panel would be complete without a clock equipped with a large second hand! Pilots find this a most useful instrument in performing a variety of instrument landing procedures, since even a simple ADF beacon becomes a valuable approach aid when account can be kept of elapsed time.

(xi) Available Thrust and Engine Parameters: Unlike conventional aircraft, the power required by a V/STOL vehicle is often greater during the landing phase than during the take-off. This is particularly true when a short take off is followed by a vertical landing. The pilot of a conventional aircraft can do an engine "run-up" on the ground to ensure that the engines are delivering the anticipated power just before take-off, the most critical engine phase. The V/STOL pilot, on the other hand, needs to know the state of health of his engine immediately before his most critical phase, that is before the landing, but he can not perform the same sort of check without disturbing his flight path unacceptably. Hence, some indication of the available thrust-to-weight ratio (that must be calculated from air data such as temperature and pressure) would be extremely valuable early in the descent, well before the hover is reached.

Similarly, since the pilot's workload is very high during the landing task and high power is demanded from the engines, critical engine parameters such as temperatures, torque and RPM, should be clearly and unambiguously presented to prevent him from abusing the powerplant to possible destruction.

(xii) Thrust Vector Angle, Wing Tilt, Duct Angle, etc: The angle between the propulsive vector and the longitudinal axis of the aircraft assumes the same sort of importance as power settings in conventional aircraft and must be clearly displayed to allow the pilot to anticipate changes from one steady-state condition to another. A large part of "converting" from one aircraft to another is learning what power settings are required to produce the desired steady state condition. The sooner this is learned and the more easily it is performed the sooner speed control becomes virtually an "open-loop" rather than a "closed-loop" piloting task.

(xiii) Guidance Information: One approach to the V/STOL guidance problem implies that automation in the form of an automatic landing system will be required to achieve satisfactory results in this more demanding V/STOL aircraft task. Assuming satisfactory levels of stability and control characteristics, however, it may be possible and desirable to leave the pilot in command and take advantage of his inherent flexibility and valuable decision-making capabilities and incorporate the automation in the "black boxes" that drive his displays. They could then look after the programming requirements in a much more efficient manner leaving the pilot the task of satisfying their demands in the manner most suitable for the situation. The display of desired ground speed and rate of descent information in the manner recommended above in parts (ii) and (iv) is a first step in providing such guidance information.

In general, guidance systems for use with V/STOL aircraft performing instrument approaches have to be as accurate as those used by conventional aircraft, but need different characteristics. The conventional aircraft must be guided to a particular ground track while maintaining an airspeed above some minimum value. The V/STOL aircraft, on the other hand, need not be restrained within such tight limits, since its inherent versatility allows a wide range of both vertical and horizontal approach paths that may be straight or curved and the landing spot may be approached from a variety of directions. Comparable accuracy is required, however, to indicate to the pilot where he is in relation to the desired approach path and to the landing spot.

The guidance information required includes:

(a) Vertical Flight Path Error: As is outlined above, V/STOL aircraft are capable of a great variety of vertical approach profiles, but due to fuel consumption, obstacle avoidance and/or handling qualities considerations, particular glide path shapes, no doubt, will be preferred. Where this is the case, the pilot must be supplied with information on how well he is adhering to the required approach path and this, probably, would be accomplished best through a display of the error from the desired path. The guidance laws suggested for the rate of descent and ground speed give one solution to this problem. The main objection to this approach, if used in isolation, is that the pilot could do a fine job of following the commanded rate of descent, but be well below the desired ground speed. The result would be a flight

path much lower than the optimum shape and possibly low enough to cause premature contact with the ground. One solution to this problem would be to ensure a rate of climb is commanded when the aircraft is below the desired approach path. Another would be to display flight path error itself. Further research is required to determine which is more desirable.

(b) Lateral Position: Obviously, on a guided approach some display of lateral position with respect to the desired ground track is needed. The form that this takes depends very much on the nature of the guidance.

Approach types can be subdivided into those where there is a preferred or mandatory direction of approach irrespective of wind (such as may be dictated by obstacles) and those where direction is secondary to the necessity of pointing into wind. In the first of these, the aircraft could find itself heading in a vastly different direction from its track (even approaching 90 degrees close to the hover if the wind is perpendicular to the approach direction) and a simple cross-track indication could be quite misleading. It is felt that for at least the next generation of V/STOL aircraft, instrument approaches will have to be constrained to straight line tracks within an angular sector to the wind such that the maximum "crab" angle never exceeds approximately 30 degrees. Whether this will be so or not, the pilot should be informed of the wind direction. It is too much to expect the pilot to be able to cope with conditions requiring simultaneous descent, deceleration, turning to account for changing approach directions and yawing to maintain the lateral acceleration zero using instrument cues only. This is an area in which further research is required, since there are operational situations in which curved approach paths would be advantageous.

The above sections attempt to outline the parameters required by the pilot to enable him to accomplish instrument approaches followed by a visual landing in V/STOL aircraft. The following chapters deal with various problems that have been encountered and are anticipated in providing this information in the most suitable form.

6. HUMAN ENGINEERING ASPECTS

From a human engineering point of view, visual displays still divide into two main families, conventional and electronic displays. Conventional electromechanical displays are almost exclusively head-down, and partake of a continuing pilot folk-lore associated with reliability and little demands by way of mechanical comprehension. Electronic displays can paint nearly any surface nearly anywhere, and participate in a folk-lore (almost mystical since not as yet stabilised) associated with continuously-breaking TV sets and omniscient computers. It may be 20 years before the aerospace world is rid of these two inadequate and stultifying groups of ideas.

It is therefore difficult to maintain objectivity, but our honest view is that conventional dial-type instruments are just too restrictive to accept the variety of information relating to V/STOL approach and landing. They have, at the least, an insufficiently large display area or an inability to perform the required mode-switching. What follows, then, is conditioned by a prejudice in favour of electronic display forms.

One generality, however, holds whatever display form is considered. This is the recommendation, emerging quite forcibly from a growing body of research, that the human pilot should be treated neither as a continuous servo-controller, solely, nor as a continuous monitor, solely. The former type of task taxes musculature without adequately involving brain, while the latter type of task involves neither musculature nor brain sufficiently to maintain an appropriate alertness.

To consider electronic displays, one first has to observe the normal Head-Up/Head-Down Display distinction (HUD/HDD). It may often be desirable to have aircraft information displayed in a location approximating that of forward terrain etc, and this can best be achieved with HUD. A HDD combining a TV picture overlayed with guidance information can be used but denies the value of more peripheral vision.

Some claims that HUD reduces pilot workload arise, in a sense, from muddled thinking. A superimposed display can not naturally be interpreted simultaneously with the underlying real world view. The pilot still retains an attention-switching task in all but exceptionally overlearned situations (eg, about the fifth and subsequent repetitions of the perfect ILS to the home field). Real claims about reduced workload should stem from the computing and CRT limitations which have forced designers to appraise more analytically just what should be displayed (but this applies to HDD too) plus a reduced need for visual refixation and re-accomodation (head-down to head-up and vice versa).

The prime human engineering criticism of HUDs to date is their vulnerability to stray light. Compared to HUDs, HDD's can be shrouded, can be provided with a wealth of field lens and honeycomb filter devices, and can not be impaired by dazzle sources at those critical shallow angles around 90° to the display face. In addition, they do not have to be so bright to make an acceptable contrast with their immediate surroundings, so the eye is allowed to work in a lower light adaptation field. This in turn allows a display of wider dynamic range head-down. It turns out, however, that desirable HDD's (eg, TV screens) require development in terms of brightness output.

A common criticism of HUDs is their limited field of view. Unfortunately, discussion of this topic still rests on opinion rather than data. Fields of view of only 8° have been used satisfactorily in pre-production CTOL vehicles, and 12° - 15° fields are certainly usable in production CTOL. Experience so far with a military V/STOL aircraft indicates that a field of view between 11° and 20° (depending on one's definition) is quite acceptable. Nevertheless, fields of view between 40° and 60° are often mooted. Here is a topic to which research attention has long been overdue.

Conventional displays, once individual human factor problems had been attended to, could still be practically illegible because of two main kinds of misdesign. First, there could be so many on the panel that the average eye never got around them in the time available. Secondly, each could turn out, in context, to be so overburdened with non-combinable information that the average visual cortex never arrived

at the truth in time. Electronic displays are not generally offered on the basis of their ability to reduce saturation in the cockpit in the first, geographical, sense. They remain susceptible, however, (in relation to the second objection to conventional displays) in that they can still display too much information. This is less likely to happen though, since electronic display elements are generally the result of some considerable calculation anyway, and this makes it easier to combine information sensibly before displaying it.

One levels two main criticisms at electronic displays, "clutter" and "coning of attention" (although neither should be reserved for electronics exclusively). By display "clutter" one usually means that a large proportion of the display surface is painted with scales, symbols, etc. By "coning of attention" one normally refers to a problem of fascination by a data-rich display which banishes interest in all else. Conventional displays, too, can be either too scribbled or too important to lose. In either display family, the underlying problem is to select the essential and desirable information, and draw it concisely and without confusion. In particular, with electronic displays care should be taken not to overuse their inherent capabilities, and not sense-compute-display all the parameters in the flight dynamics text-book.

Few tactics exist for information selection. In the past, lists of information requirements for conventional fixed-wing aircraft show little concordance in detail. Perhaps their conception has been marred by a thinking too rigidised by what systems and displays exist now and what pilots happen to have noticed about them. Similarly, pilot task analyses, pilot eye movement link analyses, the whole practicable gamut of laboratory "workload" rituals, all tend to conformity because one can measure only the here and now. It is a basic logical fault to infer the desirable from the present case. We are therefore left with the individual creative leap, usually met in the form of cautious trial and error.

Once the parameters to be displayed have been estimated (as in Chapter 5), two further major compromises remain to be made. Systematically, the first would be to select the level of data sophistication, the second to select scaling values. Only then should one consider display symbol geometry. In practice, the three go on quasi-concurrently, since no evaluation could otherwise proceed (not even the 1-test-pilot-oration method) if it were not to be almost entirely vacuous. By level of data sophistication, we refer to integration, inner versus outer loop control choices, and other factors as those previously discussed in Chapter 4. By scaling values, we mean the angular subtense, at the pilot's eye, of an increment of the displayed parameter.

The more sophisticated the data level driving the display, the more remote the pilot becomes from the source data, and the further he must regress in a failure case. There is research (Ref. 7, 8) to suggest that the development of controlling skill includes a progressive ability to concentrate more on the slower-acting outer-loops. If, however, pilots experience only displays which permit outer-loop decisions, they are unlikely to be adept at controlling the higher-frequency inner-loop activities on which life also depends. There is therefore an important "reversionary mode" training programme to consider. Without such training, the pilot's adaptation to a failed system is a lengthy affair (Ref. 9) entailing any gain change, then lead/lag equalization, then error input spectrum.

At the start of the Chapter we gave our view that conventional displays lacked effective surface area. A consideration of display scaling usually takes aircraft altitude as the severest example, and this will make our point. For here, the pilot may at times be interested in an accuracy of better than 0.01% of full scale (eg 5ft in a 50,000 ft range). This can not be achieved safely by multi-indicator means (eg the dangerous 3-pointer altimeter) and demands numeric, expanded scale, or selected scale techniques. All are physically simpler for electronic display forms, given adequate computing. Note here that displayable sensitivity need not be the same as controllable sensitivity. To continue the altitude example, the pilot may need to know what is being left uncontrolled, say, to the nearest 1 ft, while he does what he can about it only to the nearest 10 ft.

The display of engine parameters has apparently received much less research attention than that devoted to flight displays. There is at least an undercurrent of opinion that for power plant and thrust management electronic displays, again, might hold the future. Here, developments could reflect recent trends in ground test equipment, where a large number of check points is quickly cycled through, and the information displayed is limited to out-of-tolerance data only.

Note here that numeric indicators can permit at least some rate appreciation, but a display embodying, say, 3 to 5 simultaneously changing numeric indicators can be very demanding perceptually. Certainly, a low limit should be placed on the number of indicators grouped in this way. Note also that some research (perhaps specific for each vehicle/operation) will be needed to establish how long an individual numeric indication must be retained for the pilot to be able to read it. Unsystematic observations suggest that a hold time around 0.7 sec before changeover may be sensible.

Something peculiar to electronic displays is their promise of pilot's view simulation (contact analogue displays). This is such a fetching toy that people have tended to forget what proportion of fatal accidents occurs in perfect weather at the home field. There seems no acceptable compromise between clutter on the one hand (eg full-colour TV) and lack of cues on the other (eg height perception difficulties). CRT line drawings of, for instance, major runway linear features are abysmally inadequate compared to the perfect view out, and even this view out has been known to need supplementation since the first 19th Century barometer was used to assess height. This simple need, to be given better than naked eye pictures, has in the past been adequately met by conventional dials. However, with the additional needs of V/STOL, these are likely to be almost totally inadequate. To offer pilots less than the Wright Brothers had, that is, to offer the pure contact analogue, is certainly not acceptable in the V/STOL case.

On the other hand, to provide a reliably accurate real-world overlay may have a use. If, for example, the linear runway skeleton referred to is on a HUD (and is not the prime landing data source) it could be a transitory aid in showing the pilot where the real runway will appear. In the case of V/STOL

aircraft this may be impossible because of the limited field of view compared with likely landing site locations. The required overlay accuracy has not been reached to date, however, and in any case a symbolic display would be just as effective. Helmet mounted displays might alleviate this problem, but they are fraught with problems of their own (of axis transformation, head position pick-off, etc).

V/STOL flexibility is bought at the price of two or so additional channels for the pilot to have to control. Furthermore, the transfer from aerodynamic to engine lift during the late approach means that conventional stick or thrust controls undergo a marked change of use. Research is needed to study how well pilots cope with this situation, and also to investigate whether a more radical control design (eg separate translation control for each of the three axes) is justified. This could lead into some consideration of crew complement; given a crew of two, one might conceivably attend to speed, the other to flight path control, for example (Ref. 10).

In the final approach, V/STOL aircraft raise problems relating to external view and cockpit accelerations which have no exact counterparts in CTOL vehicle operations. If the view down and to the sides is much increased, as is desirable to allow visual cues to be utilized late in the landing, then the lines of the instrument panel edges no longer provide attitude reference, and this may have to be added (by, for example, some form of windshield markings). As to cockpit acceleration cues, these are for the most part unusual because of the low speed regime in which the aircraft is operating. For example, normal acceleration would scarcely increase due to incidence changes and stick forces might change imperceptibly with airspeed. The lack of these cues requires that several information parameters receive different emphases to the CTOL case.

7. SURVEY OF CURRENT V/STOL DISPLAYS

An attempt has been made in Chapter 5 to establish the information that must be displayed to the V/STOL aircraft pilot during instrument approaches. The current practice of displaying most of these parameters on separate instruments on the panel leads to considerable human factor problems and pilots report an extremely high - if not intolerable - workload.

It is not sufficient, therefore, simply to ensure that the data is there somewhere, it must be displayed in an ergonomically acceptable fashion. This leads to the combining of several parameters into one display area or into one single combined element. The latter approach, typified by replacing an actual and a desired parameter by a display of the error, can be a powerful technique if used with caution. In general one talks of "combined" displays where separate parameters are closely co-located and "integrated" displays where several parameters can be observed or deduced from the same display element. The display designer should work closely with the systems designer to ensure that the best use is made of these different techniques. Nothing is more unproductive than an argument between entrenched protagonists of "situation" displays on one hand and "director" displays on the other. Both could be needed in a difficult situation. In the following discussion it should not be assumed that the details are applicable in every case - they are merely illustrations of the possibilities that exist.

The human eye, absorbing information from the outside world, sees everything in angular terms and the single eye has no "ranging" ability over a few feet. Even with two eyes the range-finder effect disappears at a surprisingly short distance and range is deduced from a combination of previous history and the change of picture with dynamic movement. Everyone is familiar with the misjudgement of size that occurs in fog and the apparent nearness of very distant scenes when the atmosphere is abnormally clear.

In a visual landing, therefore, a pilot is fairly confident about the angular placement of various objects (including the ground) but he is remarkably deficient on judgement of range and range rate. This is shown in conventional landings by the large scatter of touch down points that occur even when the pilot is provided with height. If the outside scene is somewhat deficient in detail (as at night) the situation can (and unfortunately sometimes does) become fatally dangerous. It is possible, however, by choosing different sets of axes for a display, to present certain parameters in a form that permits visual judgement of quantity. Thus a forward looking type of display (Vertical Situation Display), analogous to the normal view, has difficulty in conveying a sense of range but a plan-position view (Horizontal Situation Display) conveys it admirably. Similarly while both of these can not convey height directly (although some ingenious but tricky techniques have been used with the VSD) it can be easily done by a sideways looking display (Profile Display). A survey of displays which have been used experimentally or proposed for V/STOL work shows how different designers have attempted to solve these problems.

The displays considered here are only those concerned with the landing-approach of V/STOL airplanes. This means that other types of displays, such as engine, navigation and tactical displays, are disregarded in this chapter.

For the survey a division in three groups has been made:

a) Separated vertical, horizontal and profile displays
b) Perspective displays
c) Combined vertical-horizontal displays.

7.1 Separated displays

These displays make use of a conventional cockpit-instrument lay-out sometimes together with a moving map.

Several concepts have been investigated in flight, including a combination of a conventional attitude director indicator (ADI) with a cross pointer type horizontal situation indicator (HSI) evaluated by NASA with a helicopter not equipped with artificial stabilization equipment (Ref. 11). The ADI provided indications of the roll and pitch attitude and the glide slope deviation together with a control-command (flight-director) signal for course control. Small vertical-scale instruments presented airspeed, ground

speed, range and height. The flight tests were performed under simulated IMC along a 6° glide slope at constant speeds of 30 and 60 knots. Approaches at 30 knots to a 50 ft break-out appeared to be possible for skilled well-trained pilots but the workload was considered to be quite high, even during these constant speed/constant glidepath approaches. Improved stabilization might have alleviated this problem. The operational suitability of the display tested is, however, doubtful.

NASA repeated the same type of evaluation trials with the display shown in fig. 5 (Ref. 12). The difference from the former display is primarily the replacement of the cross-pointer-type instrument by a moving map display. This change had a favourable influence on pilot opinion, mainly because the moving map gave a direct indication of heading with respect to the landing site. Changes in scale of the moving map appeared to be necessary during the approach, but it was found that pilots were able to adapt readily.

The same type of display system was tested during constant speed (45 knots) simulated IMC approaches (6° glide slope) in a helicopter equipped with a stability augmentation system (Ref. 13). The ADI was,in this case,fitted with a vertical needle indicating the commanded roll control position. The results indicated that the pilot could perform acceptable approaches, but the flight director indicator required considerable attention resulting in the pilot having some doubt as to the overall status of the approach.

The same aircraft display system (complemented by a normal ILS crosspointer indicator) has been used by NASA during deceleration approaches to an instrument hover along a 6° flight path (Ref. 14). Hovering trials under simulated IMC during this program indicated that the accuracy with which the pilot was able to stay over a desired spot depended heavily on which displays he emphasised. Using only map and altimeter resulted usually in aborts with excursions exceeding several hundreds of feet. In other tests, with the pilot instructed to share his attention between the directors and situation displays the accuracy was only half as good as when the flight director received full attention. In the latter case the accuracy was very good with the pilot able to hold any point of the aircraft within a 35 ft diameter circle almost indefinitely. Fig. 6 compares the results obtained in IMC with those in VMC.

It is difficult from the above trials to sort out how much benefit the essentially horizontal director display derived from being superimposed on the attitude situation indicator, but improvement of flight director and situation information integration is necessary. Also the flight-director logic needs refinement. During the decelerating trials the pilots were found to be ignoring director demands if they called for large pitch attitudes which indicates that certainly monitoring of the situation information took place. Would these limits have been tightened if the attitude display had been separate from the directors? Despite the excellent performance on directors and the deterioration when situation scanning was added the pilots expressed a lack of confidence in directors alone. Flight-director information is, however, thought to be essential for performing approaches to a hover at the pad.

If the information presented by the two instrument displays described above is compared with the information required for IMC-flight (see Chapter 5) it is found that most information is present, but in some cases implicitly. The difficulties encountered in controlling the helicopter originated partly from display lay-out deficiencies and partly from the vehicle stability characteristics.

Profile displays, in which the sideways view of the situation is given, have not been extensively used or tested. However, work has shown (Ref. 15) that this type of display provides useful situation information to support or confirm guidance information which the pilot receives from another source (generally the flight director). By providing the aircraft symbol in the Profile Display with a flight vector pointer it is theoretically possible to use this as a flight director in the vertical plane but problems of scale tend to offset this capability and the display is probably best considered as an ancillary situation display.

7.2 Perspective displays

Several types of perspective displays are proposed and some have been tested during approaches in helicopters and in ground-based simulators. Most of them give a symbolized view of the outside world as viewed by the pilot from the cockpit, sometimes complemented by a pathway in the sky (Fig. 7). For a more complete review of perspective displays reference can be made to Ref. 16.

A conclusion of a NASA-tested contact-analog display in the landing approach (Ref. 17) was that: "despite the deficiencies in the contact-analog presentation the pilots were of the opinion that the combined presentation of attitude and guidance information in a single, perspective format represented an improvement over the separated vertical- and horizontal-situation presentation of two of the displays previously tested at Langley Research Center".

This may illustrate the usefulness of combined vertical and horizontal displays. It is, however, dubious whether a perspective display is the best way to present this information. For instance, the judgement of altitude might be difficult, as mentioned in Chapter 6. To quote a US Navy simulated exercise (Ref. 18):

> "Subjects had difficulty in judging vertical position even under conditions in which range to touchdown was held constant and subjects were given unlimited time for making the adjustments".

NASA, in an effort to study these problems further, is now in the process of developing a simulated "real-world" display using a S-61 test helicopter. The objective is to determine what real-world cues are needed to perform a deceleration and landing. A TV-picture is taken from a standard simulator model terrain. The necessary information for controlling the ground based TV-camera above the modelled terrain is partly telemetered from the aircraft and partly obtained from a ground-based tracking radar. The picture is broadcast to the helicopter and displayed on a monitor. The use of glide-slope and touchdown-po-

sition symbols in the model terrain is envisaged. The interplay between handling qualities and display requirements will be investigated by varying the artificial stabilizer characteristics.

7.3 Combined displays

From the work described in Section 7.1 there is clearly a need for a display which combines some form of director with the horizontal and vertical situation so that the pilot can monitor the one with the other. There is, in fact, much evidence to show that a pilot will judge how closely he needs to obey the director commands by reference to his situation. This is not an undesirable state of affairs, provided it is used with caution, and can contribute greatly to easing the overall workload.

In the following types of displays the horizontal and vertical situation information has been combined in order to shorten the scanning cycle of the pilot in carrying out this cross-reference. One attempt to combine vertical and horizontal displays is that by Teldix (Germany). Being largely an electronic display different modes can be selected for navigation, approach and hover. That shown in Fig. 8 is the hover display which is principally a horizontal display with vertical information added. The main features differ markedly from the NASA display (Fig. 5) and merit comparison. The ADI used in the NASA trials was entirely consistent with VSD principles. Even the horizontal cross pointer was virtually a pitch director since in the helicopter range-rate was controlled via pitch. In the Teldix display, however, there is super imposition of a straightforward VSD (aircraft symbol, horizon, glidepath zero-reader type cross pointers) and an HSD (compass rose, truescale range circles, landing pad). In addition, there is shown a very important parameter - the ground speed vector, represented as a line of variable length pointing in the appropriate direction. As all of these are given as abstract symbols the pilot has to learn to disentangle the information appropriate to each axis. This particular display has not yet been flown, but extensive ground based simulator testing has indicated a degree of feasibility (Ref. 19). The results of ten pilots carrying out 100 completely blind landings are shown in Fig. 9 where it is seen that most touchdowns were within a circle of 5 metres radius. Of course, the limitations of a fixed-base simulator without the psychological effects of real flight have to be allowed for and such results would need substantiating in flight trials but they are, at least, encouraging. Even making allowance for the difference between simulator and flight tests it is interesting to analyse the success of hovering with the Teldix and NASA displays. The NASA experiment using a moving map alone was unsuccessful whereas the Teldix display and the NASA trials with flight director were successful. The answer most likely lies in the presence of the speed vector which is shown explicitly in the Teldix display and is implicit in the cross-pointer (fed by ground speed deviation and pitch attitude, that is, short term ground acceleration) in the NASA ADI.

An interesting conclusion reached by Teldix was that the expected confusion between horizontal and vertical type symbols did not materialise. The limitations of ground-based simulation may be of particular importance in this area, however, and more work is needed under flight conditions. The actual characteristics of the display symbology are also very relevant in preventing confusion and the basic rule of avoiding clutter probably takes on added importance.

Fig. 10 has been proposed from a background of experience with a display for helicopter station keeping but has not been tested, and Fig. 11 has been evaluated during a fixed-base simulation of a helicopter and a fan-in-wing VTOL aircraft.

The results of the tests with the latter format (Integrated Electronic Vertical Display) showed that IMC steep-angle approaches and landings are possible. It further appeared that the effect of approach mode variation was minor. Therefore, a parabolic mode was recommended because it offered increased terrain clearance in the terminal area.

The head-up display shown in Fig. 12 is currently operational in the U.K. Harrier V/STOL aircraft but it can be seen to be lacking in horizontal situation information. This is because it has not been designed for IMC. Combined displays, however, covering this case have been proposed by RAE and are shown in Figs. 13 and 14. These follow different guidance philosophies in an attempt to determine the best line to follow.

Fig. 13 gives the so-called "guidance" HUD proposed by RAE in which two elements are supplemented to the HUD of Fig. 12. One is a trapezium which is driven vertically by a function of range and range rate. When the trapezium coincides with the aircraft symbol the aircraft is decelerating correctly. The horizontal displacement of the trapezium and the pyramid lines show the relative bearing to the landing site. The pyramid is further driven in the vertical plane by height and height rate and is used as a flight director for height control. Depending on whether the aircraft is wingborne or jetborne the pilot reacts to this command by using either his control stick or throttle as appropriate. Simulation trials have been successfully completed and flight testing of the display arrangement in a Kestrel aircraft is planned.

The "control director" HUD (Fig. 14) follows another philosophy. The range information of the former display has been substituted by symbols showing computed throttle error and thrust deflection angle error. Simulator studies have shown that pilots can perform an accurate transition by the use of the directors. The pilot's workload appeared to be very much reduced by the automatic computation of the interchange of roles of control column and throttle in a transition. An unfavourable effect of the director display, which is well-known, appeared to be that the pilot was not completely aware of the true power management and flight information. The preliminary results of the simulation show that experienced VTOL pilots prefer the "guidance" display while others tend to favour the "control" display.

An attempt to combine both vertical and horizontal information in a head-down display proposed by RAE is shown in Fig. 15. This shows a basic similarity to the Teldix display but there has been a significant elimination of the cross-pointer vertical and lateral commands. Instead, there is a separate rate-of-descent and required rate-of-descent scale and a purely situation display of lateral error. However, the speed vector line has been given greater prominence and is scaled so that when it is superimposed over or near the landing pad symbol the aircraft is being decelerated at the appropriate rate. This display is intended to permit considerable freedom of choice by the pilot in the flight profile he adopts in getting

to the pad - an important V/STOL capability which, if correctly used, can reduce total pilot's workload considerably. So far, however, this display has been put through simulation tests only.

7.4 Comparison of displays and requirements

Comparison of the required information in IMC-approaches as stated in Chapter 5 with that given in the display formats discussed above shows that some of the newly proposed types fulfil most requirements. It should be remembered that most of the displays considered were tested on helicopters in which angle of attack and sideslip limits are not stringent. This is the reason that some of the displays lack information on these quantities. The mass of information to be absorbed by the pilot, usually in different axes, tends to demand an integrated or combined display. There seems sufficient evidence to indicate that it is possible to combine both a horizontal and a vertical display in one format although the actual display nature of any particular parameter depends on the characteristics of the aircraft, whether the display is head-up or head-down, etc. The difficult element appears to be height situation which does not lend itself to either HSD or VSD. Further work is needed in this area.

Before discussing detailed aspects, something should be said about other limitations of the assessment conditions under which most of the displays mentioned in this chapter have been tested.

7.4.1 Limitations

Important conditions are:

- the number of test subjects. A very limited number of pilots can not possibly represent the pilot population. Furthermore, results obtained from trials with test pilots can be very different from those obtained if squadron or airline pilots are the subjects.

- the "test-vehicle". It is generally appreciated that simulation, especially fixed-base, can not represent the final V/STOL phase adequately. Even flying "under the hood" with a safety pilot aboard is definitely not the same as flying alone under adverse weather conditions with a V/STOL airplane into restricted sites. The discussion on trade-off between control and display sophistication in Chapter 4 includes the point that conclusions drawn for a particular display are in actual fact only valid for the vehicle-display combination. This could also mean that the design of general purpose displays is unrealistic.

- the task and its measurement. The task presented to the pilot should make full allowance for the inherent flexibility of the V/STOL-aircraft. A proper yard-stick for evaluating the performance of the system might be, for instance, the measurement of the possible variety of approaches.

7.4.2 Attitude Control

In all the displays outlined above there has been a presentation of aircraft attitude. The NASA helicopter by the nature of the test vehicle could control forward speed only through changes of aircraft attitude and the demand was fed onto the pitch director. Similarly, course guidance was fed onto the roll command bar. The role of the attitude situation display was then purely that of a monitor enabling the pilot to keep his responses within limits which were dictated by his knowledge of what was safe under the height and speed conditions. Theoretically this limiting condition should not have arisen if the pilot closely followed the directors though the approach. However, the tendency for a pilot to do one thing at a time (eg change speed or change height) means that errors in one channel can sometimes build up. If, for example, ground-speed errors occur, perhaps aggravated by a tail wind component, demanding an attitude that the pilot is unhappy with, and he limits his response, the error can possibly increase still further. He may actually be decelerating, but only by reference to the general horizontal situation can the pilot judge whether he is likely, in the remaining range, to decelerate sufficiently. His judgement in this respect is greatly aided by the co-location of plan position and speed vector. If the speed vector line is not shortening as fast as the pad is moving towards his present-position symbol, then he will not make it to the hover. With many advanced V/STOL aircraft it is possible to decelerate without altering attitude through the use of thrust vector direction controls and the pilot can control forward speed as an independent parameter. Under these circumstances he would normally keep the aircraft attitude at zero or some other constant angle and the display should similarly separate out the elements used to convey information to the pilot about these two separate functions. Nevertheless, inadvertent attitude changes can alter the forward speed and, hence, interfere with the speed control. It is, therefore, desirable that these changes be kept to a minimum and the display of attitude should continue to occupy a fairly central position.

7.4.3 Height Control

Attempts to display height information on a VSD or HSD or a combined VSD/HSD have been ingenious but hardly elegant. They range from separated elements such as numbers (Figs. 12 and 15) and scales (Fig. 16) to integrated elements such as pathways (Fig. 17) or "telegraph poles" (Figs. 18 and 19). The two last named are, of course, not situation but error displays and require further support to give actual height (eg the reference height pole in Fig. 19). On occasion the need for height itself may be partly psychological but this is not unimportant and the designer should assess very carefully the total need before opting for one or another of the various types of display. In general, it can be said that height in an integrated display is a very intractable parameter and further research is needed in this area.

7.4.4 Lateral Control

Information for lateral control is fairly easily displayed, in both director or situation form, since either can be represented in a VSD or an HSD format. The practice seems to be to present director information in the vertical form (as in a conventional flight director) and situation in a horizontal form although there are exeptions. As was pointed out in Chapter 5, with a wind perpendicular to the desired track, an aircraft constrained to fly along a fixed course-line could end up pointing at 90° to the track and a simple display of course line deviation becomes meaningless or confusing. For this reason

a situation display based on a horizontal plan position format is to be preferred. If wind direction can also be shown then there is a great improvement in the state of knowledge of the pilot.

8. ADVANCED DISPLAY TECHNIQUES

Consideration of the discussions of previous chapters leads one to the conclusion that conventional displays (ie individual electromechanical instruments) do not have the flexibility required for the V/STOL approach and landing case, but will still be useful for the presentation of information that does not change its requirements throughout the flight. Fortunately, advancements in display techniques (not particularly aimed at V/STOL) promise to alleviate this problem.

Electronic displays have entered the cockpit for several reasons. These include:

- the necessity to display complex information to the pilot (decreased space and scan cycle in comparison with mechanical displays)
- the desirability of time sharing (decreased space and complexity in comparison with separate single-mode displays)
- the increasing requirement of electronic head-up sights for sophisticated nav-attack purposes.

Before describing the state-of-the-art and the interesting features of some promising new electronic display techniques it might be worthwhile to note very briefly some of the general requirements for cockpit displays. These include:

Brightness	- readable in approximately 10^5 lx ambient light conditions
	- dimmable from maximum to 0.5 cd/m^2
Resolution	- 100 lines/inch for moving symbols
	- 3 milliradians for characters
Accuracy	- entirely dependent on displayed function
Life	- at least 10,000 hr for entire display desirable, but at least 1000 hr is usable
Power Efficiency	- minimum increases in electrical power demands over present level.

The interface, storage and character generation devices depend on display techniques used and will not be discussed here. Where necessary special requirements will be stated.

The cathode ray tube dominates the electronic display field. This device is well documented, it is economic and it has a fairly good performance. At the present time it is fair to say that no other display technique can challenge the CRT in terms of speed and cost and its characteristics are such that it can satisfy most of the requirements for brightness, resolution, accuracy, etc. The large tube volume and its vulnerability and high power requirements are some known disadvantages, however.

There are some principal characteristics of CRT displays which deserve consideration. These are: (1) the method of drawing the picture, - stroke writing or raster scan, (2) the method of deflection - electrostatic or electromagnetic, and (3) the nature of the deflection amplifier - AC (tuned) or DC.

Stroke writing (sometimes called cursive writing) defines a technique whereby the electron beam of the CRT actually draws only the line being displayed, whereas by the raster scan technique the total screen is filled with an invariable pattern of lines, the brightness of which is controlled to provide the required symbol or picture.

The advantage of stroke writing is the relatively low writing speed required with a consequent high brightness potential. Deflection by means of DC-amplifiers for the production of complex pictures can be very demanding of power in an electromagnetic deflection system. An electrostatic deflection system does not require high power, but it does demand a long cathode ray tube with attendant installation difficulties. The addition of shading or a TV-background picture is impracticable at the present state of stroke writing technique unless one uses a combination of AC-deflection for the TV-picture and DC-deflection for stroke writing in the flyback period. This still gives rise to considerable difficulties for airborne installations (See for example Ref. 25).

The raster format has the ability to draw full pictures. It involves a more difficult circuitry, however, and is lower in brightness than the stroke writing displays. Characters have to be formed within the fixed raster and this, in general, leads to over-simplification of the symbols drawn.

Multicolour displays can be used for information coding in the cockpit. Currently there are two techniques in use. The segmented phosphor using one or more guns and an appropriate beam directing technique, and the multilayer phosphor with either two guns or beam current modulation on one gun. Both techniques result in a considerable loss of brightness. Certain other CRT techniques being explored include: (i) the use of a mixture of phosphors whose output versus beam current is non-linear which can produce colour changes with different current densities, (ii) miniature tubes and Schmidt projection systems which hold promise if they can be made small enough, (iii) the flat CRT such as the Gabor tube and the digital scan TV display which are currently in the research stage, (iv) combinations of a CRT and a moving map display.

Laboratory tests have demonstrated the feasibility of making three-dimensional and stereoscopic CRT-displays. These are, however, far from being used in the airplane cockpit and their necessity remains to be proven.

Special contrast enhancement techniques have been employed and further developments such as polarized and fibre optic faceplates and the use of special meshes and multilayered phosphor (so-called optical diode) are progressing.

Light emitting diodes (LED) have been used in solid-state matrix displays. Several types of diodes (gallium-phosphide, gallium-arsenide, etc) have shown promise even in the presence of very high ambient brightness levels (> 10^5 lx). Flight instruments with varying scales are possible due to the miniature size of the diodes. Their wide viewing angle, their small mounting depth, their reliability, their storage potential and their matrix construction which permits direct digital addressing of the panel contribute to the advantages of these devices.

Disadvantages of light emitting diodes include a serious heat dissipation problem, the fact that the light is principally red and their efficiency in other colours is diminished, and the overall high cost and complexity of any significant display area.

A liquid crystal display uses materials that have the physical properties of liquids, but change their optical properties (light reflection) when they are subjected to various stimuli such as heat, a magnetic field, pressure, ultraviolet light and an electric field. Three different phases exist which are termed: nematic, smectic and cholesteric. The nematic phase is the one used in most displays. The crystal is placed in front of a mirror to achieve a pseudo-reflective system and since the effect of the application of voltage across the electrodes is to vary the transmission, the contrast of the display is independent of the ambient light level (the brighter the light, the brighter the display). The visible pattern is determined by the physical configuration of the electrodes. It appears possible to drive a liquid crystal display directly from the computer-logic because very little power is involved and it has attractions because of its storage potential. This facility might prove most useful in aircraft warning displays. However, there are problems with temperature stability, method of addressing (particularly in the TV case), life and a response time that is too slow for rapidly changing displays.

In the plasma display use is made of the self-luminous effect of a gas-discharge. The visible glow assumes the shape of the electrode and can in principle have any form. Two formats are used: the fixed format in which the elements are shaped to form a special image (such as a part of a number) and the flexible format which forms a matrix type display. This technique also has the attraction of inherent storage capability.

It has been shown that AC and DC driven fixed-format displays are possible, of which the DC system in considerably advanced in development. For matrix-type displays only AC systems appear to be useful. There are problems in the field of manufacturing tolerances, life time and writing reliability and in addition to being expensive and requiring a large number of driving lines, this technique suffers from gradual darkening caused by electrode bombardment. Using external electrodes can overcome this problem but raises others. The idea is promising, however, and deserves encouragement.

Electroluminescent (EL) displays use a phosphor, such as zinc sulphide, which is activated by an AC voltage. The phosphor is deposited between two conductors one of which has to be transparent. Activation can be achieved by using a crossed grid in which each point is specified by activating the appropriate lines on two co-ordinate axes. Power consumption is low. Several disadvantages such as a lack of adequate contrast, poor resolution and a short service time preclude the use of large EL displays in the cockpit. Applications for annunciators and other small-scale displays are possible, however.

Two main types of laser displays are being developed - the scanning laser and the holograph. Scanning laser displays are still very much in the research stage, but they have potentials for a substantial improvement over CRT's especially in brightness and contrast. Color-scanning lasers are possible in principle.

Holography is a new science, which looks very promising. It is possible to display any type of three-dimensional picture and, for this reason, this display-technique might be very useful for landing in IMC. A few types of special purpose holographic displays are at the laboratory stage, but problems such as high power consumption have to be overcome before this technique can be considered practicable for airborne use.

In summary, it can be concluded that there are many and various lines of research and development which can be exploited for advanced types of V/STOL displays. The fact that they are not being developed exclusively for V/STOL aircraft use is immaterial since the Working Group has found little difference between the demands for advanced display technology in V/STOL and CTOL aircraft.

9. CONCLUSIONS

To exploit effectively the inherent capabilities of V/STOL aircraft, instrument approaches to landing in confined areas must be possible. The deliberations of the Working Group have indicated that technology exists to present the pilot with almost any information, but displays currently in use, however sophisticated, do not allow the pilot to accomplish this task. How best to do this and with what mixture of manual and automatic control is not entirely clear, but this report has attempted to focus attention on various aspects of the problem, to review the current situation and to outline future possibilities.

From a study of the effort being devoted to developing displays and from discussions with pilots and engineers within various NATO countries the general conclusions reached by this Working Group are:

1. Restriction of V/STOL approach profiles to long straight segments will be expensive in fuel and tactically inelegant. In order to enable the pilot to accomplish more flexible approaches he must be provided with information in addition to that normally presented in conventional aircraft. With the increased number of parameters requiring pilot attention the potential gains in both performance and safety from presenting the information in the cleanest and simplest fashion are much greater in the V/STOL case.

2. Automatic stability augmentation is certainly within the state of the art and should be used, preserving pilot attention for those tasks which can be automated less efficiently.

3. Complete automation of flight control in V/STOL aircraft is considered to be in an exploratory state and not to be optimum with respect to cost-effectiveness due to limitations of technology (navigation aids and aircraft control), to payload considerations and to the restrictions of the operational environment.

4. Even with the foreseeable advances in guidance, control and display it is not likely that V/STOL instrument approaches to touch-down will be practicable in the near future.

5. Even though the utilization of director displays can improve the performance of a pilot in specific control tasks his confidence can be undermined if adequate situation information is not provided as well.

6. The mass of information to be absorbed by the pilot, usually in different axes, poses peculiar problems in the integration of information and implies the use of combined displays. There is evidence to indicate that it is possible to combine both a horizontal and a vertical display in one format. The most difficult element to incorporate in such displays appears to be height information.

7. Due to their limited versatility, conventional electro-mechanical instruments do not have suitable characteristics for the V/STOL approach and landing case. Existing electronic displays and the advanced techniques being tested in laboratories and simulators hold more promise.

8. Techniques of engineering displays for conventional flight appear adequate to present the information required for V/STOL approaches and no special development appears to be required.

9. To ensure that guidance systems procured are adequate for future needs, more relevant operational requirements should be developed.

10. Due to the deployment of V/STOL aircraft to dispersed areas their avionics equipment must possess a higher reliability than is the case for such equipment in conventional aircraft operating from main bases. Consequently, the design should be as simple as possible while still providing the essential functions. The tendency to devise elegant and sophisticated displays simply because the technology exists must be resisted.

11. Whether the information is presented head-up or head-down is not a matter of principle in the V/STOL case. It is strongly dependent on other circumstances such as the existence or not of a head-up display for other mission purposes.

12. Apparently very dissimilar displays can be shown to contain very similar information and it is probable that the details of symbol geometry, for example, have a secondary effect only. It is more important to get the intrinsic information correct than to follow slavishly any given presentation format.

10. RECOMMENDATIONS FOR FUTURE RESEARCH AND DEVELOPMENT

The group members, after extensive discussions among themselves and consultations with technical experts and test pilots, make a strong plea for the development of displays which take advantage of the full flexibility of V/STOL. This Working Group has not attempted to specify the detailed patterns of displays, but, rather, has offered guidelines with regard to the detailed information content and the reader should here refer to Chapter 5 in extenso. Most current V/STOL displays have been empirically designed with inadequate regard to the underlying principles. It is hoped that this report will help to rectify this position. Nevertheless, the Working Group feels that there are many problems outstanding, and recommends the following items of work for serious consideration:

1. Further studies centered around the probable optimum mixture of displays and automatic control should be carried out to improve the knowledge of cost-effectiveness in this area.

2. The necessary interaction of operational experience and new display design appears to exist by chance at present. Appropriate steps should be taken to improve this interchange of information, particularly in view of the rapid growth of technology in this area.

3. A better appreciation is needed of the amount of effort and attention a pilot devotes to the stabilization of a V/STOL aircraft.

4. Multi-axis mathematical models of pilots are needed especially for low frequencies covering the region of interest for manoeuvring flight. Motions of higher frequency are more efficiently compensated by an automatic stabilisation system.

5. Research is needed to study how pilots are able to cope with the changing effects of various controls throughout transition and to investigate whether more radical control designs (eg separate translational control for each of the three axes) are justified. And in turn, there should be a closer integration of the design of both controls and displays.

6. The range of possible approach profiles (eg minimum fuel, minimum time, maximum descent rate, etc) for specific aircraft should be examined in detail before displays are designed for such aircraft in order to establish limiting conditions.

7. Approach and landing under high crosswinds poses particular problems for V/STOL aircraft. Theoretical and flight investigations in this area should be carried out as soon as possible.

8. Techniques of using curved approaches (both in plan and elevation), which could be useful for obstacle clearance and in many operational situations, should be investigated.

9. The determination of accuracy and range requirements for a tactical aid should be established bearing in mind the flexibility of V/STOL aircraft and the possibilities of novel displays.

10. Sensors working with adequate precision in the regime of low speed flight are needed.

11. Some technique is needed of establishing maximum available thrust immediately before final descent without disturbing the existing flight path. Where multi-engines are involved this recommendation may be especially difficult to satisfy and special techniques of measuring and displaying engine health will be needed.

12. The generally accepted environment of 10^5 lx ambient brightness poses considerable difficulties for non-mechanical displays. Trials and analysis should be carried out to determine how relevant is this particular requirement.

13. Human factor research should explore the limitations of numeric displays under high workload environments. In particular some assessment should be made of the number of numeric indicators which can be managed concurrently, and of whether indicator changeover and hold characteristics are powerful parameters.

14. The display of height information is particularly difficult in combined displays and special attention should be given to this problem by the display engineers.

15. Should HUD turn out to be the elective display, some rigorous assessment is needed of field-of-view requirements.

11. REFERENCES

1. North Atlantic Treaty Organisation — V/STOL Approach and Landing Systems. Advisory Group for Aerospace Research and Development. AGARD Report 560. 1967.

2. Reeder, J.P. — The changing World of the Pilot in the Next Decade-V/STOL Aircraft Operations. Paper presented at the Human Factors Society National Symposium, San Francisco, Calif. October 1970.

3. — A new Guidance System for Approach and Landing. RTCA Document No. DO-148, prepared by SC-117. December 18, 1970.

4. — Non-Visual Precision Approach and Landing Guidance Systems (PALS). ICAO AWOP Memorandum No. 82. March 16, 1971.

5. North Atlantic Treaty Organisation — V/STOL Landing Systems. Advisory Group for Aerospace Research and Development. AGARD Report VLS/65. 1965.

6. Millward, R.W. — Some Thoughts on V/STOL and Approach Techniques. NATO Advisory Group for Aerospace Research and Development. AGARD Conference Proceedings No. 55, Paper No. 7. 1968.

7. Cacioppo, A.J. — Pilot Information Utilization: A Study in Human Response Dynamics. Goodyear Aircraft Corp. Report GER-7686. 1963.

8. Kelley, C.R. — Manual Control. Dunlap and Associates, Santa Monica, Calif. 1964.

9. Young, L.R.; Green, D.M.; Elkind, J.I.; Kelly, J.A. — The adaptive dynamic Response Characteristics of the human Operator in simple Manual Control. National Aeronautics and and Space Administration. NASA Technical Note TN D-2255. 1964.

10. Farley, J.F. — Some Thoughts on All-Weather Operation of Jet V/STOL Aircraft including the Use of Restricted Sites. Royal Aeronautical Society. Paper to Test Pilots' Group. 1968.

11. Gracey, W. — Evaluation of Cross-Pointer-Type Instrument Display in Landing Approaches with a Helicopter. National Aeronautics and Space Administration. NASA Technical Note TN D-3677. November 1966.

12. Gracey, W. — Evaluation of Moving Map Instrument Display in Landing Approaches with a Helicopter. National Aeronautics and Space Administration. NASA Technical Note TN D-3986. May 1967.

13. Kelley, J.R.; Niessen, F.R.; Sommer, R.W. — Evaluation of a VTOL Flight-Director Concept during Constant-Speed Instrument Approaches. National Aeronautics and Space Administration. NASA Technical Note TN D-5860. June 1970.

14. Garren, J.F.; Kelley, J.R.; Sommer, R.W.; Di Carlo, D.J. — Flight Investigation of VTOL Control and Display Concept for performing decelerating Approaches to an Instrument Hover. National Aeronautics and Space Administration. NASA Technical Note TN D-6108. February 1971.

15. Bondurant, R.A., III; Kearns, J.H., III — V/STOL Vertical Situation Display. Paper presented at the SAE National Aeronautic and Space Engineering Meeting, Los Angeles, Calif. Society of Automative Engineers. Paper No. 690694. October 1969.

16. Gracey, W. — Comparison of Information Display Concepts for Landing of VTOL Aircraft. National Aeronautics and Space Administration. NASA Technical Note TN D-4861. November 1968.

17. Sommer, R.W.; Dunham, R.E. — Evaluation of a Contact-Analog Display in Landing Approaches with a Helicopter. National Aeronautics and Space Administration. NASA Technical Note TN D-5241. 1969.

18. Cross, K.D. — Utility of the Vertical Contact-Analog Display for Carrier Landings - a Diagnostic Evaluation. NATO Advisory Group for Aerospace Research and Development. Paper to Conference on Guidance and Control Displays. Paris. October 1971.

19. — Theoretische und experimentelle Untersuchungen von Verfahren für ein Kombiniertes Navigations- und Allwetter-Landesystem (KNL) für V/STOL Flugzeuge. Teldix Luftfahrt-Ausrüstungs-GmbH, Heidelberg, Germany. June 1967.

20. Dukes, T.A. — Helicopter IFR Flight Path Control System. NATO Advisory Group for Aerospace Research and Development. Paper to Conference on Helicopter Guidance and Control Systems. Konstanz, Germany. June 1971.

21. Wolf, J.D.
Barrett, M.F.
IFR Steep-Angle Approach: Effects of System Noise and Aircraft Control Augmentation Variables. Honeywell Inc., Minneapolis. JAHAIR Report No. 700810. April 1971.

22. Smith, J.H.
The Impact of Advancing Technology on the Evolution of Electronic Head-Up Display Systems. NATO Advisory Group for Aerospace Research and Development. Paper to Conference on Guidance and Control Displays. Paris. October 1971.

23. Walters, D.J.
Landing VTOL Aircraft in Adverse Conditions and some possible Solutions. North Atlantic Treaty Organisation. Paper to AGARD Guidance and Control Panel. Symposium on Aircraft Landing Systems, Cambridge, Mass. 1969.

24. Bergström, B.
Interpretability Studies of Electronic Flight Instruments. Saab Aktiebolag, Linköping, Sweden. Saab TN 61. January 1967.

25. Hearne, P.A.
Hussey, D.W.
Some Engineering and Operational Factors of Multi-Sensor Displays. NATO Advisory Group for Aerospace Research and Development. Paper to Conference on Guidance and Control Displays. Paris. October 1971.

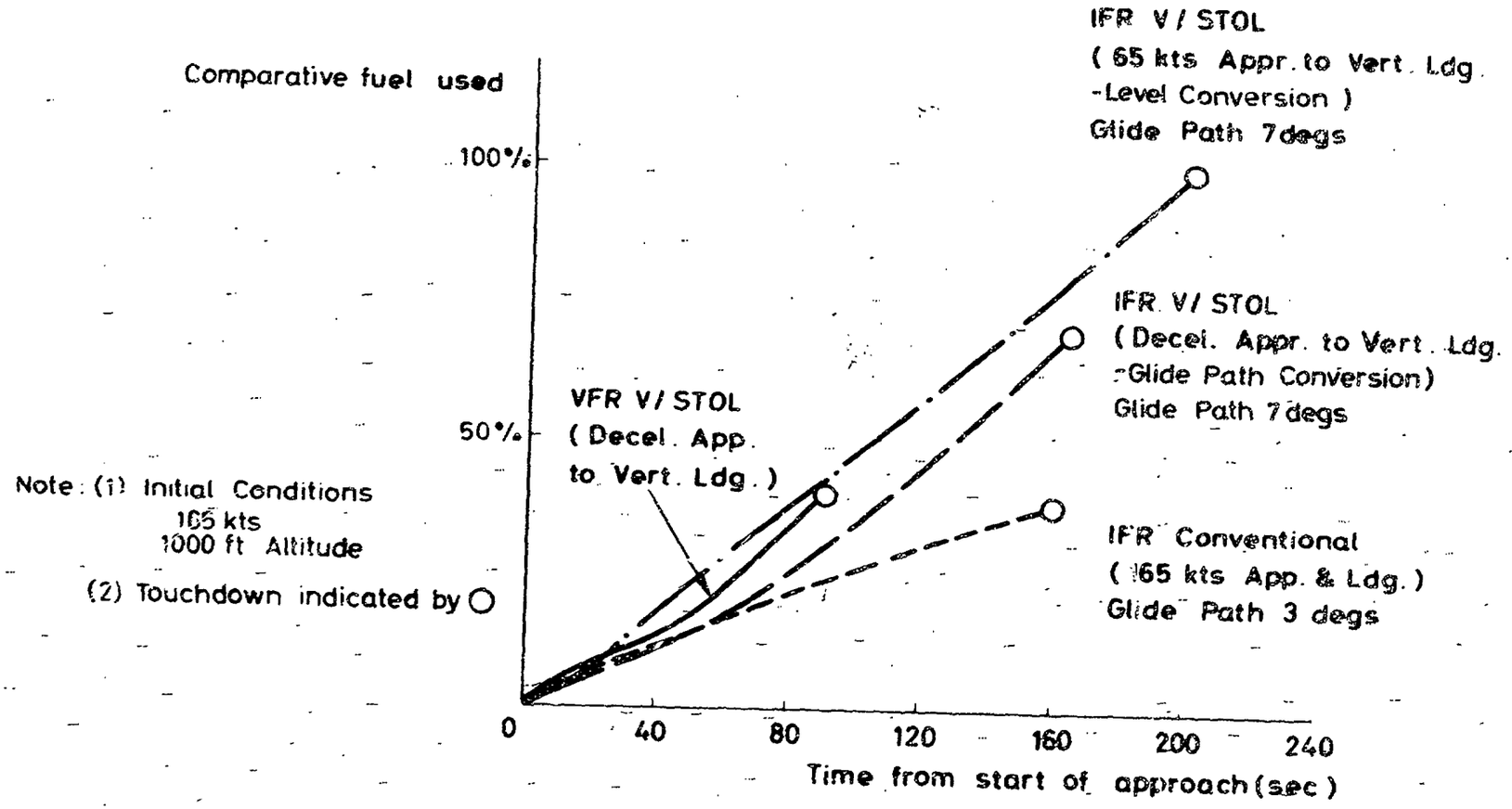

Fig. 1: Time and fuel required for several types of final approaches calculated for a P. 1127 V/STOL aircraft (after Ref. 2)

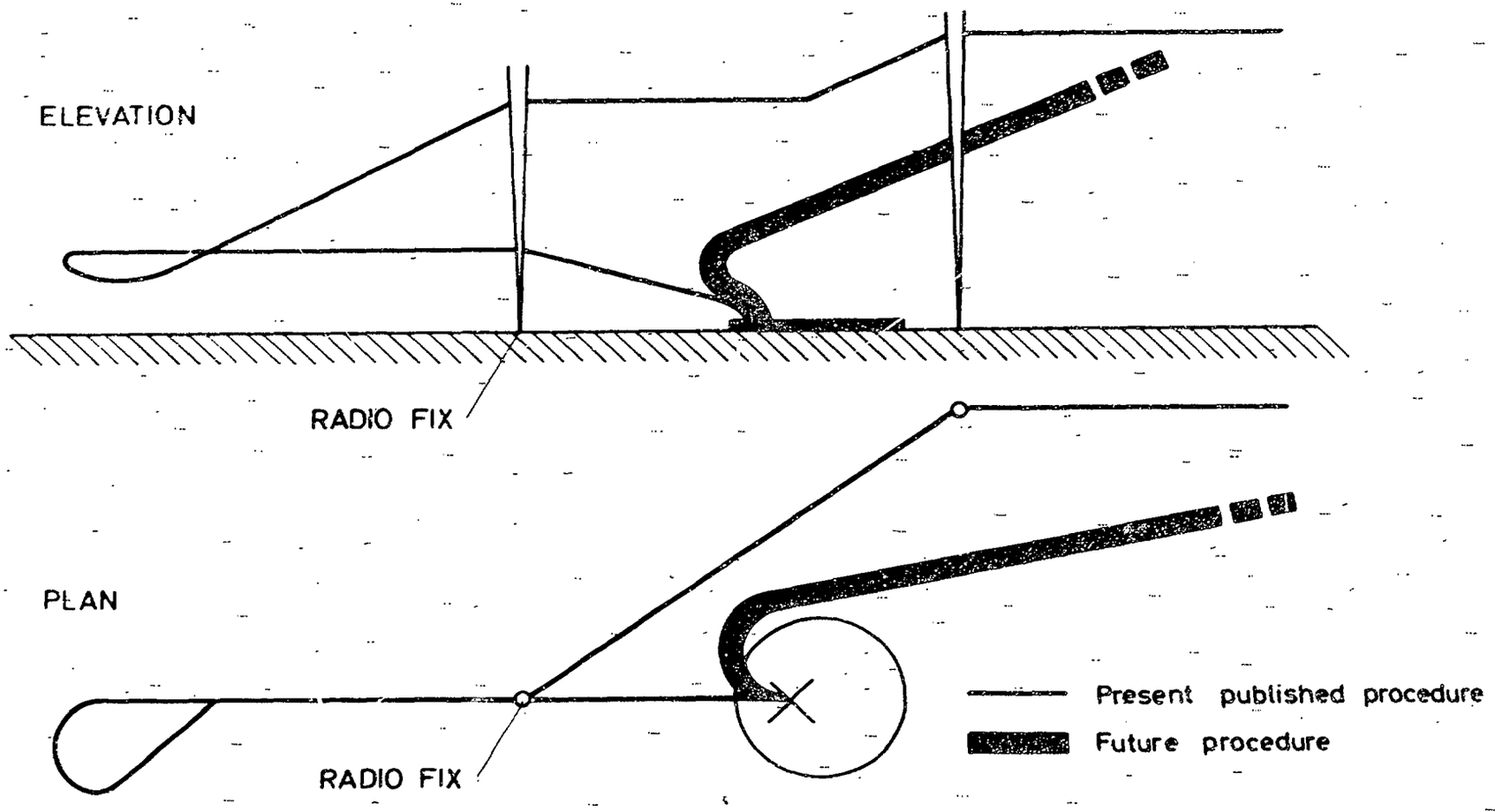

Fig. 2: Typical V/STOL instrument approach paths for the present and future (after Ref. 2)

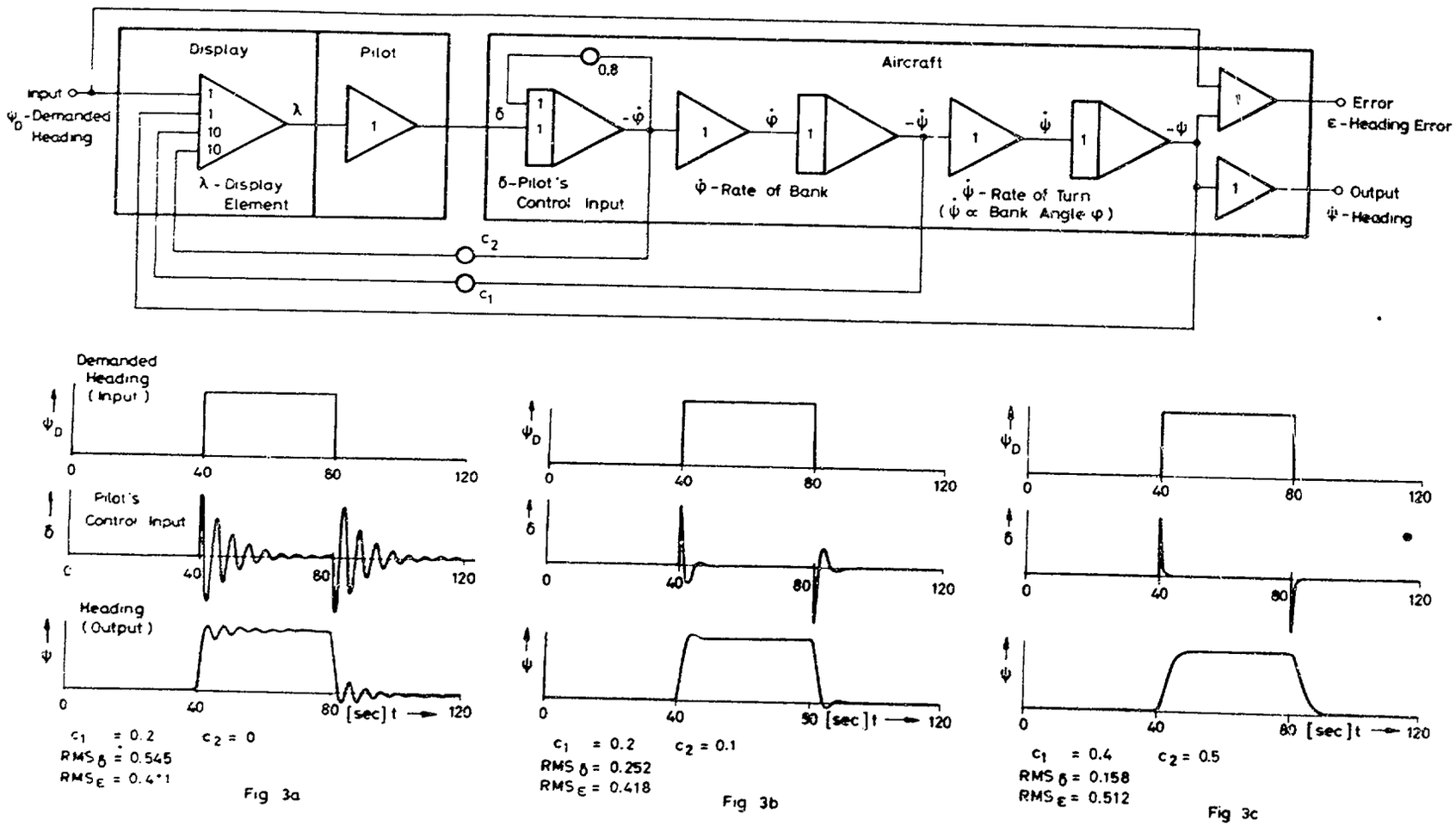

Fig. 3: Various responses of a simulated pilot/vehicle system for different types of quickened information display (DFVLR)

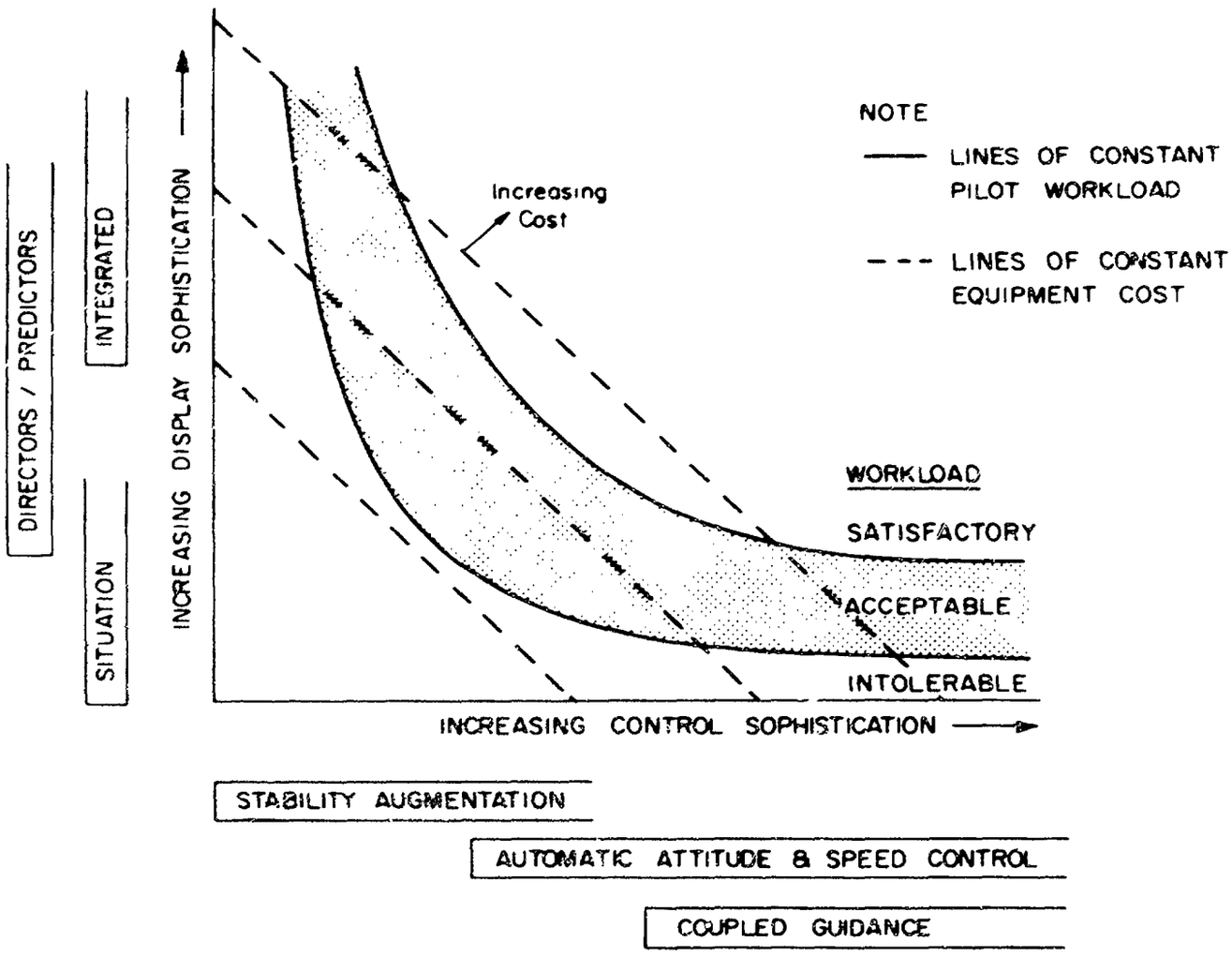

Fig. 4: Possible relationship between control and display sophistication

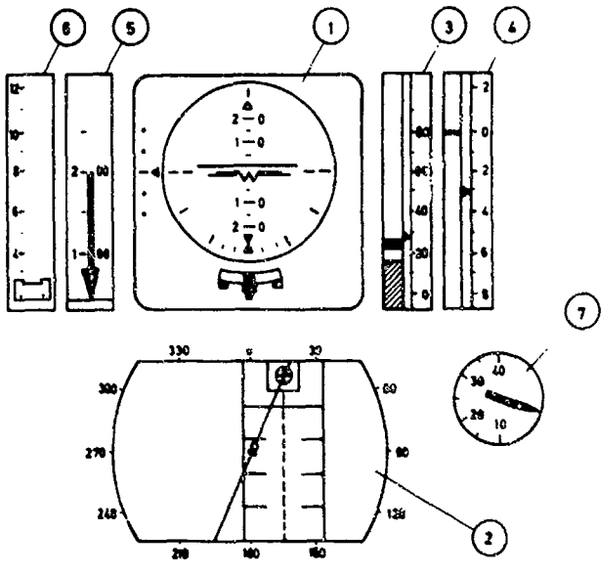

Indicator		Display	Driving Functions	
No.	Name	Element	Situation	Guidance
1	Vertical Situation Indicator	Artificial Horizon Bar	Pitch and Roll Attitude	
		Horizontal Pointer		Pitch Angle for Airspeed Control
		Moving Tab		Slope Deviation
		Cursor	Side Force	
2	Moving Map Instrument	Complete Map	Heading w.r.t. Course to Landing Site	Lateral Deviation from Landing Site, Range to Landing Site
3	Airspeed Indicator	Cursor	Airspeed	
4	Vertical Speed Indicator	Cursor	Vertical Speed	
5	Altimeter (Fine)	Vertical Scale Triangle	50 ft Break-out Height	Altitude relative to Landing Site
6	Altimeter (Coarse)	Vertical Scale		Altitude relative to Landing Site
7	Torquemeter	Dial	Applied Rotor Torque	

Test Program : Helicopter simulated IFR landing approaches at 6° glide slopes by 3 research test pilots.

Main Conclusion : Moving map instruments are easy to interpret, scaling changes are necessary, moving map and altimeter are insufficient for hovering.

Fig. 5: NASA Moving Map Instrument Display (from Ref. 12)

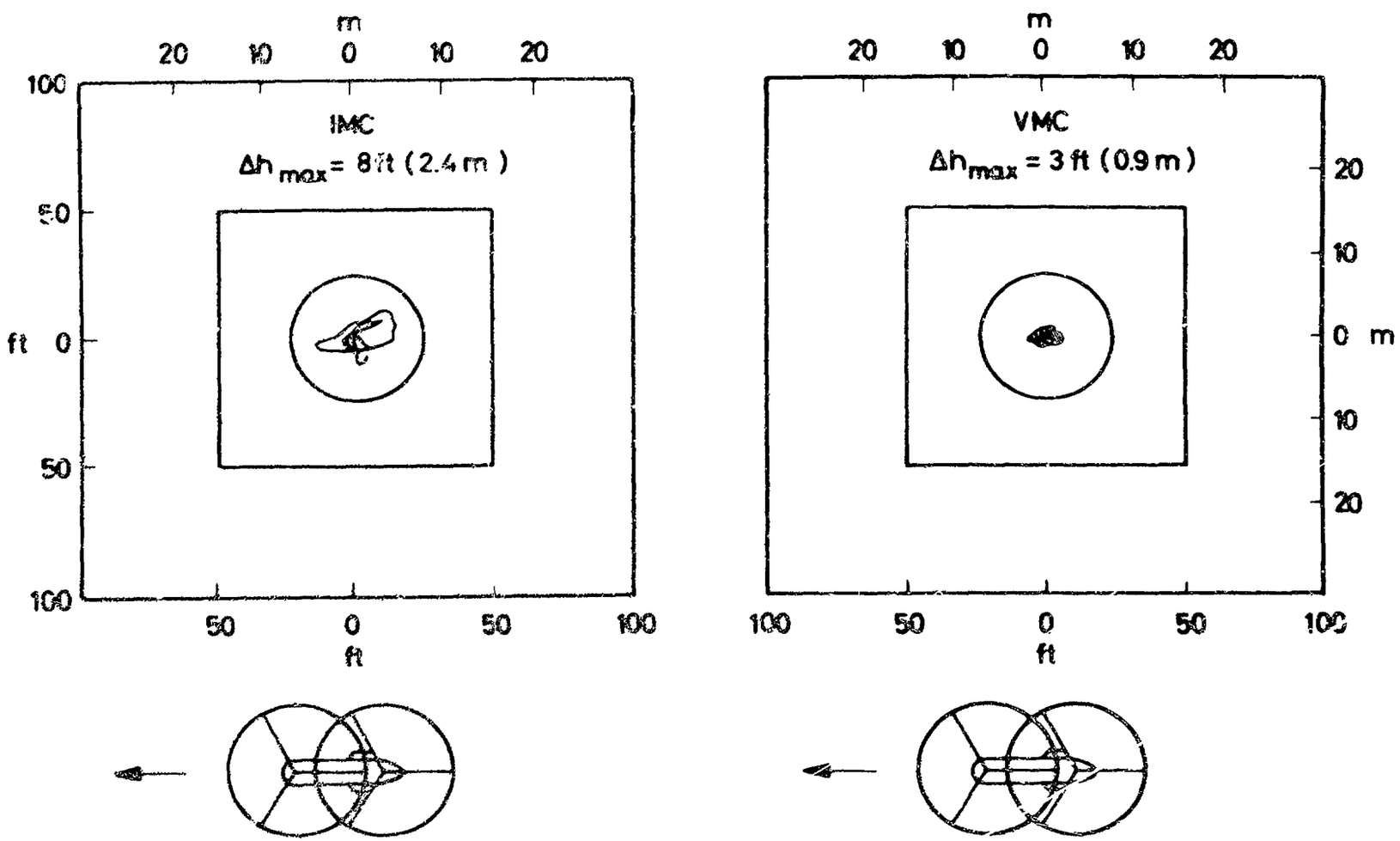

Fig. 6: Two representative attempts to hover over a fixed point using the NASA Moving Map Instrument Display (from Ref. 14)

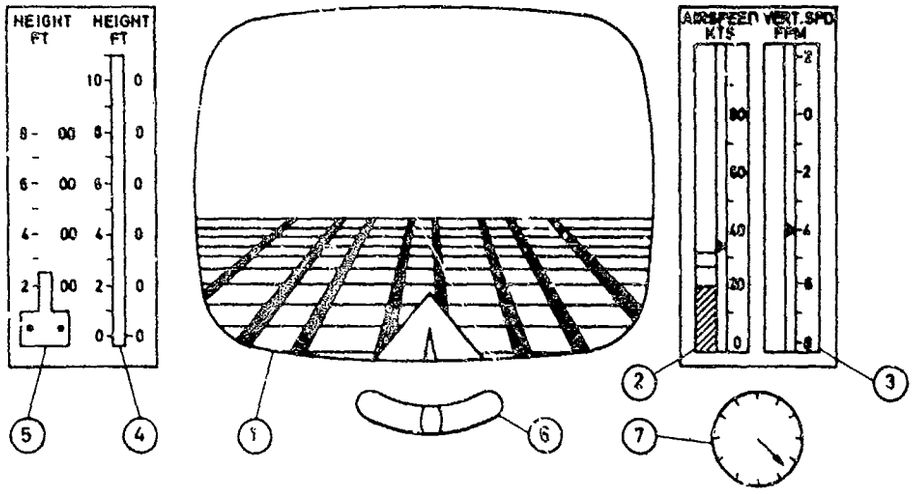

Indicator		Display	Driving Functions	
No.	Name	Element	Situation	Guidance
1	Contact Analog Display	Horizon Line	Pitch and Roll Attitude	
		Ground Grid	Longitudinal and Lateral Ground-speed	
		Pathway		Vertical and Lateral Deviation from Glidepath.
2	Airspeed Indicator	Cursor	Airspeed	
3	Vertical Speed Indicator	Cursor	Vertical Speed	
4	Altimeter (Fine)	Vertical Scale	Altitude Relative to Landing Site	
5	Altimeter (Coarse)	Vertical Scale	Altitude Relative to Landing Site	
6	Slip Indicator	Cursor	Side Force	
7	Torquemeter	Dial	Applied Rotor Torque	

Test Program : Helicopter in IFR landing-approaches at 6° glide slopes by 4 research test pilots.

Main Conclusions: The perspective format represents an improvement over separated vert.-hor. displays.
Insufficient control of course, slope and airspeed.

Fig. 7: NASA Contact Analog Display (from Ref. 17)

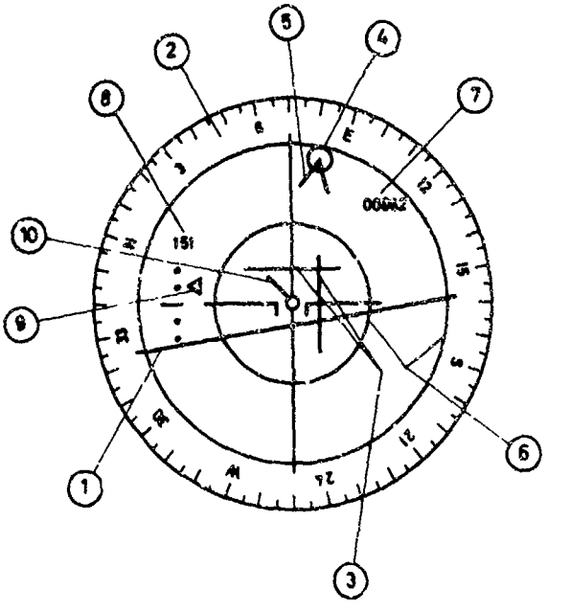

Hover Mode

Display Element		Driving Functions	
No.	Name	Situation	Guidance
1	Horizon Bar	Pitch and Roll Attitude	
2	Compass Rose	Heading	
3	Horizontal and Vertical Lines		Director Command Slope and Course
4	Landing Site		Range and Bearing to Landing Site
5	Sector		Approach Sector
6	Range Circles	Range	
7	Digits	Altitude	
8	Digits	Airspeed	
9	Cursor	Airspeed Deviation	
10	Vector	Groundspeed	

Test Program : Fixed-base simulation by 10 pilots.

Main Conclusion : Blind landing of simulated VTOL aircraft feasible.

Fig. 8: Teldix VTOL Hover Display (from Ref. 19)

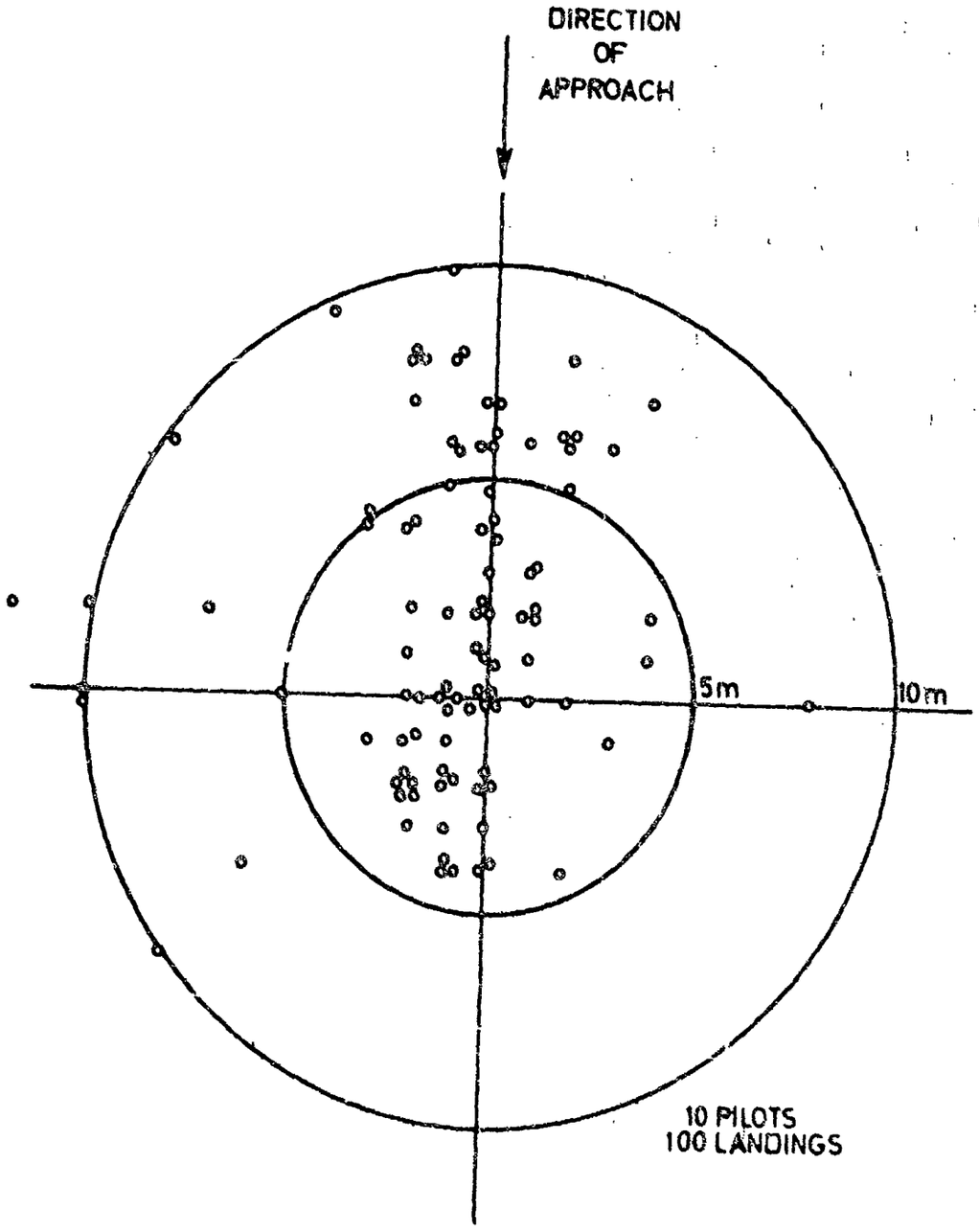

Fig. 9: Landing Miss Distances at Touchdown obtained with the Teldix VTOL Hover Display during simulator trials (from Ref. 19)

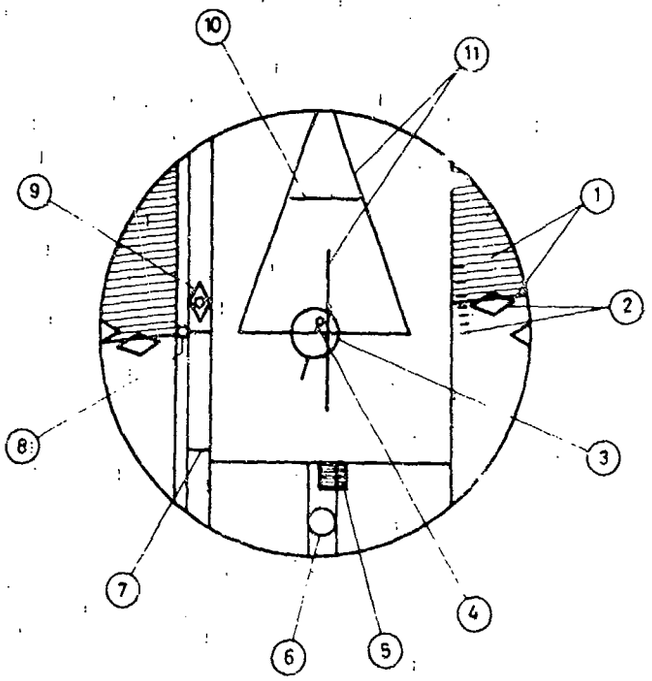

Landing Mode

Display Element		Driving Functions	
No.	Name	Situation	Guidance
1	Horizon and "Sky"	Pitch and Roll Attitude	
2	Pitch Scale and Reference	Pitch Attitude	
3	Helicopter Symbol		Lateral Deviation from desired Flight Path, Heading Deviation
4	Vector		Velocity Error
5	Turn Indicator	Rate of Turn	
6	Ball	Side Force	
7	Ground Proximity Line	Altitude above Landing Site	
8	Circle		Collective Stick Position Error
9	Diamond		Vertical Deviation from desired Flight Path
10	Touch-down Line	Range to Landing Site	Vertical Deviation from desired Flight Path
11	Reference Lines		Datum lines for elements 3, 4 and 10

Test Program : Simulator tests planned for the future.

Main Conclusions : Integration of all necessary flight information into one single display has been achieved.

Fig. 10: Princeton University Integrated Helicopter Display (from Ref. 20)

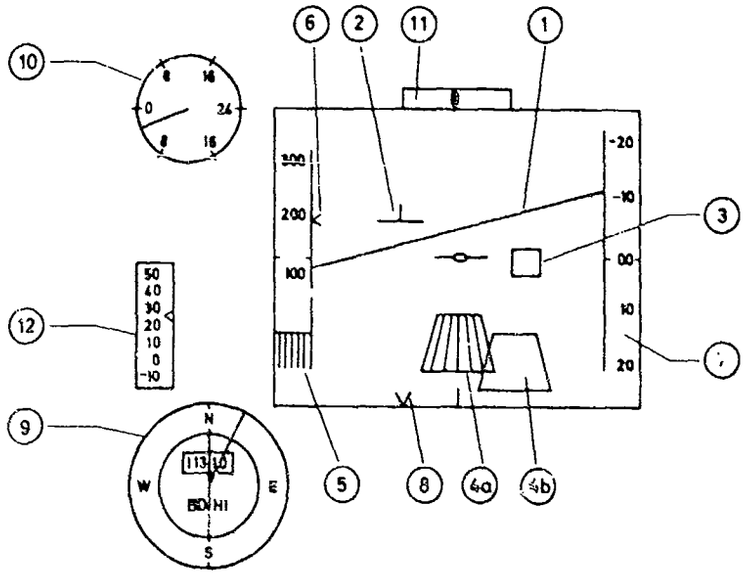

Indicator		Display	Driving Functions	
No.	Name	Element	Situation	Guidance
1	IEVD	Artificial Horizon	Pitch and Roll Attitude	
2	"	Lead Vehicle Symbol		Quickened Longitudinal (Pitch) and Lateral (Roll) Off-Set
3	"	ILS-Square		Vertical and Lateral Glide-Path Deviation
4a		Fixed Reference		Longitudinal and Lateral Off-Set during Hover and Descent
4b		Trapezium		
5	"	Altitude Tape	Altitude relative to Landing Site	
6	"	Altitude Cursor		Altitude Error and Altitude Rate Error
7	"	Speed Tape	Ground Speed	
8	"	Heading Cursor	Approach Heading (rel. to Aircraft Heading)	
9	BDHI	Dial	Aircraft Heading	
		Radius Line		Rel. Bearing
		Digits	Range	
10	Vert. Speed Indicator	Dial	Vertical Speed	
11	Sideslip Ind.	Lateral Scale	Side Force	
12	Vector Angle Ind.	Vertical Scale	Collective Vector Angle	

Test Program : Simulation of helicopter and VTOL in steep-angle approaches up to 24° glide slopes by groups of 6 pilots.

Main Conclusion : Performance of IFR-steep-angle approaches and landings is possible. Effects of approach modes are minor.

Fig. 11: JANAIR Integrated Electronic Vertical Display (from Ref. 21)

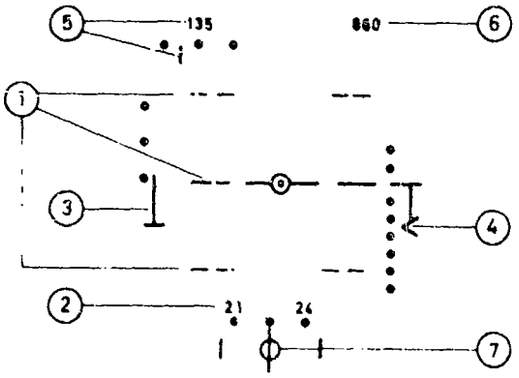

Display Element		Driving Functions	
No.	Name	Situation	Guidance
1	Horizon and Pitch Bars	Pitch and Roll Attitude	
2	Digits	Heading	
3	Moving Tape	Quasi Angle of Attack	
4	Cursor	Vert. Speed	
5	Digits and Cursor	Selected Airspeed	Airspeed Error
6	Digits	Altitude	
7	Circle	Side Force	

Test Program : In use for Harrier.

Main Conclusion : Satisfactory for VMC only, due to a lack of guidance information.

Fig. 17: Smiths Head-up Display for the Harrier aircraft (from Ref. 22)

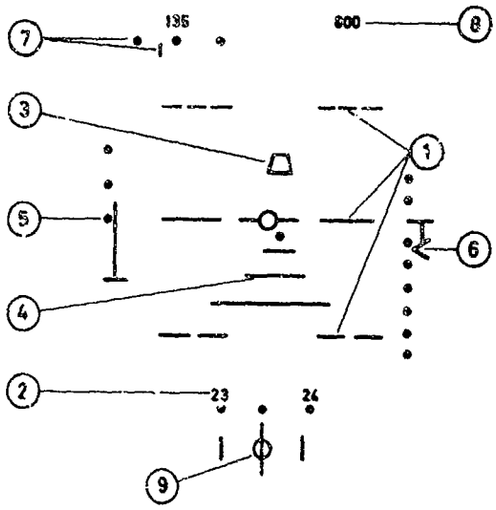

Display Element		Driving Functions	
No.	Name	Situation	Guidance
1	Horizon and Pitch Bars	Pitch and Roll Attitude	
2	Digits	Heading	
3	Trapezium		Range, Range Rate Rel. Bearing
4	Pyramid Lines		Height, Height Rate Rel. Bearing
5	Moving Tape	Quasi Angle of Attack	
6	Cursor	Vert. Speed	
7	Digits and Cursor	Selected Airspeed	Airspeed Error
8	Digits	Altitude	
9	Circle	Side Force	

Test Program : Simulator and planned flight trials.

Main Conclusion : Transition is feasible.

Fig. 13: RAE "Guidance" Head-up Display (from Ref. 23)

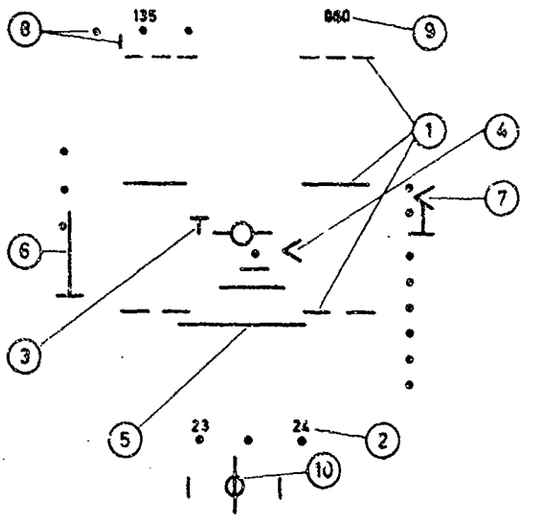

Display Element		Driving Functions	
No.	Name	Situation	Guidance
1	Horizon and Pitch Bars	Pitch and Roll Attitude	
2	Digits	Heading	
3	T-Symbol		Thrust Defl. Angle Err.
4	<-Symbol		Deflection Angle Error
5	Pyramid Lines		Height, Height Rate Rel. Bearing
6	Moving Tape	Quasi Angle of Attack	
7	Cursor	Vert. Speed	
8	Digits and Cursor	Selected Airspeed	Airspeed Error
9	Digits	Altitude	
10	Circle	Side Force	

Test Program : Simulator trials using groups of pilots.

Main Conclusions : Accurate transition possible, workload reduced, detrimental to true engine and flight information knowledge.

Fig. 14: RAE "Control Director" Head-up Display (from Ref. 23)

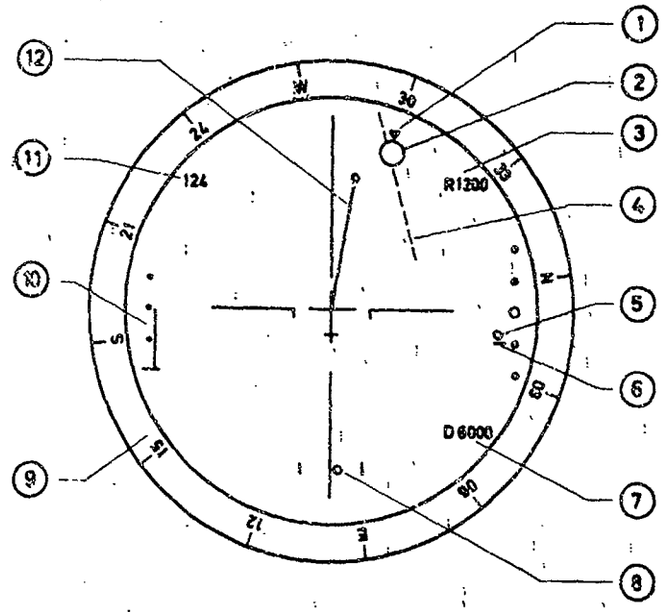

Display Element		Driving Functions	
No.	Name	Situation	Guidance
1	Wind Symbol	Wind Direction	
2	Landing Pad		Rel. Position of Landing Site
3	Digits	Radio Altitude	
4	Dotted Line		Req. Appr. Direction
5	Circle	Rate of Descent	
6	Line		Req. Rate of Descent
7	Digits	Distance to go	
8	Circle	Side Force	
9	Compass rose	Heading	
10	Moving Tape	Angle of Attack	
11	Digits	Airspeed or Ground-speed	
12	Velocity Vector	Speed Error	

Test Program : Not available.

Main Conclusion : Not available.

Fig. 15: A possible combined transition display (RAE proposal)

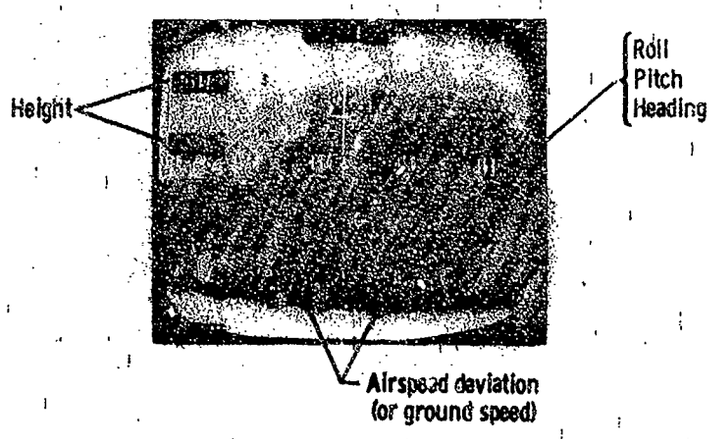

Fig. 16: Display with predominantly numerical indications (from Ref. 16)

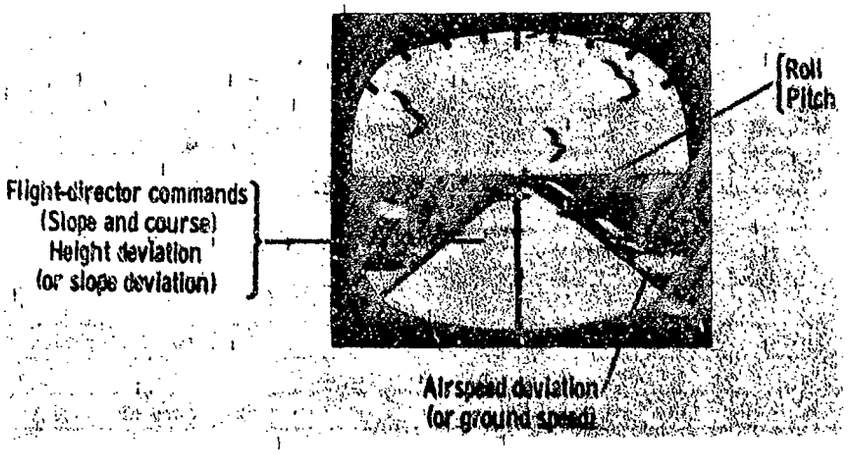

Fig. 17: Display with contact analog representation (from Ref. 16)

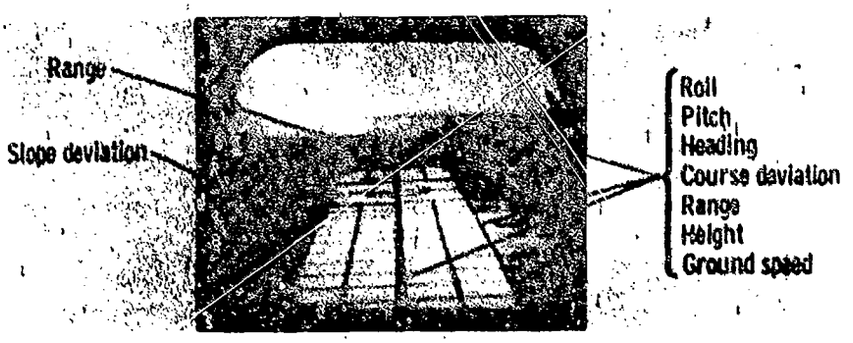

Fig. 18: Display with contact analog representation (from Ref. 16)

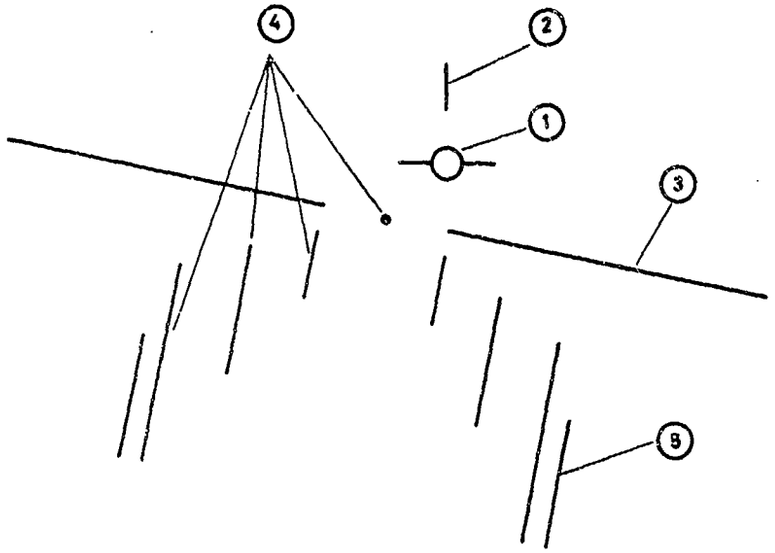

Display Element		Driving Functions	
No.	Name	Situation	Guidance
1	Velocity Vector Symbol	Flight Path Angle	Heading Error
2	Airspeed Error Indicator		Airspeed Error
3	Horizon Line	Pitch and Roll	
4	Pole Track & Aiming Dot		Altitude Error
5	Reference Height Pole	Altitude	

Test Program : N.A. (as regards V/STOL).

Main Conclusion : N.A. (as regards V/STOL).

Fig. 19: SAAB Head-up Display (from Ref. 24)

BIBLIOGRAPHY

Adams, G.D. — V/STOL Approach System Flight Tests. Federal Aviation Agency, Atlantic City. Report RD-66-95. 1966.

Adams, G.D. — V/STOL Approach System Steep Angle Flight Tests. Federal Aviation Agency, Atlantic City. NAFEC Report No. RD-66-68. September 1966.

Baron, S.; Kleinman, D.L.; Levison, W.H. — An Optimal Control Model of Human Response. Automatica, 6. 1970. pp. 371-383.

Behan, R.A.; Siciliani, F.A. — Landing Task and Pilot Acceptance of Displays. Journal of Aircraft, 4. 1967. pp. 141-145.

Belik, L.L. — Modelling of Visual Distance Perception in VTOL Aircraft. Kosmicheskaia Biologiia I Meditsina, 3. 1969. pp. 66-70.

Bollinger, W. — Electronic Instrumentation for VTOL Aircraft. Dornier-Werke GmbH., München. Dornier-Post No. 2-3. 1968. pp. 16-19.

Charles, M.; Fisher, I.A.; Gregory, J.D.L. — More Notes on the Establishment of Aircraft Approach Limitations for Helicopters. Aeroplane and Armament Experimental Establishment, Boscombe Down, England. A & AEE Note 2038. 1970.

Cross, K.D.; Cavallero, F.R. — Utility of the Vertical Contact-Analog Display for Carrier Landings - A Diagnostic Evaluation. NATO Advisory Group for Aerospace Research and Development. Paper to Conference on Guidance and Control Displays. Paris. October 1971.

Cundari, F.L.; Nicholson, R.M.; Gurman, B.S.; Baker, C.A. — VTOL Displays and Controls for All-Weather Flight. NATO Advisory Group for Aerospace Research and Development. AGARD Conference Proceedings No. 55, Paper No. 19. 1968.

Curties, M.C. — Helicopter All-Weather Operation - Equipment for the Transport Role. The Aeronautical Journal, 72. 1968. pp. 229-236.

Curtin, J.G.; Emery, J.H. — The Helicopter Flight Evaluation of a Head-Up Display. Bell Helicopter, Fort Worth, Texas. Technical Report D228-420-010. 1966.

Curtin, J.G.; Emery, J.H.; Elam, C.B.; Dougherty, D.J. — Flight Evaluation of the Contact Analog Pictorial Display System. Bell Helicopter, Fort Worth, Texas. Technical Report D228-420-009. 1966.

Dalhamer, W.A.; Rheinlander, T.W. — 3, 4, 5 and 6 Degree Instrument Approaches in the C-123 Aircraft with Talar III Guidance. Bunker-Ramo Corporation, Canoga Park, Calif. Engineering Report SA66-5. September 1966.

Demaio, D.A. — An Airspace Utilization Model for V/STOL Terminal Operations. National Aeronautics and Space Administration. Washington, D.C. NASA Report CR-118315. 1971.

Dougherty-Strother, D. — Advances in V/STOL Cockpit Information. NATO Advisory Group for Aerospace Research and Development. AGARD Conference Proceedings No. 55, Paper No. 26. 1968.

Dukes, T.A. — An Integrated Display for Trajectory Control of Helicopters and VTOL Aircraft. Paper to International Symposium on Man-Machine Systems, Cambridge. IEEE Conference Record No. 69C58-MMS. 1969.

Dunham, R.E.; Sommer, R.W. — Evaluation of a Moving-Graph Instrument Display for Landing Approaches with a Helicopter. National Aeronautics and Space Administration, Langley Research Center. NASA Technical Note TN D-6025. 1970.

Elkins, H.C.; Hatfield, J.J. — Televised Graphic Displays for Steep Approach-To-Landing Research. Society for Information Display. Paper to 11th National Symposium, New York. 1970.

Farley, J.F. — Some Thoughts on All-Weather Operation of Jet V/STOL Aircraft Including the Use of Restricted Sites. Royal Aeronautical Society, London. Paper to Test Pilots' Group. 1968.

Feistel, T.W.; Drinkwater III, F.J. — Flight Tests of a One-Man Helicopter and a Comparison of its Handling Qualities with Those of Larger VTOL Aircraft. National Aeronautics and Space Administration. NASA Technical Note TN D-3060. October 1965.

Fellinger, J.G.
Hardwicke, R.M.
Research and Development of a Control-Display Subsystem for a Tactical V/STOL Weapon System. Wright-Patterson Air Force Base, Ohio. Technical Report AFFDL-TR-66-118. December 1966.

Fisher, I.A.
A Method for Establishing Instrument Approach Limitations for Helicopters. Aeroplane and Armament Experimental Establishment, Boscombe Down, England. A & AEE Note 2031. 1970.

Francis, B.C.
Display Systems for Vertical Take-Off Transport Aircraft. IEE Conference on Displays, Loughborough, England. Proceedings No. 80. 1971. pp. 301-305.

Fuller, P.R.
Development and Evaluation of a Two-Color Electroluminescent V/STOL Hover Display. Society for Information Display. Proceedings of the 8th National Symposium. 1967.

Garren, J.F.
Kelley, J.R.
Sommer, R.W.
Dicarlo, D.J.
Flight Investigation of VTOL Control and Display Concept for Performing Decelerating Approaches to an Instrument Hover. National Aeronautics and Space Administration, Langley Research Center. NASA Technical Note TN D-6108. 1971.

Garren, J.F.
Kelley, J.R.
Sommer, R.W.
VTOL Flight Investigation to Develop a Decelerating Instrument Approach Capability. Society of Aeronautical Engineers. Paper to National Meeting. 1969.

Goldberger, S.
On the Relative Importance of the Low Speed Control Requirement for V/STOL Aircraft. Arnold Air Force Station, Tennessee. Technical Report AEDC-TR-66-205. 1966.

Gracey, W.
Evaluation of Two Instrument Landing Displays in Simulated IFR Approaches with a Helicopter. National Aeronautics and Space Administration, Langley Research Center. NASA Technical Memorandum TM-X-59866. 1967.

Gracey, W.
Operational Aspects of Steep VTOL Approaches as Determined from Helicopter Tests Under Simulated IFR Conditions. National Aeronautics and Space Administration, Langley Research Center. NASA Technical Memorandum TM-X-60457. 1967.

Gracey, W.
Comparison of Information Display Concepts for Landing of VTOL Aircraft. National Aeronautics and Space Administration, Langley Research Center. NASA Technical Note TN D-4861. 1968.

Gracey, W.
Sommer, R.W.
Tibbs, D.F.
Evaluation of a Moving-Map Instrument Display in Landing Approaches with a Helicopter. National Aeronautics and Space Administration, Langley Research Center. NASA Technical Note TN D-3986. 1967.

Gracey, W.
Sommer, R.W.
Tibbs, D.F.
Evaluation of a Closed-Circuit Television Display in Landing Operations with a Helicopter. National Aeronautics and Space Administration, Langley Research Center. NASA Technical Note TN D-4313. 1968.

Gracey, W.
Sommer, R.W.
Tibbs, D.F.
Evaluation of Cross-Pointer Type Instrument Display in Landing Approaches with a Helicopter. National Aeronautics and Space Administration, Langley Research Center. NASA Technical Note TN D-3677. 1966.

Grochowski, F.
Landing VTOL Aircraft in All Weathers. Dornier-Werke GmbH., München. Dornier-Post No. 2-3. 1968. pp. 12-15.

Hainsworth, D.
V/STOL Control-Display System Requirements and Simulation Study. Wright-Patterson Air Force Base, Ohio. Technical Report AFFDL-TR-65-24. July 1965.

Hall, A.W.
McGinley, D.J.
Flight Investigation of Steep Instrument Approach Capabilities of a C-47 Airplane Under Manual Control. National Aeronautics and Space Administration. NASA Technical Note TN D-2559. January 1965.

Honeywell, Inc.
Analysis of Pilot Survey on V/STOL Approaches and Landing. JAWAIR Report 681215 1970.

Horsby, R.C.
A Piloted Simulator Study of the Controlled Deceleration Transition of a VTOL Aircraft in a Steep Descent. Aeronautical Research Council, London. Paper ARC 31415. 1969.

Howard, R.W.
Flight Systems, Flight Deck Display and Automatic Flight Control. British Airline Pilots' Association. Proceedings of a Technical Symposium on V/STOL in Civil Aviation. 1970. pp. 123-141.

Hunter, I.N.
Wetherway, J.E.
Landing Guidance for VTOL Aircraft. British Airline Pilots' Association. Proceedings of a Technical Symposium on V/STOL in Civil Aviation. 1970. pp. 208-231.

Hunter, G.S. — Pilot Role Grown in VTOL Control Concept. Aviation Week and Space Technology, 86. 1967. pp. 92-102.

Huntley, E. — Optimal Paths for Minimizing Landing Transition Distance for Jet-Lift VTOL Aircraft. Royal Aircraft Establishment, Bedford. RAE Technical Report TR 70134. 1970.

Innis, R.C.; Holzhauser, C.A.; Gallant, R.P. — Flight Tests under IFR with an STOL Transport Aircraft. National Aeronautics and Space Administration, Ames Research Center. NASA Technical Note TN D-4939. 1968.

Jones, S.S.D. — Guidance and Control Philosophy for All-Weather Landing. Journal of the Institute of Navigation, 23. 1970. pp. 277-291.

Jones, S.S.D.; Phillips, C.M. — ATC and Landing Aids for VTOL Aircraft. Royal Aeronautical Society. Paper to Two-Day Convention on Short-Range Transport. 1969.

Kaufman, L.A. — Integrated Avionic System Design for Helicopters and VTOL. NATO Advisory Group for Aerospace Research and Development. Paper to Conference on Hybrid Navigation Systems. Delft, Netherlands. 1969.

Kearns, J.H.; Bondurant, R.A. — VTOL IFR Technology Program. NATO Advisory Group for Aerospace Research and Development. AGARD Committee Paper 58. 1968.

Kelley, J.R.; Garren, J.F.; Deal, P.L. — Flight Investigation of V/STOL Height-Control Requirements for Hovering and Low-Speed Flight under Visual Conditions. National Aeronautics and Space Administration. NASA Technical Note TN D-3977. May 1967.

Kelley, J.R.; Niessen, F.R.; Sommer, R.W. — Evaluation of a VTOL Flight-Director Concept during Constant-Speed Instrument Approaches. National Aeronautics and Space Administration, Langley Research Center. NASA Technical Note TN D-5860. 1970.

King, K.P.; McPherson, A. — A Piloted Simulator Study of a Jet VTOL Aircraft in Partially Jet-Borne Flight. Royal Aircraft Establishment, Farnborough. RAE Technical Report TR 68301. 1968.

Kornstädt, H.J.; Pfennigstorf, J. — Evaluation of an Integrated Flight Display for the Manual IFR-Landing of VTOL Aircraft. NATO Advisory Group for Aerospace Research and Development. Paper to Conference on Guidance and Control Displays. Paris. October 1971.

Lawry, P. — The Impact of Electronic Displays on Aircraft Control. NATO Advisory Group for Aerospace Research and Development. AGARD Committee Paper 58. 1970.

Litchford, G.B.; Saganowich, J.T. — Helicopter Landing Systems. Vertical World, 2. October 1967. pp. 28-32.

Lyon, H.B. — V/STOL Displays for Approach and Landing. A Presentation of the JANAIR Program. Wright-Patterson Air Force Base, Air Force Flight Dynamics Laboratory, Ohio. May 1970.

Marquardt, F. — X-22A Tri-Service V/STOL Aircraft: Final Progress Report. Bell Helicopters, Buffalo. Report 2127-933073. 1969.

Mauldin, B.P. — Choppers in All Weather Flight. Vertical World, 2. August 1967. pp. 22-28.

McGregor, D.H. — A Flight Investigation of Various Stability Augmentation Systems for Jet-Lift V/STOL Aircraft (Hawker-Siddeley P 1127) using an Airborne Simulator. National Research Council. Ottawa. NAE Aero Report LR-500. 1968.

Mendela, D.K. — Recent Experience with a Fixed Base Simulator in the Investigation of Handling and Performance Problems of the VTOL Transport Aircraft. American Institute for Aeronautics and Astronautics. Paper AIAA-70-345. 1970.

Miller, J.G. — Human Factors in V/STOL Aircraft Operation. Lear Siegler, Inc., Santa Monica, Calif. 1968.

Millward, R.W. — Some Thoughts on V/STOL Displays and Approach Techniques. NATO Advisory Group for Aerospace Research and Development. AGARD Conference Proceedings No. 55, Paper No. 7. 1968.

Monkhouse, W.; Bowen, S. — Pilot Disorientation in Night [illegible]-Borne Helicopter Operations. Canadian Defence Forces, [illegible]-10, Shear Water. 1970.

Morrall, J.C. — The Pilot's Contribution in Cat. II Operations and the Potential Contribution of Head-Up Display. Royal Aircraft Establishment, Bedford. RAE Technical Report TN 66195. 1966.

North Atlantic Treaty Organisation — V/STOL Approach and Landing Systems. Advisory Group for Aerospace Research and Development. AGARD Report 560. 1967.

North Atlantic Treaty Organisation — The Aerodynamics of V/STOL Aircraft. Advisory Group for Aerospace Research and Development. AGARDograph 126. 1969.

Olson, B.A. — Display and Control Requirements Study for a V/STOL Tactical Aircraft. Wright-Patterson Air Force Base, Ohio. Technical Report AFDDL-TR-66-114. 1967.

Pickel, F.E.; Carter, C.B.; Leith, L.C. — Tactical V/STOL Weapon System Control Display Requirements Study. Wright-Patterson Air Force Base, Ohio. Technical Report AFFDL-TR-65-23. July 1965.

Pinsker, W.J.G. — Direct Lift Control. The Aeronautical Journal, 74. 1970. pp. 817-825.

Polhemus Navigation Sciences — Navigation Traffic Control Study for V/STOL Aircraft, Vol. 2. National Aeronautics and Space Administration, Washington D.C. NASA Report CR-86219. 1969.

Quigley, H.C.; Innis, R.C.; Vomaske, R.F.; Ratcliff, J.W. — A Flight Simulator Study of Directional Augmentation Criteria for a Four-Propellered STOL Airplane. National Aeronautics and Space Administration, Ames Research Center. NASA Technical Note TN D-3909. May 1967.

Reeder, J.P. — The Impact of V/STOL Aircraft on Instrument Weather Operations. National Aeronautics and Space Administration, Langley Research Center. NASA Technical Note TN D-2702. 1965.

Reeder, J.P. — V/STOL Terminal Area Instrument Flight Research. National Aeronautics and Space Administration, Langley Research Center. NASA Technical Memorandum TM-X-60456. 1967.

Rolfe, J.M.; Smith, E.M.B.; Huddleston, H.F.; Samuel, G.D.; Munro, R.J.A. — A Human Factors Investigation of the Cockpit Layout and Handling Characteristics of the Hawker P1127, Kestrel. RAF Institute of Aviation Medicine, Farnborough. IAM Report 372. 1966.

Schweizer, G. — Pilot Behaviour in VTOL Aircraft. NATO Advisory Group for Aerospace Research and Development. AGARD Report 521. 1965.

Schweizer, G.; Bollinger, W. — Some Aspects of the Display Configuration of Modern Aircraft. NATO Advisory Group for Aerospace Research and Development. AGARD Conference Proceedings No. 55, Paper No. 16. 1968.

Schweizer, G.; Staufenbiel, R. — Control Problems in VTOL Aircraft taking particular Account of Man as a Link in the Control Loop. Luftfahrttechnik Raumfahrttechnik, 15. 1969. pp. 303-310.

Semple, C.A.; Krueger, G. — V/STOL Control Display Subsystem Literature Search: Annotated Bibliography. Bunker-Ramo Corporation, Canoga Park, Calif. 1966.

Semple, C.A.; Schwartz, R.W. — Time Based Analysis of Control Activities and Information Requirements for V/STOL. Wright-Patterson Air Force Base, Ohio. Technical Report AFFDL-TR-65-193. 1966.

Sherbert, A.T. — An Investigation of the Need for Improved Displays in Heavy-Lift Helicopters. American Helicopter Society. 26th Annual National Forum, Washington,DC. Preprint No. 432. 1970.

Smith, R.E. — A Comparison of V/STOL Aircraft Directional Handling Qualities Criteria for Visual and Instrument Flight using an Airborne Simulator. National Research Council, Ottawa. NAE Aero Report LR-465. 1965.

Sonner, R.W.; Dunham, R.E. — Evaluation of a Contact-Analog Display in Landing Approaches with a Helicopter. National Aeronautics and Space Administration, Langley Research Center. NASA Technical Note TN D-5281. 1969.

Stambler, I. — V/STOLs: The Quest for Stability. Space and Aeronautics, Vol. 43, 5. May 1965. pp. 69-75.

Stehling, K.R. — Blind Landings and All-Weather Capability Systems. Vertical World, 2. January 1967. pp. 22-26.

Stein, A.J. — Avionic Systems Add to V/STOL Utility. Aviation Week and Space Technology, 86. 1968. pp. 167-172.

Suggs, R.L.
Kesselring, G.B.
Gallagher, J.E.
Litchford, G.B.
Reeder, J.P.
Papers and Discussion by a Group of Panelists on: Steep Landing Systems for VTOL Aircraft. Journal of the American Helicopter Society, 14. 1969. pp. 24-37.

Systems Technology Inc.
A Systems Analysis of Manual Control Techniques and Display Arrangements for Instrument Landing Approaches in Helicopters. JANAIR Report 690718, Vol. I. 1969.

Transonics, Inc.
Helicopter Lift Margin Indicator. JANAIR Report 690107. 1969.

Upton, H.W.
Witzke, C.H.
Rotor Blade Radar: New Hope for Unrestricted Flight. Vertiflite, 15. November 1969. pp. 2-8.

Van Houtte, M.A.J.
Display Instrumentation for V/STOL Aircraft in Landing. National Aeronautics and Space Administration, Washington, D.C. NASA Report CR-112779. 1970.

Vinje, E.W.
Miller, D.P.
An Analysis of Pilot Adaptation in a Simulated Multiloop VTOL Hovering Task. National Aeronautics and Space Administration. NASA-University 4th Annual Conference on Manual Control. 1969. pp. 95-117.

Vreuls, D.
Performance Quantification Differences between Conventional and V/STOL Aircraft. Bunker-Ramo Corporation, Canoga Park, Calif. Memorandum. February 1967.

Walters, D.J.
Landing VTOL Aircraft in Adverse Conditions and some possible Solutions. North Atlantic Treaty Organisation. Paper to AGARD Guidance and Control Panel Symposium on Aircraft Landing Systems, Cambridge, Mass. 1969.

Wilckens, V.
Schattenmann, W.
Test Results with new Analog Displays for All-Weather Landings. NATO Advisory Group for Aerospace Research and Development. AGARD Conference Proceedings No. 55, Paper No. 10. 1968.

Williams, P.R.
Harper, H.P.
Kronholm, H.B.
An Evaluation of an Integrated V/STOL Display Concept. IEEE Transactions on Human Factors in Electronics, HFE-8. 1967. pp. 158-165.

Wolf, J.D.
Cundari, F.
An Experimental Evaluation of Aircraft Displays for IFR Steep Angle Approaches. Paper to IEEE-GMMS-ERS International Symposium on Man-Machine Systems, Cambridge, England. September 1969.

Wolf, J.D.
Hoppe, R.B.
Aircraft Displays for Steep Angle Approaches. Honeywell Inc., Minneapolis. JANAIR Report 681215. 1970.

Wooding, H.C.
Simpson, J.A.
Harper, H.
[illegible], R.
Integrated [illegible] Display Research. United Aircraft Corporation, Nor[illegible], Conn. JANAIR Report 680611. 1970.

Young, L.R.
Integrated Display Principles and some Applications to V/STOL Aircraft. NATO Advisory Group for Aerospace Research and Development. Paper to Conference on Guidance and Control Displays. Paris. October 1971.

NATIONAL DISTRIBUTION CENTRES FOR UNCLASSIFIED AGARD PUBLICATIONS

Unclassified AGARD publications are distributed to NATO Member Nations through the unclassified National Distribution Centres listed below.

BELGIUM
Colonel R. DALLEUR
Coordinateur AGARD – V.S.L.
Etat-Major Forces Aériennes
Caserne Prince Baudouin
Place Dailly, Bruxelles 3

CANADA
Director of Scientific Information Services
Defence Research Board
Department of National Defence – 'A' Building
Ottawa, Ontario

DENMARK
Danish Defence Research Board
Østerbrogades Kaserne
Copenhagen Ø

FRANCE
O.N.E.R.A. (Direction)
29, Avenue de la Division Leclerc
92, Châtillon-sous-Bagneux

GERMANY
Zentralstelle für Luftfahrtdokumentation
und Information
Maria-Theresia Str. 21
8 München 27
Attn: Dr rer. nat. C. von CONSBRUCH

GREECE
Hellenic Armed Forces Command
D Branch, Athens

ICELAND
Director of Aviation
c/o Flugrad
Reykjavik

ITALY
Aeronautica Militare
Ufficio del Delegato Nazionale all'AGARD
3, Piazzale Adenauer
Roma/EUR

LUXEMBOURG
Obtainable through BELGIUM

NETHERLANDS
Netherlands Delegation to AGARD
National Aerospace Laboratory, NLR
Attn: Mr A.H.GEUDEKER
P.O. Box 126
Delft

NORWAY
Norwegian Defence Research Establishment
Main Library, c/o Mr P.L.EKERN
P.O. Box 25
N-2007 Kjeller

PORTUGAL
Direccao do Servico de Material
da Forca Aerea
Rua de Escola Politecnica 42
Lisboa
Attn of AGARD National Delegate

TURKEY
Turkish General Staff (ARGE)
Ankara

UNITED KINGDOM
Defence Research Information Centre
Station Square House
St. Mary Cray
Orpington, Kent BR5 3RE

UNITED STATES
National Aeronautics and Space Administration (NASA)
Langley Field, Virginia 23365
Attn: Report Distribution and Storage Unit

* * *

If copies of the original publication are not available at these centres, the following may be purchased from:

Microfiche or Photocopy
National Technical
Information Service (NTIS)
5285 Port Royal Road
Springfield
Virginia 22151, USA

Microfiche
ESRO/ELDO Space
Documentation Service
European Space
Research Organization
114, Avenue Charles de Gaulle
92, Neuilly-sur-Seine, France

Microfiche
Technology Reports
Centre (DTI)
Station Square House
St. Mary Cray
Orpington, Kent BR5 3RE
England

The request for microfiche or photocopy of an AGARD document should include the AGARD serial number, title, author or editor, and publication date. Requests to NTIS should include the NASA accession report number.

Full bibliographical references and abstracts of the newly issued AGARD publications are given in the following bi-monthly abstract journals with indexes:

Scientific and Technical Aerospace Reports (STAR)
published by NASA,
Scientific and Technical Information Facility,
P.O. Box 33, College Park,
Maryland 20740, USA

United States Government Research and Development Report Index (USGDRI), published by the Clearinghouse for Federal Scientific and Technical Information, Springfield, Virginia 22151, USA

Printed by Technical Editing and Reproduction Ltd
Harford House, 7-9 Charlotte St, London, W1P 1HD