AD 746630

AD

USAAMRDL TECHNICAL REPORT 72-27

U. S. ARMY AIRCRAFT IN-FLIGHT FIRE DETECTION AND AUTOMATIC SUPPRESSION SYSTEMS

By

Matthew deRouville

Roger B. Jones

July 1972

DDC
AUG 14 1972
D

EUSTIS DIRECTORATE
U. S. ARMY AIR MOBILITY RESEARCH AND DEVELOPMENT LABORATORY
FORT EUSTIS, VIRGINIA

CONTRACT DAAJ02-70-C-0056

WALTER KIDDE & COMPANY, INC.

BELLEVILLE, NEW JERSEY

Approved for public release; distribution unlimited.

Reproduced by
NATIONAL TECHNICAL INFORMATION SERVICE
U S Department of Commerce
Springfield VA 22151

107

DISCLAIMERS

The findings in this report are not to be construed as an official Department of the Army position unless so designated by other authorized documents.

When Government drawings, specifications, or other data are used for any purpose other than in connection with a definitely related Government procurement operation, the United States Government thereby incurs no responsibility nor any obligation whatsoever; and the fact that the Government may have formulated, furnished, or in any way supplied the said drawings, specifications, or other data is not to be regarded by implication or otherwise as in any manner licensing the holder or any other person or corporation, or conveying any rights or permission, to manufacture, use, or sell any patented invention that may in any way be related thereto.

Trade names cited in this report do not constitute an official endorsement or approval of the use of such commercial hardware or software.

DISPOSITION INSTRUCTIONS

Destroy this report when no longer needed. Do not return it to the originator.

ACCESSION for
NTIS
DDC
BY
DISTRIBUTION/AVAILABILITY CODES
Dist.
A

UNCLASSIFIED
Security Classification

DOCUMENT CONTROL DATA - R & D

(Security classification of title, body of abstract and indexing annotation must be entered when the overall report is classified)

1. ORIGINATING ACTIVITY *(Corporate author)* Walter Kidde & Company, Inc. 675 Main Street Belleville, New Jersey	2a. REPORT SECURITY CLASSIFICATION UNCLASSIFIED 2b. GROUP

3. REPORT TITLE

U. S. ARMY AIRCRAFT IN-FLIGHT FIRE DETECTION AND AUTOMATIC SUPPRESSION SYSTEMS

4. DESCRIPTIVE NOTES *(Type of report and inclusive dates)*

Final Report

5. AUTHOR(S) *(First name, middle initial, last name)*

Matthew deRouville
Roger B. Jones

6. REPORT DATE July 1972	7a. TOTAL NO. OF PAGES 103	7b. NO. OF REFS 30
8a. CONTRACT OR GRANT NO. DAAJ02-70-C-0056 b. PROJECT NO. 1F162205A529 c. d.	9a. ORIGINATOR'S REPORT NUMBER(S) USAAMRDL Technical Report 72-27 9b. OTHER REPORT NO(S) *(Any other numbers that may be assigned this report)*	

10. DISTRIBUTION STATEMENT

Approved for public release; distribution unlimited.

11. SUPPLEMENTARY NOTES	12. SPONSORING MILITARY ACTIVITY Eustis Directorate U. S. Army Air Mobility R&D Laboratory Fort Eustis, Virginia

13. ABSTRACT

In-flight fire reports at U.S. Army Materiel System Analysis Agency (combat) and U.S. Army Agency for Aviation Safety (noncombat) for UH-1, AH-1 and CH-47 helicopters were studied to determine the cause and location of helicopter compartment fires. Two Army helicopter operating bases were visited for firsthand information. The in-flight fires were divided into groups, and from the number of incidents in each group, a priority was established to secure the most effective results toward development of automatic suppression systems.

A survey was made of fire detectors and methods of extinguishment and suppression, and the characteristics of such systems were evaluated for possible use in the fire suppression systems. System concepts were developed and methods of detection and extinguishment/suppression were selected as most suited for integration into the aircraft system. Design criteria for the various concepts were developed and recommendations made as to systems to be used in the test phase. Simulations of engine, oil cooler, and electronics compartments were fabricated, and selected systems were tested.

The test program successfully demonstrated the feasibility and performance characteristics of the detection and automatic suppression systems used.

DD FORM 1 NOV 65 1473 REPLACES DD FORM 1473, 1 JAN 64, WHICH IS OBSOLETE FOR ARMY USE.

UNCLASSIFIED
Security Classification

UNCLASSIFIED
Security Classification

14. KEY WORDS	LINK A ROLE	LINK A WT	LINK B ROLE	LINK B WT	LINK C ROLE	LINK C WT
In-flight Fire Detection and Automatic Suppression Systems						
Helicopter Compartment Fires						
Fire Detectors						
Fire Extinguishers						
Automatic Fire Detection and Suppression System						

UNCLASSIFIED
Security Classification

DEPARTMENT OF THE ARMY
U. S. ARMY AIR MOBILITY RESEARCH & DEVELOPMENT LABORATORY
EUSTIS DIRECTORATE
FORT EUSTIS, VIRGINIA 23604

This report was prepared by Walter Kidde & Company, Inc., under the terms of Contract DAAJ02-70-C-0056. The technical monitor for this program was Mr. H. W. Holland of the Safety and Survivability Division.

The purpose of this effort was to demonstrate the feasibility of developing an in-flight fire detection and automatic suppression system applicable to typical U.S. Army aircraft. Reports of U.S. Army aircraft in-flight fire were analyzed to determine the areas of the aircraft where in-flight fires occur more frequently. After study of the various methods of detection, suppression, and extinguishment, a breadboard system was designed, fabricated, and tested to demonstrate the effectiveness of the system.

The conclusions and recommendations contained in this report are concurred in by this Directorate. Further research and development will be continued in this area to optimize fire detection and automatic suppression systems for Army aircraft.

Details of illustrations in
this document may be better
studied on microfiche

Project 1F162205A529
Contract DAAJ02-70-C-0056
USAAMRDL Technical Report 72-27
July 1972

U.S. ARMY AIRCRAFT IN-FLIGHT FIRE DETECTION AND AUTOMATIC SUPPRESSION SYSTEMS

Final Report

By

MATTHEW deROUVILLE
ROGER B. JONES

Prepared by

Walter Kidde & Company, Inc.
Belleville, New Jersey

for

EUSTIS DIRECTORATE
U.S. ARMY AIR MOBILITY RESEARCH AND DEVELOPMENT LABORATORY
FORT EUSTIS, VIRGINIA

Approved for public release;
distribution unlimited.

SUMMARY

This report covers a program leading to the successful demonstration of in-flight fire detection and automatic suppression systems in simulated helicopter compartments.

The in-flight fire reports at U.S. Army Materiel System Analysis Agency (combat) and U.S. Army Agency for Aviation Safety (noncombat) for UH-1, AH-1 and CH-47 helicopters were studied to determine the cause and location of such fires. Two Army helicopter operating bases were visited for firsthand information. The manufacturers of the aircraft, Bell and Boeing-Vertol, were visited, and the aircraft construction was studied for correlation with the incident reports.

The in-flight fires were divided into groups, and from the number of incidents in each group, a priority was established to secure the most effective results from effort expended toward development of automatic suppression systems.

A survey was made of fire detectors and methods of extinguishment and suppression, and the characteristics of such systems were evaluated for possible use in the fire suppression systems.

System concepts were developed and methods of detection and extinguishment/suppression were selected as most suited for integration into the aircraft system.

Design criteria for the various concepts were developed and recommendations made as to systems to be used in the test phase. Simulations of engine, oil cooler, and electronics compartments were fabricated, and selected systems were tested.

The test program successfully demonstrated the feasibility and performance characteristics of the detection and automatic suppression systems used.

TABLE OF CONTENTS

	Page
SUMMARY	iii
LIST OF ILLUSTRATIONS	viii
LIST OF TABLES	xi
INVESTIGATION OF IN-FLIGHT FIRE INCIDENTS	1
SURVEY OF FIRE DETECTORS	6
Methods of Detection	6
Flame Radiation Sensing (Optical) Detectors	7
Smoke Detectors	8
Thermal Detectors, Spot Type	9
Thermal, Continuous Fire Detectors	10
Combustible Vapor Detector	14
Explosion Suppression Systems	15
SURVEY OF METHODS OF CONTAINMENT, EXTINGUISHMENT AND SUPPRESSION	16
Extinguishing Agents	16
Inerting	19
Methods of Extinguishant Storage and Application	22
Available Extinguishers	24
DEVELOPMENT OF SYSTEM CONCEPTS AND SELECTION OF METHODS OF SUPPRESSION	26
Engine Fires	26
Oil Cooler Compartment Fires (UH-1)	28
Electrical Fires	28
Battery Fires	29
Forward Electrical Compartment Fires	29
Aft Pylon Fires (CH-47)	30
Aft Cabin Fires (CH-47)	30
Fuel Cell Fires	31
Armament and Payload (Cargo) Fires	32

TABLE OF CONTENTS (Cont)

	Page
AUTOMATIC DETECTION AND SUPPRESSION SYSTEMS REQUIREMENTS	33
Design Criteria	34
Continuous Fire Detector (Thermal)	34
Radiation Sensing (Flame) Detectors	34
Smoke Detectors	34
Fire Suppression Systems	35
Detector Extinguisher Interface Unit Design Criteria	35
SYSTEM APPROACH	36
SYSTEM DESIGNS	40
Automatic Fire Detection and Suppression System - Engine Space.	41
Automatic Fire Detection and Suppression System - Engine Space.	44
Automatic Fire Detection and Suppression System - Engine Space.	44
Automatic Fire Detection and Suppression System - Engine Space.	47
Automatic Fire Detection and Suppression System - Engine Space.	47
Automatic Fire Detection and Suppression System - Engine Space.	50
Automatic Fire Detection and Suppression System - Engine Space.	50
Automatic Fire Detection and Suppression System - Engine Space.	53
Automatic Fire Detection and Suppression System - Oil Cooler Compartment	53
Alternate	56
Alternates	58
Automatic Fire Detection and Suppression System	58
Alternate	61
Automatic Fire Detection and Suppression System - Spaces Surrounding Fuel Cells	63
Fuel Cell - Automatic Explosion Suppression System	63
Alternate	65
TEST PROGRAM	66
Bench Tests of Detector	66
Engine Compartment	67
Extinguishing Configuration	67
Gas Concentration Tests	67
Detecting System Configurations	69
Engine Compartment Test Fires	74
Oil Cooler Compartment	82
Electronic Compartment	86

TABLE OF CONTENTS (Cont)

	Page
CONCLUSIONS	88
RECOMMENDATIONS	89
LITERATURE CITED	90
SELECTED BIBLIOGRAPHY	91
DISTRIBUTION	94

LIST OF ILLUSTRATIONS

Figure		Page
1	Automatic Fire Detection and Suppression Two-Space Main and Reserve Extinguishing System	42
2	Automatic Fire Detection and Suppression System, Engine Space - Single Thermal Detector, Single Extinguisher	43
3	Automatic Fire Detection and Suppression System, Engine Space - Single Thermal Detector, Main and Reserve Extinguishers	45
4	Automatic Fire Detection and Suppression System, Engine Space - Single Optical Detector, Single Extinguisher	46
5	Automatic Fire Detection and Suppression System, Engine Space - Single Optical Detectors, Main and Reserve Extinguishers	48
6	Automatic Fire Detection and Suppression System, Engine Space - Dual Thermal Detectors, Self-Interrogating, Single Extinguisher	49
7	Automatic Fire Detection and Suppression System, Engine Space - Dual Thermal Detectors, Self-Interrogating, Main and Reserve Extinguishers	51
8	Automatic Fire Detection and Suppression System, Engine Space - Dual Optical Detectors, Self-Interrogating, Single Extinguisher	52
9	Automatic Fire Detection and Suppression System, Engine Space - Dual Optical Detectors, Self-Interrogating, Main and Reserve Extinguishers	54
10	Automatic Fire Detection and Suppression System, Oil Cooler Compartment - Single Optical Detector and Extinguisher	55

LIST OF ILLUSTRATIONS (Cont)

Figure		Page
11	Automatic Fire Detection and Suppression System, Oil Cooler Compartment - Dual Optical Detectors, Self-Interrogating, Single Extinguisher	57
12	Automatic Fire Detection and Suppression System, Oil Cooler Compartment - Single Optical Detector, Main and Reserve Extinguishers	59
13	Automatic Fire Detection and Suppression System, Oil Cooler Compartment - Dual Optical Detectors, Self-Interrogating, Main and Reserve Extinguishers	60
14	Automatic Fire Detection and Suppression Electrical Equipment Space Smoke Detector and Power Shutoff	61
15	Automatic Fire Detection and Suppression Electrical Equipment Space Smoke Detector, Power Shutoff and Extinguisher	62
16	Automatic Fire Detection and Suppression Spaces Surrounding Fuel Cells - Thermal Detector, Extinguisher	64
17	Automatic Fire Detection and Suppression Fuel Cell Explosion Suppression System	64
18	Automatic Explosion Suppression (Inerting) System - Helicopter Fuel Cells	65
19	Engine Compartment Mockup	68
20	Location of Sampling Tubes in Compartment	70
21	Agent Concentration Plot - Zero Airflow	71
22	Agent Concentration Plot - 10 mph Airflow	72
23	Agent Concentration Plot - 80 mph Airflow	73

LIST OF ILLUSTRATIONS (Cont)

Figure		Page
24	Fire Detector	75
25	Oil Cooler Compartment - External View	84
26	Oil Cooler Compartment - Internal View	85
27	Electronic Compartment	87

LIST OF TABLES

Table		Page
I	In-Flight Fire Cause and Location Summary	5
II	Comparison of Extinguishing Means	25
III	Cost and Weight Summary	40
IV	Engine Fire Test Summary	77
V	Timed Sequence of Events (Engine Compartment)	83

INVESTIGATION OF IN-FLIGHT FIRE INCIDENTS

The initial approach in this investigation was to study records of past and recent incidents to determine what fires have occurred and the location and cause of the fires. Both combat and noncombat incidents were studied.

A visit was made to AMSAA, where combat records are kept, to examine published reports on the UH-1, AH-1 and CH-47. These reports contain an edited summary of each incident. Certain incidents were selected from the report and the original records were examined. In each case, all technical information had been included in the incident summary report. Accordingly, all further information on combat incidents was extracted from the summary reports. A total of 58 incidents were studied, of which 55 were in-flight fires.

A visit was made to USAAAVS at Fort Rucker to examine noncombat incident records. Of the some 121 incidents listed for the period January 1967 through August 1970, 97 reports were examined, and of these, only 70 were truly of in-flight fires; the rest were crashes and accidents of various kinds where fire occurred but was not a factor in causing the accident or in the survivability of the aircraft or crew.

Visits were then scheduled to the manufacturers of the aircraft, Bell and Boeing-Vertol. Visits were made to the Army helicopter operating base at Hunter Army Air Field for firsthand discussions with operating crews. No useful information was gained on in-flight fires.

During the visits to Bell and Boeing-Vertol, the aircraft were examined in detail. At Bell, the UH-1 construction was examined in relation to the incident reports. The locations of such equipment as batteries, electrical and radio equipment, oil coolers, heaters, generators, and gearboxes that figured in the fire incidents were noted, along with their relation to combustibles, ignition sources and possible methods of fire detection and suppression.

The facts resulting from the record studies and the visits as applied to the UH-1 are as follows:

1. There were a rather large number of battery fires. These start as overheated batteries as a result, probably, of overcharging caused by failure of the charging regulator. They can be prevented by disconnecting the battery when the temperature starts to rise (or the charging rate becomes excessive). A "burning" battery can be extinguished by first, disconnecting it, and second, cooling it. The battery might have ignited combustibles in the area, which will require extinguishment.

2. There were a large number of electrical fires. The first step to extinguishment is to remove electrical power, but the electrical equipment is contained in several compartments both fore and aft, and there is no way to determine which circuit breaker covers a particular compartment. So if a detector signal should indicate fire in a particular compartment, all the crew could do at present would be to pull all electrical circuit breakers and operate the aircraft without electrical power.

3. Many fires involved fuel spillage in the engine compartment. Examination of the engine compartment revealed that no drains are provided. Further, drain guides are provided on the deck of the compartment to funnel spilled combustibles to the place where a drain was apparently intended, but a drain in that location would be of little use because most severe fuel leaks would spray fuel outside of the drain guides, and the guides would effectively block the flow of spilled fuel to the drain. Older ships, as well as new ships, did not contain drains. Severe fires from leaking fuel lines may have been avoided if overboard drains had been provided. Certainly, the severity of the fires would have been much less. The UH-1 later examined at AEL, Farmingdale, N.J., did have drains.

The examination of the CH-47 at Boeing-Vertol revealed a veritable maze of fuel and hydraulic lines and components in the aft end of the cabin and in the aft pylon, with a rather high probability of fire resulting from a hit by enemy fire in this area. However, Boeing-Vertol has already designed an automatic fire suppression system for the aft pylon.

Automatic fire suppression in the cabin would probably not be acceptable because of personnel carried in the cabin. Since the crew chief is stationed in the aft cabin during flight, provision of suitable shutoff valves to limit combustible leakage would be most desirable, followed by provision of portable fire extinguishers to extinguish any fires that occur in the cabin area.

Fuel leaking from the fuel cells, particularly due to hits from enemy fire, poses a severe threat and appeared to be responsible for many of the combat in-flight fires. However, the fuel cells of the UH-1, AH-1 and CH-47 aircraft are being replaced with .50 caliber self-sealing crash-resistant cells which should minimize that fire hazard.

A serious problem in the CH-47 is that oil can leak from the nose gearbox in the engine and run down the shaft housing into the aft pylon. The nose gearbox fails from excessive heat buildup, which can very easily result in a fire which would

then follow the oil down into the pylon. The engine fire detector does not cover th rea, and the engine fire extinguisher does not reach it either. The proposed aft pylon fire suppression system would not cover such fires because the source is outside the pylon. Some sort of barrier is required to contain such fires and prevent their propagation into the aft pylon.

In the UH-1, several instances of in-flight explosions were noted, apparently due to enemy fire striking the fuel cells. Reports (1) (2) on the flammability of fuel cell vapors were reviewed, and it appears that flammable conditions may exist in the fuel cells. This is due to the extension of the flammable range caused by vibration. With ignition in the spray pattern, the sea level highly flammable range may extend from -60°F to +65°F for wide cut fuels and from 45°F to 180°F for aviation kerosenes.

Summary of Incidents and Aircraft Analysis

The in-flight fire incidents have been classified as to cause or location of the fire, and are summarized in Table I for the UH-1, AH-1 and CH-47. They indicate both combat and noncombat incidents.

Of the 87 in-flight fire incidents in the UH-1,

40 involved fires which started in the engine compartment, of which 21 accompanied engine failure

20 were electrical fires including the battery

11 involved the fuel cells, all combat suffered

The number of incidents for the AH-1 are too few to be of great signi' cance, but of 11 incidents, 5 occurred in the engine compartment.

In the CH-47, five of eight of the noncombat fires were in the engine compartment. Of the combat incidents, 12 of 16 fires were in the aft cabin and pylon. Electrical or battery fires do not seem to be a problem in this aircraft (only one incident).

It thus appears that the greatest effectiveness will be achieved if the following priority is observed in instituting suppression means.

1. Engine fires
2. Electrical fires
3. Fuel cell fires

4. Aft cabin (CH-47) fires
5. Battery fires
6. Oil cooler compartment

The armament carried by helicopters presents a special problem. Several incidents were reported in which rockets burned in their tubes, flares and smoke grenades lit off in the cabin, and a weapon accidentally discharged in the cabin igniting rockets and ammunition. In several other cases, the payload carried by the aircraft was responsible for the in-flight fire. Dangerous cargo should never be carried aboard an aircraft without special precautions for an emergency. The special precautions could be the carrying of special tools or equipment. However, for these general cargo aircraft, this is more a matter of operating procedures than it is aircraft design.

TABLE I. IN-FLIGHT FIRE CAUSE AND LOCATION SUMMARY

	UH-1		AH-1		CH-47		
	C*	N/C	C	N/C	C	N/C	Total
Engine failure and fire	-	21	-	4	-	1	26
Engine fire, without engine failure	10	8	-	1	2	4	25
Oil cooler compartment	-	1	-	-	-	-	1
Electrical fires, cabin	-	5	-	-	-	-	5
Electrical fires, elec. compartment	2	6	-	2	-	1	11
Electrical fires, engine	-	1	-	-	-	-	1
Fuel cell fires (Internal)	3	-	-	-	-	-	3
Fuel cell fires (External)	8	-	1	-	1	-	10
Battery	-	6	-	-	-	-	6
Aft Cabin (CH-47)	-	-	-	-	7	-	7
Aft Pylon (CH-47)	-	-	-	-	2	1	3
Transmission	1	-	-	-	2	-	3
Armament (External)	4	-	1	-	-	-	5
Payload/Cargo (Internal)	1	6	-	1	1	1	10
Unknown and Miscellaneous	4	-	1	-	1	-	6
	33	54	3	8	16	8	122
	87		11		24		
Fires resulting from major aircraft damage but not a factor in the ensuing crash	3	14	1	2	-	4	24
TOTAL INCIDENTS	104		14		28		146

C = Combat
N/C = Noncombat

SURVEY OF FIRE DETECTORS

Recognized manufacturers of fire detectors were surveyed to determine if their devices could be used on helicopters. Smoke detectors, combustible vapor detectors, and explosion suppression equipment, as well as flame detectors and thermal type fire detectors, were considered.

METHODS OF DETECTION

The properties of a fire are:

1. The presence of flame
2. The release of heat
3. The release of products of combustion

Flame can be detected in two general ways:

1. Sense the electromagnetic radiation of the flame. This radiation occurs across the full light spectrum from ultraviolet to infrared; the intensity at various wavelengths varies with the composition of the fuel.

2. Sense the ionized gas path created by the presence of flame (or burning gases) between electrodes.

The effects of fire can also be used for detection:

1. The thermal effect - the temperature rise imparted to the burning gases or the surrounding atmosphere can be sensed by thermal detectors, the hot gases usually reaching the detector by convection.

2. The products of combustion - which may be particulate products, such as smoke, or may be gaseous products, such as CO_2.

Many principles can be used to sense the varying properties or characteristics of fire and flame; over the years many devices have been developed and used with varying degress of success. Technical deficiencies and high costs have reduced the fire detection devices for aircraft use to a relatively few. This discussion will be limited to devices currently available and service proven.

Flame Radiation Sensing (Optical) Detectors

Flame detectors are covered by Military Specifications MIL-F-23447 (WEP) and MIL-D-27729A (USAF) and FAA TSO-C79. All establish sensitivity in terms of response to a standard test fire, JP-4 burning in a 5-inch pan at a distance of 4 feet from the detector. MIL-D-27729A requires response to the standard fire in 0.15 second maximum, while the others allow up to 5 seconds.

Flame detector. This device has two photocells, each sensitive to a different wavelength, one in the visible blue-green region and the other in the near infrared region. Hydrocarbon flames emit a preponderance of their energy in the red and yellow region.

Viewing a flame, the device has its red-sensitive cell activated, and electronic circuitry signals with a relay closure when the cell output reaches a predetermined value representative of a "standard" fire. Sunlight has a high energy output in the blue as well as the red regions. Viewing sunlight, therefore, both the blue and red cells would be activated, but the output of the blue cell is arranged electrically to suppress the output of the red sensitive cell due to the sunlight. Should a fire be in the field of view and the sunlight not too strong, the red cell output can be sufficient to energize the signal circuit.

The two-color approach eliminates the false warning problem of previous photocell detectors caused by extraneous sunlight, and recent models are also able to avoid false response from the predominantly red light of the setting or rising sun.

It is still a high impedance device (the photocells exhibit resistance in the meg-ohm region), and so extreme precautions must be taken against moisture shunting the cell. The high impedance also makes it necessary to take precautions against voltages induced by nearby power wires.

Red aircraft beacon lights will produce a false fire signal from the device, and so precautions should be taken to shield the detector from such light.

Coverage of the hazard area requires a direct line of sight to the possible flame since the intensity of reflected light is so low. The detector cell is relatively insensitive to oil and dust films, but some regular maintenance is necessary to keep the lens reasonably clean.

The detector cells cannot withstand ambient temperatures above about 300°F. However, the housing for the detector cells is a sufficient heat sink for the cells

that the detector is able to withstand a 2000°F flame for 3 minutes, and thus should be able to survive for the time it would normally take to detect and extinguish a fire.

The major advantage of this device is its speed of response to fire. At a distance of 10 feet from the standard fire, it responds within 1 second.

Such a detector cannot normally respond to a magnesium flame because of the color ratio. However, the device is capable of holding in on a magnesium fire if first activated by a normal hydrocarbon fire.

Installation generally is arranged so that cones of vision of each detector overlap to the extent that any given area is viewed by two detectors. Up to six detectors can be used with a single control unit (the control unit houses the electronic circuitry).

Ultraviolet radiation detector. Hydrocarbon fires emit considerable radiation in the ultraviolet region, and a detector employing ultraviolet radiation of the proper wavelength would be insensitive to visible light or to sunlight (ultraviolet below 2900 Angstrom is mostly absorbed by the earth's atmosphere, and is not present in appreciable intensity below 10,000 feet altitude). Thus, such a device should be free of false warnings from extraneous light. Ultraviolet sensing devices are generally Gieger-Muller tubes in which photon energy causes emission of electrons from the cathode which ionizes the gas in the tube and results in an avalanche current. The avalanche can be triggered by cosmic radiation. Such tubes also self-trigger in random fashion. In detector design, the avalanche is generated in regular cycles, with avalanching required in several consecutive cycles to establish a fire warning. This delays the response to between 2 and 3 seconds to a standard flame.

Smoke Detectors

Smoke detection devices are divided into two major classes: those which rely on the obscuration or reflection of a light beam by the smoke, and those which employ an ionization chamber.

The detectors available for aircraft use employ a light beam and operate on the reflection of the light beam by the smoke particles.

Ionization chamber. The ionization chamber detectors sense the presence of smoke in air as it passes between electrically charged plates where the air is ionized bv alpha radiation from a nuclear source. Clean air produces a given

current flow due to the ionization. The presence of smoke particles reduces the flow of the ions between the plates and is thus detectable as a current change.

Smoke detector. This detector employs a light beam and photocell in a light-tight chamber. Smoke introduced into the chamber reflects the light beam onto the photocell and signals an alarm. The reflected light principle gives fail-safe operation - in the event of lamp failure, the device fails to operate, and no false signal is given (earlier obscuration-type devices caused a false alarm in the event of lamp failure). The smoke can be introduced to the detector either by natural convection currents or by forced draft. In the latter method, a system of tubes and blowers would be required.

Thermal Detectors, Spot Type

A number of such devices are available and operate on a variety of principles; they include resistance bulb thermometers, thermistor probes, thermocouples, and bimetallic switches. In actual practice, resistance bulb thermometers are used for actual temperature indication at various locations in aircraft - oil temperature, bleed air temperature, exhaust gas temperature, and the like. Apparently because of the simplicity (only a switch closure for alarm is needed), only bimetallic switches are used for spot fire detectors, and they are the only devices approved under the various Military and FAA specifications for thermal spot fire detectors.

One type of thermal spot detector consists of a sealed tube in which two low-expansion struts carry two electrical contacts. When the tube expands longitudinally due to heat, the struts are lengthened, straightening the bow and bringing the contacts together. When the tube cools, the struts resume their original bowed position with contacts apart. This simple device is in quite common use. Because it is a mechanical device, it is subject to malfunction, and must therefore be heated periodically to test its functioning. Electrical connections to the detector can be tested by a simple continuity test.

All spot detectors are limited in detecting fires. Since they can only sense the temperature of the spot in which they are located, their location must be chosen to insure that in the event of fire, they will be in the path of the hot gases. Because of the stratification and unpredictability of airflow, a rather large number of spot detectors should be employed to be sure one is in the right place for any possible fire.

For this reason, the continuous detector was developed and has virtually supplanted spot detectors as fire detectors in aircraft engine compartments.

Thermal, Continuous Fire Detectors

The continuous fire detector is a long capillary tube filled with temperature sensitive material, and is capable of sensing a temperature change anywhere along its length. The capillary can be strung about the hazard area and across airflow patterns, so that it is highly unlikely that a fire could exist and not have the resulting hot gases intercept some portion of the continuous detector. Most continuous detectors are electrical in nature, so electrical connectors are provided at each end of the capillary, making a "sensing element", as it is generally called. Sensing elements may be connected together to make strings 100 feet in length or more, although generally, systems require less than 50 feet of sensing element. The elements are generally connected in a loop, with each end of the string connected to the control unit, which monitors the thermal responsive electrical property of the sensing element. With such a loop connection, the element string can be severed, but since the ends are still connected to the control, it will still be able to sense temperature.

The continuous detector is covered by Military Specification MIL-F-7872C and FAA TSO-C11d which establishes aircraft environmental conditions and minimum response sensitivity. Although not required by specifications, additional reliability is obtained by using redundant loops of sensing elements and controls, connecting the two loops in either "AND" or "OR" logic depending on the desire of the aircraft manufacturer for the presentation of the fire warning to the crew. Redundant loops, each meeting the specification requirements for a fire detector also permit dispatch of the aircraft if one loop should be faulty on preflight test.

Continuous fire detector, thermistor type. In this detector, the capillary is filled with a thermistor material in which are embedded the electrical conductors. The thermistor, having a negative temperature coefficient, reduces the electrical resistance between the conductors when it is heated, rising again when cooled. The control unit monitors the resistance, signalling the alarm when the resistance drops to the preset value corresponding to the predetermined alarm temperature. Since the element is essentially an infinite number of thermistors in parallel, the resistance of the system is a function of the length of element heated as well as its temperature, the result being a non-arithmetic average temperature indication, weighted to the high temperature areas.

A simple continuity test is sufficient for testing the integrity of the detector loop, since there is no mechanical actuation or electrical deterioration. A functional test of the control unit is accomplished by simulating fire conditions with a fixed resistance across the element.

The reliability of the thermistor-type continuous detector is well established by its long and favorable service.

Maintenance requirements of the continuous detector are related to the installation. In modern installations, the detector element is located with regard to minimizing the damage it may sustain from maintenance operations. In most aircraft, when properly installed, maintenance action for the detector is virtually nil.

A system which senses resistance and signals an alarm when the resistance drops below a preset value is subject not only to failure, but to giving a false warning if the detector element becomes shorted. The detector uses a discriminator circuit which prevents a false warning in the event of a short, converting the false warning mode of failure to an inoperative failure.

A novel way of preventing moisture which may finds its way into element connectors or into the element itself from shorting the element and causing a false warning or inoperative system is done by operating the detector element at a DC voltage too low to overcome the polarization potential of salt water, so that conduction is very low and consequently salt water would appear as a high resistance.

The continuous detector is installed by attaching the detector element at close intervals (6 inches - 9 inches) to aircraft structure, or directly to the engine, routed in the general paths of airflow and adjacent to sources of combustible leakage.

In many cases, the detector element is attached to the compartment fire wall to indicate the presence of excessive heat at that fire barrier. The control unit is located outside the fire zone. The detector element connector can be used to penetrate the fire wall, but where this is not practicable, fire zone wire is used for electrical connections to the element. Care must be taken in the routing of the element and its connecting wires to prevent chafing which could result in short circuits and a resulting inoperative system. In many modern installations, special support structure is provided for the detector elements, and in some cases, the elements are shrouded for protection.

The fire detector specifications, both Military and civil, require that the detector respond in less than 5 seconds when 6 inches of length is immersed in a 2000°F flame. In an actual aircraft fire, response may be anywhere from 1 second to 10 seconds depending on the intensity of the fire, but a good approximation for an active fire when the element is in the path of the hot gases is about 3-1/2 seconds.

Detector elements are available in diameters of .045 and .065 inch in addition to the .090 inch diameter standard. These smaller elements would give faster response (40% and 60% of the standard response time), but at a sacrifice in

ruggedness. The smaller elements, therefore, should be used only when the installation would permit the lesser degree of ruggedness.

This thermistor type detector meets the requirements of MIL-F-7872C and FAA TSO-C11d and is therefore suitable for aircraft use.

Continuous detector, eutectic salt type. In this device, the capillary is filled with a porous insulator surrounding the conductor, impregnated with a eutectic salt that melts at the desired alarm temperature. When the salt melts, it conducts and acts as a low resistance path - it effectively acts as a switch, changing from a very high to a very low resistance over a very narrow temperature range of approximately 20°F. An AC potential must be used to operate the detector element, since DC causes metallic plating out on the insulator and permanent shorting of the detector.

Because of the sharp switching action of the melting salt, the detector operates at a discrete temperature, virtually unaffected by the length of element heated. Thus, this is a fixed temperature device, essentially nonaveraging.

The diameter of the capillary is approximately .090 inch, but its length is restricted to 15 feet maximum for individual elements. Elements can be strung together to form a practically unlimited total length.

As with the thermistor-type continuous detector, a simple continuity test is adequate to test the integrity of the device, since, again, there is no mechanical actuation.

Since the control monitors the resistance, and signals a low resistance, a short circuit results in a false alarm. Because the rate of resistance change of the melting salt approaches that of a short circuit, discrimination between heat and short circuits is difficult to obtain, and consequently a short discriminator circuit becomes quite complex and discrimination may be unreliable. With redundant detector loops, short discrimination is provided inherently, and discrimination circuits become less necessary.

With AC applied voltages, moisture in element connectors will appear as a low resistance, but the detector is able to operate at a very low resistance level (20 ohms) and so avoid false warnings. However, atmospheric moisture entering a breach in the capillary will dissolve the salt, and the dissolved salt will conduct and give a false warning.

The time response of this type detector appears faster than the response of a similar size thermistor element because the short length in the flame test need not be heated as high as the averaging thermistor element. In actual installations,

however, there would be little difference in response to a fire because a longer length of element would be heated by the fire and the overall ambient would also rise; these conditions do not affect the response of the eutectic element, but do speed the thermistor response.

This type detector is in service in many civil and Military aircraft, and conforms to MIL-F-7872A and FAA TSO-C11d.

Continuous fire detector, capacitance type. This device is similar in construction to the thermistor types, and in fact contains a thermistor, but the characteristic monitored is the capacitance of the detector element. The capacitance has a positive coefficient - it rises with temperature. The capacitance effect is employed by applying a DC voltage to the element at intervals and sensing between application intervals to see if the charge is retained. The magnitude of the retained charge is a measure of the capacitance. The alarm point is set at the magnitude corresponding to the desired temperature.

Since the detector is essentially an infinite number of capacitances in parallel, it too indicates an average temperature; but since the capacitances average arithmetically, the temperature average is less heavily weighted to the high temperature areas.

Since the monitoring circuit is not measuring a reduction in resistance, a short circuit does not cause a false warning. A short does render the detector inoperative.

The thermistor resistance also tends to short the capacitance at high temperatures where the resistance is low, and while means are taken to overcome the problem in the design of the electrical circuit, the detector does have the possibility of not responding to very rapid heating where the element resistance suppresses the capacitance. This is a serious factor, however, only in such fires as torch-like burn-throughs, or very hot fires formed in the presence of high airflow.

Continuous fire detector, pneumatic type. In this device, the capillary is filled with a solid material which outgasses heavily when heated above a critical dissociation temperature. A void space is maintained between the outgassing material and the capillary wall by a spiral wrap of metal. Thus, when outgassing occurs, a pressure buildup is transmitted down the capillary to a pressure switch at one end, which in turn signals the alarm. This outgassing occurs at a discrete temperature which depends on the dissociation temperature of the outgassing material, and is of such volume as to be independent of the length of element heated. However, the gas in the void space expands as the element temperature increases (below the dissociation temperature) and generates a pressure which actuates the pressure switch. This pressure is

dependent on the volume of gas heated, and thus directly on the length of element heated. It provides a temperature indication that is an arithmetic average of the element temperatures. This arithmetic average makes it insensitive to short lengths heated and so depends either on the discrete outgassing temperature for a fire alarm, or on a rather extensive general heating of the compartment.

The outgassing material is a selected metal hydride, which dissociates into the metal and hydrogen. Upon cooling the detector after outgassing has occurred, the hydrogen recombines with the metal, reforming the hydride.

If a small leak occurs in the capillary, the averaging function may not operate, but the hydride formation is voluminous enough to overpower all but a massive leak. With a leak, enough hydrogen may be lost to prevent reformation of the hydride on cooling, so that the detector may not operate a second or third time. A further problem is that a dent in the capillary may block or restrict the flow of gas so as to slow, or even prevent, response.

A simple continuity test of the capillary is not sufficient to establish integrity and proper functioning. Heating of the remote end of the detector would be required to establish proof of the proper functioning of the hydride dissociation, but heating of a longer length to a temperature below the hydride dissociation would be required to establish integrity of the averaging function.

Although currently in use in some Military and civil aircraft, systems of this type do not provide for an adequate integrity test as described above. A previously-used integrity test heated the entire element length electrically, but checked only the averaging mode of operation. It did not test the high temperature hydride dissociation mode, nor did it assure a clear gas passage in the element. Further, heating a sensing element in an aircraft to the alarm temperature as a preflight requirement is not only awkward, but is potentially dangerous because the temperatures required are likely to be above the spontaneous ignition temperature (S.I.T.) of fuel and lubricants.

For this reason, this detector will not be further considered for helicopter use.

Combustible Vapor Detector

Combustible vapors are commonly detected by burning the vapors on the surface of a heated catalyst filament where the oxidation increased the filament temperature. The increase in temperature is measured to sense the combustion. Propagation of the combustion backward to the source of the vapor is prevented by a flame arrestor screen. Such detectors are in common use in industry and the marine field, but none have been adapted for aircraft use. However, if the need

existed, adaptation would be a relatively simple matter, the major design problem being in "ruggedizing" the catalyst filament.

Explosion Suppression Systems

Explosions start relatively slowly and may be stopped if extinguishant is applied to the growing flame front quickly enough - generally 15 or 20 milliseconds. Systems designed to do this use fast-acting flame detectors or pressure detectors which sense the starting explosion and automatically trigger the explosively dispersed extinguishant which quenches the flame.

Such a system is manufactured which uses a sensitive, fast-acting infrared sensing flame detector for the detection unit which is installed in the compartment to be protected. The detector must be protected from ambient or stray light, or false actuation will result. The extinguishing agent, liquid or dry chemical, is contained in a metal cylinder or sphere scored to split open upon actuation of an explosive charge contained inside. The opening is designed to disperse the agent evenly in a 360° pattern.

This system could be considered for use in fuel cells, but because of the number and size of the fuel cells in the UH-1, its expense and weight (a separate system would be required for each cell) would probably eliminate it in favor of other methods of preventing explosions.

SURVEY OF METHODS OF CONTAINMENT, EXTINGUISHMENT AND SUPPRESSION

Fire extinguishment is the interruption of burning by the application of an agent which interferes with the process of combustion.

Fire containment is the physical restriction to the spread of fires by enclosing the hazard area in fireproof or fire-resistant barriers, isolating the fire from vulnerable areas. The contained fire may be extinguished, or if the supply of oxygen or fuel is sufficiently restricted, it may be permitted to burn itself out.

Inerting is the creation of an inert atmosphere around the fire hazard so that oxygen is excluded and fire cannot start. This is generally applied to areas such as fuel cells where a combustible atmosphere may exist ready to be ignited explosively by a stray ignition source such as lightning, static discharge, or an incendiary round. Inerting would be applicable to any compartment where combustible vapors exist. Since no compartment is normally sealed, maintenance of an inert atmosphere requires a constant supply of inert gas, complicated by the breathing of the compartment or tank as altitude changes. Explosion suppression is different from inerting because it allows the explosion to start, senses the start, and rapidly quenches the forming explosion with extinguishing agent.

As used in this report, fire suppression is an active method by which fire is prevented from starting or is extinguished. Many references include the detection of fire as part of the suppression process.

EXTINGUISHING AGENTS

There are three primary ways to extinguish a fire:

1. Cooling as with water.
2. Smothering (exclusion of oxygen) as with carbon dioxide.
3. Chemical interference with the flame front as with the Halons.

Most agents employed may act in more than one mode; the cooling effect of water is assisted by the smothering effect of the steam generated, and the smothering effect of the CO_2 is assisted by a degree of cooling from its vaporization.

There are three basic classes of fires:

A. Carbonaceous material - wood, paper, cloth, etc.
B. Hydrocarbon material - oil, grease, fuel.
C. Electrical - insulation, etc., burning in presence of electrical energy.

Water. Water is the most effective agent against Class A fires. It has also been used effectively against Class B fires. Additives are required to depress the freezing point, and generally they are either flammable or corrosive, thus severely limiting the use of water for on-board aircraft use.

"Light Water" or Aqueous Film Forming Foam (AFFF). This is a foam with an expansion ratio of 8-10 to 1, using 1 gallon of concentrate to 16 gallons of water.

The basic mechanism is that of isolating fuel from the flame with a film of foam. It is highly effective against Class B fires when the pool is relatively still, but is not suitable for aircraft applications.

AFFF is primarily used in mobile ground units, where it is often applied in combination with dry chemical in a twin or combined unit. The two agents complement each other in that the powder knocks down the fire while the foam surface prevents reflash. Its primary aircraft-related function is in crash extinguishing equipment.

Protein Foam. Protein foam is a mechanically generated low expansion foam employing concentrate and water. This agent is no more applicable to the hazards of this study than the more effective AFFF.

High Expansion Foam. This agent is applicable primarily to large spaces. The agent consists of detergent foam having expansion ratios up to 1000 to 1. This foam has been used very effectively against both Class A and B fires. The foam consists of tiny bubbles blown from a screen wet with a detergent water solution by a high volume airflow. Because of the bulk of the foam generator, this type of equipment is not considered applicable to helicopter use.

Dry Chemical. Originally used only in portable extinguishers, these very effective agents are now also used in a large number of industrial and commercial built-in systems. Three types of powder are in current use:

> Regular powder is primarily sodium bicarbonate and may be used effectively against Class B and C fires. It is the least expensive of the dry chemical agents, and is also more dense, permitting more powder to be provided in the same container.
>
> Purple K has a potassium bicarbonate base. It is more effective than the regular or ABC on Class B fires, but is not as effective on other classes. It is considerably more expensive.
>
> ABC powder is so named because of its relatively good performance against fires of all three classes. It is therefore widely used in portable equipment to combat fires of any type.

Powder is normally distributed by a pressurizing medium, either dry air or nitrogen, which may be stored in the same container as the powder or introduced into the powder container from a separate source.

Powder does not provide as good three-dimensional properties as the vaporizing liquid agents. When one considers discharging into a relatively rough space where it would be desired to get the agent around and behind flame holders, such as ribs or accessories, the liquid agent would have an advantage.

There is also a severe problem in clean-up with the dry chemical agents. In a aircraft this could be detrimental, since the powder is slightly abrasive, has insulating properties on electrical contacts, and in the presence of moisture is corrosive to aluminum components.

Carbon Dioxide. Carbon dioxide is one of the pioneer agents. It extinguishes by smothering (oxygen dilution) and cooling. It is stored in high pressure containers as a liquefied gas. At room temperature, its vapor pressure is 850 psi. This rises to 3200 psi at 160°F with the most commonly used filling density of 68% (weight of CO_2 equivalent to 68% of the weight of water which could be placed in a given container), necessitating a high pressure, relatively heavy container. The carbon dioxide is normally discharged under its own vapor pressure. However, for low temperature operation the CO_2 charge may be supplemented with nitrogen and/or Halon. Care must be used in the design of valves and fittings for CO_2 to prevent voids into which CO_2 can expand, allowing "snow" to form and pack. Although inexpensive, this agent cannot compare with the effectiveness of either dry chemical or the liquid agents on a pound-for-pound basis. Low pressure carbon dioxide, long used in industrial systems, is cryogenically stored and is only efficient in systems using relatively high quantities of agent. It will not be considered further here.

Nitrogen. Nitrogen, stored as a cryogenic liquid, has been advanced recently as a candidate agent for aircraft fire extinguishing. Its effectiveness would be comparable to CO_2 since it employs the same mechanism. The agent must be stored in a Dewar to maintain its liquid state. It is only considered here on the basis that, if liquid nitrogen is present in large quantities as would be required for fuel tank inerting, it might also be used for fire extinguishing. Preliminary FAA tests have indicated the nitrogen requirement to be four times that of Halon 1301 (by weight) for identical extinguishing situations in aircraft engines.[3]

The Halons. This group of halogenated hydrocarbons exhibits superior extinguishing capability, which is explained on the basis of their chemical interference with the combustion process at the flame front. These agents are commonly referred to as liquid agents, even though most are in the vapor state at room temperature and atmospheric pressure, because they are stored under pressure as a liquid.

Methyl Bromide (MB), Chlorobromomethane (CB) and Dibromodifluoromethane (CF_2Br_2) have been used in the past but are not now being considered for new applications. Halon 1301, Bromotrifluoromethane (CF_3Br), is used in this country, and Halon 1211, Bromochlorodifluoromethane (BCF), is used in Europe as the most popular agent of this type for aircraft fire extinguishing systems. A third agent of this type, Halon 2402, Bromochlorotetrafluoroethane (CF_2Br-CF_2Br), is also being used. Halon 2402 is currently used in explosively dispersed explosion suppression systems on some commercial aircraft. Because of its high boiling point (117.5°F) it is normally in a liquid state and does not lend itself to effective distribution when discharged through standard aircraft high rate discharge systems with open end tubing. Its effectiveness could be greatly increased with spray nozzle or multiorifice discharge, or through the use of a pyrotechnic charge to heat and vaporize it for discharge. Its primary advantage in these nonpressurized explosively dispersed applications is in the lower vapor pressure of this agent, thereby permitting lighter weight storage vessels.

Magnesium Fire Agents. Magnesium fires are a special class which require the use of special agents for extinguishment. Graphite powder and sodium chloride are two widely used basic agents, marketed under trade names with additives for free flow, etc. Both of these are smothering agents, selected because they do not react with the burning magnesium. They must be heaped on and around the part to be extinguished. The agents can be applied from units similar to the familiar portable dry chemical extinguisher.

A third agent suitable for use on magnesium, but not yet marketed, is tricresyl phosphate. This liquid quenches the violently burning magnesium, but results in lazy secondary fires which may then be extinguished with CO_2, dry chemical or Halon. The tricresyl phosphate may be applied from a standard pressurized water-type extinguisher.

INERTING

Inerting is considered for prevention of fires and explosions in confined spaces where combustible vapors may exist, and is particularly considered here for fuel cells. Inerting can be accomplished by passive or active means.

Passive means for inerting fuel cells are actually means for containing an explosion by dividing the cell into small spaces separated by some means of flame arresting. Any explosion that occurs does so in only a small volume of the cell, while the explosive force or pressure rise is distributed throughout the entire cell. Thus, the pressure never becomes large enough to rupture the cell.

Fuel cells may be actively inerted by continuously providing a nonflammable atmosphere. This can be accomplished in various ways, one of which is by

introducing an inert gas in the vapor space in sufficient volume to reduce the oxygen content to below that required for combustion. It may also be accomplished by the mechanical creation of fuel fog in the vapor space of the fuel cell, thus keeping the atmosphere overrich and nonflammable.

Of the passive inerting materials, reticulated polyurethane foam appears to hold the most promise. Most of the test work and service testing has been done with a reticulated polyurethane foam with approximately 1/10-inch pore size. This material is relatively light, is one of the most fuel-resistant elastomers known, and has reasonably high strength.

Reticulated foam is believed to suppress the combustion process by the removal of energy by the absorption of heat and by mechanical interference.

The use of this foam has been extensively tested by the Air Force and has been found practical and effective. The primary drawbacks are cost, weight and reduction of available fuel. The material itself weighs 0.24 lb/gallon of tankage, but since it also displaces 2.5% of fuel in the tank, the net weight increase of a full tank is about 0.06 to 0.08 lb/gallon of tankage. Of course, the full tank now holds 2.5% less fuel, and there is an additional 1.0% of fuel which is retained in the tank.

Relief from this weight penalty has been sought, and programs are under way with 1.36 lb/cubic foot material having 15 to 20 pores/inch, and with 25 ppi foams.

Coupled with these programs are explorations in the area of voiding techniques. The technique of voiding breaks down into two categories, the basic difference being in the size of the void.

One is coring, which refers to either cubical or cylindrical void spaces with strict limitation as to size - 4 to 6 inch cubical and 2 to 3 inch diameter, 8 inch long cylindrical voids. Gross voiding, the other technique, refers to larger individual voids ranging from 3% to as high as 17% of the total tankage.

"Compartmenting" is a further development of gross voids advanced by McDonnell-Douglas Corporation. It divides a large tank into interconnected compartments, limiting the size of baffle openings between them to 10-30% of the total baffle area, with foam on each side. The advantage of this technique is that overall voiding percentages as high as 80 can theoretically be accomplished with the use of 25 ppi foams.

"Compartmenting" may be limited to new applications, since the installation requires special hardware for compartmenting the tank and special techniques for attaching the foam to the tank interior. Because of this, the use of

uncomplicated "gross voiding" appears to be the most promising technique for reducing weight on retrofit programs.

The voiding principle utilizes the flame-arresting characteristics of the foam to prevent propagation of the flame throughout the tank when ignition occurs in a voided area. Pressure and temperature rise are relieved through the surrounding foam into the entire tank volume, thus maintaining an overall pressure rise within the capability of the system.

Perforated hollow plastic spheres were unsuccessful as a passive arresting technique due to low effectiveness and excessive weight. [4]

Emulsions and gels created by chemically thickening fuels have received considerable attention. These controlled flammability fuels (CFF) hold promise of minimizing fires from crash or spill situations by reducing fuel spread.

The effect of the CFF on internal tank protection is questionable since the thickened fuel could still produce a stoichiometric mixture which could be ignited explosively by an incendiary round or other ignition source in the vapor space. [4]

Inerting using gaseous nitrogen has a long history. Experimental systems were tried on B-50, B-36 and B-52 aircraft. A production system was installed on the B-57, and the B-70 and SR-71 also employed nitrogen inerting systems.

More recently, with advances in cryogenic storage of liquefied gases it has been demonstrated that liquid nitrogen can be provided for this function at a considerable saving in weight over the storage of nitrogen in high pressure cylinders.

A regulator senses pressure on both sides of the vent valve and introduces vaporized nitrogen as required to maintain a positive internal pressure in a tank which has previously been purged of oxygen to below the flammability level. The system must be responsive to altitude changes, and systems under current consideration supply a small amount of nitrogen during cruise to replace fuel being consumed. A greater amount is applied during descent to maintain a positive pressure as the atmospheric pressure increases. Dissolved oxygen is removed from the fuel through the use of a proprietary refueling process and by bubbling nitrogen through scrub nozzles located in each baffled section of the fuel tank.

The short duration of the mission cycle with these rotary-wing vehicles might make possible a very simplified constant bleed system using gaseous N_2.

Carbon dioxide and Halons are not considered suitable inerting gases because of their high solubility in fuel.

The concept of providing fuel tank purge gas from the inert gaseous products of combustion has been considered in the past. From the simple use of flame arrestors and water separators to allow use of a reciprocating engine exhaust gas to current programs employing catalytic burner techniques, all are too complex for use on Army helicopters.

Another approach is to maintain a rich tank ullage by using some of the liquid fuel itself in the form of a fog. The finely divided fuel (fog) acts as if it were in the vapor state, adding to the natural fuel vapor concentration. With the tank ullage maintained above the flammable limits, the fuel air mixture would not ignite.

The system would be made up of a distribution manifold with fog nozzles located to produce a uniform fog distribution throughout the tank under the full range of ullage and dynamic flight conditions.

To date, this system has fallen short of the 100% effectiveness due to coalescing of fuel particles allowing the ullage to return to within the flammability range. [4]

METHODS OF EXTINGUISHANT STORAGE AND APPLICATION

Two types of built-in systems are in current use. The conventional engine fire extinguishing system conducts the agent to the protected space from a remotely mounted container. The capsule type container mounts in the protected space and distributes agent by controlled rupture of the container or of a closure disc.

For use in the conventional system, the Halon 1301 stands out for its effectiveness, low toxicity, and ready availability. It is used in current systems by the Army, Navy, Air Force and in civil aircraft. The agent is normally contained in a spherical container, since a sphere represents the lighter envelope for any given volume. The room temperature presure of 200 psi of the agent is supplemented by pressurizing with nitrogen to 600 psi, the added pressure is necessary to assure adequate discharge at low temperature, since Halon 1301 has a vapor pressure of only 2.91 psi at -65°F.

The agent container is normally mounted outside the protected space but as close to it as practicable. The release mechanism is normally an electrically initiated pyrotechnically operated valve, capable of rapid operation and high flow. The agent is carried by tubing and discharged into the fire zone.

In engine systems, a high rate discharge system is normally employed. These systems are designed to discharge the required amount of agent in 0.5 to 0.9 second. This type of system is prescribed in Specification MIL-E-22285, "Extinguishing System, Fire, Aircraft, High-Rate-Discharge Type, Installation

and Test of." This specification evolved from extensive testing conducted by the CAA Technical Development and Evaluation Center at Indianapolis, and reported in Technical Development Report No. 260.

Since it is not practical to test the system against actual fires, the acceptance of the system is based on measurement of agent concentration in the protected space during a discharge. A calibrated gas analyzer, sensitive to the agent, continuously withdraws samples of the contents of the space with up to 12 probes placed to provide complete coverage of the space. The output of this device is monitored and recorded against time, providing a permanent record of the test. The acceptance criterion for a Halon 1301 engine system is that a concentration of 6% by volume be maintained throughout the space for 0.5 second at normal cruise conditions.

In order to provide these concentrations, empirical factors have been developed which, when applied to space volume and airflow, dictate the quantity of agent necessary. This quantity when properly distributed will meet the concentration requirement.

As an alternate, the capsule container normally associated with explosion suppression has merit. If it is acceptable to mount the extinguisher in the fire zone, the use of these proven devices with their absence of plumbing and rapid response should be considered.

These containers are charged with Halon 2402 and contain an internal explosive charge. The container itself, or a large closure disc, is normally scored to control the rupture so as to assure an omnidirectional distribution pattern. In use, the explosive charge is electrically initiated, rupturing the disc or capsule and dispersing the agent throughout the protected space.

Halon 2402 is used rather than 1301 because of its lesser variation of vapor pressure with temperature for comparable charging density. For a container that must be ruptured by internal pressure, it is desirable that a constant internal pyrotechnic charge produce similar results at the temperature extremes.

The trade-off results in the use of an agent higher in toxicity (of little importance in unmanned space) and lesser effectiveness which can be compensated for by increased quantity.

Since this type of device is mounted in the fire zone, a rapid response is required from the detector to prevent possible damage to the container by fire, which might prevent effective discharge of the agent.

AVAILABLE EXTINGUISHERS

Halon 1301 HRD

Military Specification MIL-C-22284, "Container, Aircraft Fire Extinguishing System, Bromotrifluoromethane, CF_3Br" details requirements for a type of aircraft fire extinguisher employing Bromotrifluoromethane (Halon 1301) as the agent and nitrogen to 600 psi as the pressurant. Several sizes of spherical containers ranging in charge from 2.5 lb to 30 lb of agent with both single and dual outlets are provided. All these units are rechargeable at moderate cost. The containers are designed to discharge 90% of their contents within 0.8 second, the discharge time being controlled by orifice size. The outlet sizes are proportioned to agent charge, ranging in size from 5/8-inch to 1-3/4-inch tube size. This type of container is in wide use in both Military and civil aircraft, and a wide selection would be available for the test program.

Explosion Capsule

The explosion suppression capsules (reservoirs) in current use consist of cylindrical containers charged with Halon 2402, Dibromotetrafluoroethane. The agent is dispersed through a mesh screen upon rupture of a scored disc closing one end when internal pressure is increased by the firing of an internal explosive charge.

Two sizes are in current use, a 20 cc (0.88 lb of agent) unit in the fuel vent surge tank protection system of the Boeing 747 aircraft, and a 1400 cc (6.2 lb of agent) used in the F-105. The agent release in these devices is almost instantaneous, occurring in milliseconds. These units are not repairable, and after actuation must be removed and replaced.

Comparison of Extinguishers

The MIL-C-22284 type is recommended for application in most helicopter automatic detection and suppression systems. The exception would be in internal fuel tank explosion suppression.

Table II gives a comparison of extinguishing means.

TABLE II. COMPARISON OF EXTINGUISHING MEANS

	HRD Extinguisher	Explosion Capsule
Agent	CF_3Br	CF_2Br-CF_2Br
Agent quantity	2.5 lb, 6.5 lb, 11 lb	0.83 lb, 6.2 lb
Cost each (approx. 100 pcs)	$195, $220, $280	$245, $265
Weight - lb	5.29, 10.75, 19.0	2.25, 10.5
Rechargeable	yes	no
Possible connection for discharge indication	yes	no
Size	5.72, 7.75, 9.30 dia (spheres)	4.5 dia x 13.5 long 2.18 dia x 7-in long

The MIL-C-22284 containers offer sizes compatible with the requirements, while several 0.88-lb explosion capsules would be used for an intermediate agent quantity. The costs favor the container, and rechargeability is an advantage as is the provision for an indication of discharge. The weight is close to a standoff, but the container offers a system refinement for later consideration in that it can be provided with dual outlets allowing one container to protect either of two compartments.

DEVELOPMENT OF SYSTEM CONCEPTS AND SELECTION OF METHODS OF SUPPRESSION

ENGINE FIRES

Fire extinguishing in engine compartments is commonplace in multiengine aircraft, and the methods used are well established and effective. Fire detection in engine spaces has also achieved a high level of reliability, but the two have not been combined in an automatic fire suppression system which involves automatic engine shutdown.

An engine fire is generally caused by leaking fuel or oil being ignited by some hot surface. To extinguish such a fire, it is necessary only to discharge sufficient extinguishant into the compartment. However, unless some steps are taken to stop the leakage of combustibles, to eliminate the source of ignition, or to maintain the extinguishant atmosphere, the fire will likely restrike when the extinguishant dissipates.

Stopping the flow of fuel leakage requires that fuel be shut off, which means shutting down the engine. For this to occur automatically would probably be unacceptable to aircraft operators. The alternative is to allow the engine to continue to operate, and fuel to flow, but to maintain the extinguishant atmosphere by closing off the engine compartment ventilation. While the engine temperature would rise, operation at reduced power could limit the temperature rise to an acceptable level and enable continued operation of the aircraft until suitable preparations for landing could be made. Closing engine ventilation can be accomplished automatically, along with automatic discharge of extinguishant, but flight control of the aircraft is left in the hands of the flight crew. This arrangement is used for the Army's Cheyenne helicopter, and seems far more acceptable than automatically shutting down an engine in flight, particularly if it is a single-engine aircraft, as the UH-1.

Ordinarily, for detection of an order of reliability adequate to prevent false actuation of an automatic system, when crew judgement and observation cannot be exercised, redundant detectors connected so as to require activation of both for actuation of the automatic system should be used. However, a failure of either of the redundant systems would prevent automatic actuation and would require a crew action upon receipt of signal from only one, thus losing the valuable speed of response of the automatic system. If the redundant systems are connected so that activation of either will actuate the automatic system, the ultimate for speed of actuation response is achieved, but at the expense of halving reliability against false actuation.

A redundant system would therefore be considered, in which activation of both is normally required for actuation of the automatic system. Upon a signal from only one, automatic action is taken to determine the status of the nonsignalling system and, depending on its integrity, actuate the automatic suppression system or not. Such an arrangement is being used with the continuous detector in the F-15.

However, with the present high level of reliability exhibited by modern secure installations of continuous detectors, either a single detector or redundant detectors connected for either to activate the suppression system should be considered.

Optical detectors, which operate on the light emitted by flame, are inherently faster than thermal detectors, but the speed of response of either the optical or of the well-placed continuous detector (1 second vs 2 seconds) to a normal active fire is adequate, and reliability, both for detection and against false actuations, is the overriding consideration. Coupled with this reliability is the need (and perhaps lack) of maintenance. The thermal spot detector will not be considered because it requires periodic maintenance checks, has less thorough coverage than the continuous detector, and has no advantages over the optical detector.

For extinguishment in the engine system, the agent recognized as being the most effective for such fires, Halon 1301 or Bromotrifluoromethane (CF_3Br) should be used. A standard lightweight container (probably spherical for maximum weight efficiency) and an explosive-actuated valve should be used. The agent is supercharged with nitrogen to 600 psi to supplement the agent's vapor pressure at low temperatures. Such an arrangement is standard in the industry today.

The ventilation shutoff would require a new design for the cowl panel in which the ventilation louvers would be replaced by openings capable of being closed. If the ventilation system were redesigned for airflow in a positive direction, it would facilitate the placement of thermal fire detectors.

Suppression of fire in the engine compartment, as well as its prevention, or at least reduction of severity, should be considered.

We recommend that drains be installed on the UH-1 on a retrofit basis as well as in new aircraft, as soon as possible, independent of any other fire precaution measures. Separation of the hot section of the engine from the fuel sections by a firewall would help to prevent fires by separating combustibles from ignition sources, and combined with drains, could prevent some fires and delay the occurrence of others.

OIL COOLER COMPARTMENT FIRES (UH-1)

This space had one severe fire caused by fuel leaking from the engine compartment. This should be eliminated as a future possibility by the installation of drains in the engine compartment. However, the oil cooler compartment is still a hazard because it contains a combustible in the oil cooler, and has ignition sources in the form of a battery and bleed air heat exchanger. While only one other fire was recorded in this area, the hazard to the aircraft integrity is sufficient to warrant consideration.

A separate detection system for this area, probably a smoke detector should be considered, since heavy smoke is anticipated prior to actual ignition of oil. An automatic oil shutoff would be required, possibly a bypass valve to permit oil flow to continue but to bypass the cooler. A secondary detector should be of the thermal variety, placed to sense a threat to the tail boom integrity, which would automatically discharge the engine fire extinguisher, through a separate valve, into the oil cooler compartment. It is anticipated that the smoke detector would warn prior to the actual outbreak of fire and permit corrective action by the crew. Operation of the oil bypass valve could be made manual as an alternate to automatic.

An alternate arrangement could be considered, in which the extinguishant is contained in a peel-open container and dispersed by an explosive charge activated by the detector. The container must be installed in the compartment to be protected. Such devices are used in explosion-suppression systems, and provide extremely fast discharge of agent.

ELECTRICAL FIRES

The only effective means of suppressing electrical fires is to first remove the electrical power. Application of extinguishant may then follow, if combustible materials have been ignited. The solution of this problem is complicated in the UH-1 aircraft because there is no present correlation between circuit breakers and the location of the electrical equipment they control.

Electrical fires generally are accompanied by generation of considerable smoke, prior to actual ignition of combustibles. The heat from an electrical fire may be quite small at the onset in proportion to the size of the compartment, making thermal detection on the compartment level difficult. If the electrical fault is contained within a piece of equipment, as it probably would be normally, an optical detector would not be activated. Thus, the choice would be a smoke detector.

For an automatic suppression system, a master shutoff would have to be provided for each compartment to enable power to that compartment to be shut off. A fire extinguisher container could be provided for all the inaccessible electrical compartments, discharging into all of them when a smoke signal is received from one, since the volume of any one compartment is relatively small, and the volume of agent required to inert all spaces would require a lighter system than one of the multivalves to inert compartments singly.

Although each piece of electrical equipment could be provided with its own thermal cutout, and probably should be, this would not take care of those electrical fires that occurred in wiring outside of the equipment.

BATTERY FIRES

Battery fires are actually overheated batteries, which may get hot enough to ignite nearby combustibles. The overheating is actually thermal runaway caused by very rapid charging or overcharging, which in turn is caused by failure of the charging regulator. [5]

The overheating can be stopped only by disconnecting the battery from the charging source. This is best done when overheating or overcharging starts, rather than waiting for a fire to result. Therefore, a thermal detector or thermostat mounted on or in the battery which would automatically disconnect the battery from the charging source should be considered.

Thermal monitoring is fire prevention. In the UH-1, extinguishment of a battery fire would be accomplished by the fire extinguishing means provided for other hazards in the same compartment. For example: the aft battery compartment is also the oil cooler compartment; we have already suggested coverage by the engine fire extinguisher, automatically triggered by a smoke detector in the compartment. This would also cover any fire the battery started.

The forward battery compartment in the UH-1 is part of the forward electrical compartment and is accessible, for fire fighting, from the cockpit; fires should be extinguished in the forward compartment with a portable fire extinguisher operated by the crew.

FORWARD ELECTRICAL COMPARTMENT FIRES

These areas, the "chin" area, are open to the cockpit at the pilot's and copilot's feet. Any electrical fires occurring in these compartments will be detected promptly by the crew through their sense of smell. With identification of circuit breakers protecting equipment in these compartments, the crew can manually

pull the proper breakers. Extinguishing can be accomplished with the cabin portable Halon fire extinguisher by putting the discharge nozzle at the compartment opening at the pilot's or copilot's feet.

If desired, automatic suppression could be used. A smoke detector could sense the fire and would operate an electrical disconnect for the compartment, including the battery, and actuate a small fire extinguisher container. Halon 1301 (CF_3Br) is the most effective extinguishing agent. The quantity would be small, and while the toxic products created by the reaction of the Halon on the fire could enter the cabin, the volume would be too small to be harmful to the crew.

AFT PYLON FIRES (CH-47)

An automatic fire suppression system has already been designed by Boeing-Vertol for this area and submitted to the Army. It consists of three Halon extinguisher containers each covering a compartment in the aft pylon. Each extinguisher is automatically triggered by any one of several overlapping optical detectors.

However, there should be a physical barrier in the tunnel between the engine nose gearbox and the combining transmission to prevent the propagation of fire originating in the nose gearbox into the aft pylon. The engine fire extinguishing and detection systems should be extended to the nose gearbox area.

AFT CABIN FIRES (CH-47)

This area was the scene of many in-flight fires, fed from the complex of fuel and hydraulic fluid lines in the area. This area of the cabin is accessible during flight, and is the station for the crew chief.

Visual fire detection by the cabin occupants would, therefore, be sufficient, and extinguishment of any fire would be best handled manually by the crew with at least two portable fire extinguishers stored nearby. Halon should be used for the extinguishing agent. The use of dry chemical for its "throwing power", and for the protection the cloud of powder gives the operator in shielding him from the heat of the fire, should be considered. However, dry chemical poses a cleanup and corrosion problem, and so its use should be held in reserve.

These cabin fires can be disastrously severe, and so the crew should be furnished with more fire fighting aids than just the extinguishers. First, should be the provision of sufficient shutoff valves, plainly marked for emergency use, to stop the flow of combustibles. And since the valve may be hot from the fire, protective gauntlets should be provided.

The normal ventilation in the CH-47 cabin is from the rear forward. This exposes the occupants of the cabin to the hot gases from a fire in the aft cabin. Fortunately, this ventilation exits through the cargo door just aft of the cockpit, so the flight crew can be isolated. This ventilation should be reversed. If this cannot be done, then a fire curtain to prevent the spread of the fire products forward, together with additional ventilation openings in the cabin walls forward of the fire curtain, should be provided. Cargo stowage would have to allow for deployment of the fire curtain.

FUEL CELL FIRES

Fuel cell fires that occurred in the UH-1 were all caused by hostile fire. The mechanism of the fires seemed to be penetration of the fuel cell by the round, followed by ignition of leaking fuel which burned outside the fuel cell. However, three fuel cell explosions occurred as a result of hits.

Preventing fuel cell explosions, either (1) by using reticulated polyurethane foam, (2) by maintaining an inert atmosphere in the fuel cells, or (3) by providing an automatic explosion suppression system in the fuel cells should be considered. Alternate (1) would probably involve the least weight penalty, particularly if the method is used of dividing the cell with foam into explosion-manageable volumes, rather than filling the entire cell. Alternate (2) would involve carrying a considerable quantity of nitrogen on board, plus the complexity of the system for metering it into the fuel cells as required. It would also involve fitting the fuel cell vents with check valves to prevent in-breathing. Alternate (3) is made complex by the shape and number of fuel cells in the UH-1.

The UH-1 is being fitted with crash-resistant fuel cells that are also self-sealing for .50 caliber hits. Although these fuel cells will have little effect on the possibility of fuel cell explosions, they should materially reduce the occurrence of those fuel cell fires where the fuel burned outside the cell from puncture leaks.

Should the self-sealing of the fuel cells not be 100% effective, however, a fire suppression system should be used for the spaces surrounding the fuel cells. The continuous detector lends itself to installation in the spaces surrounding the fuel cells, and upon actuation by fire, would automatically discharge a fire extinguishant into all the void spaces surrounding the fuel cells. The extinguishant most suitable would be Halon 1301. The discharge system would require outlets in each general void area.

The best container would probably be the usual sphere, superpressurized with nitrogen and fitted with an explosively actuated valve. The discharge system would be a system of tubes conducting the extinguishant to each major void area, where the gaseous agent would rapidly spread into all its subdivisions.

The spaces would remain inert for some prolonged period, so re-ignition by a subsequent hit would be unlikely; therefore, a single-shot extinguishing system would provide adequate protection.

ARMAMENT AND PAYLOAD (CARGO) FIRES

Built-in, automatic fire suppression systems for such fires would not be feasible, unless the aircraft were designed for a particular payload for which a specific system could be designed.

However, some fire precautions are indicated. The jettison mechanism for rockets should be improved to provide positive means of jettisoning when struck and ignited by gunfire, even if the mechanism should be damaged by such gunfire. If the rockets cannot be jettisoned, then the aircraft should be shielded from serious damage from the burning rocket.

A number of incidents have occurred in which payload burned inside the aircraft. Since the crew is present, they can be an effective fire-fighting force if provided with the necessary tools. Some tool should be provided, such as tongs or a shovel, to pick up a burning flare or smoke grenade and dispose of it overboard. Protective clothing may be necessary, particularly gloves and goggles.

An adequate number of portable fire extinguishers should be provided, and they should be placed where they can easily be reached in an emergency. At least two Halon portable for the UH-1 should be provided, plus a dry chemical extinguisher for "emergency" use, the dry chemical having better "throwing" power and providing a protective cloud to the operator.

If any special cargo or armament is taken aboard, special fire protection should be provided in the event of emergency. For example, if a load of magnesium flares is carried, a special portable fire extinguisher containing the special dry chemical agent that will extinguish magnesium fires should be carried. Jettisoning such cargo should be considered first, and the necessary precautions should be taken.

AUTOMATIC DETECTION AND SUPPRESSION SYSTEMS REQUIREMENTS

A Helicopter Fire Detection and Automatic Suppression System shall be designed to sense a fire and react immediately to extinguish the burning. It shall simultaneously initiate action necessary to prevent recurrence.

This preventive action may consist of:

1. Cutting off fuel
2. Removing ignition source
3. Excluding oxygen
    a. Stopping or reducing airflow
    b. Inerting compartments

The system will provide the pilot a warning light indicating that an alarm condition exists. Further indication may be provided that systems functions have been performed. The initial light shall be self-clearing when the fire has been extinguished.

The system must also incorporate a test feature which will, when activated, indicate system integrity.

Particular emphasis must be placed on providing a system which will respond only to fire. It shall not respond to:

Power supply variations including: voltage spikes, frequency shifts, polarity reverses or momentary circuit faults

Moisture
Artificial Light
Sunlight
Electromagnetic Radiation
Circuit Component Failure

The system must maintain its integrity and function properly under and after conditions of load and environment imposed by helicopter service. It must be simple to maintain and not interfere with maintenance of other helicopter components. A Helicopter Fire Detection and Automatic Suppression System will consist of the following components.

1. A fire detecting system of the appropriate type for the space being protected. This shall be selected from the thermal continuous, radiation sensing, or smoke detection types, consistent with existing specifications and with modifications as described in subsequent paragraphs.

2. A fire extinguishing system of the high rate discharge or explosive dispersion type, which is also further detailed in subsequent paragraphs.

3. An appropriate cockpit display to indicate functioning of the system.

4. A system integrity test circuit.

5. A detector-extinguisher interface unit, capable of providing firing current to the extinguisher when activated by the detector output. This unit may also be capable of switching power for other suppression functions as required for a specific installation; to shut off valves, cut off airflow, etc. This device may also integrate the system test and display functions.

DESIGN CRITERIA

Continuous Fire Detector (Thermal)

Continuous detectors shall be designed and installed in accordance with applicable portions of Military Specification MIL-F-7872C, "Fire and Overheat Warning Systems, Continuous, Aircraft, Test and Installation of:"

Radiation Sensing (Flame) Detectors

Radiation sensing detectors shall be designed and installed as required by Military Specification MIL-F-23447, "Fire Warning Systems, Aircraft Radiation Sensing Type: Test and Installation of:" with the following exception:

> Paragraph 3.4.2, Flame Detector Response. Instead of 5 seconds, a response of 2 seconds will be required. (This is within the capability of existing equipment.) Paragraphs 3.4.7 through 3.4.9 dealing in warning lights are waived for use in automatic suppression systems.

Smoke Detectors

Smoke detectors for use in the Helicopter Fire Detectors and Automatic Suppression System shall comply with Military Specification MIL-D-27729A, "Detecting Systems; Flame and Smoke, Aircraft and Aerospace Vehicle, General Performance, Installation and Test of" as applicable to smoke detectors.

Fire Suppression Systems

Fire suppression systems shall be designed to provide agent quantities consistent with Military Specification MIL-E-22285, "Extinguishing System, Fire, Aircraft High Rate Discharge Type, Installation and Test of:" except that in instances where reflash following initial extinguishing is likely, the concentration must be maintained for a longer period.

Applicable portions of MIL-F-25648, "Fire and Explosion Suppression Units, Aircraft Fuel Tank and Tank Cavity, General Specifications for", will be the governing specification for capsule type extinguishers, with the basic exception that the agent will be Dibromotetrafluoroethane (CF_2Br-CF_2Br, Halon 2402). Conventional extinguishing containers will conform to MIL-F-22284A, "Military Specification, Container, Aircraft Fire Extinguishing System, Bromotrifluoromethane CF_3Br (Halon 1301)."

Detector Extinguisher Interface Unit Design Criteria

This device will monitor the detector output (2 amps resistive). Upon receiving a signal indicating that a fire has started, it will provide indication to the pilot and close the circuit (10 amp), causing discharge of the fire extinguisher. Simultaneous with this action, circuits capable of controlling additional functions will be activated. A signal of this sequence will also be available for display.

A means will be provided to establish continuity throughout the circuit such that on command the detector will function, with suitable switching so that the test current through the fire extinguisher cartridge will be limited to 0.5 amp.

If the detector functions and all circuits from the detector to the extinguisher and through the cartridge are continuous, the system test light will illuminate. The test light is not to extinguish if the relay which switches the cartridge to the current-limited source remains in that position after test.

SYSTEM APPROACH

Having arrived at a combination of hardware which can be used in an automatic detection and suppression system, there are a number of system arrangements to be considered.

In the simplest arrangement, a detector output triggers an extinguisher such that presentation of stimulus to the detector results in discharge of the agent.

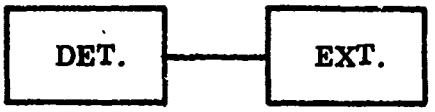

In conventional, manually initiated aircraft extinguishing systems, it is usual to provide a second or reserve "shot" of extinguishant, if for some reason, the first is not effective. The same could be accomplished in a fully automatic system by using a time delay circuit such that if the detector had not cleared within a given time period, the reserve container would be discharged. This could be arranged so that clearing of the fire signal after the first discharge would cancel the time delay so that the reserve shot would be fired immediately upon receipt of a second signal.

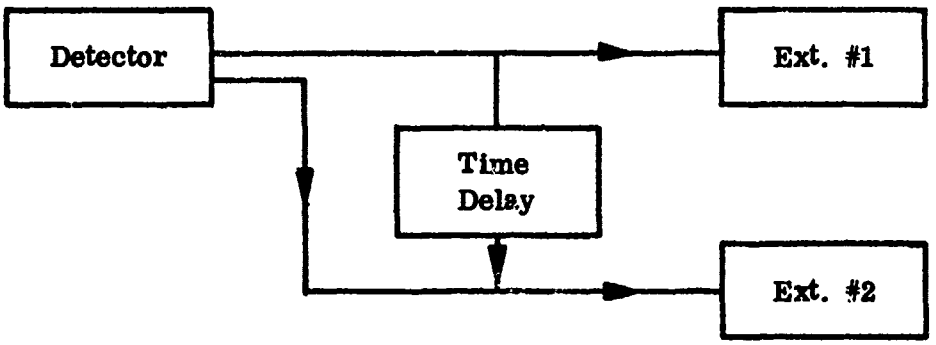

The purpose of an automatically initiated fire suppression system is to gain the time normally lost by manual initiation, since time is critical in helicopter in-flight fires. Reliability of detection becomes important, therefore, to assure that fires are promptly detected and the extinguishing initiated. Redundancy in detectors is commonly used to achieve this reliability, the redundant detectors being arranged in the "either-or" mode, so that either detector may initiate the fire suppression sequence.

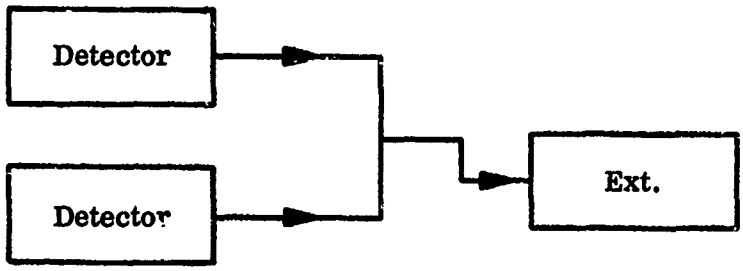

"OR"

Reliability to detect = $2 R_{Det} - R_{Det}^2$ ($> R_{Det.}$)

Reliability against false detection = R_{Det}^2 ($< R_{Det.}$)

However, since the automatic system removes some of the aircraft shutdown procedures from crew control, the possibility of the automatic system triggering inadvertently becomes of concern, and the "OR" arrangement of detectors increases this possibility. From the standpoint of prevention of inadvertent actuation, an "AND" mode of redundant detector operation would be preferable, in which the activation of both detectors would be required to initiate the fire suppression sequence. The advantage of this arrangement would be completely negated in the event of the failure of one detector.

"AND"

Reliability to detect = R_{Det}^2 ($< R_{Det}$)

Reliability against false detection = $2 R_{Det} - R_{Det}^2$ ($> R_{Det}$)

Reliable as detectors have become, the "OR" arrangement is not recommended for an automatic system where flight capability is in any way reduced. And a detector failure in a strictly "AND" arrangement could be calamitous in the event of fire occurrence.

The latest advance in detector system reliability technology which could be extremely valuable in helicopters is the use of dual detectors arranged in the "AND" mode of operation, but where activation of only one detector automatically triggers an interrogation (test) of the other detector. If the other detector is

faulty, the fire suppression sequence is initiated. If, on the other hand, the other detector is operative, the signal from the first is presumed to be false, and the fire suppression sequence is not initiated. Such an arrangement gives the favorable reliabilities of both the AND or OR modes, with a delay in initiation in the event of failure of one detector of less than 20 milliseconds.

Although the automatic self-interrogating system has been applied only to redundant continuous systems, there is no limitation which would prevent its application to other types of sensors, or even to a combination of different types of sensors in a mixed system.

One of the secondary considerations, regardless of system type pursued, is cockpit display. It is recommended that the minimum to be considered is indication to warn the pilot that his automatic system has functioned. This signal could be transmitted when the sensor triggers the signal firing the container. An additional signal could be presented from a pressure switch in the line indicating that the extinguisher had functioned. When the fire light cleared, following this signal, it would indicate a successful extinguishment of a fire.

If automatic systems are incorporated in more than one space, each space should have an indicator since different courses of action might be indicated for the pilot, depending on the space involved. Whereas he might elect to continue to his base after the cutoff of an electronic compartment, he would desire to set down rapidly following engine fire in a single-engine craft.

In considering automatic suppression, cutting the engine of a single-engine craft presents as severe a hazard as fire. It will therefore be necessary to allow continued flow of fuel to the engine and possibly to the fire. We may therefore, following the initial extinction of the fire, continue to present fuel to a source of ignition which has not been removed. It is therefore desirable to maintain the agent concentration in the space as long as possible after first application. This can be accomplished by cutting off airflow or by continually adding agent.

The minimum design concentration for inerting JP-4 as set forth in NFPA Standard on Halogenated Fire Extinguisher Systems is 6.6% by volume. After extinction of the fire, it would be necessary to add .026 lb of agent for each cubic foot of air flowing into the compartment. If we assume a moderate airflow of 1000 cfm and desire to maintain the inert atmosphere for 5 minutes, the required agent weight would be 130 pounds. This quantity of agent would require a storage container of approximately 3000 cubic inches (an 18-inch-diameter sphere) with a container weight of at least 29 pounds.

A system to maintain an inert atmosphere in a compartment having airflow of 1000 cfm would have the following weights:

Agent	130 lb
Container assembly	29 lb
Tubing 30 ft of 1/4 x .012 in.	1 lb
Mounting hardware	5 lb

This weight can be reduced by allowing a shorter period of time for the pilot to get down or by reducing the compartment airflow or by a combination of both.

In view of the high weight penalty of maintaining an inert atmosphere with even moderate airflow, closing the cowl openings as part of the suppression procedure is recommended. There are two sources of compartment airflow, the normal ventilating air and the compressor interstage bleed air.

One reason for the amount of open area in the engine cowl of craft using these small turbines is that the engine at speeds below flight idle or during periods of acceleration unloads by dumping interstage bleed air. Following a suppression action, it is recommended that the engine be operated above flight idle and as much as possible without speed changes.

SYSTEM DESIGNS

The system designs discussed previously are illustrated in Figures 2 through 18 for each of the hazard spaces to be protected. These systems are listed along with estimated cost and weight in Table III.

TABLE III. COST AND WEIGHT SUMMARY

Space	Description	Weight (lb)	Cost ($)
Engine	Single Thermal, Single Ext.	7.33	531
Engine	Single Thermal, Dual Ext.	13.12	786
Engine	Single Optical, Single Ext.	7.29	690
Engine	Single Optical, Dual Ext.	13.08	945
Engine	Dual Thermal, Single Ext.	8.68	978
Engine	Dual Thermal, Dual Ext.	14.47	1,233
Engine	Dual Optical, Single Ext.	8.19	1,115
Engine	Dual Optical, Dual Ext.	13.88	1,390
Oil Cooler	Single Optical, Single Ext.	7.29	690
Oil Cooler	Dual Optical, Single Ext.	8.19	1,135
Oil Cooler	Single Optical, Dual Ext.	13.08	945
Oil Cooler	Dual Optical, Dual Ext.	13.98	1,390
Electronics	Single Smoke, No Ext.	.98	254
Electronics	Single Smoke, Single Ext.	6.64	544
Fuel Cells Area	Single Thermal, Single Ext.	7.33	786
Fuel Cells (5)	Explosion Suppression	15.50	2,550
Fuel Cells (5)	Nitrogen Inerting System		
Fuel Cells	Reticulated Foam, 50% void	23.25	300

The following system designs consider only individual systems, each protecting a single space. Each system design provides a single-shot, or an alternate double-shot (main and reserve), extinguishing system.

It is recognized that the weight of several double-shot systems could be prohibitive. However, any given space can be protected to the same degree of reliability by using a single two-shot system to cover two spaces. Thus, a fire in either space would have the benefit of a main and reserve shot. Only in the event of a fire occurring in each space would a single shot be provided for each. This would be an unlikely occurrence if the spaces to be joined by an extinguisher system avoid the potential of a fire spreading from one to another.

For a two-shot system, a second discharge valve is added to each container, and the containers are arranged as shown in Figure 1. The two-way check valve prevents the agent from the reserve shot entering the previously fired but now empty first-shot container.

The weight increase for such a system is 1.0 lb per container for the additional valve, and .14 lb for each tee, making a total increase of 2.28 lb. This may be compared with the 5.4 lb for the smallest single outlet container.

AUTOMATIC FIRE DETECTION AND SUPPRESSION SYSTEM - ENGINE SPACE (See Figure 2)

Single Thermal Detector, Single Extinguisher

The sensor for this type system consists of continuous sensing elements routed through the engine space in locations where the heat flow, in the event of a fire, impinges on some portion of the elements. The control unit associated with these elements responds to a fire by initiating the fire extinguishing sequence.

The interface unit accepts the detector fire signal and directs the 10-amp firing current to the extinguisher. The extinguisher is a container of Halon 1301 (CF_3Br), pressurized with nitrogen gas to 600 psi to provide a high rate discharge (HRD) in accordance with MIL-C-22284.

Since the fuel flow cannot be shut off without shutting off the engine, the only alternate is to shut off the airflow into the compartment. This is accomplished by redesigning the engine vents so that they may be closed. The detection system, through the interface unit, provides the power to close the vents simultaneously with discharging the extinguisher. With air ventilation stopped or greatly reduced, the extinguishant can maintain an inert atmosphere in the engine compartment and thus prevent the fire restriking.

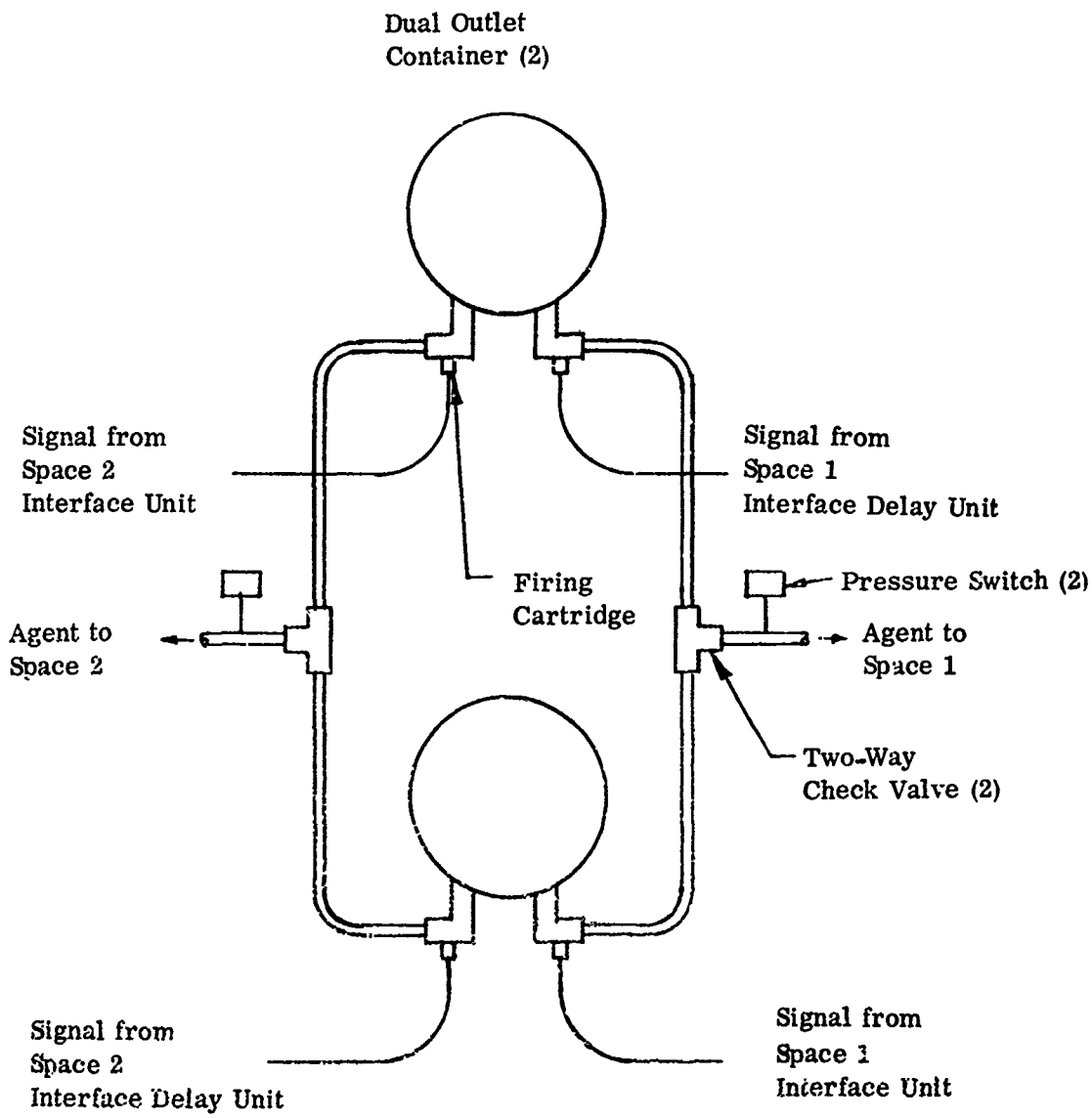

Figure 1. Automatic Fire Detection and Suppression Two-Space Main and Reserve Extinguishing System.

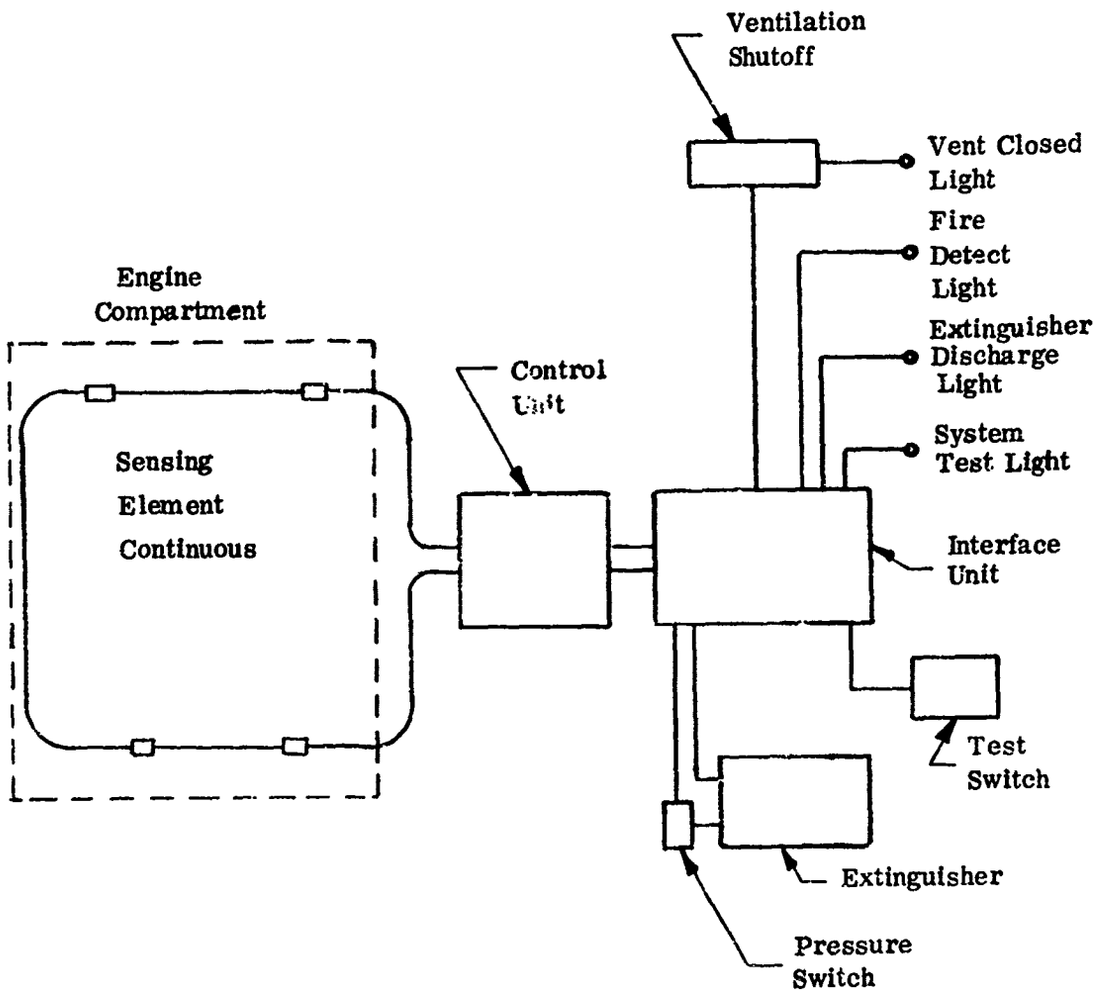

Figure 2. Automatic Fire Detection and Suppression System, Engine Space - Single Thermal Detector, Single Extinguisher.

With ventilation shut off, engine cooling will be impaired, but operating under reduced power, it will be possible to continue flight until a landing spot can be selected.

Indication of the suppression action must be provided to the crew so that they may adjust their flight operations accordingly. A light will be energized by the interface unit to indicate fire detection. Another light will be energized by a pressure switch in the extinguisher outlet line to indicate extinguisher discharge. Another light is provided, operated by the vent itself, to indicate the vent is closed. This latter is valuable to prevent operation of the aircraft with the vents inadvertently closed.

A test switch is provided in the cockpit to test the integrity of the system. Operating the test switch checks the functioning of the sensor control units and the interface unit and the continuity of the wires through the extinguisher discharge cartridge. If the test light illuminates in test, it indicates the system is "go". A transfer relay in the interface unit switches the extinguisher cartridge to a test current source that is limited to 0.5 ampere, well below the cartridge firing threshold. If the transfer relay "hangs up" on test, the test light will not extinguish after test, indicating a system malfunction.

AUTOMATIC FIRE DETECTION AND SUPPRESSION SYSTEM - ENGINE SPACE (See Figure 3)

Single Thermal, Dual Extinguisher

This system is similar to the single system except that this system provides a second or reserve shot of extinguishant. A time delay circuit is connected to the reserve container.

The container firing circuit will fire one bottle immediately. It will also initiate a time delay mechanism, and if the alarm has not cleared within 45 seconds, fire the second container. If the alarm has cleared the second container will not fire at the completion of the delay sequence but will then be ready for immediate discharge upon receipt of a second signal.

AUTOMATIC FIRE DETECTION AND SUPPRESSION SYSTEM - ENGINE SPACE (See Figure 4)

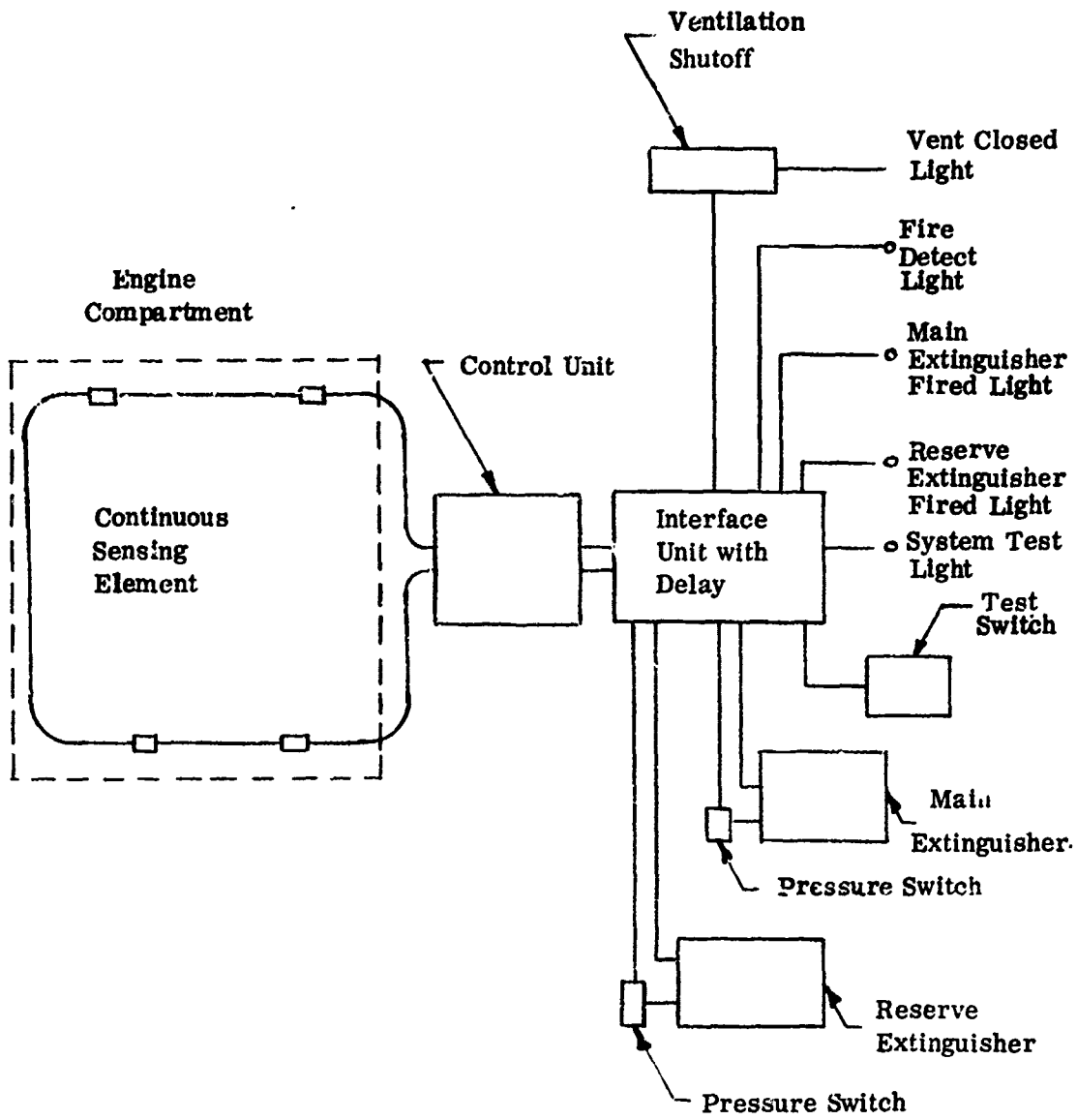

Figure 3. Automatic Fire Detection and Suppression System, Engine Space - Single Thermal Detector, Main and Reserve Extinguishers.

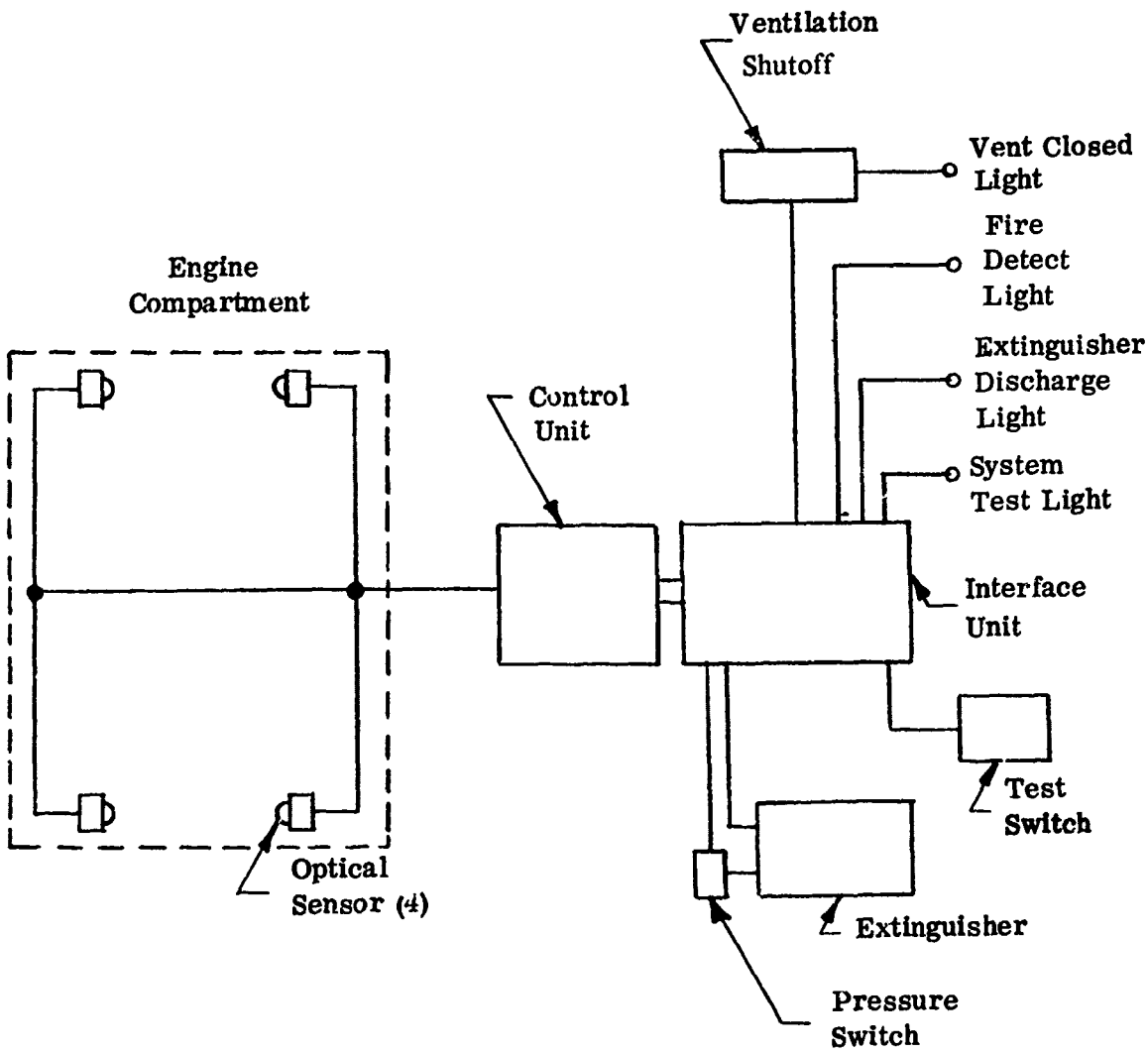

Figure 4. Automatic Fire Detection and Suppression System, Engine Space - Single Optical Detector, Single Extinguisher.

Single Optical Detector, Single Extinguisher

This system employs four optical sensors installed in the engine compartment, mounted near the deck, one in each of the four corners and pointed toward the engine and upward. Thus, any fire occurring in the compartment will be in the view of at least two of the sensors on one side of the engine.

When a fire situation occurs, the detecting system signal triggers the fire extinguishing sequence.

The interface unit also activates the airflow shutoff system, provides necessary indication to the crew, and incorporates system integrity tests.

AUTOMATIC FIRE DETECTION AND SUPPRESSION SYSTEM - ENGINE SPACE (See Figure 5)

Single Optical, Dual Extinguisher

This system adds a second or reserve shot of extinguishant to the single optical, single extinguisher system. A time delay circuit is employed to the reserve container.

The container firing circuit will fire one bottle immediately. It will also initiate a time delay mechanism, and if the alarm has not cleared within 45 seconds, fire the other container. If the alarm is cleared the container will not fire at the completion of the delay sequence, but will then be ready for immediate discharge upon receipt of a second signal.

AUTOMATIC FIRE DETECTION AND SUPPRESSION SYSTEM - ENGINE SPACE (See Figure 6)

Dual Thermal Sensors, Self-Interrogating, Single Extinguisher

Dual sensing elements are located in the engine compartment to intercept any flame paths in the event of fire. Control circuitry upon signal from only one sensor would take automatic action to determine the status of the nonresponding system, and depending on its status, actuate the automatic suppression system or not.

If the tested sensor is functioning properly, the first signal must then be false, and the fire extinguishing sequence is not initiated. However, if the second

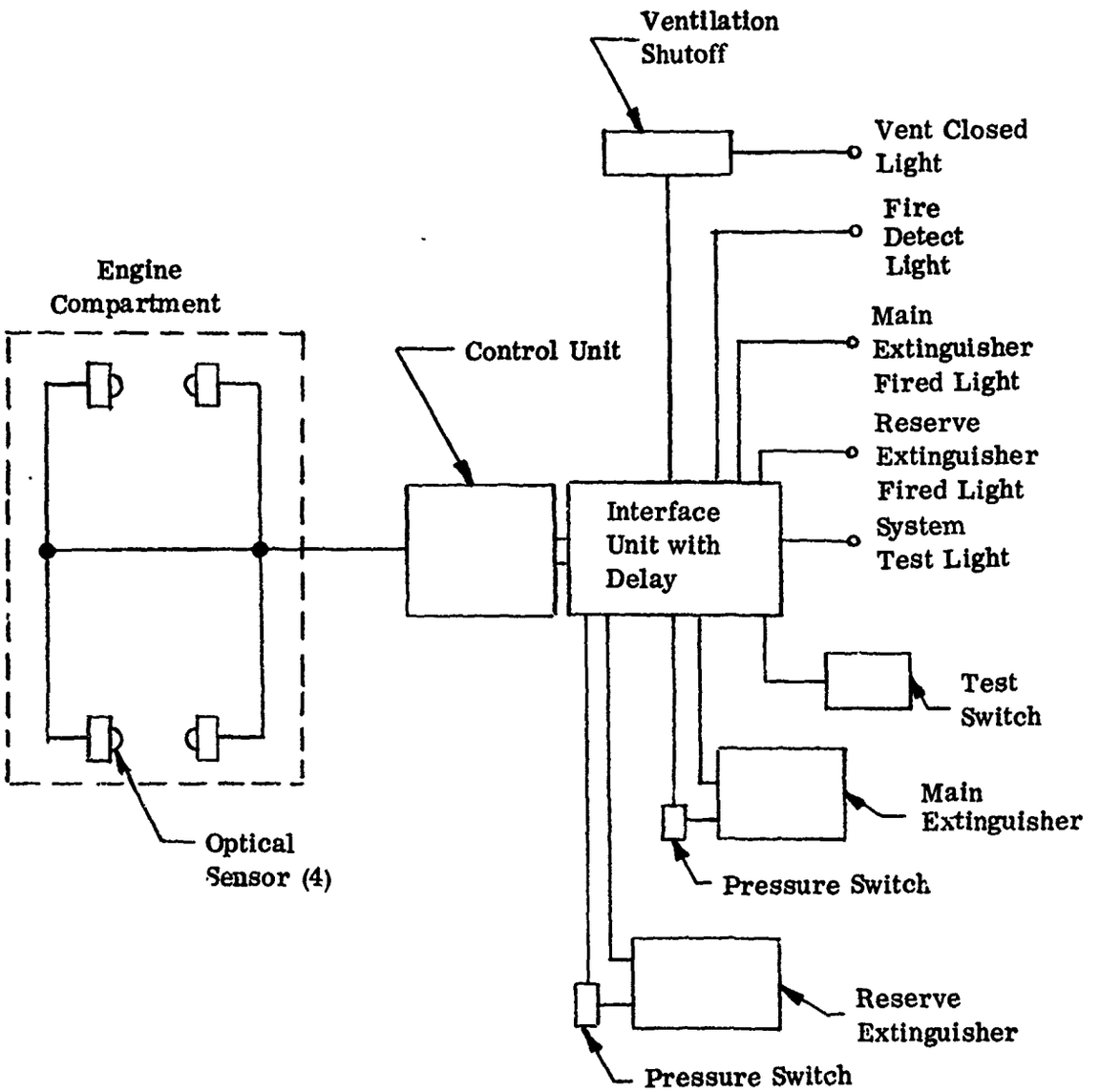

Figure 5. Automatic Fire Detection and Suppression System, Engine Space - Single Optical Detectors, Main and Reserve Extinguishers.

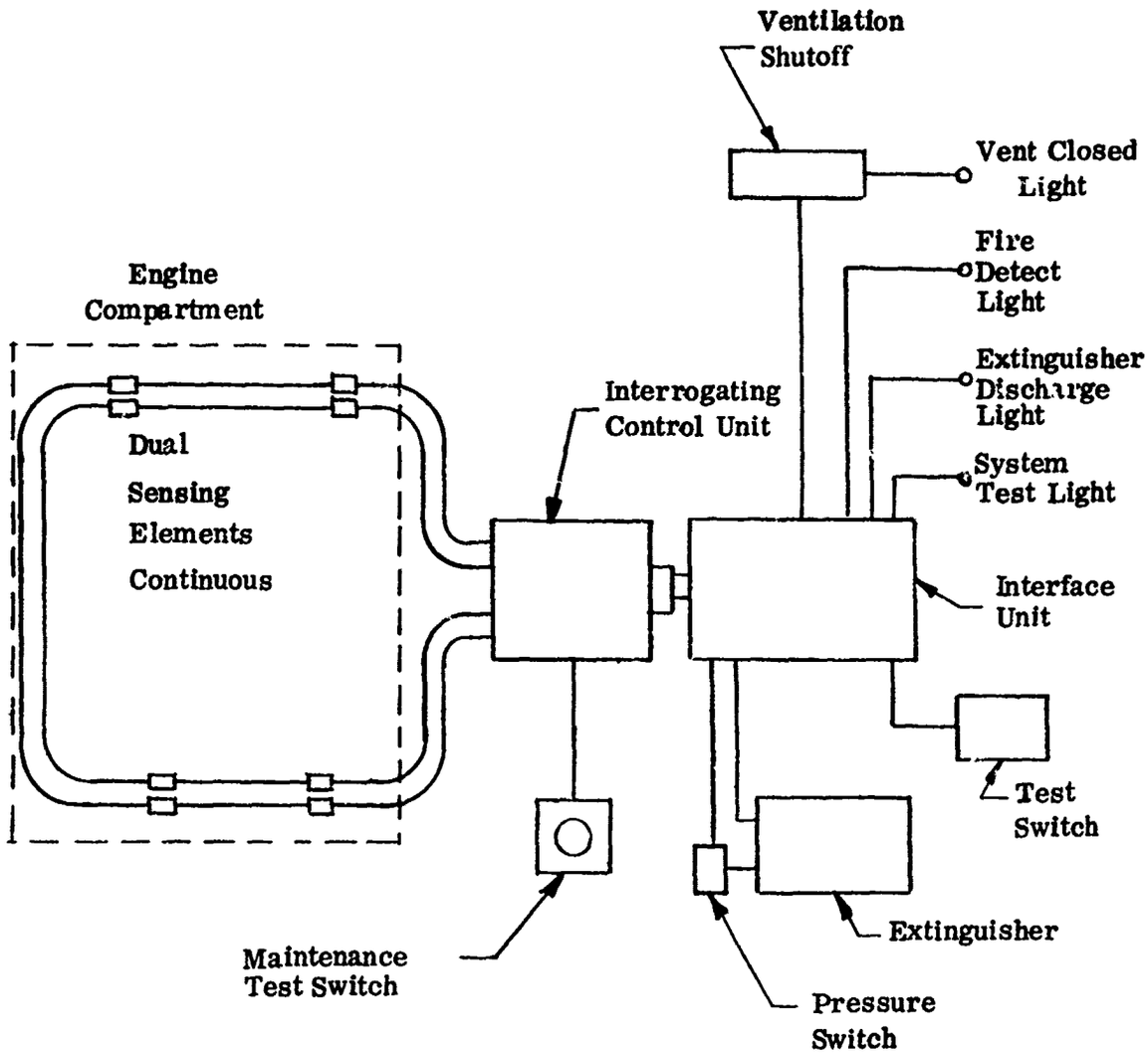

Figure 6. Automatic Fire Detection and Suppression System, Engine Space - Dual Thermal Detectors, Self-Interrogating, Single Extinguisher.

sensor fails the test, the first signal must then be considered true, and the fire extinguishing sequence is triggered.

With the self-interrogating circuit, the cockpit integrity test will test good if only one sensor in each control circuit is operative, thus permitting dispatch of the aircraft, if necessary, since that provides a minimum operating system. A second test switch is provided to maintenance action which tests all functions of the detection system.

The system beyond this point is identical with previously discussed engine space systems.

AUTOMATIC FIRE DETECTION AND SUPPRESSION SYSTEM - ENGINE SPACE (See Figure 7)

Dual Thermal Sensors, Self-Interrogating, Dual Extinguisher

This system adds a second or reserve shot of extinguishant to the dual thermal sensors self-interrogating, single extinguisher system. A time delay circuit is employed to the reserve container.

The container firing circuit will fire one bottle immediately. It will also initiate a time delay mechanism, and if the alarm has not cleared within 45 seconds, fire the other container. If the alarm is cleared, the container will not fire at the completion of the delay sequence but will then be ready for immediate discharge upon receipt of a second signal.

AUTOMATIC FIRE DETECTION AND SUPPRESSION SYSTEM - ENGINE SPACE (See Figure 8)

Dual Optical Sensors, Self-Interrogating, Single Extinguisher

This system differs from those previously discussed only in that it employs four optical sensors installed in the engine compartment, mounted near the deck, one in each of the four corners and pointed toward the engine and upward. Thus, any fire occurring in the compartment will be in view of at least two sensors on one side of the engine. With the two sensors pointing in approximately opposite directions, it is unlikely that any stray light which might actuate one detector would actuate both. The two sensors on one side will be connected to one control unit, while the two sensors on the other side will be connected to another control unit.

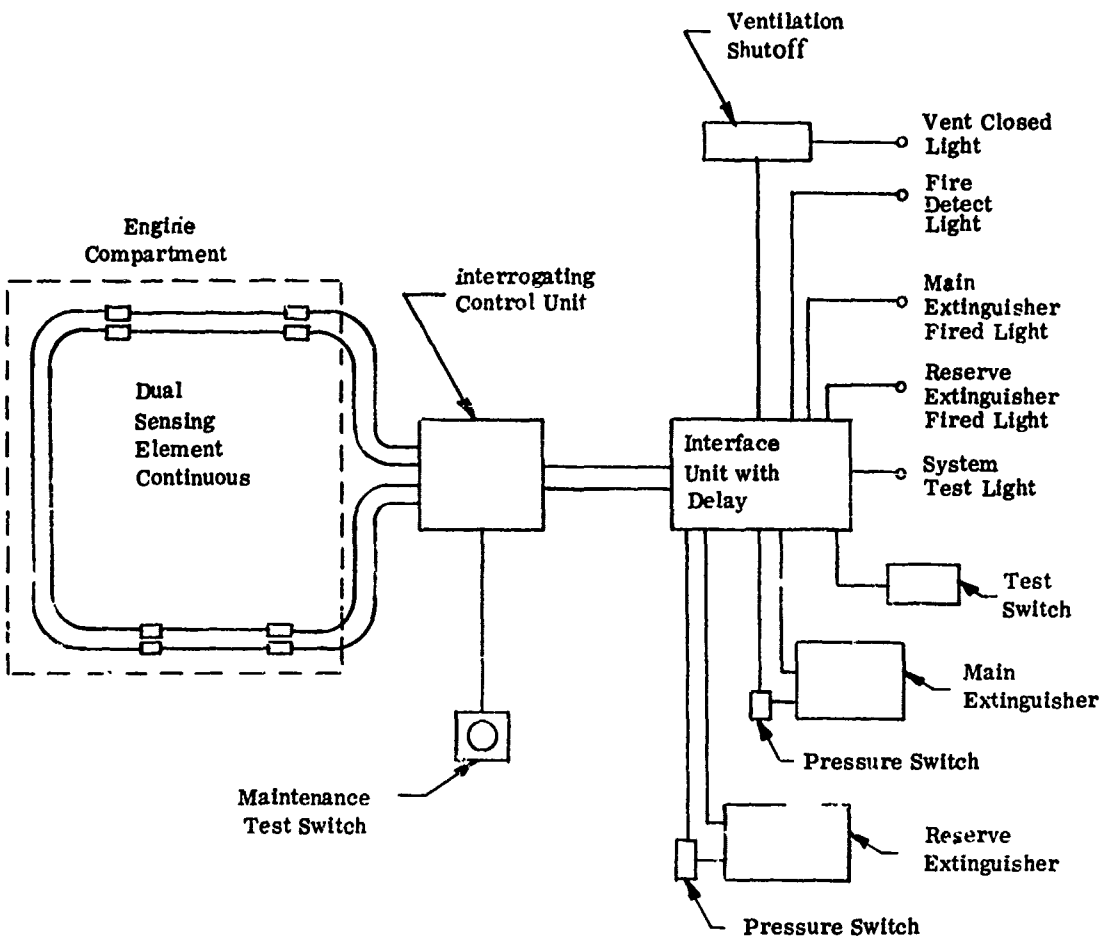

Figure 7. Automatic Fire Detection and Suppression System, Engine Space - Dual Thermal Detectors, Self-Interrogating, Main and Reserve Extinguishers.

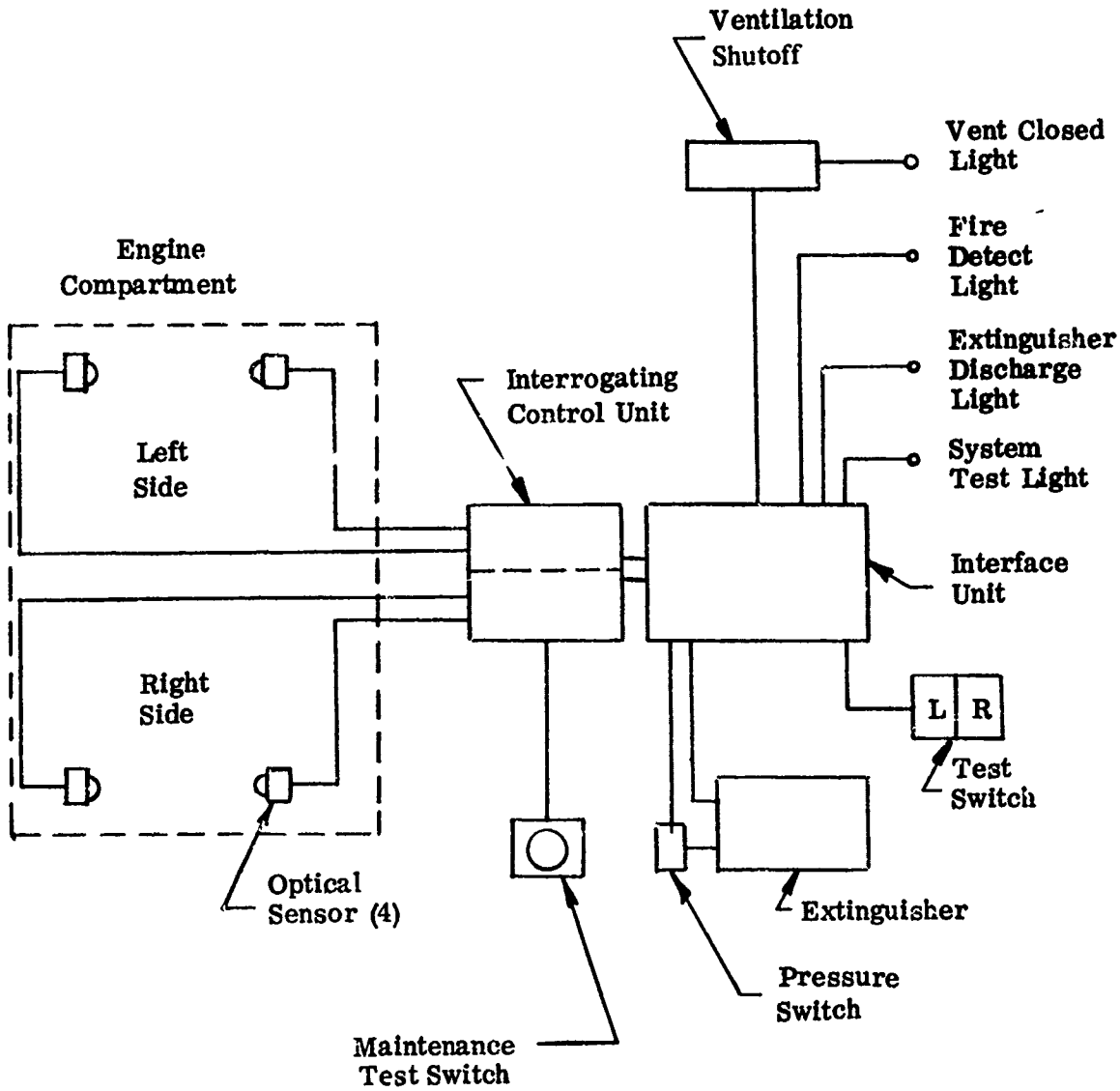

Figure 8. Automatic Fire Detection and Suppression System, Engine Space - Dual Optical Detectors, Self-Interrogating, Single Extinguisher.

Either control unit (a fire on either side of the engine) may initiate the extinguishing sequence. Normally, both sensors would have to activate the control unit to initiate the extinguishing sequence, but upon receipt of a signal from only one sensor, the other sensor is automatically interrogated (tested).

If the tested sensor is functioning properly, the first signal must then be false, and the fire extinguishing sequence is not initiated. However, if the second sensor fails the test, the first signal must then be considered true, and the fire extinguishing sequence is triggered.

With the self-interrogating circuit, the cockpit integrity test will test good if only one sensor in each control circuit is operative, thus permitting dispatch of the aircraft, if necessary, since that provides a minimum operating system. A second test switch is provided for maintenance action which tests all functions of the detection system.

AUTOMATIC FIRE DETECTION AND SUPPRESSION SYSTEM - ENGINE SPACE (See Figure 9)

Dual Optical Sensors, Self-Interrogating, Dual Extinguishers

This system adds a second or reserve shot of extinguishant to the dual optical self-interrogating, single extinguisher system. A time delay circuit is employed to the reserve container.

The container firing circuit will fire one bottle immediately. It will also initiate a time delay mechanism, and if the alarm has not cleared within 45 seconds, fire the other container. If the alarm is cleared the container will not fire at the completion of the delay sequence, but will then be ready for immediate discharge upon receipt of a second signal.

AUTOMATIC FIRE DETECTION AND SUPPRESSION SYSTEM OIL - COOLER COMPARTMENT (See Figure 10)

This system consists of a pair of optical sensors, each of which will include the oil cooler, heater, battery rack and the floor of the compartment in its field of view. Either sensor, through the control unit and interface unit, will automatically actuate the fire extinguisher. The fire extinguisher will be a rechargeable container of Halon 1301 (CF_3Br), pressurized with nitrogen gas to 600 psi to give a high rate discharge (HRD) in accordance with MIL-C-22284.

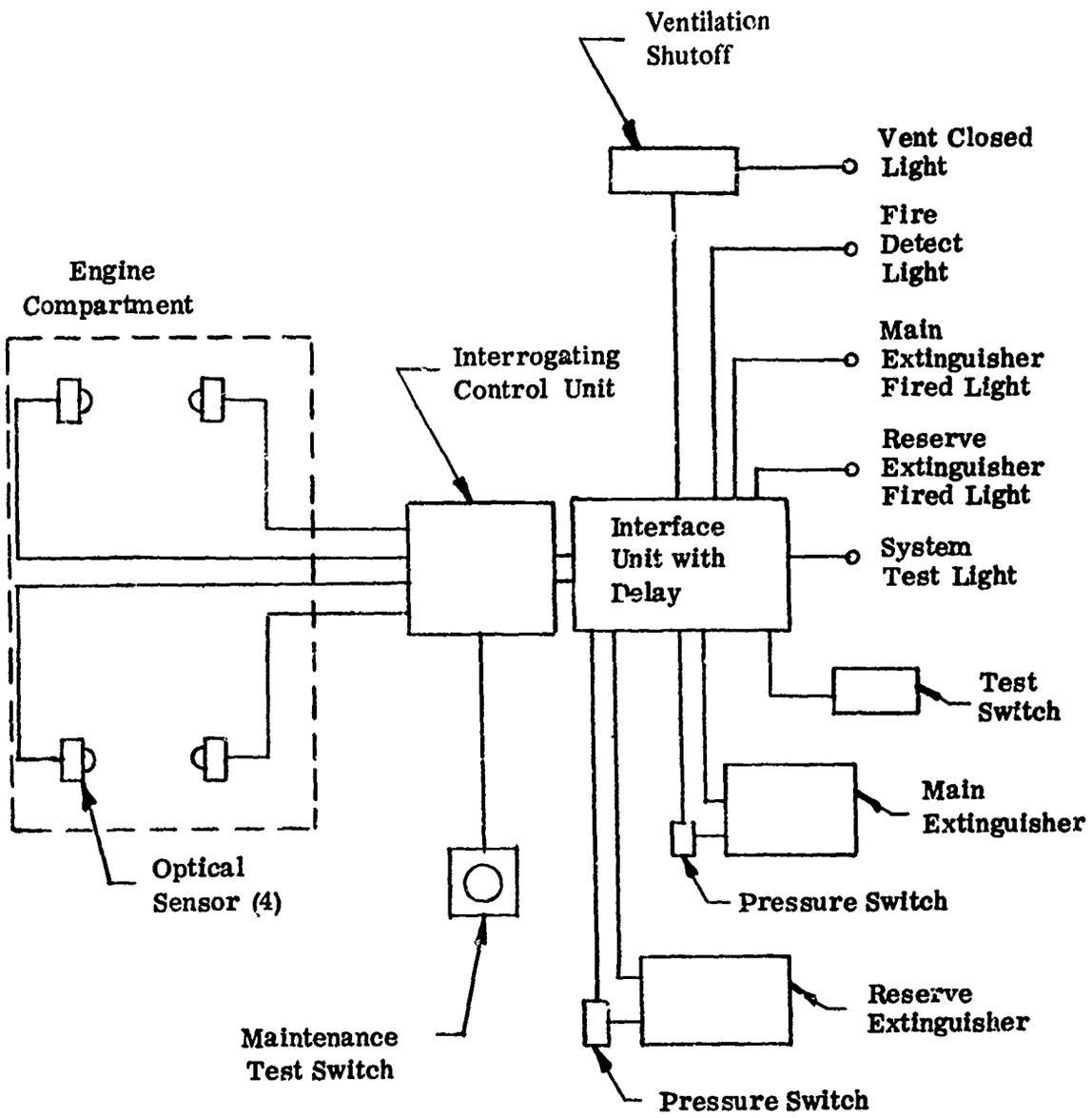

Figure 9. Automatic Fire Detection and Suppression System, Engine Space - Dual Optical Detectors, Self-Interrogating, Main and Reserve Extinguishers.

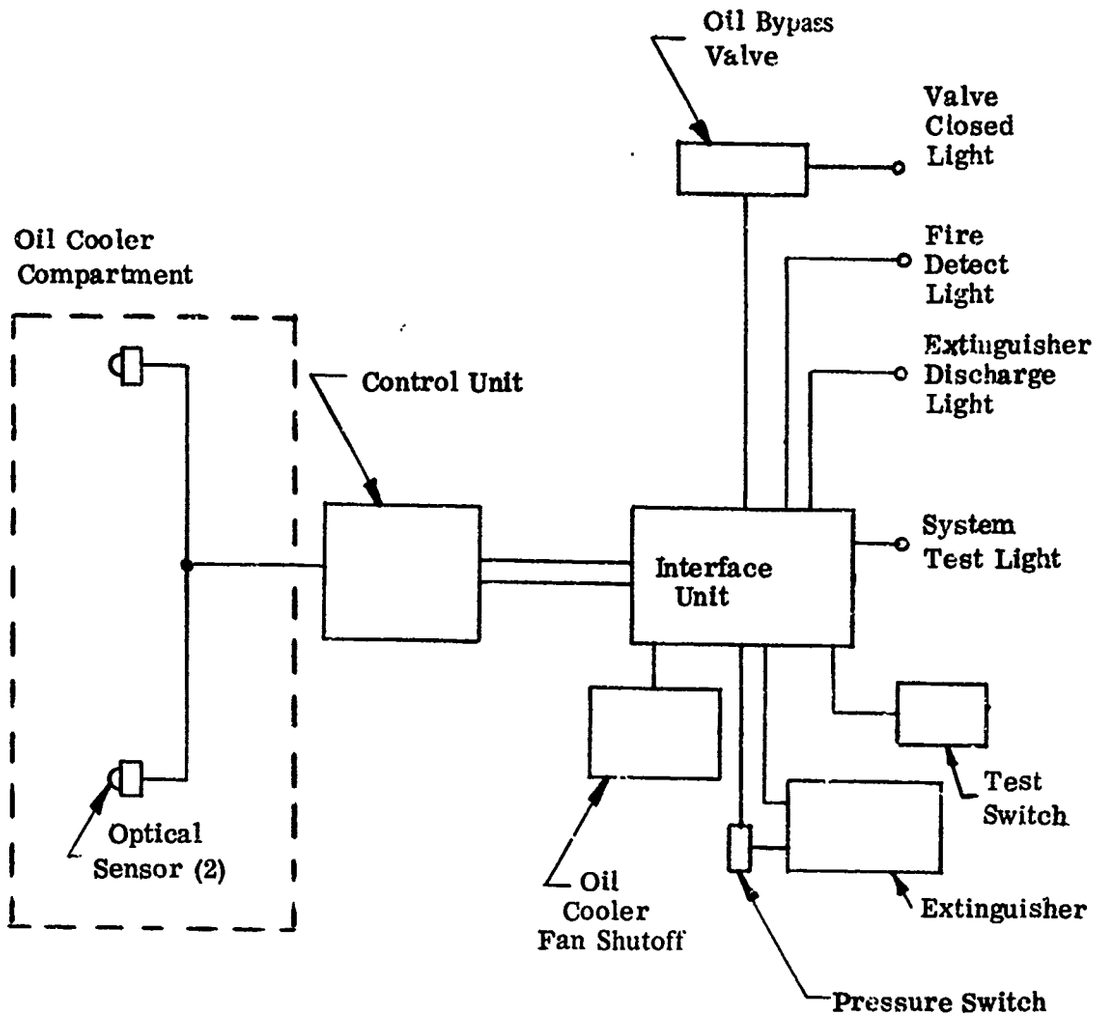

Figure 10. Automatic Fire Detection and Suppression System, Oil Cooler Compartment - Single Optical Detector and Extinguisher.

An oil bypass valve, installed across the oil cooler, will be activated simultaneously to divert oil from the oil cooler compartment, which presumably will be the combustible. Bypassing the oil, instead of shutting down the flow, will permit continued operation of the engine for a period of time. The oil cooler fan will also be shut down by the interface unit upon the fire signal, thus reducing the compartment ventilation to a very small rate. This will allow the extinguishant to maintain an inert atmosphere and prevent restriking of the fire.

Indications to the cockpit will be a light controlled by the interface unit showing activation of the system, and a light controlled by a pressure switch in the extinguishing container outlet showing discharge of the extinguishant. Thus, the crew is aware of a fire breakout, and aware that the extinguishant has been discharged. If the fire is extinguished promptly, the detector will reset and extinguish the fire alarm light, advising the crew the fire is under control. Should the first discharge be ineffective, a delay circuit in the interface unit discharges a reserve container of extinguishant which will be indicated in the cockpit by a second "extinguisher fired" light. Again, if the fire is extinguished, the alarm light will go out. By these indicators, the crew will also be advised that the oil is now bypassing the oil cooler, so that it may be considered in engine operation and continued flight.

A test circuit is provided, actuated by a switch in the cockpit, which checks the functioning of the detectors, interface unit, and continuity of wiring to and through the extinguisher cartridge. A light is furnished which, when illuminated upon test, assures the system integrity. A transfer relay in the interface unit transfers the extinguisher cartridge for the continuity test to a source of current limited to 0.5 ampere - not enough to fire the cartridge. If the transfer relay "hangs up" after the test, the test light will not extinguish, indicating a malfunctioning system.

ALTERNATE (See Figure 11)

To provide reliability beyond that possible with a single detection system, this alternate provides that both sensors normally be activated by fire to initiate the extinguishing sequence. However, a control unit is provided that upon receipt of a signal from only one sensor automatically interrogates (tests) the second sensor. If the second sensor tests good, the signal received from the first is treated as false. If, however, the second sensor fails to test, the extinguishing sequence is initiated.

The cockpit test for this alternate will give a "go" signal if only one of the redundant sensors is operative, thus permitting dispatch of the aircraft. A second test switch is provided for use by the maintenance crew that tests all the functions of the detection system.

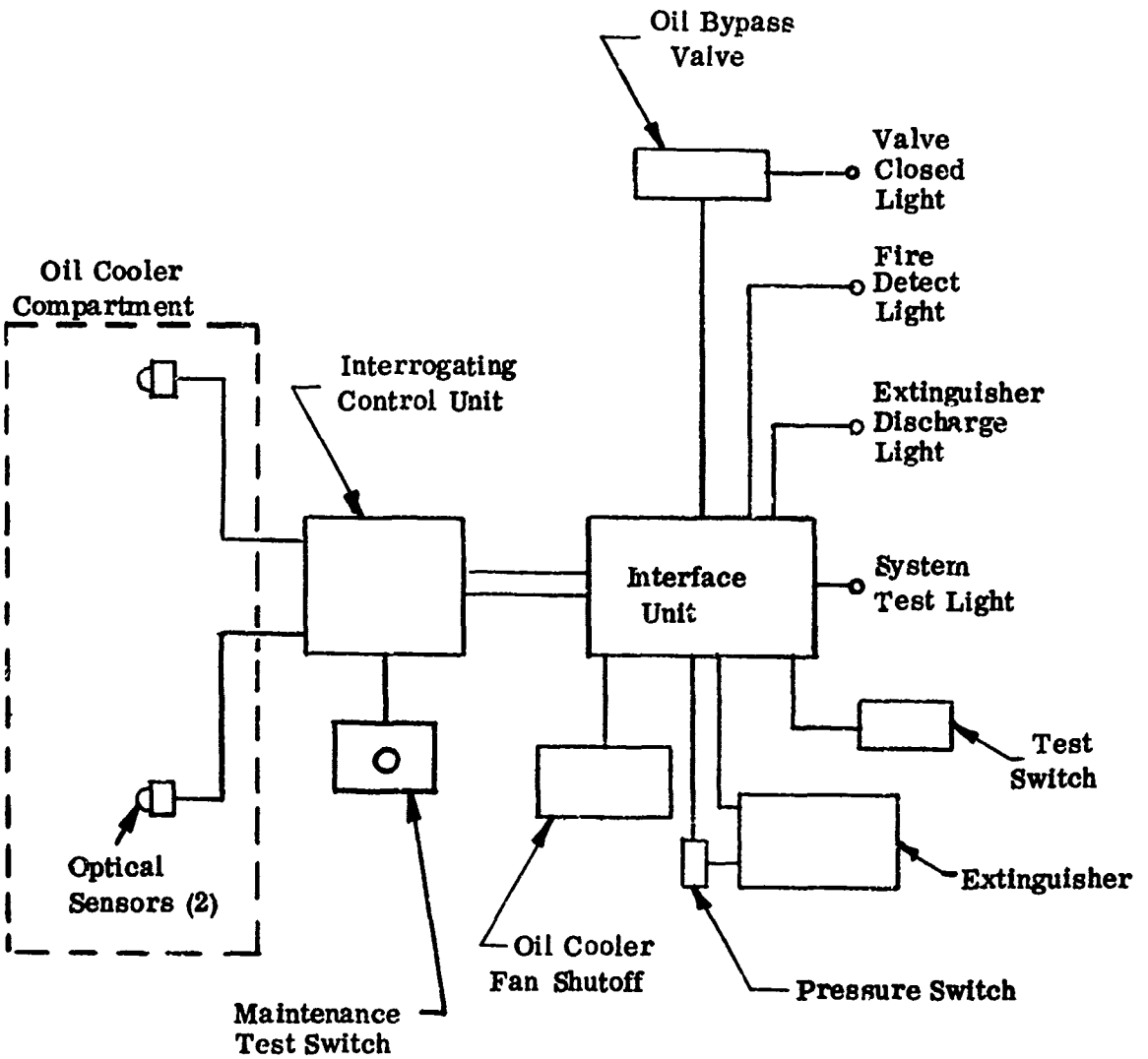

Figure 11. Automatic Fire Detection and Suppression System, Oil Cooler Compartment - Dual Optical Detectors, Self-Interrogating, Single Extinguisher.

ALTERNATES (See Figures 12 and 13)

This alternate provides a two-shot, main and reserve extinguisher for either of the two preceding detector systems.

The container firing circuit will fire one bottle immediately. It will also initiate a time delay mechanism, and if the alarm has not cleared within 45 seconds, fire the other container. If the alarm is cleared the container will not fire at the completion of the delay sequence, but will then be ready for immediate discharge upon receipt of a second signal.

AUTOMATIC FIRE DETECTION AND SUPPRESSION SYSTEM (See Figure 14)

Electrical Equipment Compartment

In electrical compartments, fires start as overheated electrical components. Smoke is generated as insulation chars long before flame occurs, or before sufficient heat is generated to raise the compartment temperature enough to trigger a thermal alarm. Thus, this system will use smoke detectors. The smoke detector will be placed in the path of compartment airflow at its outlet. The smoke detector, through its control unit, will activate the interface unit, which in turn will interrupt all power to that compartment. This will require a master electrical shutoff device for each separate electrical compartment to be protected. It will be necessary to alert the crew to this shutdown. This will be accomplished by illuminating a warning light in the cockpit.

The integrity of the system can be tested from the cockpit by actuating a test switch which functionally tests the smoke sensor, checks the operation of the control unit and interface unit, and checks the continuity of the wire leading to the electrical shutoff device. A transfer relay in the interface unit transfers the shutoff device to a source of test current that is limited to a value well below the operating threshold of the device. Should the transfer relay "hang up" on release of the test switch, the test light will not extinguish, indicating a malfunctioning system.

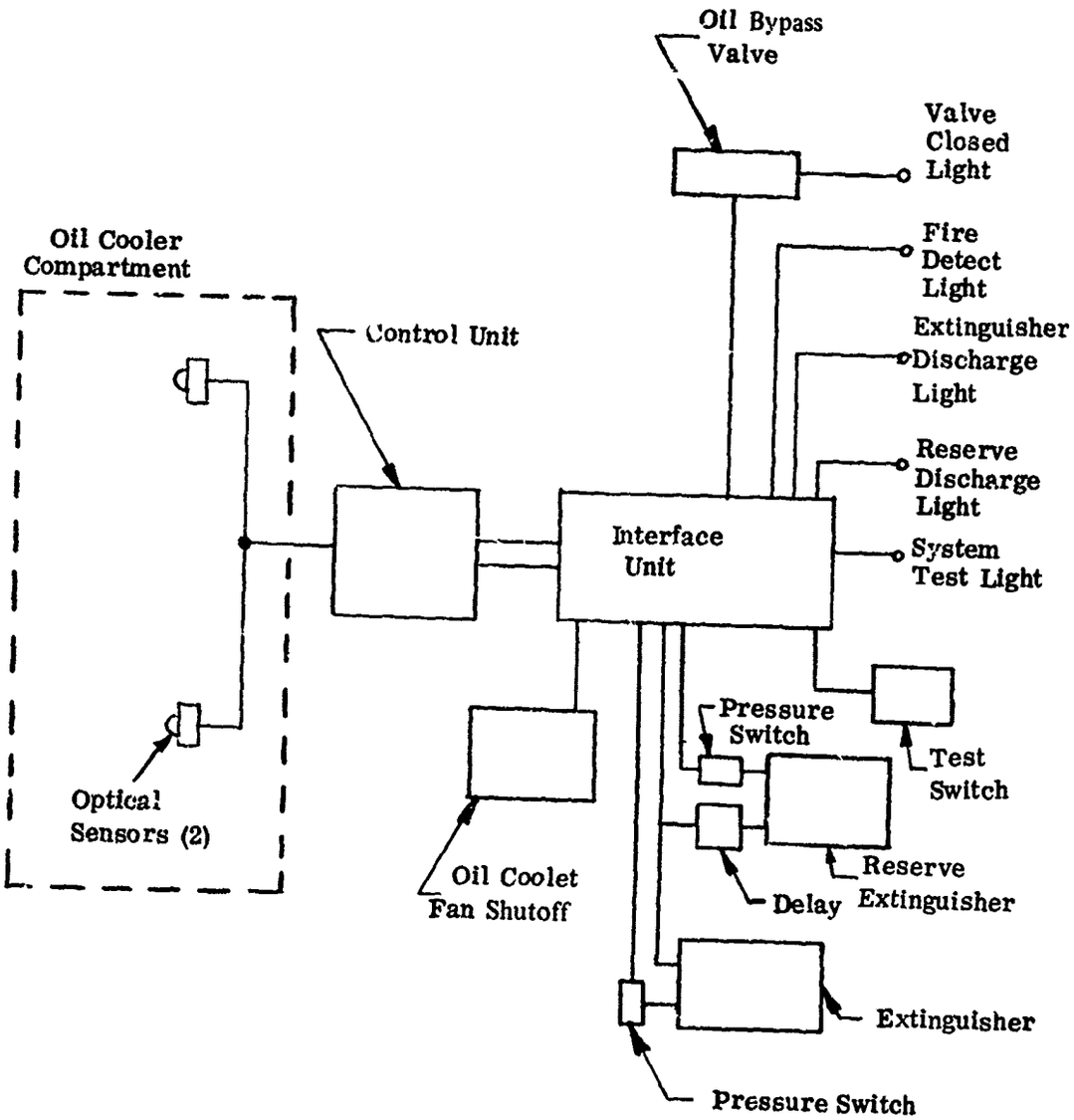

Figure 12. Automatic Fire Detection and Suppression System, Oil Cooler Compartment - Single Optical Detector, Main and Reserve Extinguishers.

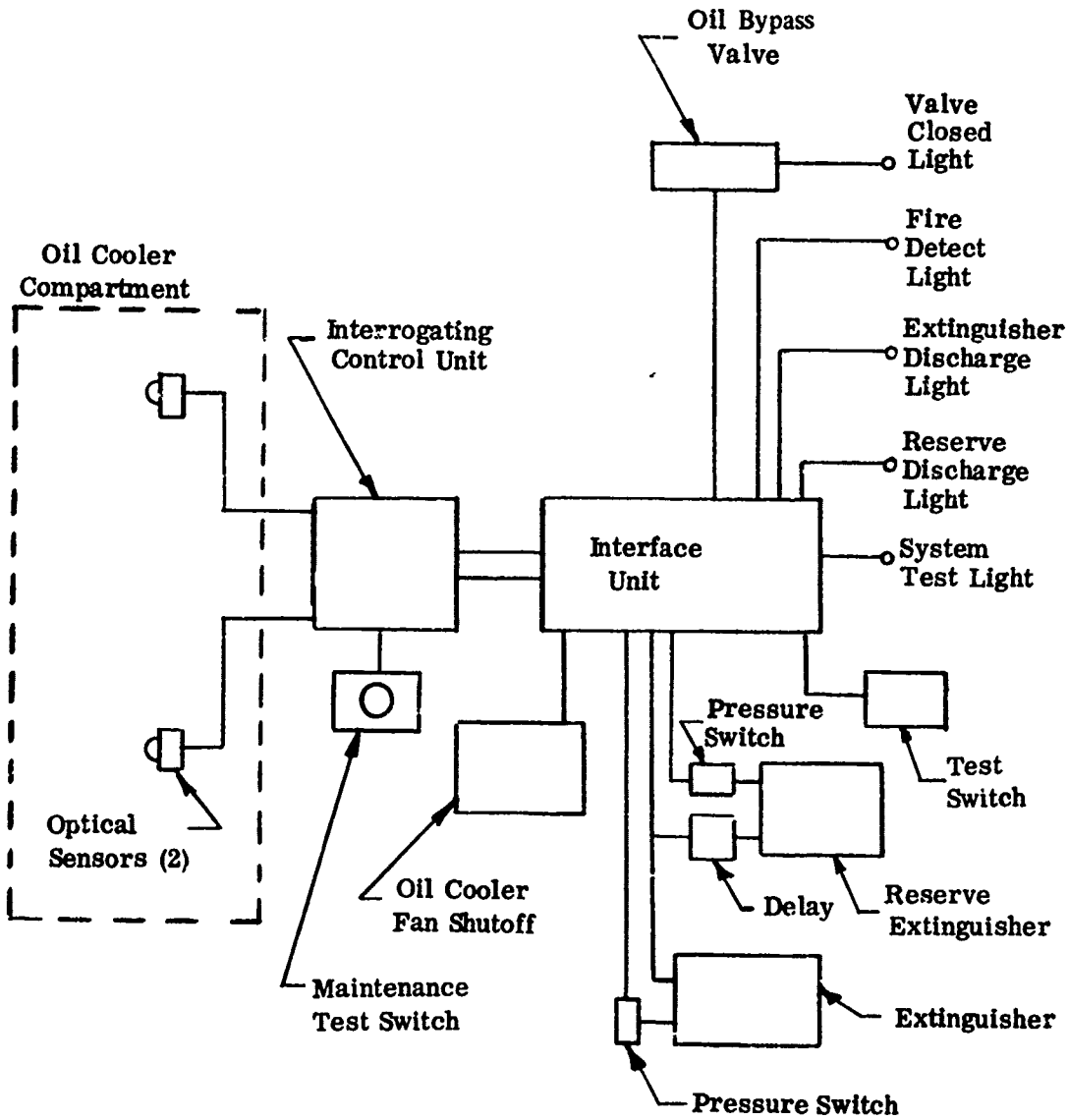

Figure 13. Automatic Fire Detection and Suppression System, Oil Cooler Compartment - Dual Optical Detectors, Self-Interrogating, Main and Reserve Extinguishers.

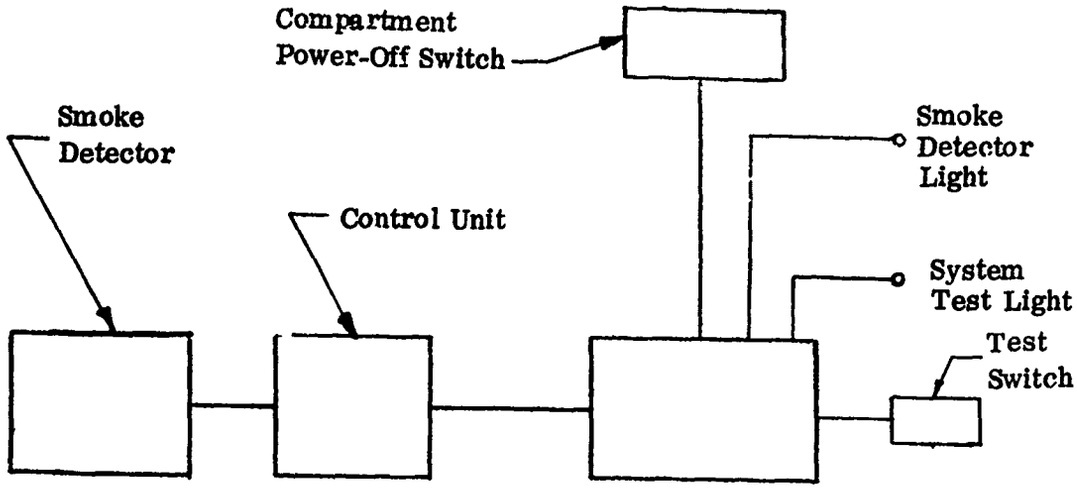

Figure 14. Automatic Fire Detection and Suppression
Electrical Equipment Space
Smoke Detector and Power Shutoff.

ALTERNATE (See Figure 15)

Merely shutting off electrical power to an electrical compartment where an overheated component has caused generation of smoke may not be sufficient. It is possible that combustibles may be present and ignited. In such an event, the shutoff action must be supplemented by active extinguishing means. In this alternate system an extinguisher is provided, along with the electrical shutoff, which is also actuated by the interface unit in response to the signal from the smoke detection system.

An indicator light is provided in the cockpit which is energized through a pressure switch in the extinguisher outlet lines and which indicates extinguisher discharge.

The extinguisher is a container of Halon 1301 (CF_3Br) pressurized with nitrogen gas to 600 psi to provide discharge energy. The 10-amp firing current required for the explosive cartridge-actuated discharge valve is also provided by the interface unit.

With an extinguisher, the integrity test will also test the continuity of the wiring through the cartridge, the transfer relay providing a source of test current limited to 0.5 ampere, well below the firing threshold.

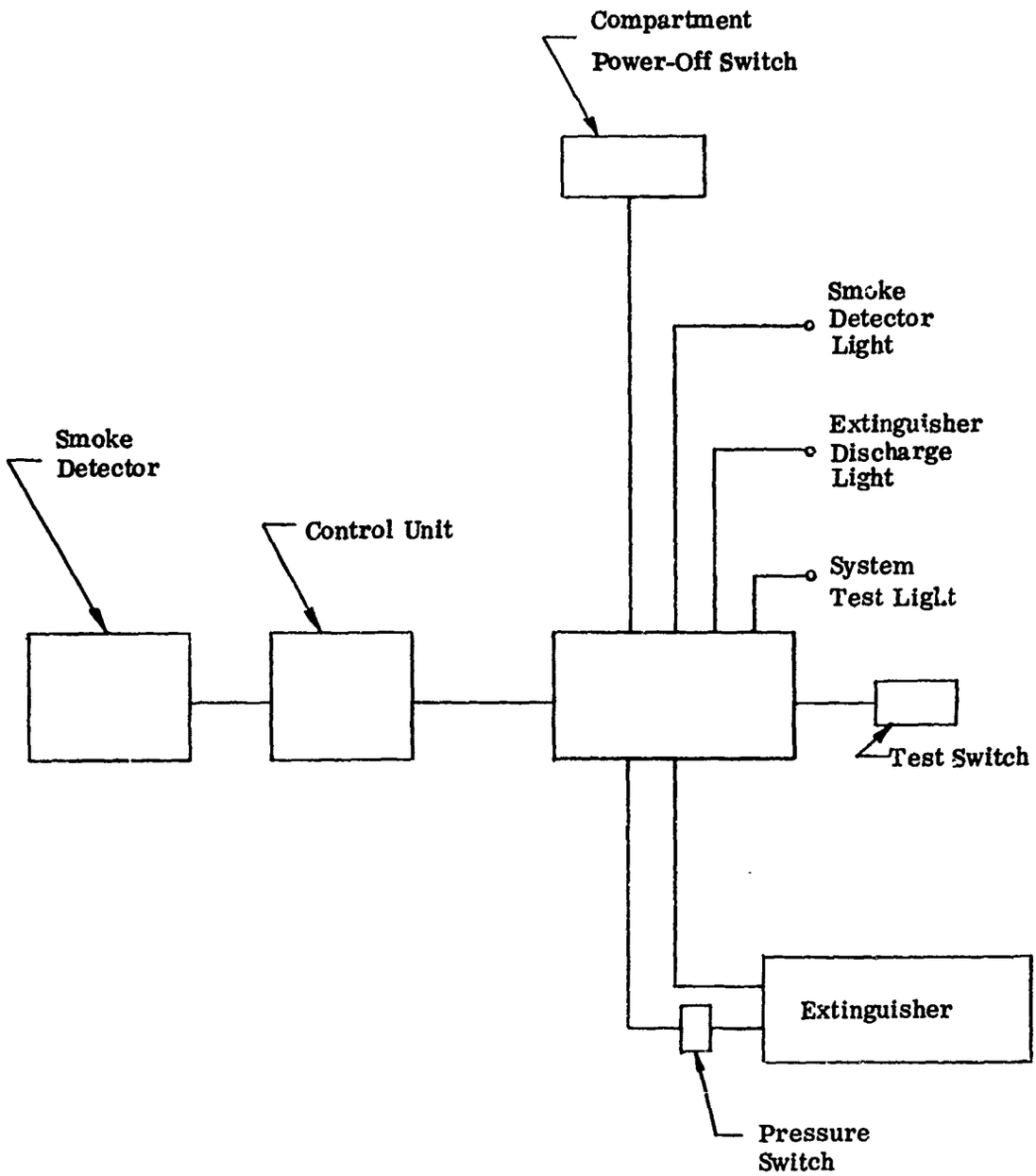

Figure 15. Automatic Fire Detection and Suppression
Electrical Equipment Space
Smoke Detector, Power Shutoff and Extinguisher.

AUTOMATIC FIRE DETECTION AND SUPPRESSION SYSTEM - SPACES SURROUNDING FUEL CELLS (See Figure 16)

Single Thermal Detector, Single Extinguisher

This system consists of thermal detector continuous sensing elements strung through all the void spaces adjacent to and surrounding all the fuel cells. Should fire occur, the heat will activate the sensor and its control unit, providing a fire signal.

The interface unit accepts the detector fire signal and directs the 10-amp firing current to the extinguisher. The extinguisher is a container of Halon 1301 (CF_3Br) pressurized with nitrogen gas to 600 psi to provide discharge energy. Upon discharge, the extinguishant is directed to all the void spaces surrounding all fuel cells, extinguishing the fire and providing a residual inert atmosphere which is long lasting because of the lack of airflow. Further potential ignitions will therefore be prevented for a period of time.

Indication of the suppression action must be provided to the crew so that they may adjust their flight operations accordingly. A light will be energized by the interface unit to indicate fire detection. Another light will be energized by a pressure switch in the extinguisher outlet line to indicate extinguisher discharge.

A test switch is provided in the cockpit to test the integrity of the system. Operating the test switch checks the functioning of the sensor control units and the interface unit and the continuity of the wires through the extinguisher discharge cartridge. If the test light illuminates in test, it indicates the system is "go". A transfer relay in the interface unit switches the extinguisher cartridge to a current source that is limited to 0.5 ampere, well below the cartridge firing threshold. If the transfer relay "hangs up" on test, the test light will not extinguish after test, indicating a system malfunction.

FUEL CELL - AUTOMATIC EXPLOSION SUPPRESSION SYSTEM (See Figure 17)

This system consists of a capsule of extinguishant mounted in the fuel cell, and explosively dispersed in the ullage space by a signal from a fast-acting sensor. The sensor may be either an optical device sensing infrared radiation from the flame which precedes the explosion, or a pressure-sensing device which senses the pressure buildup from a beginning explosion. The choice of sensor depends on the configuration of the fuel cell. (If the cell has baffles which would obstruct light, the pressure sensor is used.)

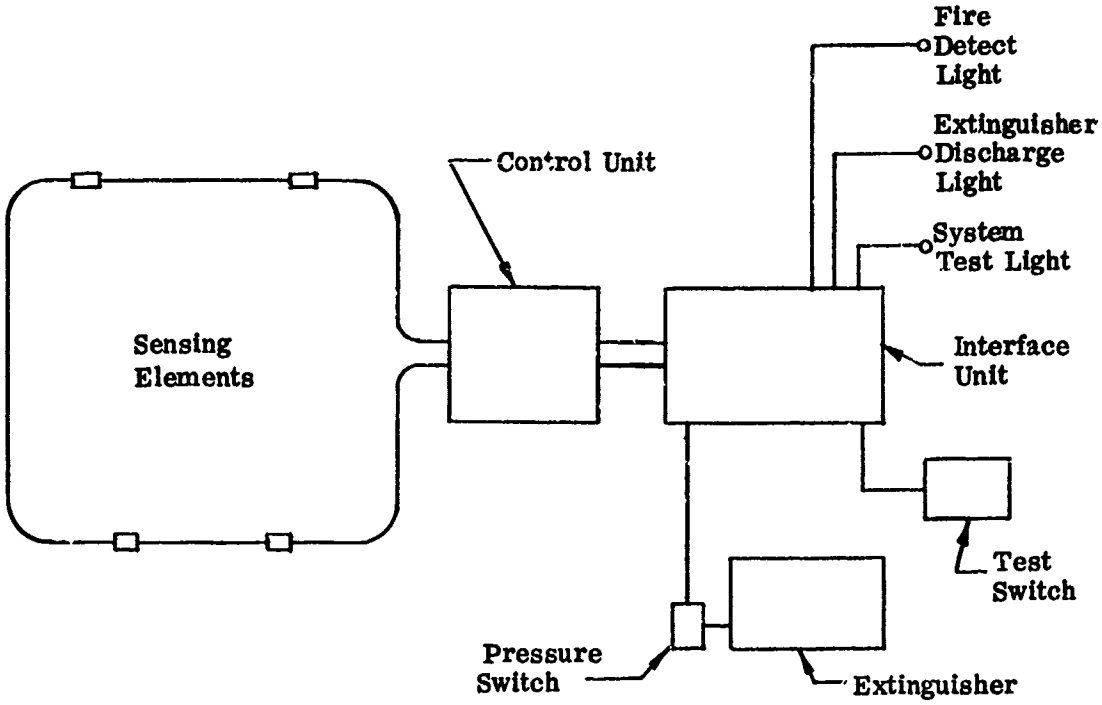

Figure 16. Automatic Fire Detection and Suppression Spaces Surrounding Fuel Cells - Thermal Detector, Extinguisher.

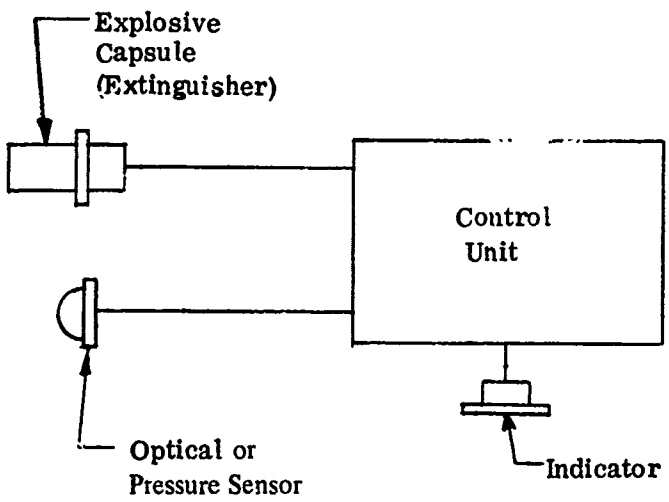

Figure 17. Automatic Fire Detection and Suppression Fuel Cell Explosion Suppression System.

ALTERNATE (See Figure 18)

An alternate explosion suppression system would be to maintain an inert atmosphere in the tank ullage by bleeding in nitrogen gas as fuel is withdrawn. This would require a closed tank system, with pressure relief and vent valves, and a regulated supply of nitrogen to replace vented atmosphere as the aircraft moves up and down in altitude.

Systems of both of these types have been developed for Military aircraft use, and will not be discussed further here nor tested, since sufficient test data should be available.

While conditions are limited under which the ullage vapors are flammable, they do exist. Provision of self-sealing fuel cells in the UH-1, may, or may not, prevent an explosion if combustible mixture is present when an incendiary bullet pierces the cell.

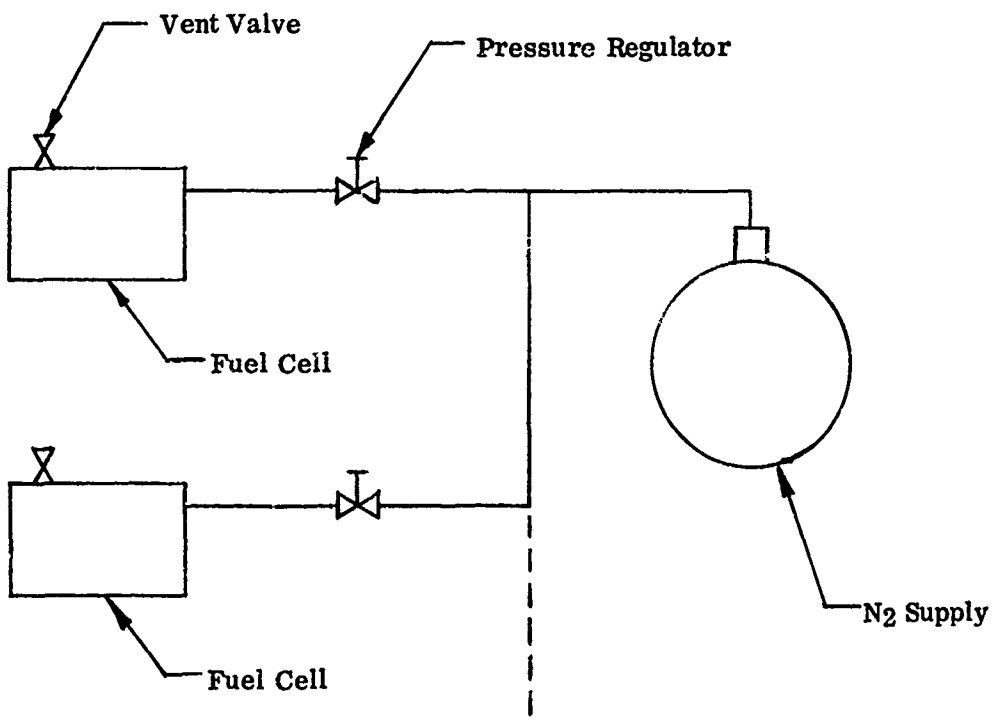

Figure 18. Automatic Explosion Suppression (Inerting) System - Helicopter Fuel Cells.

TEST PROGRAM

The test phase of this program was designed to establish that the functions of two separate proven systems, Fire Detection and Fire Extinguishing, can be married into a Fire Suppression System, and that such a system will function in a simulated helicopter environment under actual fire conditions.

The engine space, electrical compartment, and oil cooler compartment as applied to the UH-1 were included in the test program. Compartments simulating these parts of the helicopter were fabricated from foil-covered plywood and sheet metal. Fires representative of those which might be expected in actual service were initiated in these spaces and the performance of the hardware recommended for these installations was observed to determine its suitability.

In the engine compartment, two types of detectors, thermal continuous and red-blue optical, were tested. Each of these was explored in two modes. Each was tested as a single system and as a dual system with self-interrogating control unit.

Tests were conducted with the visual detector in the oil cooler compartment, and with the smoke detector in the left rear electronics space. This area is considered representative of electrical compartments. The major emphasis was placed on the engine space since this represents the greatest hazard area in both frequency and severity of the reported fires.

BENCH TESTS OF DETECTOR

The characteristics of both the continuous and optical detectors were examined for possible faults which would render the system inoperative or cause false alarms.

The continuous detector responds to heat, and care must be taken in selection and installation; it must not be subjected to temperature conditions that it might respond to as it would to fire. The visual detector used responds to light in the near infrared except when accompanied by light in the visible blue-green wavelength. It will therefore not alarm from daylight. However, the balance is such that it will require a very strong red light or fire to cause alarm in bright daylight.

An area which has posed a problem in the past in fire detector installation is moisture in connectors. The continuous detector used which employs a low DC voltage will not alarm even when coupled under salt water.

The visual detector was not affected by tap water in the connectors and would respond to the test lamp while fully immersed in a jar of water. The visual detectors were, however, rendered inoperative by salt water in their connectors which resulted from immersing a detector heated to 160°F in the salt water. This would be preferred to a false warning; however, the activation of the test circuit while the units were inoperative produced a positive response, indicating that the system was operative when in truth the system was disabled.

This condition would be highly undesirable in a self-interrogating system, since the system is programmed to ignore an alarm if the paired sensor does not alarm but does demonstrate integrity when the test circuit is automatically activated. A true alarm from an actual fire would therefore be ignored.

ENGINE COMPARTMENT

The engine compartment mock-up is shown in Figure 19. It is fitted with pneumatically operated louvers to cut off the airflow and delay reflash by maintaining an inert atmosphere. In changing the configuration of the ventilation openings, an attempt was made to maintain the same open area as in the actual aircraft.

Extinguishing Configuration

The fire extinguishing system consisted of two MIL-C-22284, Type CF-2 containers. Each container is a single outlet, 86 cu. in. unit charged with 2.5 lb of bromotrifluoromethane and fitted with valves having outlets suitable for connecting 5/8-inch tubing, each container discharges into one leg of a directional check tee which directs agent to the discharge tubing and prevents filling the tubing to the opposite bottle, or when a second shot is being used, filling the emptied container.

When the reserve shot was to be used, the control circuit was set up such that if the detector did not clear within 45 seconds, the reserve would fire automatically. If, at the end of 45 seconds, the detectors had cleared, the extinguisher would then fire immediately on the next alarm.

The agent was discharged from an open bulkhead fitting end from the lower rear center of the engine compartment and was directed forward and upward at an angle of approximately 45°.

Gas Concentration Tests

In order to determine the adequacy of the fire extinguishing system, a gas concentration analysis was conducted. The compartment was fitted with 12 pickups

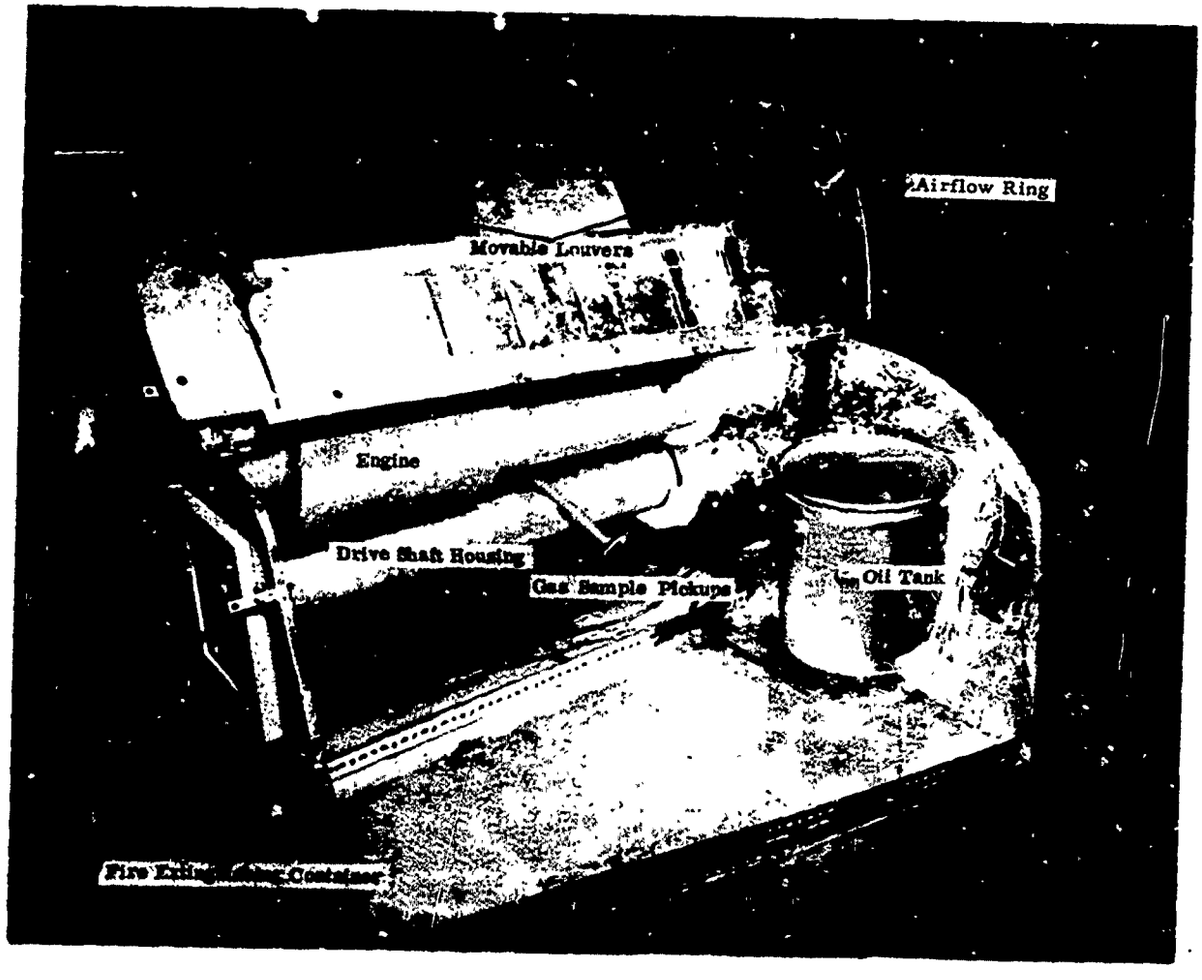

Figure 19. Engine Compartment Mockup.

(1/4-inch copper tubes, 12 feet long) located as shown in Figure 20. These were connected to a Statham Model GA-5 gas analyzer developed specifically to determine fire extinguishing system agent concentration.

The Statham analyzer is a device wherein a gas sample is pulled through heated porous elements by a vacuum pump. The pressure drop established across these elements varies as a function of viscosity and volumetric flow.

The device is calibrated for air and the extinguishing agent used and records percent relative concentration on an oscillograph. This relative concentration can be converted to percent by volume or percent by weight using the curves appearing in the FAA Technical Development Report No. 403. MIL-E-22284 establishes the minimum acceptable limits of relative concentration as 15% for 0.5 second (at all percentages).

A test was conducted with louvers closed. The results of this concentration test are shown in Figure 21.

To explore the effect of compartment airflow, an extinguishing distribution test was conducted with the louvers open. In an effort to simulate airflow as induced by motion of the helicopter, two large pedestal fans were set up blowing across the engine compartment from front to rear. This provided the airflow equivalent of approximately 10 miles per hour. The concentration was more than adequate (see Figure 22).

Since this low flow does not represent a realistic air speed, the front of the compartment was rigged with a half ring of tubing perforated to permit release of high pressure air along compartment skin, providing short duration airflow equivalent to 80 mph. The results of this concentration test run with louvers open and 80 mph airflow are shown in Figure 23. Here again, the requirements were exceeded for both concentration and duration.

Detecting System Configurations

We had previously recommended for this helicopter a fire detector routing with the elements mounted along both sides of the tail rotor drive shaft tunnel. It was felt that such a configuration would pick up any fire from a fuel spill. Upon examination of the actual relationship of the engine and compartment it was realized that any fuel spray from a loose fitting or broken line would fall outside the channeled area at the center of the engine compartment deck. The burning would be kept away from the fire detector elements. An additional set of elements was installed running between the engine and cowl in such a position that flame rising from combustibles would pass directly over them. Both sets of elements were installed in pairs for use as dual systems.

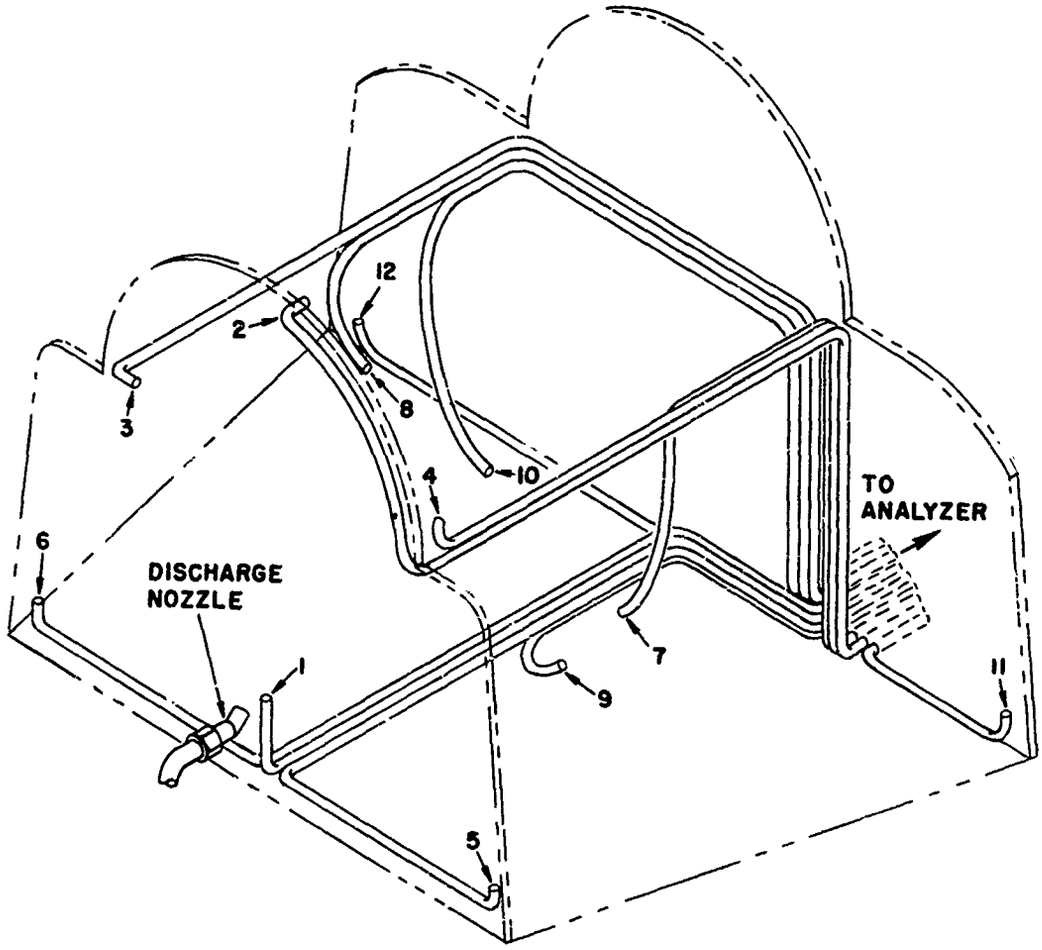

Figure 20. Location of Sampling Tubes in Compartment.

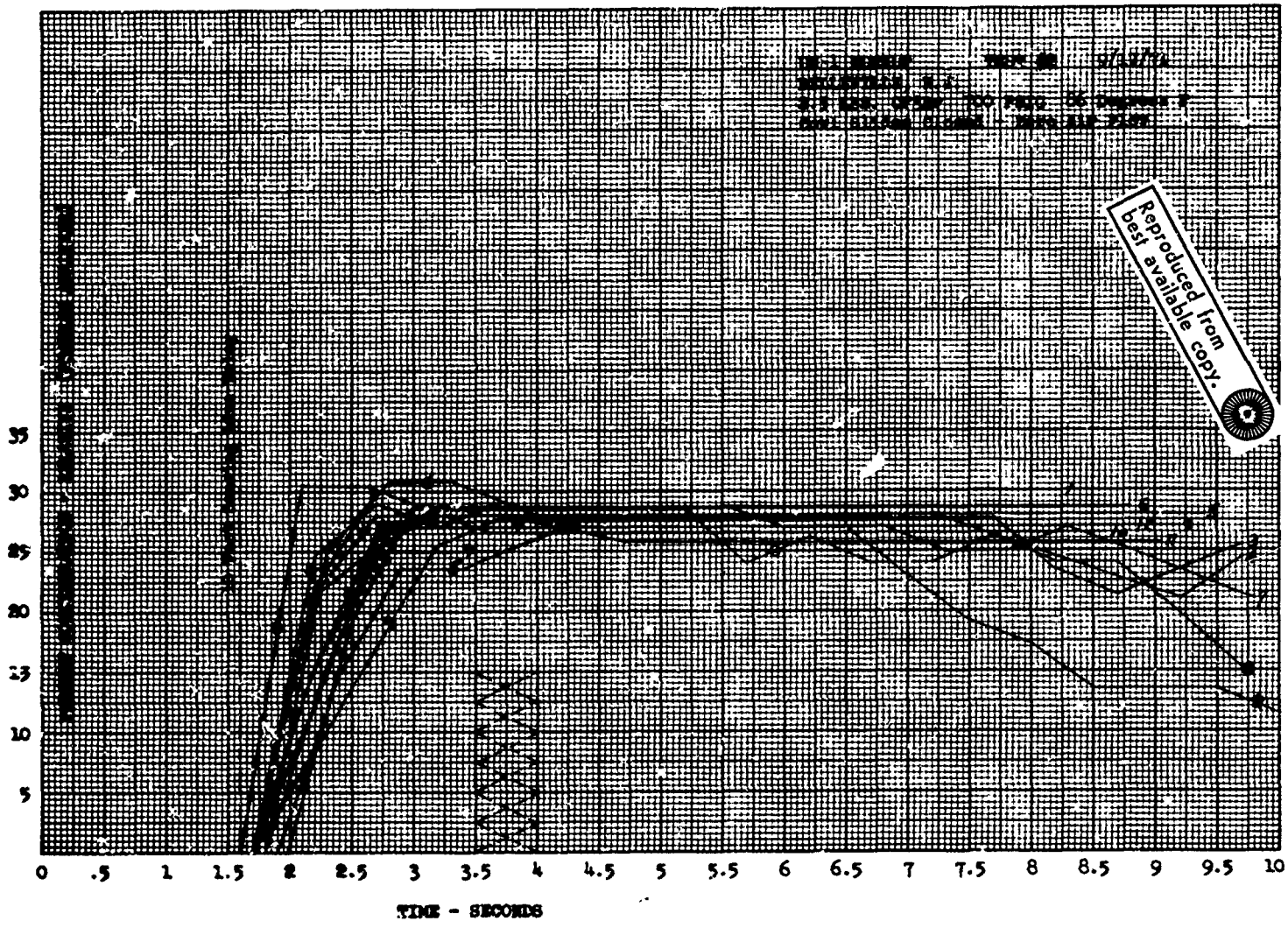

Reproduced from best available copy.

Figure 21. Agent Concentration Plot - Zero Airflow.

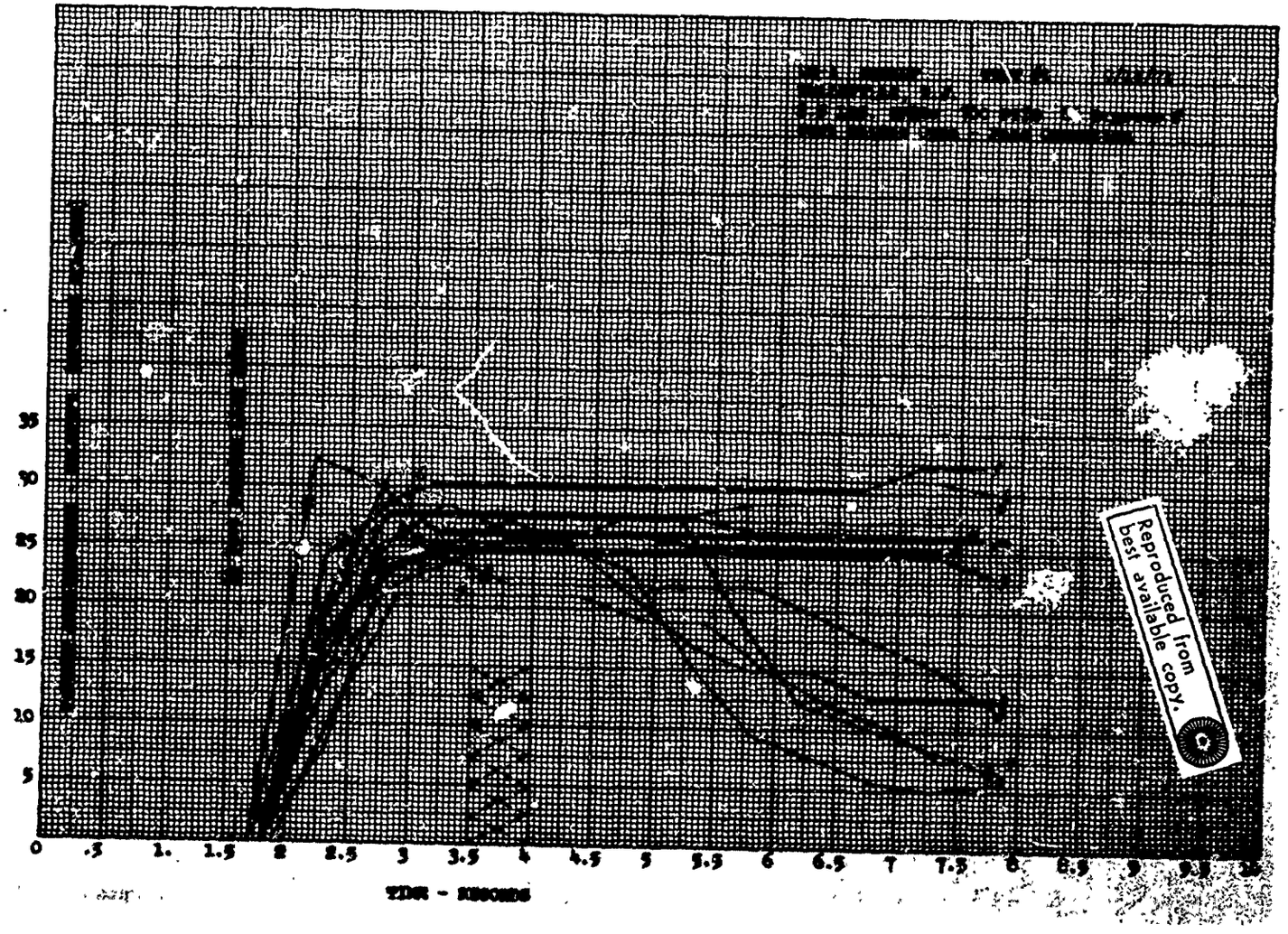

Reproduced from best available copy.

Figure 22. Agent Concentration Plot - 10 mph Airflow.

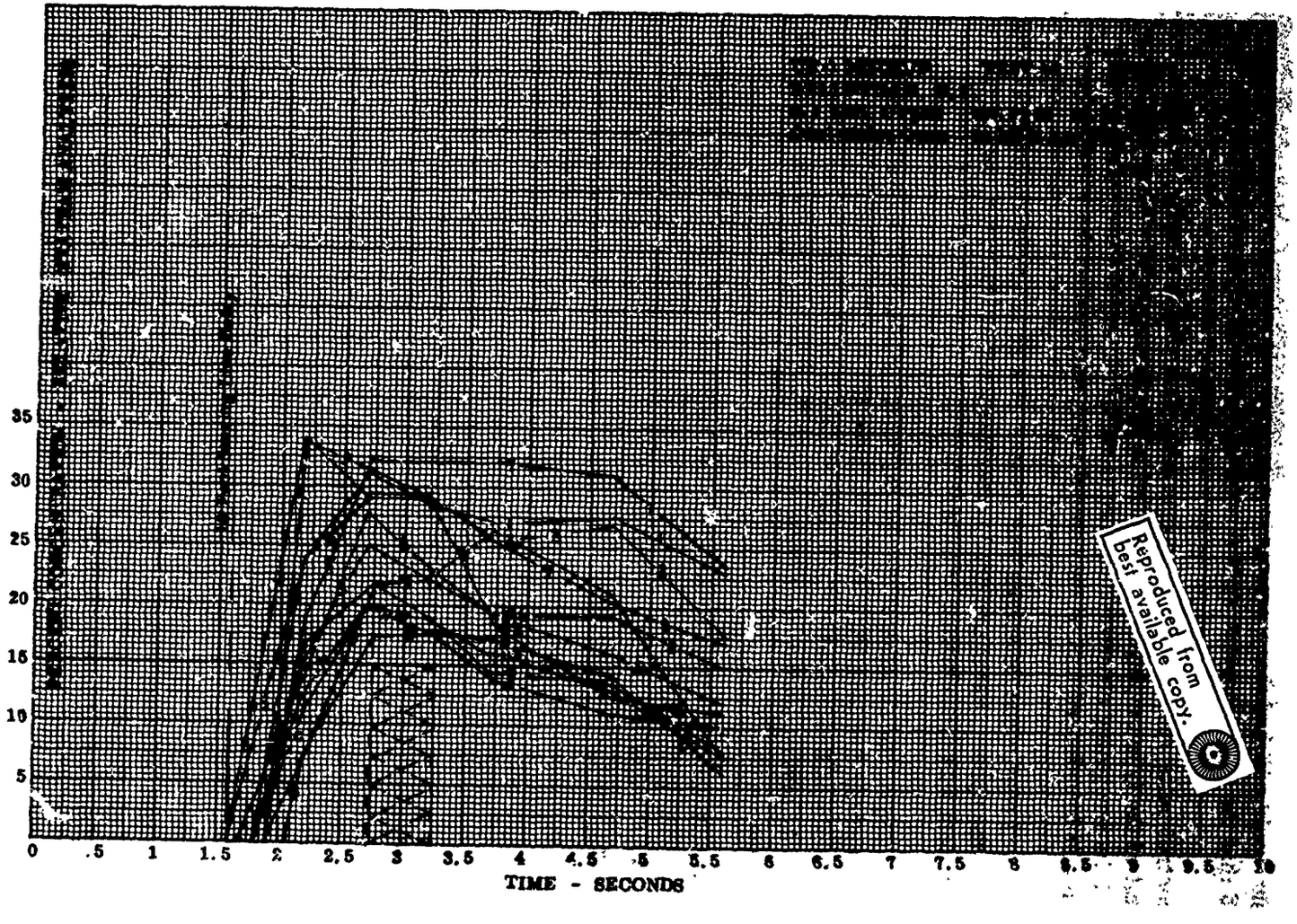

Reproduced from best available copy.

Figure 23. Agent Concentration Plot - 80 mph Airflow.

It was established in the initial series of tests that the shaft housing mounted element would respond more rapidly to a centrally located small fire and confirmed that the side elements were more rapid with the noncentered fires.

Two control units were used. When operating as a single system, a simple control unit of the type employed on the DC-9 aircraft was used. When employing the self-interrogating circuitry, the two parallel elements were monitored by the original breadboard unit of the control being supplied on the F-15 aircraft.

Each pair of continuous detectors was treated as a separate independent system, and since the upper system provided better response to the fires, use of the lower system was discontinued after test No. 5.

Figure 24 shows the location of the optical detector heads. Two units, one in either end of the fire area, were used in these tests. These heads were monitored by a simplified network which matched the cell's output to the self-interrogating control designed to measure the thermistor resistance change of a continuous element.

An additional optical cell was monitored by the manufacturer's control unit. Since this unit provided a more rapid and steady response, the control circuitry was revised to convert the 28-volt output signal from the two controls to a level suitable for input of the self-interrogating unit.

Engine Compartment Fire Tests

The fuel was JP-4, and several types of fires were used alone and in combination as follows:

.75 sq ft pan fire
3 sq ft pan fire
2-1/2 gpm spray fire
2-1/2 gpm spray with .75 sq ft pan
2-1/2 gpm spray with 3 sq ft pan

The spray was delivered from a standard oil burner nozzle assembled with spider and electrodes. Ignition was provided by a spark with the high voltage delivered from an oil burner transformer. The pan fires were ignited with a short burst of spray.

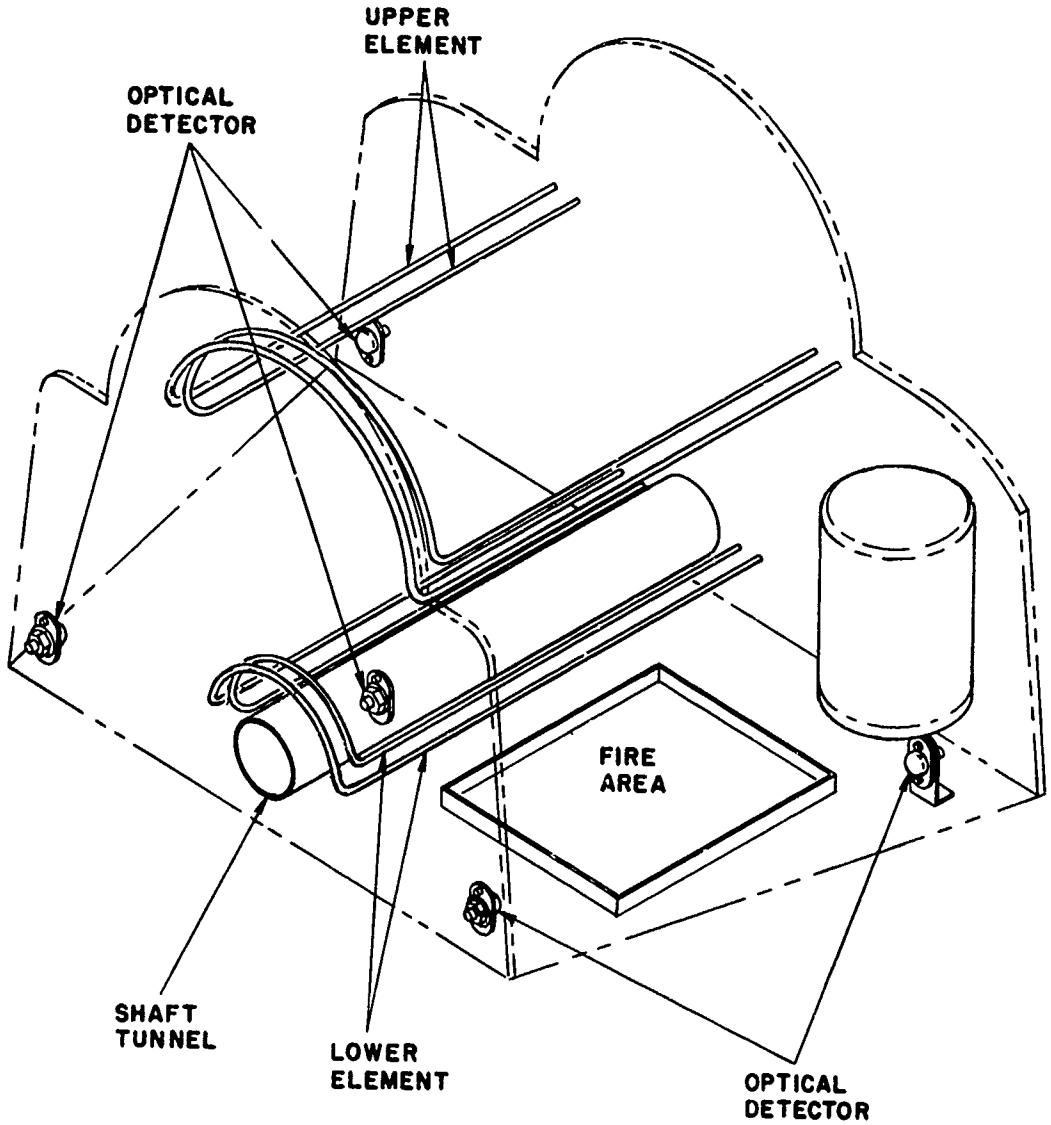

Figure 24. Fire Detector.

JP-4 fuel was delivered to the nozzle from a pressurized container, and the fuel flow was controlled by a solenoid valve.

In addition to the Halon system, the engine compartment was fitted for safety with a backup fire extinguishing system consisting of a cylinder containing 75 pounds of CO_2 fitted with a solenoid control. This system could be operated from the control station and for convenience was used in some of the early detection tests rather than the automatic Halon systems.

All tests were filmed on 16 mm color motion pictures. This provided a film record of the tests and was also the major data recording means. Results of the tests are summarized in Table IV.

Tests 1 through 5 were conducted to examine response time under varying fire conditions and to check the function of the controls and indication circuits. The backup CO_2 fire extinguishing system was used to extinguish the fires.

Test 6 introduced the automatically initiated extinguishing system triggered by the continuous detector, and was rerun as 6A when the camera was inadvertently stopped just prior to operation and extinguishing in test 6.

Tests 7 and 8 evidenced considerable intermittent operation of the detectors. At the conclusion of these tests, the interrogating control was returned to the lab for examination and troubleshooting. This control was a breadboard unit which had seen much modification and test. It was necessary to replace several hybrid circuits and transistors, following which its function was satisfactory.

Test 9 was considered incomplete; it was stopped when no alarm had been received after 46 seconds and was rerun as 9A. This test, and test 10 were run with only a .75 sq ft pan fire. It had been intended that they also have the fuel spray, but the spray was cut in each case after ignition due to a misunderstanding by the technician at the switch. The continuous detector in 9A responded in 39.4 seconds, automatically initiating the extinguishing sequence and extinguishing the fire. In test 10, the optical detector responded and the fire was extinguished in 4.9 seconds. This test pointed up the need for a latching relay or solenoid on the vent system to hold the close signal. Extinguishing and clearing took place so rapidly after detection that the vent closing mechanism had not responded before the fire alarm cleared, removing the vent close signal.

Tests 11, 12 and 13 were conducted to demonstrate the proper function of the self-interrogating control unit with one of the paired sensors disabled. Test 11 had one of the pair of continuous elements shorted; however, no action took place since the other element checked good when automatically interrogated by the control unit. The alarm was given when the good element responded to the fire, at which time the extinguishing system functioned.

TABLE IV. ENGINE FIRE TEST SUMMARY

Test No.	Fire Type	Detector	Extinguisher	Results and Comments
P	Pan and Spray	None	CO_2 Portable	Preliminary explorations.
1	.75 sq ft Pan	All independent	Manual CO_2	Optical 2.5 sec. Continuous upper 30 sec.
2	2-1/2 gpm Spray	All independent	Manual CO_2	Optical .5 sec. Continuous upper 30 sec.
3	3 sq ft Pan	All independent	Manual CO_2	Optical 25 sec. Continuous upper 9 sec. Continuous lower 15.5 sec.
3A	Same as 3 above	Same as 3 above	Same as 3 above	Optical .5 sec. Continuous 12.4 sec. For this and subsequent test, airflow starts before ignition.
4	3 sq ft Pan and 2-1/2 gpm Spray	All independent	Manual CO_2	Optical .25 sec. Continuous upper 9.2 sec.
5	.75 sq ft Pan	Continuous lower	Manual CO_2	Pan centered, response in 15.8 sec.

TABLE IV. ENGINE FIRE TEST SUMMARY (Continued)

Test No.	Fire Type	Detector	Extinguisher	Results and Comments
6	3 sq ft Pan and 2-1/2 gpm Spray	Continuous dual automatic	Automatic CF_3Br	Intermittent indication from both elements after 6.5 sec; camera off at 12.5 sec. Automatic operation immediately thereafter.
6A	3 sq ft Pan and 2-1/2 gpm Spray	Continuous dual	Automatic CF_3Br	Intermittent indication from both elements after 8.9 sec; system functioned at 10 sec. Test terminated at 16.7 sec.
7	3 sq ft Pan and 2-1/2 gpm Spray	Optical	Automatic CF_3Br	No. 4 optical response in 5 sec. System functioned at 7 sec.
8	3 sq ft Pan and 2-1/2 gpm Spray	Continuous dual	Automatic CF_3Br	Continuous detectors responded in 9.5 sec. Failure to properly connect firing circuit made necessary use of CO_2 ext. at 20 sec.
9	-	-	-	-
9A	.75 sq ft Pan	Continuous dual	Single CF_3Br	Detected and extinguished in 39.4 sec.
10	.75 sq ft Pan	Optical dual	CF_3Br Single	At 4.9 sec, simultaneous indication both detectors, and system operation.

TABLE IV. ENGINE FIRE TEST SUMMARY (Continued)

Test No.	Fire Type	Detector	Extinguisher	Results and Comments
11	.75 sq ft Pan	Dual continuous shorted	CF_3Br Single	Film record incomplete. Exact time unknown. System did function.
12 12A 13	NO FILM RECORD --- TEST RERUN			
12B	3 sq ft Pan and 2-1/2 gpm Spray	Continuous 1 element open	Single CF_3Br	Satisfactory system operation at 17.4 sec.
13A	3 sq ft Pan and 2-1/2 gpm Spray	Optical one cell discon-nected	Single CF_3Br	System responded 28 sec; fire extinguished.
14	3 sq ft Pan and 2-1/2 gpm Spray	Dual optical	Dual CF_3Br	One optical indication intermittent from 6 sec to 16.7 sec when terminated.
14A	3 sq ft Pan and 2-1/2 gpm Spray	Dual optical	Dual CF_3Br	No test.

TABLE IV. ENGINE FIRE TEST SUMMARY (Continued)

14B	3 sq ft Pan and 2-1/2 gpm Spray	Dual optical	Single CF_3Br	System operated 3.2 sec.
15	3 sq ft Pan and 2-1/2 gpm Spray	Dual continuous	Dual CF_3Br	System operated 21 sec. Reserve system 122.5 sec later.
		SENSOR WIRES REMOVED FROM CABLE		
15A	-	-	-	No fire - igniter problem.
15B	3 sq ft Pan and 2-1/2 gpm Spray	Dual optical	Dual CF_3Br	First indication 21 sec. System operation 34 sec. Reserve shot 65 sec later.
16A	3 sq ft Pan and 2-1/2 gpm Spray	Dual continuous	Dual CF_3Br	First element 11 sec. Ext. 12.5 sec. Clear 17.5 sec. Reserve 86 sec after first.
17	3 sq ft Pan and 2-1/2 gpm Spray	Dual* optical	Dual CF_3Br	First sensor .2 sec. Ext .4 sec. Clear .8 sec. Reserve shot 156+ sec later.
18	3 sq ft Pan and 2-1/2 gpm Spray	Dual* optical	Single CF_3Br	Ignition and extinguishment viewed through 3-inch hole in cowl from ignition to ext .5 sec.

*2 Dual optical units monitored by interrogating control.

Test 12 was conducted with one element open in order to establish that the self-interrogating control would function under this condition. When control received an alarm from only one element, it automatically tested the second element; when this element was shown to be defective (open), the fire signal was given and the system functioned.

In test 13, the optical system employing a self-interrogating control was tested with one detector head disconnected, and it too functioned satisfactorily.

In the following tests, 14 through 18, main and reserve extinguishing systems were used, and the ventilation air shutoff system was deactivated in order to allow rapid dissipation of the agent from the first shot and permit reignition in a reasonable period.

Test 14 employed dual optical detectors and a main and reserve extinguishing system. This test revealed that the optical detector circuits were not functioning properly.

Test 15 employed dual continuous elements in an interrogating circuit with dual extinguishers in a main and reserve configuration as depicted in Figure 6. In this test, initial system operation took place at 21 seconds with the reserve system discharging 122.5 seconds later. Because of some intermittent responses in the element circuits, the wiring to the test compartment was changed to separate the element leads from the cable bundle.

In test 15A, ignition did not occur due to carbon buildup on the ignitor insulators, causing arcing to take place away from the fuel spray. After cleaning the insulators, test 15B was run. In an effort to determine if the rerouting of the wiring would also resolve the problem (intermittent operation of the optical units), optical detectors were used in 15B. Initial system operation took place in 21 seconds and reserve 65 seconds later, indicating this was not the correction necessary for the optical system. The problem was corrected by obtaining the manufacturer's control units to replace the simplified routing circuits.

Test 16A employed dual continuous detectors with an interrogating control circuit with main and reserve extinguishers. Within 11 seconds of ignition circuit activation, the first element responded with a signal; at 12.5 seconds the other element light was activated along with the first fire bottle. At 20 seconds all systems were cleared, and when reignition took place, the elements responded in the same order, firing the reserve bottle at 98.5 seconds after original ignition.

Test 17 employed dual optical detectors in an interrogating circuit with the extinguisher system set up as a main and reserve system as illustrated in Figure 9. The first detector responded within 0.2 second of the throwing of the ignition

switch. The second detector indicated at 0.4 second, simultaneously operating the initial extinguisher bottle. Both detectors had cleared by 0.8 second. It was approximately 2.5 minutes before reignition was indicated by the fire warning light (there was no visual evidence of flame). Response was almost instantaneous, and the fire was extinguished by the reserve extinguisher.

The detailed sequence of events for tests 16A and 17 is shown in Table V.

In the case of the optical detector, an automatic operation of the sequence of detection and extinguishing was so rapid that there was no visible evidence of fire. Test 18 was run to confirm the presence of fire. A 3-inch hole was cut in the cowl and the camera focused on the electrodes. In addition to the arcing at the tips of the electrode, sparks were jumping on the holder due to carbon build-up. When fuel spray started, ignition and the resulting fire were easily discernible and the fire was completely extinguished in 0.5 second. The test used a dual optical detector in the interrogating circuit with automatic operation of a single extinguisher.

OIL COOLER COMPARTMENT

A 1600 cfm fan was installed in this compartment to duplicate the oil cooler fan. The protection system shown in Figure 10 consisted of two optical detectors which upon sighting a fire would automatically fire an extinguisher bottle and remove power from the fan and stop the fuel flow, simulating operation of a by-pass valve. The extinguisher was one of the 86 cu in. units used in the engine.

The test setup is shown in Figures 25 and 26. The 3-square-foot pan was placed in the compartment with a 5-gpm fuel nozzle.

MIL-L-23699 oil was used as the fuel, and preliminary tests indicated that it would not ignite even in the spray pattern issuing from the nozzle. A highly flammable JP-4 soaked paper towel was introduced into the pan of MIL-L-23699 lubricating oil adjacent to the spark gap and directly in the oil spray, and a highly satisfactory fire resulted.

The test was initiated with the fan started and allowed to come up to speed. The ignition circuit was activated, and fire started. The system sensed the fire and the fuel spray was cut off automatically as was the fan power; simultaneously, the extinguisher was fired and the fire was extinguished.

TABLE V. TIMED SEQUENCE OF EVENTS (ENGINE COMPARTMENT)

Test No.	Time (sec)	Action
16A	8	Ignition and fuel spray initiated
	19	Alarm from one element A
	20.5	Alarm from second element B Close vent signal (No closing,vent system intentionally disabled) First fire extinguished
	25.5	B element cleared
	28.5	A element cleared
	105	A element alarm
	106.5	B element alarm Reserve fire extinguisher fired
	112	B element cleared
	113.5	A element cleared
17	12.2	Fuel on
	12.3	Ignition
	12.5	Alarm from A detector
	12.7	Alarm from B detector Close vent signal (No closing vent intentionally disabled) First extinguisher fired
	13	A detector cleared
	13.1	B detector cleared
	170+	A detector alarm
	170+ (+.1)	B detector alarm Reserve extinguisher fired
	170+ (+.3)	A and B detectors cleared

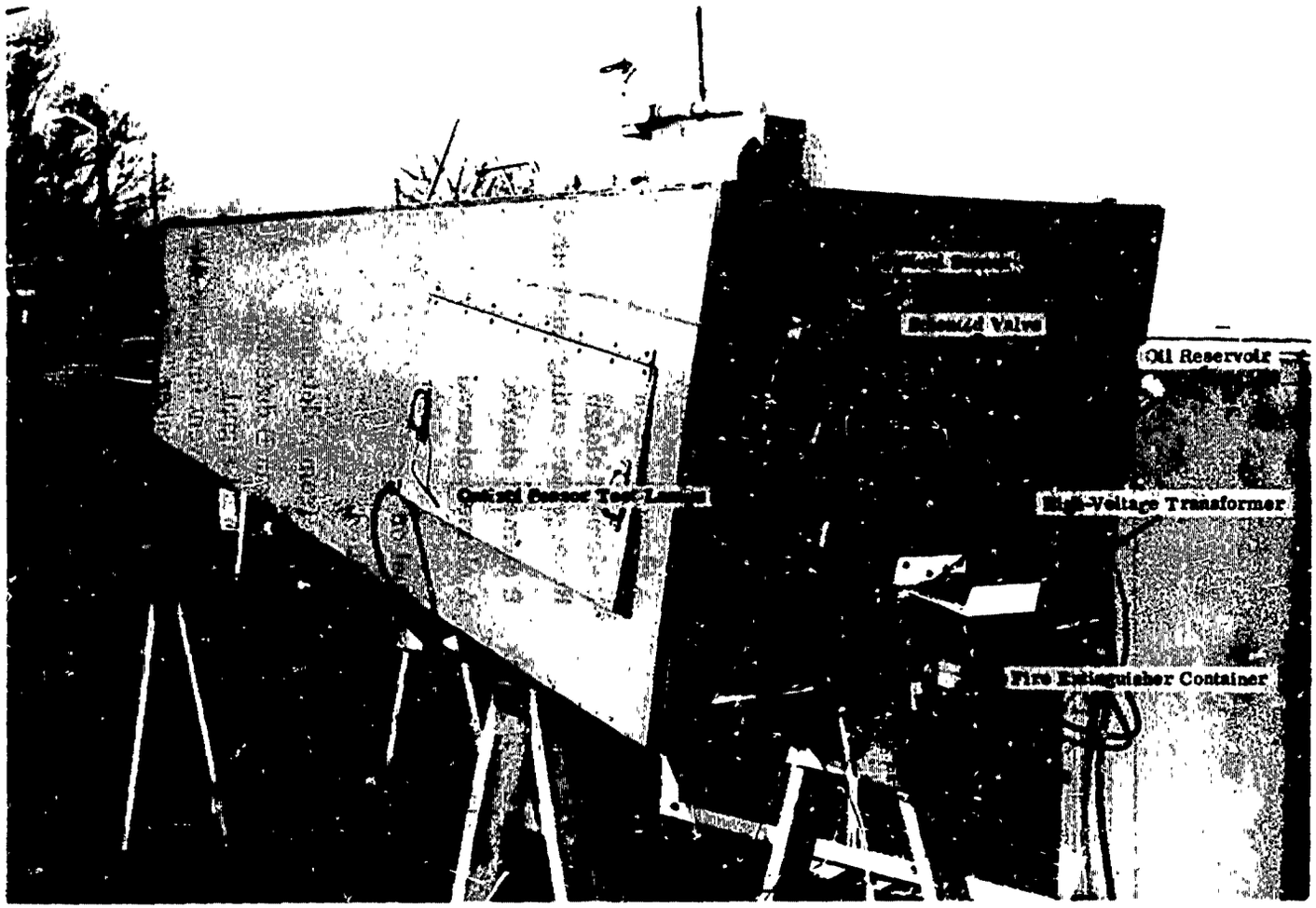

Figure 25. Oil Cooler Compartment - External View.

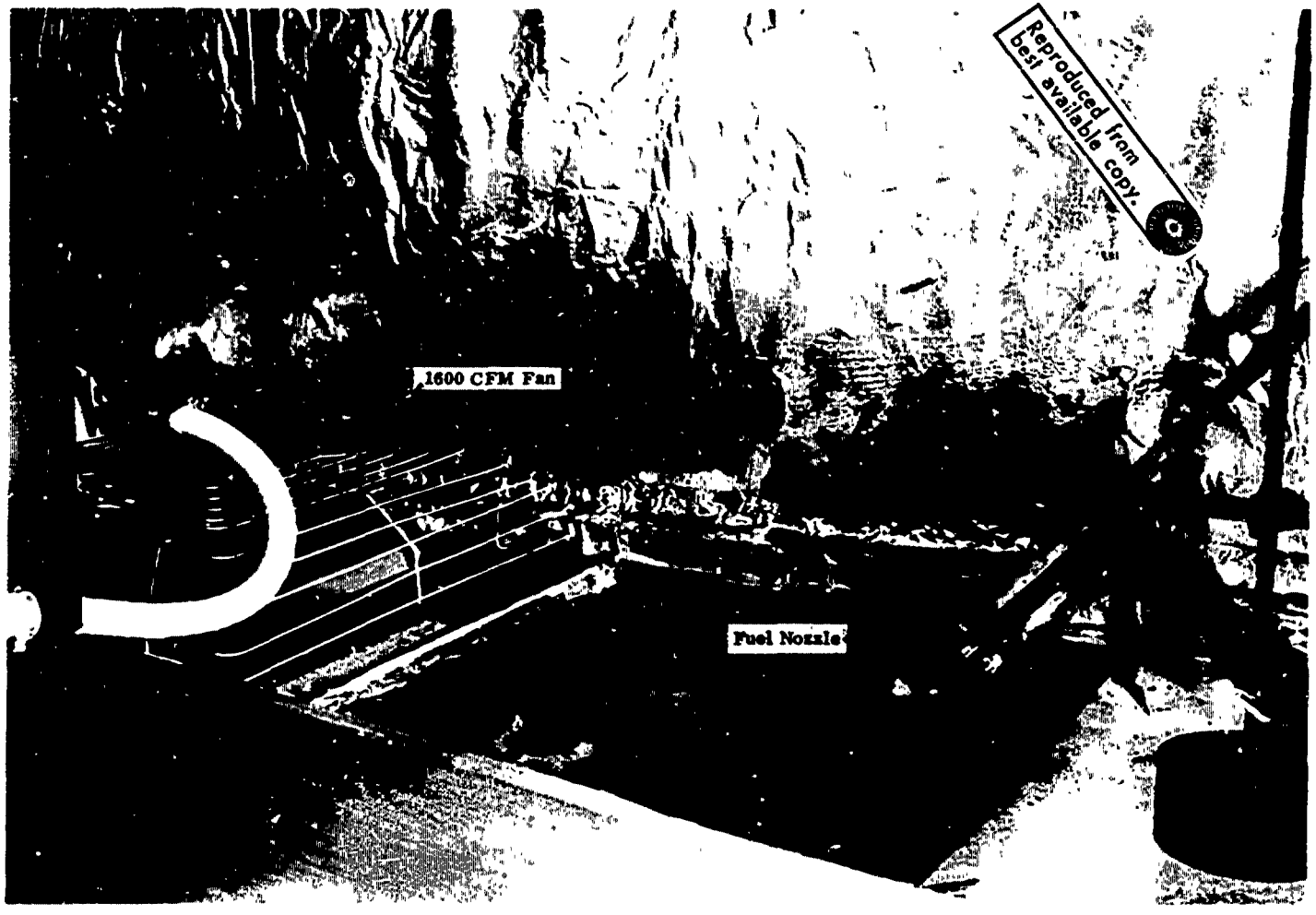

Reproduced from best available copy.

Figure 26. Oil Cooler Compartment - Internal View.

ELECTRONIC COMPARTMENT

Test 20 was that of the electronic compartment. The simulated compartment is shown in Figure 27. A smoke detector was installed on the upper surface. The initial smoke generator was a small soldering iron with rubber insulating material placed on the tip. The amount of smoke generated from this was exceedingly light, so a hot plate was installed in the bottom of the compartment and adequate smoke was generated by placing paper towels saturated with MIL-L-23699 turbine oil directly on the hot plate surface. In this system, the interface unit (upon receipt of an alarm from the smoke detector) lighted an indicator light and removed power from the section — no extinguisher was used since the type of fire encountered would be self-extinguishing once power was removed. This system is shown in Figure 14.

Two indicator lights were used — one normally off came on when the smoke detector alarmed (smoke detector light), and the other normally on, indicating power on, went off upon alarm, indicating "power off".

This test represented a functional test of this setup. The smoke detector sensed the smoke, and all systems operated satisfactorily.

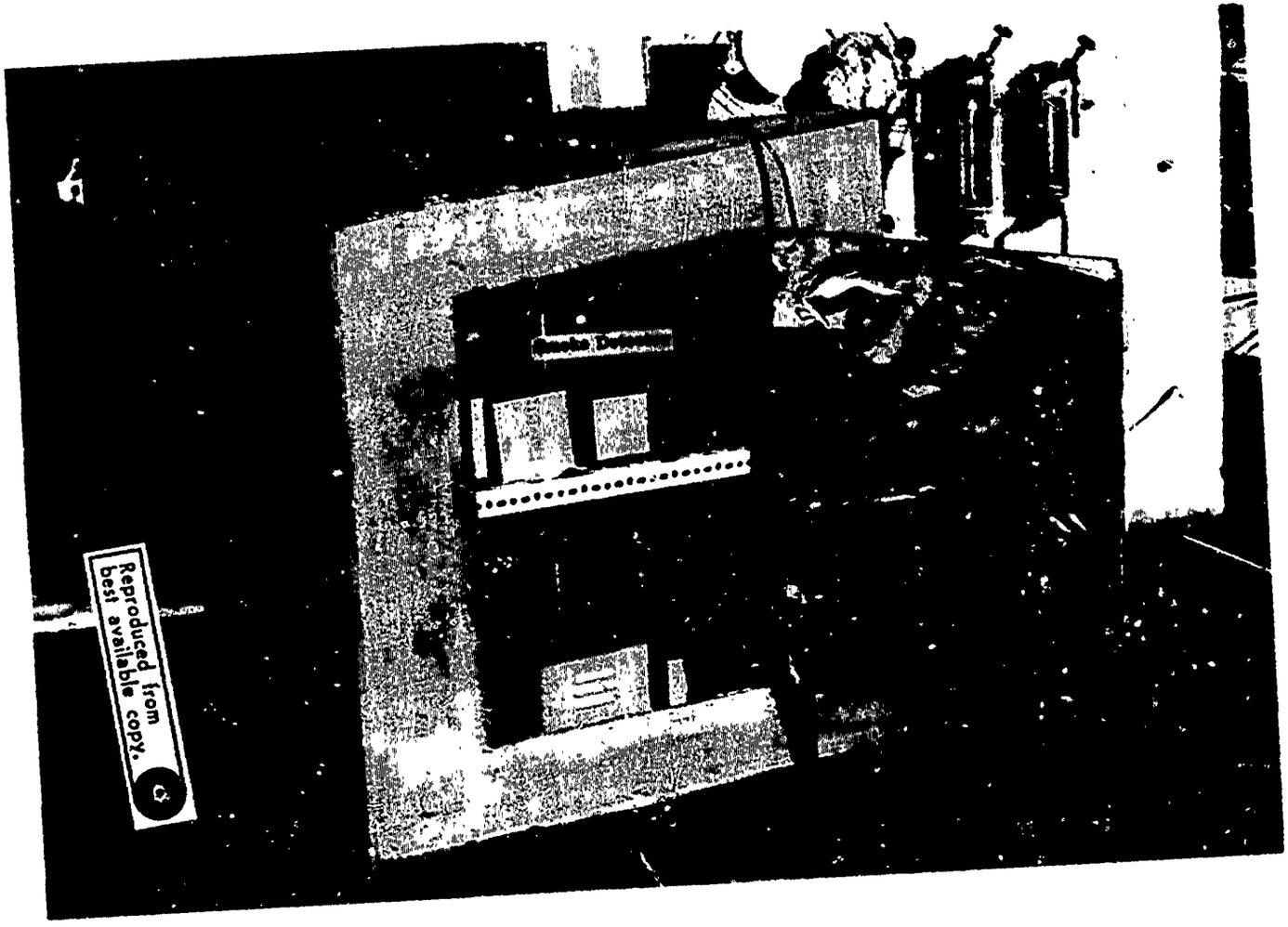

Reproduced from best available copy.

Figure 27. Electronic Compartment.

CONCLUSIONS

It is completely practical to combine existing fire detection and extinguishing equipment with state-of-the-art interface units into an effective automatic fire suppression system for Army rotary-wing aircraft.

The interrogating system which employs sensors in pairs and responds only if both sensors indicate fire or if one sensor indicates fire and the other indicates a fault can provide a margin in reliability which makes a fully automatic system practical.

In the event of a fire in the engine space, continued operation for periods up to several minutes may be gained by the use of an automatic suppression system. This period may be doubled by the addition of a reserve system. More extended operation can be gained by providing a means to control the flow of ventilation air into the compartment.

The oil cooler compartment presents much less of a hazard than the engine space. If fuel drainage in the engine space above it were adequate to prevent leaking fuel from getting into this compartment, this space might not be considered as an area needing protection since the high (475°F) flash point of the oil makes ignition highly unlikely. The use of dual outlet containers for the engine space extinguishing system, coupled with the addition of a detector in the oil cooler compartment would, however, allow coverage in this space with minimum cost and weight impact.

The test of the smoke detector in the electronics bay indicated that considerable smoke was necessary to activate the system. However, the hazard is one in which voluminous generation of smoke would precede any other indication of fire such as heat or visual evidence of flame. We therefore confirm the suitability of this means for this hazard. We do not, however, feel that the performance record would warrant its installation.

It is believed that the problem of battery fires can be resolved by steps outlined in a recent FAA Airworthiness Directive. This directive requires very close inspection until all polystyrene cased cells have been replaced or suitable temperature sensing and disconnect or charging rate control procedures have been instituted.

Those fires in crew-accessible spaces may be detected by the crew and proper steps taken to remove power and if necessary use portable extinguishing equipment to extinguish the fire.

RECOMMENDATIONS

It is recommended that at the very minimum, an Automatic Fire Detection and Suppression System be provided in the engine space of the UH-1 aircraft. The optimum system from a suppression standpoint would be one in which airflow could be minimized. However, from a practical point of view, a main and reserve system in the engine space might provide enough time for the pilot to land safely.

It is recommended that further tests be run with an actual engine compartment.

A dual system with a self-interrogating control would provide the high order of reliability against both false and no-alarm conditions. A continuous thermal detector, or a visual detector with a more positive integrity test, could be used as the sensor.

It is recommended that the possible drainage of fuel from the engine to the oil cooler compartment be corrected or that an automatic detection and suppression system be provided in this space.

It is not recommended that a system be provided for the electrical compartment.

We suggest careful review of the results obtained with self-sealing crash resistant fuel cells to determine if the fuel cells and space surrounding them need be protected.

It is recommended that the problem of battery fires be corrected by direct preventive means rather than an automatic fire detection and suppression system.

LITERATURE CITED

1. Pedriani, Charles M., A STUDY OF THE FUEL/AIR VAPOR CHARACTERISTICS IN THE ULLAGE OF AIRCRAFT FUEL TANKS, U. S. Army Aviation Materiel Laboratories, TN3, Fort Eustis, Virginia, June 1970, AD 873252.

2. Nestor, L. J., INVESTIGATION OF TURBINE FUEL FLAMMABILITY WITHIN AIRCRAFT FUEL TANKS, Naval Air Propulsion Test Center, Philadelphia, Pa., PS-67-7, July 1967, AD 669001.

3. Klueg, Eugene P., IN FLIGHT CONTROL OF POWERPLANT FIRES WITH LIQUID NITROGEN, Second Conference on Fuel System Fire Safety Report of Conference, Federal Aviation Administration, 6 and 7 May 1970, page 122.

4. Rolle, Stephen H., REPORT OF FAA INDUSTRY ADVISORY COMMITTEE ON FUEL SYSTEM FIRE SAFETY, Second Conference on Fuel System Fire Safety Report of Conference, Federal Aviation Administration, 6 and 7 May 1970, page 10.

5. Business Pilot's Safety Bulletin, 71-209, Flight Safety Foundation, Inc., 1800 N. Kent St., Arlington, Va.

SELECTED BIBLIOGRAPHY

AN INVESTIGATION OF IN-FLIGHT FIRE PROTECTION WITH A TURBOFAN POWERPLANT INSTALLATION, FAA National Aviation Facilities Experimental Center, Report NA-69-26, April 1969.

Custard, G.H., et. al., AIRCRAFT FUEL CELL EXPLOSION SUPPRESSION SYSTEMS AND THEIR APPLICABILITY TO ARMY AIRCRAFT, Falcon Research and Development Company, Denver, Colorado; U.S. Army Aviation Material Laboratories, Fort Eustis, Virginia, TR 67-39, July 1967, AD 824028.

Federal Aviation Agency Technical Standard Order C1b Cargo and Baggage Compartment Smoke Detection Instruments, March 24, 1967.

Federal Aviation Agency Technical Standard Order C11d, Subject Fire Detectors, August 30, 1961.

Federal Aviation Agency Technical Standard Order C-79 Fire Detectors (Radiation Sensing Type), November 12, 1963.

FIRE EXTINGUISHMENT IN AIRCRAFT VOID SPACES, Fenwal, Inc., (for BRL), August 1969, AD 504144.

Hansberry, H. L., AIRCRAFT FIRE PROTECTION DEVELOPMENTS BY THE FEDERAL AVIATION ADMINISTRATION (1940-1970), ASME Paper 70-GT-109, May 1970, 24-28.

Kuchta, J.M., et. al., EVALUATION OF FLAME ARRESTOR MATERIALS FOR AIRCRAFT FUEL SYSTEMS, Bureau of Mines; Air Force Aero Propulsion Laboratory, TR-67-148, February 1968, AD 828014.

Kuchta, J.M., et. al., FUEL TANK EXPLOSION SUPPRESSION, Bureau of Mines; Air Force Aero Propulsion Laboratory, TR-69-11, March 1969, AD 849701.

Kuchta, J.M., et. al., FLAME ARRESTOR MATERIALS FOR FUEL TANK EXPLOSION PROTECTION, Bureau of Mines; Air For Aero Propulsion Laboratories, TR-70-40, July 1970.

Metcalf, J.W., et. al., PROTECTION OF AIRCRAFT FLUID SYSTEMS, LTV Aerospace Corporation; Air Force Materials Laboratory, TR-68-125, April 1968.

SELECTED BIBLIOGRAPHY (Cont)

Military Specification MIL-C-22284A (Wp), Container, Aircraft Fire Extinguishing System, Bromotrifluoromethane, CF_3Br, 7 September 1965.

Military Specification MIL-D-27729A (USAF), Detecting Systems, Flame and Smoke, Aircraft and Aerospace Vehicle, General Performance, Installation and Test of, 25 June 1963.

Military Specification MIL-D-7599 (WAF), Detector, Overheat, Adjustable, 149°C to 399°C Range, Type E-2, 10 November 1952.

Military Specification MIL-E-22285 (WEP), Extinguishing System, Fire, Aircraft, High-Rate-Discharge Type, Installation and Test of, 27 April 1960 (Amend. 1).

Military Specification MIL-E-52031, Extinguisher, Fire, Vaporizing Liquid, CF_3Br, 2-3/4 pound with Bracket, 2 January 1968.

Military Specification MIL-F-23447 (WEP), Fire Warning Systems, Aircraft, Radiation Sensing Type, Test and Installation of, 14 September 1962.

Military Specification MIL-F-7872 (ASG) Fire and Overheat Warning Systems, Continuous Aircraft: Test and Installation of, 18 November 1966.

Nestor, L.J., INVESTIGATION OF TURBINE FUEL FLAMMABILITY WITHIN AIRCRAFT FUEL TANKS, Naval Air Propulsion Test Center, Philadelphia, Pa., DS 67-7, July 1967, AD 669001.

N.F.P.A. Quarterly, October 1957.

Pedriani, Charles M., A STUDY OF THE FUEL/AIR VAPOR CHARACTERISTICS IN THE ULLAGE OF AIRCRAFT FUEL TANKS, U. S. Army Aviation Materiel Laboratories, TN3, Fort Eustis, Virginia, June 1970, AD 873252.

Reed, Thomas D., USAF EXPERIENCE WITH POLYURETHANE FOAM INERTING MATERIAL, ASD, Directorate of Propulsion and Power, ASNJ1-70-2, May 1970.

SECOND CONFERENCE ON FUEL SYSTEM FIRE SAFETY, Report of Conference, 6 and 7 May 1970.

Technical Development Report No. 260, CAA Technical Development and Evaluation Center, Indianapolis, February 1956.

SELECTED BIBLIOGRAPHY (Cont)

Thibodeau, J.E., FUEL FIRE PROTECTION DEVICE FOR SMALL HEI PROJECTILE THREAT, Goodyear Tire and Rubber Company, Aviation Products Division; August 1969 (19-607), AD 859970.