AFHRL-TR-71-53
VOLUME III

AD 744817

FULLY PROCEDURALIZED JOB PERFORMANCE AIDS

VOLUME III — JPA MANAGER'S HANDBOOK

REID P. JOYCE
JOHN D. FOLLEY, JR.
THOMAS K. ELLIOTT

APPLIED SCIENCE ASSOCIATES, INC.

TECHNICAL REPORT AFHRL-TR-71-53
VOLUME III

D D C
RECEIVED
JUL 14 1972
B

DECEMBER 1971

Approved for public release; distribution unlimited.

AIR FORCE HUMAN RESOURCES LABORATORY
AIR FORCE SYSTEMS COMMAND
BROOKS AIR FORCE BASE, TEXAS

NOTICE

When Government drawings, specifications, or other data are used for any purpose other than in connection with a definitely related Government procurement operation, the United States Government thereby incurs no responsibility nor any obligation whatsoever; and the fact that the government may have formulated, furnished, or in any way supplied the said drawings, specifications, or other data, is not to be regarded by implication or otherwise as in any manner licensing the holder or any other person or corporation, or conveying any rights or permission to manufacture, use, or sell any patented invention that may in any way be related thereto.

ACCESSION for
WHITE SECTION
BUFF SECTION
JUSTIFICATION
BY
DISTRIBUTION/AVAILABILITY CODES
Dist. AVAIL. and/or SPECIAL
A

Copies of this report should not be returned unless return is required by security considerations, contractual obligations, or notice on a specific document.

UNCLASSIFIED
Security Classification

DOCUMENT CONTROL DATA - R & D

(Security classification of title, body of abstract and indexing annotation must be entered when the overall report is classified)

1. ORIGINATING ACTIVITY *(Corporate author)*

Applied Science Associates, Inc.
Valencia, Pennsylvania

2a. REPORT SECURITY CLASSIFICATION

UNCLASSIFIED

2b. GROUP

3. REPORT TITLE

FULLY PROCEDURALIZED JOB PERFORMANCE AIDS
VOLUME III - JPA MANAGER'S HANDBOOK

4. DESCRIPTIVE NOTES *(Type of report and inclusive dates)*

Final Report (September 1970 - December 1971)

5. AUTHOR(S) *(First name, middle initial, last name)*

Reid P. Joyce, John D. Folley, Jr., Thomas K. Elliott,

6. REPORT DATE

December 1971

7a. TOTAL NO. OF PAGES

76

7b. NO. OF REFS

8a. CONTRACT OR GRANT NO.

F33615-71-C-1644

b. PROJECT NO. 1127 1710

c. Task No. 1127 12 1710 04

d. Work Unit No. 1127 12 01

9a. ORIGINATOR'S REPORT NUMBER(S)

9b. OTHER REPORT NO(S) *(Any other numbers that may be assigned this report)*

AFHRL-TR-71-53
VOLUME III

10. DISTRIBUTION STATEMENT

Approved for public release; distribution unlimited.

11. SUPPLEMENTARY NOTES

12. SPONSORING MILITARY ACTIVITY

Aeronautical Systems Division and
Air Force Human Resources Laboratory
Wright-Patterson AFB, Ohio 45433

13. ABSTRACT

This report provides guidance for the Air Force Data Managers charged with the responsibility for the procurement of fully proceduralized JPAs. It provides guidelines, suggested procedures, and checklists for use by data managers in the review and assessment of the subproducts, intermediate products and JPAs produced in accordance with the draft specification contained in Volume I of this technical report.

Ia

DD FORM 1 NOV 65 1473

UNCLASSIFIED
Security Classification

UNCLASSIFIED
Security Classification

14 KEY WORDS	LINK A ROLE	LINK A WT	LINK B ROLE	LINK B WT	LINK C ROLE	LINK C WT
Job Performance Aids						
Task Analysis						
Troubleshooting Procedures						
Troubleshooting Aids						
Organizational Maintenance						
Technical Writing						

Ith

☆U.S.Government Printing Office: 1972 — 759-086/630

UNCLASSIFIED
Security Classification

AFHRL-TR-71-53
VOLUME III

FULLY PROCEDURALIZED JOB PERFORMANCE AIDS

VOLUME III — JPA MANAGER'S HANDBOOK

REID P. JOYCE
JOHN D. FOLLEY, JR.
THOMAS K. ELLIOTT

APPLIED SCIENCE ASSOCIATES, INC.

Approved for public release; distribution unlimited.

IC

FOREWORD

This report represents a consolidation of advances in the development of job performance aid (JPA) technology made by the Air Force Human Resources Laboratory under Project 1710 "Training for Advanced Air Force Systems" and under Project 1127 "Vietnamese Air Force (VNAF) Job Performance Aids". This three volume report provides a model specification and necessary guidance for multi-source procurement of fully proceduralized JPAs for organizational maintenance for use in future exploratory, advanced and engineering development efforts.

The guidance materials presented in this volume apply the findings of previous studies of performance aiding sponsored by the Advanced Systems Division under contracts AF33(615)-1137, AF33(615)-3699, F33615-68-C-1479, F33615-69-C-1527, and F33615-70-C-1500 with Applied Science Associates, Inc. of Valencia, Pa. The materials presented in this volume were adapted from the handbook, Handbook for JPA Data Managers on Review and Assessment of Advanced-Type Job Performance Aids Prepared to Mil-J-83302 which was developed by Applied Science Associates, Inc. under contract F33615-71-C-1644 with the Aeronautical Systems Division (Project 1127). The handbook presented in this volume differs from the original handbook in that procedures for the review and assessment of troubleshooting aids and for the translation of the JPAs into Vietnamese have been deleted. Work on the handbook was begun in May 1971 and completed in August 1971. Work on the adaption of the handbook was begun in December 1971 and completed in February 1972.

Dr. John D. Folley, Jr. of Applied Science Associates, Inc. was the Principal Investigator. Mr. Reid P. Joyce was the Project Director. Dr. John P. Foley, Jr. of the Advanced Systems Division was the Task Scientist. Major Jay B. Day of the Aeronautical Systems Division was the Contract Monitor. The handbook was adapted for this report by Dr. Donald L. Thomas of the Advanced Systems Division.

The report was submitted by the authors in December 1971.

The technical report has been reviewed and approved.

GORDON A. ECKSTRAND, PhD
Chief, Advanced Systems Division
Air Force Human Resources Laboratory

ABSTRACT

This report provides guidance for the Air Force Data Managers charged with the responsibility for the procurement of fully proceduralized JPAs. It provides guidelines, suggested procedures, and checklists for use by data managers in the review and assessment of the subproducts, intermediate products and JPAs produced in accordance with the draft specification contained in Volume I of this technical report.

SUMMARY AND CONCLUSIONS

PROBLEM:

A series of research efforts conducted by the Air Force Human Resources Laboratory has resulted in the development of a new type of maintenance data known as fully proceduralized job performance aids (JPAs). Available evidence suggests that application of fully proceduralized JPAs to the maintenance of Air Force Systems will significantly increase maintenance effectiveness. A well defined technology has been developed for the preparation of fully proceduralized JPAs. The techniques for producing JPAs differ significantly from the techniques used to develop conventional technical orders. Since relatively few fully proceduralized JPAs have been developed, few people have been trained in the technology. A method was needed to increase this capacity and to provide Air Force personnel with the knowledge necessary to effectively monitor JPA procurement.

APPROACH AND RESULTS:

As an approach to this problem, the materials presented in this three volume technical report were developed. They provide specifications and guidance for the development and procurement of fully proceduralized JPAs. Volume I provides a draft specification for the procurement of JPAs, Volume II provides guidance for JPA developers, and Volume III provides guidance for Air Force data managers charged with the responsibility for the procurement of JPAs.

The present volume, Volume III, provides guidance for Air Force Data Managers. It provides guidelines, suggested procedures, and checklists for use in the review and assessment of the subproducts, intermediate products and final products produced in accordance with the draft specification (Volume I).

CONCLUSIONS:

The handbook provides basic procedures for use by Air Force Data Managers in monitoring the production of fully proceduralized JPAs.

Determining the adequacy of the products produced in accordance with the specification requires a judgement on the part of the data manager. This handbook does not eliminate the requirement for application of that judgement. However, it does offer methods for making the judgements systematically and with minimum error.

This summary was prepared by Donald L. Thomas, Training Technology Branch, Advanced Systems Division, Air Force Human Resources Laboratory.

TABLE OF CONTENTS

Section		Page
I	INTRODUCTION AND ORIENTATION TO REVIEW AND ASSESSMENT OF JPA MATERIAL	
	1.1 Introduction	1
	1.2 Orientation to the Review/Assessment Process	5
II	OVERALL MANAGEMENT OF THE JPA REVIEW/ASSESSMENT PROCESS	8
	2.1 General	8
	2.2 Advance Preparation	9
	2.3 Planning and Recordkeeping	9
	2.4 Some Basic Concepts in JPA Assessment	13
	2.5 Summary	14
III	MAINTENANCE TASK ANALYSIS	16
	3.1 Task Analysis Assessment Overview	16
	3.2 Personnel Recommendations	17
	3.3 Task Identification Matrix Assessment	17
	3.4 Task Inventory Assessment	21
	3.5 Task Step Data Details Assessment	22
	3.6 Test Equipment and Tool Use Form Assessment	24
	3.7 Task Description Index and Management Matrix Assessment	26
	3.8 Task Analysis Assessment Summary Checklist	29
IV	JOB GUIDES	31
	4.1 Job Guide Assessment Overview	31
	4.2 Preliminary Format and Content Review--Assessment of Contractor Review	31
	4.3 Job Guide Validation	40
	4.4 Post Validation Coverage Check	43
	4.5 Maintenance Instruction Manuals	44
	4.6 Index to Job Guides	45
	4.7 Inspection Guidelines Manual	47
	4.8 Maintenance Support Information Manual	49
	4.9 Job Guide Assessment Summary Checklist	50
V	FULLY PROCEDURALIZED TROUBLESHOOTING AIDS	52
	5.1 Fully Proceduralized Troubleshooting Aids Assessment Overview	52
	5.2 List of Components and Failure Modes	53
	5.3 List of Functions and Function Failures	54
	5.4 Indications of Function Failures (Function Failure by Control and Display Matrix)	55
	5.5 List of Malfunction Symptoms	56
	5.6 Component Block Diagram	57
	5.7 Action Trees	59

TABLE OF CONTENTS (continued)

Section		Page
V	5.8 Readings and Tolerances (Action Tree Validation)	61
	5.9 Fully Proceduralized Troubleshooting Aid Assessment Summary Checklist	62
	APPENDIX A. TIM CONTRACTOR VALIDATION PROCEDURE	64
	1. TIM Preparation	64
	2. New System TIM Validation	64
	3. Existing System TIM Validation	64
	4. Reconciling Differences Between Field Practice and the Draft TIM	66
	5. TIM Acceptance by Air Force JPA Manager	67
	ALPHABETICAL INDEX	68 - 76

LIST OF ILLUSTRATIONS

Number	Title	Page
1-1	JPA Development Process as Described in This Handbook	7
2-1	Sample Matrix of Projected Completion Dates for all Products	11
2-2	Sample Schedule of Product Completion Dates	12
3-1	Sample TIM Showing Correct Format	18
3-2	Task Analysis Assessment Summary Checklist	30
4-1	Examples of Proper and Improper Level of Detail for Locator Illustration	36
4-2	Examples of Adequate and Extraneous Detail in a Specific Illustration	37 - 39
4-3	Suggested Validation Observation Form	42
4-4	Comparison of the Index Manual with the Task Inventory	47
4-5	Comparison of IGM Task Listings With Inspection Workcard Task Listings	48
4-6	Job Guide Assessment Summary Checklist	51
5-1	Example of Transformation from Function Failure by Control and Display Matrix to the List of Malfunction Symptoms	58
5-2	Fully Proceduralized Troubleshooting Aid Assessment Summary Checklist	63

LIST OF TABLES

Number	Title	Page
1-1	JPA Products, Subproducts, and Intermediate Products	5
3-1	Types of Data Entries	28
4-1	Review Outline	32 - 34

LIST OF ABBREVIATIONS

AFHRL: Air Force Human Resources Laboratory

AMA: Air Materiel Area

APF: Activity Planning Form

FPTA: Fully Proceduralized Troubleshooting Aids

IGM: Inspection Guidelines Manual

IPB: Illustrated Parts Breakdown

IPR: In-Process Review

JPA: Job Performance Aids

LFS: List of Functional Segments

LFU: List of Functional Units

LRI: Line-Replaceable Item

MDC: Maintenance Dependency Chart

MIM: Maintenance Instruction Manual

MSIM: Maintenance Support Information Manual

R&T: Reading and Tolerance

SPO: System Program Office

TDIMM: Task Description Index and Management Matrix

TETUF: Test Equipment and Tool Use Form

TI: Task Inventory

TIM: Task Identification Matrix

TSDD: Task Step Data Details

SECTION I

INTRODUCTION AND ORIENTATION TO REVIEW AND ASSESSMENT OF JPA MATERIAL

1.1 INTRODUCTION

1.1.1 PURPOSE OF THIS HANDBOOK. The procedures used to develop fully proceduralized job performance aids (JPA) differ significantly from those used to prepare conventional technical orders. These procedures require the development of several subproducts and intermediate products. Since the quality of the JPA produced depends upon the quality of these products, it is essential that adequate procedures be used by Air Force data managers to assess their quality. This handbook has been developed to provide guidance and suggested procedures for reviewing and assessing the quality of the subproducts, intermediate products, and final products at each step of the JPA development process.

The handbook is designed for use in conjunction with Volumes I and II of this technical report. These volumes contain the following:

Volume I - Draft Specification for Organizational Maintenance. This volume presents a draft specification for the organizational maintenance of Air Force man-machine systems. It provides detailed requirements for the format and content of JPA and specifies that certain procedures be used in preparing the aids. The specification differs from most military specifications for maintenance data in that it requires that certain procedures be used and that certain subproducts be produced. The procedures and subproducts are required to insure that the contractor follows the JPA methodology and for use in updating the JPA when required.

Volume II - Developer's Handbook. This volume provides detailed instructions on the procedures used to develop fully proceduralized JPAs in accordance with the draft specification (Volume I). It is designed to serve as a basic guide for persons engaged in the preparation of fully proceduralized JPA and as a source book for personnel preparing programs to train personnel to prepare JPAs.

It is assumed that personnel using this handbook are thoroughly familiar with Volumes I and II and that a copy of Volume I is available for reference.

The materials presented in this handbook were adapted from the handbook, Handbook for JPA Managers on Review and Assessment of Advanced-Type Job Performance Aids Prepared to Mil-J-83302 (USAF). This handbook differs from the original handbook in that the requirements for the development of Troubleshooting decision aids and for the translation of the JPAs into Vietnamese have been deleted.

1.1.2 APPROACH OF THE HANDBOOK. Guidelines and suggested procedures are given in this handbook for Air Force JPA Managers, System Managers, or their representatives to use in review and assessment of Job Performance Aids (JPA) and related intermediate products. Throughout this handbook, the Air Force representative who is responsible for review and assessment of the contractor's work will be referred to as the JPA Manager. Determining conformance with this specification requires a substantial amount of judgment. This handbook does not eliminate the requirement for the application of that judgment. It does, however, offer methods for making the judgments systematically and with minimum error. Guidelines and suggestions are provided for all intermediate and final products that must be reviewed and assessed by the Air Force representative.

The body of the handbook prescribes what the JPA Manager ought to do in order to adequately assess the material he receives from the contractor. The appendixes contain guidance for contractor activities that the JPA Manager should require to be performed, and suggested contract provisions that will enable the Air Force to perform the kinds of reviews and assessments required.

This handbook assumes that its user has studied the draft specification (Volume I of this technical report) and Chapter 6 of AFSC Design Handbook DH 1-3. Therefore, basic concepts, definitions, and procedures are not included here except in summary form where required for clarity.

Because of the expected disparity in users' backgrounds, the handbook has been written at two levels of detail. For those experienced in the development and use of JPA products, checklists are provided with each chapter that pertains to a particular type of data. Detailed prescriptions for review and assessment are given for the user who is less familiar with JPA technology.

This handbook will be most useful to the JPA Manager if the procedure outlined here is followed. First, study the draft specification and the other specifications that it references. Second, study Chapter 6 of AFSC DH 1-3 which contains guidance to the contractor on how to prepare JPA in accordance with the draft specification. Third, study this assessment handbook. Overall knowledge of the processes and products as described in these documents will enable the JPA Manager to comprehend and keep track of what is happening during JPA development, and to discharge his responsibilities more effectively.

1.1.3 JPA MANAGER'S RESPONSIBILITIES AND OBJECTIVES. It is the responsibility of the JPA Manager to ensure, to the best of his ability, that the Air Force is getting the best quality JPA obtainable; JPA that meet the requirements of the specification and contract under which they are

being purchased. In fulfilling this responsibility, however, the JPA Manager is at a disadvantage compared with the contractor, whose personnel are deeply involved in and familiar with the system for which JPA are being developed. Furthermore, the contractor will have dozens or hundreds of people working on the project. The JPA Manager will essentially be working alone, except for occasional specialized technical assistance.

It is important, therefore, that the JPA Manager maintain control of the review and assessment process, and not give up that control to the contractor. This means that the JPA Manager must know at all times what the contractor is doing, what he plans to have completed at any point in time, and what is actually completed. On the other hand, the JPA Manager must not put himself in the position of doing the contractor's quality control work for him. The contractor must still be responsible for the completeness and accuracy of the final product, and for its on-time delivery.

The general approach to the review and assessment of intermediate products is directed toward assuring that the contractor is on the right track early in the process, and that he does not drift away from the approved approach. The JPA Manager thus checks on every aspect of the work after a relatively small sample has been prepared, and provides feedback to the contractor about what is right and what is wrong. Later, spot checks during production detect deviations from standard, and preverification acceptance checks appraise the products before they are given their final test.

1.1.4 DATA MANAGEMENT PHILOSOPHY FOR JPA. The philosophy of data management for JPA is different than for conventional Technical Orders. Generally, the review of Technical Orders takes place in verification. In JPA, checks on a number of specific intermediate products are required in order to maximize the probability that relatively few errors carry through to verification.

This philosophy is important to JPA technology, since errors in JPA have a much more pronounced effect on maintenance effectiveness than errors in conventional Technical Orders. Since JPA spell out, step-by-step, what the technician is to do on the job, any errors in those steps can result in an error in job performance.

Current policies encourage having as little data as possible delivered to the Air Force; only final products are to be delivered. Review and assessment of intermediate products and subproducts will generally be done at In-Process Reviews (IPR) at the contractor's plant. The JPA Manager should control the scheduling and content of these reviews as much as possible. He can strengthen his position in this regard by requiring the contractor to provide a completion schedule (described later), and by keeping the kinds of records recommended.

1.1.5 GENERAL APPROACH TO REVIEW/ASSESSMENT. The overall approach to review and assessment emphasizes contractor demonstration of compliance with the requirements of the contract and the specification. Three major aspects of each product, subproduct, and intermediate product must be reviewed and assessed. These are:

a. Coverage. Have all products of a given kind been prepared?

b. Format. Do the products that have been prepared meet the specified format requirements?

c. Validity. Are the products that have been prepared accurate and complete?

Assessment of coverage is made by comparing the amount of information on certain designated controlling documents with the amount of information that should be on other controlled documents. For example, the Task Inventory (TI) should contain as many tasks as there are cell entries in the Task Identification Matrix (TIM). Further explanation of the controlling documents and those they control is given in later chapters.

Format is the easiest of the three dimensions to assess. Assessment on this dimension is done by comparing the particular product with the requirements and samples of the draft specification. Page formats can be assessed on single pages independent of other pages, or can be done in groups or volumes. Scheduling of assessment of conformance to format specifications thus has great flexibility.

Validity is the hardest dimension to assess on any of the products. The main tools available for this purpose are the processes of validation and verification. It is possible, however, to make partial checks of factual accuracy, internal consistency, and completeness prior to empirical validation.

In assessing validity of Job Guide Manuals, for example, they can be checked for correspondence with the Test Equipment and Tool Use Form (TETUF), Task Step Data Details (TSDD), and Task Description Index and Management Matrix (TDIMM).

Fully Proceduralized Troubleshooting Aids (FPTA) are more difficult. Assessing validity of any of their intermediate products requires application of engineering and technical know-how to analyze the equipment.

The really difficult validity problem lies in the task analysis area. Validation of the TIM and other intermediate products requires engineering and maintenance know-how, collection of field data related to the maintenance concept, and careful decisions about the expected proficiency level of users.

1.2 ORIENTATION TO THE REVIEW/ASSESSMENT PROCESS

Three major types of data must be reviewed and assessed:

a. Task analysis, which is the basic information on which much of the remaining data is built.

b. Job Guides, which contain detailed instructions for all tasks except troubleshooting.

c. FPTA, which contain step-by-step troubleshooting instructions.

Each of these three major types of data includes a number of intermediate products or subproducts which must be reviewed and assessed. These items, which are described in detail in the draft specification listed in the following table.

Table 1-1

JPA Products, Subproducts, and Intermediate Products

Task Analysis

*Task Identification Matrix (including Subsystem Generation Breakdown)
*Task Inventory
Task Description Index and Management Matrix
Test Equipment and Tool Use Form
Task Step Data Details

Job Guides

*Maintenance Instruction Manual
Input Conditions Page
Replaceable Parts Page
Maintenance Instruction Frames
*Index
*Inspection Guidelines Manual
*Maintenance Support Information Manual

Fully Proceduralized Troubleshooting Aids

List of Components and Failure Modes
List of Functions and Function Failures
Function Failure by Control and Display Matrix
Malfunction Symptoms
Component Block Diagrams
Action Trees and Checkout Procedures
Readings and Tolerances Data Collection Form
*Fully Proceduralized Troubleshooting Aid Volumes
*Index Volume

*Deliverable. All other items reviewed in IPR. Deliverables may also be reviewed in IPR before completion.

The three types of data must be assessed. The interrelationships of these items in JPA development are shown in Figure 1-1.

The following chapters detail the processes of overall management of JPA review and assessment, and the procedures for review and assessment of each type of data.

The overall JPA development process is shown in Figure 1-1.

The following chapters provide detailed guidance for monitoring the procurement of JPAs. They provide procedures for review and assessment of each subproduct, each intermediate product, and each type of JPA to be produced.

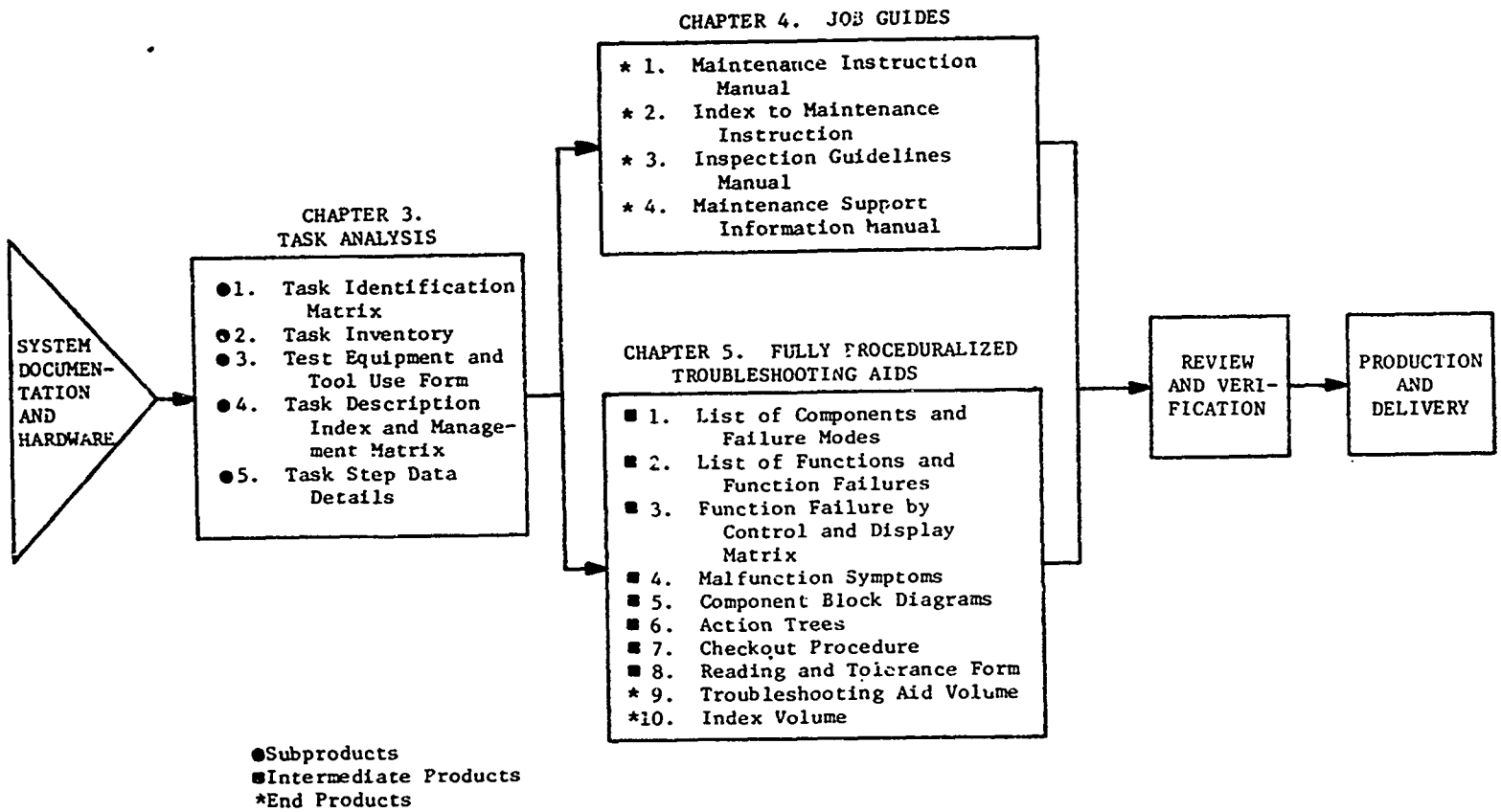

Figure 1-1. JPA Development Process as Described in This Handbook

SECTION II

OVERALL MANAGEMENT OF THE JPA REVIEW/ASSESSMENT PROCESS

2.1 GENERAL

Overall management of JPA review and assessment is a complex process that will test the capabilities of the JPA Manager. The guidelines and procedures which follow in this and later sections attempt to structure the JPA Manager's job in reasonable terms, including the amount of work judged feasible for him to accomplish. The structure also allows for maximum flexibility in scheduling the completion of the various products.

The purpose of this section is to show how the parts of the assessment relate to one another. Later sections contain specific guidelines on when to make various checks, what samples to draw, and how to assess format, coverage, and validity for each of the four major types of products (task analysis, Job Guide Manuals, TDA, and FPTA).

One basic premise which the JPA Manager should assume is that the particular sequence and organization of JPA development used by each contractor will be different. The contractors will adapt the JPA development process to the specific system, budget, and delivery schedule within which they must work. It is to be expected, however, that much of the work will be organized around subsystems; that is, the contractor will complete various parts of the JPA material subsystem by subsystem.

The JPA Manager can ignore the variations in organization and sequence, and concentrate his reviews at specified, definable points in the process. When the contractor claims that an item is completed, however, the JPA Manager must have a means for assessing the resulting product. Adequate records must be kept so that he can assure himself that the contractor has produced all deliverable items. For his own protection, the JPA Manager should not review or accept any products in less-than-whole subsystem segments (unless this handbook specifically suggests a smaller segment for a particular review). Review or acceptance of any size segment the contractor offers will result in an unmanageable recordkeeping problem

Two keys to successful JPA data management are:

a. Knowing at all times what the contractor has completed in each of the three major data areas.

b. Applying the techniques outlined in this handbook which will cause the contractor to demonstrate that his intermediate and final products meet the requirements of the draft specification.

The JPA Manager's first task is to obtain a schedule of completions and deliveries from the contractor. This schedule will tell him when to perform various kinds of reviews.

As the time for a review approaches, consult the Index of this handbook to find the section that prescribes how to conduct the review, and arrange for any technical support required. In addition, reread the pertinent sections of the draft specification and Chapter 6 of AFSC DH 1-3.

Because the contractor will produce most of the material subsystem by subsystem, he is likely to have work proceeding on various types of data, at different stages of completion, on several subsystems at one time. This means that the review and assessment will probably be done on a subsystem-by-subsystem basis. Keep track of what has been reviewed within each subsystem, and of the subsystems that are completed.

2.2 ADVANCE PREPARATION

2.2.1 SPECIFICATION OF CONTRACTUAL REQUIREMENTS. The appendix to this handbook contains detailed procedures for contractor validation of the TIM that should be made contractually binding upon the contractor. The assessment procedures for the TIM (Chapter 3) is based in part upon the assumption that the processes specified in Appendix A will be followed by the contractor. If these contractor validation requirements are mitigated or ignored, either by the JPA Manager or by the contractor, the JPA Manager will be unable to ascertain the accuracy of the TIM and the completeness of coverage of all subsequent products.

2.2.2 FAMILIARIZATION. Assuming that the pertinent specifications and Chapter 6 of AFSC DH 1-3 have been reviewed as suggested in Section I, study the contract under which the JPA are to be delivered. If possible, also study the contractor's technical proposal. These two documents will provide familiarization with the particular equipment involved, the required delivery schedule, the general magnitude of the effort, and the kinds and numbers of personnel the contractor plans to assign to the work. The contract, in particular, will outline what can be expected of the contractor within his scope of work, and what kind of reporting and demonstration can be required of him within his scope.

2.3 PLANNING AND RECORDKEEPING

The contractor must provide the JPA Manager with an overall detailed delivery plan very early in the contract if this plan was not included in the proposal. The delivery plan should be submitted within the first two weeks of the contract. It is essential that this plan contain the information called for below, since it provides the JPA Manager with a basis for scheduling the reviews required to check the development processes of the various products to be delivered.

2.3.1 INITIAL OVERALL DELIVERY PLAN. The overall delivery plan should be submitted to the JPA Manager within 15 days after contract, and should appear in two forms:

a. In a subsystem-by-products matrix, with completion or delivery dates in the cells of the matrix (Figure 2-1).

b. On a time-line base, so that the JPA Manager can see exactly what should be completed at any point in the contract (Figure 2-2).

The items shown on the time-based schedule are obtained from the cells of the matrix. Every cell must be represented on the schedule. Each of the two scheduling documents serves a particular purpose for the JPA Manager.

2.3.1.1 Schedule Matrix. The matrix is the vehicle for keeping track of actual product completion dates as compared with dates originally planned. Each cell in the matrix shows a planned completion date. Write in the actual date of completion in each cell next to the planned date. This will indicate which products have been completed within subsystems, and which subsystems are completed.

2.3.1.2 Calendar Schedule. The calendar schedule contains the same information as the matrix, but in a different arrangement. Product completions are shown in chronological order, enabling the JPA Manager to determine what completions (which may require review) are next on the schedule, without searching through the matrix. The calendar schedule also includes a column for recording actual completion dates, allowing the JPA Manager to keep track of how well the contractor is meeting his schedule. The chronological order of events on the calendar schedule permits a quick and easy check of what has been done as of a particular date, compared with what was originally planned. Because of the chronological base, however, the subsystems and products may be all mixed together. For this reason, the schedule is not used to keep track of completion, since the entire schedule would have to be searched in order to determine if all the products for a subsystem had been delivered. Using the matrix, you need only check that an actual delivery date is entered in every column on a given subsystem row to determine if every product for that subsystem is completed.

2.3.1.3 Updating of Schedule. It is likely that the calendar schedule and the matrix will be revised as the contract progresses. It is important that the JPA Manager have an up-to-date schedule for review planning. Consequently, periodic reviews of the schedule should be arranged, in which the contractor will be required either to confirm, or provide revisions to, the existing schedule.

SCHEDULE MATRIX

SUBSYSTEMS (List below overall)	TASK ANALYSIS											JOB GUIDE MANUALS												FULLY PROCEDURALIZED TROUBLESHOOTING AIDS										NOTES
	Ready for Field Validation	Validated and Corrected	Task Identification Matrix (TIM)	Task Inventory (TI)	15-20% Complete	25-30% Complete	100% Complete	Initial Submittal	Initial Submittal	Task Description Index and Management Matrix (TDIMM)	Test Equipment and Tool Use Form (TETUF)	Task Step Data Details (TSDD)	20-25% of Job Guide Material Written	30-35% of Job Guide Material Written	Maintenance Instruction Manuals Completed	Inspection Guidelines Manuals Completed	Maintenance Support Information Manual Completed	Index to Maintenance Instructions Completed	All Guides Ready for Validation	All Validation Completed	All in Camera-Ready Form	List of Components and Failure Modes (LCFM)	Functions	Function Failures	Function Failure by Control and Display Matrix (FFCDM)	Malfunction Symptoms	Component Block Diagrams	Action Trees	Checkout Procedures	Readings & Tolerances Data Collection Form	FFTA Volumes	Index Volumes		
Subsystem 1																																		
Subsystem 2	((Cells contain dates showing when each item is to be completed for each subsystem))																																	
etc																																		

Figure 2-1. Sample Matrix of Projected Completion Dates for all Products

Scheduled/Actual
Completion Dates by Product

Scheduled Completion Date	Actual Completion Date	Subsystem	Product
Chronological order starting at beginning of contract. ↓			

Figure 2-2. Sample Schedule of Product Completion Dates

2.4 SOME BASIC CONCEPTS IN JPA ASSESSMENT

The following paragraphs provide additional context in which the detailed assessment guidelines of the later sections should be read.

2.4.1 THE ROLE OF VERIFICATION. As stated earlier, the purpose of review and assessment of intermediate products is to minimize the number of errors that carry through to verification. In other words, the purpose of these ongoing reviews is to maximize the probability that the contractor will deliver a complete and valid product that can be used effectively by the Air Force.

Generally speaking, Job Guide Manuals will be given 100 percent verification. Therefore, it is to the contractor's advantage to maximize the chances that these manuals are correct and will be accepted in verification. It is also to the contractor's advantage to use his and the JPA Manager's reviews of task analysis and Job Guide Manual intermediate products to produce good Job Guide Manuals.

Under present policies, FPTA generally gets no verification. The reason for this is that it would require inserting malfunctions into the equipment and measuring the ability of the intended users to use the JPA effectively, which is generally not feasible.

The effect of zero verification on these two kinds of aids is that there is no final check on the completeness or accuracy of the final products delivered by the contractor. It is, therefore, much easier for errors to slip through. This problem is accentuated by the fact that development of FPTA is the newest technology in JPA development. Both the contractor and the JPA Manager may be less skilled in this area than in any other. For this reason, it is essential that the intermediate products for these two kinds of JPA be thoroughly and carefully checked to maximize the quality of the final product.

2.4.2 GENERAL REQUIREMENTS FOR ASSESSMENT.

a. Format. In general, format can be checked for any individual page or pages. The format of any page is independent of the format of any other page, and can be checked by comparing it with the appropriate section in the draft specification.

b. Coverage. Coverage of any product is checked against a controlling product. This means that an interrelationship exists between various products. Consequently, a controlling product must have been reviewed and accepted as complete before it can be used to check the coverage of a product it controls. For example, the TI controls the coverage of the Job Guide Manuals (every task in the TI must be covered in the Job Guide Manuals). But the TI cannot be used as the controlling product until it has been checked against the TIM, which must be validated before comparison with the TI.

c. Validity. The validity of products is tested empirically during contractor's validation, during verification, or during field use. Job Guide Manuals are validated against the task analysis as reflected in the TDIMM, Test Equipment and Tool Use Form, and Task Step Data Details. The TIM is assessed by the JPA Manager's participating with the contractor in his field validation. The validity of FPTA is determined by assessing intermediate products and by ensuring that the proper development process is followed, including Action Tree validation during the Reading and Tolerance determination process.

To be done adequately, the intermediate validation processes which should occur during development of FPTA JPA requires an elaborate and time-consuming procedure of inserting malfunctions into the equipment and then taking extensive measurements. It will sometimes be necessary to allow the contractor to use a less thorough procedure, since the full-scale procedure may not be feasible. Such a compromise should be made with great reluctance and only if absolutely necessary. To the extent that a compromised approach is permitted, degradation of the final product will result.

2.4.3 IMPLIED APPROVAL BY JPA MANAGER. The JPA Manager must realize, and must make certain that the contractor understands, that he is responsible for protecting the interest of the Air Force. His participation in review of intermediate products and processes does not imply approval of all products completed, and does <u>not</u> imply approval of future products prepared in the same way unless, of course, such approval is explicitly given by the JPA Manager.

Participation by the JPA Manager in no way relieves the contractor of his responsibility for an effective quality control program, nor for producing acceptable intermediate and final products. It does not relieve the contractor of his responsibility to rework into acceptable condition any products which fail later acceptance checks.

2.5 SUMMARY

2.5.1 PRIOR TO START OF WORK.

a. Prepare well in advance by studying the draft specification as well as other specifications and exhibits which it references, Chapter 6 of AFSC DH 1-3, and this assessment handbook.

b. Study the contractor's proposal and the contract under which the work is to be done.

2.5.2 IMMEDIATELY UPON START OF WORK. Meet with the contractor and establish:

a. The person who will be the official contact with the buyer.

b. The date on which the contractor will submit his projected completion forms, both the matrix and calendar schedule (Figure 2-1 and 2-2).

c. A tentative schedule for updates of the completion schedule.

d. The general form of In-Process Reviews. (IPRs)

e. The form in which drafts and final copy of deliverable products will be received.

f. That the JPA Manager reserves the right to take as many samples of any product as necessary to assure that errors are within allowable limits.

g. That the contractor must satisfactorily demonstrate that he is meeting the specification--the burden of proof is on him.

h. The "implied approval" disclaimer given in 2.4.3 above.

2.5.3 AS WORK PROGRESSES.

a. Be sure that the contractor delivers the schedule matrix and the calendar schedule on the agreed-upon date.

b. Using the calendar schedule, plan product reviews with the contractor.

c. Keep a record of what has been reviewed and when, and the results of the review (see "Documentation Requirements" sections in each of the sections in this handbook). Use the schedule matrix to identify the products submitted, and as an index to review notes and communications with the contractor.

d. As the time for a review approaches, consult the appropriate section of this handbook for the detailed assessment procedure. The assessment summary checklist at the end of each section gives a brief description of the nature of each assessment procedure, and provides a page reference to the detailed procedure.

e. Apply the guidelines of this handbook in assessing the products, including obtaining help from technical specialists as required.

f. Keep a record of all contractor submittals and JPA Manager reviews on the schedule matrix and the calendar schedule.

SECTION III

MAINTENANCE TASK ANALYSIS

3.1 TASK ANALYSIS ASSESSMENT OVERVIEW

3.1.1 GENERAL. Task analysis is the cornerstone in the development of fully proceduralized JPA. Incompleteness or inaccuracy in some component of the task analysis will almost certainly be reflected as an inadequacy in all subsequent products that are built upon the faulty task analysis component.

3.1.2 TASK ANALYSIS PRODUCTS. The completed Task Identification Matrix (TIM) is the contractor's working definition of all hardware items and related tasks for which JPA coverage is required. Participation in the contractor's validation of TIM (performed in the field by the Data Base Determination Team) is the means by which the JPA Manager must assess the adequacy of the TIM. The JPA Manager's confidence in the validated TIM will be in direct proportion to the extent of his participation in, and overseeing of, the contractor validation. Subsequent products that depend on the TIM for their definitions of complete coverage are: the TI, and the FPTA.

The Task Inventory (TI) represents a reformatting of information contained in the validated TIM. The JPA Manager can and should perform the essentially clerical comparison necessary to establish the complete correspondence between the TI and the TIM. The TI is, as its name implies, an inventory of all tasks that must receive Job Guide coverage. The task analysis proceeds with a detailed investigation of each item in the TI; the investigation is documented in the TDIMM.

The Test Equipment and Tool Use Form (TETUF) contains task-related information about test equipment and special tools. The form should be reviewed prior to initiation of work on the TDIMM. At that point, a large proportion of the TETUF entries will be known by the contractor. The TDIMM must be complete, however, before the TETUF can be known to be complete. The JPA Manager's preliminary review should consist of a comparison of the TETUF with the format and content requirements of 3.2.9 of the draft specification. This should be followed by an evaluation (preferably by a behavioral scientist) of the compatibility of the TETUF task-related information with the level of detail expressed by the TSDD. Subsequent updates of the TETUF should be reviewed in the same manner. When the TDIMM is complete, a final check for TETUF coverage should compare TETUF entries with Column D of the TDIMM. At the same time, a check should be made to ensure that the task statement and code for every TDIMM entry with a reference in Column D is included in the appropriate place on the TETUF.

The Task Description Index and Management Matrix (TDIMM) contains documentation of the detailed investigation of every task in the TI. Assessment of the TDIMM consists of a JPA Manager in-process spot check in which sample entries are examined for conformance to 3.2.10 of the draft specification, in terms of format and type of content. This is followed by a contractor demonstration (for selected TDIMM entries) of the accuracy of the relationship between the entries and the hardware or source documentation from which the entries were obtained. Upon delivery of the completed TDIMM, a final coverage check is performed to verify that a TDIMM is provided for every item on the TI.

The Task Step Data Details (TSDD) provides to the task analyst, and later to the Job Guide writer, a set of standards for level of task description detail required by the JPA user. Properly used by analysts and writers, the TSDD will provide adequate information to the JPA user in the same way by all writers. Assessment of the TSDD involves judgments about the behavioral consequences of various kinds of task instructions, and depends on a knowledge of job-relevant capabilities of the JPA users. Such judgments should be made by persons with a background in behavioral sciences, such as those available from the Air Force Human Resources Laboratory (AFHRL).

3.2 PERSONNEL RECOMMENDATIONS

3.2.1 CONSULTING ASSISTANCE. The services of a consultant with expertise in psychology, technical training, and JPA will be required for adequate assessment of the TSDD and the TETUF. Make arrangements for such consulting assistance as soon as the dates of the first TSDD and TETUF reviews are known.

3.3 TASK IDENTIFICATION MATRIX ASSESSMENT

3.3.1 DESCRIPTION The TIM is the basis from which the tasks are identified for all further products, both intermediate and final. It is essential that the TIM be complete and accurate. The format specified in Figure 1 of the draft specification, and the required coding of hardware items and maintenance functions are aids to preparation, assessment, and validation of the TIM, and provide easy access of information when preparing other products.

The code suggested in Figure 2 of the draft specification, is structured for data processing, and provides placement fields for eight levels of hardware items. The intent of a coded hierarchical equipment listing is to maintain easy identification of equipment levels. In systems where eight hardware levels are not represented, permit the contractor to shorten the code to the number of levels actually in the system. The code used must represent subordination of hardware items within the system, and must consistently use the same number of fields. A place in an unused field for a particular item is held by a zero. The 12 maintenance functions to be covered are: adjust, align, calibrate, checkout, handle, inspect, install, operate, remove, repair, service, and troubleshoot. These functions are also coded as shown in Figure 3-1.

HARDWARE ITEMS \ MAINTENANCE FUNCTIONS	1 Adjust	2 Align	3 Calibrate	4 Checkout	5 Handle	6 Inspect	7 Install	8 Operate	9 Remove	10 Repair	11 Service	12 Troubleshoot
4. Navigation	0	0	0	T_L	0	T_L	T	T_L	T	T_L	0	T_L
4.1 Doppler Radar	0	0	0	T	0	T_L	T	T_L	T	T_L	0	T
4.1.1 Freq. Tracker	0	0	0	T	0	T_L	T	T	T	T_L	0	T
4.1.1.1 Freq. Tracker Case	0	0	0	0	0	T	T	0	T	T_L	0	0
4.1.1.2 Freq. Track. Test Panel	T_L	0	0	T_H	0	T_L	T	T_H	T	T_2	0	T
4.1.1.2.1 Component Brd. Assy.	0	0	0	0	0	T_3	T	0	T	T	0	0
4.1.1.2.1.1 5.6k Ohm Resistor	T	0	0	0	0	0	T	0	T	0	0	0
4.1.1.2.1.2 10k Ohm Resistors(2)	0	0	0	0	0	0	T	0	T	0	0	0
4.1.1.2.1.3 6000 uuf Capacitor	0	0	0	0	0	0	T	0	T	0	0	0
4.1.1.2.1.4 T. B. Subassy.	0	0	0	0	0	T	T	0	T	T_2	0	0
4.1.1.2.2 10 Ohm Resistor	0	0	0	0	0	0	T	0	T	0	0	0
4.1.1.2.3 5.6k Ohm Resistor	0	0	0	0	0	0	T	0	T	0	0	0

NOTES: Hardware items listed hierachically, indented, and coded to show subordination.

Maintenance functions listed alphabetically and coded.

Cell entries use specified symbols.

Figure 3-1. Sample TIM Showing Correct Format

A TIM is commonly produced in segments, subsystem-by-subsystem. Hardware items that interface with two or more subsystems should be identified by the contractor. After production, the TIM is field-validated (see contractor TIM validation procedure, Appendix A). Participation in the field validation of the TIM will be the JPA Manager's primary assessment tool. Confidence in the adequacy of the validated TIM will be a function of the extent of his observation and participation in this field validation.

3.3.2 SAMPLING CONSIDERATIONS. The JPA Manager must oversee the field validation of the entire TIM.

3.3.3 ASSESSMENT STANDARDS. Codes for hardware items and maintenance functions must be in accordance with 3.2.6 of the draft specification.

3.3.3.1 Symbols. Symbols used for task cell entries must be in accordance with 3.2.6 of the draft specification.

3.3.3.2 Confirmation. The contractor should provide evidence of confirmation from the Air Materiel Area (AMA) or System Program Office (SPO) that all provisioned hardware items for the system are listed in the TIM. Permit omission from the hardware listing of bulk stock items such as nuts, bolts, washers, screws, jumpers, safety cable, and clamps. Tasks involving common items are more correctly identified as task steps and should not appear in the TIM. Do not permit omission of wires or hardware items with associated tasks that require special tools. Require the contractor to submit a list of items recommended for omission prior to TIM preparation, and to justify each entry by demonstrating that it is a common item whose associated tasks are properly considered task steps (e.g., remove/install a screw or bolt).

3.3.3.3 Validation. The contractor must perform the TIM field validation in accordance with the validation procedure presented in Appendix A.

3.3.4 ASSESSMENT PROCEDURE. Assessment of the TIM includes participation in field validation and a post-validation coverage check.

3.3.4.1 Before Field Validation.

a. Make arrangements for on-site Data Base Determination Team visits as soon as TIM validation dates and team composition are established.

b. Immediately prior to field validation, verify that the contractor has received confirmation from the appropriate AMA or SPO that all provisioned hardware items are listed in the TIM, and that cell entries reflect current AMA or SPO understanding of the maintenance concept for the system.

3.3.4.2 During Field Validation.

a. Observe all field validation sessions.

b. Enforce contractor compliance with field validation procedures given in Appendix A for every cell in the TIM.

c. Coordinate contractor interviews with individuals in the field who are qualified to comment on the users' maintenance concept.

d. Render decisions as required to resolve differences between field practice and the maintenance concept reflected by the TIM being validated. Such reconciliations may require meetings with additional field maintenance personnel, command personnel, or foreign government representatives. Unless it can be demonstrated that the difference in maintenance concept is a result of a misconception held by the interviewee, the difference should generally be resolved in favor of the stated field practice. The JPA resulting from this task analysis must be compatible with the needs of the field users; their maintenance philosophy must prevail.

3.3.4.3 Post-Validation Check. As the contractor completes validation of TIM segments, accept for approval only those segments for which the contractor can document 100 percent, cell-by-cell validation, in accordance with the validation procedure in Appendix A.

3.3.5 DEFICIENCIES AND CORRECTIVE ACTION.

3.3.5.1 Format.

a. Deviations from the format specified in 3.2.6 of the draft specification are not permitted.

b. Point out any deviation from specified format to contractor and have him correct the deficiency in all validated TIM segments submitted for approval.

3.3.5.2 Hardware Item Omissions.

a. During or following TIM validation, it may be discovered that a hardware item and its associated tasks were omitted from the TIM. All hardware items maintained at the maintenance level for which JPA are being produced must be included in the TIM.

b. Whenever omission of a hardware item from the analysis is discovered (during or following TIM validation), the item must be added to the TIM. All subsequent products, e.g., TI, TDIMM, TDA, must be updated as appropriate to reflect the addition to the TIM.

3.3.5.3 Cell Entry Errors.

a. Cell entry errors are revealed during TIM validation as differences between TIM entries and actual field practice.

b. All cell entry differences should be resolved in favor of actual field practice and TIM entries modified to so indicate.

3.3.6 DOCUMENTATION REQUIREMENTS.

a. Keep track of validation status of each TIM segment.

b. Record receipt of validated TIM segments.

c. Record approval of validated TIM segments.

3.4 TASK INVENTORY ASSESSMENT

3.4.1 DESCRIPTION. The TI lists all the tasks (excluding T_H and T_L entries) identified by the TIM. To uniquely identify each task statement, a code combining the equipment item and maintenance function codes is created, and a final code field identifying the task statement is added. TI assessment is a clerical task, comparing the TI with the approved TIM to verify that all identified tasks appear (in the appropriate format) in the inventory.

3.4.2 SAMPLING CONSIDERATIONS. The entire TI will be checked against the approved TIM.

3.4.3 ASSESSMENT STANDARDS.

a. Task codes and task names must be compiled in accordance with 3.2.7 of the draft specification.

b. There must be one entry in the TI for every T entry identified in the approved TIM.

3.4.4 ASSESSMENT PROCEDURE. Upon submission of the TI for approval:

a. Check that format (task code and task name) is in accordance with 3.2.7 of the draft specification.

b. Compare each TI segment against its corresponding approved TIM segment. Check that each task identified in the TIM has a correctly formatted corresponding entry in the TI. One-hundred percent of the tasks in the TIM must be checked against the TI. Verify that the TI contains the correct number of task statements for each TIM cell. For example, a T entry in the TIM requires one task statement in the TI; a T_3 entry requires three task statements. T_H and T_L entries in the TIM are not listed in the TI as task statements.

c. If the contractor proposes omission of some TIM tasks from the TI, require him to demonstrate that such tasks are within the normal repertoire of the JPA user.

3.4.5 DEFICIENCIES AND CORRECTIVE ACTION

3.4.5.1 Format Errors.

a. Deviations from 3.2.7 of the draft specification are not permitted.

b. Point out any deviation from specified format to the contractor and have him correct the deficiency in all TI segments submitted for approval.

3.4.5.2 Omissions from the TI.

a. Some tasks may appear on the TIM for which no corresponding TI entry can be found.

b. Every item in the TIM must be accounted for. Require the contractor to justify every omission. If an omitted task cannot be justified as a normal repertoire task, require the contractor to include the task in the TI.

3.4.6 DOCUMENTATION REQUIREMENTS.

a. Record receipt of TI segments in the schedule matrix. Check off corresponding TIM segments until entire TIM is covered.

b. Record approval of TI segments.

3.5 TASK STEP DATA DETAILS ASSESSMENT

3.5.1 DESCRIPTION. The TSDD is a narrative document describing the kinds of information that will be included in the JPA to ensure that the user will be able to perform the task. This document provides the JPA Manager and the JPA writer with the details of the contractor's assumptions and judgments about the user's needs and capabilities. Technicians who will use JPA are described in Chapter 6 of AFSC DH 1-3 as:

a. Able to use the tools in their tool kits.

b. Never having performed the procedure before.

c. Not able to use special tools or test equipment.

d. Not able to request technical assistance in performing the task.

The TSDD is begun as soon as behaviors are identified. Once a behavior is identified, the details of how that behavior will be handled by a JPA writer are determined. For example, the perceptual behavior of recognizing a sound would require details of what the JPA writer must include every time a sound is to be recognized, to ensure correct perception of that sound and discrimination of that sound from others. Descriptors would be required for such things as:

a. The source of the sound.

b. Pitch of the sound.

c. Duration of the sound.

d. Distractors from hearing the sound.

As an aid to developing TSDD, 3.2.11 of the draft specification lists such classes of behavior (with examples) as:

a. Discriminations and perceptions.

b. Problem-solving and decision-making.

c. Motor actions.

TSDD decisions should be made by the contractor about all classes of behavior listed in the specification before work on the TDIMM is begun. TSDD development should continue throughout the task analysis development, and any additions or revisions subsequent to the first review must be approved by the JPA Manager.

3.5.2 SAMPLING CONSIDERATIONS. The entire TSDD will be reviewed prior to commencement of work on the TDIMM. All subsequent modifications will also be reviewed.

3.5.3 ASSESSMENT STANDARDS.

a. TSDD submitted for initial review must cover all classes of behavior listed in 3.2.11 of the draft specification.

b. Details in the TSDD must reflect the needs of the JPA user. Information to be provided in Job Guide maintenance instructions must be sufficient to guide the user in successful performance of the task without outside assistance. Assessment of this characteristic of the TSDD should be performed by an individual with expertise in psychology, technical training, and JPA. If such an individual is not a member of the JPA Manager's staff, he should plan to use a consultant with the stated capabilities.

c. The TSDD must reflect contractor efforts to be exhaustive in identification and detailing of behaviors. The classes and examples of behaviors listed in 3.2.11 of the draft specification are not exhaustive. The contractor should be expected to update the TSDD subsequent to the initial review as additional behaviors are identified.

3.5.4 ASSESSMENT PROCEDURES.

a. Make arrangements for approximately one man-day of professional consulting time per system as soon as the TSDD initial delivery date is established.

b. Schedule initial review and approval of the TSDD to occur before the contractor proceeds with development of the TDIMM. Approve TSDD segments as submitted, with the provision that further assessment will be required for any subsequent task behavior details that are developed.

c. When the TSDD is submitted for initial review, verify that details are provided for all classes and examples of behaviors listed in 3.2.11 of the draft specification.

d. For each listed detail, make a judgment (based upon knowledge of the behavioral consequences of the kinds of task instructions and upon knowledge of the job-relevant capabilities of the JPA users) as to whether the user, given description to the detail specified, will be able to perform the behavior. Consulting assistance will probably be required for performance of this step.

3.5.5 DEFICIENCIES AND CORRECTIVE ACTION.

a. Possible deficiencies might be:

1. Inadequate detail. Given known user capabilities, it is judged that the user would require additional information in the maintenance instruction in order to successfully perform the behavior.

2. Excessive detail. It is judged that the listed details exceed the information requirement of the user, or provide support for normal repertoire behaviors not requiring JPA assistance.

b. Inform the contractor of noted deficiencies, their nature, and extent. Require correction as necessary prior to submission of further TSDD material and prior to commencement of TDIMM development.

3.5.6 DOCUMENTATION REQUIREMENTS.

a. Record dates of TSDD review.

b. Record deficiencies observed in each review.

c. Record instructions to the contractor for TSDD correction.

3.6 TEST EQUIPMENT AND TOOL USE FORM ASSESSMENT

3.6.1 DESCRIPTION. The TETUF consolidates data about test equipment and special tools. This form provides a checklist for the task analyst and JPA writer, indicating the level of detail of task step descriptions

that must be provided to the JPA user whenever he encounters use of the test equipment or special tools. The TETUF also provides an entry into the task description data base for each test equipment or tool entry by referencing each task in the data base on which that item is used. Assessment of the task reference entries is a clerical task; assessment of the task step details for use of the item requires the same behavioral expertise as assessment of the TSDD. First submission of the TETUF for review should occur prior to development of the TDIMM. Monthly reviews should be scheduled for entries added as a result of TDIMM development. A final completeness check of the TETUF is made upon completion of the TDIMM.

3.6.2 SAMPLING CONSIDERATIONS. The entire TETUF will be reviewed upon first submission. All subsequent additions will be reviewed on a monthly basis. The final completeness check will check each task reference entry against the completed TDIMM.

3.6.3 ASSESSMENT STANDARDS.

a. When the TDIMM is complete, every piece of test equipment and special tool listed in Column D for the entire system must be represented on the TETUF.

b. When the TDIMM is complete, the task statement and code for every TDIMM entry with a reference in Column D must be included in the appropriate place on the TETUF.

c. Details in the task information column must reflect the needs of the JPA user. Information to be provided in Job Guide maintenance instructions must be sufficient to guide the user in successful performance of the task without outside assistance. Assessment of this characteristic of the TETUF should be performed by an individual with expertise in psychology, technical training, and JPA. If such an individual is not a member of the JPA Manager's staff, consulting assistance will probably be required for performance of this step.

3.6.4 ASSESSMENT PROCEDURES.

a. Schedule initial review and approval of TETUF to occur before the contractor proceeds with development of the TDIMM. Approve TETUF segments as submitted, with the provision that further approval will be required of any additions.

b. In the initial review, verify that details are provided for all test equipment and special tools in accordance with 3.2.9 of the draft specification.

c. Judge whether the classes of specific information listed for each test equipment or tool function present adequate instructions for the performance of the function by the intended users. This judgment must be based upon knowledge of the expected capabilities of the intended users. Consulting assistance from a behavioral specialist will probably be required for this step.

3.6.5 DEFICIENCIES AND CORRECTIVE ACTION.

a. Possible deficiencies might be:

1. Inadequate details. Given known user capabilities, it is judged that the user would require additional information in the maintenance instruction in order to successfully perform the behavior.

2. Excessive detail. It is judged that the listed details exceed the information requirement of the user, or provide support for normal repertoire behaviors not requiring assistance.

b. Inform the contractor of noted deficiencies, their nature, and extent. Require correction as necessary prior to submission of further TETUF material and prior to commencement of TDIMM development.

3.6.6 DOCUMENTATION REQUIREMENTS.

a. Record dates of TETUF review.

b. Record deficiencies observed in each review.

c. Record instructions to the contractor for TETUF correction.

3.7 TASK DESCRIPTION INDEX AND MANAGEMENT MATRIX ASSESSMENT

3.7.1 DESCRIPTION. The TDIMM is that part of the task description data base which stores data and data references for every step in every task listed in the TI. The format of the TDIMM is specified in 3.2.10 of the draft specification. Task-descriptive data and references are stored in 22 categories for each task statement. A 23rd column is provided for special notes about the tasks. Early in the TDIMM production process, a spot check is made in which sample entries are examined for conformance to the specification. At the same time, the contractor is asked to demonstrate, for selected entries, the accuracy of the relationship between the entries and the hardware or source documentation from which the entries were derived. Upon delivery of the completed TDIMM, a final clerical check is performed by the JPA Manager to verify that a TDIMM entry is provided for every item on the approved TI.

3.7.2 SAMPLING CONSIDERATIONS. At a point in the production process before 20 percent of the TDIMM has been produced for any given subsystem, a random sample of the 10 TDIMM entries should be selected from that subsystem for examination. The assessment procedure is to be applied to this random sample of 10 TDIMM entries from among the first 20 percent produced for each subsystem.

3.7.3 ASSESSMENT STANDARDS.

a. Task statements must be identical to the corresponding task statements in the TI.

b. The format must be as specified in 3.2.10 of the draft specification.

c. There must be an entry in every cell in the matrix.

d. The symbols used and the types of information provided in the matrix cells must be appropriate, as defined by 3.2.10 of the draft specification.

e. All cell entries must be accurate, i.e., the contractor must be able to demonstrate that all data entries and references are valid by producing the documentation upon which the entries were based, and showing the relevance of the documentation to the tasks.

3.7.4 ASSESSMENT PROCEDURES.

3.7.4.1 JPA Manager Review.

a. When the TDIMM production schedule is established, arrange to be notified by the contractor when 15-20 percent of the TDIMM has been prepared for each subsystem. Perform the following steps for each subsystem in the system.

b. Pick a random sample of 10 TDIMM entries from among the first 15-20 percent of the entries produced for the subsystem.

c. Compare the task statements with the corresponding task statements on the TI; the code and task name must be identical.

d. Verify that all 23 data columns (A through M) are listed across the top of the TDIMM.

e. Verify that there is a data entry in every matrix cell in the sample.

f. Examine the columns listed in Table 3-1 and verify that the necessary types of data entries are in the appropriate columns on the TDIMM.

3.7.4.2 Contractor Demonstration. For the following steps, require the contractor to assemble the entire task description data base related to the sampled TDIMM entries. All Technical Orders, drawings, notes, or other data that would be used by the Job Guide writer in creating instruction frames from the TDIMM must be on hand for this contractor demonstration.

a. Have the contractor trace, step-by-step, the relationship between task steps described in Column K2 of the TDIMM and the documentation from which the steps were derived.

Table 3-1

Types of Data Entries*

Column	Must contain:
A	Equipment description
B	Equipment drawings
C	Equipment configuration applicability
F1 and F2	Personnel requirements
G	Equipment condition
I	Replacement parts
J	Forms
K1	Task initiation
K7	Maintenance support
K8	Special instructions and SOPs
K9	Follow-on tasks
K10	Task repetition

*These entries are explained in Section 6B of Chapter 6 of AFSC DH 1-3.

b. Have the contractor demonstrate for each task that:

1. The JPA user will be able to identify the hardware items that the task involves.

2. If similar items are present, a means is provided for precluding confusion among the items.

3. All access steps are included.

4. All necessary equipment conditioning steps are included.

5. All special cautions, warnings, and notes are included.

6. Any information necessary to avoid errors is included.

7. All special tools and test equipment used in the tasks are listed in Column D (also, all items listed in Column D are used in the task).

8. Information provided in Column K2 about the use of special tools and test equipment is compatible with the TETUF.

9. The level of detail of information provided in task steps is compatible with the level of detail required by the TSDD.

10. All supplies and materials mentioned in task steps are listed in Column E (also, assure that all supplies and materials listed in Column E are used in task steps).

11. Any notes, cautions, and warnings applicable to the entire task are provided in Column H. Verify that entries in Column H contain a statement of the potential hazard, the likely result of its occurrence, and steps to be taken to avoid the hazard.

c. Check completed TDIMM segments against the TI. A TDIMM segment is complete when it contains one entry for each entry in the TI for that subsystem.

3.8 TASK ANALYSIS ASSESSMENT SUMMARY CHECKLIST

See Figure 3-2.

Item Reviewed	When Reviewed	Assessment Procedure	Item Sample	Format	How Assessed Coverage	Validity
TIM	TIM Field Validation	Page 17	100%	Compare with 3.2.6 of draft specification	Have AMA or SPO give tentative OK to TIM before validation	Enforce contractor following of validation plan in Appendix A
TI	TI complete	Page 21	100%	Compare with 3.2.7 of draft specification	Compare with approved (validated) TIM	Reformat of TIM
TETUF	First TETUF submittal	Page 24	100%	Compare with 3.2.9 of draft specification	No check	Data consistent with TSDD
	When TDIMM complete				Compare with TDIMM, Col. D	
TSDD	First TSDD Submittal	Page 22	100%	Compare with 3.2.11 of draft specification	Compare with 3.2.11 of draft specification	Judgment of behavioral consultant
	Any subsequent addition				Judgment of behavioral consultant	
TDIMM	Less than 20% production per subsystem	Page 26	10 entries per subsystem	Compare with 3.2.10 of draft specification	Compare with 3.2.10 of draft specification	Contractor demonstration
	TDIMM		100%	No check	Compare with approved TI	No check

Figure 3-2. Task Analysis Assessment Summary Checklist

SECTION IV

JOB GUIDES

4.1 JOB GUIDE ASSESSMENT OVERVIEW

4.1.1 GENERAL. The Job Guides for a system will undergo three distinct checks in order to ensure that the materials are accurate, complete, and in the proper format. A check made early in the Job Guide writing process supplements the contractor review of each writer's product required by 3.3.7.3.y of the draft specification. Parti ation in the contractor's validation of Job Guides is the means whi. the JPA Manager must assess the validity (accuracy) of the Job Guide The JPA Manager's confidence in the validated Job Guides will be in dir. t proportion to the extent of his participation in and overseeing of e contractor validation. A final preprinting check performed by the J Manager ensures that all required Job Guide mat als have bee ated and delivered.

4.2 PRELIMINARY FORMAT AND CONTENT REVIEW--ASSESSMENT OF CONTRACTOR REVIEW

4.2.1 DESCRIPTION. When the contractor has performed the review of each Job Guide writer's work in accordance with the procedure described in Section 6C, Chapter 6 of AFSC DH 1-3, the JPA Manager selects a sample from among the materials reviewed by the contractor and performs an identical check, comparing his results with those obtained by the contractor. The contractor draws a 10 percent random sample of each writer's work once 20-25 percent of Job Guide materials have been written. The sample reviewed may consist of any combination of the Maintenance Instruction Manuals (MIM), the Inspection Guidelines Manuals (IGM), and maintenance instruction frames from the Maintenance Support Information Manuals (MSIM). Writing and illustrating requirements of these manuals are identical; the sample of Job Guide writing examined in this review will be assumed to be representative of all such writing in the set of Job Guides.

4.2.2 SAMPLING CONSIDERATIONS. The contractor will have selected a sample of 10 percent of the material produced by each Job Guide writer to date. The JPA Manager should select a 10 percent random sample from the contractor's sample material for each Job Guide writer (making the JPA Manager's sample one percent of the material produced at that point).

4.2.3 ASSESSMENT STANDARDS. See Table 4-1.

4.2.4 ASSESSMENT PROCEDURE.

a. When the Job Guide production schedule is established, have the contractor indicate the date on which the contractor Job Guide review will occur.

Table 4-1

Review Outline

Topic	Specification Compliance Check (Draft Specification)	Completeness and Accuracy Check (Column refs. to TDIMM)
Input Conditions Page(s)	See Figure 5 for example	
1. Activity, Title	3.3.3.4.a	See Activity Planning Form (APF) for proper title. Note: Record from APF the locations in the TDIMM of all activity tasks
2. Applicable Serial Numbers	3.3.3.4.b	Column C for all tasks
3. Special Tools and Test Equipment	3.3.3.4.c	Column D, all tasks, and Tool Use Forms as specified therein (Hold these forms for later reference.)
4. Supplies	3.3.3.4.d	Column E, all tasks
5. Personnel Required	3.3.3.4.e	Columns F1 and F2, all steps in all tasks
6. Equipment Conditions	3.3.3.4.f	Column G, all tasks
7. Warnings, Cautions, and Notes	3.3.3.4.g	Column H, all tasks
8. Activity Index	3.3.3.4.h	See APF for a list of activity tasks and their ordering

Table 4-1 (continued)

Topic	Specification Compliance Check (Draft Specification)	Completeness and Accuracy Check (Column refs. to TDIMM)
Replacement Parts Page(s) (Text and Illustration Pages)	See Figure 6 for example	
9. Activity Title		See Input Conditions Page Title
10. Replacement Parts	3.3.3.5	Column I, all tasks
11. Parts Callouts	3.3.3.5	Check the parts list on the text page against the callouts on the illustration; use IPB referenced in Column I for the activity tasks involved
12. Illustration Page	3.3.7.4.a,b,e,g,h, and 3.3.7.5	Drawings referenced in Column B and the IPBs used for Topic 11 check
Maintenance Instruction	See Figure 7 for example	
13. Activity Title		See Input Conditions Page Title
14. Task Title	3.3.3.4.a, except that initial caps are used	See APF or TDIMM for title
15. Task Steps	3.3.3.4.g, 3.3.3.6.a, 3.3.7.3, and the Noun/ Objective List	Column K2 and J, K3, and Tool Use Forms as required for the task being reviewed

Table 4-1 (continued)

Topic	Specification Compliance Check (Draft Specification)	Completeness and Accuracy Check (Column refs. to TDIMM)
16. Keying Text to Illustration	3.3.3.6.a	Check callouts in the text against callouts in the illustration. Use the IPBs referenced in Column I for the task being reviewed
17. Illustration Page	3.3.7.4	Drawings referenced in Column B, the IPBs used for the Topic 16 check, and the Tool Use Forms for the activity being reviewed
<u>Front Matter</u>		
18. Front Matter	3.3.7.2 except that the cover will not be reviewed	

b. When the contractor review has been conducted and he has identified the tasks included in his 10 percent sample of each Job Guide writer's work, pick a random sample of 10 percent from the sample selected by the contractor for each writer.

c. Assemble the TETUF, the TSDD, and the TDIMM entries (including all referenced data) for every task in the sample.

d. Examine each of the topics in Table 4-1 for every task in the sample.

1. For each topic, check the format used against the relevant section in the draft specification.

2. Trace the relationship of the Job Guide content as it is written to the task data on the TDIMM from which the material was taken.

e. Experience has shown that a frequent problem with illustrations (topic 17 in Table 4-1) may involve level of detail. Locators may be too general to adequately convey the location of a detailed view, and detailed views are often cluttered with extraneous detail. Figure 4-1 provides examples of proper and improper level of detail for a locator illustration, and Figure 4-2 shows examples of adequate and extraneous detail in a specific illustration.

f. Locate on the TSDD each class of behavior represented in each task in the sample. Verify that every applicable item of information required by the TSDD for that behavior has been properly included in the Job Guide. The following example illustrates both correct and incorrect application of the TSDD to the writing of a maintenance instruction frame.

1. Assume that the TSDD statement about reading quantitative values for a meter reading is as follows:

> On each occasion that a meter reading is taken, an easily read illustration of the meter face shall be used. The text shall state the range of acceptable readings, and the illustrated meter shall show the nominal value (the midpoint of the range) of the expected reading.

GENERAL LOCATORS FOR A CIRCUIT BREAKER INSIDE THE AIRCRAFT COCKPIT

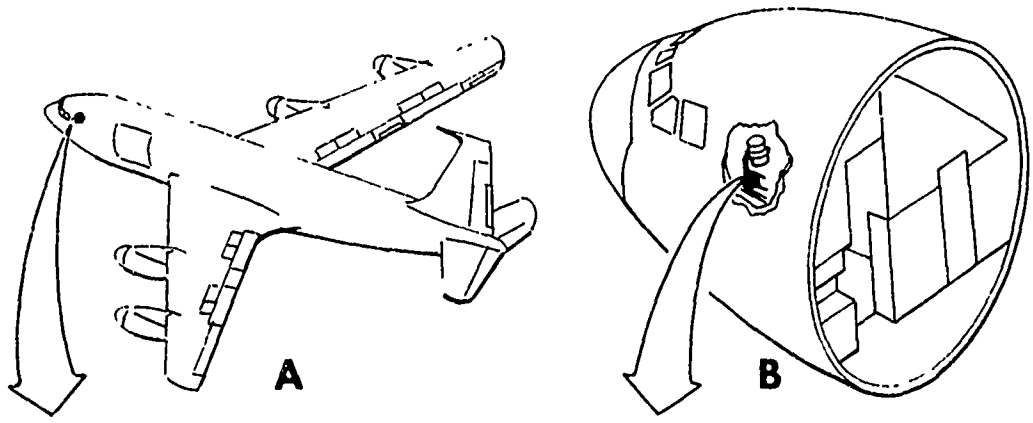

A. AMBIGUOUS GENERAL LOCATOR

Illustration A does not show if the circuit breaker is inside or outside of the plane. The rear section of the plane conveys no useful information.

B. GOOD GENERAL LOCATOR

Illustration B shows the breaker is in a panel in the forward section of the plane. This illustration conveys more information in a less ambiguous manner.

Figure 4-1. Examples of Proper and Improper Level of Detail for Locator Illustration

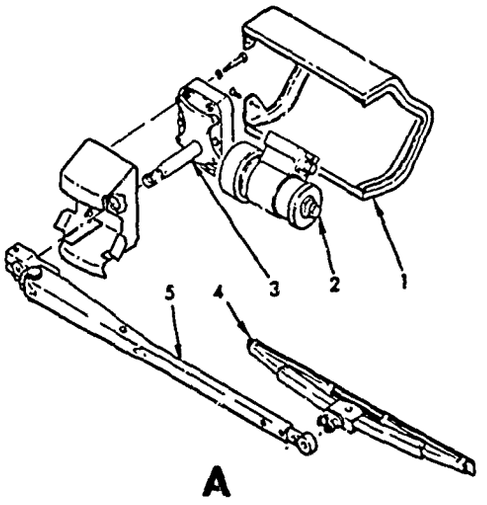

A. Specific illustration clearly delineating proper level of detail for removing and installing the windshield wiper and motor converter.

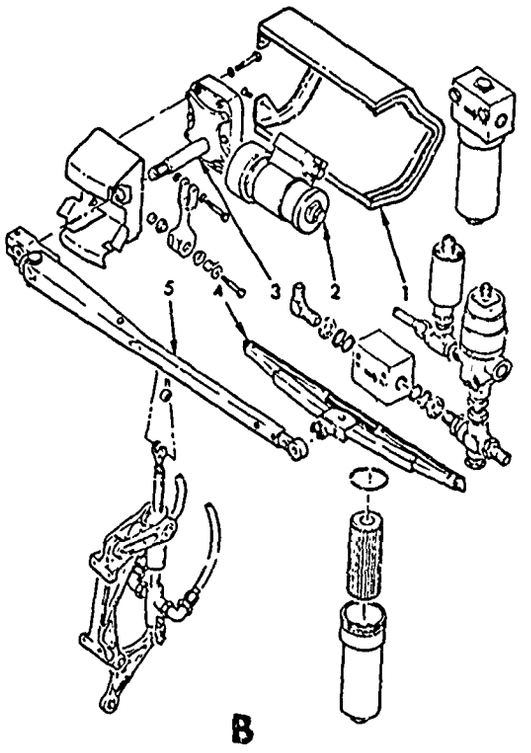

B. Specific illustration obscuring the relevant parts with extraneous detail.

Figure 4-2. Examples of Adequate and Extraneous Detail in a Specific Illustration

2. An incorrect application of this TSDD statement might appear as follows:

Text	Illustration
Request that specialist connect external electrical power to aircraft. Check that DC voltmeter (1) reads approximately 28 volts.	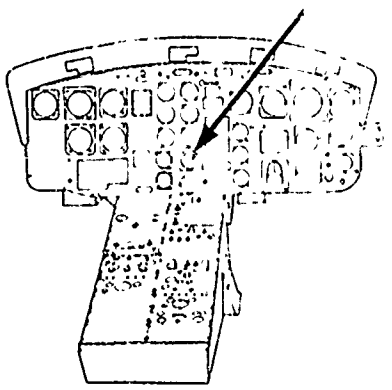

Note that the reading stated in the text is not in terms of a range of acceptable values, and that the illustration of the meter is not detailed enough to show the meter face with the nominal reading as required by the TSDD.

3. A correct application of the TSDD statement to the presentation of the same information might appear as follows:

Text	Illustration
Request that specialist connect external electrical power to aircraft. Check that DC voltmeter (1) reads 27-29 volts.	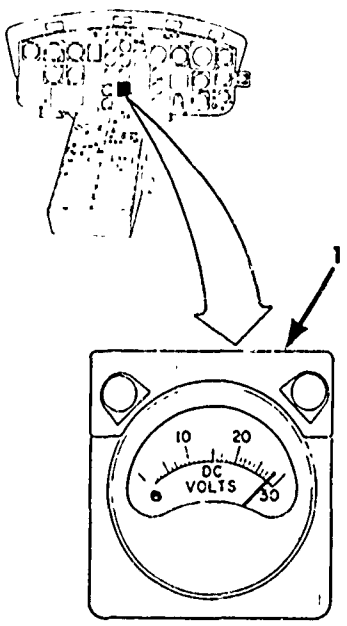

Note that the text states a range of acceptable readings, and that the illustration shows a detailed view of the meter face with the needle on the midpoint of the stated range of values.

g. Examine each complete activity within the sample for excessive referencing. Ensure that, within an activity, no more than one reference is made outside the Job Guide volume, and no more than two references are made to operations described outside the activity, but within the same volume.

h. Record every error identified during this check. When the contractor's review is complete, compare your record of errors with his. Report the results of the review to the contractor, placing particular emphasis on any errors uncovered that were not detected during his review.

4.2.5 DEFICIENCIES AND CORRECTIVE ACTION.

a. Instruct the contractor to correct all errors detected during both reviews, and to locate and correct all similar errors in material not reviewed.

b. If a high number of errors is detected in a sample from any writer, arrange with the contractor to schedule a subsequent contractor review, after an additional 10 percent of the Job Guide material is written. In any subsequent review, the contractor should choose and report upon a sample of five percent of the material produced by each writer since the last review. Also, confirm that errors detected in the previous sample have been corrected. Reserve the right to continue the sampling review process throughout Job Guide production, or until the detected error rate becomes sufficiently low.

4.2.6 DOCUMENTATION REQUIREMENTS.

a. Record all tasks sampled by the contractor for the contractor Job Guide review.

b. Record all tasks included in the JPA Manager's review.

c. Record deficiencies discovered during the JPA Manager's review and retain a copy of the communications about these deficiencies to the contractor.

d. Retain a copy of the contractor's working paper documenting his review.

4.3 JOB GUIDE VALIDATION

4.3.1 CONTRACTOR REQUIREMENTS. The contractor is required to perform a 100 percent hands-on validation of all Job Guide materials. All tasks in the MIM, IGM, and MSIM must be performed exactly as stated in the Job Guides. The Index Manual must be used to locate each task as performed. Activities must be validated within the context of task continuity, rather than one at a time without regard to sequence. Activity validation must begin with the first task necessary to initiate work and proceed to the last, even if follow-on maintenance is referenced in another activity. This may result in delaying validation of some activities until later sections are completed. Referenced material in the MSIM in other than maintenance instruction form must be read for understanding by someone other than the writer. The JPA Manager must oversee all Job Guide validation testing sessions and enforce the contractor's following of the validation procedure as described in Section 6C of Chapter 6 of AFSC DH 1-3.

4.3.2 SAMPLING CONSIDERATIONS. The JPA Manager must oversee all Job Guide validation.

4.3.3 ASSESSMENT STANDARDS. No Job Guide material may pass validation until all technical errors or deficiencies leading to user misunderstanding have been corrected. The test subjects must be able to perform every task without technical error and without the need for assistance in interpreting text or illustration.

4.3.4 ASSESSMENT PROCEDURE.

a. Arrange for JPA Manager representation at all validation sessions as soon as the sessions are scheduled.

b. Examine the contractor's test plan. The plan must specify the number of test subjects that will perform each activity, the number of activities each subject will perform, the number of testing units operating simultaneously, and the proposed sequence of activities to be validated at each task session. This sequence must be structured to permit follow-on activities to be evaluated in proper order with primary activities.

c. Examine the contractor-developed observation forms. These forms will guide the technician/observer in recording comments on the validation of the Job Guides. A suggested validation observation form is presented in Figure 4-3.

d. As validation proceeds, ensure that the contractor's technician/observers assist or interrupt subjects only for the purpose of correcting errors or anticipating difficulties, and ensure that all such necessary interactions with the subjects are recorded on the observation forms.

e. Ensure that the subjects use all components of the Job Guide series to direct them in all phases of the activities: acquisition of supplies and tools needed, references, warnings, actual task steps, etc., with the subjects relying completely on the Job Guides and not inferring data that may be missing.

f. Ensure that, before performing any activities, the subject looks up the activity in the Index and verifies the correctness of the page reference.

g. Ensure that the MSIM is consulted every time a reference to it is made in the Job Guide. Ensure that tasks are performed in accordance with guidance provided in the MSIM. Ensure, also, that all support information not in the form of task instructions is read for understanding by the subject.

OBSERVER _____

ACTIVITY TITLE _____ JOB GUIDE VOLUME _____

TASK TITLE _____ STEPS _____

1. LOCATION OF ERROR:

Input Conditions Page

1. Activity Title ___
2. Applicable Serial Nos. ___
3. Special Tools and Test Equipment ___
4. Supplies ___
5. Personnel Required ___
6. Equipment Conditions ___
7. Warnings, Cautions, and Notes ___
8. Activity Index ___

Replacement Parts Page

9. Activity Title ___
10. Replacement Parts ___
11. Parts Callouts ___
12. Illustration Page ___

Maintenance Instruction

13. Activity Title ___
14. Task Title ___
15. Task Steps ___
16. Keying Text to Illustration ___
17. Illustration Page ___

Front Matter

18. Front Matter
    a. Title Page ___
    b. List of Effective Pages ___
    c. Table of Contents ___

2. DESCRIPTION OF ERROR:

3. SUGGESTIONS FOR IMPROVEMENT:

a. SUBJECT:

b. OBSERVER:

Figure 4-3. Suggested Validation Observation Form

4.3.5 DEFICIENCIES AND CORRECTIVE ACTION.

a. Do not permit deviations from the validation test plan unless contractor justification for such deviation is provided.

b. In observing the test sessions, ensure that the test subjects are not aided in any way, except to correct deficiencies in the Job Guide material. Do not permit the contractor to allow subjects to skip such steps as use of the Index, use of the Input Conditions Page, performance of follow-on activities, or use of the MSIM.

c. Categorize the outcome of validation of an activity in one of the following ways:

1. Activity validated and acceptable.

2. Activity validated and acceptable if marked corrections are implemented.

3. Activity not acceptable; rewrite and revalidate.

4.3.6 DOCUMENTATION REQUIREMENTS. Maintain access to observation forms and to the record of categorization of each activity following validation. These records will be used in the post-validation coverage check to ensure that deficiencies revealed during validation are corrected prior to verification.

4.4 POST VALIDATION COVERAGE CHECK

Upon completion of validation, the contractor will implement necessary changes and prepare Job Guide material in camera-ready form. At this point, the JPA Manager makes a final check of the Job Guide materials to verify that:

a. All tasks in the TI are covered in Job Guide activities.

b. The title of each activity conveys the general nature of the tasks included in it. Once each activity title is checked, judge whether material should be included in the Maintenance Instruction Manual, Inspection Guidelines Manual, or Maintenance Support Information Manual. Material in the Inspection Guidelines Manual should consist of activities involving preflight inspection, basic post-flight inspection, phased inspection, and periodic inspection, including ground handling and general service. MSIM material should contain general aircraft information, ground support equipment descriptions, standard maintenance procedures, and other information previously agreed upon (between the contractor and JPA Manager) for MSIM inclusion. All other material belongs in the MIM.

c. The organization of the Index is in accordance with 3.3.4 of the draft specification.

d. All MSIM material required by 3.3.6 of the draft specification and by Column 7 in the TDIMM have been covered.

The details of these JPA Manager checks are presented below within the sections dealing with each of the major Job Guide products.

4.5 MAINTENANCE INSTRUCTION MANUALS

4.5.1 DESCRIPTION.

a. The MIM contains illustrated, step-by-step instructions for the performance of specified maintenance functions on applicable hardware items. These functions are: adjust, align, calibrate, checkout, handle, inspect, install, operate, remove, and repair.

b. The MIM is divided into volumes of a maximum of 300 pages (150 sheets). At least one volume is provided for each aircraft subsystem. Each volume contains front matter consisting of Title Page, List of Effective Pages, and Table of Contents, and is divided into sections covering separate activities. An activity is a single maintenance task or group of tasks all related to a higher order maintenance function such as checking or adjusting a number of similar hardware items.

c. Each section (activity) has three "units": an Input Conditions Page, a Replacement Parts Page, and one or more maintenance instruction frames. The first two units inform the technician of parts, tools, supplies, and other hardware necessary for the performance of the activity. The maintenance instruction frames give step-by-step instructions on how to complete the activity. Replacement Parts Pages and maintenance instruction frames have illustrations keyed to written text.

d. The preliminary format and content check and the contractor validation of the Job Guides, described in 4.2 and 4.3 above, include partial assessment of the MIM. The check discussed here is intended to establish that all necessary MIM volumes have passed validation and are ready for acceptance into verification.

4.5.2 SAMPLING CONSIDERATIONS. All MIM volumes will be checked.

4.5.3 ASSESSMENT STANDARDS. All tasks listed in the TI for a subsystem must be included in the MIM for that subsystem, except for tasks involving preflight inspection, post-flight inspection, phased inspection, and periodic inspection, which will be included in the IGM.

4.5.4 ASSESSMENT PROCEDURE.

a. Ensure that all tasks in the TI have been formed into activities by checking to see that at least one activity number appears in the activity number column opposite each task entry in the TI. Any task in the TI with no corresponding activity number must be assumed to be missing from the Job Guides.

b. Check the Job Guide volumes to ensure that all activities referenced in the TI are present.

4.5.5 DEFICIENCIES AND CORRECTIVE ACTION.

a. Activities not located in the proper volume represent contractor error. The contractor must resolve all such errors by placing tasks in the proper volumes.

b. Tasks appearing on the approved TI, but discovered during validation to be missing from Job Guide material, must be prepared and validated before the Job Guides can be accepted for verification.

4.5.6 DOCUMENTATION REQUIREMENTS. Check off each task in the approved TI as it is determined that the task is properly located within the Job Guide volumes and has passed validation.

4.6 INDEX TO JOB GUIDES

4.6.1 DESCRIPTION. The Index Manual provides systematized reference information to all activities included in the MIMs. At least one Index volume is provided for each series of MIMs, that is, for each system. Each volume is limited in size to 300 pages (150 sheets). Within each index in alphabetical order, three separate listings are provided:

a. Major subsystem.

b. Equipment alphabetical.

c. Line-Replaceable Item (LRI) alphabetical.

The accuracy of entries in the Index will be checked during Job Guide validation, as described earlier in this section. The post-validation coverage check will determine compliance with the Index arrangement requirements of 3.3.4 of the draft specification.

4.6.2 SAMPLING CONSIDERATIONS. The entire Index will be checked.

4.6.3 ASSESSMENT STANDARDS. The Index will be checked against the TI to verify compliance of listings with 3.3.4 of the draft specification.

4.6.4 ASSESSMENT PROCEDURE. Compare the Index with the TI and ensure:

a. Within the major subsystem listing, that each subsystem is properly divided into equipment and LRIs, with none missing and no extra entries; and that all maintenance tasks performed on each LRI are listed alphabetically under the LRI.

b. Within the equipment alphabetical listing, that equipment and maintenance task listings are complete.

c. Within the LRI alphabetical listing, that LRI and maintenance task listings are complete.

4.6.5 DEFICIENCIES AND CORRECTIVE ACTION. The omission or misplacement of any item within any of the Index listings must be corrected by the contractor. Figure 4-4 illustrates potential deficiencies in the Index.

4.6.6 DOCUMENTATION REQUIREMENTS.

a. Note on a copy of the TI any activities that are missing or incorrectly entered in the Index.

b. Submit to the contractor a copy of the Index with deficiencies marked.

4.7 INSPECTION GUIDELINES MANUAL

4.7.1 DESCRIPTION. The IGM contains illustrated step-by-step instructions for maintenance functions performed during inspections. The inspections covered are: preflight inspection, basic post-flight inspection, phased inspection, and periodic inspection. Ground handling and general service (lubrication, fueling, defueling, cleaning, and paint touch-up) are considered part of the instructions for these inspections. The writing and illustrating requirements for IGM maintenance instruction frames are identical to those of the MIM; only the content of the volume is different. Partial assessment of the IGM during contractor review and Job Guide validation was covered in 4.2 and 4.3 above. The post-validation check described here is intended to ensure that all tasks that are performed as part of scheduled inspections are covered as part of the IGM.

4.7.2 SAMPLING CONSIDERATIONS. The entire IGM will be checked.

4.7.3 ASSESSMENT STANDARDS. All scheduled inspection tasks for the system (as defined by the inspection workcards for the system) must be included in the IGM.

4.7.4 ASSESSMENT PROCEDURE.

a. For an existing system, check off tasks listed in the inspection workcards against the contents of the IGM. Every task listed in the inspection workcards must be present in the appropriate volume of the IGM. No omissions are permitted.

b. Workcards may not yet be produced for a new system; if they are not, an approved pre-publication draft of the workcards may be used to check IGM contents. IGM assessment should be delayed until the maintenance schedule is approved for workcard publication.

TASK INVENTORY

1.0.00.08.1 Operate Communications Subsystem

1.1 00.01.1 Adjust Receiver
1.1.00.12.1 Troubleshoot Receiver

1 1.01 07.1 Install Amplifier
1.1.01.09.1 Remove Amplifier

1.1.02.07 1 Install Cover, Receiver
1 . 02.09 1 Remove Cover, Receiver

1 1 03 07 1 Install Preamplifier
1 1 03 09 1 Remove Preamplifier

1 1 04 07 1 Install Speaker
1 1 04 09 1 Remove Speaker

1 1 05 07 1 Install Tuner
1 1 05 09 1 Remove Tuner

1 2 00 01 1 Adjust Transmitter
1 2 00 1? 1 Troubleshoot Transmitter

INDEX LISTINGS

A Major Subsystem Listing

Communications Subsystem
Operate 25, 8-1

Receiver (Equipment)
Adjust 25 8-4
Troubleshoot 25, 8-6

Amplifier (LRU)
Install 25, 7 1
Remove 25, 7-6

Cover, Receiver
Install 25, 9 1
Remove 25, 9 5

Preamplifier
Install 25, 9-2
Remove 25, 9-4

Speaker
Install 25, 8 12
Remove 25, 8-15

Tuner
Install 25, 9-7
Remove 25, 9-9

Transmitter
Adjust 25, 6-6
Troubleshoot 25, 6-9

B Equipment Alphabetical Listing

Receiver
Adjust 25, 8-4
Troubleshoot 25, 8-6

Transmitter
Adjust 25, 6 6
Troubleshoot 25, 6 9

C LRU Alphabetical Listing

Amplifier
Install 25, 7 1
Remove 25, 7 6

Cover, Receiver
Install 25, 9 1
Remove 25, 9-

Preamplifier
Install 25, 9-2
Remove 25, 9-4

Speaker
Install 25, 8 12
Remove 25, 8-15

Tuner
Install 25, 9 7
Remove 25, 9-9

Compare each of the three types of Index listings against the TI to ensure that

1 Each Index listing contains all applicable subsystems, equipments, and LRIs listed in the TI

2 Each subsystem, equipment and LRI has all applicable maintenance [illegible]

Figure 4-4. Comparison of the Index Manual with the Task Inventory

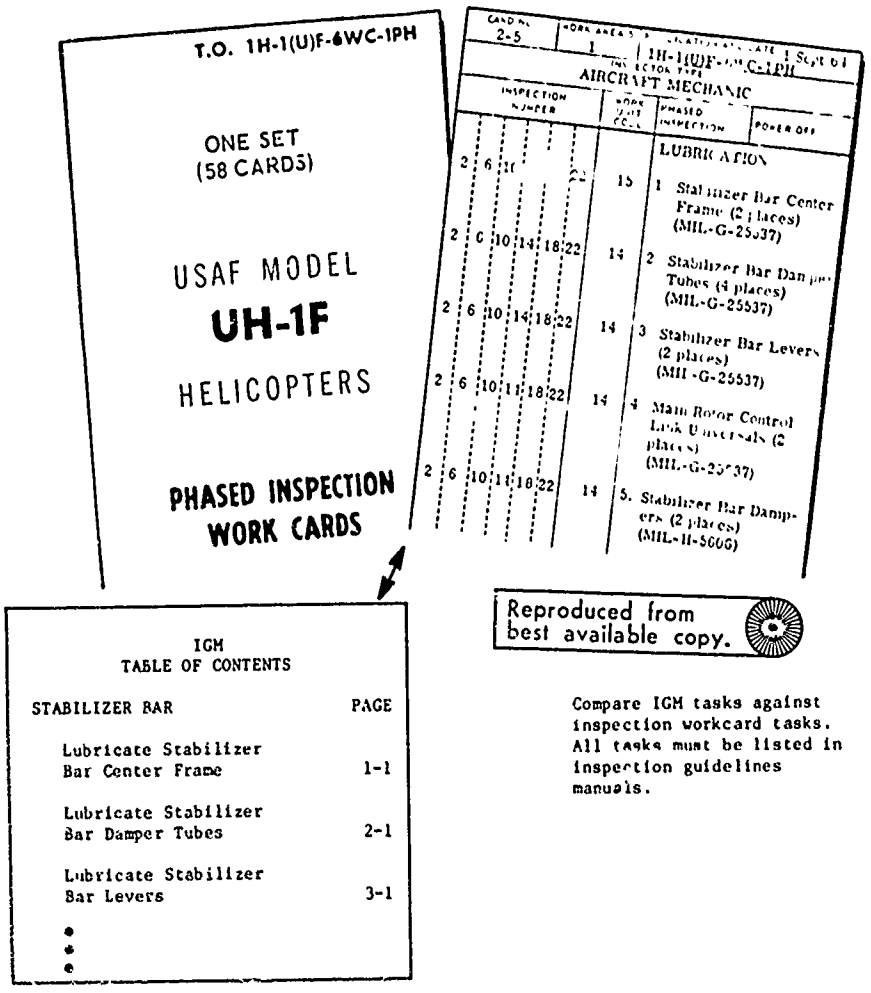

Figure 4-5. Comparison of IGM Task Listings With Inspection Workcard Task Listings

4.7.5 DEFICIENCIES AND CORRECTIVE ACTION.

a. A task may be incorrectly included, omitted, or entered in an inappropriate place in the IGM. Figure 4-5 illustrates the check of IGM material against the inspection workcards.

b. Any omitted, incorrectly included, or inappropriately placed tasks are to be corrected by the contractor.

4.7.6 DOCUMENTATION REQUIREMENTS. Transmit to the contractor a copy of the IGM and a copy of the inspection workcards with tasks checked off and omissions indicated.

4.8 MAINTENANCE SUPPORT INFORMATION MANUAL

4.8.1 DESCRIPTION. The MSIM contains, but is not limited to, the following types of information:

a. General aircraft information (dimensions, stations, access, inspection openings, and walkways).

b. Ground support equipment descriptions.

c. Standard maintenance functions.

d. Other support information whose format may not be compatible with the standard Job Guide presentation.

Ground Support equipment descriptions include applicable notes, cautions, and warnings. Standard maintenance procedures include hookup of electrical power, lock wiring techniques, cotter and rig pin insertions, hydraulic power hookup, and cockpit opening and closing. Other types of information applicable may be lubricant descriptions, torque tolerance tables, applicable standards and specifications, part identification information, tables of measure and conversion equivalents, and local manufacture items. In each case, standards for presentation will be submitted by the contractor to the JPA Manager for consideration. The post-validation coverage check described here is intended to verify that all materials required by 3.3.6 of the draft specification and all TDIMM (Column K7) entries are treated in the MSIMs.

4.8.2 SAMPLING CONSIDERATIONS. The entire MSIM will be checked.

4.8.3 ASSESSMENT STANDARDS.

a. All classes of information required by 3.3.6 of the draft specification must be covered as appropriate.

b. Maintenance support information must be provided for every entry in Column K7 of the TDIMM.

4.8.4 ASSESSMENT PROCEDURE. Assessment procedures for the MSIM will be somewhat different from that of the other volumes. Since the contents of this reference manual may be somewhat diverse, considerable latitude is allowed the contractor in deciding upon applicable format for the presentation of information. Evaluate the presentation mode according to the following criteria:

a. The recommended format should be generally consistent with other Job Guide formats.

b. General aircraft information must include dimensions, stations, access, inspection openings, and walkways.

c. Notes, cautions, and warnings must be written in accordance with Mil-M-38784.

Verify that all applicable items of information required by 3.3.6 of the draft specification are included in the MSIM. Finally, check Column K7 of the TDIMM against the contents of the MSIM. Every unique entry included in Column K7 must be given appropriate coverage in the MSIM.

4.8.5 DEFICIENCIES AND CORRECTIVE ACTION.

a. Omission from the MSIM of any applicable item listed in 3.3.6 of the draft specification or any item required by Column K7 of the TDIMM represents an error.

b. The contractor must justify omission of any item listed in 3.3.6 of the draft specification.

c. The contractor must provide coverage of every item listed in Column K7 of the TDIMM.

4.8.6 DOCUMENTATION REQUIREMENTS. Maintain a record of any items discovered as missing from the MSIM, and transmit this record to the contractor with instructions to provide MSIM coverage for the omitted items.

4.9 JOB GUIDE ASSESSMENT SUMMARY CHECKLIST

See Figure 4-6.

Item Reviewed	When Reviewed	Assessment Procedure	Item Sample	How Assessed		
				Format	Coverage	Validity
Maintenance Instruction Frames (MIM, IM, MSIM)	Less than 25% draft complete. Preliminary Format and Content Review	Page 31	10% of contractor review sample	Compare with 3.3 of draft specification	No check	Compare with TDIMM, TSDD, TFTU
All Job Guide Material	During Job Guide Validation	Page 41	100%	No check	No check	Enforce contractor following of validation plan in Chapter 6 of AFSC DH 1-3
All Job Guide Material	Post-Validation Coverage Check	Page 44, 45, 46, and 50	100%	No check	Compare with TI, TDIMM, and requirements of 3.3 of draft specification	All items must have passed validation

Figure 4-6. Job Guide Assessment Summary Checklist

SECTION V

FULLY PROCEDURALIZED TROUBLESHOOTING AIDS

5.1 FULLY PROCEDURALIZED TROUBLESHOOTING AIDS ASSESSMENT OVERVIEW

5.1.1 DESCRIPTION. FPTA extend the Job Guide concept to troubleshooting tasks. They provide complete, step-by-step information on how to carry out troubleshooting procedures. The FPTA are designed to isolate all possible malfunctions at a given level of maintenance.

FPTA production begins with the development of a list of Components and Failure Modes. This list shows all the ways in which all end items in the TI can fail. A List of Functions is prepared for each functional unit within a subsystem, and for each function a list is prepared of the ways in which the function can fail.

The next product is built upon the List of Function Failures. For each functional unit, a matrix is created with function failures on one axis, and all possible indications of a malfunction on the other axis. In the cells are descriptions of the malfunction indications produced by the failures. Each distinctly different pattern of failure indications in the matrix constitutes a malfunction symptom. All malfunction symptoms are described on a list of Malfunction Symptoms.

A Component Block Diagram is prepared for each malfunction symptom in the list. This block diagram shows all equipment end items which can be repaired or replaced, and whose failure could produce that malfunction symptom. Next, an Action Tree is prepared for each malfunction symptom. The Action Tree is a diagram that shows an efficient sequence of steps that will identify any possible malfunctioning component. When all of the Action Trees have been completed, a Checkout Procedure is prepared. The Checkout Procedure links together all of the Action Trees for a subsystem.

When a Checkout Procedure and its related Action Trees are prepared, they undergo a Reading and Tolerance (R&T) determination which has a twofold purpose: R&T information for the troubleshooting checkpoints is obtained, and the Action Trees are validated.

Finally, the completed Action Trees and Checkout Procedures are converted to Job Guide format to produce the FPTA volumes. At least one volume will be prepared for each subsystem.

5.1.2 ASSESSMENT. The JPA Manager's assessment of FPTA intermediate products is intended to ensure that the contractor is following the development procedure required by 3.4 of the draft specification, and

that the products meet specified format and content requirements. In most cases, practical constraints will prevent or limit the extent to which the JPA Manager can assess the validity or technical accuracy of the products. There are generally no pre-existing standards with which to compare the intermediate products. In the case of the Action Trees, there may be a number of possible acceptable solutions to a given problem. Assessment of an Action Tree prior to validation would involve either evaluating the writer's choice of each checkpoint (i.e., tracing and evaluating the sequence of steps the writer followed in generating the tree), or independently generating an Action Tree to solve the same problem, and then comparing the two (which could still leave the JPA Manager with the problem of deciding which of two acceptable Action Trees were "best"). In assessment of the List of Components and Failure Modes, and the List of Functions and Function Failures, it is suggested that the JPA Manager engage a "hardware expert" consultant (available within the Air Force) who is knowledgeable in the subject equipment to review each list and comment upon its validity and completeness. For all other situations in which validity assessment options require the JPA Manager to pit his expert's technical judgments against those of the contractor, only format and coverage checks are recommended. Validity assessment is then deferred until actual validation of the Action Trees (the R&T determination).

5.2 LIST OF COMPONENTS AND FAILURE MODES

5.2.1 DESCRIPTION. The List of Components and Failure Modes contains the following four classes of information:

a. A list of every component with an associated "remove" task in the TI.

b. Manufacturer's part number.

c. Federal stock number.

d. Possible failure modes associated with each end item.

5.2.2 SAMPLING CONSIDERATIONS. The entire List of Components and Failure Modes will be examined.

5.2.3 ASSESSMENT STANDARDS. The List of Components and Failure Modes must have a component entry for every item on the TI with an associated "remove" task. Each item must have a corresponding part number and stock number, and at least one listed failure mode. At the JPA Manager's option, the hardware expert consultant may review the List of Components and Failure Modes and comment upon the validity and completeness of the listed failure modes.

5.2.4 ASSESSMENT PROCEDURE.

a. Compare the list of components with the TI. Check that each end item on the TI which has an associated "remove" task appears as a component.

b. Verify that there is an entry in the Part Number column for every entry in the component column.

c. Verify that there is an entry in the Stock Number column for every entry in the component column.

d. Verify that there is at least one entry in the Failure Mode column for every entry in the component column.

e. Obtain independent evaluation of the List of Components and Failure Modes from the hardware expert consultant.

5.2.5 DEFICIENCIES AND CORRECTIVE ACTION. Deficiencies can ear as "remove" tasks in the TI whose hardware items are not reflected in the component column of the List of Components and Failure Modes or missing entries in the Part Number, Stock Number, or Failure Modes columns. The contractor will occasionally be able to justify temporary omissions from the Part Number and Stock Number columns on the basis of inadequate available documentation, but there is no acceptable justification for omissions from the Failure Modes column. Require the contractor to correct any failure mode omissions before further work on FPTA is conducted, and to correct part number and stock number omissions before final approval of the List of Components and Failure Modes is given.

5.2.6 DOCUMENTATION REQUIREMENTS. Record any detected errors of omission and transmit this record to the contractor.

5.3 LIST OF FUNCTIONS AND FUNCTION FAILURES

5.3.1 DESCRIPTION. This list describes each function performed by every LRI in the system, and describes all ways in which each function can fail.

5.3.2 SAMPLING CONSIDERATIONS. Examine the entire List of Functions and Function Failures.

5.3.3 ASSESSMENT STANDARDS.

a. Every LRI (every hardware item with a "remove" task in the TI) must be listed.

b. There must be at least one function listed for each LRI.

c. There must be at least one function failure listed for each function.

d. At the JPA Manager's option, the hardware expert consultant may review the List of Functions and Function Failures and may comment upon the validity and completeness of the listed functions and failure modes.

5.3.4 ASSESSMENT PROCEDURE.

a. Check the List of Functions against the TI and verify that each hardware item with a "remove" task in the TI is listed on the List of Functions.

b. Verify that at least one function is listed for each LRI.

c. Verify that at least one function failure is listed for each listed function.

d. Obtain independent evaluation of the listed functions and function failures from the hardware expert consultant.

5.3.5 DEFICIENCIES AND CORRECTIVE ACTION. Possible deficiencies are omission of LRIs, functions, or function failures. Require the contractor to correct all omissions before approving the List of Functions and Function Failures.

5.3.6 DOCUMENTATION REQUIREMENTS. Record any detected omissions and transmit this record to the contractor.

5.4 INDICATIONS OF FUNCTION FAILURES (FUNCTION FAILURE BY CONTROL AND DISPLAY MATRIX)

5.4.1 DESCRIPTION. The first step in the preparation of a list of directly observable indications that accompany each function failure is the preparation of the Function Failure by Control and Display Matrix, in accordance with Section 6D of Chapter 6 of AFSC DH 1-3. A separate matrix is prepared for each functional unit in a subsystem. Column headings in the matrix are the function failures from the approved list of function failures, and row headings are descriptions or names of all indications that could betray the presence of a malfunction in the functional unit. Typical kinds of row headings are: motor noise; smells; blown fuses; vibration; or named indicators, test meters, and panel lights.

5.4.2 SAMPLING CONSIDERATIONS. Examine the Function Failure by Control and Display Matrix for each functional unit in the subsystem.

5.4.3 ASSESSMENT STANDARDS

a. Format must be in accordance with Chapter 6 of AFSC DH 1-3.

b. Column headings must include all function failures for the functional units that are contained in the approved List of Functions and Function Failures.

c. The matrix must contain at least one cell entry (indication of failure) for every listed function failure. The validity or completeness of the matrix entries cannot feasibly be checked at this time.

5.4.4 ASSESSMENT PROCEDURE.

a. Verify that one matrix is prepared for each functional unit in a subsystem.

b. Verify that the format is as specified in Chapter 6 of AFSC DH 1-3 (function failures as column headings, and failure indications as row headings).

c. Check the function failures (column headings) in the matrix against the approved List of Function Failures. Each entry in the List of Function Failures for that functional unit must also appear in the matrix.

d. Verify that there is at least one cell entry for every function failure in the matrix.

5.4.5 DEFICIENCIES AND CORRECTIVE ACTION.

a. Possible deficiencies are omission from the matrix of function failures that appear on the approved list of function failures, or omission of cell entries for any listed function failure.

b. Require the contractor to correct all omissions before approving the matrix.

5.4.6 DOCUMENTATION REQUIREMENTS. Record all detected omissions and transmit this record to the contractor.

5.5 LIST OF MALFUNCTION SYMPTOMS

5.5.1 DESCRIPTION. This list includes each distinctly different set of detectable indications of function failure, and is derived from the Function Failure by Control and Display Matrix.

5.5.2 SAMPLING CONSIDERATIONS. Examine the entire list of malfunction symptoms.

5.5.3 ASSESSMENT STANDARDS. Every unique malfunction symptom derived from the Function Failure by Control and Display Matrix must be listed with its associated function failures.

5.5.4 ASSESSMENT PROCEDURES.

a. Identify each unique pattern of malfunction indicators on the Function Failure by Control and Display Matrix and verify that a verbal description of each unique pattern appears in the Malfunction Symptom column of the List of Malfunction Symptoms.

b. Verify that each function failure associated with a given unique malfunction indicator pattern is listed opposite the description of that pattern in the List of Malfunction Symptoms.

c. Figure 5-1 provides a graphic example of the transformation between the Function Failure by Control and Display Matrix and the List of Malfunction Symptoms. In the pictured example, the first entry in the List of Malfunction Symptoms represents a unique indicator pattern that appeared twice in the matrix; the same pattern of row entries appeared in two dif- columns. A verbal statement of the pattern became the malfunction symptom statement in the List of Malfunction Symptoms. Listed opposite the malfunction symptom are the two function failures, either of which could have produced that symptom.

5.5.5 DEFICIENCIES AND CORRECTIVE ACTION. Possible deficiencies are omission or incorrect identification of a malfunction symptom, or omission of a function failure for a malfunction symptom. Require the contractor to correct all such deficiencies before continuing FPTA development.

5.5.6 DOCUMENTATION REQUIREMENTS.

a. Record all detected deficiencies and transmit the record to the contractor.

5.6 COMPONENT BLOCK DIAGRAM

5.6.1 DESCRIPTION. A Component Block Diagram is prepared for each malfunction symptom in the List of Malfunction Symptoms. The Component Block Diagram is a block diagram that shows all equipment end items that can be repaired or replaced at the appropriate level of maintenance that could, by their failure, produce that malfunction symptom.

5.6.2 SAMPLING CONSIDERATIONS. Examine all Component Block Diagrams.

5.6.3 ASSESSMENT STANDARDS.

a. Each malfunction symptom must have an associated Component Block Diagram.

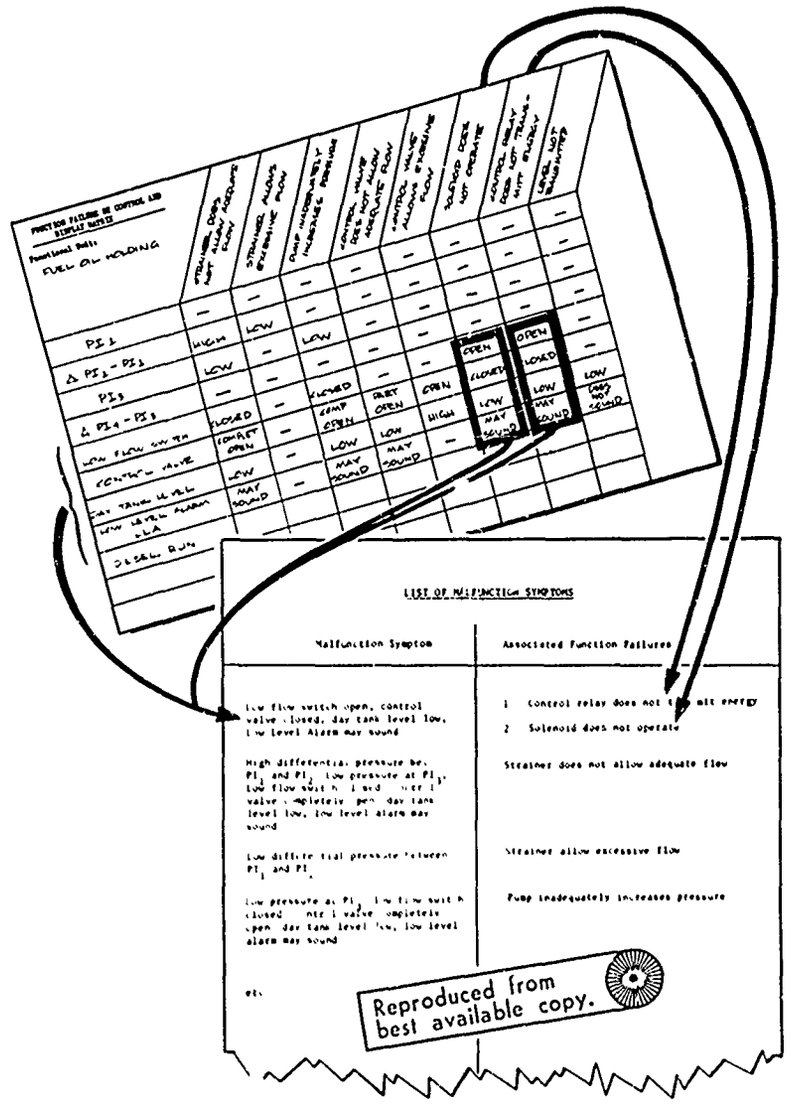

Figure 5-1. Example of Transformation from Function Failure by Control and Display Matrix to the List of Malfunction Symptoms

b. Every equipment end item whose failure could produce the malfunction symptom must be depicted in the Component Block Diagram.

5.6.4 ASSESSMENT PROCEDURE.

a. On the approved List of Malfunction Symptoms, locate the malfunction symptoms for which the Component Block Diagram was prepared and record the function failure associated with that malfunction symptom.

b. On the approved List of Functions and Function Failures, locate each of the function failures recorded in step a, and record the function associated with each of the failures.

c. For each of the functions recorded in step b, record the associated LRI as determined from the List of Functions and Function Failures.

d. Verify that every LRI listed in step c is depicted on the Component Block Diagram, and that no other LRIs appear on the diagram.

5.6.5 DEFICIENCIES AND CORRECTIVE ACTION. Possible deficiencies are omission of a necessary LRI from the diagram, or inclusion on the diagram of an LRI whose failure cannot contribute to the malfunction symptom. All omissions or erroneous inclusions must be corrected by the contractor before an Action Tree is constructed, using the Component Block Diagram as a base.

5.6.6 DOCUMENTATION REQUIREMENTS. Record any detected deficiencies and transmit the record to the contractor.

5.7 ACTION TREES

5.7.1 DESCRIPTION.

a. An Action Tree is a diagram that represents the sequence of troubleshooting steps to be taken in identifying a malfunctioning component. An Action Tree is prepared for each malfunction symptom within a subsystem.

b. The Action Tree consists of boxes which indicate forms of troubleshooting activities and interconnections between boxes, which represent action flow. There are four types of boxes used in Action Trees:

1. The summary box is the origin of the Action Tree, and contains a list of the equipment control settings and operational acts that are prerequisites to observation of the malfunction symptom. The Summary box also contains a statement of the malfunction symptom.

2. The Procedural box contains a linear sequence of steps that describes ways to modify equipment conditions by changing switch settings, or by other operational acts. These steps serve to precondition equipment to permit specified tests which are given in subsequent Test/Decision boxes. "Access" tasks and "remove" and "install" activities may be found in Procedural boxes.

3. The Test/Decision box is found at a branching location within the Action Tree. The purpose of the Test/Decision box is to specify a diagnostic test that will subdivide a chain of suspected LRIs in such a way as to expand the set of components known to be "good". These tests are used to subdivide until, ultimately, a repair or replace action is required.

4. The Repair or Replace box is found at the end of each Action Tree branch. It states the name of a malfunctioning item and the repair or replace action necessary to restore the hardware to proper operation.

c. A Checkout Procedure is prepared to link together all the Action Trees for a subsystem. The purposes of the Checkout Procedure are:

1. To systematically manipulate the functional unit and perform measurements that allow observation of any malfunction symptom present.

2. To reference the appropriate Action Tree for troubleshooting.

3. To determine that the system is completely operational after a fault has been identified and corrected.

The Checkout Procedure [illegible] composed of Test/Decision, Procedural, and Repair or Replace boxes [illegible] Checkout Procedure also contains Malfunction Symptom boxes which are similar to the Summary box described above, except that t[illegible] contain references to Action Trees.

5.7.2 SAMPLIN[illegible] CONSIDERATIONS. Examine all Action Trees.

5.7.3 ASSESS[illegible] STANDARDS.

a. An Action Tree must be prepared for each approved Component Block Diagram.

b. Each failure mode of each component on the List of Components and Failure Modes must appear in a Repair or Replace box in an Action Tree or Checkout Procedure.

c. All Action Trees for a subsystem must be referenced in the subsystem Checkout Procedure.

d. In the special case in which the malfunction symptom can be produced by only one possible LRI failure, the Action Tree is reduced to two parts: a statement of malfunction symptom, and a Repair or Replace box. In such a case, the Repair or Replace box will appear directly in the Checkout Procedure rather than reference a one-step Action Tree.

5.7.4 ASSESSMENT PROCEDURE.

a. Verify that an Action Tree (even if it is only one step) has been produced for every approved Component Block Diagram.

b. Verify that every Action Tree for a subsystem is treated in the subsystem Checkout Procedure (either as a reference to an Action Tree or as a Repair or Replace box).

c. On the approved List of Components and Failure Modes for the subsystem, check off each failure mode represented by a Repair or Replace box in all Action Trees (and/or the Checkout Procedure) for the subsystem. Each failure mode of each component in the subsystem must appear in a Repair or Replace box in the Checkout Procedure and/or one of the Action Trees for that subsystem.

5.7.5 DEFICIENCIES AND CORRECTIVE ACTION. Possible deficiencies are:

a. Failure to prepare Action Trees for every approved Component Block Diagram.

b. Failure to include every subsystem Action Tree in the subsystem Checkout Procedure.

c. Failure of the subsystem checkout and Action Trees to result in a direction to Repair or Replace for every failure mode of every component in the List of Components and Failure Modes for that subsystem.

Require the contractor to correct any detected deficiencies.

5.7.6 DOCUMENTATION REQUIREMENTS. Record any detected deficiencies and transmit the record to the contractor.

5.8 READINGS AND TOLERANCES (ACTION TREE VALIDATION)

5.8.1 DESCRIPTION. The R&T process provides two types of information needed to complete the Action Trees. First, it empirically determines the required readings to be entered in the Test/Decision boxes. Second, it validates the Action Trees by verifying that every component failure mode produces the predicted malfunction symptom. Because this process is the only planned validation of the FPTA, the JPA Manager's confidence in the validity of the FPTA will be directly proportional to the extent of his observation of the R&T activities and enforcement of requirements of 3.4.13 of the draft specification.

5.8.2 SAMPLING CONSIDERATIONS. As with other JPA product validation, the JPA Manager should observe all R&T activities.

5.8.3 ASSESSMENT STANDARDS. The contractor must perform the R&T data collection activity in accordance with 3.4.13 of the draft specification, and Section 6D of Chapter 6 of AFSC DH 1-3 or as directed by the procuring activity. The contractor must record R&T data in the format presented in the draft specification, Figure 17.

5.8.4 ASSESSMENT PROCEDURE.

a. As the R&T collection activity progresses, ensure that the contractor follows the development process outlined in 3.4.13 of the draft specification and that he records his findings on the required form.

b. Ensure that the R&T data are collected empirically for every Test/Decision box in every Action Tree. Do not permit the contractor to use "nominal" values or design tolerances suggested by engineering data if not previously agreed to by the procuring activity.

c. When R&T is complete, check the R&T data collection forms against the Action Trees. Verify that entries appear on the forms for every Test/Decision box in the associated Action Tree.

d. Require the contractor to document, in writing, the actual correction of any problems identified during the R&T activity. Require the contractor to implement and validate the corrections before producing the FPTA in final format.

5.8.5 DEFICIENCIES AND CORRECTIVE ACTION.

a. The contractor must not deviate from the R&T process as specified in 3.4.13 of the draft specification.

b. No Test/Decision box may be omitted from the R&T collection activity. Test/Decision boxes that were missed during the R&T process must be done in the same manner as other boxes, and the results entered both in the Action Tree and on the R&T data collection form.

c. The R&T activity is not complete until every Action Tree has been completely validated.

5.8.6 DOCUMENTATION REQUIREMENTS. Record any detected deficiencies and transmit the record to the contractor.

5.9 FULLY PROCEDURALIZED TROUBLESHOOTING AID ASSESSMENT SUMMARY CHECKLIST

See Figure 5-2.

Item Reviewed	When Reviewed	Assessment Procedure	Item Sample	How Assessed		
				Format	Coverage	Validity
List of Components and Failure Modes	As completed by subsystem	Page 54	100%	Compare with 3.4.5 of draft specification	Compare with TI	Expert judgment (optional)
List of Functions and Function Failures	same	Page 54	100%	Compare with 3.4.6 and 3.4.7 of draft specification	same	same
Function Failure by Control and Display Matrix	same	Page 56	100%	Compare with Chapter 6 of AFSC DH 1-3	same	No check
List of Malfunction symptoms	same	Page 57	100%	Compare with 3.4.9 of draft specification	Compare with Function Failure by Control and Display Matrix	Reformat of Function Failure by Control and Display Matrix
Component Block Diagram	same	Page 59	100%	Compare with 3.4.10 of draft specification	Compare with List of Malfunction Symptoms, List of Functions and Function Failures	No check
Action Trees and Checkout Procedures	same	Page 61	100%	Compare with 3.4.11 and 3.4.12 of draft specification	Compare with Component Block Diagram, List components and Failure Modes	No check
R&T (Action Tree Validation)	During R&T	Page 62	100%	No check	No check	Enforce contractor performance of R&T procedure in 3.4.13 of draft specification

Figure 5-2. Fully Proceduralized Troubleshooting Aid Assessment Summary Checklist

APPENDIX A

TIM CONTRACTOR VALIDATION PROCEDURE

1. TIM PREPARATION

1.1 Prepare complete generation breakdown.

1.2 Prepare matrix.

1.3 Fill cells as indicated in provisioning documents, maintenance concept documents, or other appropriate documentation.

2. NEW SYSTEM TIM VALIDATION

2.1 Divide TIM into subsystems and assign subsystems to validation team members who are acquainted with maintenance of the kind of hardware represented by the subsystems.

2.2 Interview personnel familiar with each subsystem to validate cell entries.

a. Request cell-by-cell confirmation of task or non-task. For example, you might ask, "Do you adjust the _____ (name the hardware item)?" Keep in mind the possible T_L or T_H entries and validate as indicated by answers to questions and good logic.

2.3 Submit validated TIM segments as completed to the Air Force JPA Manager for assessment.

2.4 Start work on the Task Inventory.

3. EXISTING SYSTEM TIM VALIDATION

3.1 Obtain approval for TIM from the AMA which provisions the system. If there is more than one AMA for the system, divide the TIM as appropriate and request confirmation of the completed TIM segment which applies from each AMA.

3.2 While still working with the AMA for confirmation of your TIM, determine what personnel in the field are to be used for field validation. It will be necessary to determine what subsystems, maintenance levels, and maintenance tasks are attended to by which personnel at the site of TIM field validation. Divide the AMA-confirmed TIM according to the personnel whom you have determined to do the maintenance tasks.

3.3 Make up your field validation team, taking into consideration the number of people needed to completely cover the TIM within the time allotted for validation. Team members assigned to validate TIM segments determined in step 3.2 should be persons acquainted with the maintenance of the kind of hardware items or subsystem to which they are assigned. Personnel must also be familiar with the TIM format and symbol usage.

3.4 Brief your validation team with information about:

a. The field validation procedure.

b. The time scheduling.

c. Questions to ask field personnel.

d. Records needed.

1. Answers to questions.

2. Differences between field practice and the cell entries already on the TIM.

3. Resolution of differences if made in the field.

4. Verification of cell-by-cell validation.

3.5 Have each member of the field validation team perform the following procedure:

a. Utilize a TIM with cell entries made as determined by existing maintenance documentation, and approved by the appropriate AMA(s).

b. Enter differences in field practice and the approved maintenance concept entry by marking the new symbol over the old within the appropriate cells.

c. Use a questioning procedure. For <u>each</u> hardware item and maintenance, ask the respondent:

"Do you _____ the _____?"
maintenance function hardware item

If the answer is "yes," enter a T (unless one is already there).

If the cell entry is T_H or T_L, question the respondent to determine if his "yes" is actually in reference to the function being done on a different level of equipment. He may volunteer the information with his answer (e.g., "yes, but it's done as part of _____").

If the respondent answers "no" to a question, request more information with such questions as:

"Why isn't it done?"

"Is it done by someone (or somewhere) else?"

"Can it be done?"

Note the answers to these questions to indicate that it is not done because, for example:

"It's not applicable to that item."

"Parts or equipment are not available in the field to do that maintenance function."

Questioning a "no" answer is especially important if the cell of the TIM already contains a T entry. In these cases, a reconciliation between field practice and maintenance concept must be made. In addition, a respondent may answer "no" incorrectly for various reasons. Further questioning will usually clarify such cases.

4. RECONCILING DIFFERENCES BETWEEN FIELD PRACTICE AND THE DRAFT TIM

4.1 In system used by a foreign government:

a. Request a meeting with appropriate government representatives.

b. Point out differences and determine their desires on the matter.

c. Document resolution of differences.

4.2 In system used by USAF:

a. Request meeting including AMA representatives and representatives of using command.

b. Present differences for resolution.

c. Document resolution of difference.

4.3 Resolution of differences between field practices and maintenance concept concludes field validation. The TIM is ready for Air Force acceptance.

5. TIM ACCEPTANCE BY AIR FORCE JPA MANAGER

5.1 Some TIM segments may be submitted for acceptance prior to other segments if AMA approval and field validation is completed on them.

5.2 Documentation to be made available to the JPA Manager:

a. Documents used to produce the TIM.

b. Approval documentation from the AMA(s).

c. Documentation of field validation including resolution of differences.

INDEX

abbreviations, list of viii

action trees 59
- assessment procedures 61
- assessment standards 60
- checklists 63
- deficiencies and corrective actions 61
- description 59-60
- documentation requirements 61
- sampling considerations 60
- validation
  - (see readings and tolerances)

appendix
- A, TIM contractor validation procedure 64-66

assessment overview
- fully proceduralized troubleshooting aids 51-53
- job guide 41
- maintenance task analysis 31

assessment procedures
- fully proceduralized troubleshooting aids
  - action trees 59-63
  - component block diagram 57
  - function failure by control and display matrix 55
  - list of components and failure modes 53
  - list of functions and function failures 54
  - list of malfunction symptoms 56
  - readings and tolerances 61
- job guides
  - index manual 45
  - inspection guidelines manual 47
  - maintenance instruction manual 44
  - maintenance support information manual 49
  - preliminary format and content review 31-40
  - validation 40-43
- maintenance task analysis
  - task description index and management matrix 26-29
  - task identification matrix 18
  - task inventory 16
  - task-step data details 17
  - test equipment and tool use form 16

assessment standards
- fully proceduralized troubleshooting aids
  - action trees 59
  - component block diagram 57

assessment standards, continued
    function failure by control and display matrix 55
    list of components and failure modes 52-53
    list of functions and function failures 54
    list of malfunction symptoms 56
    readings and tolerances 61
  job guides
    index manual 45
    inspection guidelines manual 47
    maintenance instruction manual 44
    maintenance support information manual 49
    preliminary format and content review 31
    validation 40
  maintenance task analysis
    task description index and management matrix 17
    task identification matrix 16
    task inventory 16
    task-step data details 17
    test equipment and tool use form 16

basic concepts 13

checklists
  fully proceduralized troubleshooting aids 63
  job guides 51
  maintenance task analysis 30

component block diagram 57
  assessment procedures 59
  assessment standards 56-60
  checklists 63
  deficiencies and corrective actions 59
  description 57
  documentation requirements 59
  sampling considerations 57

contents, table of v-vi

contractor validation procedure 9-12
  TIM (Appendix A) 64

data management 2-6

deficiencies and corrective action
  fully proceduralized troubleshooting aids
    action trees 61
    component block diagram 57
    function failure by control and display matrix 55
    list of components and failure modes 53
    list of functions and function failures 54

deficiencies and corrective action, continued
list of malfunction symptoms 58
readings and tolerances 61
job guides
index manual 45
inspection guidelines manual 47
maintenance instruction manual 44
maintenance support information manual 49
preliminary format and content review 40
validation 43
maintenance task analysis
task description index and management matrix 26
task identification matrix 18
task inventory 16
task-step data details 17
test equipment and tool use form 16

description
fully proceduralized troubleshooting aids 52
action trees 59-60
component block diagram 57
function failure by control and display matrix 55
list of components and failure modes 53
list of functions and function failures 54
list of malfunction symptoms 56
readings and tolerances 61
job guides
general 31
index manual 45
inspection guidelines manual 47
maintenance instruction manual 44
maintenance support information manual 49
preliminary format and content review 31-40
validation 40-43
maintenance task analysis
task description index and management matrix 26-29
task identification matrix 18
task inventory 16
task-step data details 17
test equipment and tool use form 16

documentation requirements 9-12
fully proceduralized troubleshooting aids
action trees 59
component block diagram 57
function failure by control and display matrix 55
list of components and failure modes 53
list of functions and function failures 54
list of malfunction symptoms 56
readings and tolerances 61

documentation requirements, continued
job guides
index manual 45
inspection guidelines manual 47
maintenance instruction manual 44
maintenance support information manual 49
preliminary format and content review 40
validation 43
maintenance task analysis
task description index and management matrix 26-29
task identification matrix 18
task inventory 17
task-step data details 17
test equipment and tool use form 16

figure (illustration)
1-1, JPA development process as described in this handbook 7
2-1, Sample matrix of projected completion dates for all products 11
2-2, Sample schedule of product completion dates 12
3-1, Sample TIM showing correct format 18
3-2, Task analysis assessment summary checklist 30
4-1, Examples of proper and improper level of detail for locator illustration 36
4-2, Examples of adequate and extraneous detail in a specific illustration 37-39
4-3, Suggested validation observation form 42
4-4, Comparison of the index manual with the task inventory 47
4-5, Comparison of IGM task listings with inspection workcard task listings 48
4-6, Job guide assessment summary checklist 51
5-1, Example of transformation from function failure by control and display matrix to the list of malfunction symptoms 58
5-2, FPTA assessment summary checklist 63

fully proceduralized troubleshooting aids 4-6, 52-63
action trees 59
assessment overview 52
assessment procedures 52-56, 58-63
assessment standards 52-56, 57, 60, 62
checklists 63
component block diagram 57
deficiencies and corrective action 54, 56, 59, 61, 62
description 51-56, 57-61
documentation requirements 54, 56, 59, 61-62
indications of function failures (function failure by control and display matrix) 54-55
list of components and failure modes 52
list of functions and function failures 53
list of malfunction symptoms 56
readings and tolerances (action tree validation) 61
sampling considerations 55-56, 57, 60, 62

function failure by control and display matrix 55-56
assessment procedures 54
assessment standards 54
checklists 63
deficiencies and corrective actions 56
description 54
documentation requirements 56
sampling considerations 54
illustration
(see figure)

index to job guides 45
assessment procedures 45
assessment standards 45
checklists 51
deficiencies and corrective actions 45
description 45
documentation requirements 45
sampling considerations 45

indications of function failures
(see function failure by control and display matrix)

inspection guidelines manual 47-49
assessment procedures 47
assessment standards 47
checklists 51
deficiencies and corrective actions 47-49
description 47
documentation requirements 50
sampling considerations 47

introduction/orientation 1-4

job guides 4, 5, 7, 31-51
assessment overview 31
assessment procedure 41, 44, 45, 47, 50
assessment standards 32, 44, 45, 47, 49
checklists 51
deficiencies and corrective actions 43, 45, 47, 49, 50
documentation requirements 43, 45, 47, 49, 50
index to job guides 45-47
inspection guidelines manual 47-49
maintenance instruction manuals 44-45
maintenance support information manual 49-50
preliminary format and content review 31-41
sampling considerations 31, 44, 47, 49
validation 40

JPA review/assessment 2-15

list of abbreviations viii

list of components and failure modes 53-54
assessment procedures 54
assessment standards 53-54
checklists 63
deficiencies and corrective actions 54
description 53
documentation requirements 54
sampling considerations 53

list of functions and function failures 54
assessment procedures 54
assessment standards 54
checklists 63
deficiencies and corrective actions 54
description 53
documentation requirements 54
sampling considerations 54

list of malfunction symptoms 56
assessment procedures 56
assessment standards 56
checklists 63
deficiencies and corrective actions 56
description 56
documentation requirements 56
sampling considerations 56

maintenance instruction manuals 44-45
assessment procedures 44
assessment standards 44
checklists 51
deficiencies and corrective actions 45
description 44-45
documentation requirements 45
sampling considerations 45

maintenance support information manual 49-50
assessment procedures 50
assessment standards 49
checklists 51
deficiencies and corrective actions 50
description 49
documentation requirements 50
sampling considerations 49

maintenance task analysis 5, 7, 16-30
assessment overview 16-17
assessment procedures 19-23

maintenance task analysis, continued
assessment standards 19, 21, 23, 25, 27
checklists 30
deficiencies and corrective actions 20, 22, 24, 26
description 17, 21, 24
documentation requirements 21, 22, 24, 26
personnel recommendations 17
sampling considerations 19, 21, 23, 25, 26
task description index and management matrix 16, 17, 26-29
task identification matrix 16-21
task inventory 16, 21-22
task-step data details 17, 22-24
test equipment and tool use form 16, 24-26

personnel recommendations
maintenance task analysis 17

planning 9-12

post-validation coverage check (job guides) 43-44

preliminary format and content review 31
assessment procedure 31-40
assessment standards 31-34
checklists 51
deficiencies and corrective actions 43
description 31
documentation requirements 43
sampling considerations 31

preparation 9

readings and tolerances (action tree validation) 61-62
assessment procedures 61
assessment standards 60
checklists 63
deficiencies and corrective actions 63
description 59
documentation requirements 61
sampling considerations 60

recordkeeping
(see documentation requirements)

review/assessment
(see JPA review/assessment)

sampling considerations
fully proceduralized troubleshooting aids
action trees 59
component block diagram 57
function failure by control and display matrix 55

sampling considerations, continued
list of components and failure modes 53
list of functions and function failures 54
list of malfunction symptoms 56
readings and tolerances 61
job guides
index manual 46
inspection guidelines manual 47
maintenance instruction manual 44
maintenance support information manual 49
preliminary format and content review 31
validation 40
maintenance task analysis
task description index and management matrix 16, 17, 26-29
task identification matrix 16-21
task inventory 16, 21-22
task-step data details 17, 22-24
test equipment and tool use form 16, 24-26

schedules 10-12

summary 14-15

table
1-1, JPA products, subproducts, and intermediate products 5
3-1, Types of data entries 28
4-1, Review outline 32-34

task analysis
(see maintenance task analysis)

task description index and management matrix 16, 17, 26-29
assessment procedures 19-23
assessment standards 27
checklists 30
deficiencies and corrective actions 30
description 26
documentation requirements 26-30
sampling considerations 26

task identification matrix 16, 17-21
assessment procedures 17
assessment standards 19-20
checklists 30
deficiencies and corrective actions 20
description 17-18
documentation requirements 21
sampling considerations 19
validation
contractor (Appendix A)
JPA manager 19

task identification matrix, continued
task inventory 16, 21-22
assessment procedures 21
assessment standards 21
checklists 30
deficiencies and corrective actions 22
description 21
documentation requirements 22
sampling considerations 21
task-step data details 16, 17, 22-24
assessment procedures 24
assessment standards 23
checklists 30
deficiencies and corrective actions 24
description 22-23
documentation requirements 24
sampling considerations 23
test equipment and tool use form 16, 17, 24-25
assessment procedures 24-25
assessment standards 25
checklists 30
deficiencies and corrective actions 26
description 24
documentation requirements 26
sampling considerations 25

validation
fully proceduralized troubleshooting aids 52
job guides 40-43
maintenance task analysis 2-2
(see TIM contractor validation procedure, Appendix A)
verification 13-14
(see JPA review/assessment)