AD 743746

# NAVAL POSTGRADUATE SCHOOL

## Monterey, California

DDC
RECEIVED
A

# THESIS

An Integer Programming Model for Constrained

Optimization of System Effectiveness

with Particular Application to the P3-C

by

Frederick John Schineller, III

Thesis Advisor: W. M. Woods

March 1972

Reproduced by
NATIONAL TECHNICAL
INFORMATION SERVICE
Springfield, Va. 22151

*Approved for public release; distribution unlimited.*

Unclassified

Security Classification

## DOCUMENT CONTROL DATA - R & D

(Security classification of title, body of abstract and indexing annotation must be entered when the overall report is classified)

1. ORIGINATING ACTIVITY (Corporate author)
Naval Postgraduate School
Monterey, California 93940

2a. REPORT SECURITY CLASSIFICATION
Unclassified

2b. GROUP

3. REPORT TITLE
An Integer Programming Model for Constrained Optimization of System Effectiveness with Particular Application to the P3-C

4. DESCRIPTIVE NOTES (Type of report and inclusive dates)
Master's Thesis; March 1972

5. AUTHOR(S) (First name, middle initial, last name)
Frederick J. Schineller, III

6. REPORT DATE
March 1972

7a. TOTAL NO. OF PAGES
28

7b. NO. OF REFS
1

8a. CONTRACT OR GRANT NO.

b. PROJECT NO.

c.

d.

9a. ORIGINATOR'S REPORT NUMBER(S)

9b. OTHER REPORT NO(S) (Any other numbers that may be assigned this report)

10. DISTRIBUTION STATEMENT
Approved for public release; distribution unlimited.

11. SUPPLEMENTARY NOTES

12. SPONSORING MILITARY ACTIVITY
Naval Postgraduate School
Monterey, California 93940

13. ABSTRACT

A model is developed for solving the optimization problem created when a manufacturer presents management with numerous proposed modifications which will improve the system effectiveness of an existing system. The optimization is constrained by the physical limitations of the system and by a limited budget. System effectiveness is defined and discussed in detail for an anti-submarine aircraft system with reliability considered the single most important factor. The model transforms the problem into an integer programming problem, and a numerical example is provided to demonstrate the versatility of this model.

DD FORM 1 NOV 65 1473 (PAGE 1)

S/N 0101-807-6811

Unclassified

Security Classification

A-31408

Unclassified
Security Classification

| 14 KEY WORDS | LINK A ROLE | LINK A WT | LINK B ROLE | LINK B WT | LINK C ROLE | LINK C WT |
|---|---|---|---|---|---|---|
| Weapon system optimization | | | | | | |
| Integer program | | | | | | |
| Reliability | | | | | | |

DD FORM 1 NOV 65 1473 (BACK)

S/N 0101-807-6821



Security Classification

A-31409

An Integer Programming Model for Constrained

Optimization of System Effectiveness

with Particular Application to the P3-C

by

Frederick John Schineller, III
Lieutenant, United States Navy
B.S., United States Naval Academy, 1965

Submitted in partial fulfillment of the
requirements for the degree of

MASTER OF SCIENCE IN OPERATIONS RESEARCH

from the

NAVAL POSTGRADUATE SCHOOL
March 1972

Author: Frederick John Schineller III

Approved by: W. M. Woods
Thesis Advisor

J. R. Borsting
Chairman, Department of Operations Research

Milton U. Clauser
Academic Dean

ABSTRACT

A model is developed for solving the optimization problem created when a manufacturer presents management with numerous proposed modifications which will improve the system effectiveness of an existing system. The optimization is constrained by the physical limitations of the system and by a limited budget. System effectiveness is defined and discussed in detail for an anti-submarine aircraft system with reliability considered the single most important factor. The model transforms the problem into an integer programming problem, and a numerical example is provided to demonstrate the versatility of this model.

TABLE OF CONTENTS


I. INTRODUCTION ---------- 5

II. WEAPONS SYSTEM EFFECTIVENESS ---------- 6

III. BASIC MODEL ---------- 7

IV. RESTRICTED BASIS ENTRY ---------- 12

V. MODIFICATIONS TO THE BASIC MODEL ---------- 14

A. SUBSYSTEM SEPARABILITY ---------- 14

B. REDUCED CAPABILITIES ---------- 14

C. SYSTEM CAPABILITIES ---------- 16

D. CREW CAPABILITIES ---------- 18

E. COMPLETE MODEL ---------- 18

VI. APPLICATIONS ---------- 19

A. REQUIREMENTS ---------- 19

B. AN EXAMPLE ---------- 20

C. SUMMARY ---------- 23

BIBLIOGRAPHY ---------- 25

INITIAL DISTRIBUTION LIST ---------- 26

FORM DD 1473 ---------- 27

## LIST OF FIGURES

Figure

3-1 Simple Series System ---------- 9

3-2 Simple Parallel System ---------- 10

4-1 Simple Parallel System ---------- 12

Table

6-1 Inputs from Manufacturer ---------- 22

6-2 Ordered Marginal Dollar Effectiveness ---------- 23

# I. INTRODUCTION

Rapidly growing sophistication and complexity of the weapons systems in the military arsenal today has greatly increased the difficulty in comparing different systems designed to perform similar missions and the difficulty in optimizing weapons system effectiveness improvements within one system. One such complex system, in need of some improvement, is the Navy's P3-C Orion, an anti-submarine warfare aircraft.

In a complex electronics system, such as the P3-C, a major portion of its system effectiveness is dependent on its reliability. Hence, a model was sought that would be applicable to optimizing the reliability of a system and, at the same time, that could be modified to include any other factors in the measurement of system effectiveness.

This paper considers the problem which faces management if the manufacturer submits some 100-200 proposed modifications which will increase the reliability or some capability of the system. Assuming there are constraints on the budget available and weight increases allowed on and volume available in the aircraft, the problem which management must solve is defined as follows: maximize some measure of weapons system effectiveness, subject to the budget, weight and volume constraints. The model herein will help provide an answer for that problem.

## II. WEAPONS SYSTEM EFFECTIVENESS

A measure of the effectiveness is the primary prerequisite before any attempt can be made to compare different systems or to consider improvements within a single system. The most logical measure of effectiveness for an anti-submarine system is how well can the system catch a submarine; or, given a submarine is present, what is the probability that a crew in the aircraft can successfully acquire, identify, localize and kill the submarine within the aircraft's flight time capability.

A standard mission will be considered as two hours flight time to station, eight hours on station, and two hours to return to base. The target will be a standard, undefined submarine and an average crew, also undefined, will be aboard the aircraft. Weapons system effectiveness (henceforth WSE) is now defined as the probability that on a standard mission an average crew is able to acquire, identify, localize and kill a standard submarine successfully.

In order to state a precise formula for WSE, the following definitions are necessary:

R Reliability of the aircraft, i.e., the probability that all required subsystems remain fully operational for the standard mission time

A The probability that the equipment on board will acquire information indicating a target is present, given that the aircraft remains operational

I The probability that the information is sufficient to allow identification as a submarine, given the aircraft remains operational

L The probability that the submarine is localized accurately enough that an attack may be made, given the aircraft remains operational

K The probability that an attack is successful, given the aircraft remains operational

C Capability of the crew, i.e., the probability that the average crew will successfully accomplish the above four portions of the

mission, given that the aircraft remains operational and given that the equipment is successful in accomplishing the four portions of the mission

Assuming that the four portions of the mission are independent, WSE is defined as the product R x A x I x L x K x C. The problem which management must solve is:

Maximize: R x A x I x L x K x C

Subject to:
$$\sum \text{Costs } (\$) \leq \text{Budget } (B)$$
$$\sum \text{Weights } (w) \leq \text{Weight Allowance } (W)$$
$$\sum \text{Volumes } (v) \leq \text{Volume Allowance } (V)$$

## III. BASIC MODEL

Assume that the aircraft can be divided into 22 independent, separable subsystems of which 15 are considered critical to the ASW mission. Since the 15 critical subsystems all must function for the ASW mission to be successful and since they are independent and separable, the reliability of the system can be represented as a 15-component series system. It will also be assumed, at this point, that the manufacturer has not proposed any modifications which will improve the aircraft capabilities nor are any proposed which will improve crew capability. Let $R_i$ be the reliability of the $i^{th}$ critical subsystem, the objective function has become $\prod_{i=1}^{15} R_i$.

In order to solve even this reduced problem by conventional methods, the entire probability function for all 15 critical subsystems would have to be defined, and the various combinations of improvements tried. As the number of proposed modifications increases, the number of possible combinations becomes rapidly unmanageable even for a computer. Therefore, a more efficient method of solution is required. Define as follows:

Mod (ij) Modification j to the $i^{th}$ subsystem

RS Present reliability of the 15 subsystems in series

$R'_{ij}$ Reliability of the $i^{th}$ subsystem after modification $j$ has been made

$RS_{ij}$ Reliability of the system if one modification, Mod (ij), has been made

$D_{ij}$ $\frac{RS_{ij} - RS}{RS}$ Reliability increase from Mod (ij) per unit reliability before the modification has been made

Make Mod (ab) to the system

$$RS_{ab} = \left(\prod_{\substack{i=1 \\ i \neq a}}^{15} R_i\right) \times R'_{ab}$$

Reliability increase

$$RS_{ab} - RS = \left(\prod_{\substack{i=1 \\ i \neq a}}^{15} R_i\right) R'_{ab} - \left(\prod_{\substack{i=1 \\ i \neq a}}^{15} R_i\right) R_a$$

$$RS_{ab} - RS = \left(\prod_{\substack{i=1 \\ i \neq a}}^{15} R_i\right) (R'_{ab} - R_a)$$

Now divide by RS

$$\frac{RS_{ab} - RS}{RS} = D_{ab} = \frac{\left(\prod_{\substack{i=1 \\ i \neq a}}^{15} R_i\right) (R'_{ab} - R_a)}{\left(\prod_{\substack{i=1 \\ i \neq a}}^{15} R_i\right) \times R_a}$$

$$D_{ab} = \frac{R'_{ab} - R_a}{R_a} \qquad \text{Eq. 1}$$

Consider Mod (ab) which is a change to a component which must work in order for its respective subsystem to work. The reliability of the subsystem can be represented as a series system with two components: the subsystem minus the component being modified in series with the component being modified.

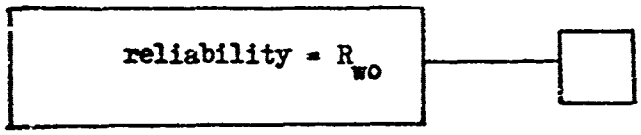


Let $\left\{ \begin{array}{l} R_{old} = \text{reliab of old comp} \\ R_{new} = \text{reliab of new comp} \end{array} \right\}$

Figure 3-1. Simple Series System

$$R_a = R_{wo} \times R_{old}$$

$$R'_{ab} = R_{wo} \times R_{new}$$

Reliability increase $\quad R'_{ab} - R_a = (R_{wo} \times R_{new}) - (R_{wo} \times R_{old}) = R_{wo} \times (R_{new} - R_{old})$

Now divide by $R_a$

$$\frac{R'_{ab} - R_a}{R_a} = \frac{R_{wo} \times (R_{new} - R_{old})}{R_{wo} \times R_{old}}$$

$$= \frac{R_{new} - R_{old}}{R_{old}}$$

From Eq. 1

$$D_{ab} = \frac{R'_{ab} - R_a}{R_a} = \frac{R_{new} - R_{old}}{R_{old}} \qquad \text{Eq. 2}$$

The important result from Eq. 2 is that $D_{ij}$ is a function of the old and new reliabilities of the component proposed for modification only. Hence, for proposed modifications to components which must function for the mission to be successful the $D_{ij}$'s are constants and are computed simply by Eq. 2.

Next consider a component proposed for modification which is in parallel with one other component in its respective subsystem reliability representation; i.e., either the component proposed for modification or one other (or both) must work for the subsystem to work. The reliability representation would be as follows:

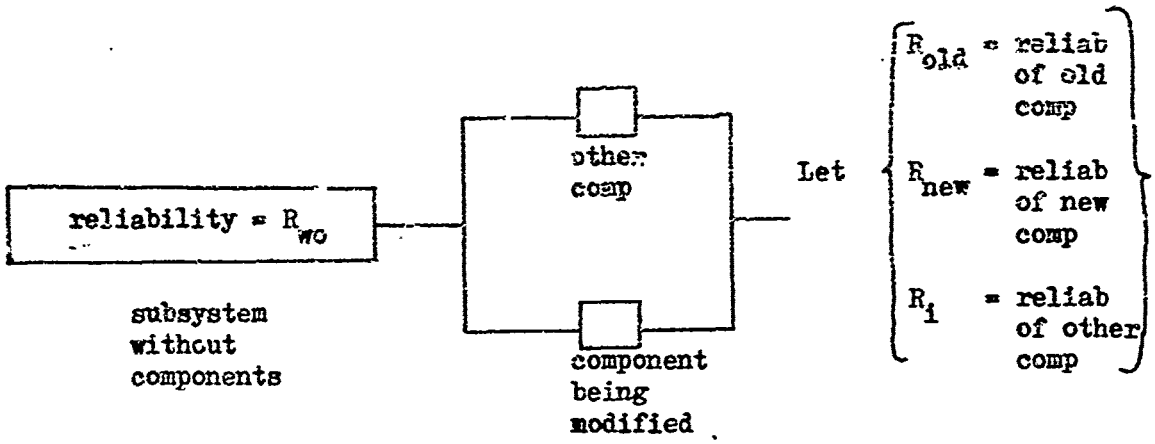


Figure 3-2. Simple Parallel System

Algebraic manipulation yields:

$$D_{ij} = \frac{R_i + R_{new} \times (1 - R_i)}{R_i + R_{old} \times (1 - R_i)} - 1 \qquad \text{Eq. 3}$$

The result is not quite as simple as Eq. 2; however, $D_{ij}$ still depends on the component proposed for modification and the one in parallel with it only. Similar equations may be derived for all cases where the component being modified is in some form of parallel reliability operation with other components. In all such cases, $D_{ij}$ is a function of the component and the ones in parallel with it only. Furthermore, the $D_{ij}$'s will remain constant throughout the optimization if there are no pairs of proposed modifications involving components which are in some form of parallel reliability operation with each other. This temporary restriction will be eased later in section IV.

Consider an unconstrained maximization of reliability if only one modification is allowed to be made. The modification which gave the largest increase in reliability would be the one chosen. This modification would also give the largest $D_{ij}$. If only two modifications were allowed, all combinations of two modifications would need to be tried in

order to find the pair which gave the largest increase in RS. However, if the largest $D_{ij}$ were chosen, then the second largest $D_{ij}$ were chosen, the modifications corresponding to the two $D_{ij}$'s would also give the largest increase in RS since $D_{ij}$ is a function of the increase in RS for Mod (ij). This process would be the same as finding the maximum $\sum D_{ij}$ given that only two were allowed to be chosen. One can use simple induction to realize that for any given number, say n, of allowed changes to be made that the same set of Mod (ij) would be chosen by either maximizing RS or $\sum D_{ij}$.

or

| | | | | |
|---|---|---|---|---|
| Maximize: | $RS = \prod_{i=1}^{15} R_i$ | is an equivalent optimization to | Maximize: | $\sum D_{ij}$ |
| Subject to: | n modifications are allowed to be made | | Subject to: | n mods allowed |

Next consider the constrained problem which is to maximize the reliability of the system subject to the budget, weight and volume restrictions.

Let:
$c_{ij}$ = \$ cost of Mod (ij)
$w_{ij}$ = weight cost of Mod (ij)
$v_{ij}$ = volume cost of Mod (ij)

Now the optimization becomes:

$$\text{Maximize: } \prod_{i=1}^{15} R_i$$

$$\text{Subject to: } \sum c_{ij} \leq B \qquad \sum w_{ij} \leq W \qquad \sum v_{ij} \leq V$$

(the summations are over the set { ij | Mod (ij) is made})

Transforming the objective function into the $D_{ij}$ form and defining a variable $X_{ij}$ = 1 if Mod (ij) is made to the system and $X_{ij}$ = 0 if Mod (ij)

is not made, the optimization may be stated as the following integer programming problem:

$$\text{Maximize:} \quad \sum X_{ij} \times D_{ij}$$

$$\text{Subject to:} \quad \sum X_{ij} \times c_{ij} \leq B$$

$$\sum X_{ij} \times w_{ij} \leq W$$

$$\sum X_{ij} \times v_{ij} \leq V$$

Since algorithms already exist for computer solutions to integer programming problems, this paper will not discuss integer programming algorithms except to suggest that an applicable algorithm for this model may be found in reference (1).

## IV. RESTRICTED BASIS ENTRY

A restricted basis entry rule will allow the restriction on modifications of components which are in some form of parallel reliability to be removed. However, one extra variable will be necessary for each such pair of proposed modifications. Consider the following reliability diagram:

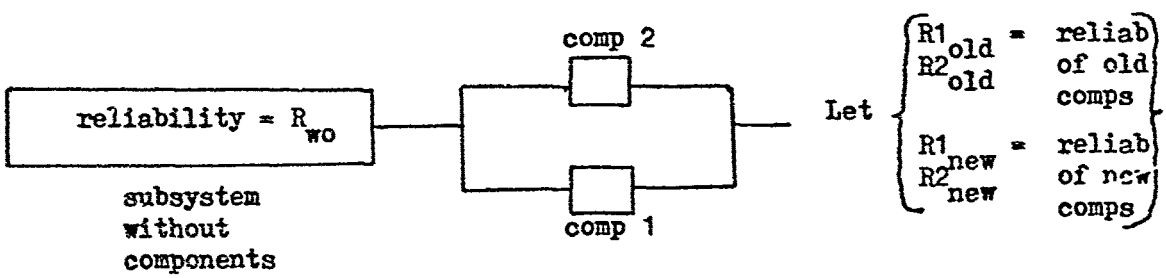


Figure 4-1. Simple Parallel System

Letting Mod (i1) be the modification to component one, Mod (i2) be the modification to component two, and Mod (i3) be the modification corresponding to the modifications of both components, the calculations for the respective $D_{ij}$'s are as follows:

$$D_{i1} = \frac{R2_{old} + R1_{new}(1 - R2_{old})}{R2_{old} + R1_{old}(1 - R2_{old})} - 1$$

$$D_{i2} = \frac{R1_{old} + R2_{new}(1 - R1_{old})}{R1_{old} + R2_{old}(1 - R1_{old})} - 1$$

$$D_{i3} = \frac{R1_{new} + R2_{new} - (R1_{new} \times R2_{new})}{R1_{old} + R2_{old} - (R1_{old} \times R2_{old})} - 1$$

A restricted basis entry rule will allow only one of the above three modifications to be in the solution at any one time. For the dummy modification the costs would simply be the sums of the respective costs associated with the two modifications which the dummy represents. If more than two proposed modifications happen to be in parallel, a similar method would be employed utilizing more dummy modifications torepresent the various combinations.

Another example which requires restricted entry is as follows: one proposed modification would replace the entire radar transmitter-receiver and antenna system, but there are also proposed modifications which only affect one component of the old system. It is obvious that a contradiction would exist if the modification which replaced the entire system and any other modification to the old system were in the optimal solution at the same time. The restricted basis entry rule would not allow contradictory modifications in the set of optimal modifications. A further use for restricted basis entry would be to disallow two (or more) modifications to the same component to be in the optimal set.

## V. MODIFICATIONS TO THE BASIC MODEL

### A. SUBSYSTEM SEPARABILITY

It was originally assumed that the 15 critical subsystems were independent and separable. Although independence among the failure times of the components is a necessary assumption, the subsystems do not need to be separable. If the components proposed for modification can be isolated from their respective subsystems, then they can also be separated from the entire system. Therefore, the system may be considered as a whole and the $D_{ij}$'s may be calculated by merely isolating the components into their simplest series reliability operation with the whole system. Hence the i subscript, indicating the subsystem being modified, may be dropped and the $D_{ij}$'s simply become $D_j$'s. This will allow the model to be used for systems which cannot be separated into separate subsystems.

### B. REDUCED CAPABILITIES

Thus far only a system which is either working or failed has been considered. Whereas this simple model may be representative of a tank or an amphibious landing craft, most more complicated weapons systems have several reduced capability modes of operation in addition to a fully operational mode. Therefore, a redefinition of WSE is necessary in order to include reduced capability modes of operation in this model.

First the several levels of operation must be defined. For this model, three levels of operation will be considered in addition to the failed mode: fully operational, secondary mode, and tertiary mode. The reliability function must be developed for each level of operation. Only pieces of equipment which, if failed, would cause the system to go into a reduced capability mode should be considered; e.g., since the computer is essential to all three modes of operation, it should be considered in the

reliability function of all three modes; whereas the failure of the inertial navigation system will cause the system to be reduced to the secondary mode, and hence should only be considered in the reliability function of the fully operational mode.

Now the $D_j$'s must be computed for each proposed modification from the reliability functions of each mode of operation: e.g., there would be a $D1_j$, $D2_j$ and $D3_j$ computed for a modification to the computer, but only a $D1_j$ ($D2_j$ and $D3_j$ would be 0) for a modification to the inertial navigation system.

Next, the four system capabilities, acquisition, identification, localization and kill, must be determined for each mode.

Lastly, a weighting factor must be determined for each mode of operation which should be some measure of the probability of remaining in each respective mode for the mission. These weightings should sum to one. At first glance it would appear as though the weightings would be merely the reliability for the respective modes of operation, given the system does not abort. However, if a piece of equipment which is essential to the long-range navigation subsystem fails after the aircraft is on station, the capability for catching the submarine has not really been affected. Hence the method of determination of the weighting factors must be carefully considered by the manager. One possible set of weighting factors would be as follows: W1 = probability of remaining fully operational for at least half the mission given the system does not fail completely; W2 = probability that the system is in the secondary mode of operation for at least half the mission given that the system does not fail completely; and W3 = 1 - (W1 + W2).

Define as follows:

$\begin{Bmatrix} R1 \\ R2 \\ R3 \end{Bmatrix}$ Reliability of the system operating in fully operational, secondary and tertiary modes, respectively

$$\begin{Bmatrix} A1, I1, L1, K1 \\ A2, I2, L2, K2 \\ A3, I3, L3, K3 \end{Bmatrix}$$ Same as in the original description of WSE, but reflecting the capabilities of the various levels of operation

$$\begin{Bmatrix} D1_j \\ D2_j \\ D3_j \end{Bmatrix}$$ Same as previously, except to reflect the effect of Mod (j) for the various levels of operation

Now:

$$WSE = (R1 \times A1 \times I1 \times L1 \times K1 \times W1) + (R2 \times A2 \times I2 \times L2 \times K2 \times W2) + (R3 \times A3 \times I3 \times L3 \times K3 \times W3)$$

And the optimization becomes:

$$\text{Maximize:} \quad \sum_j X_j \, (D1_j \times W1 + D2_j \times W2 + D3_j \times W3)$$

Subject to: Same constraints

C. SYSTEM CAPABILITIES

In order to consider modifications which will improve the system capabilities, the following questions must be considered:

1. Is there more than one type of mission?
2. If a new piece of equipment is added to the system, how will this affect reliability?
3. Can system capability be measured accurately enough?

In considering various mission types, i.e., diesel submarine as opposed to nuclear submarine as the target, the capabilities of the system should be significantly different. Furthermore, if different equipment must be used for different mission types, then the reliability function will be different for the different mission types too. For this model two missions will be considered Mission one and Mission two. It is assumed that the probability of the system being tasked to a type one or a type two mission are known.

M1 = Probability of type one mission

M2 = Probability of type two mission = 1 - M1

$D_{j\ m1}$ Defined as previously except to reflect the effect of
$D_{j\ m2}$ Mod (j) on a type one or two mission

The optimization becomes:

$$\text{Maximize:} \quad \sum_j X_j \left(D_{j\ m1} \times M1 + D_{j\ m2} \times M2\right)$$

If a completely new piece of equipment is introduced into the system, in order to increase system capability, the effect on system reliability must also be considered in the calculation of $D_j$. Two cases are considered: a replacement piece of equipment is put into the system which improves capability and changes reliability; and a new piece of equipment is added to the system replacing none but improving system capability.

If a modification replaces a component and changes system capability, then $D_j$ will have more than one component. The D-value is first computed for the reliability change (if reliability decreases then this D-value will be negative). Next the D-value is computed for the change in the system capability, acquisition, identification, localization or kill, which is affected; and if more than one capability is affected, a D-value is computed for each effect. $D_j$ is merely the sum of the D-values computed.

If a modification only adds a new piece of equipment, improving capability, $D_j$ is computed normally. However, an adjustment must be made to the computed $D_j$ to reflect the reliability of the piece of equipment. For example, if the reliability of the new piece of equipment were .95, then the $D_j$ used in the optimization should be $.95 \times D_j$ as computed. The decrease in the $D_j$ compensates for the fact that the increase in WSE from this particular modification would only be realized 95% of the time.

Care must be exercised before deciding to introduce system capabilities into the model. As with crew capability, unless the measurements are of

the same degree of precision as the measurements of reliability, then inaccuracies will be introduced into the optimization.

## D. CREW CAPABILITIES

Introducing crew capability into the model is simple if, indeed, crew capability can be measured, if meaningful modifications can be proposed which will change crew capability, and if the change in crew capability can be precisely measured. The problem of including crew capability in the model thus becomes a problem in human factors. Assuming there is a valid measure of "average" crew capability, one possible modification might be to increase the training period for crew members. The increased training should logically increase crew capability, but how much? If precise measurements are not possible, which they are not, it would be better to consider modifications which affect crew capability and crew comfort as a separate problem.

The $D_j$'s as computed for reliability change are fairly precise quantities as should the $D_j$'s for modifications affecting system capability be also, but the $D_j$'s computed for crew capability modifications cannot be precise. Therefore, crew capability modifications will not be considered in this model.

## E. COMPLETE MODEL

The final model including reliability, system capabilities, two mission types, three levels of operational capability, but not including crew capability, is as follows:

Weapon System Effectiveness (WSE) =

$$
\begin{aligned}
& (R1_{m1} \times A1_{m1} \times I1_{m1} \times L1_{m1} \times K1_{m1} \times W1 \times M1) \\
+ & (R2_{m1} \times A2_{m1} \times I2_{m1} \times L2_{m1} \times K2_{m1} \times W2 \times M1) \\
+ & (R3_{m1} \times A3_{m1} \times I3_{m1} \times L3_{m1} \times K3_{m1} \times W3 \times M1) \\
+ & (R1_{m2} \times A1_{m2} \times I1_{m2} \times L1_{m2} \times K1_{m2} \times W1 \times M2) \\
+ & (R2_{m2} \times A2_{m2} \times I2_{m2} \times L2_{m2} \times K2_{m2} \times W2 \times M2) \\
+ & (R3_{m2} \times A3_{m2} \times I3_{m2} \times L3_{m2} \times K3_{m2} \times W3 \times M2)
\end{aligned}
$$

and the integer program is as follows:

Maximize: $$\sum_j \left[ X_j \sum_{\substack{m1 \\ m2}} (D1_j \times W1 + D2_j \times W2 + D3_j \times W3) \right]$$

Subject to: $$\sum_j X_j \times c_j \leq B$$

$$\sum_j X_j \times w_j \leq W$$

$$\sum_j X_j \times v_j \leq V$$

$X_j = 1$ if Mod (j) is made

$X_j = 0$ if Mod (j) is not made

## VI. APPLICATIONS

### A. REQUIREMENTS

This model can be applied to any system whose effectiveness can be precisely defined and determined. The most important requirement is that the components which are proposed for modification are able to be isolated into some form of series reliability with the rest of the system.

It will be required that the manufacturer provide the following information: Mod #, computed $D_j$, $c_j$, $w_j$, $v_j$, and any other Mod #'s which may not be in the optimal set at the same time. See Table 6-1 for an

example of the information and suggested format. The $D_j$'s should all be positive, since a negative $D_j$ would indicate a change which would reduce reliability or capability. The $D_j$'s will be of a magnitude of .001 to .01. The $c_j$'s should all be positive; but the $w_j$'s and $v_j$'s may be either negative or positive. For instance, a negative weight cost would imply that the new component is lighter than the old one.

Although the budget constraint is self-explanatory, it should be considered the most flexible constraint. That is, although there may be a specific amount of money set aside for improvement to a certain system, no physical laws prevent more or less money from becoming available. Hence a different set of optimal modifications may be found for several budget levels.

It must be assumed that, since the manufacturer is suggesting the modifications, they will all be individually feasible and able to be incorporated into the system. Considering an aircraft as the system to be improved, it will be assumed that the volume constraint is a rigid one, since only so much total physical space is available in which to place components. The weight constraint will also be assumed to be rigid, even though engineering safety limitations on maximum gross weight of an aircraft do include a safety margin, thus possibly allowing some leeway.

## B. AN EXAMPLE

The following problem is offered for illustrative purposes only. Whereas it is considered typical of a problem such as has been discussed, the example has been greatly simplified.

The system which is to be improved is a system with only one mission type, has only two operating modes, operational and failed, and only one system capability defined which is the probability of killing a target

given that the system remains operational. Crew capability is not considered. The additional weight allowance available is 15 units, and the additional volume available is 65 units. It is assumed that the budget available will be $34; however, management feels that several levels of funding should be considered. Making the transformation to the integer programming form, the problem may be defined as follows:

$$\text{Maximize:} \quad \sum X_j \times D_j$$

$$\text{Subject to:} \quad \sum X_j \times c_j \leq B$$

$$\sum X_j \times w_j \leq 15$$

$$\sum X_j \times v_j \leq 65$$

The manufacturer's proposed modifications may be found in Table 6-1, but no description is available. It should be noted that Mod (2) is in parallel with Mod (3) and a dummy modification, Mod (6), has been introduced. Note also that Mod (1) has a negative weight cost. Prior to a computer solution utilizing an integer programming algorithm, certain properties of the problem can be analyzed to determine whether or not computer techniques are necessary and to determine whether or not all the constraints are necessary. By dividing $D_j$ by $c_j$ the marginal dollar effectiveness of Mod (j) may be computed. The marginal weight effectiveness and marginal volume effectiveness for Mod (j) may also be computed. The marginal effectivenesses are also in Table 6-1.

| $j$ | $D_j$ | $c_j$ | $w_j$ | $v_j$ | $D_j/c_j$ | $D_j/w_j$ | $D_j/v_j$ | Restricted Mod #'s |
|---|---|---|---|---|---|---|---|---|
| 1 | .0020 | 1 | -2.0 | 5 | .002 | -.001 | .0004 | |
| 2 | .0030 | 5 | 1.0 | 5 | .0006 | .003 | .0006 | 3,6 |
| 3 | .0036 | 12 | 2.0 | 12 | .0003 | .0003 | .0003 | 2,6 |
| 4 | .0044 | 4 | .4 | 4 | .0011 | .011 | .0011 | |
| 5 | .0050 | 10 | 2.5 | 5 | .0002 | .002 | .001 | |
| 6 | .0051 | 17 | 3.0 | 17 | .0003 | .0017 | .0003 | 2,3 |
| 7 | .0052 | 13 | .4 | 4 | .0004 | .013 | .0013 | |
| 8 | .0052 | 4 | .2 | 13 | .0013 | .026 | .0004 | |
| 9 | .0056 | 8 | .7 | 7 | .0007 | .008 | .0008 | |
| 10 | .0060 | 5 | 3.0 | 2 | .0012 | .002 | .003 | |
| 11 | .0060 | 12 | 1.5 | 6 | .0005 | .004 | .001 | |
| 12 | .0063 | 7 | 2.0 | 9 | .0009 | .0031 | .0007 | |
| 13 | .0064 | 8 | 4.0 | 16 | .0008 | .0016 | .0004 | |
| 14 | .0080 | 2 | 0.0 | 2 | .004 | undef | .004 | |
| 15 | .0150 | 3 | 6.0 | 5 | .005 | .0025 | .003 | |

Table 6-1. Inputs from Manufacturer

Ordering the modifications in decreasing order of marginal dollar effectiveness and considering that the modifications are made in that order will generate the table in Table 6-2. Similar tables may also be generated for marginal weight effectiveness and for marginal volume effectiveness. Since the constraints on weight and volume are assumed to be rigid, it is obvious that for any budget not greater than $42, the optimal set of modifications can be taken right from Table 6-2. The optimization has simply become:

Maximize: $\sum D_j/c_j$

Subject to: $c_j \leq B$

| Mod # | Total Dollar Cost | Total Weight Cost | Total Volume Cost |
|---|---|---|---|
| 15 | 3 | 6 | 5 |
| 14 | 5 | 6 | 7 |
| 1 | 6 | 4 | 12 |
| 8 | 10 | 4.2 | 25 |
| 10 | 15 | 7.2 | 27 |
| 4 | 19 | 7.6 | 31 |
| 12 | 26 | 9.6 | 40 |
| 13 | 34 | 13.6 | 56 |
| 9 | 42 | 14.3 | 63 |
| 2 | 47 | 15.3 | 68 |
| 11 | 59 | 16.8 | 74 |
| 7 | 72 | 17.2 | 78 |
| 5 | 82 | 19.7 | 83 |
| 6 | 94 | 21.7 | 95 |

Table 6-2. Ordered Marginal Dollar Effectiveness

From a similar set of tables for ordered marginal weight and volume effectiveness tables, it can be shown that, for any budget of $73 or greater, the budget constraint is no longer really a constraint; or in other words, that for the rigid weight constraint of 15 and volume constraint of 65 a budget constraint of at least $73 will never be violated even if the optimization were not to consider dollar costs.

## C. SUMMARY

Summarizing the insight gained from the example, it has been shown that for a budget of $42 or less that the optimization problem is a one-constraint problem and can be done simply by hand. For a budget of $73

or greater, the optimization is reduced to a two-constraint problem which greatly reduces the time required to solve by integer programming methods. Hence, only for budget values between \$42 and \$73 must all three constraints be considered.

In an actual problem, it might be the case that either the weight constraint or the volume constraint might be so restrictive that the other might not need to be considered; or it might be the case that either constraint might be so loose that it need not be considered as a real constraint. For example, if the volume constraint in the example problem were relaxed to 75, it would no longer be a real constraint for the weight constraint of 15 and the given set of modifications. Conversely, if the volume constraint were tightened to 57 for the same weight constraint of 15 and the same set of modifications, then the weight constraint would no longer be a real constraint to the optimization.

This method of constraint analysis is simple to perform for this model, and the amount of work required of the computer to compute optimal sets of modifications for several budget levels may be greatly reduced.

## BIBLIOGRAPHY

1. Kianfar, F., "Stronger Inequalities for 0,1 Integer Programming Using Knapsack Functions," Operations Research, v. 19, #6, p. 1372-1392, October 1971.