AD 743 467

AD

HDL-TM-72-8

ELECTRONIC TIME FUZE FOR MORTAR ILLUMINATING ROUNDS (60, 81 MM)-FEASIBILITY STUDY

by

Marion A. Barron

April 1972

DDC
RECEIVED
JUN 15 1972
B

U.S. ARMY MATERIEL COMMAND
HARRY DIAMOND LABORATORIES
WASHINGTON, D.C. 20438

APPROVED FOR PUBLIC RELEASE; DISTRIBUTION UNLIMITED

Reproduced by
NATIONAL TECHNICAL
INFORMATION SERVICE
Springfield, Va. 22151

The findings in this report are not to be construed as an official Department of the Army position unless so designated by other authorized documents.

Citation of manufacturers' or trade names does not constitute an official indorsement or approval of the use thereof.

Destroy this report when it is no longer needed. Do not return it to the originator.

AD

DA-1T061101A91A
AMCMS Code: 501A.11.84400
HDL Proj ILR48

HDL-TM-72-3

ELECTRONIC TIME FUZE FOR MORTAR ILLUMINATING ROUNDS (60, 81 MM)-FEASIBILITY STUDY

by

Morton A. Barron

April 1972

U.S. ARMY MATERIEL COMMAND

HARRY DIAMOND LABORATORIES

WASHINGTON, D.C. 20438

APPROVED FOR PUBLIC RELEASE; DISTRIBUTION UNLIMITED.

ABSTRACT

A new electronic time-fuze concept has been investigated for use with the new Company Lightweight Mortar System (CLWMS), which is expected to have a flight time of greater than 40 sec. In the new concept, the fuze is settable at 2-sec intervals up to 50 sec, uses the power supply and basic hardware from the multioption fuze (MOF) that is being developed for the new mortar system, and employs the analog electronic timer from the XM732 Short-Intrusion Artillery Proximity fuze.

Based on the results of this study, the new fuze concept is proposed for use with the CLWMS. The accuracy of this fuze greatly exceeds that of a pyrotechnic-type fuze, its development requires no advances in the state-of-the-art, and production is attainable at a moderate cost within the desired time schedule. Also, the contour of the new fuze would be very similar to that of the MOF being developed, and the design would be compatible with the latest safety regulations.

This report summarizes the results of that study and presents a preliminary development and cost plan.

Preceding page blank

UNCLASSIFIED
Security Classification

DOCUMENT CONTROL DATA - R & D

(Security classification of title, body of abstract and indexing annotation must be entered when the overall report is classified)

1. ORIGINATING ACTIVITY (Corporate author) Harry Diamond Laboratories Washington, D. C. 20438	2a. REPORT SECURITY CLASSIFICATION UNCLASSIFIED 2b. GROUP

3. REPORT TITLE

ELECTRONIC TIME FUZE FOR MORTAR ILLUMINATING ROUNDS (60, 81 MM) - FEASIBILITY STUDY

4. DESCRIPTIVE NOTES (Type of report and inclusive dates)

5. AUTHOR(S) (First name, middle initial, last name)

Morton A. Barron

6. REPORT DATE April 1972	7a. TOTAL NO. OF PAGES 18	7b. NO. OF REFS 0
8a. CONTRACT OR GRANT NO b. PROJECT NO. HDL 1V R48 c. AMCMS Code: 501A.11.84400 d. DA-1T061101A91A	9a. ORIGINATOR'S REPORT NUMBER(S) HDL-TM-72-3 9b. OTHER REPORT NO(S) (Any other numbers that may be assigned this report)	

10. DISTRIBUTION STATEMENT

Approved for public release, distribution unlimited.

11. SUPPLEMENTARY NOTES	12. SPONSORING MILITARY ACTIVITY Army Materiel Command

13. ABSTRACT

A new electronic time-fuze concept has been investigated for use with the new Company Lightweight Mortar System (CLWMS), which is expected to have a flight time of greater than 40 sec. In the new concept, the fuze is settable at 2-sec intervals up to 50 sec, uses the power supply and basic hardware from the multioption fuze (MOF) that is being developed for the new mortar system, and employs the analog electronic timer from the XM732 Short-Intrusion Artillery Proximity fuze.

Based on the results of this study, the new fuze concept is proposed for use with the CLWMS. The accuracy of this fuze greatly exceeds that of a pyrotechnic-type fuze, its development requires no advance in the state-of-the-art, and production is attainable at a moderate cost within the desired time schedule. Also, the contour of the new fuze would be very similar to that of the MOF being developed, and the design would be compatible with the latest safety regulations.

This report summarizes the results of that study and presents a preliminary development and cost plan.

DD FORM 1 NOV 65 1473 REPLACES DD FORM 1473, 1 JAN 64, WHICH IS OBSOLETE FOR ARMY USE.

UNCLASSIFIED
Security Classification

14. KEY WORDS	LINK A ROLE	LINK A WT	LINK B ROLE	LINK B WT	LINK C ROLE	LINK C WT
mortar fuzing						
illuminating round fuze						
electronic time fuze						
Company lightweight mortar						

CONTENTS

	Page
ABSTRACT	3
1. BACKGROUND	7
2. PROPOSED FUZE DESIGN AND OPERATION	7
2.1 General Description	7
2.2 Firing Sequence	11
2.3 Discussion	11
3. RESULTS OF PARAMETERS INVESTIGATED	11
3.1 Advantages of Proposed Design	11
3.2 Disadvantages of Proposed Design	12
4. PROGRAM PLAN AND COST ESTIMATE	12
5. CONCLUSIONS	14
Table I. Fuze development cost estimate	14

ILLUSTRATIONS

Figure 1. Multioption mortar fuze assembly	8
Figure 2. Electronic time fuze for mortars	9
Figure 3. Timer housing assembly	10

Preceding page blank

1. BACKGROUND

An Army-initiated research and development program is being directed toward a new lightweight mortar system for use at Company level during the mid 70's. This development includes a baseplate, tube, 60-mm ammunition, fuze and sighting equipment. The new 60-mm mortar system is being designed with the maximum range possible under such constraints as the HE projectile weight and tube weight. The illuminating round and its fuze must be designed to have the same range. Until recently, the maximum system range was suspected to be about 3000 meters (m); the product-improved M65—the standard 60-mm mortar time fuze—was considered acceptable for the illuminating-round use. It is now apparent, however, that the anticipated range is closer to 4000 m, thus requiring a time fuze with a 45-sec time (max). Based on an evaluation (by MUCOM and PA staff members), the M65 mortar time fuze cannot be made operable for the maximum flight time anticipated.

At present, there is no time fuze adequately small to fit the system's illuminating round and capable of functioning for this period of time. Section 2 of this report proposes a new electronic fuze design that is settable in 2-sec intervals up to 50 sec and is considered suited for the new mortar system application. Also, this report compares the use of this electronic fuze design with that of a pyrotechnic type, and summarizes a development program plan and cost estimate.

2. PROPOSED FUZE DESIGN AND OPERATION

2.1 General Description

The draft material need (MN) for the lightweight mortar system requires that a multi-option fuze (MOF) be developed, as concurred by AMC, CDC, MUCOM, CDC-IA, and WECOM. Advanced development (AD) effort on this part of the system has produced a preliminary design consisting of a wind-driven alternator and gear reducer to provide electric power and safe air travel, safing and arming (S&A) mechanism with a setback element and an out-of-line explosive train, and a proximity sensing electronic section. Results obtained through a DOD value analysis and other studies indicate that this fuze can be built for less than $10 when produced in large quantities. It is now indicated that very large savings will be reflected in time-fuze development costs, and that a vastly improved illuminating system will result if the design is based on the MOF principle. It is, therefore, proposed that the system employ the identical S&A system and alternator as that used with the MOF design and develop just an electronic timer to replace the proximity fuze.

The advanced development (AD) model of the MOF assembly is shown schematically in figure 1. An equivalent model of the illuminating round time fuze would be similar in appearance except that the section forward of the alternator turbine wheel would be replaced with an analog electronic timer as diagrammed in figure 2. The electronic timer is seen as a repackaged version of the electronic timer used in the XM732 (Short-Intrusion Artillery Proximity Fuze) scheduled for type classification (TC) during 1972. Field tests have been conducted with more than 500 such timers, using the 4.2-in. mortar, 105- and 155-mm howitzers, and 175-mm cannon. The assembly of this timer is shown schematically in figure 3. The 1.643-in. outside diameter (o.d.) illustrated in figure 3 must be reduced to less than 1.500 in., but preliminary sketches from which the drawing in figure 2 was made show that adequate space exists for the required parts. A ratiometer, also used in the XM732 and the subject of a Production Engineering Measure (PEM) out of ECOM, will be mounted above the timer housing and will engage the timer through brushes. Turning the windshield or clamp ring

Preceding page blank

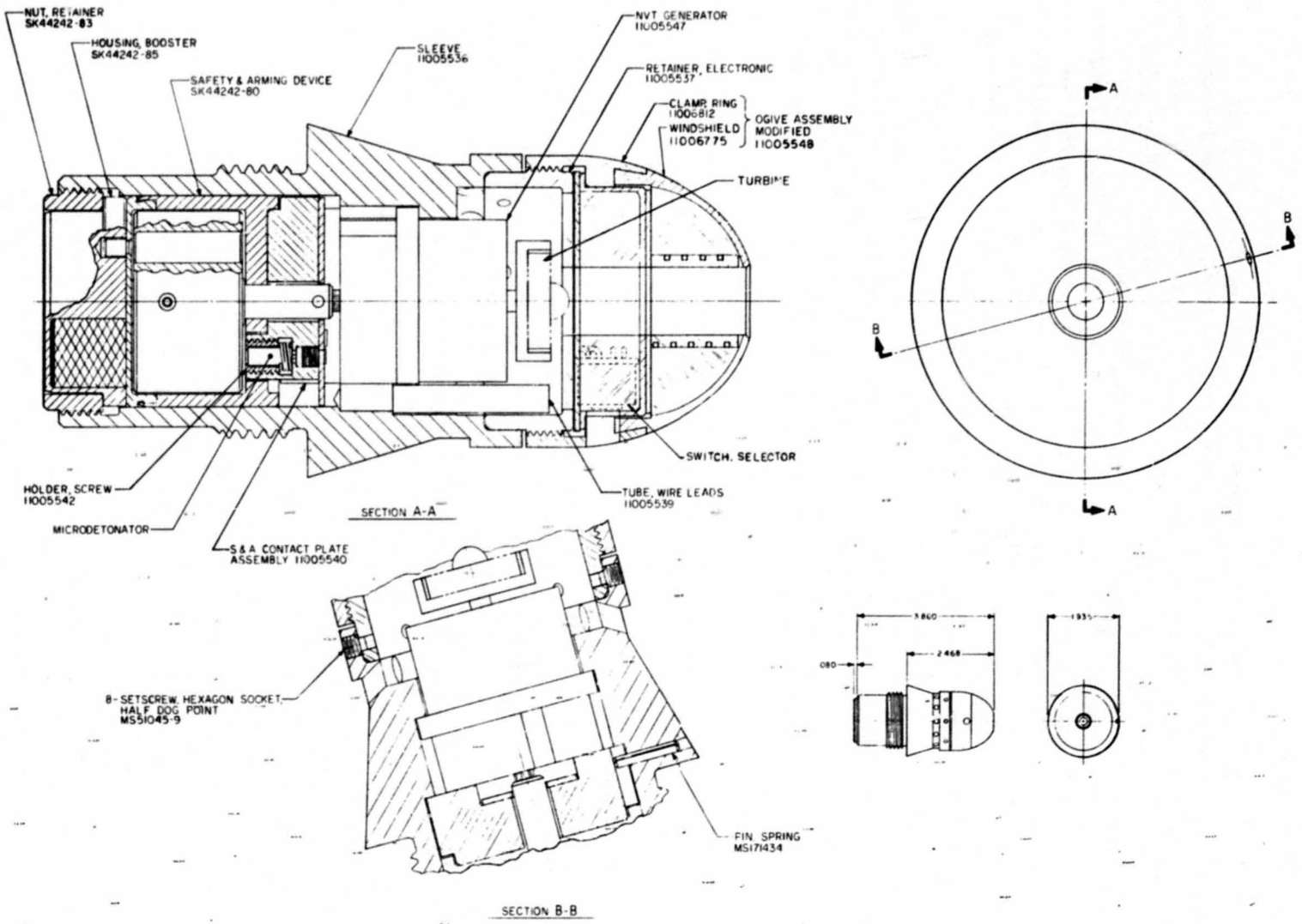

Figure 1. Multioption mortar fuze assembly.

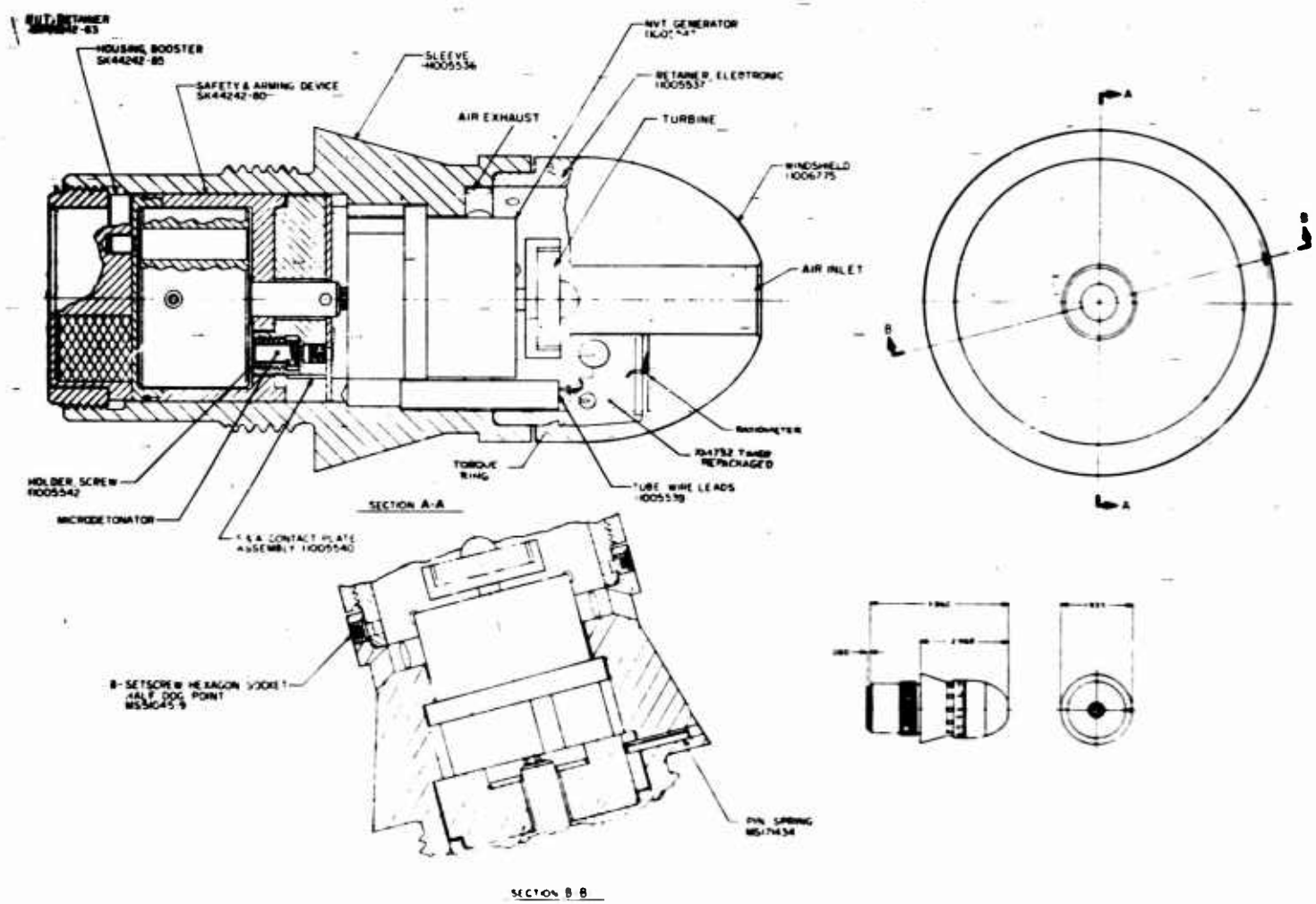

Figure 2. Electronic time fuze for mortars.

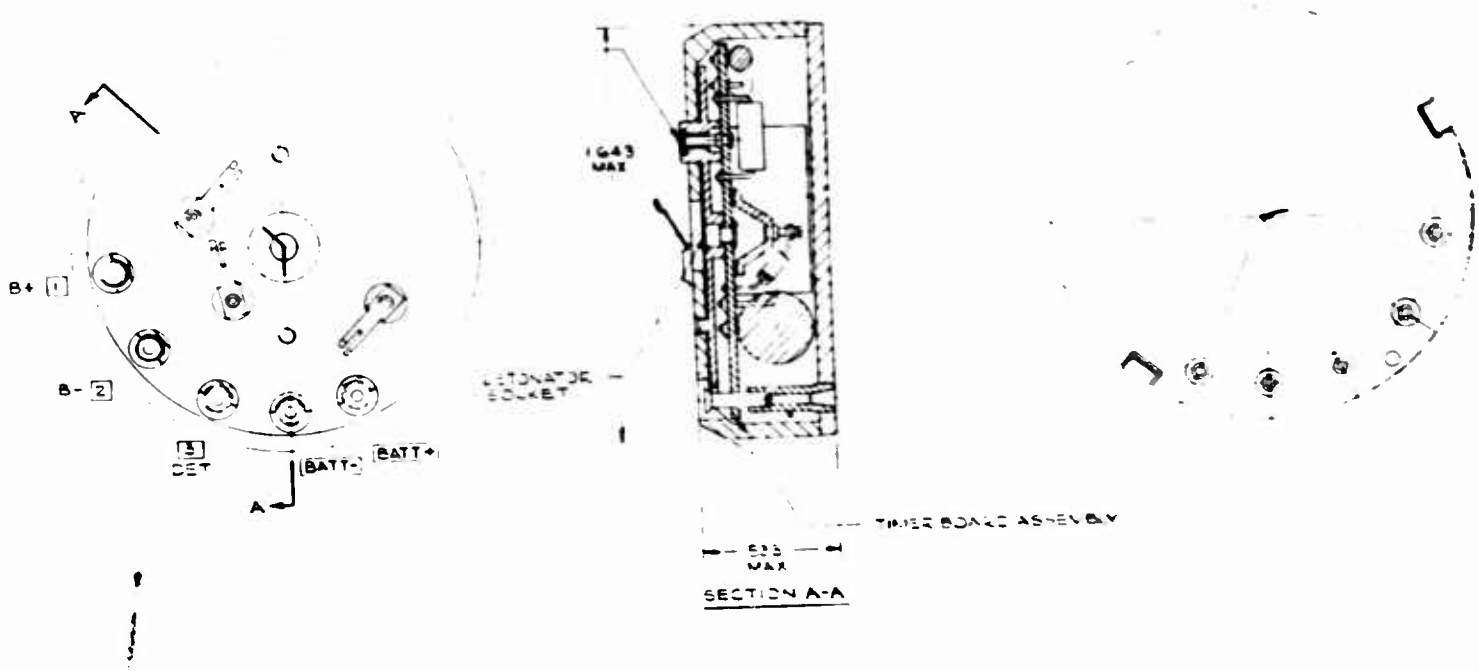

Figure 3. Timer housing assembly.

(fig. 2) will rotate the ratiometer relative to the timer and vary the time. This type timer is infinitely variable in setting between zero and some preset upper limit. It is proposed to make the upper limit 50 sec, using 25 scribe marks on the nose calibrated in 2-sec intervals. The mortarman can then set the fuze to any even number of seconds from 2 to 50 by merely turning the nose. The XM732 timer can be specified at ±2.0-percent accuracy over the 50-sec range. A wider allowable error could be accomplished at a reduced cost; in any event, the error at some fixed temperature will be considerably less than ±2 sec.

2.2 Firing Sequence

At firing, the double-element setback device in the S&A assembly sets back and locks when it recognizes the proper g-time signature. This unlatches the rotor. The air ingested now drives the turbine wheel, runs the alternator and, through a speed reducer, the S&A rotor. After 100 m of air travel, the rotor comes into line and locks; thus, arming is complete. The alternator keeps running as long as the projectile velocity is greater than about 100 fps and continues providing electric power to the timer.

The timer is an analog-type RC circuit. Charging time is controlled by a variable duty-cycle-type oscillator. The ratiometer setting adjusts this duty cycle to vary the "time out." (Adequate information on the circuitry and operation is readily available as desired.) At set time, ±2 percent (approx), an output firing pulse is delivered to an electric detonator that initiates a standard-type explosive train, thus functioning the projectile. The timer in the XM732 runs at 15V and 20 mA. The alternator for the MOF is capable of delivering 600 mW minimum; thus, power is adequate.

2.3 Discussion

Unique in the XM732 timer is its integrated circuit (IC). There are two qualified suppliers of this circuitry and another that looks promising. There are also two qualified suppliers of the ratiometer. A Production Engineering Measure (PEM) with Globe Union, Inc., by ECOM promises to find a way to produce the ratiometer (presently a $2 to $3 item) for less than $0.25 in large quantities.

Since the size, power and voltage levels, ruggedness and cost seem compatible with the illuminating-round requirements and with the S&A and alternator under development, this timer seems a reasonable potential. Figure 3 indicates that the packaging and structure of the electronic timer in the multioption hardware and with its basic components is not a major task.

3. RESULTS OF PARAMETERS INVESTIGATED

The results listed below are based on the HDL analysis of this electronic time fuze as compared with the pyrotechnic type fuze. No systems analysis or cost effectiveness study has been performed because of inadequate funding and time; the explanations given below are therefore qualitative.

3.1 Advantages of Proposed Design

The MOF design proposed for the new lightweight mortar application was considered on the basis of the following advantages:

(1) Development cost of 70 percent of the components is funded or in a funding plan, leaving a minimal amount to be funded.

(2) Timer portion is an artillery-qualified item and requires only repackaging and testing in this application.

(3) Timer will be settable; thus, the mortarman need not adjust angle of fall or charge to function over target. Flight time will be available to crew through firing tables and the fuze can be set with no mortar adjustment.

(4) Fuze will meet MIL-STD-1313A precisely, thus requiring no waiver.

(5) Fuze production is attainable without a whole new production plant. Only the timer portion will be new; the other parts can be produced on the multioption line, which will raise the production rate and allow lower piece-part costs.

(6) Fuze can be ready for ET/ST and TC concurrently with the illuminating round. This is probably the only fuze that can make the illuminating system available for the CLWMS's scheduled delivery date without the need for an interim fuze or interim capability.

(7) Test phases ET/ST can be conducted on the illuminating round and fuze concurrently, which will greatly reduce program costs.

(8) Appearance of the proposed fuze will be essentially similar to that of the MOF designed for this application. Thus, training will be simplified; also, effort will be made to attain a time-selection procedure similar to that of the option-selection procedure, further simplifying training efforts.

(9) The fuze can be made operable for the Battalion System maximum flight time; thus, no new fuze will be required for the foreseeable future.

3.2 Disadvantages of Proposed Design

Results of the feasibility study show that:

(1) Production cost, at $9 to $10 (approx), will be greater than that for a pyrotechnic fuze.

(2) Troop orientation will be required, since the fuze must be set instead of mortar adjusted when using 60-mm illuminating round.

4. PROGRAM PLAN AND COST ESTIMATE

A development program plan and cost estimate were studied during this investigation. A "cost and time-to-complete" estimate is considered a necessary adjunct to a feasibility effort in that it gives management the complete picture. A projected development plan is presented below.

DEVELOPMENT PROGRAM PLAN

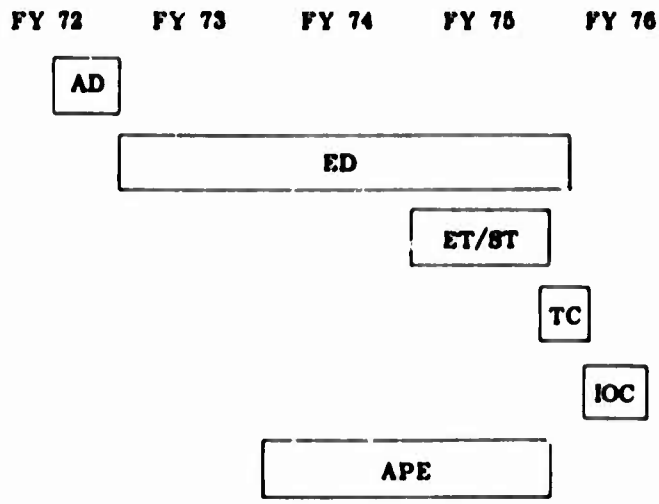

A hardware feasibility effort is also required. Assuming this effort could be started in 3QFY72 and continue for 6 months, some 200 fuzes could be fabricated and tested through flight tests and preliminary environmental tests to prove the system in. Flight tests could be conducted on HE configured rounds with spotting charges to avoid waiting for the illuminating cartridge.

During the 3-yr ED phase, about 7000 fuzes would be built with contractor aid starting late in FY73. Two to three thousand of these fuzes would be reserved for ET/ST and the others for ED testing. The advanced production engineering (APE) program to build prototype tooling for the electronic portion would start in FY74; thus, a design producible at high rates and low cost would be the one built in significant quantities and available for the service tests (ST).

It is anticipated that all ED tests, except about 200 proof rounds, would be conducted on M49A4E1 shell.

To conserve time and funds, we assume a single ET/ST program will be conducted on cartridge and fuze. Slight misalignment of schedules can probably be adjusted for the sake of these savings.

Contract action is assumed to be with one of the three present suppliers of XM732 timer IC's. The MOF contractor would probably be assembler of the time fuze throughout the development program.

Two or three extra man-years will be required in the development branch to include time-fuze development into the Company Mortar Fuze Program. Table I lists the projected cost estimate for the fuze development.

Table I. Fuze Development Cost Estimate

Cost Breakdown	Fiscal year				Total
	72	73	74	75	
	Number of fuzes built				
	200	1000	3000	3000	
	(k$)	(k$)	(k$)	(k$)	(k$)
Total fuze cost	40	50	100	100	290
In-house engineering	40	120	120	120	400
Model shop	30	30	20	10	90
Machine shop	30	40	40	20	130
Contract		75	100	100	275
Total	140	315	380	350	1185
6.3	140				140
6.4		315	240	110	665
APE			140	240	380
Total	140	315	380	350	1185

No effort has been made to develop a detailed ED program; the estimates given are based on a generalized 3000-round test program and full technical-data development.

5. CONCLUSIONS

The approach investigated here combines the XM732 electronic timer with the multioption fuze S&A and alternator to provide a settable time fuze adequate for the new mortar system illuminating cartridge. This concept appears highly feasible for the desired application—it is producible at moderate cost, requires very low-risk development effort, has simplified method of operation, and can be available for the CLWMS's scheduled delivery date.