AD 742270

NOLTR 72-63

AN EVALUATION OF ORGANIC PEROXIDE HAZARD CLASSIFICATION SYSTEMS AND TEST METHODS

By
Carl Boyars

1 MARCH 1972

DDC
RECEIVED
JUN 1 1972
D

NOL

NAVAL ORDNANCE LABORATORY, WHITE OAK, SILVER SPRING, MARYLAND

APPROVED FOR PUBLIC RELEASE;
DISTRIBUTION UNLIMITED

Reproduced by
NATIONAL TECHNICAL
INFORMATION SERVICE
Springfield Va 22151

NOLTR 72-63

TECHNICAL REPORT STANDARD TITLE PAGE

1. Report No.	2. Government Accession No.	3. Recipient's Catalog No.
TSA-72-1		

4. Title and Subtitle	5. Report Date
AN EVALUATION OF ORGANIC PEROXIDE HAZARD CLASSIFICATION SYSTEMS AND TEST METHODS	February 1972
	6. Performing Organization Code
7. Author(s)	8. Performing Organization Report No.
CARL BOYARS	NOLTR 72-63
9. Performing Organization Name and Address	10. Work Unit No.
Chemistry Research Department Naval Ordnance Laboratory, White Oak Silver Spring, Maryland 20910	NOL-586/DOTX0123
	11. Contract or Grant No.
	DOT-AS-10055
12. Sponsoring Agency Name and Address	13. Type of Report and Period Covered
Department of Transportation Office of Assistant Secretary for Safety and Consumer Affairs Washington, D. C. 20590	Final Report
	14. Sponsoring Agency Code
	TSA-20

15. Supplementary Notes

16. Abstract

Existing and proposed methods of assessing the hazards involved in transportation of various organic peroxides have been reviewed. Experiments have been carried out to measure the sensitivity of commercial organic peroxides in laboratory tests using impact, explosive shock, and thermal surge stimuli. Recommendations for a hazard classification system are included.

17. Key Words	18. Distribution Statement
Organic Peroxides; Transportation Hazard; Hazard Classification; Test Methods	Approved for public release; distribution unlimited. Document may be released to the National Technical Information Service, Springfield, Virginia 22151, for sale to the public.

19. Security Classif. (of this report)	20. Security Classif. (of this page)	21. No. of Pages	22. Price
Unclassified	Unclassified	56	

Form DOT F 1700.7 (8-69)

REPORT No. TSA-20-72-1

NOLTR 72-63

AN EVALUATION OF ORGANIC PEROXIDE HAZARD CLASSIFICATION SYSTEMS AND TEST METHODS

CARL BOYARS

Chemistry Research Department
Naval Ordnance Laboratory, White Oak,
Silver Spring, Maryland 20910

transpo 72
U.S. International Transportation Exposition
Dulles International Airport
Washington, D.C.
May 27-June 4, 1972

FEBRUARY 1972

FINAL REPORT

Approved for public release; distribution unlimited.

Prepared for

DEPARTMENT OF TRANSPORTATION

OFFICE OF ASSISTANT SECRETARY FOR SAFETY
AND CONSUMER AFFAIRS
Office of Hazardous Materials

Washington, D. C. 20590

NOLTR 72-63 1 March 1972

Under Interagency Agreement DOT-AS-10055, the Naval Ordnance Laboratory, White Oak, has evaluated existing and proposed systems for hazard classification of organic peroxides; has carried out experiments to measure the sensitivity of commercial organic peroxides; and has made recommendations for a hazard classification system. This is the final report under that Agreement. Use of trade names herein does not constitute any endorsement of the products named.

ROBERT WILLIAMSON III
Captain USN
Commander

ALBERT LIGHTBODY
By direction

The contents of this report reflect the views of the Naval Ordnance Laboratory, White Oak, which is responsible for the facts and the accuracy of the data presented herein. The contents do not necessarily reflect the official views or policy of the Department of Transportation. This report does not constitute a standard, specification, or regulation.

CONTENTS

		Page
I.	INTRODUCTION	3
II.	ORGANIC PEROXIDE HAZARD CLASSIFICATION SYSTEMS AND TEST METHODS	5
	Continental European Regulations and Test Methods	5
	United Kingdom Test Methods	7
	The OPPSD Hazard Classification and Test Methods	8
	The United Nations and the Bureau of Mines	11
III.	NOL TESTING PROGRAM ON ORGANIC PEROXIDES	13
IV.	RECOMMENDED TEST METHODS FOR HAZARD CLASSIFICATION OF ORGANIC PEROXIDES	23
V.	RECOMMENDATIONS FOR FURTHER TEST METHOD DEVELOPMENT	33
VI.	ACKNOWLEDGEMENT	34
VII.	REFERENCES	35
APPENDIX A:	Extracts from Referenced Material on Hazard Classification Systems	A-1
APPENDIX B:	NOL/ERL Impact Test Description	B-1
APPENDIX C:	Explosion Hazard	C-1

I. INTRODUCTION

1. To limit to acceptable levels the hazard involved in transportation of organic peroxides, regulation based on intelligent classification criteria and the best available test methods for assessment of the hazards is required. Continuing research on test methods and periodic review of classification criteria are important. International agreement on hazard classification systems facilitates international trade.

2. There are two key aspects involved in establishment of degree of hazard. These are susceptibility (the likelihood that some stimulus (energy input) will initiate decomposition) and damage potential (the probable extent of damage resulting once decomposition is initiated). Tests of susceptibility and/or damage potential are sensitivity tests, if response to a very short-term energy input is being measured, and stability tests if a longer-term energy input is used. (United Kingdom practice favors sensitiveness rather than sensitivity, reserving sensitivity to characterize the desired functioning of an explosive.) The important stimuli are those to which the material may be subjected in shipment, and test methods must reflect this. Damage potential depends on three factors, i.e., the amount of unstable material (including adjoining material whose decomposition may be initiated by the decompostion in any one container), the amount of heat and gas given off by the decomposition reactions, and rate of heat and gas evolved. These factors will determine whether we have an ordinary fire, an explosion spreading flying fragments and firebrands, or a detonation (which is of greater destructive power). Combustion (deflagration) under confinement leads to explosion, and, under suitable conditions of confinement, sufficiently energetic materials may proceed from deflagration to detonation. A material which is sufficiently sensitive and whose decomposition is sufficiently energetic may be directly initiated to detonation by a shock input. Initiating (primary) explosives require no confinement for transition to detonation following thermal or mechanical-thermal input.

3. The basic problem in the hazard of organic peroxides is their thermal instability. Damage potential is a function not only of the inherent instability of organic peroxides but also is increased by reaction with atmospheric oxygen or other oxidizing

substances. Oxidizing materials, including inorganic peroxides, should therefore not be shipped in proximity to organic peroxides in order to prevent interaction of spills in the event of an accident. In this respect, organic peroxides are like fuels and much like commercial organic nitrocompounds and nitrate esters.

4. Organic peroxides are also oxidizing agents for especially reactive oxidizable compounds and are sources of free radicals for initiating exothermic polymerization reactions. Contact with such reactive materials should be avoided in transport. Those organic peroxides which are especially sensitive when pure are usually desensitized by the addition of inert ingredients for commercial transport.

5. In order to provide an improved basis for selection of hazard classification criteria, the test methods and hazard classification systems recommended by other nations and by the organic peroxides industry in the U. S., along with recommendations of the U. S. Bureau of Mines, have been reviewed, and experiments have been carried out to measure the sensitivity of commercial organic peroxides by laboratory tests using impact, explosive shock, and thermal surge stimuli.

6. When information from the United Kingdom is cited below, the term "inflammable", which is standard UK practice is retained; the U. S. Department of Transportation uses the synonymous "flammable" as standard terminology.

II. ORGANIC PEROXIDE HAZARD CLASSIFICATION SYSTEMS AND TEST METHODS

Continental European Regulations and Test Methods

7. A prime requisite for classification criteria for transportation of organic peroxides is that, in addition to meeting the United States' domestic needs, they be compatible with the regulations in force for transportation of such materials in Europe; this would facilitate export sales by U. S. firms. Therefore the documents, RID and ADR,[1,2] detailing the regulations uniformly in effect in most continental European countries will be analyzed herein. Substances which cannot explode on contact with a flame and which are not more sensitive to impact or to friction than dinitrobenzene are not considered explosives under those regulations. Organic peroxides which fall into the explosives category are:

a. benzoyl peroxide, dry or with less than 10% water or with less than 30% desensitizer (all percentages are by weight).

b. cyclohexanone peroxides, dry or with less than 5% water or with less than 30% desensitizer.

c. parachlorobenzoyl peroxide, dry or with less than 10% water or with less than 30% desensitizer.

(It may be noted here that NOL has tested the sensitivity to impact of two of these materials, (a) dry 98.5% benzoyl peroxide and (b) cyclohexanone peroxide with 15% desensitizer, and has found both of them to be quite sensitive, the dry benzoyl peroxide being especially so.)

8. Those organic peroxides which are not classified as explosives or which do not contain such a large quantity of dry and inert solids so as to completely remove them from the hazardous classification are in Class VII (Organic Peroxides). Class VII is broken down into Groups as detailed below. The common feature of Group A materials is that they are required to be packed in containers which are closed and leak-proof. Group B, which includes (1) MEKP with not less than 50% desensitizer and (2) tert-butyl hydroperoxide with not less than 20% tert-butyl peroxide (without desensitizer), requires that the containers be fitted with a venting device to allow internal pressure to adjust to atmospheric pressure yet prevent liquid from splashing out and impurities from entering in all circumstances. Note that over 50% MEKP is excluded from shipping. Group B also includes the same 2 materials in the form of solutions of not more than 12% concentration in inert solvents; in this case they must be shipped in closed and leak-proof containers. Group C consists of peracetic acid; this is extremely corrosive.

9. Besides the three organic peroxides classified as explosives (Class Ia), RID and ADR list some two dozen organic peroxides which are acceptable for conveyance under specified minimum degrees of dilution or desensitization with appropriate materials. Other desensitized or dissolved organic peroxides are acceptable (Group D) in quantities not exceeding one kg per package, provided they have at least the same storage stability as the listed acceptable materials.

There is also provision for conveyance by road, but not by rail, of 8 listed organic peroxides (ADR Group E) which require refrigeration because of instability at normal temperatures; these are acceptable for shipment as organic peroxides, even though some of them would be classified by the test methods at explosives. It is well known that rates of chemical decomposition increase with temperature, hence thermally unstable materials are shipped more safely in a refrigerated state.

10. The test methods of RID and ADR call for drying of all materials in a vacuum desiccator before they are tested for sensitivity. Such a procedure makes the materials appear more sensitive in the case of those organic peroxides which are moistened or diluted with volatile substances to decrease their sensitivity. Such a procedure is invalid for materials which are shipped in vapor-tight, leak-proof containers.

11. RID and ADR describe tests which are primarily for explosives. These include ignition in a red hot crucible and ignition with a burning match. Presumably some organic peroxides can be classified as explosives on the basis of these test results. Thermal ignition tests specifically for organic peroxides are listed as optional tests. These include the Koenen (BAM) test, which is called a steel tube test in RID and a steel cup test in ADR, and the pressure vessel (RVO/TNO) test. Construction of the apparatus and method of heating the sample are described in great detail for both of these tests. In both tests, the organic peroxide sample is heated at a constant rate and the time to first visible evidence of decomposition as well as time to explosion is noted. Although it is recognized that thermal sensitivity increases with decreasing times, no minimum time is specified for characterizing the material as explosive. In the first test, the sample is heated in a steel tube and the pressure developed is partially vented through an orifice of variable diameter. In the second test, the sample is heated in a pressure vessel fitted with an orifice of variable diameter for partial venting of pressure and with a bursting disk (located elsewhere on the pressure vessel) designed to withstand 5 kg/cm^2 pressure. The organic peroxide is considered explosive if it destroys the steel tube when the orifice $\geqq$ 2.0 mm or if it ruptures the bursting disk of the pressure vessel when the orifice $\geqq$ 9 mm. Yet a UK report[3] indicates that ADR has placed some materials (including t-butyl perbenzoate, for which refrigerated shipment is not required) in Class VII despite results of these thermal tests.

12. The tests for sensitivity to impact described in ADR and RID are identical. ADR refers to these as tests for sensitivity to shock; RID more properly calls it sensitivity to impact. They are drop-weight impact tests in which the drop-weight is called a fall-hammer in RID and a monkey in ADR. Two alternative test procedures and apparatuses are described. One of the apparatuses has special provision for testing liquids as well as solids. In neither procedure are the test data treated statistically.

13. Both ADR and RID describe the same two alternative tests for sensitivity to friction. Each test involves qualitatively describing the type of ignition. In one test, the material is ground with an unglazed pestle in an unglazed procelain mortar. In the other test, roughened procelain plates and rods are used along with an electrical mechanical grinding method with variable weights on the rod; this allows a quantitative measurement and reduces human operator variability.

14. In their discussion of substances liable to spontaneous combustion, inflammable liquids, and inflammable solids, ADR and RID do not mention organic peroxides, except for those inflammable liquids, e.g., ether and certain heterocyclic oxygenated compounds, which easily form peroxide contaminants. Yet the extent to which organic peroxides are a flammability hazard in transportation must be considered. The applicable test described is the determination of flash point of liquids (including pastes). For this, a number of apparatuses and methods are considered suitable, one group for use at temperatures up to 50°C and another group for use at temperatures above 50°C. The Tag apparatus with ASTM Standard D 53/46 is included in the first group and the Pensky-Martens apparatus with ASTM Standard D 93/46 is the second. The only exception is for viscous materials, for which a German or British (Institute of Petroleum Method A of Standard 170/59) method is specified.

United Kingdom Test Methods

15. The UK assessment of and test methods for organic peroxides are described in RARDE 21/70 and 18/63.[3,4] The test methods include chemical analysis for identification and available oxygen; sensitivity to impact, friction, and spark ignition; energy output when subjected to detonative shock, using a ballistic pendulum or Trauzl lead block; Koenen, RVO/TNO pressure vessel, and tests of rate of pressure rise following ignition in a bomb; adiabatic self-heating; and measurement of half-life times at constant temperatures. Based on test results and experience, an organic peroxide is placed in one of 6 categories:

(1) spontaneous decomposition hazard; if involved in a fire, it adds materially to its fierceness (most commercial organic peroxides).
(2) highly inflammable, flash point below 23°C (t-butyl peroxide)
(3) corrosive (peracetic acid)
(4) explosion hazard
(5) non-hazardous
(6) properties unknown

16. The recent status of co-ordination of test methods between the UK and continental European nations (Netherlands and Germany) follows.[5] Impact and friction tests are different, but this is not considered to be a difficulty because the test results of the organic

peroxides on any apparatus are compared with those of standard explosive on the same apparatus. The UK uses the same Koenen, RVO/TNO pressure vessel, and rate of pressurization tests as the Continent. They are proposing to adopt a German internal heating test and they are trying to correlate their ballistic pendulum test with a Continental propagation-of-detonation test. It is planned to continue work towards complete co-ordination of the UK with the Netherlands and Germany.

The OPPSD Hazard Classification and Test Methods

17. The Organic Peroxide Producers Safety Division (OPPSD) "approved" tests properly recognize that establishment of degree of hazard involves two key aspects.[6] These are susceptibility (the likelihood that some stimulus will initiate decomposition) and damage potential (the probable extent of damage resulting once decomposition is initiated). The classification of product proposed by OPPSD provides for 5 classes, based upon whether test results in the damage potential and susceptibility categories are rated as "maximum", "intermediate", or "low" hazards. There is also a provision that excessively hazardous materials not be classified as commercial organic peroxides; presumably they would be classified as explosives. Pressure vessel (RVO/TNO type), Trauzl, rapid heat (type of decomposition), and self accelerating decomposition (SADT) (type of decomposition) tests are identified as damage potential tests. Impact, burning (flame height), flash point, and SADT (temperature) tests are identified as susceptibility tests. A "maximum hazard" rating on one test in each category (damage potential and susceptibility) places the material in Class I. A maximum rating in one test in either category places the material in Class II. Classes III, IV, and V represent decreasing degrees of hazard in this pattern. The test methods are similar, for the most part, to those published previously.[7,8] No test is recommended for propagation of detonation or for friction sensitivity.

18. All of the OPPSD tests are related to some stimulus to which the material may be subjected in transport. The impact apparatus is a Bureau of Explosives Impact Tester; a positive test result depends upon qualitative visual or aural observation. Sample size is as small as practical (0.01 - 0.025 gm). Despite use of the term "shock" in describing this test, the stimulus is not a true hydrodynamic shock; unfortunately this misuse of "shock" is quite common. Test data are subjective, qualitative, and not treated statistically. This impact test is inappropriate for liquids.

19. The burning test seems more a test of damage potential rather than susceptibility. The only measure of susceptibility is the time to ignition, but the OPPSD does not use that value for purposes of classification. The flame height, which is used for classification, is actually a measure of the likelihood of propagation of fire, once initiated, to the surroundings. Flash point is a useful standard test for determining flammability. PVT is a test

of both susceptibility and damage potential. Essentially, it measures the likelihood of a pressure burst in a vented vessel under fixed rapid heating conditions. The vent size for a 50% probability of pressure burst is determined; this is of course a measure of susceptibility. It is a measure of damage potential only in that it indicates which materials will not undergo a pressure burst even with minimum venting. The OPPSD discussion of interpretation of PVT is somewhat peculiar for a test which they identify as a damage potential test, e.g., "its use should be limited to the testing of organic peroxides whose damage potential has been predetermined by other methods" and the "PVT is generally used in conjunction with other safety testing procedures as a guide in overall evaluation of a compound's damage potential". Those statements are not consistent with the fact that a "maximum", "intermediate", or "minimum" hazard rating in PVT is assigned solely on the basis of vent size. OPPSD implies that organic peroxides which "burn very vigorously and/or exhibit considerable brisance" in impact testing or response to blasting cap shock are too hazardous for PVT testing. They also warn that mass effects in commercial packages may lead to more severe damage than is indicated by their PVT test.

20. The Trauzl test is a measure of energy release, and OPPSD correctly identifies it as a damage potential test. The OPPSD statement that "the test measures the sensitivity of organic peroxides to a blasting-cap shock and the potential energy released under these conditions" correctly implies that only an organic peroxide sensitive enough to be initiated to some energy-releasing reaction by the blasting-cap shock will contribute to the expansion of the lead block.

21. The rapid heat test and the SADT (and, in a limited sense, the flash point) are thermal stability tests. The rapid heat test is a relatively small scale (1 gm) test but depends on qualitative description of the type of decomposition for hazard classification. The SADT is carried out on the largest commercial package (up to 55 gal.) and is run for up to 7 days. The SADT susceptibility to decomposition is a quantitative measure (temperature), and the damage potential is assessed on a qualitative description of the type of decomposition.

22. The UK and ADR/RID classification schemes appear to be intrinsically more sound than the OPPSD's. By specifying the nature of the hazard, i.e., highly inflammable, corrosive, or explosive, rather than only a non-specific degree of hazard, more useful information is provided for determining type of packaging, compatibility of other freight, and proper precautions or remedial measures in the event of an accident involving the transporting vehicle or vessel.

23. There are significant differences between the standards that OPPSD proposes and those of the European nations, and these result in serious differences in classification of hazard. The UK considers a flash point below 73°F "highly inflammable"[3], but

OPPSD defines a flash point of 20°F to 80°F as only an "intermediate hazard". As a result, tert-butyl peroxide is characterized as highly inflammable (Category 2) by UK but as only an intermediate hazard (Class III) by OPPSD. The U. S. Code of Federal Regulations on Transportation[9], in sections 173.115 and 173.119, defines flammable liquids as those with flash points at or below 80°F and makes special provision for those which have flash points of 20°F or below. Lucidol's hazard classification system for commercial organic peroxides[8] regards a flash point below 80°F as a maximum hazard.

24. The UK and continental European nations run the pressure vessel test with 10 grams of organic peroxide and a rupture diaphragm of 5.4 ± 0.5 kg/cm^2 bursting strength, and they regard a test result (in one of 3 trials at a fixed diameter aperture) of 9 mm or higher as requiring classification as an explosive substance. In contrast, OPPSD uses only 5 grams in this test with a rupture diaphragm of 90 to 105 psig (6.9 ± 0.5 kg/cm^2) bursting strength, runs only a single trial at any fixed aperture, and considers a test result of up to 12 mm as only an intermediate hazard. Each of these 4 differences between the ADR/RID and the OPPSD versions of the PVT tends to place the material in a less hazardous category when tested by the OPPSD procedure. The interior dimensions of the pressure vessel are not clearly given in the OPPSD document; we assume the interior volume of the OPPSD pressure vessel is the same as that described in earlier publications[7,8], i.e. 235 cc. We have calculated the volume of the pressure vessel in ADR/RID to be 195 cc. The larger interior volume of the OPPSD pressure vessel also tends to decrease the probability of diaphragm rupture in the test. The heating rate required by ADR/RID for PVT is 2,700 kcal/hr; OPPSD uses a 700 watt (equivalent to 602 kcal/hr) heater. This substantially lower heating rate in OPPSD favors slower decomposition rates of the organic peroxides and therefore makes them less likely to burst the diaphragm in the PVT. Possibly as a result of such differences in hazard evaluation procedures, 60% MEKP is a Class III intermediate hazard according to OPPSD, a Category 4 explosive hazard in the UK, and not even accepted for conveyance in Europe. The differences in classification may also be due to the fact that 60% MEKP from various manufacturers may have different test results, but it is certainly true that the PVT of OPPSD is a far less stringent test than the PVT of ADR/RID which is standard in continental Europe and the UK.

25. OPPSD rates 85% cyclohexanone peroxide an intermediate hazard (Class III) but indicates that this material also may have different test results and classification when supplied by different manufacturers. The UK and continental European regulations put this material in the explosion hazard category. The reason for this difference may be differing interpretations of impact test data. As mentioned in paragraph 1, ADR and RID consider impact sensitivity greater than dinitrobenzene a reason for classifying the organic peroxide as an explosive. OPPSD's drop-weight impact apparatus is that of the Bureau of Explosives; positive drop test results at less than 4" drop are rated a maximum hazard, at 4" to 10" an intermediate hazard, and over 10" a low hazard.

It is interesting to compare this interpretation with that of the Explosives Hazard Classification Procedures of the Army, Navy and Air Force.[10] Using the same Bureau of Explosives impact apparatus, a composition with explosive sensitivity of less than 4" is DOT Restricted and requires special shipping instructions from DOT; impact sensitivity tests producing explosion between 4" and 10" are DOT Class A (Military Class 7, mass-detonating explosives). It should be mentioned here that the damage potential of an explosion of organic peroxide is much less than that of the same quantity of high explosive.

The United Nations and The Bureau of Mines

26. A United Nations brochure[11] on hazardous materials gives little information on organic peroxides, and what little it gives is misleading. They list organic peroxides as a subclass of oxidizing substances. This is not its major hazard. (See the Introduction section of this report.) Indeed, organic peroxides should be carried separately from oxidizing substances under proper safety regulations.

27. The Bureau of Mines has made the following recommendations on test methods:[12]

(1) Card gap for shock sensitivity
(2) Differential thermal analysis
(3) Adiabatic Calorimeter
(4) JANAF Test #4[13] for impact sensitivity of liquid peroxides
(5) Impact test for impact sensitivity of solids
(6) BAM or Dutch RVO/TNO Pressure Vessel test
(7) Friction Sensitivity test

28. Card gap tests are reasonable for solids but not for liquids. With liquids, shock initiation of destructive reaction is often a function of the shock impedance in the confining material as well as of the intrinsic sensitivity of the liquid. Initiation often occurs at shock reflection or by cavitation. Hence, using the standard steel confinement, one could not predict the response of the liquid to shock in other than that test diameter or that container. Shock initiation of solids in the card gap test occurs axially. Therefore the card gap test is a valid test of shock sensitivity of solids.

29. Differential thermal analysis (DTA) can give information concerning the temperatures at which decomposition occurs and the rate of heat evolution. Unfortunately, these DTA data can be masked by simultaneous heat-absorbing processes such as gas evolution, and DTA data may therefore give a false indication of absence of hazard.

30. We have mentioned above (paragraphs 2 and 17) the two key aspects of degree of hazard, one of which is damage potential. Damage potential depends on three factors, namely the amount of

unstable material, the amount of heat and gas given off by the decomposition reactions, and the rate of heat and gas evolved in these reactions. Adiabatic calorimetry measures the amount of heat given off. This is useful information when combined with the other factors; it does not, however, measure the damage potential from reaction of the organic material with atmospheric oxygen or other oxidizing agents.

31. Use of impact testers designed specifically for liquids or for solids, an appropriate friction sensitivity test, and a vented-vessel pressure-burst test, as recommended by the Bureau of Mines are all desirable.

III. NOL TESTING PROGRAM ON ORGANIC PEROXIDES

32. Drop weight impact sensitivity, thermal surge sensitivity, and sensitivity to explosive shock have been measured on a number of commercial organic peroxides. The results are tabulated below.

33. Drop weight impact tests measure the likelihood of a propagating deflagration explosion being initiated by mechanical impact. In the tests on solid samples, they are also a measure of the likelihood of initiation by friction. In the apparatus used for liquid samples (the NOL modification[14,15] of "Test Number 4"[13]), the probability of initiation of deflagration by mechanical impact of a sample containing an air bubble (bubbles sensitize liquids) is measured, and the resulting deflagration process can be characterized in terms of delay time and burning rate. As a note of caution, tetranitromethone, which appears insensitive in this apparatus, is a dangerous and powerful explosive when mixed with a little fuel.

34. In general, drop weight impact tests on the NOL/ERL apparatus (for description, see references 16 and 17 and Appendix B) do not measure the likelihood of detonation of a sample; they provide no measure of the amount of damage that can be expected following the initiation of deflagration. They indicate only the ease of initiating deflagration by mechanical impact and that the deflagration propagates under those test conditions. A material may appear quite sensitive in this impact test yet be unlikely, in limited quantities, to do extensive explosive damage. On the other hand, a material which is off the scale of the impact machine may be a powerful explosive when suitably initiated.

35. The thermal surge test[18] measures the likelihood of initiation of explosion by a heat source such as flame or electrical short circuit. This apparatus is usable only for liquid samples or for solids which can be melted without decomposition. The sample, in a small metal tube, is rapidly heated by a condenser discharge, and the time to explosion is measured as a function of temperature.

36. The NOL gap test[10,19,20,21] measures the likelihood of initiation and propagation of detonation in the material tested when it is subjected to an explosive shock under the test conditions. This test is normally run here only on solid samples. Although it can be run on liquids, data from such tests on liquids is difficult to interpret in terms of characterizing the material under test.[22] This is because the nature of the container affects the mode of initiation of detonation in the liquid, as discussed in paragraph 28.

37. In the gap test, the shock from detonation of a standard explosive charge is attenuated by passing through a number of plastic "cards" before contacting the material under test. The test result is positive when detonation propagates through the test sample and punches a hole in a steel witness plate. The larger

the critical "card gap" at which this positive result can be obtained, the more sensitive is the material being tested. When no puncture of the witness plate is obtained at zero card gap but some damage to the steel witness plate is evident, a "modified" or "extended" test may be used. The modified test consists of placing an unconfined cylinder of Comp B explosive between the material under test and the witness plate. The extended test uses Comp B encased in a steel cylinder at that location. Use of this "explosive witness" lets us know if the reaction induced in the test material is vigorous enough to initiate detonation in the explosive witness. It is easier to initiate detonation in the confined than in the unconfined Comp B. In all the extended tests reported herein, a single steel tube of double the normal length was used to confine the organic peroxide and the Comp B; this provides a more severe test condition than the use of two normal length steel tubes. Only under very special conditions will a conventional military explosive fail to give a puncture of the witness plate in the regular test at zero gap. The solid or paste peroxides were tested in the regular gap test at their normal packing density, and all failed to puncture the witness plate (Table 4). Therefore these materials do not have the damage potential of the same quantity of conventional military explosives, despite the considerable sensitivity to initiation by impact demonstrated by dry Benzoyl Peroxide (Table 1).

38. Table 1 shows that dry Benzoyl Peroxide is extremely sensitive to initiation by impact, with a sensitivity between that of lead azide and RDX. The 85% Cyclohexanone Peroxide is also impact sensitive, less sensitive than RDX but more sensitive than TNT; it shows about the same impact sensitivity as ammonium perchlorate of 8μ particle size. Each of these two peroxides shows the usual effect of increased impact sensitivity in the presence of grit particles. Lauroyl Peroxide and the 50% Benzoyl Peroxide pastes are insensitive to impact.

39. Table 2 shows that the liquid samples are all quite insensitive to impact. Only two of the materials tested showed any sort of reaction, and this reaction was not sufficient to be considered a positive test in this apparatus. Nevertheless this is evidence that 75% t-Butyl Peracetate in mineral spirit and 90% t-Butyl Hydroperoxide cannot be considered inert to impact.

40. In the thermal surge test, the low energy of the organic peroxides (as compared to conventional military explosives) is again evident. Of the samples tested, t-Butyl Hydroperoxide is the most sensitive and Lauroyl Peroxide the least. The Ketone Peroxides are incompatible with the stainless steel tubing used in this test.

41. For the gap tests (Table 4), samples were first tested at normal packing density in the regular test. Then, because of the negative results obtained, the test was made more sensitive, as indicated in paragraph 37, and further testing was carried out at both normal packing densities and at greater densities (compressed material). More porous samples are easier to initiate, but, if density is too low, there may not be enough material present to provide the energy needed for a positive test result. At normal

packing density, 96.5% Lauroyl Peroxide, 98.5% Benzoyl Peroxide, and 85% Cyclohexanone Peroxide in dibutylphthalate all give a positive result in the extended tests. Of these, the Lauroyl Peroxide becomes sufficiently less sensitive when compressed so that it gives a negative test result. The positive results in the extended tests show damage caused by the shock initiated reactions of these materials is roughly comparable to that of ammonium nitrate.

TABLE 1

Drop Weight Impact Test With NOL/ERL Apparatus for Solid Samples

Material	h(cm) on Sandpaper	Standard Deviation	h(cm) on Bare Tools	Standard Deviation
98.5% Benzoyl Peroxide (Dry) (LUCIDOL®-98)	10	0.3	19	0.1
85% Cyclohexanone Peroxide in dibutylphthalate (LUPERCO® JDB-85)	43	0.3	107	0.1
96.5% Lauroyl Peroxide (ALPEROX®)	(a)		(a)	
50% Benzoyl Peroxide in tricresyl phosphate (LUPERCO®ATC)	(a)		(a)	
50% Benzoyl Peroxide in plasticizer (fire-resistant) (LUPERCO®AFR)	(a)		(a)	
Ammonium Perchlorate (8μ particle size)	50	0.1	100	0.1
Lead azide	4	0.1		
RDX	24	0.1		
TNT	157	0.1		

Notes:

(a) 50% point beyond apparatus limits (2.5kg - 320 cm).

The 96.5% Lauroyl Peroxide and the 85% Cyclohexanone Peroxide with plasticizer were run as received and also ground to a fine powder with a mortar and pestle. The impact sensitivity of this smaller particle size material agreed with that found for the material as received.

The organic peroxide samples were run at 25-27°C.

TABLE 2

Drop Weight Impact Test With NOL Test #4 Apparatus for Liquid Samples

Material	50% Point[a] (kg/cm)	Deflagration Rate (psi/μsec)
60.5% Methyl Ethyl Ketone Peroxide (LUPERSOL® DDM)	b	—
Ketone Peroxide (non-regulated) with oxygen activity equal to 47% MEKP (LUPERSOL® DX)	b	—
70% t-Butyl Hydroperoxide	b	—
98.5% Di-t-Butyl Peroxide	b	—
75% t-Butyl Peracetate in mineral spirit (LUPERSOL® 70)	7.8/10[c]	0.5
90% t-Butyl Hydroperoxide	7.4/10[d]	1.0
NITROMETHANE	b	—
TETRANITROMETHANE	b	—
NITROGLYCERIN (NG)	2.2/1	85
70% NG/30% DIBUTYLPHTHALATE	6.0/1	11
60% NG/40% DIBUTYLPHTHALATE	7.2/10	5
ETHYL NITRATE	1.8/1	24
N-PROPYL NITRATE	1.8/8	18

TABLE 2 (CONT)

Notes: All samples were run at room temperature (25-27°C).

a. When the 50% point cannot be obtained at the 1 cm level, even at maximum weight (8kg), tests were then carried out at 2 cm and stepped to greater heights similarly.

b. 50% point beyond limits of the apparatus (8kg/10 cm).

c. A pressure buildup in the cup was noted, but no noticeable change was found in the material left in the reaction cup. Neither the diaphragm nor the O-ring were damaged.

d. A pressure buildup was noted in the cup. Evidence of burning (charred solid material) was found in the reaction cup. Neither the diaphragm nor the O-ring were damaged

TABLE 3

Thermal Surge Test

	% which did not fire	% which fired but did not break tube	% of points between 10-5000μsec	Temperature for 250μsec delay time to explosion
96.5% Lauroyl Peroxide	100	0	--------	--------
90% t-Butyl Hydroperoxide	0	28	64	538°C
70% t-Butyl Hydroperoxide	0	16	81	587°C
75% t-Butyl Peracetate in mineral spirit	5	25	35	602°C
98.5% Di-t-Butyl Peroxide	28	25	15	771°C
60.5% Methyl Ethyl Ketone Peroxide	---------- (a) ----------			
Ketone Peroxide (non-regulated) with oxygen activity equal to 47% MEKP	---------- (a) ----------			
TRINITROBENZENE	0	0	100	827°C
PICRIC ACID	0	0	100	717°C
TNT	0	0	100	745°C
NITROGLYCERIN (NG)	0	0	100	277°C
70% NG/30% DIBUTYLPHTHALATE	0	0	100	405°C
60% NG/40% DIBUTYLPHTHALATE	0	0	100	491°C
ETHYL NITRATE	0	0	100	415°C
n-PROPYL NITRATE	0	0	100	550°C

TABLE 3

Thermal Surge Test (CONT)

Notes:

(a) Peroxide sample seemed to react with the stainless steel tubing. A great deal of gassing was noted at the opening of the tubing resting in the sample.

90% t-Butyl Hydroperoxide --- of the percentage of go's (64%), only 4% were one hole breaks.

70% t-Butyl Hydroperoxide --- of the percentage of go's (81%), 27% were one hole breaks. Due to the insensitivity of organic peroxides to thermal surge, all go's including one hole go's are included to obtain the 250μsec delay time to explosion. When testing the sensitivity of explosives to thermal surge, the one hole go's are disregarded.

Only points between 10 and 1000μsec were used to obtain the 250μsec delay time to explosion.

TABLE 4

Gap Tests on Organic Peroxides (Results at Zero Gap Using Pentolite Boosters)

MATERIAL	DENSITY (g/cc)	TYPE OF TEST	RESULT	REMARKS
96.5% Lauroyl Peroxide (ALPEROX®)	0.46	Regular	?	Slight dent in plate
	0.50	Modified	—	Flat plate, no Comp B recovered
	0.49	Extended	+	Good hole in plate
	0.75	Modified	—	Flat plate, Comp B recovered
	0.75	Extended	—	Flat plate, witness tube recovered undamaged, no Comp B remained
98.5% Benzoyl Peroxide (Dry) (LUCIDOL®-98)	0.54	Regular	?	Slight dent in plate
	0.53	Modified	?	Dimpled dent greater than above, no Comp B recovered
	0.53	Extended	+	Good hole in plate
	0.75	Modified	—	Flat plate, no Comp B recovered
	0.75	Extended	+	Good hole in plate
85% Cylohexanone Peroxide in dibutylphthalate (LUPERCO® JDB-85)	0.53	Regular	?	Slight dent in plate
	0.53	Modified	?	Slight dent in plate, no Comp B recovered
	0.53	Extended	+	Good hole in plate
	0.75	Modified	—	Flat plate, no Comp B recovered
	0.75	Extended	+	Good hole in plate
50% Benzoyl Peroxide in plasticizer (fire resistant)	1.10	Regular	—	Liquid mix, flat plate, residue on plate
	1.11	Modified	—	Liquid mix, flat plate, Comp B recovered
	1.16	Extended	—	Liquid mix, flat plate, Comp B recovered

TABLE 4

Gap Tests on Organic Peroxides (Results at Zero Gap Using Pentolite Boosters) (CONT)

MATERIAL	DENSITY (g/cc)	TYPE OF TEST	RESULT	REMARKS
50% Benzoyl Peroxide in Tricresyl Phosphate (LUPERCO®ATC)	1.23	Regular	–	Liquid mix, flat plate, residue on plate
	1.22	Modified	–	Liquid mix, flat plate, Comp B recovered
	1.24	Extended	–	Liquid mix, flat plate, Comp B recovered
AMMONIUM NITRATE (PRILLS)	0.850	Extended	+	Go at 50 cards

All tubes were loaded at uncompressed bulk density except the ones at 0.75 g/cc.

IV. RECOMMENDED TEST METHODS FOR HAZARD CLASSIFICATION OF ORGANIC PEROXIDES

42. An extensive R&D effort on organic peroxide test methods is needed, but, because organic peroxides have been and are being manufactured and transported, hazard classification procedures are needed now. The procedures recommended will be imperfect because of the limited state of knowledge, but they will be the best that can be selected by evaluating the R&D that has already been done on test methods in other nations as well as the U. S. Any regulations promulgated should be regarded as a living document, subject to amendment and revision as we learn more.

43. A material which can be initiated to detonation in the regular card gap test (see paragraphs 36 and 37) or which can be detonated by use of a blasting cap[10] constitutes a hazard equivalent to a conventional high explosive. Highly concentrated performic and peracetic acids, which are described as dangerously explosive and detonable,[23] are never transported commercially. None of the commercial organic peroxides we have tested detonates in the regular card gap test.

44. Under U. S. transportation regulations[9] (sections 173.157 and 173.158), benzoyl peroxide (dry) and cyclohexanone peroxide (wetted with 10% desensitizer) are not classified as explosives. Their impact sensitivity (see Section III of this report) would classify them as explosive substances under the continental European criteria,[1,2] and they are so classified there. Under the U. S. Department of Defense Explosives Hazard Classification Procedures,[10] restrictions would probably be placed on their transportation as explosives (see paragraph 25). But they are not military explosives or components of such explosives; this presumably accounts for their DOT classification.

45. On the whole, it is difficult to draw up a hazard classification system for organic peroxides which is consistent with hazard classification for other materials. This is because hazard classification systems for other materials appear inconsistent. For example, DOT classifies[9] picric acid as a high explosive and ethyl nitrate as a flammable liquid. Yet ethyl nitrate is detonable, its explosion causes a lead block expansion (Trauzl test) 20% greater than that of picric acid, and its heat of explosion is over half that of nitroglycerin.[24] Non-detonable propellants and pyrotechnics are Class B explosives ("which in general function by rapid combustion rather than detonation"[9]), but 50 pounds of dry benzoyl peroxide may be shipped in a single container, classified as an oxidizing material. Some recognition of the hazard of dry benzoyl peroxide exists in the requirement that the 50 pounds be packed in inner containers of 1 pound maximum capacity and each inner container be surrounded by fire-resistant cushioning material.

46. There are four degrees of hazard (below classification as an explosive) by which organic peroxides can be characterized because of their intrinsic instability. These are, in descending order of danger:

I. Explosion Hazard
II. Flammable and Spontaneous Decomposition Hazard
III. Spontaneous Decomposition Hazard(Materials which, because of their thermal instability and the fact that they carry part of the oxygen needed for their complete combustion, substantially increase the fierceness of a fire in which they are involved)
IV. Non-regulated (hazard not greater than that of materials commonly shipped as non-hazardous)

Organic peroxides which are not in Class I may also be explosion hazards under suitable circumstances; as is true of many common materials. Materials which fall in Classes I, II, III, may also fall in Group A (for materials whose gas evolution rate is so great that a gas venting device is required in the container) or in Group B (which must be shipped under refrigeration because then decomposition rate at ambient temperature is too great). Some organic peroxide may also present another type of hazard, e.g., corrosive, toxic, etc. That type of hazard is determined by experience or by existing test methods for corrosivity, toxicity, etc., and is additional to classification of the organic peroxide in Classes I, II, III, and IV and Groups A and B.

47. If a commercial organic peroxide is very easily ignited (by impact, friction, spark, heat, or flame) and is also quite likely to cause explosive damage when subjected to explosive shock or a fire, it is an explosion hazard (Class I). Its explosion is not as damaging as the same amount of high explosive. The damage potential may be comparable to that of ammonium nitrate, but it is much more susceptible, i.e., it is much more likely to start the fire that will lead to its explosion. A Class II material is one which is very easily ignited and in which fire propagates especially readily but is not so likely to cause explosive damage. A Class III material is not quite so easily ignited as those in Classes I and II nor does fire propagate as readily.

48. The recommended criteria for classification follow. A material should be placed in the most hazardous classification that any test result (or pair of test results when two tests are required for classifying) indicates.

A. Regular card gap test (see paragraphs 36 and 37) at normal packing density, for granular solids, pastes, and slurries.
   (1) Test procedure --- reference (10), start at zero cards
   (2) Interpretation of results --- (50% probability of detonation)

a. 70 or more cards --- Class A Explosive
b. Zero to 69 cards --- Class B Explosive
c. No detonation in 3 tests at zero cards, but evidence of deformation of witness plate --- Class B Explosive or Class I, depending upon results of other tests
d. No evidence of deformation of witness plate in 3 tests at zero cards --- Class IV unless otherwise indicated by other tests.

(3) Rationale --- this is a standard test, indicating the damage potential in response to the stimulus of other material detonating nearly.

(4) Limitations --- not applicable to liquids, for which further test development is needed.

B. RVO/TNO pressure vessel test (see paragraph 11)

(1) Test procedure --- pages 253-254 and 263-264 of reference (1).

(2) Interpretation of results --- (rupture of diaphragm)

a. 9 mm or greater orifice --- Class B Explosive or Class I, depending on results of other tests.
b. 5 mm or greater but less than 9 mm --- Class II or III, depending on results of other tests.
c. Less than 5 mm --- Class IV unless otherwise indicated by other tests.

(3) Rationale --- this is a standard European test and has also been evaluated by the Bureau of Mines. It indicates the damage potential in response to the stimulus of a surrounding fire.

(4) Limitations --- not applicable to materials which are moistened or diluted with volatile substances, unless these are transported under conditions which allow loss of desensitizer by vaporization.

C. BAM steel tube test (see paragraph 11)

(1) Test procedure --- pages 251-253 and 262 of reference (1)

(2) Interpretation of results --- (destruction of tube)

a. 2.0 mm or greater orifice --- Class B Explosive or Class I, depending on results of other tests.
b. 1.0 mm or greater but less than 2.0 mm --- Class II or III, depending on results of other tests.
c. No destruction at 1.0 mm --- Class IV unless otherwise indicated by other tests.

(3) Rationale --- same as Test B, for which this is an alternative. We have no data to indicate a preference for one over the other.

(4) Limitations --- same as Test B.

D. Self accelerating decomposition test (SADT, see paragraphs 17 and 21 and Appendix A).
   (1) Test procedure --- reference 6
   (2) Interpretation of results --- (test temperature and description of damage)
      a. Considerable damage to test oven --- Class I
      b. Considerable damage to container and possible slight damage to test oven --- Class II or III, depending on results of other tests.
      c. No damage to oven and some or no damage to container --- Class IV unless otherwise indicated by other tests.
      d. Decomposition temperature no more than 11°C (20°F) above highest anticipated ambient temperature in transportation --- Group B.
   (3) Rationale --- This is a test carried out on the largest commercial package. If the test indicates the material to be Class I, the shipper may well want to consider repackaging and reducing the size of the package to reduce the hazard. Each test is carried out for 7 days at constant temperature, therefore it provides a reasonable test of long term thermal stability.
   (4) Limitations --- Use of the "largest commercial package" may give a false indication of safety when a number of identical packages are being transported in close proximity.

E. Drop weight impact sensitivity for granular solids and pastes
   (1) Test procedure --- Use material in the form in which normally shipped; do not grind, sieve, or compact. The NOL/ERL apparatus and techniques are preferred (paragraphs 33 and 34; references 16 and 17; and Appendix B). The test is to be carried out both with bare tools and with sandpaper, and comparison is to be made with the standard materials, RDX and meta-dinitrobenzene, under the same test conditions. Sensitivity greater than that of the reference standard under either test condition gives results a or b (below), respectively.
   (2) Interpretation of results --- (50% probability of ignition)
      a. Sensitivity greater than that of RDX --- Class B Explosive if test A gives result A(2)c, test B gives result B(2)a, or test C gives result C(2)a. Class II if test B gives result B(2)b, test C gives result C(2)b, or test D gives result D(2)b. Class III otherwise.

b. Sensitivity greater than that of meta-dinitrobenzene --- Class I if test A gives result A(2)c, test B gives result B(2)a, or test C gives result C(2)a. Class III otherwise.

c. Sensitivity equal to or less than that of meta-dinitrobenzene --- Class IV unless otherwise indicated by other tests.

(3) Rationale: This provides a test of sensitivity to impact alone (bare tools) and to combined impact and friction (snadpaper). Many years of experience with this apparatus show good reproducibility of test results. Unlike the Bureau of Explosives procedure, subjective interpretation is eliminated and data are treated statistically. Use of meta-dinitrobenzene, as a standard reference material is in accordance with European regulations[1,2] and permits the use of other impact apparatuses which can show the same relationship between reference material and the material being tested. European regulations require that any organic peroxide with impact sensitivity greater than that of meta-dinitrobenzene be classified as an explosive substance. That seems unnecessarily rigorous. RDX is quite sensitive to impact and friction; therefore its use as a bench mark for classification as an explosive seems justified.

(4) Limitations --- This test is not applicable to liquids or slurries.

F. Drop weight impact sensitivity for liquids and slurries

(1) Test procedure --- The NOL modification[14,15] of "Test Number 4"[13] is preferred (paragraph 33 and 34) because it permits better characterization of various aspects of sensitivity. However the unmodified "Test Number 4" apparatus is in wide use and commercially available; it may therefore be used to give the minimum information needed for hazard classification.

(2) Interpretation of results --- (impact height and weight for 50% point; with the NOL modification, deflagration rate can also be compared)

a. Sensitivity greater than that of a solution of 70 weight % nitroglycerin: 30 weight % dibutylphthalate --- Class B Explosive if test A gives result A(2)c, test B gives result B(2)a, or test C gives result C(2)a. Class II if test B gives result B(2)b, test C give result C(2)b, or test D gives result D(2)b. Class III otherwise.

b. Sensitivity greater than that of a solution of 60 weight % nitroglycerin: 40 weight % dibutylphthalate --- Class I if test A gives

result A(2)c, test B gives result B(2)a, or test C gives result C(2)a. Class III otherwise.

c. Sensitivity equal to or less than that of 60 nitroglycerin: 40 dibutylphthalate --- Class IV unless otherwise indicated by other tests.

(3) Rationale --- "Test Number 4" and its modification determine sensitivity of liquids to impact when an air bubble is entrapped in the liquid. This sensitizes the liquid and simulates the most hazardous (but common) condition of impact during transportation. Subjective judgement is largely eliminated, and the data are treated statistically. Reference standard materials are used because slight differences in mechanical arrangements or properties of the apparatus components may affect absolute values of test results.

(4) Limitations --- This test is not applicable to substances in the solid state. Possible reactions with rubber components of apparatus may invalidate the test procedure for some liquids.

G. Flash point

(1) Test procedure - TAG apparatus and procedure as specified by DOT (currently ASTM D 53-46; soon ASTM D 56-70)

(2) Interpretation of results

a. Up to 26.7°C (80°F) --- Class I if test A gives result A(2)c, test B gives result B(2)a, or test C gives C(2)a. Class II otherwise.

b. 26.7°C (80°F) or above --- Class IV unless otherwise indicated by other tests.

(3) Rationale --- This is a standard test used by DOT, and hazard classification here is consistent with DOT practice for other materials.

(4) Limitations --- Flash point bench marks are not in accord with current UK recommendations on organic peroxides

H. Burning test (see paragraph 19)

(1) Test procedure --- reference 6

(2) Interpretation of results

a. Explosive burning (sound or flash) or maximum flame height above 5 feet --- Class II unless placed in Class I on the basis of other testing.

b. Other results --- no basis for classification

(3) Rationale --- a simple test, giving some idea of the material's ability to spread fire to the surroundings

(4) Limitations --- subjective data; uncontrolled variables in test procedure.

I. Thermal surge sensitivity (temperature required for explosion in 250μsec)
   (1) Test procedure --- reference 18; see paragraph 35.
   (2) Interpretation of results --- same as Test F.
   (3) Rationale - A test of likelihood of initiation of a destructive reaction by a pulse heat source such as flame, electrical short circuit, or spark. NOL has considerable experience with this test. Data are not subjective and are treated statistically.
   (4) Limitations --- This test is not widely used in the U. S., and, in Europe, only the Russians are using it. It is applicable only to liquids and to solids which melt without decomposition. Materials which react with the stainless steel tubing cannot be tested.

Tabulation of Recommended Hazard Classification System

Class A Explosive - detonation in regular card gap test at 70 or more cards (Test A)

Class B Explosive - detonation in regular card gap test at zero to 69 cards (Test A)

Class B Explosive:
- any one of these:
  - deformation of witness plate in regular card gap test (Test A)
  - orifice ≥ 9 mm in RVO/TNO PVT (Test B)
  - orifice ≥ 2 mm in BAM steel tube test (Test C)
- plus any one of these:
  - impact sensitivity greater than RDX (Test E)
  - impact sensitivity greater than 70% NG/30% DBP (Test F)
  - thermal surge sensitivity greater than 70% NG/30% DBP (Test I)

Class I - considerable damage to test oven in SADT (Test D)

Class I:
- any one of these:
  - deformation of witness plate in regular card gap test (Test A)
  - orifice ≥ 9 mm in RVO/TNO PVT (Test B)
  - orifice ≥ 2 mm in BAM steel tube test (Test C)
- plus any one of these:
  - impact sensitivity greater than m-dinitrobenzene (Test E)
  - impact sensitivity greater than 60% NG/40% DBP (Test F)
  - thermal surge sensitivity greater than 60% NG/40% DBP (Test I)
  - flash point up to 80°F (Test G)

Class II - flash point up to 80°F (Test G)

Class II - explosive burning or flame height above 5 feet in burning test (Test H)

Class II:
- any one of these:
  - orifice ≥ 5 mm in RVD/TNO PVT (Test B)
  - orifice ≥ 1 mm in BAM steel tube test (Test C)
  - considerable damage to container in SADT (Test D)
- plus any one of these:
  - impact sensitivity greater than RDX (Test E)
  - impact sensitivity greater than 70% NG/30% DBP (Test F)
  - thermal surge sensitivity greater than 70% NG/30% DBP (Test I)

Class III - impact sensitivity greater than RDX (Test E)

Class III - impact sensitivity greater than 70% NG/30% DBP (Test F)

Class III - thermal surge sensitivity greater than 70% NG/30% DBP (Test I)

Class III	any one of these	orifice 5 mm in RVO/TNO (Test B) orifice 1 mm in BAM steel tube (Test C) considerable damage to container in SADT (Test D)
	plus	impact sensitivity equal to or less than m-DNB (Test E)
	any one of these	impact sensitivity equal to or less than 60% NG/40% DBP (Test F) thermal surge sensitivity equal to or less than 60% NG/40% DBP (Test I)
Class IV		-all materials whose test results do not place them in above classes

Summarized Comparison of Other Organic Peroxide Classification Systems

Continental European

Class Ia - Explosives (not accepted unless specifically listed); may explode on contact with a flame; or are more sensitive to impact or friction than dinitrobenzene; or limiting orifice diameter ≥ 2.0 mm in BAM steel tube test or 9 mm in RVO/TNO PVT.

Class VII - Organic Peroxides, includes all those not classified as explosives on the basis of the tests above, grouped as follows:

Group A: must be packed in closed, leak-proof containers

Group B: containers must be fitted with pressure venting device

Group C: corrosive

Group D: acceptable in quantities not exceeding one kg per package (meet criteria for Class VII but are not specifically listed).

Group E: refrigerated shipping required (includes a number of materials which, on basis of above tests, would be classified as explosives).

No tests are specified for these groupings; presumably experience is the criterion.

UK

Category 1 - subject to control

Category 2 - highly inflammable: flash point below 23°C

Category 3 - corrosive: based on experience

Category 4 - explosion hazard: based on BAM steel tube or RVO/TNO PVT, as indicated above; also ballistic mortar tests

Category 5 - not subject to control

Category 6 - properties unknown

Reasons for selecting certain materials for category 5 rather than 1 are unclear

OPPSD

See Appendix A and remember that their PVT is a far less stringent test than the RVO/TNO PVT.

United Nations

No meaningful classification scheme

Bureau of Mines

No classification scheme.

V. RECOMMENDATIONS FOR FURTHER TEST METHOD DEVELOPMENT

49. To determine which organic peroxides must be shipped only in containers equipped with a venting device which allows reduction of excess pressure developed within the container (Group A), an estimate of gassing rates at storage temperatures is required. This can best be done by use of an isothermal (at temperatures slightly above anticipated maximum temperature in shipping) constant-volume system containing the organic peroxide and equipped for measurement of pressure increase as a function of time. Such a device is a Warburg apparatus or the Taliani test depicted by Boyars and Gough[85] or later improvements of those devices in which the mercury manometer is replaced by a strain gage. Further research is necessary to establish just how high a gassing rate can be tolerated without venting.

50. Further research is also required to develop a meaningful Card Gap Test for shock sensitivity of liquids. This would involve modifying the present ASTM test[26] by incorporating hollow glass spheres or sand particles in the liquid under test. Additionally, a meaningful test for shock sensitivity of liquids could be developed using a booster explosive of diameter substantially less than that of the tube containing the liquid under test.

51. The UK's ballistic mortar (ballistic pendulum) appears to be a useful device to supplement the card gap test; its use should be investigated further. An adiabatic self-heating test could probably be applied to give data equivalent to the SADT on a considerably smaller scale. A test to measure the build-up of electrostatic charge in containers of spark-sensitive materials would be useful to predict the likelihood of occurrence of electrostatic spark discharge. Some modification of the RVC/TNO PVT or the DAM steel tube test to permit obtaining useful data from samples wetted with water or volatile solvents would be desirable. A flame spreading test to measure rate of propagation of fire in the organic peroxide could be developed easily and would be worthwhile.

VI. ACKNOWLEDGEMENT

The tests of sensitivity to impact and thermal surge were performed by E. Kayser, and the card gap tests were carried out by A. R. Clairmont, Jr. under the direction of J. O. Erkman and Dr. D. Price. Appendix A includes material under Crown copyright; permission for its use has been obtained by the Department of Transportation. Appendix A also includes material furnished by the Organic Peroxide Producers Safety Division of the Society of the Plastics Industry, Inc. Appendix B includes a test description from a compilation by D. C. Hornig and a description of a circuit improvement by H. Cleaver. The RARDE reports were furnished through the courtesy of E. G. Whitbread, HM Chief Inspector of Explosives, Home Office.

VII. REFERENCES

1. International Convention Concerning the Carriage of Goods by Rail (CIM): Annex I -- International Regulations Concerning the Carriage of Dangerous Goods by Rail (RID), Her Majesty's Stationery Office, London (1968)

2. European Agreement Concerning the International Carriage of Dangerous Goods by Road (ADR): Annex A -- Provisions Concerning Dangerous Substances and Articles, Her Majesty's Stationery Office, London (1967)

3. R.A.R.D.E. Memorandum 21/70, "Organic Peroxides" Part I. Assessment of the Hazards of Organic Peroxides as Offered for Transport", V. J. Clancey, A. J. Owen, and A. J. Taylor, Royal Armament Research and Development Establishment, Explosives Division, Fort Halstead, Kent, August 1970.*

4. R.A.R.D.E. Memorandum (X) 18/63. "Tests Applied to Industrial Explosives: Part I. Summarized Descriptions of Tests", V. J. Clancey, Royal Armament Research and Development Establishment, Explosives Division, Fort Halstead, Kent, April 1963.*

5. Personal Communication from E. G. Whitbread, HM Chief Inspector of Explosives, Home Office, to Carl Boyars, NOL, 5 August 1971.

6. The Society of the Plastics Industry, Inc., Organic Peroxide Producers Safety Division "Relative Hazard Classification of Organic Peroxides (Tentative)", Revised 20 February 1970.

7. D. C. Noller et al., "A Relative Hazard Classification of Organic Peroxides", Industrial and Engineering Chemistry 56, 18 (1964).

8. "A Relative Hazard Classification of Commercial Organic Peroxides", Reprint 30.42, Lucidol Division, Pennwalt Corporation, Buffalo, New York.

9. Code of Federal Regulations, Title 49-Transportation, Parts 1 to 199, Revised as of January 1 1971, U. S. Government Printing Office, Washington, D. C.

10. TB 700-2, NAVORDINST 8020.3, TO 11A-1-47, DSAR 8220.1, Explosives Hazard Classification Procedures, Departments of the Army, the Navy, and the Air Force, and Defense Supply Agency, Washington, D. C., 19 May 1967, amended 22 January 1968

---

*Although unclassified and distributed widely outside the UK, these two references, which are issued by a military establishment, have restrictions on their distribution.

REFERENCES (Cont.)

11. United Nations, "Transport of Dangerous Goods (1970), Volume I", ST/ECA/81/Rev. 2, E/CN.2/Conf. 5/10/Rev. 2, 1 November 1970.

12. Department of Transportation Report No. TSA-20-72-2, by C. M. Mason and V. C. Cooper, Bureau of Mines (Pittsburgh Mining and Safety Research Center Report No. 4160, 10 March 1972).

13. American Society for Testing and Materials, "Standard Method ASTM D2540-70".

14. D. Levine and C. Boyars, Combustion and Flame, 9, 131 (1965).

15. D. Levine and C. Boyars, in "Advanced Propellant Chemistry", pp. 261-278; Advances in Chemistry Series 54, American Chemical Society, Washington, 1966.

16. C. Boyars and D. Levine, Pyrodynamics, 6, 53 (1968).

17. H. D. Mallory, U. S. Naval Ordnance Lab Report NAVORD 4236 (16 March 1956).

18. P. A. Kendall and J. M. Rosen, Rev. Sci. Inst., 39, 992 (1968).

19. D. Price, A. R. Clairmont, Jr., and J. O. Erkman, Combustion and Flame, 17, 323 (1971).

20. D. Price and I. Jaffe, AIAA J., 1, 389 (1963).

21. D. Price, I. Jaffe, and G. R. Roberson, "Current Calibration" in Ind. Chim. Belge, 1967, 32 (Spec. No.) pp. 506-510.

22. L. B. Seely, J. G. Berke, an .. W. Evans, AIAA Journal, 5, 2179 (1967).

23. D. Swern in "Epoxidation" in Encyclopedia of Polymer Science and Technology, Vol. 6, p. 94, John Wiley, New York.

24. T. Urbanski, "Chemistry and Technology of Explosives, Vol. 2", p. 164, Pergamon Press, 1965.

25. C. Boyars and W. G. Gough, Analytical Chemistry, 27, 957 (1955).

26. American Society for Testing and Materials, "Standard Method ASTM D2539-70".

APPENDIX A: EXTRACTS FROM REFERENCED MATERIAL ON HAZARD CLASSIFICATION SYSTEMS

Continental European Classification System (from ADR and RID)

Class Ia	Explosive substances and articles
Class Ib	Articles filled with explosive substances
Class Ic	Igniters, fireworks and similar goods
Class Id	Gases: compressed, liquefied or dissolved under pressure
Class Ie	Substances which give off inflammable gases on contact with water
Class II	Substances liable to spontaneous combustion
Class IIIa	Inflammable liquids
Class IIIb	Inflammable solids
Class IIIc	Oxidizing substances
Class IVa	Toxic substances
Class IVb	Radioactive substances
Class V	Corrosive substances
Class VI	Repugnant substances and substances liable to cause infection
Class VII	Organic peroxides

Organic Peroxides in Class Ia of ADR

(a) Benzoyl peroxide:
1. in the dry state with less than 10% water;
2. with less than 30% phlegmatizer.

Note 1. Benzoyl peroxide with not less than 10% water or with not less than 30% phlegmatizer is a substance of Class VII
Note 2. Benzoyl peroxide with not less than 70% dry and inert solids is not subject to the provisions of the ADR.

(b) Cyclohexanone peroxides [1-hydroxy-1'-hydroperoxy-dicyclohexyl peroxide and bis (1-hydroxycyclohexyl) peroxide and mixtures of these two compounds]:
1. in the dry state or with less than 5% water;
2. with less than 30% phlegmatizer.

Note 1. Cyclohexanone peroxides and their mixtures with no' less than 5% water or with not less than 30% phlegmatizer are substances of Class VII.
Note 2. Cyclohexanone peroxides and their mixtures with not less than 70% dry and inert solids are not subject to the provisions of the ADR.

(c) Parachlorobenzoyl peroxide:
1. in the dry state or with less than 10% water;
2. with less than 30% phlegmatizer.

Note 1. Parachlorobenzoyl peroxide with not less than 10% water or with not less than 30% phlegmatizer is a substance of Class VII.
Note 2. Parachlorobenzoyl peroxide with not less than 70% dry and inert solids is not subject to the provisions of the ADR.

Class VII Organic Peroxides of ADR

Note. Organic peroxides which may explode on contact with a flame or which are more sensitive to shock and to friction than dinitrobenzene are not to be accepted for carriage unless they are specifically listed in Class Ia.

Group A

1° Ditertiary butyl peroxide.

2° Tertiary butyl hydroperoxide with not less than 20% ditertiary butyl peroxide and not less than 20% phlegmatizer.

Note. Tertiary butyl hydroperoxide with not less than 20% ditertiary butyl peroxide but without phlegmatizer is listed under 31°.

3° Tertiary butyl peracetate with not less than 30% phlegmatizer.

4° Tertiary butyl perbenzoate.

5° Tertiary butyl permaleate with not less than 50% phlegmatizer.

6° Ditertiary butyl diperphthalate with not less than 50% phlegmatizer.

7° 2:2-bis(tertiary butyl peroxy) butane with not less than 50% phlegmatizer.

8° Benzoyl peroxide

(a) with not less than 10% water;

(b) with not less than 30% phlegmatizer.

Note 1. Benzoyl peroxide in the dry state or with less than 10% water or less than 30% phlegmatizer is a substance of Class Ia.
Note 2. Benzoyl peroxide containing not less than 70% dry and inert solids is not subject to the provisions of the ADR.

9° Cyclohexanone peroxides [1-hydroxy-1'-hydroperoxydicyclohexylperoxide and bis(1-hydroxycyclohexyl)peroxide and mixtures of these two compounds]:

(a) with not less than 5% water;

(b) with not less than 30% phlegmatizer.

Note 1. Cyclohexanone peroxides and their mixtures in the dry state or with less than 5% water or less than 30% phlegmatizer are substances of Class Ia.
Note 2. Cyclohexanone peroxides and their mixtures with a content of not less than 70% dry and inert solids are not subject to the provisions of the ADR.

10° α, α-Dimethylbenzyl hydroperoxide (cumyl hydroperoxide) with a peroxide content not exceeding 95%.

11° Dilauroyl peroxide.

12° 1,2,3,4-Tetrahydro-1-naphthyl hydroperoxide.

13° 2:4 dichlorobenzoyl peroxide:

(a) with not less than 10% water;

(b) with not less than 30% phlegmatizer,

14° p-Menthanyl hydroperoxide with a peroxide content not exceeding 95% (remainder: alcohols and ketones).

15° 2,6,6-trimethyl norpinanyle hydroperoxide (pinanyl hydroperoxide; pinane hydroperoxide) with a peroxide content not exceeding 95% (remainder: alcohols and ketones).

16° Di- α,α-dimethylbenzyl peroxide (dicumyl peroxide) with a peroxide content not exceeding 95%.

Note. Dicumyl peroxide containing 60% or more dry and inert solids is not subject to the provisions of the ADR.

17° Parachlorobenzoyl peroxide:

(a) with not less than 10% water;

(b) with not less than 30% phlegmatizer.

Note 1. Parachlorobenzoyl peroxide in the dry state or with less than 10% water or less than 30% phlegmatizer is a substance of Class Ia.
Note 2. Parachlorobenzoyl peroxide containing 70% or more dry and inert solids is not subject to the provisions of the ADR.

18° Di-isopropylbenzene hydroperoxide (isopropylcumyl hydroperoxide) with 45% of a mixture of alcohol and ketone.

19° 4-Methylpentan-2-one-peroxide (isobutylmethylketone peroxide) with not less than 40% phlegmatizer.

20° Tertiary butyl (α, α-dimethylbenzyl) peroxide (tertiary butyl cumyl peroxide) with not more than 95% peroxide.

21° Diacetyl peroxide with not less than 75% phlegmatizer.

22° Acetyl benzoyl peroxide with not less than 60% phlegmatizer.

Note ad 1° to 22°. Substances which are inert with regard to organic peroxides and have a flash-point not lower than 100°C and a boiling point not lower thar 150°C are deemed to be phlegmatizing substances. Substances of Group A may also be diluted with solvents which are inert with regard to these substances.

Group B

30° Butanone peroxide (ethyl methyl ketone peroxide):

(a) with not less than 50% phlegmatizer;

(b) in solutions containing not more than 12% of this peroxide in solvents which are inert with regard to it.

31° Tertiary butyl hydroperoxide:

(a) with not less than 20% tertiary butyl peroxide, without phlegmatizer;

(b) in solutions containing not more than 12% of this hydroperoxide in solvents which are inert with regard to it.

Note ad 30° and 31°. Substances which are inert with regard to organic peroxides and have a flash-point not lower than 100°C and a boiling point not lower than 150°C are deemed to be phlegmatizing substances.

Group C

35° Paracetic acid containing not more than 40% peracetic acid and not less than 45% acetic acid and not less than 10% water.

Note ad Groups A, B and C. Mixtures of the products listed in Groups A, B and C are to be accepted for carriage subject to the conditions laid down for Group C if they contain peracetic acid, and in other cases subject to the conditions laid down for Group B.

Group D

40° Samples of phlegmatized organic peroxides not listed in Groups A, B or C, or of their solutions, are to be accepted in quantities not exceeding 1 kg per package on condition that their stability in storage is at least equal to that of the substances listed in Groups A and B.

Group E

Note. Group E comprises organic peroxides which decompose easily at normal temperatures and which must therefore be carried only under conditions of adequate refrigeration. Although of an explosive nature as defined by the note on Class VII, a few organic peroxides are included in Group E because they can be safely carried in a refrigerated state and in order to avoid any confusion regarding their handling.

45° Dioctanoyl peroxide (dicaprylyl peroxide) of technical purity.

46° Acetyl cyclohexane sulphonyl peroxide:

(a) containing not less than 30% water;

(b) in solution with not less than 80% solvent.

47° Diisopropyl peroxydicarbonate:

(a) of technical purity;

(b) in solution with not less than 50% phlegmatizer or solvent.

48° Dipropionyl peroxide in solution with not less than 75% solvent.

49° Tertiary butyl perpivalate:

(a) of technical purity:

(b) in solution with not less than 25% phlegmatizer or solvent.

50° Bis-(3,5,5-trimethylhexanoyl)peroxide in solution with not less than 20% phlegmatizer.

51° Dipelargonyl peroxide of technical purity.

52° Tertiary butyl per 2-ethylhexanoate of technical purity.

Note 1. Substances which are inert with regard to organic peroxides and have a flash-point not lower than 100°C are deemed to be phlegmatizing substances.
Note 2. The solvents referred to are substances which are inert with regard to organic peroxides and which also satisfy one of the following conditions:

(a) they are not inflammable and have a boiling point of not less than 85°C; or

(b) they are not inflammable and have a boiling point of less than 85°C but not less than 60°C, in which case hermetically closed containers must be used; or

(c) they have a flash point of not less than 21°C and a boiling point of not less than 85°C; or

(d) they have a flash point of less than 21°C but not less than 60°C, in which case hermetically closed containers must be used.

Group F

55° Empty packagings, uncleaned, and empty tanks, uncleaned, which have contained substances of Class VII.

OPPSD Relative Hazard Classification of Organic Peroxides (Tentative)

(Revised Feb. 20, 1970)

The OPPSD approved tests have been used to indicate the damage potential and susceptibility of a product to decompose:

Damage Potential	Susceptibility
PVT	Impact
Trauzl	Burning Test (Flame Height)
Rapid Heat (Type of Decomposition)	Flash Point
SADT (Type of Decomposition)	SADT (Temperature)

Results for each test are divided into three hazard ratings:

M	Maximum Hazard
I	Intermediate Hazard
L	Low Hazard

In each category (Damage Potential or Susceptibility) the highest rating from each applicable test determines the rating of that category. The combination of ratings of the two categories determines the final classification of the product.

The classes are:

Class I	Damage Potential and Susceptibility categories are both maximum hazards.
Class II	One category, either Damage Potential or Susceptibility, is maximum hazard. The other category is either intermediate or low hazard.
Class III	Damage Potential and Susceptibility categories are both intermediate hazards.
Class IV	One category, either Damage Potential or Susceptibility, is intermediate hazard. The other category is low hazard.
Class V	Damage Potential and Susceptibility categories are both low hazards.

SUMMARY TABLE OF CLASS DEFINITION

Class	Damage Potential	Susceptibility
I	M	M
II	M	I or L
	I or L	M
III	I	I
IV	I	L
	L	I
V	L	L

PROPOSED LIMITS

Damage Potential Tests

PVT	M	20 - 14
	I	<14 - 1.0
	L	<1.0
Trauzl	M	60 - 35
	I	<35 - 15
	L	<15
Rapid Heat (Type of Decomposition)	M	Rapid Decomposition
	I	Moderate Decomposition
	L	Mild Decomposition

PROPOSED LIMITS (Cont.)

Damage Potential Tests

SADT (Type of Decomposition)	M	Rapid Decomposition (Considerable damage to test oven)
	I	Moderate Decomposition (Considerable damage to container and possible slight damage to test oven)
	L	Mild Decomposition (No damage to oven and some or no damage to container)

Susceptibility Tests

Impact[1]	M	<4"
	I	4" - 10"
	L	>10"
Burning Test (Flame Height)	M[2]	<5 feet
	I	5 - 3 feet
	L	>3 feet
Flash Point (For liquids only)	M	<20°F.
	I	20° - 80°F.
	L	>80°F.
SADT (Temperature)	M	<50°F.
	I	50° - 120°F.
	L	>120°F.

(1) This is based on Bureau of Explosives' Impact Tester for solids and pastes. Liquid peroxides with shock sensitivity of less than 10" are not classified under this system.

(2) If a product burns explosively or almost explosively, it is given maximum hazard rating even if the flame height is less than 5 feet.

APPENDIX B: NOL/ERL IMPACT TEST DESCRIPTION

Test Apparatus and Procedure as of 1966

Apparatus

The machine used is based on the design developed during World War II by the Explosives Research Laboratory of the National Defense Research Committee located at Bruceton, Pa. It is often referred to as an "ERL machine" or a "Bruceton machine". An assembly drawing Figure B-1 depicts the principal features of the test apparatus.

Essentially, the apparatus consists of a free-falling weight, tooling to hold the explosive sample and a supporting frame. The falling weight is made of hardened steel. Several weights are available (2, 2.5, and 5 kg); the weight usually used is 2.5 kg. By means of a hand windlass the drop weight can be positioned at any desired height above the test sample, to a maximum of 320 cm. An electromagnet retains the drop weight until released by the operator.

The drop weight impacts against a "striker" pin which transmits the force to the test sample. The striker is 1.250 in. in diameter by 3.500 in. long, made of tool steel hardened to 60-63 Rockwell "C" scale. The flat surface next to the explosive is ground to a finish of 16 μin.

The explosive sample rests without restraint on a 1-in.-square piece of 5/0 grade, flint sandpaper. The sandpaper, in turn, rests without restraint on an anvil 1.250 in. in diameter by 1.250 in. long, made according to the following specifications: tool steel hardened to 60 Rockwell "C", all surfaces ground and polished.

The anvil is mounted in a tool holder assembly which is rigidly bolted to the machine base. The striker slides freely within a guide. A number of variations in tooling design have been tried. The one described here, in standard use for about 20 years, is designated as "Type 12" tools.

Instrumentation

A ceramic-type microphone, Astatic Model JT-30C, is mounted in the horizontal plane of the anvil face at a distance of 34 in. from the center of the anvil.

The signal from the microphone is fed to a variable-gain amplifier which triggers (or fails to trigger) a thyratron tube, Model 2050. Triggering the thyratron lights a neon lamp mounted on the operator's instrument panel.

A Burlington Model 431 millivolt meter is placed in the circuitry for adjustment of the gain setting and the thyratron cathode voltage.

The complete instrumentation is commonly designated as a "noisemeter".

Pretest Procedure

The test explosives are solid, granular materials which are either pure compounds or mixtures. Materials which are normally cast-loaded into a weapon are prepared for the test by casting as a thin sheet (weight from 3 to 10 g depending on material availability and number of determinations to be made). The cast sheet is gently ground by hand in a wooden mortar and the material screened through a set of No. 16, 30, and 50 U. S. standard sieves. Equal weights of material retained on the No. 30 and No. 50 sieves are carefully blended on a Fisher-Kendall mixer (simultaneous tumbling and stirring action) to furnish the test samples.

Other solid, granular materials are tested "as received" without further pretest processing.

Each test sample consists of 35 ± 2 mg of explosive placed in a loose pile in the center of the sandpaper. The first few samples are weighed on a laboratory balance; the remainder are volumetrically loaded by use of a small scoop which, when used by an experienced operator, measures the quantity of explosive within the desired tolerance.

In setting up the noisemeter for operation, the following adjustments are made at the start of each day of testing:

a. The millivolt meter is calibrated across a 100-ohm resistor by adjusting the setting to 50 millivolts.

b. The amplifier gain is initially adjusted to read 25 millivolts. Final adjustment is determined by means of two test switches which make the thyratron tube alternately conductive and nonconductive. When proper gain setting has been achieved, the neon lamp will glow every time the thyratron is energized as demonstrated by 10 or more consecutive tests.

At least once each week the apparatus is calibrated for proper elimination of background noise. Instrumentation is adjusted as described in a and b above. The drop weight is released from maximum height to impact on the test anvil. Under these conditions the neon lamp must not glow.

Test Procedure

A test sample (explosive on sandpaper) is placed in the center of the anvil. The striker is lowered gently so that it rests on the top of the explosive pile.

The drop weight is elevated to a preselected height. Selection of the height used for the first drop is a matter of judgment. If the sensitiveness of the test material has been previously measured, the first drop height will be chosen in the range where "fires" have occurred. If the material is of completely unknown sensitivity an arbitrary starting height is used based on the sensitivity of similar compositions or the sensitivity which would be predicted from molecular structure.

The weight is dropped and the result is indicated by the noisemeter. If the neon lamp glows it is a "fire"; if not, the test is a "no-fire". The weight is caught by a sliding stop moved into position by the operator after initial rebound from contact with the striker. This prevents multiple impacts between weight and striker.

After the first fire is obtained (which may take 3 or 4 preliminary drops with an unknown material) successive drop heights are governed by the results of the previous drop according to the following procedure. The weight is dropped from a height lower than the previous one by 0.093 log unit (where the log of a 10 cm drop is taken as 1.0). If the result is a fire, the next drop is 0.093 log unit lower; if no-fire the next drop is 0.093 log unit higher. Testing continues by this "up and down" procedure for a total of 25 drops (usually called a "run").

After each drop, the test sample is discarded and a fresh sample used for the next drop. The striker and anvil faces which are in contact with the test sample are cleaned with solvent (such as acetone) after each test.

Striker and anvil are replaced when working surfaces become roughened as determined by making carbon paper impressions of the surfaces. Old tools are refinished and reused. The striker is replaced when its height has diminished by 0.250 in.

Results Reported and Criteria for Evaluation

The data recorded for each test are the log of the height from which the weight was dropped and the decision as to whether the drop resulted in a fire or a no-fire.

The data are treated by a procedure * developed by the Applied Mathematics Panel of the National Defense Research Committee (AMP Report No. 101.1R SRG-P No. 40). First, the data are examined to determine whether more fires or no-fires occurred. Whichever is the lower number is selected for analysis and the balance of the data are discarded. (If the numbers are equal, either may be used.) The data are summarized, statistically, by use of the following table (numbers are inserted in the columns for illustration only):

log	i	n_i	in_i	i^2n_i
1.7	0	2	0	0
1.8	1	10	10	10
1.9	2	10	20	40

The log of a given drop height is entered in the first column. These are arranged in ascending order, starting with the lowest for which a test is recorded as indicated in the example above. In the next column, "i" is a consecutive number corresponding to the number of equal increments above the base, or "zero", line. The next column, "n_i", tabulates the number of fires (or no-fires) which occurred at i_0, i_1, i_2, etc. The other columns are computations of i times n_i and i^2 times n_i.

A mean is computed from the formula:

$$m = c + d\left[\frac{A}{N} \pm \frac{1}{2}\right]$$

where $N = \Sigma n_i$

$A = \Sigma i n_i$

c = normalized height of the lowest line (i_0),

and d = normalized interval between drops (0.093).

In the formula, the sign inside the parentheses is (+) if no-fires are used and (-) if fires are used.

The mean computed in accordance with the paragraphs above is reported as the "50% point". It represents a 50% probability of fire. The number may be reported in log units as determined directly from the computation. More often, the antilog is found and this is reported as a height in centimeters.

*This procedure is also described in Dixon, W. J. and Massey, F. J., Jr., "Introduction to Statistical Analysis", McGraw-Hill, 1951, pp 278-286.

Often, the standard deviation is also estimated by the following technique: A number, "M", is computed from the formula:

$$M = \frac{\Sigma i^2 n_i}{N} - \left[\frac{\Sigma i n_i}{N}\right]^2$$

Using a table or graph appearing in the Applied Mathematics Panel report mentioned on page B-4(top), a value "s" is obtained. The standard deviation (σ) is then:

$$\sigma = ds$$

It is always expressed in log units.

The table below sets out typical test results for 8 common explosives.

Explosive	50% Point cm	σ
Lead azide	4	0.12
PETN	12	0.13
RDX	24	0.11
HMX	26	0.10
Tetryl	38	0.07
Comp B	60	0.13
TNT	157	0.10
Explosive D	254	0.05

Harry Cleaver's Noise Level Indicator Circuit Modification (1970)

Introduction

The noise level indicator circuit used with the drop-weight tester for solids as a go/no-go test uses a microphone as the noise detector and gives a visual indication when the noise from an impact test is above a selected reference level. The experimentally determined noise reference level is set above the maximum mechanical noise level generated in a drop with an additional level equivalent to a no-go added on. Maximum mechanical noise can be determined by dropping the weight from the top of the tester onto an unloaded sample assembly.

The solid state circuit herein described replaces a malfunctioning vacuum tube circuit used for many years. This circuit offers advantages in simplicity, safety, and maintenance over the old design.

Operation

The block diagram (Figure B-2) shows the system now in operation. Noise from the drop-weight tester is picked up by the microphone, amplified and applied to a voltage comparator. The variable threshhold voltage is set to the equivalent noise reference level between a no-go and a go. When the noise signal applied to the comparator goes above the reference level, the silicon-controlled rectifier (SCR) is triggered and the indicator light goes on.

An optional listen-in circuit employing a Heathkit AA-18 amplifier has been built and installed. Personnel in another area control this circuit; it is used to monitor activity in the drop tester room so that any personal injury requiring assistance will not be undetected.

Circuit Description

Figure B-3 shows the circuit schematic for the noise level indicator circuit. A single integrated circuit, a Motorola MC1437L dual operational amplifier, contains the input amplifier and voltage comparator. Circuits of this type are discussed in Handbook of Operational Amplifier Applications, Burr Brown Research Corp.

The input amplifier has a fixed gain of about 240. It amplifies signals from the microphone and applies the signal to the comparator and to the Heathkit power amplifier via the output connector.

Input connections on the voltage comparator were selected so that the output voltage of the comparator is at the negative saturation level in the steady state. When the input signal on pin 5 exceeds the reference level, the output voltage of the comparator will then swing positive as required to trigger the SCR. Output voltage swing of the comparator is from -14.1 to +14.1 volts.

The reference voltage level applied to pin 6 is obtained from a resistance voltage divider connected to the negative supply voltage. Range of the 1-turn pot is from zero to -5.15 volts.

Output voltage of the comparator is divided down by the 8K and 2K ohm resistors to a level suitable for the SCR gate trigger. The 1N34 diode protects the SCR's gate when the comparator's output voltage is negative.

Once triggered, the SCR latches on and must be manually turned off by the RESET/TEST switch in order to turn off the lamp. When the switch is pressed closed, it short circuits the SCR. Current through the SCR drops below the holding value and the SCR recovers its forward blocking state. When the switch is released, the lamp will then go off. The RC network across the switch terminals prevents electrical noise generated by the switch bounce from false triggering the SCR.

The RESET/TEST switch can be used at any time to test the lamp's operation. When the lamp is off, pressing the switch will turn it on as long as the switch remains closed. Releasing the switch will turn off the lamp. Since the 28 volt lamp is operated at 15 volts, it has a very extended lifetime and should not require replacement.

Power for the circuits is furnished by a commercially-available dual output DC supply manufactured by Computer Products of Fort Lauderdale, Florida. At the time of installation, the supply voltages measured +15.22 and -15.25 volts after a half hour warmup. Specifications for the supply include line and load regulation of $\pm$.02% and a temperature coefficient of 0.02% per degree C.

When the circuit described was first applied it exhibited an overly sensitive response. The threshold voltage level on the comparator could not be set high enough to keep the circuit from triggering on noise from a no-go. Since the range and sensitivity of the comparator are determined by the voltage divider containing one resistor and a pot, the situation was easily corrected by changing the resistor. Voltage developed across the 1-turn pot was increased, and the circuit now covers a wider range of noise levels with less sensitivity. The maximum threshold voltage which the integrated circuit will tolerate is equal to the supply voltage (-15 volts). Sensitivity, or resolution, can be increased without affecting the range by replacing the 1-turn pot with a 10-turn pot of the same value.

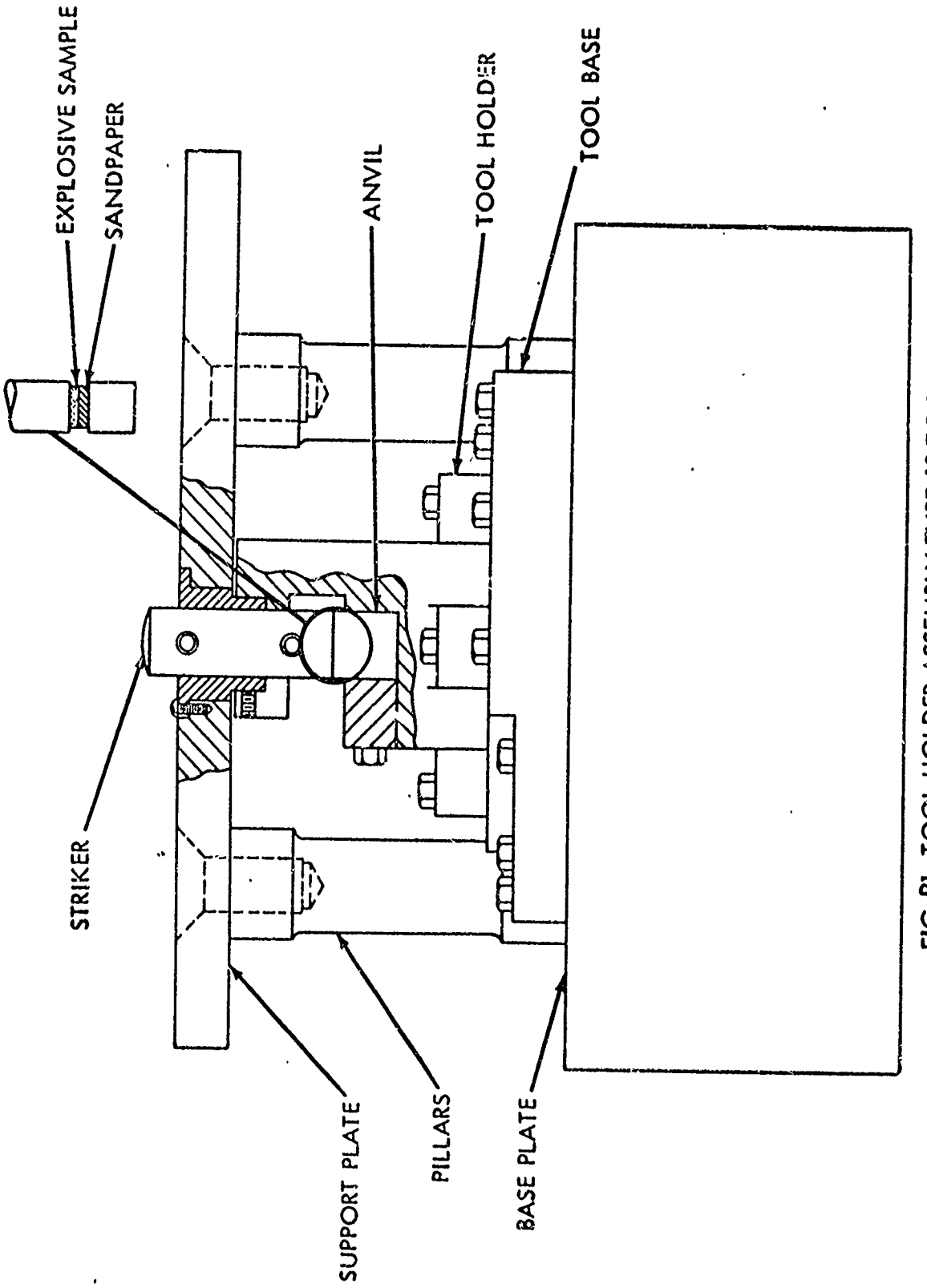

FIG. B1 TOOL HOLDER ASSEMBLY TYPE 12 TOOLS

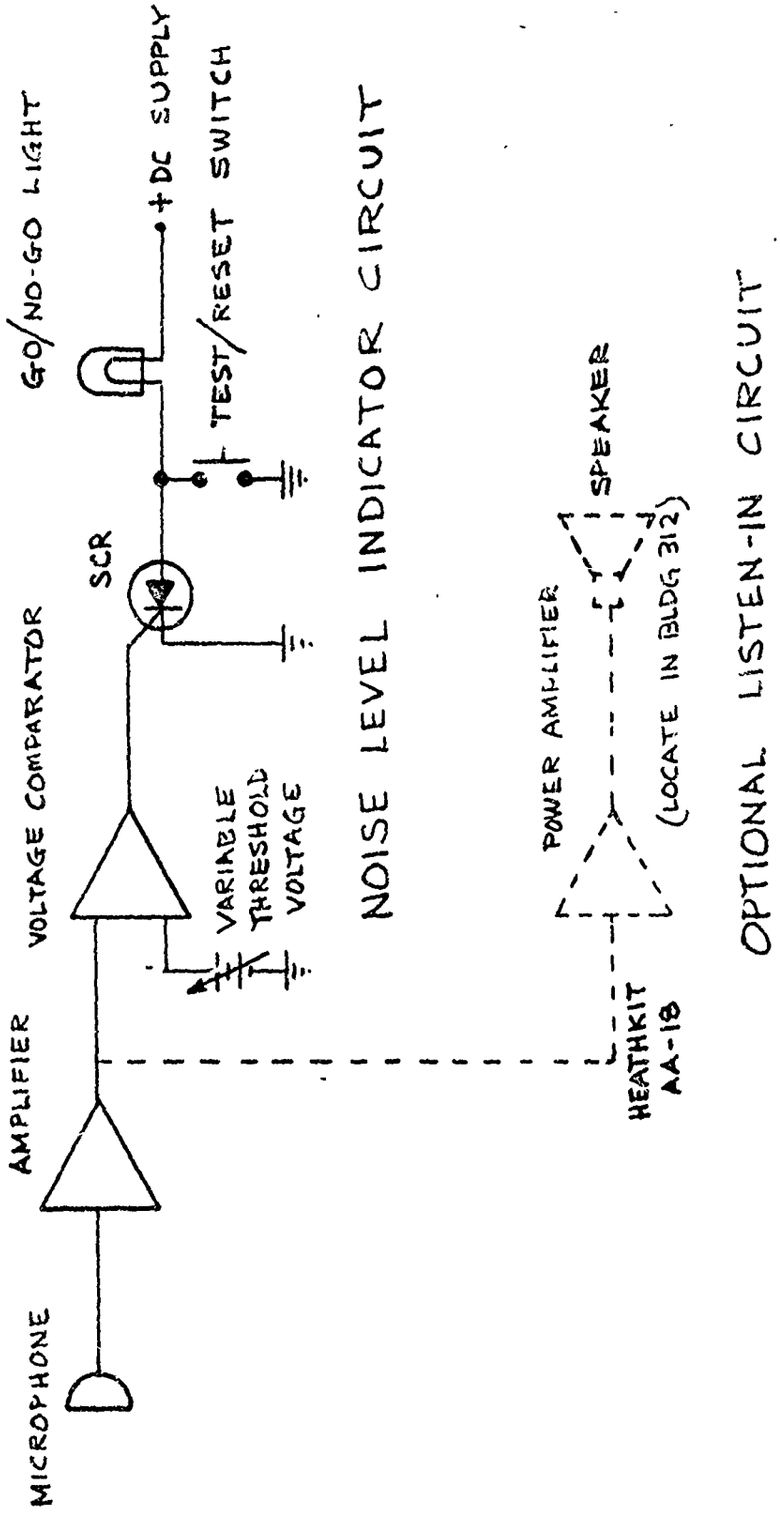

CLEAVER NOV 7, '69

FIG. B2

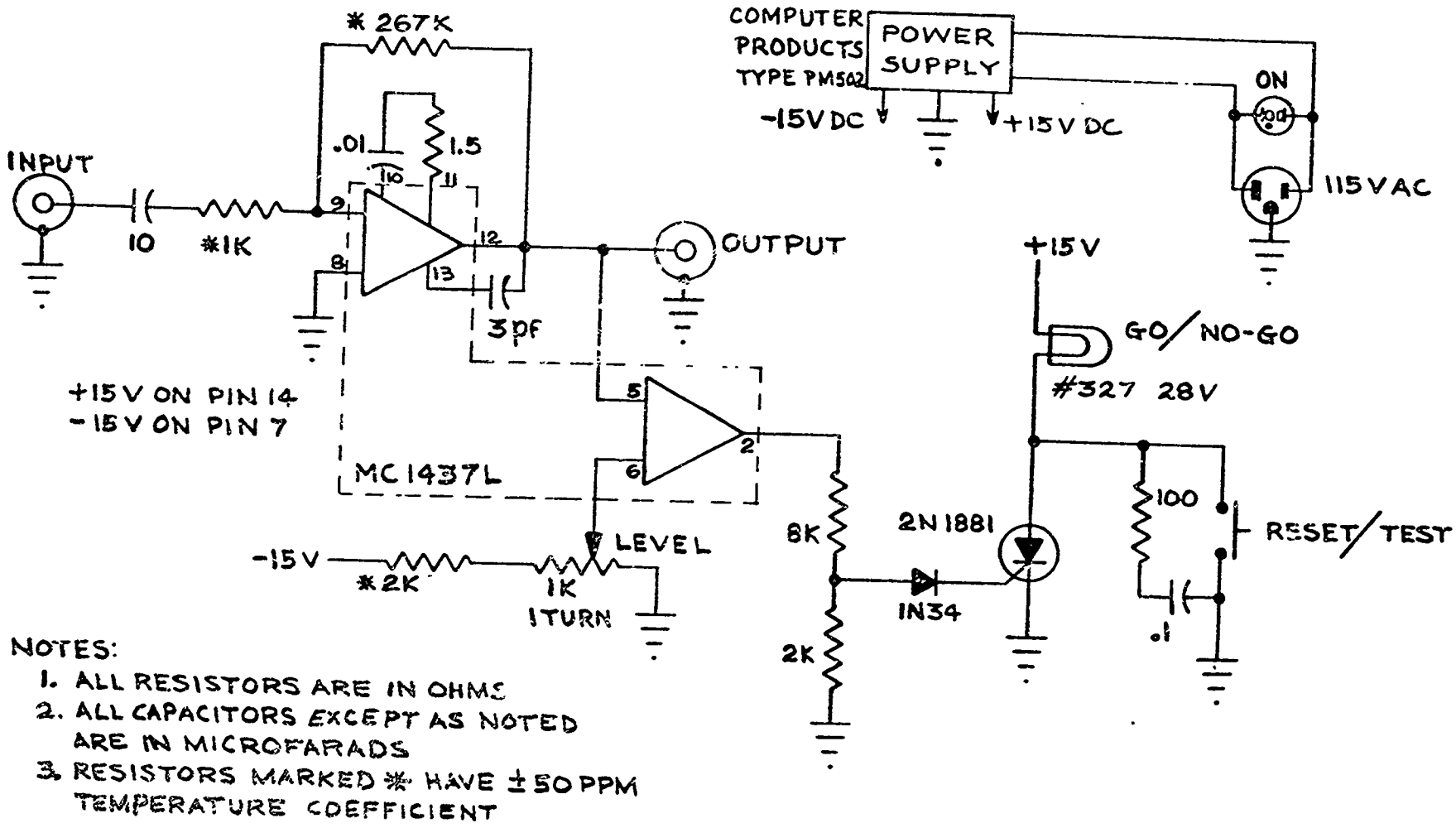

NOTES:

1. ALL RESISTORS ARE IN OHMS
2. ALL CAPACITORS EXCEPT AS NOTED ARE IN MICROFARADS
3. RESISTORS MARKED * HAVE ±50 PPM TEMPERATURE COEFFICIENT

CLEAVER 23 MAR 70

NOISE LEVEL INDICATOR CIRCUIT SCHEMATIC

FIG. B3

APPENDIX C: EXPLOSION HAZARD

For better understanding (in the case of a reader not familiar with the phenomena involved in explosions), the discussion in paragraph 2 is supplemented with the following definitions from reference (10).

Deflagration. A rapid chemical reaction in which the output of heat is sufficient to enable the reaction to proceed and be accelerated without input of heat from another source. Deflagration is a surface phenomenon with the reaction products flowing away from the unreacted material along the surface. Confinement increases pressure, rate of reaction and temperature. The final effect of deflagration under confinement is explosion.

Detonation. A violent chemical reaction within a chemical compound or mechanical mixture evolving heat and high pressures. A detonation, in contradistinction to deflagration, is the reaction which proceeds through the reacted material toward the unreacted material at a high constant velocity. The velocity of the reaction is supersonic. The result of the chemical reaction is exertion of extremely high pressures on the surrounding medium forming a pressure wave (blast wave) which propagates away from the source at supersonic velocities. A detonation, when the material is located on or near the surface of the ground, is normally characterized by a crater.

Explosion. A chemical reaction of any chemical compound or mechanical mixture which, when subjected to heat, friction, shock, or other suitable initiation, undergoes a very rapid combustion or decomposition releasing large volumes of highly-heated gases which exert pressures on the surrounding medium. Also, a mechanical reaction in which failure of the container causes the sudden release of pressure from within a pressure vessel, for example, pressure rupture of a steam boiler. Depending on the rate of energy release, an explosion can be categorized as a deflagration, a detonation or pressure rupture.

Fragmentation. The breaking up of the confining material of a chemical compound or mechanical mixture when an explosion takes place. A deflagration usually reduces the confining material into large pieces which are projected at low velocities whereas a detonation reduces the confining material into small pieces which are projected at high velocities. Also, complete items, subassemblies or pieces thereof as well as pieces of equipment or buildings containing the items.